AUTHENTICATED U.S. GOVERNMENT INFORMATION GPO

Federal Register

10–17–00 Tuesday
Vol. 65 No. 201 Oct. 17, 2000
Pages 61255–62274

The **FEDERAL REGISTER** is published daily, Monday through Friday, except official holidays, by the Office of the Federal Register, National Archives and Records Administration, Washington, DC 20408, under the Federal Register Act (44 U.S.C. Ch. 15) and the regulations of the Administrative Committee of the Federal Register (1 CFR Ch. I). The Superintendent of Documents, U.S. Government Printing Office, Washington, DC 20402 is the exclusive distributor of the official edition.

The **Federal Register** provides a uniform system for making available to the public regulations and legal notices issued by Federal agencies. These include Presidential proclamations and Executive Orders, Federal agency documents having general applicability and legal effect, documents required to be published by act of Congress, and other Federal agency documents of public interest.

Documents are on file for public inspection in the Office of the Federal Register the day before they are published, unless the issuing agency requests earlier filing. For a list of documents currently on file for public inspection, see http://www.nara.gov/fedreg.

The seal of the National Archives and Records Administration authenticates the Federal Register as the official serial publication established under the Federal Register Act. Under 44 U.S.C. 1507, the contents of the **Federal Register** shall be judicially noticed.

The **Federal Register** is published in paper and on 24x microfiche. It is also available online at no charge as one of the databases on GPO Access, a service of the U.S. Government Printing Office.

The online edition of the **Federal Register** is issued under the authority of the Administrative Committee of the Federal Register as the official legal equivalent of the paper and microfiche editions (44 U.S.C. 4101 and 1 CFR 5.10). It is updated by 6 a.m. each day the **Federal Register** is published and it includes both text and graphics from Volume 59, Number 1 (January 2, 1994) forward.

GPO Access users can choose to retrieve online **Federal Register** documents as TEXT (ASCII text, graphics omitted), PDF (Adobe Portable Document Format, including full text and all graphics), or SUMMARY (abbreviated text) files. Users should carefully check retrieved material to ensure that documents were properly downloaded.

On the World Wide Web, connect to the **Federal Register** at http://www.access.gpo.gov/nara. Those without World Wide Web access can also connect with a local WAIS client, by Telnet to swais.access.gpo.gov, or by dialing (202) 512-1661 with a computer and modem. When using Telnet or modem, type swais, then log in as guest with no password.

For more information about GPO Access, contact the GPO Access User Support Team by E-mail at gpoaccess@gpo.gov; by fax at (202) 512–1262; or call (202) 512–1530 or 1–888–293–6498 (toll free) between 7 a.m. and 5 p.m. Eastern time, Monday–Friday, except Federal holidays.

The annual subscription price for the **Federal Register** paper edition is $638, or $697 for a combined **Federal Register,** Federal Register Index and List of CFR Sections Affected (LSA) subscription; the microfiche edition of the **Federal Register** including the Federal Register Index and LSA is $253. Six month subscriptions are available for one-half the annual rate. The charge for individual copies in paper form is $9.00 for each issue, or $9.00 for each group of pages as actually bound; or $2.00 for each issue in microfiche form. All prices include regular domestic postage and handling. International customers please add 25% for foreign handling. Remit check or money order, made payable to the Superintendent of Documents, or charge to your GPO Deposit Account, VISA, MasterCard or Discover. Mail to: New Orders, Superintendent of Documents, P.O. Box 371954, Pittsburgh, PA 15250–7954.

There are no restrictions on the republication of material appearing in the **Federal Register.**

How To Cite This Publication: Use the volume number and the page number. Example: 65 FR 12345.

SUBSCRIPTIONS AND COPIES

PUBLIC	
Subscriptions:	
Paper or fiche	**202–512–1800**
Assistance with public subscriptions	**512–1806**
General online information	**202–512–1530; 1–888–293–6498**
Single copies/back copies:	
Paper or fiche	**512–1800**
Assistance with public single copies	**512–1803**
FEDERAL AGENCIES	
Subscriptions:	
Paper or fiche	**523–5243**
Assistance with Federal agency subscriptions	**523–5243**

FEDERAL REGISTER WORKSHOP

THE FEDERAL REGISTER: WHAT IT IS AND HOW TO USE IT

FOR: Any person who uses the Federal Register and Code of Federal Regulations.

WHO: Sponsored by the Office of the Federal Register.

WHAT: Free public briefings (approximately 3 hours) to present:

1. The regulatory process, with a focus on the Federal Register system and the public's role in the development of regulations.
2. The relationship between the Federal Register and Code of Federal Regulations.
3. The important elements of typical Federal Register documents.
4. An introduction to the finding aids of the FR/CFR system.

WHY: To provide the public with access to information necessary to research Federal agency regulations which directly affect them. There will be no discussion of specific agency regulations.

WASHINGTON, DC

WHEN: November 14, 2000, at 9:00 a.m.

WHERE: Office of the Federal Register
Conference Room
800 North Capitol Street, NW.
Washington, DC
(3 blocks north of Union Station Metro)

RESERVATIONS: 202–523–4538

Printed on recycled paper.

Contents

Federal Register

Vol. 65, No. 201

Tuesday, October 17, 2000

Agricultural Research Service
NOTICES
Patent licenses; non-exclusive, exclusive, or partially exclusive:
California Table Grape Commission, 61300–61301

Agriculture Department
See Agricultural Research Service
See Animal and Plant Health Inspection Service
See Forest Service
See Natural Resources Conservation Service
NOTICES
Committees; establishment, renewal, termination, etc.:
National Agricultural Research, Extension, Education, and Economics Advisory Board, 61300

Alcohol, Tobacco and Firearms Bureau
NOTICES
Agency information collection activities:
Proposed collection; comment request, 61374–61379

Animal and Plant Health Inspection Service
NOTICES
Reports and guidance documents; availability, etc.:
Solid wood packing materials importation into U.S.; pest risk assessment, 61301

Arts and Humanities, National Foundation
See National Foundation on the Arts and the Humanities

Census Bureau
NOTICES
Reports and guidance documents; availability, etc.:
Monthly Product Announcement (report series); change from print publication to Internet access, 61303

Centers for Disease Control and Prevention
NOTICES
Meetings:
Public Health Service Activities and Research at DOE Sites Citizens Advisory Committee, 61338

Children and Families Administration
NOTICES
Agency information collection activities:
Submission for OMB review; common request, 61339

Civil Rights Commission
NOTICES
Meetings; State advisory committees:
Florida, 61303

Commerce Department
See Census Bureau
See International Trade Administration
See National Oceanic and Atmospheric Administration
See Patent and Trademark Office

Committee for the Implementation of Textile Agreements
NOTICES
Cotton, wool, and man-made textiles:
Bahrain, 61309–61310
Korea, 61310–61311
Romania, 61311
Thailand, 61311–61312

Consumer Product Safety Commission
NOTICES
Meetings; Sunshine Act, 61312

Defense Department
NOTICES
Agency information collection activities:
Submission for OMB review; comment request, 61312

Education Department
NOTICES
Agency information collection activities:
Submission for OMB review; comment request, 61312–61314

Energy Department
See Federal Energy Regulatory Commission
NOTICES
Agency information collection activities:
Submission for OMB review; comment request, 61314
Meetings:
Environmental Management Site-Specific Advisory Board—
Rocky Flats, CO, 61314–61315

Environmental Protection Agency
RULES
Air pollution; standards of performance for new stationary sources:
Testing and monitoring provisions; amendments, 61743–62273
Pesticides; tolerances in food, animal feeds, and raw agricultural commodities:
Azoxystrobin, 61270–61278
NOTICES
Reports and guidance documents; availability, etc.:
Agricultural sources of nonpoint pollution; management; comment request, 61325–61326
Toxic and hazardous substances control:
New chemicals—
Receipt and status information, 61326–61329

Executive Office of the President
See Presidential Documents

Federal Aviation Administration
RULES
Airworthiness directives:
Aerotechnik s.r.o., 61262–61264
PROPOSED RULES
Airworthiness directives:
Boeing, 61289–61292
Dornier, 61287–61289

Federal Communications Commission
PROPOSED RULES
Digital television stations; table of assignments:
Texas, 61299

NOTICES
Agency information collection activities:
Submission for OMB review; comment request, 61329–61330
Common carrier services:
Federal-State Joint Board on Universal Service—
Rural carriers; universal service reform; Rural Task Force recommendation; comment request, 61330–61331
Wireless telecommunications services—
800 MHz specialized mobile radio service licenses auction; lower 80 channels, 61331–61333
Meetings; Sunshine Act, 61333
Rulemaking proceedings; petitions filed, granted, denied, etc., 61333

Federal Emergency Management Agency
RULES
Flood insurance; communities eligible for sale:
Various States, 61278–61282

Federal Energy Regulatory Commission
NOTICES
Electric rate and corporate regulation filings:
ISO New England, Inc., et al., 61319–61321
Mid-Atlantic Energy Development Co., et al., 61321–61322
West Texas Utilities Co., et al., 61323–61325
Applications, hearings, determinations, etc.:
Allegheny Energy Supply, 61315
California Municipal Utilities Association, 61315
CAlifornians for Renewable Energy, Inc., 61315–61316
Colorado Interstate Gas Co., 61316–61317
Columbia Gas Transmission Corp., 61317
MDU Resources Group, Inc., 61317–61318
Morgan Stanley Capital Group Inc., 61318
Quinnipiac Energy, LLC, 61318
Reliant Energy Coolwater, LLC, et al., 61318–61319
Southern Energy Delta, L.L.C., et al., 61319

Federal Highway Administration
NOTICES
Environmental statements; notice of intent:
Missoula, MT, 61369–61370

Federal Reserve System
NOTICES
Banks and bank holding companies:
Change in bank control, 61334
Formations, acquisitions, and mergers; correction, 61334
Meetings; Sunshine Act, 61334

Federal Trade Commission
NOTICES
Agency information collection activities:
Proposed collection; comment request, 61334–61336
Prohibited trade practices:
Weider Nutrition International, Inc., 61337

Fish and Wildlife Service
NOTICES
Endangered and threatened species:
Recovery plans—
Red-cockaded woodpecker, 61355
Reports and guidance documents; availability, etc.:
National Wildlife Refuge System; ecological integrity maintenance; policy, 61356–61362

Food and Drug Administration
NOTICES
Agency information collection activities:
Submission for OMB review; comment request, 61339–61340
Meetings:
Pharmaceutical Science Advisory Committee, 61340–61341

Forest Service
NOTICES
Appealable decisions; legal notice:
Northern Region, 61302
National Forest System:
Projects and activities; notice, comment, and appeal procedures; terms of settlement agreement between Forest Service and Heartwood, Inc., 61302

Health and Human Services Department
See Centers for Disease Control and Prevention
See Children and Families Administration
See Food and Drug Administration
See National Institutes of Health
See Public Health Service
NOTICES
Meetings:
National Bioethics Advisory Commission, 61338

Housing and Urban Development Department
NOTICES
Agency information collection activities:
Proposed collection; comment request, 61354–61355

Immigration and Naturalization Service
RULES
Immigration:
Public use forms; duplication and electronic generation, 61259–61260

Interior Department
See Fish and Wildlife Service
See Land Management Bureau
See National Park Service
See Surface Mining Reclamation and Enforcement Office

Internal Revenue Service
RULES
Income taxes:
Earned income credit eligibility determination; paid preparer due diligence requirements, 61268–61270
PROPOSED RULES
Income taxes, etc.:
Information reporting requirements—
Payments made on behalf of another person, payments to joint payees, and payments of gross proceeds from sales involving investment advisers, 61292–61299

International Trade Administration
NOTICES
Antidumping:
Foundry coke products from—
China, 61303–61305
Meetings:
Information Technology (IT) Management Planning Tool; introduction to U.S. IT suppliers, 61305–61306

Justice Department
See Immigration and Naturalization Service

Labor Department
See Mine Safety and Health Administration
NOTICES
Agency information collection activities:
Submission for OMB review; comment request, 61364

Land Management Bureau
NOTICES
Coal leases, exploration licenses, etc.:
Montana, 61362

Mine Safety and Health Administration
RULES
Coal mine and metal and nonmetal mine safety and health:
Occupational noise exposure—
Health standards; correction, 61270

National Credit Union Administration
NOTICES
Meetings; Sunshine Act, 61364–61365

National Foundation on the Arts and the Humanities
NOTICES
Meetings:
Leadership Initiatives Advisory Panel, 61365

National Institutes of Health
NOTICES
Agency information collection activities:
Proposed collection; comment request, 61341–61343
Inventions, Government-owned; availability for licensing, 61343–61345
Meetings:
National Center for Research Resources, 61345
National Human Genome Research Institute, 61345–61346
National Institute of Child Health and Human Development, 61347–61348
National Institute of Mental Health, 61346
National Institute of Neurological Disorders and Stroke, 61346–61347
National Institute on Alcohol Abuse and Alcoholism, 61346
National Library of Medicine, 61348
Scientific Review Center, 61348–61352
Patent licenses; non-exclusive, exclusive, or partially exclusive:
Amylin Pharmaceuticals, Inc., 61352

National Oceanic and Atmospheric Administration
RULES
Fishery conservation and management:
Alaska; fisheries of Exclusive Economic Zone—
Vessel monitoring system, 61264–61267
NOTICES
Permits:
Marine mammals, 61306

National Park Service
NOTICES
Environmental statements; availability, etc.:
Lower St. Croix National Scenic Riverway, MN and WI, 61362–61363
National Underground Railroad Network to Freedom Act; implementation:
Underground Railroad Network to Freedom; official symbol designation, 61363

National Science Foundation
NOTICES
Antarctic Conservation Act of 1978; permit applications, etc., 61365

Natural Resources Conservation Service
NOTICES
Field office technical guides; changes:
Indiana, 61302–61303

Nuclear Regulatory Commission
PROPOSED RULES
Financial protection requirements and indemnity agreements:
Extraordinary nuclear occurrence criteria; withdrawn, plus rulemaking petition denied, 61283–61287
NOTICES
Meetings; Sunshine Act, 61367
Reports and guidance documents; availability, etc.:
Waste burial charges; low-level waste burial facilities; decommissioning waste disposal costs; changes, 61367
Applications, hearings, determinations, etc.:
Florida Power & Light Co., 61365–61366

Patent and Trademark Office
NOTICES
Hague Conference on Private International Law; jurisdiction and foreign judgments in civil and commercial matters; convention; comment request, 61306–61309

Presidential Documents
PROCLAMATIONS
Special observances
Navy submarine force; 100th anniversary (Proc. 7363), 61257–61258
U.S.S. Cole; death of servicemembers aboard (Proc. 7362), 61255

Public Health Service
See Centers for Disease Control and Prevention
See Food and Drug Administration
See National Institutes of Health
NOTICES
Meetings:
National Toxicology Program—
Scientific Counselors Board, 61352–61354

Research and Special Programs Administration
NOTICES
Hazardous materials; preemption determinations:
Louisiana standards; ATOFINA Chemicals, Inc., 61370–61373

Securities and Exchange Commission
NOTICES
Self-regulatory organizations; proposed rule changes:
Municipal securities rulemaking board, 61367–61369

State Justice Institute
NOTICES
Meetings; Sunshine Act, 61369

Surface Mining Reclamation and Enforcement Office
NOTICES
Agency information collection activities:
Proposed collection; comment request, 61363–61364

Surface Transportation Board
NOTICES
Railroad operation, acquisition, construction, etc.:
New York Central Lines LLC et al., 61373–61374

Textile Agreements Implementation Committee
See Committee for the Implementation of Textile Agreements

Thrift Supervision Office
RULES
Practice and procedure in adjudicatory proceedings:
Civil monetary penalties; inflation adjustment, 61260–61262

Transportation Department
See Federal Aviation Administration
See Federal Highway Administration
See Research and Special Programs Administration
See Surface Transportation Board

Treasury Department
See Alcohol, Tobacco and Firearms Bureau
See Internal Revenue Service
See Thrift Supervision Office

Veterans Affairs Department
NOTICES
Agency information collection activities:
Proposed collection; comment request, 61379–61380
Submission for OMB review; comment request, 61380–61382
Meetings:
Women Veterans Advisory Committee, 61382

Separate Parts In This Issue

Part II
Environmental Protection Agency, 61743–62273

Reader Aids
Consult the Reader Aids section at the end of this issue for phone numbers, online resources, finding aids, reminders, and notice of recently enacted public laws.

CFR PARTS AFFECTED IN THIS ISSUE

A cumulative list of the parts affected this month can be found in the Reader Aids section at the end of this issue.

3 CFR

Proclamations:

7362.....61255
7363.....61257

8 CFR

299.....61259

10 CFR

Proposed Rules:

140.....61283

12 CFR

509.....61260
510.....61260

14 CFR

39.....61262

Proposed Rules:

39 (2 documents) 61287, 61289

15 CFR

902.....61264

26 CFR

1.....61268
602.....61268

Proposed Rules:

1.....61292
5f.....61292
31.....61292

30 CFR

56.....61270
57.....61270
62.....61270
70.....61270
71.....61270

40 CFR

60.....61744
61.....61744
63.....61744
180.....61270

44 CFR

64 (2 documents) 61278, 61280

47 CFR

Proposed Rules:

73.....61299

50 CFR

679.....61264

Federal Register
Vol. 65, No. 201
Tuesday, October 17, 2000

Presidential Documents

Title 3—

The President

Proclamation 7362 of October 12, 2000

Death of American Servicemembers Aboard the United States Ship Cole

By the President of the United States of America

A Proclamation

As a mark of respect for those who died on the United States Ship COLE, I hereby order, by the authority vested in me as President of the United States by the Constitution and the laws of the United States of America, that the flag of the United States shall be flown at half-staff upon all public buildings and grounds, at all military posts and naval stations, and on all naval vessels of the Federal Government in the District of Columbia and throughout the United States and its Territories and possessions until sunset, Monday, October 16, 2000. I also direct that the flag shall be flown at half-staff for the same length of time at all United States embassies, legations, consular offices, and other facilities abroad, including all military facilities and naval vessels and stations.

IN WITNESS WHEREOF, I have hereunto set my hand this twelfth day of October, in the year of our Lord two thousand, and of the Independence of the United States of America the two hundred and twenty-fifth.

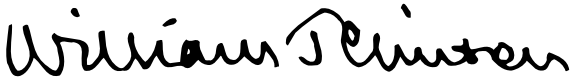

[FR Doc. 00–26770
Filed 10–16–00; 8:45 am]
Billing code 3195–01–P

Presidential Documents

Proclamation 7363 of October 12, 2000

100th Anniversary of the U.S. Navy Submarine Force, 2000

By the President of the United States of America

A Proclamation

On October 12, 1900, the United States Navy commissioned its first submarine, the U.S.S. *Holland*. Few people realized that this vessel would be the first in a long line of innovative and technically sophisticated ships that would launch a new era in our national defense.

Although early-20th century submarines were small, cramped, and somewhat limited in use, a few visionary American naval leaders recognized their great potential as both offensive and defensive weapons. By the end of World War I, American submarines were patrolling our Nation's coasts and supporting Allied efforts to keep the sea lanes open along the European coast and around the British Isles. In the 1930s, thanks to the determination of submarine force leaders and notable improvements by ship designers and builders, U.S. submarines evolved into a powerful offensive force, equipped with enough fuel, food, and weapons to sustain long-range, independent, open-sea patrols.

In 1941, when Imperial Japanese forces destroyed much of the U.S. battle fleet in the surprise attack on Pearl Harbor, the U.S. Navy Submarine Force stepped into the breach and played a pivotal role in winning the war in the Pacific. With submerged attacks during daylight hours and surface attacks at night, U.S. submarines inflicted a devastating toll on the Japanese Imperial Navy and merchant marine. By war's end, our submarine force had sunk 30 percent of the enemy's naval force and 60 percent of their merchant ships. But this impressive victory came at a heavy price: the submarine force suffered the highest casualty rate of any component of the U.S. Armed Services. Of the 16,000 Americans who served in submarines during the war, more than 3,500 gave their lives.

As the Cold War dawned, the U.S. Submarine Force once again helped to turn the tide of history, this time by deterring war. In 1954, under the leadership of Admiral Hyman G. Rickover, nuclear power was introduced to the fleet on the U.S.S. *Nautilus*. Together with advances in hull design, silencing techniques, and sonic detection, nuclear power dramatically improved the speed, stealth, and range of U.S. submarines. By the 1960s, when ballistic missiles were successfully launched from submerged submarines, the U.S. Navy Submarine Force helped protect the Free World from Soviet aggression by conducting reconnaissance missions and by ensuring that the United States could retaliate effectively against any nuclear attack from the Soviet Union or its allies.

The end of the Cold War, however, did not bring an end to the challenges facing our submarine force, as the outbreak of regional disturbances replaced the threat of all-out nuclear conflict. Modern submarines, with their ability to remain submerged for long periods of time, excel at gathering timely and accurate information about potential trouble spots around the globe. Should the need arise, our submarine force can also exercise powerful offensive capabilities, as it did during Operation Desert Storm in Kuwait and Iraq and Operation Allied Force in Kosovo. Today's submariners continue to build on a proud tradition of service by protecting U.S. interests, defending

our freedom and that of our allies, and helping to shape a more peaceful world in the 21st century.

NOW, THEREFORE, I, WILLIAM J. CLINTON, President of the United States of America, by virtue of the authority vested in me by the Constitution and laws of the United States, do hereby proclaim October 12, 2000, as the 100th Anniversary of the U.S. Navy Submarine Force. I call upon all Americans to observe this centennial celebration with appropriate programs, ceremonies, and activities in honor of those patriots, past and present, who have played a part in the rich history of the U.S. Navy Submarine Force—from ship designers and builders to logisticians and support personnel to submarine crews and their families—and in tribute to those who gave their lives for our freedom. Because of the vision, dedication, courage, and selflessness of generations of these brave Americans, the United States today has a submarine force second to none, whose unprecedented contributions to intelligence, deterrence, and offensive military capability will continue to serve as a strong pillar of our Nation's security in the years to come.

IN WITNESS WHEREOF, I have hereunto set my hand this twelfth day of October, in the year of our Lord two thousand, and of the Independence of the United States of America the two hundred and twenty-fifth.

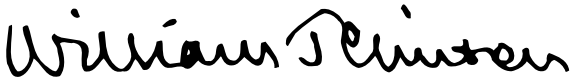

[FR Doc. 00–26771
Filed 10–16–00; 8:45 am]
Billing code 3195–01–P

Rules and Regulations

Federal Register
Vol. 65, No. 201
Tuesday, October 17, 2000

This section of the FEDERAL REGISTER contains regulatory documents having general applicability and legal effect, most of which are keyed to and codified in the Code of Federal Regulations, which is published under 50 titles pursuant to 44 U.S.C. 1510.

The Code of Federal Regulations is sold by the Superintendent of Documents. Prices of new books are listed in the first FEDERAL REGISTER issue of each week.

DEPARTMENT OF JUSTICE

Immigration and Naturalization Service

8 CFR Part 299

[INS No. 2017–99]

RIN 1115–AF66

Duplication and Electronic Generation of Forms

AGENCY: Immigration and Naturalization Service, Justice.

ACTION: Final rule.

SUMMARY: This rule amends the Immigration and Naturalization Service (Service) regulations regarding duplication and electronic generation of public use forms by public and private entities. This rule eliminates the requirement that duplicated and electronically generated forms be produced on the same color paper and in the same printing configuration that is used for the official Service forms. This rule also removes the requirement that duplicated and electronically generated copies of forms made by public and private entities be submitted for Service review and approval. The Service is eliminating these requirements to make it easier for public and private entities to take advantage of existing technology in the marketplace and on the Service's Internet Website.

DATES: This final rule is effective October 17, 2000.

FOR FURTHER INFORMATION CONTACT: Ann Palmer, Adjudications Officer, Immigration Services Division, Immigration and Naturalization Service, 800 K Street, NW., 10th Floor, Techworld Plaza, Washington, DC 20001; telephone (202) 514–6442.

SUPPLEMENTARY INFORMATION:

Why Does the Service Accept Duplicated and Electronically Generated Forms?

The Service developed standards for accepting electronically generated forms to make it easier for public and private entities to take advantage of the automated technology available in the marketplace to reproduce certain immigration and naturalization forms.

On May 17, 1994, the Service published an interim rule in the **Federal Register** at 59 FR 25555 providing the standards for acceptance of duplicated and electronically generated forms. On September 11, 1996, the Service published a final rule in the **Federal Register** at 61 FR 47799, formally adopting these standards.

What Requirements for Acceptance of Duplicated and Electronically Generated Forms Is the Service Removing?

Currently, the standard for acceptance of duplicated and electronically generated forms include the requirements that public or private entities reproduce the forms on: (1) The same color paper; and (2) in the same printing configuration that is used for the official Service forms. Printing configuration means only whether a multi-page form is printed head-to-head or head-to-foot. The Service is removing these two requirements. In addition, the Service is removing the requirement that duplicated and electronically generated public use forms produced by public and private entities be submitted to the Director, Policy Directives and Instructions Branch (HQPDI) for approval.

Why Is the Service Removing These Requirements?

Acceptance of duplicated and electronically generated forms by the Service was intended to be a benefit to the public. The requirements that duplicated and electronically generated forms must be reproduced on the same color paper and in the same printing configuration as the official form was for administrative convenience of the Service in sorting different forms. Unfortunately, the color paper used for some of the official forms is no readily available in the marketplace, and some of the printing configurations of the official forms are difficult to reproduce with standard electronic printers. As a result, it has been difficult for some public and private entities to comply with the standard for acceptance of duplicated and electronically generated forms. This is particularly true for public and private entities that wish to generate forms now available on the Service's Internet Website. Therefore, the Service is eliminating these two requirements to make the use of electronically generated forms more convenient.

In addition, having the Director, HQPDI approve the final form has caused unnecessary delays for public and private entities wishing to duplicate or electronically generate public use forms. As long as public and private entities follow the standards contained in § 299.4, there is not need to submit samples to the Director, HQPDI for approval.

What Changes Is the Service Making to the Regulations?

In § 299.4, paragraphs (a)(2) and (b)(1) are being amended to remove the requirements that private entities electronically generating certain immigration forms reproduce the forms on the same color paper and in the same printing configuration as the official forms. In § 299.4, paragraph (b)(3) is being removed.

Good Cause Exception

The Service's implementation of this rule as a final rule without first publishing a proposed rule is based on the ''good cause'' exceptions found at 5 U.S.C. 553(b)(B), (d)(1) and (d)(3). The reasons and the necessity for issuing a final rule without prior notice and comment are as follows: This rule removes a restriction and provides a benefit to the public by allowing them to take advantage of existing technology available in the marketplace and on the Service's Internet Website to electronically reproduce certain immigration and naturalization forms. Therefore, issuing this rule as a proposed rule with request for comments would delay implementation and would be unnecessary and contrary to the public interest.

Regulatory Flexibility Act

The Commissioner of the Immigration and Naturalization Service, in accordance with the Regulatory Flexibility Act (5 U.S.C. 605(b)), has reviewed this regulation and, by

approving it, certifies that this rule will not have a significant economic impact on a substantial number of small entities. This rule is primarily administrative in nature and is intended to benefit small entities and private individuals by simplifying the requirements that, if followed, would enable them to take advantage of the technology available in the marketplace and on the Service's Internet Website to electronically generate certain immigration and naturalization forms. The number of small entities affected by this rule will not be substantial.

Unfunded Mandates Reform Act of 1995

This rule will not result in the expenditure by State, local and tribal governments, in the aggregate, or by the private sector, of $100 million or more in any 1-year, and it will not significantly or uniquely effect small governments. Therefore, no actions were deemed necessary under the provisions of the Unfunded Mandates Reform Act of 1995.

Small Business Regulatory Enforcement Fairness Act of 1996

This rule is not a major rule as defined by section 804 of the Small Business Regulatory Enforcement Act of 1996. This rule will not result in an annual effect on the economy of $100 million or more; a major increase in costs or prices; or significant adverse effects on competition, employment, investment, productivity, innovation, or on the ability of United States-based companies to compete with foreign-based companies in domestic and export markets.

Executive Order 12866

This rule is not considered by the Department of Justice, Immigration and Naturalization Service, to be a ''significant regulatory action'' under Executive Order 12866, section 3(f), Regulatory Planning and Review, and the Office of Management and Budget has waived its review process under section 6(a)(3)(A).

Executive Order 13132

This regulation will not have substantial direct effects on the States, on the relationship between the National Government and the States, or on the distribution of power and responsibilities among the various levels of government. Therefore, in accordance with section 6 of Executive Order 13132, it is determined that this rule does not have sufficient federalism implications to warrant the preparation of a federalism summary impact statement.

Executive Order 12988 Civil Justice Reform

This rule meets the applicable standards set forth in sections 3(a) and 3(b)(2) of Executive Order 12988.

List of Subjects in 8 CFR Part 299

Immigration, Reporting and recordkeeping requirements.

Accordingly, part 299 of chapter I of title 8 of the Code of Federal Regulations is amended as follows:

PART 299—IMMIGRATION FORMS

1. The authority citation for part 299 continues to read as follows:

Authority: 8 U.S.C. 1101, 1103; 8 CFR part 2.

2. Section 299.4, is amended by:

a. Revising paragraph (a)(2)(iv);

b. Revising the seventh sentence in paragraph (b)(1);

c. Removing paragraph (b)(3);

d. Revising the phrase ''Room 5307'' to ''Room 4034'' in paragraph (e).

The revisions read as follows:

§ 299.4 Reproduction of Public Use Forms by public and private entities.

(a) * * *

(2) * * *

(iv) Paper specifications (White, standard copier or typing paper).

(b) * * *

(1) * * * An electronic reproduction of a multi page form does not need to match the head-to-head or head-to-foot printing configuration of the official form. * * *

* * * * *

Dated: October 4, 2000.

Doris Meissner,

Commissioner, Immigration and Naturalization Services.

[FR Doc. 00–26621 Filed 10–16–00; 8:45 am]

BILLING CODE 4410–10–M

DEPARTMENT OF THE TREASURY

Office of Thrift Supervision

12 CFR Parts 509 and 510

[Docket No. 2000–89]

RIN 1550–AB41

Rules of Practice and Procedure for Adjudicatory Proceedings; Civil Money Penalty Inflation Adjustment

AGENCY: Office of Thrift Supervision, Treasury.

ACTION: Final rule.

SUMMARY: The Federal Civil Monetary Penalty Inflation Adjustment Act of 1990 requires all federal agencies with statutory authority to impose civil money penalties (CMPs) to evaluate and adjust those CMPs every four years. OTS last adjusted its CMP statutes in 1996. Consequently, OTS is issuing this final rule to implement the required adjustments to its CMP statutes. OTS is also moving its chart displaying adjusted CMPs to the part containing OTS's procedural rules for adjudicatory proceedings.

EFFECTIVE DATE: October 17, 2000.

FOR FURTHER INFORMATION CONTACT: Timothy P. Leary, Counsel (Banking & Finance), (202) 906–7170, Regulations and Legislation Division, Office of the Chief Counsel, Office of Thrift Supervision, 1700 G Street, NW., Washington, DC 20552.

SUPPLEMENTARY INFORMATION:

I. Background

The Federal Civil Monetary Penalties Inflation Adjustment Act of 1990 [1] (FCMPIAA) requires each agency to make inflationary adjustments to the CMPs in statutes that it administers. [2] Under the FCMPIAA, agencies must make those adjustments at least once every four years. OTS last adjusted its CMPs in 1996. [3] An increased CMP applies only to violations that occur after the increase takes effect.

While the CMP statutes of many agencies provide for minimum and maximum penalty amount, all of OTS's CMP statutes provide only for a daily maximum amount. Today's rule therefore refers only to maximum CMPs. Today's increases in maximum CMPs may not necessarily affect the amount of any CMP that OTS may seek for a particular violation. OTS calculates each CMP on a case-by-case basis based upon a variety of factors (including the gravity of the violation, whether the violation was willful or recurring, and any harm to the depository institution). As a result, the maximums merely serve as a cap.

Under the statute, the agency determines the inflation adjustment by increasing the maximum CMP by a ''cost-of-living'' adjustment. The ''cost-of-living'' adjustment is the percentage by which the Consumer Price Index (CPI) for the month of June of the calendar year preceding the adjustment exceeds the CPI for the month of June

[1] 28 U.S.C. 2461 note.

[2] Some of OTS's CMPs are in a commonly administered statute, 12 U.S.C. 1818. Each agency that administers this statute is making identical adjustments.

[3] 12 CFR 510.6; 61 FR 56118 (October 31, 1996).

of the calendar year in which the amount of the CMP was last set or adjusted. OTS must use the CPI for All Urban Consumers (CPI–U) published by the Department of Labor.

The statute contains specific rules for rounding any increase based on the size of the CMP. Agencies do not have discretion in choosing whether to adjust a maximum CMP, how much to adjust a maximum CMP, or the methods used to determine the adjustment.

II. Summary of Calculation

To explain the inflation adjustment calculation for CMP amounts that were last adjusted in 1996, we will use the following example. Under 12 U.S.C. 1818(i), as adjusted under 12 CFR 510.6, OTS may impose a daily maximum third-tier CMP not to exceed $1,100,000 for violations of certain banking laws.

First, we determine the appropriate CPI–Us. The statute requires OTS to use the CPI–U for June of the calendar year preceding the year of adjustment. Here, because we are adjusting CMPs in 2000, we use the CPI–U for June 1999, which was 166.2. We must also determine the CPI–U for June of the year the CMP was last set by law or adjusted for inflation. Because OTS last adjusted the CMPs under 12 U.S.C. 1818 in 1996, we use the CPI–U for June 1996, which was 156.7.

Second, we calculate the cost of living adjustment or inflation factor. To do this, we divide the CPI–U for June 1999 (166.2) by the CPI–U for June 1996 (156.7). Our result is 1.061 (*i.e.,* a 6.1 percent increase).

Third, we calculate the raw inflation adjustment. To do this, we multiply the maximum penalty amounts by the inflation factor. In our example, $1,100,000 multiplied by the inflation factor of 1.061 equals $1,167,100.

Fourth, we round the raw inflation amounts according to the rounding rules in section 5(a) of the FCMPIAA. Since we round only the increased amount, we calculate the increased amount by the subtracting the current maximum penalty amounts from the raw maximum inflation adjustments. Accordingly, the increased amount for the maximum penalty in our example is $67,100 (*i.e.,* $1,167,100 less $1,100,000). Under the rounding rules, if the penalty is greater than $200,000, we round the increase to the nearest multiple of $25,000. Therefore, the maximum penalty increase for our example is $75,000.

Fifth, we add the rounded increase to the maximum penalty amount last set or adjusted. In our example, $1,100,000 plus $75,000 yields a maximum inflation adjusted penalty amount of $1,175,000.[4] Today's chart also corrects minor errors in our earlier rule. The chart accompanying the 1996 adjustment misstated the amount of the CMP under 12 U.S.C. 1467a(i)(3) for violations of the Holding Company Act. The correct CMP in section 1467a(i)(3) is $25,000, not $5,000. The 1996 rule should have adjusted this $25,000 amount to $27,500. That figure is unchanged by today's computation. We have also added new references to two CMPs that were inadvertently omitted from the 1996 chart. These include CMPs under section 1467a (i)(2) (authorizing a CMP of $25,000, which has been adjusted to $27,500) and 12 U.S.C. 1884 (authorizing a CMP of $100, which has been adjusted to $110).

Finally, we have moved the CMP inflation adjustment regulation from 12 CFR Part 510 (Miscellaneous Organizational Regulations) to 12 CFR Part 509 (Rules of Practice and Procedure in Adjudicatory Proceedings). This relocation should make the chart easier to find.[5]

[4] Three CMPs are subject to a slightly different treatment because the statutorily mandated computation and the rounding rules did not result in any adjustment in 1996. This affects the $2,000 penalties under 12 U.S.C. 1464(v)(4) and 1467a(r)(1), and the $350 penalty under 42 U.S.C. 4012a(f). Under the statute, we must use the CPI–U for June of the year when the penalty was ''last set or adjusted.'' Because these penalties were not adjusted in 1996, we must use the CPI–U for year in which the CMP was last set by an enactment. The statute also limits the amount of the first adjustment to a maximum 10 percent increase

The CMPs in sections 1464(v)(4) and 1467a(r)(1) were enacted as part of the Financial Institutions Reforms, Recovery, and Enforcement Act of 1989. Pub. L. No. 101–73, 103 Stat. 183 (August 9, 1989). The CPI–U for June 1989 was 124.1. Dividing the CPI–U for June 1999 (166.2) by 124.1 yields 1.3392. This factor applied to the $2,000 CMP yields $2,678, an increased penalty of $678. Under the rounding rules, this increase must be rounded to the nearest $1,000. Because this is the first time we have adjusted these CMPs, however, our adjustment cannot exceed 10% of the original CMP. Accordingly, we have increased the CMPs in sections 1464(v)(4) and 1467a(r)(1) by 10%, resulting in new CMPs of $2,200.

The $350 penalty in 42 U.S.C. 4012a(f) was enacted in the Riegle Community Development and Regulatory Improvement Act of 1994. Pub. L. No. 103–325, 108 Stat. 2160 (September 23, 1994). The CPI–U for June 1994 was 148.0. Dividing the CPI–U for June 1999 (166.2) by 148.0 yields 1.1229. This factor applied to the $350 CMP yields $393, an increased penalty of $43. Under the rounding rules, this increase must be rounded to the nearest multiple of $100. Because the nearest multiple of $100 is zero, there is no adjustment.

[5] The other federal banking agencies include their CMP inflation adjustment regulations in their rules of practice and procedure. *See* 12 CFR 19.240 (Office of the Comptroller of the Currency); 12 CFR 263.65 (Federal Reserve); 12 CFR 308.116 and 308.132 (Federal Deposit Insurance Corporation); 12 CFR 747.1001 (National Credit Union Administration).

III. Need for an Immediately Effective Final Rule

To issue a final rule without public notice and comment, an agency must find good cause that notice and comment are impracticable, unnecessary, or contrary to the public interest.[6] To issue a rule that is immediately effective, the agency must also find good cause for dispensing with the 30-day delay required by the Administrative Procedure Act.[7] Moreover, section 302 of the Riegle Community Development and Regulatory Improvement Act of 1994[8] states that a final rule imposing new requirements must take effect on the first day of a calendar quarter following its publication. That section provides, however, that an agency may determine that the rule should take effect earlier upon a finding of good cause.

Under the statute, agencies must make the required CMP inflation adjustments: (1) According to the very specific formula in the statute; and (2) within four years of the last inflation adjustment, or by October 31, 2000. Agencies have no discretion as to the amount or timing of the adjustment. The regulation is ministerial, technical, and noncontroversial. Accordingly, OTS believes that notice and comment are unnecessary. For these same reasons, OTS believes that there is good cause to make this rule effective immediately upon publication.

IV. Regulatory Flexibility Act

An initial regulatory flexibility analysis under the Regulatory Flexibility Act (RFA) is required only when an agency must publish a general notice of proposed rulemaking.[9] As already noted, OTS has determined that publication of a notice of proposed rulemaking is not necessary for this final rule. Accordingly, the RFA does not require an initial regulatory flexibility analysis. Nevertheless, OTS has considered the likely impact of the rule on small entities and believes that the rule will not have a significant impact on a substantial number of small entities.

V. Executive Order 12866

OTS has determined that this final rule does not constitute a ''significant regulatory action'' for purposes of Executive Order 12866.

[6] 5 U.S.C. 553(b).

[7] *id.*

[8] 12 U.S.C. 4802.

[9] 5 U.S.C. 603.

VI. Unfunded Mandates Act of 1995

OTS had determined that the final rule will not result in expenditures by state, local, or tribal governments or by the private sector of $100 million or more. Accordingly, this rulemaking is not subject to section 202 of the Unfunded Mandates Act.

List of Subjects

12 CFR Part 509

Administrative practice and procedure, Penalties.

12 CFR Part 510

Administrative practice and procedure.

Accordingly, OTS amends chapter V, title 12, Code of Federal Regulations as set forth below:

PART 509—RULES OF PRACTICE AND PROCEDURE IN ADJUDICATORY PROCEEDINGS

1. The authority citation for part 509 is revised to read as follows:

Authority: 5 U.S.C. 504, 554–557; 12 U.S.C. 1464, 1467, 1467a, 1468, 1817(j), 1818, 3349, 4717; 15 U.S.C. 78(l), 78o–5, 78u–2; 28 U.S.C. 2461 note; 31 U.S.C. 5321; 42 U.S.C. 4012a.

2. In § 509.103, add paragraph (c) to read as follows:

§ 509.103 Civil money penalties.

* * * * *

(c) *Inflation adjustment.* Under the Federal Civil Monetary Penalties Inflation Adjustment Act of 1990 (28 U.S.C. 2461 note), OTS must adjust for inflation the civil monetary penalties in statutes that it administers. The following chart displays the adjusted civil money penalties. The amounts in this chart apply to violations that occur after October 17, 2000:

U.S. Code citation	CMP description	New maximum amount
12 U.S.C. 1464(v)(4)	Reports of Condition—1st Tier	$2,200
12 U.S.C. 1464(v)(5)	Reports of Condition—2nd Tier	22,000
12 U.S.C. 1464(v)(6)	Reports of Condition—3rd Tier	1,175,000
12 U.S.C. 1467(d)	Refusal to Cooperate in Exam	5,500
12 U.S.C. 1467a(i)(2)	Holding Company Act Violation	27,500
12 U.S.C. 1467a(i)(3)	Holding Company Act Violation	27,500
12 U.S.C. 1467a(r)(1)	Late/Inaccurate Reports—1st Tier	2,200
12 U.S.C. 1467a(r)(2)	Late/Inaccurate Reports—2nd Tier	22,000
12 U.S.C. 1467a(r)(3)	Late/Inaccurate Reports—3rd Tier	1,175,000
12 U.S.C. 1817(j)(16)(A)	Change in Control—1st Tier	5,500
12 U.S.C. 1817(j)(16)(B)	Change in Control—2nd Tier	27,500
12 U.S.C. 1817(j)(16)(C)	Change in Control—3rd Tier	1,175,000
12 U.S.C. 1818(i)(2)(A)	Violation of Law or Unsafe or Unsound Practice—1st Tier	5,500
12 U.S.C. 1818(i)(2)(B)	Violation of Law or Unsafe or Unsound Practice—2nd Tier	27,500
12 U.S.C. 1818(i)(2)(C)	Violation of Law or Unsafe or Unsound Practice—3rd Tier	1,175,000
12 U.S.C. 1884	Violation of Security Rules	110
12 U.S.C. 3349(b)	Appraisals Violation—1st Tier	5,500
12 U.S.C. 3349(b)	Appraisals Violation—2nd Tier	27,500
12 U.S.C. 3349(b)	Appraisals Violation—3rd Tier	1,175,000
42 U.S.C. 4012a(f)	Flood Insurance	350/115,000

PART 510—MISCELLANEOUS ORGANIZATIONAL REGULATIONS

3. The authority citation for part 510 continues to read as follows:

Authority: 12 U.S.C. 1462a, 1463, 1464; Pub. L. 101–410, 104 Stat. 890; Pub. L. 104–134, 110 Stat. 1321–358.

§ 510.6 [Removed]

4. Section 510.6 is removed.

Dated: October 4, 2000.

By the Office of Thrift Supervision.

Ellen Seidman,

Director.

[FR Doc. 00–26336 Filed 10–16–00; 8:45 am]

BILLING CODE 6720–01–P

DEPARTMENT OF TRANSPORTATION

Federal Aviation Administration

14 CFR Part 39

[Docket No. 2000–CE–01–AD; Amendment 39–11923; AD 2000–20–12]

RIN 2120–AA64

Airworthiness Directives; Aerotechnik s.r.o. Model L 13 SEH VIVAT Sailplanes

AGENCY: Federal Aviation Administration, DOT.

ACTION: Final rule.

SUMMARY: This amendment adopts a new airworthiness directive (AD) that applies to all Aerotechnik s.r.o. (Aerotechnik) Model L 13 SEH VIVAT sailplanes. This AD requires you to inspect the tail-fuselage hinge for strength requirements and damage, and also requires you to replace any hinge with damage or that does not meet strength requirements. This AD is the result of mandatory continuing airworthiness information (MCAI) issued by the airworthiness authority for the Czech Republic. The actions specified by this AD are intended to detect and correct any tail-fuselage hinge that is damaged or has inadequate material characteristics. Any tail-fuselage hinge with damage or inadequate material characteristics could fail and result in loss of controlled flight.

DATES: This AD becomes effective on November 27, 2000.

The Director of the **Federal Register** approved the incorporation by reference of certain publications listed in the regulations as of November 27, 2000.

ADDRESSES: You may get the service information referenced in this AD from Aerotechnik s.r.o., 686 04 Kunovic, Czech Republic; telephone: +420 632 537 111; facsimile: +420 632 537 900. You may examine this information at the Federal Aviation Administration (FAA), Central Region, Office of the Regional Counsel, Attention: Rules Docket No. 2000–CE–01–AD, 901 Locust, Room 506, Kansas City,

Missouri 64106; or at the Office of the **Federal Register**, 800 North Capitol Street, NW., suite 700, Washington, DC 20001.

FOR FURTHER INFORMATION CONTACT: Mike Kiesov, Aerospace Engineer, FAA, Small Airplane Directorate, 901 Locust, Room 301, Kansas City, Missouri 64106; telephone: (816) 329–4144; facsimile: (816) 329–4090.

SUPPLEMENTARY INFORMATION:

Discussion

What events have caused this AD? The Civil Aviation Authority (CAA), which is the airworthiness authority for the Czech Republic, recently notified the FAA that an unsafe condition may exist on all Aerotechnik Model L 13 SEH VIVAT sailplanes. The CAA reports an incident involving one of the affected sailplanes where the tail-fuselage attachment fitting was damaged. Further analysis reveals that the material characteristics of the tail-fuselage attachment fitting were inadequate.

What are the consequences if the condition is not corrected? The tail-fuselage attachment fitting is a primary structural element within the empennage. Failure of this part, if not detected and corrected, could result in loss of controlled flight.

Has FAA taken any action to this point? We issued a proposal to amend part 39 of the Federal Aviation Regulations (14 CFR part 39) to include an AD that would apply to all Aerotechnik Model L 13 SEH VIVAT sailplanes. This proposal was published in the **Federal Register** as a notice of proposed rulemaking (NPRM) on August 9, 2000 (65 FR 48646). The NPRM proposed to require you to inspect the tail-fuselage hinge for strength requirements and damage, and would require you to replace any hinge with damage or that does not meet strength requirements.

Was the public invited to comment? Interested persons were afforded an opportunity to participate in the making of this amendment. No comments were received on the proposed rule or the FAA's determination of the cost to the public.

The FAA's Determination

What is FAA's Final Determination on this Issue? After careful review of all available information related to the subject presented above, we have determined that air safety and the public interest require the adoption of the rule as proposed except for minor editorial corrections. We determined that these minor corrections:

- Will not change the meaning of the AD; and
- Will not add any additional burden upon the public than was already proposed.

Cost Impact

How many sailplanes does this AD impact? We estimate that this AD affects 20 sailplanes in the U.S. registry.

What is the cost impact of the inspection for the affected sailplanes on the U.S. Register? We estimate that it will take approximately 4 workhours per sailplane to accomplish the inspection, at an average labor rate of $60 an hour. Based on the cost factors presented above, we estimate the total cost impact of the inspection on U.S. operators to be $4,800, or $240 per sailplane.

What is the cost impact of the replacement for the affected sailplanes on the U.S. Register? We estimate that it will take approximately 16 workhours per sailplane to accomplish the replacement (as necessary), at an average labor rate of $60 an hour. The manufacturer will provide the replacement attachment fittings at no cost. Based on the cost factors presented above, we estimate the total labor cost impact of the replacement on U.S. operators to be $960 per sailplane.

Regulatory Impact

Does this AD impact various entities? The regulations adopted herein will not have a substantial direct effect on the States, on the relationship between the national government and the States, or on the distribution of power and responsibilities among the various levels of government. Therefore, it is determined that this final rule does not have federalism implications under Executive Order 13132.

Does this AD involve a significant rule or regulatory action? For the reasons discussed above, I certify that this action (1) is not a ''significant regulatory action'' under Executive Order 12866; (2) is not a ''significant rule'' under DOT Regulatory Policies and Procedures (44 FR 11034, February 26, 1979); and (3) will not have a significant economic impact, positive or negative, on a substantial number of small entities under the criteria of the Regulatory Flexibility Act. A copy of the final evaluation prepared for this action is contained in the Rules Docket. A copy of it may be obtained by contacting the Rules Docket at the location provided under the caption **ADDRESSES**.

List of Subjects in 14 CFR Part 39

Air transportation, Aircraft, Aviation safety, Incorporation by Reference, Safety.

Adoption of the Amendment

Accordingly, under the authority delegated to me by the Administrator, the Federal Aviation Administration amends part 39 of the Federal Aviation Regulations (14 CFR part 39) as follows:

PART 39—AIRWORTHINESS DIRECTIVES

1. The authority citation for part 39 continues to read as follows:

Authority: 49 U.S.C. 106(g), 40113, 44701.

§ 39.13 [Amended]

2. FAA amends Section 39.13 by adding a new AD to read as follows:

2000–20–12 **Aerotechnik S.R.O.:** Amendment 39–11923; Docket No. 2000–CE–01–AD.

(a) *What sailplanes are affected by this AD?* This AD applies to Model L 13 SEH VIVAT sailplanes, all serial numbers, certificated in any category.

(b) *Who must comply with this AD?* Anyone who wishes to operate any of the above sailplanes on the U.S. Register must comply with this AD.

(c) *What problem does this AD address?* The actions specified by this AD are intended to prevent the tail-fuselage hinge failing and consequent loss of controlled flight.

(d) *What must I do to address this problem?* To address this problem, you must accomplish the following actions:

Actions	Compliance times	Procedures
(1) Inspect the tail-fuselage attachment fitting, part number (P/N) A 102 021N, for damage and material hardness.	Within the next 60 days after November 27, 2000 (the effective date of this AD).	Follow the procedures in the Aerotechnik Service Bulletin SEH 13–005a, dated November 18, 1999.
(2) If the tail-fuselage attachment fitting is damaged or the material does not meet the hardness requirements specified in the service bulletin, you must replace the tail-fuselage attachment fitting.	Before further flight after the inspection	You must notify Aerotechnik and request they send the replacement part with installation instructions.

Actions	Compliance times	Procedures
(3) Do not install, on any sailplane, a P/N A 102 021N attachment fitting that has not passed the inspection requirements specified in paragraph (d)(1) of this AD.	As of November 27, 2000 (the effective date of this AD.	Inspect any attachment fitting in accordance with the previously referenced service bulletin.

(e) *Can I comply with this AD in any other way?* You may use an alternative method of compliance or adjust the compliance time if:

(1) Your alternative method of compliance provides an equivalent level of safety; and

(2) The Manager, Small Airplane Directorate approves your alternative. Submit your request through an FAA Principal Maintenance Inspector, who may add comments and then send it to the Manager, Small Airplane Directorate, 901 Locust, Room 301, Kansas City, Missouri 64106.

Note 1: This AD applies to each sailplane identified in paragraph (a) of this AD, regardless of whether it has been modified, altered, or repaired in the area subject to the requirements of this AD. For sailplanes that have been modified, altered, or repaired so that the performance of the requirements of this AD is affected, the owner/operator must request approval for an alternative method of compliance in accordance with paragraph (e) of this AD. The request should include an assessment of the effect of the modification, alteration, or repair on the unsafe condition addressed by this AD; and, if you have not eliminated the unsafe condition, specific actions you propose to address it.

(f) *Where can I get information about any already-approved alternative methods of compliance?* Contact Mike Kiesov, Aerospace Engineer, FAA, Small Airplane Directorate, 901 Locust, Room 301, Kansas City, Missouri 64106; telephone: (816) 329–4144; facsimile: (816) 329–4090.

(g) *What if I need to fly the sailplane to another location to comply with this AD?* The FAA can issue a special flight permit under sections 21.197 and 21.199 of the Federal Aviation Regulations (14 CFR 21.197 and 21.199) to operate your sailplane to a location where you can accomplish the requirements of this AD.

(h) *Are any service bulletins incorporated into this AD by reference?* Actions required by this AD must be done in accordance with Aerotechnik CZ Service Bulletin SEH 13–005a, dated November 18, 1999. The Director of the Federal Register approved this incorporation by reference under 5 U.S.C. 552(a) and 1 CFR part 51. You can get copies from Aerotechnikcz s.r.o., 686 04 Kunovic, Czech Republic; telephone: +420 632 537 111; facsimile: +420 632 537 900. You can look at copies at the FAA, Central Region, Office of the Regional Counsel, 901 Locust, Room 506, Kansas City, Missouri, or at the Office of the Federal Register, 800 North Capitol Street, NW., suite 700, Washington, DC 20001.

(i) *When does this amendment become effective?* This amendment becomes effective on November 27, 2000.

Note 2: The subject of this AD is addressed in Czech Republic AD Number CAA–AD–T–112/1999, dated November 18, 1999.

Issued in Kansas City, Missouri, on September 28, 2000.

Michael Gallagher,

Manager, Small Airplane Directorate, Aircraft Certification Service.

[FR Doc. 00–25553 Filed 10–16–00; 8:45 am]

BILLING CODE 4910–13–P

DEPARTMENT OF COMMERCE

National Oceanic and Atmospheric Administration

15 CFR Part 902

50 CFR Part 679

[Docket No. 000524152–0274–02; I.D. 030100C]

RIN 0648–AM34

Fisheries of the Exclusive Economic Zone Off Alaska; Vessel Monitoring System (VMS)

AGENCY: National Marine Fisheries Service (NMFS), National Oceanic and Atmospheric Administration (NOAA), Commerce.

ACTION: Final rule; VMS component notice of approval.

SUMMARY: NMFS issues a final rule requiring vessels participating in the directed fishery for Atka mackerel in the Aleutian Islands subarea (AI) of the Bering Sea and Aleutian Islands Area to carry and use a Vessel Monitoring System (VMS) transmitter, and revising regulations governing Atka mackerel harvest in the Community Development Quota (CDQ) fisheries. Additionally, NMFS issues notification of the approval of VMS components for use off Alaska. These actions are necessary to enhance monitoring of fishery activities within critical habitat areas. They are intended to further the conservation goals and objectives of the Fishery Management Plan for the Groundfish Fishery of the Bering Sea and Aleutian Islands Area (FMP).

DATES: Effective November 11, 2000.

ADDRESSES: Copies of the Regulatory Impact Review/Final Regulatory Flexibility Analysis (RIR/FRFA) prepared for this action may be obtained from Sue Salveson, Assistant Regional Administrator, Sustainable Fisheries Division, Alaska Region, NMFS, P.O. Box 21668, Juneau, AK 99802–1668, Attn: Lori Gravel, or by calling the Alaska Region, NMFS, at 907–586–7228. Send comments on any ambiguity or unnecessary complexity arising from the language used in this final rule to the Regional Administrator at the same address. Send comments on collection-of-information requirements to the same address and to the Office of Information and Regulatory Affairs, Office of Management and Budget (OMB), Washington DC 20503 (Attn: NOAA Desk Officer).

For ArgoNet Mar GE information, contact NACLS Inc., 9200 Basil Court, Suite 306, Largo, MD 20774; phone 301–341–1814.

To obtain copies of the list of approved VMS components, VMS installation instructions, or to apply to have a VMS component approved for use off Alaska, contact Guy Holt, Enforcement Division, Alaska Region, NMFS, P.O. Box 21767, Juneau, AK 99802–1668; phone (907)–586-9353.

FOR FURTHER INFORMATION CONTACT: Alan Kinsolving, 907–586–7228.

SUPPLEMENTARY INFORMATION:

Background

NMFS notes as an initial point that as a result of a U.S. District Court Order, NMFS has closed waters within critical habitat to all trawling. An interim rule implementing this closure was published on August 15, 2000 (65 FR 49766). While this closure is in effect, no trawling for Atka mackerel may occur inside critical habitat and no Atka mackerel catch should accrue against the inside critical habitat portion of the quota, unless it is harvested by non-trawl gear. This rule does not affect that closure.

In 1997, NMFS listed the western stock of Steller sea lions (*Eumetopias jubatus*) as an endangered species. A statutory requirement of the Endangered Species Act is that Federal actions taken within the critical habitat of a listed species must not jeopardize the continued existence of the populations of those species or adversely affect or modify their critical habitat. Because Atka mackerel are an important prey species for Steller sea lions, the Atka mackerel fishery must be managed to avoid potential jeopardy to Steller sea lions.

On January 22, 1999, NMFS published a final rule that reduced the percentage of Atka mackerel taken from Steller sea lion critical habitat over a 4-year period in the Western and Central Districts of the AI (64 FR 3446). The regulations implemented by that final rule prohibit all trawling for groundfish within areas designated as Steller sea lion critical habitat when NMFS determines that the harvest of Atka mackerel has reached the applicable limits specified in the regulations for the year and district. A critical habitat trawl closure remains in effect until NMFS closes the Atka mackerel fishery in that area.

When critical habitat areas are closed, continued Atka mackerel fishing takes place very close or adjacent to the closed critical habitat areas. The boundaries of these areas are complex, the areas are remote, and the weather is frequently poor. Ensuring that no fishing is taking place inside critical habitat using traditional methods of enforcement, such as aerial surveillance, is difficult and costly. Effective enforcement of these closures would be enhanced if vessels participating in the fishery use a VMS transmitter that automatically and frequently transmits vessel position to NMFS so that vessels fishing near critical habitat can be monitored closely.

This final rule requires vessels participating in a directed fishery for Atka mackerel in the AI to have an operating NMFS-approved VMS transmitter on board. These transmitters automatically determine the vessel's location several times per hour using Global Positioning System (GPS) satellites and send the position information to NMFS via a mobile communication service provider. The VMS transmitters are designed to be tamper-resistant and automatic. The vessel owner should be unaware of exactly when the unit is transmitting and will be unable to alter the signal or the time of transmission.

This rule requires the owner of a vessel participating in the AI Atka mackerel fishery to obtain and install a NMFS-approved VMS transmitter. The rule also requires the use of the transmitter at all times when engaging in directed fishing for Atka mackerel. The rule prohibits trawl vessels not carrying properly installed and operating VMS units from retaining Atka mackerel at more than the maximum retainable amount of 20 percent established in regulations at § 679.20(e) and (f) while fishing in the AI subarea.

This rule also revises regulations governing Atka mackerel harvest in the CDQ fisheries. Current regulations prohibit any trawling by a CDQ group inside critical habitat after the specified percent of the group's annual Atka mackerel CDQ has been reached. This action will change these requirements so that each CDQ group may harvest no more than the specified percentage of their Atka mackerel CDQ inside the critical habitat areas. This will provide more flexibility to the CDQ groups for management of their Atka mackerel CDQs.

Response to Comments

NMFS received two letters of comment on the proposed rule that was published June 12, 2000, for a 30-day comment period (65 FR 36810). Both letters indicated support for the action but expressed concerns or suggested clarifications; these comments are summarized below followed by NMFS' responses.

Comment 1. The proposed rule states that installation of a VMS transmitter would take less than 6 hours and estimates that 4 hours per year will be required to maintain the unit. Under most circumstances, the installation of the Argos MAR GE requires less than 2 hours. The unit has a lifetime of 5 years and should require no annual maintenance.

Response. Comment noted. However, NMFS attempts to estimate conservatively the burden that a regulation may impose on the public. In this case, NMFS believes that in some circumstances the installation of a VMS transmitter could take as much as 6 hours. Further, NMFS believes that annual maintenance could be required in some circumstances.

Comment 2. VMS transmitters should only be required in the Western and Central Districts of the AI. Because there is no separate apportionment of the Atka mackerel TAC to critical habitat areas in the Eastern District of the AI, there is no need to require VMS transmitters in that district. Requiring VMS transmitters in the Eastern AI would impose an unnecessary burden on vessels that fish for Atka mackerel in the Eastern AI, but do not fish for Atka mackerel in the Central or Western AI.

Response. NMFS disagrees. Though there is not a separate apportionment of TAC to critical habitat areas in the Eastern AI, there are critical habitat areas in the Eastern AI that are closed to directed fishing for Atka mackerel and preventing illegal fishing activity in those areas is just as difficult. Thus, NMFS believes that allowing some vessels to fish for Atka mackerel in the AI without VMS transmitters would unnecessarily complicate enforcement. Second, NMFS believes that the number of vessels that target Atka mackerel in the Eastern AI that do not also target Atka mackerel in the Central or Western AI is not significant. Based on Weekly Production Report Data from 1998 and 1999, only one vessel reported landings from the Eastern AI in an Atka mackerel target that did not also report landings in an Atka mackerel target in the Western or Central AI. Based on 1999 observer data from vessels that did not retain Atka mackerel in excess of the maximum retainable bycatch (MRB) amount in the Central and Western AI, only two hauls were made in the Eastern AI where the amount of retained Atka mackerel exceeded the MRB amount. These data indicate that virtually no targeting of Atka mackerel in the Eastern AI by vessels that do not also target Atka mackerel occurs in the Central or Western AI.

Comment 3. Vessel personnel should have the ability to monitor the VMS unit's GPS reading.

Response. The type approval specifications for VMS units do not prevent the unit from displaying the location so long as the vessel operator cannot determine when the unit is transmitting a location. If sufficient market demand exists, transmitter providers could offer this feature. However, this feature should not be necessary for achieving NMFS' monitoring and enforcement goals. Until recently, the Department of Defense deliberately degraded the GPS signal so that it was only accurate to within +/- 100m. However, as of May 1, 2000, deliberate degrading of the GPS system has been stopped and different GPS units should agree with each other within +/- 20 meters.

Comment 4. NMFS needs to develop a waiver system to allow vessels with inoperative VMS transmitters to continue fishing.

Response. NMFS disagrees and believes that granting of waivers would unnecessarily complicate enforcement. In comparison to the size of the fishery and the gross revenues of the vessels that participate in it, the cost of a transmitter is quite low. Vessel owners must balance the approximate $1,800 cost of a backup transmitter with the risk of lost fishing time in the event of transmitter failure.

After consideration of the comments received, NMFS approves this final rule. No changes in the regulatory text were made between the proposed and final rule.

Notice of VMS Component Approval

In the proposed rule to require VMS in the Atka mackerel fishery (65 FR

36810, June 12, 2000), NMFS set forth criteria for the approval of VMS components. These criteria were based on national standards published in the **Federal Register** on March 31, 1994 (59 FR 15180).

Based on the information reviewed to date, NMFS approves the ArgoNet Mar GE transmitter, for which North American Collection and Location by Satellite, Inc. (NACLS) is the sole communications service provider.

The MAR GE transmitter also has been approved for use in the Atlantic Highly Migratory Species Fisheries. Additional details concerning this transmitter may be found in the notice of approval published in the **Federal Register** on September 9, 1999 (64 FR 48988).

A vessel owner wishing to purchase this transmitter should contact the provider (see **ADDRESSES**).

At this time, NMFS believes that only one vendor produces VMS components that provide seamless and transparent communications from all areas off Alaska. However, other vendors that manufacture or distribute VMS components that meet the approval criteria set out in the proposed rule, are encouraged to contact NMFS. As additional components are approved, notification will be published in the **Federal Register**.

Small Entity Compliance Guide

The following information satisfies the Small Business Regulatory Enforcement Fairness Act of 1996, which requires a plain language guide to compliance with this final rule by affected small entities.

What is a VMS? A VMS consists of a transmitter, installed on the vessel, and a communications service provider that relays the transmitter's signal to NMFS. The transmitter determines the vessel's position using GPS satellites and automatically transmits the position to the communications service provider.

Who must carry a VMS transmitter? A vessel that engages in directed fishing for Atka mackeral in the AI must carry an operating VMS transmitter. You must receive confirmation from NMFS that the transmitter is operating before you start directed fishing, and you must continue to use the VMS transmitter until the Atka mackerel season has ended unless your vessel is in port.

How do I obtain, install, and activate my VMS transmitter? For complete instructions on how to install and operate your VMS transmitter, contact Guy Holt, Enforcement Division, Alaska Region, NMFS, P.O. Box 21767, Juneau, AK 99802—1668; phone (907)—586-9353. At this time, the only VMS transmitter approved for use off Alaska is the ArgoNet Mar GE. Vessel owners wishing to purchase the Mar GE transmitter may contact NACLS Inc., 9200 Basil Court, Suite 306, Largo, MD 20774; phone 301—341—1814. When purchasing a transmitter, the vessel owner should request a unit configured for use by vessels off Alaska. The vessel owner will also need to complete an ArgoNet contract with NACLS and establish credit with ArgoNet. The transmitter will automatically begin transmitting position reports when the power is connected. Vessel owners should confirm that the position reports are being received prior to directed fishing for Atka mackerel, by calling NMFS Enforcement Division.

When can I turn my transmitter off? Your transmitter will automatically reduce the frequency of transmission to once per week when your vessel is stationary. You may disconnect the transmitter when the Atka mackerel fishery in which you participated has closed.

What should I do if my transmitter stops working? The ArgoNet Mar GE is equipped with an alarm to alert you if it is unable to transmit. If the unit stops working, you must stop directed fishing for Atka mackerel until the unit is repaired or replaced. Though VMS transmitters have shown themselves to be reliable, we recommend that vessel owners consider carrying a backup transmitter.

Classification

Notwithstanding any other provision of the law, no person is required to respond to, nor shall any person be subject to a penalty for failure to comply with, a collection-of-information subject to the requirements of the Paperwork Reduction Act (PRA), unless that collection-of-information displays a currently valid OMB control number.

This final rule contains a new collection-of-information requirement that was approved by the OMB under the PRA and issued OMB control number 0648–0417. The new information requirements include the requirement to install, maintain, and use a NMFS-approved VMS unit. The public reporting burden for this collection of information is estimated to average 6 hours to install the unit, 4 hours per year to maintain the unit, and 5 seconds per response to transmit data. These estimates include the time for reviewing instructions, searching existing data sources, gathering and maintaining the data needed, and completing and reviewing the collection of information.

Send comments regarding this burden estimate or any other aspect of the collection of information to NMFS at the previously listed ADDRESS, and to the Office of Information and Regulatory Affairs, Office of Management and Budget, Washington, DC 20503 (Attn: NOAA Desk Officer).

NMFS prepared a Final Regulatory Flexibility Analysis (FRFA) describing the impact of the action on small entities. A summary of the FRFA follows.

This action requires that factory trawlers participating in the Aleutian Islands Atka mackerel fishery carry and use a VMS unit. It is necessary to ensure that NMFS does not violate a statutory requirement of the ESA that federally managed fisheries not adversely affect designated critical habitat, and it is being promulgated under the authority of the Magnuson-Stevens Act. This action will have a small but negative impact on the approximately 13 factory trawlers that fish for Atka mackerel in the Aleutian Islands. Four of these vessels caught and processed only small amounts of Atka mackerel and it constituted less than 5 percent of their retained catch. The other 9 vessels caught and processed over 95 percent of the Atka mackerel that was harvested. During 1998, these 9 vessels caught and processed 137,790 mt of groundfish off Alaska. Based on 1997 ex-vessel price data, this catch had an approximate value of $41 million prior to processing. The additional value added by at-sea processing is not known. None of the 9 vessels had gross revenues of less than $3 million, the threshold established by the SBA for 'small' fish harvesting businesses. NMFS believes that none of the vessels that fish for Atka mackerel in the Aleutian Islands would qualify as small entities.

The preferred alternative would impose new reporting and recordkeeping requirements on these vessels of approximately 12.1 hours per year per vessel. It would not duplicate, overlap, or conflict with existing Federal rules. In addition to the preferred alternative, the analysis considered a ''no action'' alternative (status quo) that would not require the use of VMS units for vessels engaged in directed fishing for Atka mackerel in the Aleutian Islands. This alternative was rejected because it would fail to meet NMFS' need to facilitate monitoring and enforcement of Steller sea lion protective measures. Maintaining the status quo could have minimized impacts on small entities. However, that alternative would not have achieved the objectives of this action.

A copy of the RIR/FRFA can be obtained from NMFS (see **ADDRESSES**).

This final rule has been determined to be not significant for purposes of E.O. 12866.

The President has directed Federal agencies to use plain language in their communication with the public, including regulations. To comply with this directive, we seek public comment on any ambiguity or unnecessary complexity arising from the language used in this final rule. Such comments should be sent to the Alaska Regional Administrator (see **ADDRESSES**).

List of Subjects in 15 CFR Part 902

Reporting and recordkeeping requirements.

List of Subjects in 50 CFR Part 679

Alaska Fisheries, Reporting and recordkeeping requirements.

Dated: October 10, 2000.

William T. Hogarth,

Deputy Assistant Administrator for Fisheries, National Marine Fisheries Service.

For the reasons set out in the preamble, 15 CFR part 902, chapter IX, and 50 CFR part 679 are amended as follows:

PART 902—NOAA INFORMATION COLLECTION REQUIREMENTS UNDER THE PAPERWORK REDUCTION ACT; OMB CONTROL NUMBERS

1. The authority citation for part 902 continues to read as follows:

Authority: 44 U.S.C. 3501 *et seq.*

2. In § 902.1, the table in paragraph (b) is amended by adding under 50 CFR the following entries in numerical order:

§ 902.1 OMB Control numbers assigned pursuant to the Paperwork Reduction Act.

* * * * *

(b) * * *

CFR part or section where the information collection requirement is located	Current OMB control number the information (All numbers begin with 0648–)
* * * *	*
50 CFR	
* * * *	*
679.28(f)(3)(i)	–0417
679.28(f)(3)(ii)	–0417
679.28(f)(3)(iii)	–0417
* * * *	*

PART 679—FISHERIES OF THE EXCLUSIVE ECONOMIC ZONE OFF ALASKA

1. The authority citation for part 679 continues to read as follows:

Authority: 16 U.S.C. 773 *et seq.*, 1801 *et seq.*, and 3631 *et seq.*

2. In § 679.7, paragraph (a)(2) is revised and a new paragraph (c)(3) is added to read as follows:

§ 679.7 Prohibitions.

(a) * * *

(2) Conduct any fishing contrary to notification of inseason action, closure, or adjustment issued under § 679.20, § 679.21, § 679.22, § 679.25.

* * * * *

(c) * * *

(3) Use a vessel to participate in a directed fishery for Atka mackerel in the Aleutian Islands subarea unless that vessel carries a NMFS-approved Vessel Monitoring System (VMS) transmitter and complies with the requirements described at § 679.28(f).

* * * * *

3. In § 679.22, paragraph (a)(8)(iii)(D) is revised to read as follows:

§ 679.22 Closures.

(a) * * *

(8) * * *

(iii) * * *

(D) CDQ fishing. A CDQ group is prohibited from exceeding the percentage of the annual Atka mackerel CDQ for Steller sea lion critical habitat in the Western and/or Central Districts of the AI specified at paragraph (a)(8)(iii)(B) of this section (see Table 1, Table 2, and Figure 4 to part 226 of this title).

* * * * *

4. In § 679.28, paragraph (a) is revised and a new paragraph (f) is added to read as follows:

§ 679.28 Equipment and operational requirements.

(a) *Applicability*. This section contains the requirements for scales, observer sampling stations, bins for volumetric estimates, and vessel monitoring system hardware. This section does not require any vessel or processor to provide this equipment. Such requirements appear elsewhere in this part.

* * * * *

(f) *Vessel Monitoring System (VMS) Requirements*--(1) *What is a VMS?* A VMS consists of a NMFS-approved VMS transmitter that automatically determines the vessels position and transmits it to a NMFS-approved communications service provider. The communications service provider receives the transmission and relays it to NMFS.

(2) *How are VMS transmitters and communications service providers approved by NMFS?* (i) NMFS publishes type approval specifications for VMS components in the **Federal Register**.

(ii) Transmitter manufacturers or communication service providers may submit products or services to NMFS for evaluation based on the published specifications.

(iii) NMFS will publish a list of NMFS–approved transmitters and communication service providers in the **Federal Register**. As necessary, NMFS will publish amendments to the list of approved components in the **Federal Register**.

(3) *What are the vessel owner's responsibilities?* If you are a vessel owner that must participate in a VMS, you or your crew must:

(i) Obtain a NMFS-approved VMS transmitter and have it installed onboard your vessel in accordance with the instructions provided by NMFS. You may get a copy of the VMS installation and operation instructions from the Regional Administrator upon request.

(ii) Activate the VMS transmitter and receive confirmation from NMFS that the VMS transmissions are being received before participating in a fishery requiring the VMS.

(iii) Continue the VMS transmissions until the fishery requiring VMS has closed or until notified by NMFS staff that you may stop transmissions.

(iv) Stop fishing immediately if informed by NMFS staff or an authorized officer that NMFS is not receiving position reports from the VMS transmitter.

(v) Make the VMS transmitter available for inspection by NMFS personnel, observers or an authorized officer.

(vi) Ensure that the VMS transmitter is not tampered with, disabled, destroyed or operated improperly.

(vii) Pay all charges levied by the communication service provider.

[FR Doc. 00–26656 Filed 10–16–00; 8:45 am]

BILLING CODE: 3510–22–S

DEPARTMENT OF THE TREASURY

Internal Revenue Service

26 CFR Parts 1 and 602

[TD 8905]

RIN 1545–AW74

Preparer Due Diligence Requirements for Determining Earned Income Credit Eligibility

AGENCY: Internal Revenue Service (IRS), Treasury.

ACTION: Final regulations and removal of temporary regulations.

SUMMARY: This document contains final regulations relating to the due diligence requirements under section 6695(g) of the Internal Revenue Code for paid preparers of Federal income tax returns or claims for refund involving the earned income credit (EIC). These regulations reflect changes to the law made by the Taxpayer Relief Act of 1997. The regulations provide guidance to paid preparers who prepare Federal income tax returns or claims for refund claiming the earned income credit.

DATES: *Effective Date.* These regulations are effective October 17, 2000.

Applicability Date. For dates of applicability, see § 1.6695–2(d) of these regulations.

FOR FURTHER INFORMATION CONTACT: Andrea Tucker, (202) 622–4940 (not a toll-free number).

SUPPLEMENTARY INFORMATION:

Paperwork Reduction Act

The collection of information in these final regulations has been reviewed and approved by the Office of Management and Budget in accordance with the Paperwork Reduction Act of 1995 (44 U.S.C. 3507) under control number 1545–1570. This information is required by the IRS to determine preparer due diligence compliance for purposes of the penalty imposed under section 6695(g). Responses to this collection of information are mandatory.

An agency may not conduct or sponsor, and a person is not required to respond to, a collection of information unless the collection of information displays a valid control number assigned by the Office of Management and Budget.

The estimated annual burden per recordkeeper varies depending on individual circumstances. The estimated total annual recordkeeping burden: 507,136 hours with the estimated average annual burden hours per recordkeeper: 5 hours 4 minutes (40 minutes per return or claim for refund, 7.6 returns per preparer). The estimated number of recordkeepers: 100,000.

Comments concerning the accuracy of this burden estimate and suggestions for reducing this burden should be sent to the Internal Revenue Service, Attn: IRS Reports Clearance Officer, OP:FS:FP, Washington, DC 20224, and to the Office of Management and Budget, Attn: Desk Officer for the Department of the Treasury, Office of Information and Regulatory Affairs, Washington, DC 20503.

Books or records relating to this collection of information must be retained as long as their contents may become material in the administration of any internal revenue law. Generally, tax returns and tax return information are confidential, as required by 26 U.S.C. 6103.

Background

Section 6695(g) was added by section 1085(a)(2) of the Taxpayer Relief Act of 1997, Public Law 105–34 (11 Stat. 788, 955 (1997)) (the Act), effective for taxable years beginning after December 31, 1996. Section 6695(g) imposes a $100 penalty for each failure by an income tax return preparer to meet the due diligence requirements set forth in regulations prescribed by the Secretary.

On December 22, 1997, the IRS published Notice 97–65 (1997–2 C.B. 326), in which the IRS set forth the preparer due diligence requirements for 1997 returns and claims for refund involving the EIC. To avoid the imposition of the penalty under section 6695(g) for 1997 returns and claims for refund, Notice 97–65 required preparers to meet four requirements: (1) Complete the Earned Income Credit Eligibility Checklist attached to Notice 97–65 (Eligibility Checklist), or otherwise record the information necessary to complete the Eligibility Checklist; (2) complete the Earned Income Credit Worksheet (Computation Worksheet), as contained in the 1997 Form 1040 instructions, or otherwise record the computation and information necessary to complete the Computation Worksheet; (3) not know or have reason to know that any information used by the preparer in determining eligibility for, and the amount of, the EIC is incorrect; and (4) retain for three years the Eligibility Checklist and Computation Worksheet (or alternative records), and a record of how and when the information used to determine eligibility for, and the amount of, the EIC was obtained by the preparer. This information may be retained as a paper record, in magnetic media format, or in an electronic storage media system, consistent with applicable IRS revenue procedures.

On December 21, 1998, temporary regulations (TD 8798, 1999–1 C.B. 804) under section 6695(g) were published in the **Federal Register** (63 FR 70339). A notice of proposed rulemaking (REG–120168–97, 1999–1 C.B. 809) cross-referencing the temporary regulations was published in the **Federal Register** (63 FR 70357) on that same date. The text of the temporary regulations served as the text of the proposed regulations. The requirements set forth in the temporary regulations were substantially similar to those in Notice 97–65.

The notice of proposed rulemaking solicited comments from the public. One comment was received, but no public hearing was requested or held. After consideration of the comment received, the proposed regulations under section 6695(g) are adopted by this Treasury decision, and the corresponding temporary regulations are removed.

Summary of Comments

The commentator expressed concern that requiring the completion of an eligibility checklist and a computation worksheet impose additional recordkeeping burdens on tax return preparers. The commentator did not suggest alternative due diligence requirements.

The additional recordkeeping required by the regulations is necessary to implement congressional intent with respect to section 6695(g). The legislative history accompanying the Act explains that Congress ''believes that more thorough efforts by return preparers are important to improving EIC compliance.'' H.R. Rep. No. 148, 105th Cong., 1st Sess. 512 (1997) and S. Rep. No. 29, 105th Cong., 1st Sess. 125 (1997). The additional information gathering and recordkeeping required by these regulations are intended to ensure that preparers are thorough when determining whether a taxpayer qualifies to claim the EIC credit. Further, the regulations allow preparers the flexibility to use either the prescribed forms or alternative records containing the same information as the prescribed forms to meet the due diligence requirements.

Special Analyses

It has been determined that this Treasury decision is not a significant regulatory action as defined in Executive Order 12866. Therefore, a regulatory assessment is not required. It also has been determined that section 553(b) of the Administrative Procedure

Act (5 U.S.C. chapter 5) does not apply to these regulations. Further, it is hereby certified, pursuant to sections 603(a) and 605(b) of the Regulatory Flexibility Act, that the collection of information in these regulations will not have a significant economic impact on a substantial number of small entities. This certification is based upon the fact that the amount of time necessary to record and retain the required information will be nominal for those income tax return preparers that choose to use the Alternative Eligibility Record and Alternative Computation Record. Therefore, a Regulatory Flexibility Analysis under the Regulatory Flexibility Act (5 U.S.C. chapter 6) is not required. Pursuant to section 7805(f) of the Internal Revenue Code, the notice of proposed rulemaking that preceded these regulations was submitted to the Chief Counsel for Advocacy of the Small Business Administration for comment on its impact on small business.

Drafting Information

The principal author of these regulations is Andrea Tucker, Office of Associate Chief Counsel, Procedure and Administration (Administrative Provisions and Judicial Practice Division). However, other personnel from the IRS and Treasury Department participated in their development.

List of Subjects

26 CFR Part 1

Income taxes, Reporting and recordkeeping requirements.

26 CFR Part 602

Reporting and recordkeeping requirements.

Amendments to the Regulations

Accordingly, 26 CFR parts 1 and 602 are amended as follows:

PART 1—INCOME TAXES

Paragraph 1. The authority citation for part 1 is amended by removing the entry for ''Section 1.6695–2T'' and adding an entry in numerical order to read in part as follows:

Authority: 26 U.S.C. 7805 * * *. Section 1.6695–2 also issued under 26 U.S.C. 6695(g). * * *

Par. 2. Section 1.6695–2 is added to read as follows:

§ 1.6695–2 Preparer due diligence requirements for determining earned income credit eligibility.

(a) *Penalty for failure to meet due diligence requirements.* A person who is an income tax return preparer (preparer) of an income tax return or claim for refund under subtitle A of the Internal Revenue Code with respect to determining the eligibility for, or the amount of, the earned income credit (EIC) under section 32 and who fails to satisfy the due diligence requirements of paragraph (b) of this section will be subject to a penalty of $100 for each such failure. However, no penalty will be imposed under section 6695(g) on a person who is an income tax return preparer solely by reason of—

(1) Section 301.7701–15(a)(2) and (b) of this chapter, on account of having given advice on specific issues of law; or

(2) Section 301.7701–15(b)(3) of this chapter, on account of having prepared the return solely because of having prepared another return that affects amounts reported on the return.

(b) *Due diligence requirements.* A preparer must satisfy the following due diligence requirements:

(1) *Completion of eligibility checklist.* (i) The preparer must either—

(A) Complete Form 8867, ''Paid Preparer's Earned Income Credit Checklist,'' or such other form and such other information as may be prescribed by the Internal Revenue Service (IRS) (Eligibility Checklist); or

(B) Otherwise record in the preparer's paper or electronic files the information necessary to complete the Eligibility Checklist (Alternative Eligibility Record). The Alternative Eligibility Record may consist of one or more documents containing the required information.

(ii) The preparer's completion of the Eligibility Checklist or Alternative Eligibility Record must be based on information provided by the taxpayer to the preparer or otherwise reasonably obtained by the preparer.

(2) *Computation of credit.* (i) The preparer must either—

(A) Complete the Earned Income Credit Worksheet in the Form 1040 instructions or such other form and such other information as may be prescribed by the IRS (Computation Worksheet); or

(B) Otherwise record in the preparer's paper or electronic files the preparer's EIC computation, including the method and information used to make the computation (Alternative Computation Record). The Alternative Computation Record may consist of one or more documents containing the required information.

(ii) The preparer's completion of the Computation Worksheet or Alternative Computation Record must be based on information provided by the taxpayer to the preparer or otherwise reasonably obtained by the preparer.

(3) *Knowledge.* The preparer must not know, or have reason to know, that any information used by the preparer in determining the taxpayer's eligibility for, or the amount of, the EIC is incorrect. The preparer may not ignore the implications of information furnished to, or known by, the preparer, and must make reasonable inquiries if the information furnished to, or known by, the preparer appears to be incorrect, inconsistent, or incomplete.

(4) *Retention of records.* (i) The preparer must retain—

(A) A copy of the completed Eligibility Checklist or Alternative Eligibility Record;

(B) A copy of the Computation Worksheet or Alternative Computation Record; and

(C) A record of how and when the information used to complete the Eligibility Checklist or Alternative Eligibility Record and the Computation Worksheet or Alternative Computation Record was obtained by the preparer, including the identity of any person furnishing the information.

(ii) The items in paragraph (b)(4)(i) of this section must be retained for three years after the June 30th following the date the return or claim for refund was presented to the taxpayer for signature, and may be retained on paper or electronically in the manner prescribed in applicable regulations, revenue rulings, revenue procedures, or other appropriate guidance (see § 601.601(d)(2) of this chapter).

(c) *Exception to penalty.* The section 6695(g) penalty will not be applied with respect to a particular income tax return or claim for refund if the preparer can demonstrate to the satisfaction of the IRS that, considering all the facts and circumstances, the preparer's normal office procedures are reasonably designed and routinely followed to ensure compliance with the due diligence requirements of paragraph (b) of this section, and the failure to meet the due diligence requirements of paragraph (b) of this section with respect to the particular return or claim for refund was isolated and inadvertent.

(d) *Effective date.* This section applies to income tax returns and claims for refund due on or after October 17, 2000.

§ 1.6695–2T [Removed]

Par. 3. Section 1.6695–2T is removed.

PART 602—OMB CONTROL NUMBERS UNDER THE PAPERWORK REDUCTION ACT

Par. 4. The authority citation for part 602 continues to read as follows:

Authority: 26 U.S.C. 7805.

Par. 5. In § 602.101, paragraph (b) is amended by removing the entry for ''1.6695–2T'' and adding the following entry in numerical order to the table to read as follows:

§ 602.101 OMB Control numbers.

* * * * *

(b) * * *

CFR part or section where identified and described	Current OMB control No.
* * * * *	
1.6695–2	1545–1570
* * * * *	

Approved: October 6, 2000.

Robert E. Wenzel,

Deputy Commissioner of Internal Revenue.

Jonathan Talisman,

Acting Assistant Secretary of the Treasury.

[FR Doc. 00–26521 Filed 10–16–00; 8:45 am]

BILLING CODE 4830–01–P

DEPARTMENT OF LABOR

Mine Safety and Health Administration

30 CFR Parts 56, 57, 62, 70 and 71

RIN 1219–AA53

Health Standards for Occupational Noise Exposure; Correction

AGENCY: Mine Safety and Health Administration (MSHA), Labor.

ACTION: Final rule; corrections.

SUMMARY: This document contains corrections to preamble to the final rule which were published in the **Federal Register** of Monday, September 13, 1999 (64 FR 49548). The rule related to the health standards for occupational noise exposure.

DATES: Effective October 17, 2000.

FOR FURTHER INFORMATION CONTACT: Carol J. Jones, Director, Office of Standards, Regulations, and Variances, MSHA, (703) 235–1910 (not a toll-free call).

SUPPLEMENTARY INFORMATION: As published, the preamble contains errors which may prove to be misleading and which need to be corrected.

Accordingly, the preamble is corrected as follows:

1. On page 49551, in ''Chart 1: General Requirements'' under the heading Noise level, the phrase ''At or above 105 dBA (dual hearing protection level)'' should read ''Above 105 dBA (dual hearing protection level).''

2. On page 49551, in ''Comparison Chart 2: General Features'' under the heading Final rule, the third entry should read ''80 dBA for action level and 90 dBA for PEL.''

3. On page 49558, in the second column, in the last sentence, the word ''tone'' should be deleted to make the sentence read ''Most definitions of hearing impairment are based solely on pure audiometry, in which an audiometer is used to measure an individual's threshold hearing level—the lowest level of discrete frequency tones that he or she can hear.''

4. On page 49590, in the second column, in the first paragraph, in the last sentence, the word ''regulations'' should be changed to ''standards'' to make the sentence read ''Accordingly, MSHA has concluded that noise falls within the scope of section 103(c) of the Mine Act, and that MSHA has the authority to establish standards that provide miners and their representatives access to noise exposure monitoring conducted by mine operators.''

5. On page 49607, in the third column, in the first full paragraph, in the first full sentence, the words ''equals or'' should be inserted so that the sentence reads ''The final rule, like the proposal, requires mine operators to offer miners whose noise exposure equals or exceeds the action level the opportunity for audiometric . . .''

6. On page 49608, in the second column, in the first full paragraph, in the first sentence, the words ''equals or'' should be inserted so that the sentence reads ''Under § 62.120 of the final rule, mine operators must enroll miners whose exposure to noise equals or exceeds the action level in a hearing conservation program . . .''

7. On page 49627, in the first column, in the first full paragraph, in the fourth sentence, the term ''Paragraph (c)'' should be changed to ''Paragraph (b).'' In the second full paragraph, in the first sentence, the term ''Paragraph (a)(3)'' should be changed to ''Paragraph (b).'' In the third full paragraph, in the first sentence, the term ''Paragraph (b)(1)'' should be changed to ''Paragraph (c)(1).'' In the last paragraph, in the last sentence, the term ''Paragraph (b)(1)'' should be changed to ''Paragraph (c)(1).'' In the second column, in the first full paragraph, in the first sentence, the term ''Paragraph (b)(2)'' should be changed to ''Paragraph (c)(2),'' and in the last sentence the term ''Paragraph (b)(2)'' should be changed to ''Paragraph (c)(2).''

Dated: September 28, 2000.

J. Davitt McAteer,

Assistant Secretary for Mine Safety and Health.

[FR Doc. 00–26620 Filed 10–16–00; 8:45 am]

BILLING CODE 4510–43–U

ENVIRONMENTAL PROTECTION AGENCY

40 CFR Part 180

[OPP–301049; FRL–6742–9]

RIN 2070–AB78

Azoxystrobin; Pesticide Tolerances for Emergency Exemptions

AGENCY: Environmental Protection Agency (EPA).

ACTION: Final rule.

SUMMARY: This regulation establishes a time-limited tolerance for residues of azoxystrobin or methyl (*E*)-2-2-[6-(2-cyanophenoxy)pyrimidin-4-yloxy]phenyl-3-methoxyacrylate) and its *Z* isomer in or on brassica leafy vegetable. This action is in response to EPA's granting of an emergency exemption under section 18 of the Federal Insecticide, Fungicide, and Rodenticide Act (FIFRA) authorizing use of the pesticide on brassica leafy vegetable. This regulation establishes a maximum permissible level for residues of azoxystrobin in this food commodity. The tolerance will expire and is revoked on December 31, 2001.

DATES: This regulation is effective October 17, 2000. Objections and requests for hearings, identified by docket control number OPP–301049, must be received by EPA on or before December 18, 2000.

ADDRESSES: Written objections and hearing requests may be submitted by mail, in person, or by courier. Please follow the detailed instructions for each method as provided in Unit VII. of the **SUPPLEMENTARY INFORMATION**. To ensure proper receipt by EPA, your objections and hearing requests must identify docket control number OPP–301049 in the subject line on the first page of your response.

FOR FURTHER INFORMATION CONTACT: By mail: Jacqueline E. Gwaltney, Registration Division (7505C), Office of Pesticide Programs, Environmental Protection Agency, 1200 Pennsylvania Ave., NW., Washington, DC 20460; telephone number: 703 305–6792; and e-mail address: gwaltney.jackie@epa.gov.

SUPPLEMENTARY INFORMATION:

I. General Information

A. Does this Action Apply to Me?

You may be potentially affected by this action if you are an agricultural producer, food manufacturer, or pesticide manufacturer. Potentially affected categories and entities may include, but are not limited to:

Categories	NAICS codes	Examples of potentially affected entities
Industry	111 112 311 32532	Crop production Animal production Food manufacturing Pesticide manufacturing

This listing is not intended to be exhaustive, but rather provides a guide for readers regarding entities likely to be affected by this action. Other types of entities not listed in the table could also be affected. The North American Industrial Classification System (NAICS) codes have been provided to assist you and others in determining whether or not this action might apply to certain entities. If you have questions regarding the applicability of this action to a particular entity, consult the person listed under **FOR FURTHER INFORMATION CONTACT**.

B. How Can I Get Additional Information, Including Copies of This Document and Other Related Documents?

1. *Electronically.*You may obtain electronic copies of this document, and certain other related documents that might be available electronically, from the EPA Internet Home Page at http://www.epa.gov/. To access this document, on the Home Page select ''Laws and Regulations,'' ''Regulations and Proposed Rules,'' and then look up the entry for this document under the ''**Federal Register**—Environmental Documents.'' You can also go directly to the **Federal Register** listings at http://www.epa.gov/fedrgstr/.

2. *In person.* The Agency has established an official record for this action under docket control number OPP–301049. The official record consists of the documents specifically referenced in this action, and other information related to this action, including any information claimed as Confidential Business Information (CBI). This official record includes the documents that are physically located in the docket, as well as the documents that are referenced in those documents. The public version of the official record does not include any information claimed as CBI. The public version of the official record, which includes printed, paper versions of any electronic comments submitted during an applicable comment period is available for inspection in the Public Information and Records Integrity Branch (PIRIB), Rm. 119, Mall #2, 1921 Jefferson Davis Hwy., Arlington, VA, from 8:30 a.m. to 4 p.m., Monday through Friday, excluding legal holidays. The PIRIB telephone number is (703) 305–5805.

II. Background and Statutory Findings

EPA, on its own initiative, in accordance with sections 408 (l)(6) of the Federal Food, Drug, and Cosmetic Act (FFDCA), 21 U.S.C. 346a, is establishing a tolerance for residues of the fungicide azoxystrobin or methyl (*E*)-2-2-[6-(2-cyanophenoxy)pyrimidin-4-yloxy]phenyl-3-methoxyacrylate) and its *Z* isomer, in or on brassica leafy vegetable at 25.0 parts per million (ppm). This tolerance will expire and is revoked on December 31, 2001. EPA will publish a document in the **Federal Register** to remove the revoked tolerances from the Code of Federal Regulations.

Section 408(l)(6) of the FFDCA requires EPA to establish a time-limited tolerance or exemption from the requirement for a tolerance for pesticide chemical residues in food that will result from the use of a pesticide under an emergency exemption granted by EPA under section 18 of FIFRA. Such tolerances can be established without providing notice or period for public comment. EPA does not intend for its actions on section 18 related tolerances to set binding precedents for the application of section 408 and the new safety standard to other tolerances and exemptions.

Section 408(b)(2)(A)(i) of the FFDCA allows EPA to establish a tolerance (the legal limit for a pesticide chemical residue in or on a food) only if EPA determines that the tolerance is ''safe.'' Section 408(b)(2)(A)(ii) defines ''safe'' to mean that ''there is a reasonable certainty that no harm will result from aggregate exposure to the pesticide chemical residue, including all anticipated dietary exposures and all other exposures for which there is reliable information.'' This includes exposure through drinking water and in residential settings, but does not include occupational exposure. Section 408(b)(2)(C) requires EPA to give special consideration to exposure of infants and children to the pesticide chemical residue in establishing a tolerance and to ''ensure that there is a reasonable certainty that no harm will result to infants and children from aggregate exposure to the pesticide chemical residue. . . .''

Section 18 of the Federal Insecticide, Fungicide, and Rodenticide Act (FIFRA) authorizes EPA to exempt any Federal or State agency from any provision of FIFRA, if EPA determines that ''emergency conditions exist which require such exemption.'' This provision was not amended by the Food Quality Protection Act (FQPA). EPA has established regulations governing such emergency exemptions in 40 CFR part 166.

III. Emergency Exemption for Azoxystrobin on Brassica Leafy Vegetable and FFDCA Tolerances

Georgia has also requested the use of azoxystrobin to control leaf spots of leafy greens caused by *Cercospora brassicicola* and *cercosporella brassica*. Losses due to these fungal pathogens have increased in recent year and, in some cases, entire fields are destroyed because leaves of greens are unmarketable due to spotting.

EPA has authorized under FIFRA section 18 the use of azoxystrobin on brassica leafy vegetable. After having reviewed the submission, EPA concurs that emergency conditions exist for this State.

As part of its assessment of this emergency exemption, EPA assessed the potential risks presented by residues of azoxystrobin in or on brassica leafy vegetable. In doing so, EPA considered the safety standard in FFDCA section 408(b)(2), and EPA decided that the necessary tolerance under FFDCA section 408(l)(6) would be consistent with the safety standard and with FIFRA section 18. Consistent with the need to move quickly on the emergency exemption in order to address an urgent non-routine situation and to ensure that the resulting food is safe and lawful, EPA is issuing this tolerance without notice and opportunity for public comment as provided in section 408(l)(6). Although these tolerances will expire and are revoked on December 31, 2001, under FFDCA section 408(l)(5), residues of the pesticide not in excess of the amounts specified in the tolerance remaining in or on brassica leafy vegetable after that date will not be unlawful, provided the pesticide is applied in a manner that was lawful under FIFRA, and the residues do not exceed a level that was authorized by this tolerance at the time of that application. EPA will take action to revoke this tolerance earlier if any experience with, scientific data on, or other relevant information on this

pesticide indicate that the residues are not safe.

Because these tolerances are being approved under emergency conditions, EPA has not made any decisions about whether azoxystrobin meets EPA's registration requirements for use on brassica leafy vegetable or whether a permanent tolerance for this use would be appropriate. Under these circumstances, EPA does not believe that this tolerance serves as a basis for registration of azoxystrobin by a State for special local needs under FIFRA section 24(c). Nor does this tolerance serve as the basis for any State other than to use this pesticide on this crop under section 18 of FIFRA without following all provisions of EPA's regulations implementing section 18 as identified in 40 CFR part 166. For additional information regarding the emergency exemption for azoxystrobin, contact the Agency's Registration Division at the address provided under **FOR FURTHER INFORMATION CONTACT**.

IV. Aggregate Risk Assessment and Determination of Safety

EPA performs a number of analyses to determine the risks from aggregate exposure to pesticide residues. For further discussion of the regulatory requirements of section 408 and a complete description of the risk assessment process, see the final rule on Bifenthrin Pesticide Tolerances (62 FR 62961, November 26, 1997) (FRL–5754–7) .

Consistent with section 408(b)(2)(D), EPA has reviewed the available scientific data and other relevant information in support of this action. EPA has sufficient data to assess the hazards of azoxystrobin and to make a determination on aggregate exposure, consistent with section 408(b)(2), for a time-limited tolerances for residues of azoxystrobin in or on brassica leafy vegetable at 25.0 ppm. EPA's assessment of the dietary exposures and risks associated with establishing the tolerance follows.

A. Toxicological Endpoints

The dose at which no adverse effects are observed (the NOAEL) from the toxicology study identified as appropriate for use in risk assessment is used to estimate the toxicological endpoint. However, the lowest dose at which adverse effects of concern are identified (the LOAEL) is sometimes used for risk assessment if no NOAEL was achieved in the toxicology study selected. An uncertainty factor (UF) is applied to reflect uncertainties inherent in the extrapolation from laboratory animal data to humans and in the variations in sensitivity among members of the human population as well as other unknowns. An UF of 100 is routinely used, 10X to account for interspecies differences and 10X for intra species differences. Discuss any additional uncertainty factors (other than the FQPA SF) used in the assessment.

For dietary risk assessment (other than cancer) the Agency uses the UF to calculate an acute or chronic reference dose (acute RfD or chronic RfD) where the RfD is equal to the NOAEL divided by the appropriate UF (RfD=NOAEL/UF). Where an additional safety factor is retained due to concerns unique to the FQPA, this additional factor is applied to the RfD by dividing the RfD by such additional factor. The acute or chronic Population Adjusted Dose (aPAD or cPAD) is a modification of the RfD to accommodate this type of FQPA Safety Factor.

For non-dietary risk assessments (other than cancer) the UF is used to determine the level of concern (LOC). For example, when 100 is the appropriate UF (10X to account for interspecies differences and 10X for intraspecies differences) the LOC is 100. To estimate risk, a ratio of the NOAEL to exposures (margin of exposure (MOE)=NOAEL/exposure) is calculated and compared to the LOC.

The linear default risk methodology (Q*) is the primary method currently used by the Agency to quantify carcinogenic risk. The Q* approach assumes that any amount of exposure will lead to some degree of cancer risk. A Q* is calculated and used to estimate risk which represents a probability of occurrence of additional cancer cases (e.g., risk is expressed as 1×10^{6} or one in a million). Under certain specific circumstances, MOE calculations will be used for the carcinogenic risk assessment. In this non-linear approach, a ''point of departure'' is identified below which carcinogenic effects are not expected. The point of departure is typically a NOAEL based on an endpoint related to cancer effects though it may be a different value derived from the dose response curve. To estimate risk, a ratio of the point of departure to exposure (MOE_{cancer} = point of departure/exposures) is calculated. A summary of the toxicological endpoints for azoxystrobin used for human risk assessment is shown in the following Table 1:

TABLE 1.—SUMMARY OF TOXICOLOGICAL DOSES AND ENDPOINTS FOR AZOXYSTROBIN FOR USE IN HUMAN RISK ASSESSMENT

Endpoint	Dose (mg/kg/day)	TES/RfD/FQPA Committee Determinations	Conclusion
Acute Dietary		No appropriate endpoint was identified for this exposure scenario. No developmental toxicity was observed in the rabbit and rat studies reviewed. Effects seen in the acute neurotoxicity study were due to abdominal discomfort, not primary neurotoxicity (TES Committee, 12/10/96).	This risk assessment is not required.
Chronic Dietary	NOAEL = 18.2 UF = 100	The RfD was established based on a chronic toxicity study (MRIDι43678139) in rats with a NOAEL of 18.2 mg/kg/day. Reduced body weights and bile duct lesions were observed at the LOAEL of 34 mg/kg/day. An uncertainty factor of 100 was used to account for both the inter-species extrapolation and the intra-species variability (see Memo, RfD Committee, 11/7/96).	This risk assessment is required. Chronic RfD =0.18 mg/kg/day.

TABLE 1.—SUMMARY OF TOXICOLOGICAL DOSES AND ENDPOINTS FOR AZOXYSTROBIN FOR USE IN HUMAN RISK ASSESSMENT—Continued

Endpoint	Dose (mg/kg/day)	TES/RfD/FQPA Committee Determinations	Conclusion
FQPA Safety Factor		The FQPA Safety Factor Committee recommended that the10x Safety Factor be removed for the following reasons: 1) the toxicology data base is complete; 2) the developmental and reproductive toxicity data did not indicate increased susceptibility of rats or rabbits to in utero and/or postnatal exposure; 3) unrefined chronic dietary exposure estimates (assuming all commodities contain tolerance level residues) will overestimate dietary exposure; 4) modeling data are used for ground and surface source drinking water exposure assessments resulting in estimates considered to be upper-bound concentrations; and 5) there are currently no registered residential uses for Azoxystrobin (FQPA document, 9/3/98).	10x Safety Factor was removed. The chronic population adjusted dose is equivalent to the chronic RfD (cPAD = cRfD).
Carcinogenicity		The HED RfD/Peer Review Committee determined that azoxystrobin should be classified as ''Not Likely'' to be a human carcinogen according to the proposed revised Cancer Guidelines (See TES Document, 12/10/96).	A cancer risk assess-ment is not required.

B. Residue Information

Tolerances for azoxystrobin (including time-limited tolerances) are published in 40 CFR 180.507. The tree nuts tolerance of 0.01 ppm which is listed in the 40 CFR was amended to 0.02 ppm.

For this analysis, tolerance level residues and 100 percent crop treated assumptions were made for all commodities. Processing studies show that residues do not concentrate in the following foods: citrus juice, grapes-raisins, plums-prunes (dried), potatoes-white (dry), grape juice, tomato juice, and tomatoes-puree. As a result, DEEM default processing factors (adjustment factors #1) were set to 1.0 for these commodities. The concentration factors for the following juice concentrates were changed to preserve the concentration ratio from juice to concentrate: grapes (3.6 to 3.0), grapefruit (8.3 to 3.9), lemons (11.4 to 5.7), limes (6 to 3), oranges (6.7 to 3.7), and tangerines (7.4 to 3.2).* The reference to the FQPA Safety Factor refers to any additional safety factor retained due to concerns unique to the FQPA.

C. Exposure Assessment

1. *Dietary exposure from food and feed uses.* Tolerances have been established (40 CFR 180.507) for the residues of azoxystrobin, in or on a variety of raw agricultural commodities at levels ranging from 0.010 ppm in tree nuts to 20 ppm in rice hulls. Included in these tolerances are numerous ones for animal commodities which were established in conjunction with tolerances for rice and wheat commodities. Risk assessments were conducted by EPA to assess dietary exposures from azoxystrobin in food as follows:

i. *Acute risk.* No toxicological effects which could be attributed to a single dietary exposure were observed, including developmental and neurotoxic effects in the appropriate studies. The Dietary Exposure Evaluation Model (DEEM) analysis evaluated the individual food consumption as reported by respondents in the USDA nationwide Continuing Surveys of Food Intake by Individuals (CSFII) and accumulated exposure to the chemical for each commodity. The following assumptions were made for the acute exposure assessments:

ii. *Chronic risk.* (Chronic RfD = 0.18 mg/kg/day) In conducting this chronic dietary risk assessment, HED has made very conservative assumptions: 100% of Brassica vegetables and turnip tops and all other commodities having azoxystrobin tolerances will contain azoxystrobin residues, and those residues will be at the level of the tolerance. Default concentration factors have been removed (i.e., set to 1) for the following commodities: grapes-juice, grapes-raisins, tomatoes-juice, tomatoes-puree, and potatoes-white (dry). Concentration factors were removed because data which were previously submitted show no concentration of residues into raisins, tomato juice and puree or potatoes. The default ratio between grape juice and juice concentrate was retained.

The Novigen DEEM (Dietary Exposure Evaluation Model) system was used for this chronic dietary exposure analysis. The analysis evaluates individual food consumption as reported by respondents in the USDA Continuing Surveys of Food Intake by Individuals conducted in 1989 through 1991. The model accumulates exposure to the chemical for each commodity and expresses risk as a function of dietary exposure.

The existing azoxystrobin tolerances (published, pending, and including the necessary Section 18 tolerance(s)) result in a theoretical maximum residue contribution (TMRC) that is equivalent to the following percentages of the Chronic RfD. As the 10x safety factor was removed, the chronic RfD is equal to the PAD (population-adjusted dose). As a result, the exposure given as a percentage of the total allowable exposure is reported as %PAD, as shown in the following Table 2:

TABLE 2.—SUMMARY: CHRONIC EXPOSURE ANALYSIS BY THE DEEM SYSTEMS

Population Subgroup	Exposure (mg/kg/day)	Percent Reference Dose [1] (%Chronic PAD/RfD)
U.S. Population (total)	0.012207	7.4%
All Infants (less than 1 year old)	0.014855	11.5%
Nursing Infants (less than 1 year old)	0.003915	3.1%
Non-Nursing Infants (less than 1 year old)	0.019460	14.0%
Children (1-6 years old)	0.021949	12.1%
Children (7-12 years old)	0.012950	7.7%
Non-Hispanic Blacks	0.016431	9.1%
Non-Hispanic/non- white/non-black	0.020967	14.8%
Females (13+/nursing)	0.014210	8.8%
Seniors 55+	0.013462	7.5%

[1] Percentage reference dose (% Chronic PAD) = Exposure/Chronic PAD x 100% (as RfD=PAD in this case)

The subgroups listed above are: (1) the U.S. Population (total); (2) those for infants and children; and, (3) the other subgroups (except regions and seasons) for which the percentage of the Chronic PAD occupied is greater than that occupied by the subgroup U.S. Population (total).

iii. *Anticipated residue and percent crop treated information*. The Agency used percent crop treated (PCT) information as follows:

A routine chronic dietary exposure analysis for the wheat hybridizing agent X was based on 0.1% of wheat crop treated, and 0.1% of the cereal grains group (except rice, wild rice, sweet corn, and wheat) and soybeans as rotated crops in fields previously containing wheat treated with chemical X. PCT of 0.1% was based on the petitioner's expectations that up to 35,000 acres of wheat grown for seed will be treated annually, which amounts to 0.05% of the 70,000,000 acres of wheat grown in the United States. The reason for using 0.1% instead of 0.05% is to allow expansion of use if other conditions of registration are satisfied. Before expansion beyond 0.1% is allowed, reevaluation of the dietary exposure may be performed using all available information.

The Agency believes that the three conditions previously discussed have been met. With respect to Condition 1, EPA finds that the PCT information described above for chemical X used on wheat grown for seed is reliable and has a valid basis. Chemical X is a hybridizing agent specific for sterilizing the male organ of the wheat plant in seed production. The majority of seed will be used planting purposes, and not directly as food or feed. Before the petitioner can increase production of product for treatment of greater than 35,000 acres per year, permission from the Agency must be obtained. As to Conditions 2 and 3, regional consumption information and consumption information for significant subpopulations is taken into account through EPA's computer-based model for evaluating the exposure of significant subpopulations including several regional groups. Use of this consumption information in EPA's risk assessment process ensures that EPA's exposure estimate does not understate exposure for any significant subpopulation group and allows the Agency to be reasonably certain that no regional population is exposed to residue levels higher than those estimated by the Agency. Other than the data available through national food consumption surveys, EPA does not have available information on the regional consumption of food to which pesticide X may be applied in a particular area.

2. *Dietary exposure from drinking water*. Azoxystrobin is persistent and mobile. There is no established Maximum Contaminant Level for residues of azoxystrobin in drinking water. No health advisory levels for azoxystrobin in drinking water have been established (EPA Safe Drinking Water Hotline, 1 (800) 426–4791, 4/15/99). EFED has supplied RAB2 with estimates for the concentration of azoxystrobin in surface water based on GENEEC (Generic Estimated Environmental Concentration) modeling and in ground water based on SCI-GROW modeling.

Chronic risk. Estimated environmental concentrations (EECs) using GENEEC for azoxystrobin on bananas, grapes, peaches, peanuts, pecans, tomatoes, and wheat are listed in the SWAT Team Second Interim Report (6/20/97).

The highest EEC for azoxystrobin in surface water (39 µg/L) is from the application of azoxystrobin to grapes. The EEC for ground water is 0.064 µg/L resulting from use on turf. For purposes of risk assessment, the maximum EEC for azoxystrobin in drinking water (39 µg/L) should be used for comparison to the back-calculated human health drinking water levels of comparison (DWLOC) for the chronic (non-cancer) endpoint. These DWLOCs for various population categories are summarized in the following Table 3:

TABLE 3.—DRINKING WATER LEVELS OF COMPARISON FOR CHRONIC EXPOSURE[1]

Population Category[2]	Chronic RfD (mg/kg/day)	Food Exposure (mg/kg/day)	Max. Water Exposure[3] (mg/kg/day)	DWLOC [4,5,6] (µg/L)
U.S. Population (total)	0.18	0.0122 07	0.168	5,900
Females (13+ years, nursing)	0.18	0.0142 10	0.166	5,000
Non-nursing Infants (less than 1 year old)	0.18	0.0194 60	0.161	1,600

[1] Values are expressed to 2 significant figures.
[2] Within each of these categories, the subgroup with the highest food exposure was selected.
[3] Maximum Water Exposure (Chronic) (mg/kg/day) = Chronic RfD (mg/kg/day) - Food Exposure (mg/kg/day).
[4] DWLOC(µg/L) = Max. water exposure (mg/kg/day) x body wt (kg) ÷ (10^{-3} mg/µg) * water consumed daily (L/day).
[5] Default body weights are: General U.S. Population, 70 kg; Males (13+ years old), 70 kg; Females (13+ years old), 60 kg; Other Adult Populations, 70 kg; and, All Infants/Children, 10 kg.
[6] Default daily drinking rates are 2 L/day for adults and 1 L/day for children.

The estimated maximum concentrations of azoxystrobin in surface water and ground water are less than EPA's levels of comparison for azoxystrobin in drinking water as a contribution to chronic aggregate exposure. Therefore, taking into account the present uses and uses proposed in this Section 18 and the fact that GENEEC can substantially overestimate (by up to 3x) true pesticide concentrations in drinking water, EPA concludes with reasonable certainty that residues of azoxystrobin in drinking water (when considered along with other sources of chronic exposure for which EPA has reliable data) would not result in an unacceptable estimate of chronic (non-cancer) aggregate human health risk at this time.

EPA bases this determination on a comparison of estimated average concentrations of azoxystrobin in surface and ground water to back-calculated DWLOCs for azoxystrobin in drinking water. These levels of comparison in drinking water were determined after HED considered all other non-occupational human exposures for which it has reliable data, including all current uses, and the use considered in this action. The estimate of azoxystrobin in surface water is derived from a water quality model that uses conservative assumptions (health-protective) regarding the pesticide transport from the point of application to surface and ground water. Because EPA considers the aggregate risk resulting from multiple exposure pathways associated with a pesticide's uses, levels of comparison in drinking water may vary as those uses change. If new uses are added in the future, EPA will reassess the potential impacts of azoxystrobin in drinking water as a part of the chronic (non-cancer) aggregate risk assessment process.

The Agency lacks sufficient monitoring exposure data to complete a comprehensive dietary exposure analysis and risk assessment for azoxystrobin in drinking water. Because the Agency does not have comprehensive monitoring data, drinking water concentration estimates are made by reliance on simulation or modeling taking into account data on the physical characteristics of azoxystrobin.

The Agency uses the Generic Estimated Environmental Concentration (GENEEC) or the Pesticide Root Zone/ Exposure Analysis Modeling System (PRZM/EXAMS) to estimate pesticide concentrations in surface water and SCI-GROW, which predicts pesticide concentrations in groundwater. In general, EPA will use GENEEC (a tier 1 model) before using PRZM/EXAMS (a tier 2 model) for a screening-level assessment for surface water. The GENEEC model is a subset of the PRZM/ EXAMS model that uses a specific high-end runoff scenario for pesticides. GENEEC incorporates a farm pond scenario, while PRZM/EXAMS incorporate an index reservoir environment in place of the previous pond scenario. The PRZM/EXAMS model includes a percent crop area factor as an adjustment to account for the maximum percent crop coverage within a watershed or drainage basin.

None of these models include consideration of the impact processing (mixing, dilution, or treatment) of raw water for distribution as drinking water would likely have on the removal of pesticides from the source water. The primary use of these models by the Agency at this stage is to provide a coarse screen for sorting out pesticides for which it is highly unlikely that drinking water concentrations would ever exceed human health levels of concern.

Since the models used are considered to be screening tools in the risk assessment process, the Agency does not use estimated environmental concentrations (EECs) from these models to quantify drinking water exposure and risk as a %RfD or %PAD. Instead drinking water levels of comparison (DWLOCs) are calculated and used as a point of comparison against the model estimates of a pesticide's concentration in water. DWLOCs are theoretical upper limits on a pesticide's concentration in drinking water in light of total aggregate exposure to a pesticide in food, and from residential uses. Since DWLOCs address total aggregate exposure to azoxystrobin they are further discussed in the aggregate risk sections below.

3. *From non-dietary exposure*. The term ''residential exposure'' is used in this document to refer to non-occupational, non-dietary exposure (e.g., for lawn and garden pest control, indoor pest control, termiticides, and flea and tick control on pets).

Azoxystrobin is currently registered for use on the following residential non-dietary sites: ornamental turf. The risk assessment was conducted using the following exposure assumptions: Short-term exposure may occur for residential handlers and for postapplication activities. Because the TES Committee (11/12/96) did not select applicable acute dietary or short-term dermal or inhalation endpoints, a short-term risk assessment is not required. No toxicity was observed at the limit dose (1,000 mg/kg body wt/day) in a 21-day dermal study and an acute inhalation study indicated low toxicity. Intermediate-term and chronic exposures are not expected for residential use.

4. *Cumulative exposure to substances with a common mechanism of toxicity*. Section 408(b)(2)(D)(v) requires that, when considering whether to establish, modify, or revoke a tolerance, the Agency consider ''available information'' concerning the cumulative effects of a particular pesticide's residues and ''other substances that have a common mechanism of toxicity.''

EPA does not have, at this time, available data to determine whether azoxystrobin has a common mechanism of toxicity with other substances or how to include this pesticide in a cumulative risk assessment. Unlike other pesticides for which EPA has followed a cumulative risk approach based on a common mechanism of toxicity, azoxystrobin does not appear to produce a toxic metabolite produced by other substances. For the purposes of this tolerance action, therefore, EPA has not assumed that azoxystrobin has a common mechanism of toxicity with other substances. For information regarding EPA's efforts to determine which chemicals have a common mechanism of toxicity and to evaluate the cumulative effects of such chemicals, see the final rule for Bifenthrin Pesticide Tolerances (62 FR 62961, November 26, 1997).

D. Safety Factor for Infants and Children

Safety factor for infants and children—In general. FFDCA section 408 provides that EPA shall apply an additional tenfold margin of safety for infants and children in the case of threshold effects to account for prenatal and postnatal toxicity and the completeness of the data base on toxicity and exposure unless EPA determines that a different margin of safety will be safe for infants and children. Margins of safety are incorporated into EPA risk assessments either directly through use of a margin of exposure (MOE) analysis or through using uncertainty (safety) factors in calculating a dose level that poses no appreciable risk to humans.

E. Aggregate Risks and Determination of Safety

To estimate total aggregate exposure to a pesticide from food, drinking water, and residential uses, the Agency calculates DWLOCs which are used as a point of comparison against the model estimates of a pesticide's concentration in water (EECs). DWLOC values are not regulatory standards for drinking water.

DWLOCs are theoretical upper limits on a pesticide's concentration in drinking water in light of total aggregate exposure to a pesticide in food and residential uses. In calculating a DWLOC, the Agency determines how much of the acceptable exposure (i.e., the PAD) is available for exposure through drinking water e.g., allowable chronic water exposure (mg/kg/day)= cPAD - (average food+ chronic non-dietary, non-occupational exposure). This allowable exposure through drinking water is used to calculate a DWLOC.

A DWLOC will vary depending on the toxic endpoint, drinking water consumption, and body weights. Default body weights and consumption values as used by the USEPA Office of Water are used to calculate DWLOCs: 2L/70 kg (adult male), 2L/60 kg (adult female), and 1L/10 kg (child). Default body weights and drinking water consumption values vary on an individual basis. This variation will be taken into account in more refined screening-level and quantitative drinking water exposure assessments. Different populations will have different DWLOCs. Generally, a DWLOC is calculated for each type of risk assessment used: acute, short-term, intermediate-term, chronic, and cancer.

When EECs for surface water and groundwater are less than the calculated DWLOCs, EPA concludes with reasonable certainty that exposures to azoxystrobin in drinking water (when considered along with other sources of exposure for which EPA has reliable data) would not result in unacceptable levels of aggregate human health risk at this time. Because EPA considers the aggregate risk resulting from multiple exposure pathways associated with a pesticide's uses, levels of comparison in drinking water may vary as those uses change. If new uses are added in the future, EPA will reassess the potential impacts of azoxystrobin on drinking water as a part of the aggregate risk assessment process.

1. *Chronic risk*. Using the conservative TMRC exposure assumptions described in this unit for chronic exposure, EPA has concluded that exposure to azoxystrobin from food will utilize 11.6% of the cPAD for the U.S. population, 2.2% of the cPAD for infant subpopulations at greatest exposure and 12.2% of the cPAD for children subpopulation at greatest exposure. Based the use pattern, chronic residential exposure to residues of the azoxystrobin is not expected. In addition, despite the potential for chronic dietary exposure to azoxystrobin in drinking water, after calculating the DWLOCs and comparing them to conservative model estimated environmental concentrations of azoxystrobin in surface and ground water. EPA does not expect the aggregate exposure to exceed 100% of the cPAD.

2. *Short-term risk*. There are no applicable endpoints for short-term exposure; therefore, a short-term aggregate risk assessment is not required. Intermediate-term exposure is not expected for registered residential uses; therefore, an intermediate-term risk assessment is not required.

Short-term aggregate exposure takes into account residential exposure plus chronic exposure to food and water (considered to be a background exposure level).

Though residential exposure could occur with the use of azoxystrobin, the potential short-term exposures were not aggregated with chronic dietary food and water exposures because the toxic effects are different. Therefore, based on the best available data and current policies, potential risks do not exceed the Agency's level of concern.

3. *Aggregate cancer risk for U.S. population*. The EPA RfD/Peer Review Committee (November 7, 1996) determined that azoxystrobin should be classified as ''Not Likely'' to be a human carcinogen according to the proposed revised Cancer Guidelines. Therefore, a cancer risk assessment is not required.

4. *Determination of safety*. Based on these risk assessments, EPA concludes that there is a reasonable certainty that no harm will result to the general population, and to infants and children from aggregate exposure to azoxystrobin residues.

V. Other Considerations

A. Analytical Enforcement Methodology

An adequate analytical method is available for enforcement of the proposed tolerances. Method RAM 243 (GC/NPD) can be used for the commodities in crop groups 2 and 5. The limit of quantitation for spinach and leaf lettuce was 0.01 ppm and the LOQ for head lettuce was either 0.02 ppm or 0.05 ppm (depending on laboratory). This method has been validated by the Agency's Analytical Chemistry Laboratory and will be submitted to FDA for inclusion in PAM II.

The method may be requested from: Calvin Furlow, PIRIB, IRSD (7502C), Office of Pesticide Programs, Environmental Protection Agency, 1200 Pennsylvania Ave., NW, Washington, DC 20460; telephone number: (703) 305–5229; e-mail address: furlow.calvin@epa.gov.

B. International Residue Limits

There are no CODEX, Canadian, or Mexican Maximum Residue Limits (MRL) for azoxystrobin.

C. Conditions

No special conditions, other than this tolerance are in conjunction with a Section 18 specific exemption.

VI. Conclusion

Therefore, the tolerance is established for residues of azoxystrobin in or on brassica leafy vegetable at 25.0 ppm ppm.

VII. Objections and Hearing Requests

Under section 408(g) of the FFDCA, as amended by the FQPA, any person may file an objection to any aspect of this regulation and may also request a hearing on those objections. The EPA procedural regulations which govern the submission of objections and requests for hearings appear in 40 CFR part 178. Although the procedures in those regulations require some modification to reflect the amendments made to the FFDCA by the FQPA of 1996, EPA will continue to use those procedures, with appropriate adjustments, until the necessary modifications can be made. The new section 408(g) provides essentially the same process for persons to ''object'' to a regulation for an exemption from the requirement of a tolerance issued by EPA under new section 408(d), as was provided in the old FFDCA sections 408 and 409. However, the period for filing objections is now 60 days, rather than 30 days.

A. What Do I Need to Do to File an Objection or Request a Hearing?

You must file your objection or request a hearing on this regulation in accordance with the instructions provided in this unit and in 40 CFR part 178. To ensure proper receipt by EPA, you must identify docket control number OPP–301049 in the subject line on the first page of your submission. All requests must be in writing, and must be mailed or delivered to the Hearing Clerk on or before December 18, 2000, Federal Register].

1. *Filing the request*. Your objection must specify the specific provisions in the regulation that you object to, and the grounds for the objections (40 CFR 178.25). If a hearing is requested, the objections must include a statement of the factual issues(s) on which a hearing is requested, the requestor's contentions on such issues, and a summary of any evidence relied upon by the objector (40 CFR 178.27). Information submitted in connection with an objection or hearing request may be claimed confidential by

marking any part or all of that information as CBI. Information so marked will not be disclosed except in accordance with procedures set forth in 40 CFR part 2. A copy of the information that does not contain CBI must be submitted for inclusion in the public record. Information not marked confidential may be disclosed publicly by EPA without prior notice.

Mail your written request to: Office of the Hearing Clerk (1900), Environmental Protection Agency, 1200 Pennsylvania Ave., NW., Washington, DC 20460. You may also deliver your request to the Office of the Hearing Clerk in Rm. C400, Waterside Mall, 401 M St., SW., Washington, DC 20460. The Office of the Hearing Clerk is open from 8 a.m. to 4 p.m., Monday through Friday, excluding legal holidays. The telephone number for the Office of the Hearing Clerk is (202) 260–4865.

2. *Tolerance fee payment*. If you file an objection or request a hearing, you must also pay the fee prescribed by 40 CFR 180.33(i) or request a waiver of that fee pursuant to 40 CFR 180.33(m). You must mail the fee to: EPA Headquarters Accounting Operations Branch, Office of Pesticide Programs, P.O. Box 360277M, Pittsburgh, PA 15251. Please identify the fee submission by labeling it ''Tolerance Petition Fees.''

EPA is authorized to waive any fee requirement ''when in the judgement of the Administrator such a waiver or refund is equitable and not contrary to the purpose of this subsection.'' For additional information regarding the waiver of these fees, you may contact James Tompkins by phone at (703) 305–5697, by e-mail at tompkins.jim@epa.gov, or by mailing a request for information to Mr. Tompkins at Registration Division (7505C), Office of Pesticide Programs, Environmental Protection Agency, 1200 Pennsylvania Ave., NW., Washington, DC 20460.

If you would like to request a waiver of the tolerance objection fees, you must mail your request for such a waiver to: James Hollins, Information Resources and Services Division (7502C), Office of Pesticide Programs, Environmental Protection Agency, 1200 Pennsylvania Ave., NW., Washington, DC 20460.

3. *Copies for the Docket*. In addition to filing an objection or hearing request with the Hearing Clerk as described in Unit VII.A., you should also send a copy of your request to the PIRIB for its inclusion in the official record that is described in Unit I.B.2. Mail your copies, identified by the docket control number OPP–301049, to: Public Information and Records Integrity Branch, Information Resources and Services Division (7502C), Office of Pesticide Programs, Environmental Protection Agency, 1200 Pennsylvania Ave., NW., Washington, DC 20460. In person or by courier, bring a copy to the location of the PIRIB described in Unit I.B.2. You may also send an electronic copy of your request via e-mail to: opp-docket@epa.gov. Please use an ASCII file format and avoid the use of special characters and any form of encryption. Copies of electronic objections and hearing requests will also be accepted on disks in WordPerfect 6.1/8.0 file format or ASCII file format. Do not include any CBI in your electronic copy. You may also submit an electronic copy of your request at many Federal Depository Libraries.

B. When Will the Agency Grant a Request for a Hearing?

A request for a hearing will be granted if the Administrator determines that the material submitted shows the following: There is a genuine and substantial issue of fact; there is a reasonable possibility that available evidence identified by the requestor would, if established resolve one or more of such issues in favor of the requestor, taking into account uncontested claims or facts to the contrary; and resolution of the factual issues(s) in the manner sought by the requestor would be adequate to justify the action requested (40 CFR 178.32).

VIII. Regulatory Assessment Requirements

This final rule establishes a time-limited tolerance under FFDCA section 408. The Office of Management and Budget (OMB) has exempted these types of actions from review under Executive Order 12866, entitled *Regulatory Planning and Review* (58 FR 51735, October 4, 1993). This final rule does not contain any information collections subject to OMB approval under the Paperwork Reduction Act (PRA), 44 U.S.C. 3501 *et seq.*, or impose any enforceable duty or contain any unfunded mandate as described under Title II of the Unfunded Mandates Reform Act of 1995 (UMRA) (Public Law 104–4). Nor does it require any prior consultation as specified by Executive Order 13084, entitled *Consultation and Coordination with Indian Tribal Governments* (63 FR 27655, May 19, 1998); special considerations as required by Executive Order 12898, entitled *Federal Actions to Address Environmental Justice in Minority Populations and Low-Income Populations* (59 FR 7629, February 16, 1994); or require OMB review or any Agency action under Executive Order 13045, entitled *Protection of Children from Environmental Health Risks and Safety Risks* (62 FR 19885, April 23, 1997). This action does not involve any technical standards that would require Agency consideration of voluntary consensus standards pursuant to section 12(d) of the National Technology Transfer and Advancement Act of 1995 (NTTAA), Public Law 104–113, section 12(d) (15 U.S.C. 272 note). Since tolerances and exemptions that are established on the basis of a FIFRA section 18 petition under FFDCA section 408, such as the tolerance/exemption in this final rule, do not require the issuance of a proposed rule, the requirements of the Regulatory Flexibility Act (RFA) (5 U.S.C. 601 *et seq.*) do not apply. In addition, the Agency has determined that this action will not have a substantial direct effect on States, on the relationship between the national government and the States, or on the distribution of power and responsibilities among the various levels of government, as specified in Executive Order 13132, entitled *Federalism* (64 FR 43255, August 10, 1999). Executive Order 13132 requires EPA to develop an accountable process to ensure ''meaningful and timely input by State and local officials in the development of regulatory policies that have federalism implications.'' ''Policies that have federalism implications'' is defined in the Executive Order to include regulations that have ''substantial direct effects on the States, on the relationship between the national government and the States, or on the distribution of power and responsibilities among the various levels of government.'' This final rule directly regulates growers, food processors, food handlers and food retailers, not States. This action does not alter the relationships or distribution of power and responsibilities established by Congress in the preemption provisions of FFDCA section 408(n)(4).

IX. Submission to Congress and the Comptroller General

The Congressional Review Act, 5 U.S.C. 801 *et seq.*, as added by the Small Business Regulatory Enforcement Fairness Act of 1996, generally provides that before a rule may take effect, the agency promulgating the rule must submit a rule report, which includes a copy of the rule, to each House of the Congress and to the Comptroller General of the United States. EPA will submit a report containing this rule and other required information to the U.S. Senate, the U.S. House of Representatives, and the Comptroller General of the United States prior to publication of this final rule in the **Federal Register**. This final

rule is not a ''major rule'' as defined by 5 U.S.C. 804(2).

List of Subjects in 40 CFR Part 180

Environmental protection, Administrative practice and procedure, Agricultural commodities, Pesticides and pests, Reporting and recordkeeping requirements.

Dated: September 28, 2000.

James Jones,

Director, Registration Division, Office of Pesticide Programs.

Therefore, 40 CFR chapter I is amended as follows:

PART 180— [AMENDED]

1. The authority citation for part 180 continues to read as follows:

Authority: 21 U.S.C. 321(q), (346a) and 371.

2. Section 180.507 is amended by alphabetically adding commodities to the table in paragraph (b) to read as follows:

§ 180.507 Azoxystrobin; tolerances for residues.

* * * * *

(b)* * *

Commodity	Parts per million	Expiration/Revocation Date
* * * * *		
Brassica leafy vegetable	25.0	12/31/01
* * * * *		

* * * * *

[FR Doc. 00–26638 Filed 10–16–00; 8:45 am]

BILLING CODE 6560–50–S

FEDERAL EMERGENCY MANAGEMENT AGENCY

44 CFR Part 64

[Docket No. FEMA–7736]

List of Communities Eligible for the Sale of Flood Insurance

AGENCY: Federal Emergency Management Agency (FEMA).

ACTION: Final rule.

SUMMARY: This rule identifies communities participating in the National Flood Insurance Program (NFIP). These communities have applied to the program and have agreed to enact certain floodplain management measures. The communities' participation in the program authorizes the sale of flood insurance to owners of property located in the communities listed.

EFFECTIVE DATES: The dates listed in the third column of the table.

ADDRESSES: Flood insurance policies for property located in the communities listed can be obtained from any licensed property insurance agent or broker serving the eligible community, or from the NFIP at: Post Office Box 6464, Rockville, MD 20849, (800) 638–6620.

FOR FURTHER INFORMATION CONTACT: Donna M. Dannels, Branch Chief, Policy, Assessment and Outreach Division, Mitigation Directorate, 500 C Street SW., room 411, Washington, DC 20472, (202) 646–3098.

SUPPLEMENTARY INFORMATION: The NFIP enables property owners to purchase flood insurance which is generally not otherwise available. In return, communities agree to adopt and administer local floodplain management measures aimed at protecting lives and new construction from future flooding. Since the communities on the attached list have recently entered the NFIP, subsidized flood insurance is now available for property in the community.

In addition, the Associate Director of the Federal Emergency Management Agency has identified the special flood hazard areas in some of these communities by publishing a Flood Hazard Boundary Map (FHBM) or Flood Insurance Rate Map (FIRM). The date of the flood map, if one has been published, is indicated in the fourth column of the table. In the communities listed where a flood map has been published, Section 102 of the Flood Disaster Protection Act of 1973, as amended, 42 U.S.C. 4012(a), requires the purchase of flood insurance as a condition of Federal or federally related financial assistance for acquisition or construction of buildings in the special flood hazard areas shown on the map.

The Associate Director finds that the delayed effective dates would be contrary to the public interest. The Associate Director also finds that notice and public procedure under 5 U.S.C. 553(b) are impracticable and unnecessary.

National Environmental Policy Act. This rule is categorically excluded from the requirements of 44 CFR Part 10, Environmental Considerations. No environmental impact assessment has been prepared.

Regulatory Flexibility Act. The Associate Director certifies that this rule will not have a significant economic impact on a substantial number of small entities in accordance with the Regulatory Flexibility Act, 5 U.S.C. 601 *et seq.*, because the rule creates no additional burden, but lists those communities eligible for the sale of flood insurance.

Regulatory Classification. This final rule is not a significant regulatory action under the criteria of section 3(f) of Executive Order 12866 of September 30, 1993, Regulatory Planning and Review, 58 FR 51735.

Paperwork Reduction Act. This rule does not involve any collection of information for purposes of the Paperwork Reduction Act, 44 U.S.C. 3501 *et seq.*

Executive Order 12612, Federalism. This rule involves no policies that have federalism implications under Executive Order 12612, Federalism, October 26, 1987, 3 CFR, 1987 Comp., p. 252.

Executive Order 12778, Civil Justice Reform. This rule meets the applicable standards of section 2(b)(2) of Executive Order 12778, October 25, 1991, 56 FR 55195, 3 CFR, 1991 Comp., p. 309.

List of Subjects in 44 CFR Part 64.

Flood insurance, Floodplains.

Accordingly, 44 CFR part 64 is amended as follows:

PART 64—[AMENDED]

1. The authority citation for Part 64 continues to read as follows:

Authority: 42 U.S.C. 4001 *et seq.*, Reorganization Plan No. 3 of 1978, 3 CFR, 1978 Comp., p. 329; E.O. 12127, 44 FR 19367, 3 CFR, 1979 Comp., p. 376.

§ 64.6 [Amended]

2. The tables published under the authority of § 64.6 are amended as follows:

State/location	Community No.	Effective date of eligibility	Current effective map date
NEW ELIGIBLES—Emergency Program			
North Carolina: Norwood, town of, Stanley County.	370509	May 17, 2000	
Texas:			
Jones County, unincorporated areas	480884	June 15, 2000	
Lamb County, unincorporated areas	480893	.....do.	
Navarro County, unincorporated areas.	480950	.....do.	December 27, 1977.
Riverside, city of, Walker County	481044	June 26, 2000	November 19, 1976.
Georgia: Candler County, unincorporated areas.	130574	June 27, 2000	
North Carolina: Aulander, town of, Bertie County.	370018	.....do.	
South Carolina: Sycamore, town of, Allendale County.	450011	.....do.	
Wyoming: Basin, town of, Big Horn County.	560069	June 30, 2000	
NEW ELIGIBLES—Regular Program			
Texas: Krugerville, city of, Denton County	481661	June 6, 2000	April 2, 1997.
Minnesota: Becker, city of, Sherburne County [1].	270710	June 12, 2000	May 4, 2000.
Texas: Mustang Ridge, city of, Travis and Caldwell Counties [2].	481687	June 15, 2000	May 5, 2000.
Georgia:			
Brooks, town of, Fayette County	130430	June 27, 2000	March 18, 1996.
Colquitt County, unincorporated areas.	130058	.....do	July 16, 1997.
North Carolina:			
Clemmons, village of, Forsyth County [3].	370531	.....do	October 20, 1998.
Kernersville, town of, Forsyth County	370309	.....do	October 20, 1998.
St. James, town of, Brunswick County [4].	370530	.....do	August 18, 1992.
REINSTATMENTS			
Iowa: Clutier, city of, Tama County	190514	October 6, 1976 Emer	August 19, 1985.
		August 19, 1985 Reg	
		June 3, 1988 Susp	
		June 12, 2000 Rein	
Virginia: Nottoway County, unincorporated areas.	510307	May 7, 1975 Emer	September 1, 1987.
		September 1, 1987 Reg	
		September 1, 1987 Susp	
		June 27, 2000 Rein	
REGULAR PROGRAM CONVERSIONS			
Region I			
New Hampshire:			
Brentwood, town of, Rockingham County.	330125	May 4, 2000 Suspension Withdrawn	May 4, 2000.
Charlestown, town of, Sullivan County.	330153	.....do	Do.
Walpole, town of, Cheshire County ...	330027	.....do	Do.
Region II			
New York:			
Cooperstown, village of, Otsego County.	360665	.....do	Do.
Greenwich, village of, Washington County.	360887	.....do	Do.
New Bremen, town of, Lewis County	360373	.....do	Do.
New York Mills, village of, Oneida County.	360537	.....do	Do.
Whitesboro, village of, Oneida County.	360566	.....do	Do.
Whitestown, town of, Oneida County	360567	.....do	Do.
Yorkville, village of, Oneida County ..	360568	.....do	Do.
Region III			
West Virginia: Grant County, unincorporated areas.	540038	.....do	Do.
Region IV			
North Carolina: Spring Lake, town of, Cumberland County.	370484	.....do	Do.

State/location	Community No.	Effective date of eligibility	Current effective map date
Region V			
Minnesota:			
Elk River, city of, Sherburne County	270436	.....do	Do.
Sherburne County, unincorporated areas.	270435	.....do	Do.
Region X			
Washington: Aberdeen, city of, Grays Harbor County.	530058	.....do	Do.
Region II			
New York:			
Clarkstown, town of, Rockland County.	360679	May 18, 2000 Suspension Withdrawn.	May 18, 2000.
Painted Post, village of, Steuben County.	360779	.....do	Do.
Region III			
West Virginia:			
Logan County, unincorporated areas	545536	.....do	Do.
Morgan County, unincorporated areas.	540144	.....do	Do.
Region V			
Wisconsin: Crawford County, unincorporated areas.	555551	.....do	Do.

[1] The City of Becker adopted Sherburne County's (CID #270435) Flood Insurance Rate Map (FIRM), dated May 4, 2000, panels 0220E, 0240E, 0310E, 0330E and 0335E.

[2] The City of Mustang Ridge adopted Travis County's (CID #481026) FIRM, dated June 5, 1997, panels 0140E, 0145E, 0180E, 0185E and the FIRM for Caldwell County (CID #480094), panel 0025C.

[3] The Village of Clemmons adopted Forsyth County's (CID #375349) FIRM, dated October 20, 1998, panel 242H.

[4] The Town of St. James adopted Brunswick County's (CID #370295) FIRM, dated August 18 1992, panels 360C and 380E.

Code for reading third column: Emerg.—Emergency; Reg.—Regular; Rein.—Reinstatement; Susp.—Suspension; With.—Withdrawn; NSFHA—Non Special Flood Hazard Area.

(Catalog of Federal Domestic Assistance No. 83.100, ''Flood Insurance.'')

Issued: September 26, 2000.

Michael J. Armstrong,

Associate Director for Mitigation.

[FR Doc. 00–26602 Filed 10–16–00; 8:45 am]

BILLING CODE 6718–05–P

FEDERAL EMERGENCY MANAGEMENT AGENCY

44 CFR Part 64

[Docket No. FEMA–7745]

Suspension of Community Eligibility

AGENCY: Federal Emergency Management Agency, FEMA.

ACTION: Final rule.

SUMMARY: This rule identifies communities, where the sale of flood insurance has been authorized under the National Flood Insurance Program (NFIP), that are suspended on the effective dates listed within this rule because of noncompliance with the floodplain management requirements of the program. If the Federal Emergency Management Agency (FEMA) receives documentation that the community has adopted the required floodplain management measures prior to the effective suspension date given in this rule, the suspension will be withdrawn by publication in the **Federal Register**.

EFFECTIVE DATES: The effective date of each community's suspension is the third date (''Susp.'') listed in the third column of the following tables.

ADDRESSES: If you wish to determine whether a particular community was suspended on the suspension date, contact the appropriate FEMA Regional Office or the NFIP servicing contractor.

FOR FURTHER INFORMATION CONTACT: Mike Robinson, Branch Chief, Policy, Assessment and Outreach Division, Mitigation Directorate, 500 C Street, SW., Room 411, Washington, DC 20472, (202) 646–3098.

SUPPLEMENTARY INFORMATION: The NFIP enables property owners to purchase flood insurance which is generally not otherwise available. In return, communities agree to adopt and administer local floodplain management aimed at protecting lives and new construction from future flooding. Section 1315 of the National Flood Insurance Act of 1968, as amended, 42 U.S.C. 4022, prohibits flood insurance coverage as authorized under the National Flood Insurance Program, 42 U.S.C. 4001 *et seq.*, unless an appropriate public body adopts adequate floodplain management measures with effective enforcement measures. The communities listed in this document no longer meet that statutory requirement for compliance with program regulations, 44 CFR part 59 *et seq.* Accordingly, the communities will be suspended on the effective date in the third column. As of that date, flood insurance will no longer be available in the community. However, some of these communities may adopt and submit the required documentation of legally enforceable floodplain management measures after this rule is published but prior to the actual suspension date. These communities will not be suspended and will continue their eligibility for the sale of insurance. A notice withdrawing the suspension of the communities will be published in the **Federal Register**.

In addition, the Federal Emergency Management Agency has identified the special flood hazard areas in these communities by publishing a Flood Insurance Rate Map (FIRM). The date of the FIRM if one has been published, is indicated in the fourth column of the table. No direct Federal financial assistance (except assistance pursuant to the Robert T. Stafford Disaster Relief and Emergency Assistance Act not in connection with a flood) may legally be

provided for construction or acquisition of buildings in the identified special flood hazard area of communities not participating in the NFIP and identified for more than a year, on the Federal Emergency Management Agency's initial flood insurance map of the community as having flood-prone areas (section 202(a) of the Flood Disaster Protection Act of 1973, 42 U.S.C. 4106(a), as amended). This prohibition against certain types of Federal assistance becomes effective for the communities listed on the date shown in the last column. The Associate Director finds that notice and public comment under 5 U.S.C. 553(b) are impracticable and unnecessary because communities listed in this final rule have been adequately notified.

Each community receives a 6-month, 90-day, and 30-day notification addressed to the Chief Executive Officer that the community will be suspended unless the required floodplain management measures are met prior to the effective suspension date. Since these notifications have been made, this final rule may take effect within less than 30 days.

National Environmental Policy Act. This rule is categorically excluded from the requirements of 44 CFR Part 10, Environmental Considerations. No environmental impact assessment has been prepared.

Regulatory Flexibility Act. The Associate Director has determined that this rule is exempt from the requirements of the Regulatory Flexibility Act because the National Flood Insurance Act of 1968, as amended, 42 U.S.C. 4022, prohibits flood insurance coverage unless an appropriate public body adopts adequate floodplain management measures with effective enforcement measures. The communities listed no longer comply with the statutory requirements, and after the effective date, flood insurance will no longer be available in the communities unless they take remedial action.

Regulatory Classification. This final rule is not a significant regulatory action under the criteria of section 3(f) of Executive Order 12866 of September 30, 1993, Regulatory Planning and Review, 58 FR 51735.

Paperwork Reduction Act. This rule does not involve any collection of information for purposes of the Paperwork Reduction Act, 44 U.S.C. 3501 *et seq.*

Executive Order 12612, Federalism. This rule involves no policies that have federalism implications under Executive Order 12612, Federalism, October 26, 1987, 3 CFR, 1987 Comp., p. 252.

Executive Order 12778, Civil Justice Reform. This rule meets the applicable standards of section 2(b)(2) of Executive Order 12778, October 25, 1991, 56 FR 55195, 3 CFR, 1991 Comp., p. 309.

List of Subjects in 44 CFR Part 64

Flood insurance, Floodplains.

Accordingly, 44 CFR part 64 is amended as follows:

PART 64—[AMENDED]

1. The authority citation for Part 64 continues to read as follows:

Authority: 42 U.S.C. 4001 *et seq.*; Reorganization Plan No. 3 of 1978, 3 CFR, 1978 Comp., p. 329; E.O. 12127, 44 FR 19367, 3 CFR, 1979 Comp., p. 376.

§ 64.6 [Amended]

2. The tables published under the authority of § 64.6 are amended as follows:

64.6 LIST OF ELIGIBLE COMMUNITIES

State and Location	Community No.	Effective date authorization/cancellation of sale of flood insurance in community	Current effective map date	Date certain Federal assistance no longer available in special flood hazard areas
Region III				
Delaware:				
Ardentown, village of, New Castle County.	100058	January 28, 1997; Reg., October 6, 2000; Susp.	10–06–00	10–06–00
Delaware City, city of, New Castle County.	100022	December 17, 1973; Emerg.; February 16, 1977; Reg. October 6, 2000.	do	do.
New Castle, city of, New Castle County	100026	June 6, 1970, Emerg.; December 26, 1975; Reg. October 6, 2000.	do	do.
New Castle County, unincorporated areas.	105085	June 6, 1970, Emerg.; December 3, 1971; Reg. October 6, 2000.	do	do.
Wilmington, city of, New Castle County	100028	December 19, 1973, Emerg.; May 2, 1977, Reg.; October 6, 2000.	do	do.
Pennsylvania:				
Blooming Grove, township of, Pike County.	421962	December 2, 1976, Emerg.; October 18, 1988, Reg.; October 6, 2000.	do	do.
Delaware, township of, Pike County	421963	September 10, 1975, Emerg.; December 4, 1985, Reg.; October 6, 2000.	do	do.
Dingman, township of, Pike County	421964	March 6, 1979, Emerg.; December 4, 1985; Reg. October 6, 2000.	do	do.
Greene, township of, Pike County	421965	August 6, 1975, Emerg.; October 18, 1988, Reg. October 6, 2000.	do	do.
Lackawaxen, township of, Pike County	421966	July 7, 1975, Emerg.; August 4, 1988; Reg. October 6, 2000.	do	do.
Lehman, township of, Pike County	421967	February 3, 1976, Emerg.; June 19, 1989; Reg. October 6, 2000.	do	do.
Matamoras, borough of, Pike County	420758	October 28, 1975, Emerg.; January 5, 1989; Reg. October 6, 2000.	do	do.
Milford, borough of, Pike County	420759	July 23, 1975, Emerg.; June 1, 1989; Reg. October 6, 2000.	do	do.
Milford, township of, Pike County	422642	March 11, 1976, Emerg.; December 4, 1985; Reg. October 6, 2000.	do	do.

64.6 LIST OF ELIGIBLE COMMUNITIES—Continued

State and Location	Community No.	Effective date authorization/cancellation of sale of flood insurance in community	Current effective map date	Date certain Federal assistance no longer available in special flood hazard areas
Palmyra, township of, Pike County	421968	May 20, 1981, Emerg.; November 19, 1982; Reg. October 6, 2000.	.....do	.....do.
Porter, township of, Pike County	422500	August 17, 1979, Emerg.; October 15, 1985; Reg. October 6, 2000.	.....do	.....do.
Shohola, township of, Pike County	421969	August 17, 1975, Emerg.; July 15, 1988; Reg. October 6, 2000.	.....do	.....do.
Westfall, township of, Pike County	421970	July 30, 1975, Emerg.; February 2, 1989; Reg. October 6, 2000.	.....do	.....do.
South Buffalo, township of, Armstrong County.	421210	April 17, 1975, Emerg.; June 18, 1987; Reg. October 6, 2000.	.....do	.....do.
Region IV				
North Carolina:				
Oakboro, town of, Stanly County	370493	July 9, 1997, Emerg.; October 6, 2000; Reg. October 6, 2000.	.....do	.....do.
Region V				
Ohio:				
Harbor View, village of, Lucas County	390702	October 8, 1976, Emerg.; May 25, 1978; Reg. October 6, 2000.	.....do	.....do.
Lucas County, unincorporated areas	390359	March 9, 1977, Emerg.; March 16, 1983; Reg. October 6, 2000.	.....do	.....do.
Maumee, city of, Lucas County	390360	July 25, 1975; Emerg.; March 28, 1980; Reg. October 6, 2000.	.....do	.....do.
Oregon, city of, Lucas County	390361	March 16, 1973, Emerg.; March 15, 1978; Reg. October 6, 2000.	.....do	.....do.
Ottawa Hills, village of, Lucas County	390362	October 24, 1975, Emerg.; June 4, 1980; Reg. October 6, 2000.	.....do	.....do.
Sylvania, city of, Lucas County	390364	February 18, 1972, Emerg.; July 5, 1977; Reg. October 6, 2000.	.....do	.....do.
Toledo, city of, Lucas County	395373	December 18, 1970; Emerg.; June 4, 1980; Reg. October 6, 2000.	.....do	.....do.
Waterville, village of, Lucas County	390637	April 9, 1975; Emerg.; January 2, 1981; Reg. October 6, 2000.	.....do	.....do.
Whitehouse, village of, Lucas County	390639	August 27, 1975; Emerg.; May 19, 1981; Reg. October 6, 2000.	.....do	.....do.
Region X				
Washington:				
North Bonneville, city of, Skamania County.	530256	January 19, 1976, Emerg.; May 28, 1984; Reg. October 6, 2000.	.....do	.....do.

Code for reading third column: Emerg.—Emergency; Reg.—Regular; Susp.—Suspension.

Dated: October 3, 2000.

Michael J. Armstrong,

Associate Director for Mitigation.

[FR Doc. 00–26603 Filed 10–16–00; 8:45 am]

BILLING CODE 6718–05–P

Proposed Rules

Federal Register
Vol. 65, No. 201
Tuesday, October 17, 2000

This section of the FEDERAL REGISTER contains notices to the public of the proposed issuance of rules and regulations. The purpose of these notices is to give interested persons an opportunity to participate in the rule making prior to the adoption of the final rules.

NUCLEAR REGULATORY COMMISSION

10 CFR Part 140

[Docket No. PRM–140–1]

RIN 3150–AB01

Criteria for an Extraordinary Nuclear Occurrence; Withdrawal of Proposed Rule and Denial of Petition for Rulemaking Submitted by the Public Citizen Litigation Group and Critical Mass Energy Project

AGENCY: Nuclear Regulatory Commission.

ACTION: Withdrawal of a proposed rule and denial of a petition for rulemaking.

SUMMARY: The Nuclear Regulatory Commission (NRC) is withdrawing a proposed rule that would have amended regulations concerning the criteria for an extraordinary nuclear occurrence (ENO) and is denying a petition for rulemaking (PRM–140–1) submitted by the Public Citizen Litigation Group and the Critical Mass Energy Project on this matter. This action is taken because the Commission has determined that the current criteria for determining that an ENO has occurred are adequate and are consistent with the intent of Congress, and that none of the options in the proposed rule is acceptable.

ADDRESSES: Copies of the petition for rulemaking, the public comments received, and the NRC's letters to the petitioners are available for public inspection or copying for a fee in the NRC Public Document Room, located at One White Flint North, 11555 Rockville Pike (first floor), Rockville, Maryland. These documents are also available at the NRC's rulemaking website at *http://www.ruleform.llnl.gov.*

FOR FURTHER INFORMATION CONTACT: Harry S. Tovmassian, Office of Nuclear Reactor Regulation, U.S. Nuclear Regulatory Commission, Washington, DC 20555–0001; 301–415–3092 (email HST@NRC.GOV).

SUPPLEMENTARY INFORMATION:

The Petition

By letter dated July 24, 1979, the Public Citizen Litigation Group and the Critical Mass Energy Project petitioned the NRC to take two actions pertaining to a determination whether events at nuclear reactors are ENOs within the meaning of 10 CFR 140.81. The petition was submitted on behalf of five individuals who were residents of Middletown, Pennsylvania, at the time of the March 28, 1979, accident at the Three Mile Island, Unit 2, nuclear reactor (TMI–2), and who claimed that they were harmed by that accident.

The petitioners' first request was that the NRC make a determination that the March 28, 1979, accident at TMI–2 was an ENO, within the meaning of 10 CFR 140.81. The NRC treated this portion of the petition as a response to its request for public comment on its July 23, 1979, **Federal Register** notice (44 FR 50419) of its decision to initiate ''the making of a determination as to whether the recent accident at TMI–2 constitutes an extraordinary nuclear occurrence.'' On April 23, 1980 (45 FR 27593), the NRC published its finding that the accident at TMI–2 was not an ENO. That action constituted the Commission's denial of the petitioners' request for NRC to determine that the TMI–2 accident was an ENO.

The petitioners further requested that, regardless of its finding on the TMI–2 accident, the Commission alter or amend the criteria it uses for making a determination that an event is an ENO.

Basis for Request

If the Commission determines that a particular accident is an ENO, persons indemnified under the Price-Anderson Act (Section 170.n.1.) of the Atomic Energy Act of 1954, as amended (AEA), (42 U.S.C. 2210n(1)) waive certain legal defenses. Current NRC requirements in 10 CFR 140.81(b)(3) establish a two-part test for making a determination that an accident at a nuclear reactor or at a plutonium processing or fuel fabrication plant constitutes an ENO. This two-part test is specifically contemplated by Section 11.j. of the AEA. Section 11.j. defines an ENO as an event: (1) Causing an offsite discharge of certain radioactive material or offsite radiation levels that are deemed to be substantial; and (2) that has resulted in, or probably will result in, substantial damages to persons or property offsite. Thus, applying the criteria specified in 10 CFR 140.84, the NRC first must find that a substantial offsite discharge of radioactive material has occurred or a substantial offsite radiation level has resulted. Second, the NRC must make a finding that substantial damages to persons or property offsite have been or probably will be incurred. If both findings are made, the Commission then must find that the event is an ENO.

With respect to their first request, the petitioners cite certain occurrences as the basis for their belief that the TMI–2 accident should be deemed an ENO: the evacuation of area residents with the concomitant harm to area businesses, large initial payments to victims, lawsuits filed, and radiological releases.

In support of their second request that the Commission change the criteria for making a determination that an event is an ENO, the petitioners state that the Joint Committee on Atomic Energy (JCAE) ''established that the purpose of designating certain accidents as extraordinary nuclear occurrences is to distinguish a serious accident from an event in which nothing untoward or unusual occurred in the conduct of nuclear activities.[1] The petitioners assert that the NRC has the power and discretion to make the definition of an ENO responsive to the circumstances and needs of the public. Also, according to the petitioners, accidents of far less consequence than the one at TMI–2 could be designated as ENOs in conformity with the legislative intent of the Price-Anderson Act, as amended. The petitioners believe that it is appropriate and necessary that the criteria for the determination of an ENO be revised, altered, or amended to respond effectively to those circumstances and demonstrated needs.

Commission Response to Petition

On July 23, 1979 (44 FR 43128), the NRC published a notice in the **Federal Register** of its intent to make a determination as to whether the TMI–2 accident was an ENO. A notice of the filing of the petition from the Public Citizen Litigation Group and the Critical Mass Energy Project was published in the **Federal Register** on August 28, 1979 (44 FR 50419). The notice stated that the NRC intended to treat the petitioners'

[1] William B. Schultz, et al., Public Citizen Litigation Group and Critical Mass Energy Project, Petition for Rulemaking, July 24, 1979, p. 10.

first request (to find the TMI–2 accident an ENO) as a response to its request for public comment on its July 1979 notice. The notice further stated that the petitioners' second request (to change the criteria for an ENO finding) would be treated as a petition for rulemaking. Both the July 1979 and the August 1979 notices invited interested persons to submit written comments or suggestions.

Petitioners' First Request

The NRC considered comments on the petitioner's first request and in response to its July 1979 notice. For the reasons stated in its of April 23, 1980, **Federal Register** notice (45 FR 27590), the Commission determined that the March 28, 1979, accident at TMI–2 was not an ENO. Therefore, the petitioners' first request was denied.

Petitioners' Second Request

One comment was received on the second request, from an official of a nuclear utility. The commenter stated that the current criteria for determining that an accident was an ENO were consistent with the intent of Congress that the waiver of certain legal defenses triggered by an ENO determination be limited to incidents resulting in significant injury or loss. The commenter also stated that lowering the threshold for an ENO would lead to higher premiums for insurance coverage and could at some point endanger the availability of this coverage.

Although the Commission agreed with the commenter that the existing ENO criteria are consistent with the intent of Congress, it decided that these criteria should be reexamined because of difficulties in applying them after the TMI–2 accident. The primary difficulties cited stemmed from the fact that: (1) One criterion is based on ''objective clinical evidence of radiation injury''; however, tests for evidence of such injury are not conclusive; and (2) monetary damages were difficult, if not impossible, to evaluate accurately in a timely manner (e.g., lower property values, business losses, evacuation costs). The Commission also cited a third difficulty with the existing ENO determination criteria that did not relate to problems encountered in the TMI–2 determination (i.e., the existing criteria are numerically inconsistent with the Environmental Protection Agencies (EPA) Protective Action Guidelines (PAG)).

Another factor that influenced the Commission's decision to reevaluate the ENO determination criteria was that when Congress first enacted the waiver of defenses provisions of the Price-Anderson Act, as amended, the conventional belief was that an accident at a nuclear facility would be catastrophic with large releases of radioactive material in a short time. The accident at TMI–2 suggested that a more slowly developing accident could be catastrophic enough to be considered an ENO. Thus, the Commission decided that it would be worthwhile to examine whether the criteria it uses to determine whether an accident is an ENO adequately address a broad range of accident scenarios.

Proposed Rule

On April 9, 1985 (50 FR 13978), the Commission published proposed amendments to 10 CFR Part 140 that posed three options that were under consideration for revised criteria for making an ENO determination, and solicited public comment on these options. These options used estimates of offsite doses and ground contamination as indicators of ''substantial releases.'' As to ''substantial damages,'' the options avoided the measurement problems encountered in applying the present criteria by focusing on costs, which can be readily counted or estimated. The dose limits for ''substantial releases'' were set at values in the range of occupational dose limits but substantially above the doses to the general public expected from the normal operation of NRC-licensed facilities. Like the existing criteria, Options 1 and 2 had separate criteria for substantial discharges of radioactive material or substantial radiation levels offsite.

Option 1 would modify § 140.84(a) to provide that a finding of a substantial discharge of radioactive material or substantial radiation level offsite should be based on a determination ''that one or more persons offsite have been or probably will be exposed to radiation or radioactive materials that would result in estimated doses'' in excess of certain specified limits. Option 2 had the same dose limits of Option 1 but specified that the finding must be that any of the doses ''were or could have been received by a person or persons located on or near any site boundary throughout the duration of the accident.''

Options 1 and 2 also differed with respect to the threshold for ''substantial damage'' to persons or property offsite. One of the thresholds in Option 1 replaced the existing ''substantial damage'' threshold of ''objective clinical evidence of physical injury from exposure'' with a dose-equivalent in the range that would produce symptoms of radiation sickness (i.e., 100 rads) in five or more exposed persons. Option 2 had neither the current ''objective clinical evidence of physical injury'' threshold nor the Option 1 threshold of a high dose to a few people. The Option 2 threshold was that a ''calculated collective dose'' (i.e., 100,000 person-rem) has been delivered within a 50-mile radius during the course of an accident. Both options replaced the present reference to the monetary value of property damage in Criterion II of the existing rule with effects that could be readily assessed within a relatively short period of time after an accident. Such effects include tax assessments, the number of people unemployed, and the number of people evacuated.

Option 3 departs from the two-part test required in the current criteria and the other options. Rather than requiring a Commission finding that the event resulted or probably would result in monetary damages exceeding certain thresholds, this option called for identifying conditions which had led or could lead to injury or damages. This option specified one set of criteria for substantial releases and levels of radiation offsite such that substantial injuries or substantial damages have resulted or will probably result. These criteria were expressed in terms of an integrated air dose that could be received by an individual over a 24-hour period in excess of 10 rads, or radioactive contamination levels offsite at which real and personal property are rendered unfit for normal use.

Public Comments on the Proposed Rule

The Commission received 27 letters commenting on the proposed rule. Although some commenters expressed their views about the merits of the various options proposed, there was no preponderance of support by the commenters for any of the options.

Ten commenters expressed an opinion on whether the criteria for making a determination that an ENO had occurred should be changed. Two commenters recommended changing the criteria. The Illinois Department of Nuclear Safety said that it did not believe that the two-pronged process of declaring a significant release and then determining that substantial damages were sustained was necessary and agreed with then-NRC Commissioner Bernthal's recommendation to use a single-criterion method. The commenter further stated that the existing process was complicated and time consuming and had inherent problems regarding accuracy and subjectivity but gave no rationale for these views. The Mississippi State Department of Health said that it favored Option 3 and that any of the options were more acceptable

than the existing rule but did not give a basis for this view.

Eight commenters, representing approximately 21 separate entities,[2] recommended not changing the criteria. (Some commenters submitted the consolidated comments from other entities; other commenters endorsed these consolidated comments and submitted additional comments of their own.) The eight commenters stated that the existing ENO criteria were adequate and that no changes were required. Some commenters pointed out that the NRC's difficulties in applying the ENO criteria to the TMI–2 accident arose not from the criteria, but from the fact that the accident was not serious enough to meet the statutory requirements of substantial offsite releases and substantial offsite damages. Some commenters also pointed out that no change in the regulatory criteria would relieve the Commission of the statutory obligation to determine whether both the offsite release and the offsite damages were substantial, even if such a determination proves to be difficult on occasion.

Several commenters who opposed changing the criteria stated that the NRC had not adequately justified reducing the threshold for a substantial release finding from 20 rem to 5 rem. They asserted that this reduction would increase the likelihood that an event would be declared an ENO.

Some commenters also questioned the NRC rationale for changing the criteria to be consistent with the EPA PAGs. According to the commenters, these guidelines are intended for emergency planning purposes and to protect the population at risk from the onset of release of radioactivity; they were not intended as baseline criteria for ENO determinations.

Some commenters who opposed changing the criteria stated that the reduction of the dose level to sustain a finding of a substantial offsite release of radioactivity to 5 rem was inconsistent with the intent of Congress, and that the proposed rule would permit the Commission to define as an ENO an event near the range of radiological exposures from anticipated occurrences and involving doses within or near permissible limits. One commenter quoted the authors of the ''Joint Committee on Atomic Energy's Report (JAEC) Accompanying Bills to Amend Price-Anderson Act to Provide Immediate Financial Assistance to Claimants and to Require Waiver of Defenses:'' ''[T]here is no pressing need to invoke the mechanisms and procedures in situations which are not exceptional and which can well be taken care of by the traditional system of tort law.''[3]

Another commenter gave the following opinion:

> These proposed reductions would lower the existing dose levels to values not much different from the current 10 CFR 20 limits. We believe that these level reductions seriously lower the threshold of an ENO and that the original purpose may be somewhat diminished by the adoption of these reduced limits. In the original conception of 10 CFR 140, ''Congress intended that the waiver of defenses be limited to incidents resulting in significant injury or loss'' and that current ENO criteria should be consistent with this. It is possible that the seriousness or significance of an ENO may be lessened somewhat by these lower criteria.[4]

Another commenter expressed the same view:

> The legislative history is clear that Congress, in amending the Atomic Energy Act to incorporate the ENO concept, wished to establish a threshold to prevent the waiver of defenses provision from applying in cases ''where nothing untoward or unusual has occurred in the conduct of nuclear activities.''[5]

Discussion

The Commission finds that the arguments for retaining the existing criteria are persuasive. The Commission intended to simplify the application of the ENO criteria, but is now convinced by arguments of the public commenters that none of these options would accomplish this intent without undermining the purposes for which the ENO criteria were established.

In addition, section 11.j. of the AEA indicates that the dual criteria for findings of substantial releases and findings of substantial damages are to be used. Section 11.j. of the AEA has the following passage:

> The term extraordinary nuclear occurrence means any event causing a discharge or dispersal of source, special nuclear, or byproduct material from its intended place of confinement in amounts off-site, or causing radiation levels off-site, which the Nuclear Regulatory Commission or the Secretary of Energy, as appropriate, determines to be substantial, *and* which the Nuclear Regulatory Commission or the Secretary of Energy, as appropriate, determines has resulted or will probably result in substantial damages to persons off-site or property off-site. [emphasis added].

The Commission interprets this provision to mean that the determination that an ENO has occurred requires findings of substantial releases and of substantial damages.

Conclusions on Problems Cited in 1985 Federal Register Notice

With respect to the difficulties with the ENO determination criteria cited in the 1985 **Federal Register** notice (discussed earlier), the Commission now believes that these are not as serious as were once thought:

(1) Experience gained as a result of the TMI–2 accident suggests that the Criterion II threshold, requiring objective clinical evidence of radiation injury (10 CFR 140.85(a)(1)) to five or more individuals offsite, may not be as important to an ENO determination as the other findings in Criterion II. A second threshold in this criterion, a finding that $5 million or more in damage offsite has been or probably will be sustained (10 CFR 140.85(a)(2)), would appear to trigger an ENO determination before the radiation injury finding would. After the TMI–2 accident, no deaths or injury due to the accident were reported. However, to date, more than $70 million has been paid out in damages and expenses (mostly attributable to evacuation costs). If an accident occurred, the monetary damage estimate would apparently trigger the ENO determination before the death or injury threshold did. Thus the likelihood that the Commission would ever need to rely solely on 10 CFR 140.85(a)(1) to make a ''substantial damages'' to persons or property offsite finding is very small.

(2) The difficulty in estimating monetary damages does not seem to be as great as previously believed. The Commission now believes that timely and accurate estimates of monetary damages is possible. There exists a body of literature in which models for estimating such parameters and performing relevant studies are described. One study conducted by Mountain West Research, Inc., investigated the social and economic effects of the TMI–2 accident on the surrounding community.[6] The Commission is confident that, should an event meriting an ENO determination occur again, experts from the relevant disciplines can be assembled to estimate

[2] For example, the Law Offices of Bishop, Lieberman, Cook, Purcell & Reynolds made comments on behalf of Boston Edison Co., Carolina Power & Light Co., Commonwealth Edison Co, Florida Power Corp., Middle South Services Inc., Ohio Edison Company, Pennsylvania Power & Light Co., Southern California Edison Co., and Virginia Electric & Power Co.

[3] Peter F. Riehm, KMC, Inc., September 6, 1985, p. 2.

[4] Joseph F. Tiernan, Baltimore Gas and Electric, July 22, 1985, p. 2.

[5] Bishop *et al.*, August 7, 1985, p. 2.

[6] C.B. Flynn, J.A. Chalmers, ''The Social and Economic Effects of the Accident at Three Mile Island,'' NUREG–CR–1215, January 1980.

monetary damages. Furthermore, the legislative history of the modifications to the ''waiver of defenses'' provisions of the Price-Anderson Act (where the ENO concept was introduced) indicates that Congress was mindful that criteria to implement such an approach would be difficult to apply. In its September 14, 1966, report accompanying House of Representatives Bill No. 17685,[7] the former JCAE stated: ''[T]he committee recognizes that inclusion of the 'extraordinary nuclear occurrence concept' in this bill adds very considerably to the complexity of implementing the proposed legislation.'' [8] Thus, the difficulty of applying the criteria does not justify changing them.

(3) The fact that existing ENO determination criteria are not numerically consistent with PAGs, which was cited in the **Federal Register** notice for the 1985 proposed rule, was not seen so much as a difficulty with applying ENO criteria to TMI–2, but, rather was seen as a perceived inadequacy of the ENO criteria. But the PAGs were established with different objectives than the ENO criteria. The purpose of the PAGs is to reduce the radiation exposure of the public by setting predetermined action levels for implementing planned protective actions, such as evacuations. These action levels are established with public health and safety as the main objective. ''The concept of PAGs was introduced to radiological emergency response planning to assist public health and other governmental authorities in deciding how much of a radiation hazard in the environment constitutes a basis for initiating emergency protective actions.'' [9] In contrast, as stated in 10 CFR 140.81(b), the ENO regulations set forth the criteria which the Commission will follow to determine whether there has been an ENO. The Commission has taken the position that health and safety regulations have been conservatively determined and for a different purpose and are not appropriate for use as ENO thresholds. Section 140.81(b)(1) sets forth the scope of the ENO criteria as follows:

> The various limits in present NRC regulations are not appropriate for direct application in the determination of an ''extraordinary nuclear occurrence'' for they were arrived at with other purposes in mind, and those limits have been set at a level which is conservatively arrived at by incorporating a significant safety factor. Thus, a discharge or dispersal which exceeds the limits in NRC regulations, or in license conditions, although possible cause for concern, is not one which would be expected to cause substantial injury or damage unless it exceeds by some significant multiple the appropriate regulatory limit. Accordingly, in arriving at the values in the criteria to be deemed ''substantial'' it is more appropriate to adopt values separate from NRC health and safety regulations, and of course, the selection of these values will not in any way affect such regulations.

Thus, for the reasons stated, the Commission believes that lowering the thresholds for ENO determinations is not appropriate.

Summary of Commission Findings

The Commission has considered the comments in favor of modifying the criteria for determining that an ENO has occurred along the lines of the options presented in the proposed rule and those comments in favor of retaining the existing criteria. The Commission finds the latter more persuasive. Specifically, the Commission finds that:

(1) Although the existing criteria for determining that an ENO has occurred may be difficult to apply, they are consistent with the intent of Congress and need not be modified. The Commission believes that, contrary to the **Federal Register** notice for the proposed rule, the derivation of timely and accurate estimates of monetary damages is possible. The Commission is confident that, should an event meriting an ENO determination occur again, individuals and consulting firms with experience in estimating evacuation costs, changes in property values, loss of time from work, and other parameters can be assembled to make estimates of monetary damages. Moreover, as previously noted, the legislative history of the amendments to the ''waiver of defenses'' provisions of the Price-Anderson Act (where the ENO concept was introduced) indicates that Congress was mindful that criteria to implement such an approach would be difficult to apply. The difficulty of applying the criteria does not justify changing them.

(2) None of the options offered by the Commission in the 1985 proposed rule satisfies the legislative intent of Congress in defining an ENO. Under Option 1, a ''substantial release'' is an exposure to one or more persons offsite. Option 2 specifies a ''substantial release'' as an exposure to one or more persons located on or near any site boundary during the accident. However, both options would lower the ''substantial release thresholds'' from a whole body dose of 20 rem to 5 rem and similarly lower individual organ thresholds. At that level, individuals would not normally experience symptoms of radiation sickness. Thus, if Option 1 or Option 2 were adopted, a ''substantial release'' determination could be made for releases unlikely to produce detectable radiation injuries offsite. The rationale for lowering of the dose limits from 20 rem to 5 rem (i.e., numerical consistency with EPA's PAGs) failed to consider the fact that the PAGs are for initiating emergency response actions. The PAGs have no bearing on the dose levels at which the ''waiver of defenses'' provisions should be invoked. Therefore, the Commission finds that lowering ''substantial releases'' thresholds for ENO determinations is not warranted.

(3) As noted previously, Option 3 differs from the existing criteria and the other two options. Option 3 relies upon the probability that substantial injury or damages will be the consequence of some threshold dose exposure rate or contamination level and eliminates the need to estimate actual or probable damages and injuries. For example, one of the thresholds in Option 3 is that if the integrated air dose to an individual over any 24-hour period exceeds 10 rads, the Commission would find that ''substantial releases'' and ''substantial injuries'' have probably resulted and declare the event an ENO, even if no injuries or damages are sustained or projected. In effect, this option uses a single criterion for ''substantial release'' and ''substantial damage'' and thus is inconsistent with the two-part test for ENO determinations defined in Section 11.j. of the AEA. Therefore, the Commission finds that Option 3 of the proposed rule is also not appropriate.

Commission Action

Several factors contributed to the delay in completing the resolution of this petition until this time. The Commission dealt with the central request of the petitioners (i.e., to declare the TMI–2 accident an ENO) in a timely fashion. The petition was received on July 25, 1979, and the NRC published its finding that the accident was not an ENO in the **Federal Register** on April 23, 1980. In announcing its finding, the Commission did not specifically deny the petitioners' request to declare the TMI–2 accident an ENO.

The other request of the petitioners, to modify the ENO determination criteria, was considered to be of secondary importance. The Commission decided to consider this proposal but accorded it a low priority because of resource considerations and the existence of

[7] The Senate version of the bill, S–3830, was identical.

[8] House Report No. 2043, supra, n.1, p. 11.

[9] ''Planning Basis for the Development of State and Local Government Radiological Emergency Response Plans in Support of Light Water Nuclear Power Plants,'' NUREG–0396 (EPA 520/1–78–016), December 1978, p. 3.

higher priority rulemaking actions. In the meantime, in light of the public comments received, the Commission has reexamined its reasoning for the need for modification of the ENO criteria and the options that it proposed in the **Federal Register** notice for the proposed rule (50 FR 13978). The Commission also considered the legislative history of the Price-Anderson Act in arriving at its finding in this matter.

Because the current criteria for determining that an ENO has occurred are consistent with the intent of Congress and none of the options proposed in the 1985 rulemaking are deemed acceptable, the Commission now finds that revision of these criteria is not warranted. For these reasons, the second request in the petition for rulemaking (PRM–140–1) from the Public Citizen Litigation Group and the Critical Mass Energy Project is denied and the April 9, 1985, proposed rule is withdrawn.

Dated at Rockville, Maryland, this 11th day of October 2000.

For the Nuclear Regulatory Commission.

Annette L. Vietti-Cook,

Secretary of the Commission.

[FR Doc. 00–26642 Filed 10–16–00; 8:45 am]

BILLING CODE 7590–01–U

DEPARTMENT OF TRANSPORTATION

Federal Aviation Administration

14 CFR Part 39

[Docket No. 97–NM–201–AD]

RIN 2120–AA64

Airworthiness Directives; Dornier Model 328–100 Series Airplanes

AGENCY: Federal Aviation Administration, DOT.

ACTION: Notice of proposed rulemaking (NPRM).

SUMMARY: This document proposes the adoption of a new airworthiness directive (AD) that is applicable to all Dornier Model 328–100 series airplanes. This proposal would require revising the Airworthiness Limitations Section of the Instructions for Continued Airworthiness to incorporate life limits for certain items and inspections to detect fatigue cracking in certain structures. This proposal is prompted by issuance of new revisions to the Dornier 328 Airworthiness Limitations Document. The actions specified by the proposed AD are intended to ensure that fatigue cracking of certain structural elements is detected and corrected; such fatigue cracking could adversely affect the structural integrity of these airplanes.

DATES: Comments must be received by November 16, 2000.

ADDRESSES: Submit comments in triplicate to the Federal Aviation Administration (FAA), Transport Airplane Directorate, ANM–114, Attention: Rules Docket No. 97–NM–201–AD, 1601 Lind Avenue, SW., Renton, Washington 98055–4056. Comments may be inspected at this location between 9:00 a.m. and 3:00 p.m., Monday through Friday, except Federal holidays. Comments may be submitted via fax to (425) 227–1232. Comments may also be sent via the Internet using the following address: 9-anm-nprmcomment@faa.gov. Comments sent via fax or the Internet must contain ''Docket No. 97–NM–201–AD'' in the subject line and need not be submitted in triplicate. Comments sent via the Internet as attached electronic files must be formatted in Microsoft Word 97 for Windows or ASCII text.

The service information referenced in the proposed rule may be obtained from Fairchild Dornier, Dornier Luftfahrt GmbH, P.O. Box 1103, D–82230 Wessling, Germany. This information may be examined at the FAA, Transport Airplane Directorate, 1601 Lind Avenue, SW., Renton, Washington.

FOR FURTHER INFORMATION CONTACT: Norman B. Martenson, Manager, International Branch, ANM–116, FAA, Transport Airplane Directorate, 1601 Lind Avenue, SW., Renton, Washington 98055–4056; telephone (425) 227–2110; fax (425) 227–1149.

SUPPLEMENTARY INFORMATION:

Comments Invited

Interested persons are invited to participate in the making of the proposed rule by submitting such written data, views, or arguments as they may desire. Communications shall identify the Rules Docket number and be submitted in triplicate to the address specified above. All communications received on or before the closing date for comments, specified above, will be considered before taking action on the proposed rule. The proposals contained in this notice may be changed in light of the comments received.

Submit comments using the following format:

- Organize comments issue-by-issue. For example, discuss a request to change the compliance time and a request to change the service bulletin reference as two separate issues.
- For each issue, state what specific change to the proposed AD is being requested.
- Include justification (e.g., reasons or data) for each request.

Comments are specifically invited on the overall regulatory, economic, environmental, and energy aspects of the proposed rule. All comments submitted will be available, both before and after the closing date for comments, in the Rules Docket for examination by interested persons. A report summarizing each FAA-public contact concerned with the substance of this proposal will be filed in the Rules Docket.

Commenters wishing the FAA to acknowledge receipt of their comments submitted in response to this notice must submit a self-addressed, stamped postcard on which the following statement is made: ''Comments to Docket Number 97–NM–201–AD.'' The postcard will be date stamped and returned to the commenter.

Availability of NPRMs

Any person may obtain a copy of this NPRM by submitting a request to the FAA, Transport Airplane Directorate, ANM–114, Attention: Rules Docket No. 97–NM–201–AD, 1601 Lind Avenue, SW., Renton, Washington 98055–4056.

Discussion

The Luftfahrt-Bundesamt (LBA), which is the airworthiness authority for Germany, has notified the FAA that a new Revision 13 of the Dornier 328 Airworthiness Limitations Document (ALD), and new Temporary Revisions (TR's) to the ALD have been issued. [The FAA refers to the information included in Revision 13 of the ALD and in the new TR documents as the Airworthiness Limitations Section (ALS).] These new revisions to the ALD and TR documents affect all Dornier Model 328–100 series airplanes. These new revisions provide mandatory replacement times and structural inspection intervals approved under section 25.571 of the Joint Aviation Requirements and the Federal Aviation Regulations (14 CFR 25.571). As airplanes gain service experience, or as results of post-certification testing and evaluation are obtained, it may become necessary to add additional life limits or structural inspections in order to ensure the continued structural integrity of the airplane.

The LBA advises that compliance with the tasks, intervals, and life limits specified in Revision 13 of the ALD and in the TR documents is required to ensure continuing compliance with the airworthiness standards of the type

approval/type certification for Dornier Model 328 series airplanes. In addition, the LBA advises that certain life limits must be imposed for various components on these airplanes to preclude the onset of fatigue cracking in those components. Such fatigue cracking, if not corrected, could adversely affect the structural integrity of these airplanes.

Explanation of Relevant Service Information

Dornier has issued Dornier 328 Airworthiness Limitations Document, TM–ALD–010693–ALL, Revision 13, dated July 25, 1997, and a number of TR documents to amend certain sections of the ALD. Paragraph (a) of this AD includes a table that lists the TR documents and dates of issue. These documents include the following:

1. Life limit times for certain structural components, or other components or equipment.
2. Structural inspection times to detect fatigue cracking of certain Structural Significant Items (SSI).

Revision 13 of the ALD, and the TR documents, describe new inspections and compliance times for inspection and replacement actions. Accomplishment of the actions specified in those documents will preclude the onset of fatigue cracking of certain structural elements of the airplane.

The LBA has approved the previously referenced ALD and TR documents to assure the continued airworthiness of these airplanes in Germany. The LBA has not issued a corresponding airworthiness directive, although accomplishment of the additional life limits and structural inspections contained in the document described previously may be considered mandatory for operators of these airplanes in Germany.

FAA's Conclusions

The FAA has reviewed the previously referenced ALD and TR documents, and all available information, and has determined that AD action is necessary for products of this type design that are certificated for operation in the United States. Pursuant to this bilateral airworthiness agreement, the LBA has kept the FAA informed of the situation described above. These airplane models are manufactured in Germany and are type certificated for operation in the United States under the provisions of section 21.29 of the Federal Aviation Regulations (14 CFR 21.29) and the applicable bilateral airworthiness agreement. The FAA has determined that the previously referenced ALD and corresponding TR's must be incorporated into the ALS of the Instructions for Continued Airworthiness.

Explanation of Requirements of Proposed Rule

Since an unsafe condition has been identified that is likely to exist or develop on other airplanes of the same type design registered in the United States, the proposed AD would require revising the ALS of the Instructions for Continued Airworthiness to incorporate life limits for certain items and inspections to detect fatigue cracking in certain structures that are specified in the previously referenced ALD and TR documents.

Explanation of Action Taken by the FAA

In accordance with airworthiness standards requiring ''damage tolerance assessments'' for transport category airplanes [section 25.1529 of the Federal Aviation Regulations (14 CFR 25.1529), and the Appendices referenced in that section], all products certificated to comply with that section must have Instructions for Continued Airworthiness (or, for some products, maintenance manuals) that include an ALS. That section must set forth:

- Mandatory replacement times for structural components,
- Structural inspection intervals, and
- Related approved structural inspection procedures necessary to show compliance with the damage-tolerance requirements.

Compliance with the terms specified in the ALS is required by sections 43.16 (for persons maintaining products) and 91.403 (for operators) of the Federal Aviation Regulations (14 CFR 43.16 and 91.403).

In order to require compliance with these inspection intervals and life limits, the FAA must engage in rulemaking, namely the issuance of an AD. For products certificated to comply with the referenced part 25 requirements, it is within the authority of the FAA to issue an AD requiring a revision to the ALS that includes reduced life limits, or new or different structural inspection requirements. These revisions then are mandatory for operators under section 91.403(c) of the Federal Aviation Regulations (14 CFR 91.403), which prohibits operation of an airplane for which airworthiness limitations have been issued unless the inspection intervals specified in those limitations have been complied with.

After that document is revised, as required, and the AD has been fully complied with, the life limit or structural inspection change remains enforceable as a part of the airworthiness limitations. (This is analogous to AD's that require changes to the Limitations Section of the Airplane Flight Manual.)

Requiring a revision of the airworthiness limitations, rather than requiring individual inspections, is advantageous for operators because it allows them to record AD compliance status only once—at the time they make the revision—rather than after every inspection. It also has the advantage of keeping all airworthiness limitations, whether imposed by original certification or by AD, in one place within the operator's maintenance program, thereby reducing the risk of non-compliance because of oversight or confusion.

Cost Impact

The FAA estimates that 50 Dornier Model 328–100 series airplanes of U.S. registry would be affected by this proposed AD, that it would take approximately 1 work hour per airplane to accomplish the proposed actions, and that the average labor rate is $60 per work hour. Based on these figures, the cost impact of the proposed AD on U.S. operators is estimated to be $3,000, or $60 per airplane.

The cost impact figure discussed above is based on assumptions that no operator has yet accomplished any of the proposed requirements of this AD action, and that no operator would accomplish those actions in the future if this AD were not adopted.

Regulatory Impact

The regulations proposed herein would not have a substantial direct effect on the States, on the relationship between the National Government and the States, or on the distribution of power and responsibilities among the various levels of government. Therefore, it is determined that this proposal would not have federalism implications under Executive Order 13132.

For the reasons discussed above, I certify that this proposed regulation (1) is not a ''significant regulatory action'' under Executive Order 12866; (2) is not a ''significant rule'' under the DOT Regulatory Policies and Procedures (44 FR 11034, February 26, 1979); and (3) if promulgated, will not have a significant economic impact, positive or negative, on a substantial number of small entities under the criteria of the Regulatory Flexibility Act. A copy of the draft regulatory evaluation prepared for this action is contained in the Rules Docket. A copy of it may be obtained by contacting the Rules Docket at the

location provided under the caption **ADDRESSES.**

List of Subjects in 14 CFR Part 39

Air transportation, Aircraft, Aviation safety, Safety.

The Proposed Amendment

Accordingly, pursuant to the authority delegated to me by the Administrator, the Federal Aviation Administration proposes to amend part 39 of the Federal Aviation Regulations (14 CFR part 39) as follows:

PART 39—AIRWORTHINESS DIRECTIVES

1. The authority citation for part 39 continues to read as follows:

Authority: 49 U.S.C. 106(g), 40113, 44701.

§ 39.13 [Amended]

2. Section 39.13 is amended by adding the following new airworthiness directive:

Dornier Luftfahrt GMBH: Docket 97-NM–201-AD.

Applicability: All Model 328–100 series airplanes, certificated in any category.

Note 1: This AD applies to each airplane identified in the preceding applicability provision, regardless of whether it has been modified, altered, or repaired in the area subject to the requirements of this AD. For airplanes that have been modified, altered, or repaired so that the performance of the requirements of this AD is affected, the owner/operator must request approval for an alternative method of compliance in accordance with paragraph (c) of this AD. The request should include an assessment of the effect of the modification, alteration, or repair on the unsafe condition addressed by this AD; and, if the unsafe condition has not been eliminated, the request should include specific proposed actions to address it.

Compliance: Required as indicated, unless accomplished previously.

To ensure continued structural integrity of these airplanes, accomplish the following:

Airworthiness Limitations Revision

(a) Within 30 days after the effective date of this AD, revise the Airworthiness Limitations Section (ALS) of the Instructions for Continued Airworthiness by incorporating Revision 13 of the Dornier 328 Airworthiness Limitations Document (ALD), TM-ALD–010693–ALL, dated July 25, 1997, and the Temporary Revision (TR) documents listed in the following table into the Airworthiness Limitations Section (ALS):

TR Number	Date of issue
TR ALD–042	January 31, 1997.
TR ALD–048	May 12, 1998.
TR ALD–050	October 2, 1997.
TR ALD–052	December 11, 1997.
TR ALD–053	April 29, 1998.
TR ALD–054	May 12, 1998.
TR ALD–055	May 26, 1998.
TR ALD–056	July 22, 1998.
TR ALD–057	October 23, 1998.
TR ALD–059	December 11, 1998.
TR ALD–062	May 18, 1999.
TR ALD–063	August 10, 1999.
TR ALD–064	October 10, 1999.
TR ALD–065	November 26, 1999.
TR ALD–067	February 7, 2000.
TR ALD–068	February 4, 2000.
TR ALD–070	May 25, 2000.

Note 2: When the TR documents have been incorporated into the latest issue of the general revisions of the ALD, the general revisions may be incorporated into the ALS, provided that the information contained in the general revisions is identical to that specified in the TR documents.

(b) Except as provided in paragraph (c) of this AD: After the actions specified in paragraph (a) of this AD have been accomplished, no alternative inspections or inspection intervals may be approved for the structural elements specified in the documents listed in paragraph (a) of this AD.

Alternative Methods of Compliance

(c) An alternative method of compliance or adjustment of the compliance time that provides an acceptable level of safety may be used if approved by the Manager, International Branch, ANM–116, FAA, Transport Airplane Directorate. Operators shall submit their requests through an appropriate FAA Principal Maintenance Inspector, who may add comments and then send it to the Manager, International Branch, ANM–116.

Note 3: Information concerning the existence of approved alternative methods of compliance with this AD, if any, may be obtained from the International Branch, ANM–116.

Special Flight Permits

(d) Special flight permits may be issued in accordance with sections 21.197 and 21.199 of the Federal Aviation Regulations (14 CFR 21.197 and 21.199) to operate the airplane to a location where the requirements of this AD can be accomplished.

Issued in Renton, Washington, on October 11, 2000.

Donald L. Riggin,

Acting Manager, Transport Airplane Directorate, Aircraft Certification Service.

[FR Doc. 00–26594 Filed 10–16–00; 8:45 am]

BILLING CODE 4910–13–P

DEPARTMENT OF TRANSPORTATION

Federal Aviation Administration

14 CFR Part 39

[Docket No. 2000–NM–295–AD]

RIN 2120–AA64

Airworthiness Directives; Boeing Model 737–200 and –300 Series Airplanes Equipped with a Main Deck Cargo Door Installed in Accordance with Supplemental Type Certificate (STC) SA2969SO

AGENCY: Federal Aviation Administration, DOT.

ACTION: Notice of proposed rulemaking (NPRM).

SUMMARY: This document proposes the supersedure of an existing airworthiness directive (AD), applicable to certain Boeing Model 737–200 and –300 series airplanes, that currently requires a one-time inspection to detect cracks of the lower frames and reinforcing angles of the main deck cargo door where the door latch fittings attach between certain fuselage stations and water lines, and replacement of any cracked part with a new part having the same part number. That AD was prompted by reports that, during the inspections required by the existing AD, cracks were found in the reinforcing angles of the main deck cargo door frame. This action would require, among other actions, an inspection to detect cracks of the lower frames and reinforcing angles of the main deck cargo door; replacement of any lower frame or reinforcing angle of the main deck cargo door when it has reached its maximum life limit. The actions specified by the proposed AD are intended to detect and correct cracking of the lower portion of the main deck cargo door frames, which could result in sudden depressurization, loss or opening of the main deck cargo door during flight, and loss of control of the airplane.

DATES: Comments must be received by November 16, 2000.

ADDRESSES: Submit comments in triplicate to the Federal Aviation Administration (FAA), Transport Airplane Directorate, ANM–114, Attention: Rules Docket No. 2000–NM–295–AD, 1601 Lind Avenue, SW., Renton, Washington 98055–4056. Comments may be inspected at this location between 9 a.m. and 3 p.m., Monday through Friday, except Federal holidays. Comments may be submitted via fax to (425) 227–1232. Comments may also be sent via the Internet using the following address: 9-anm-

nprmcomment@faa.gov. Comments sent via fax or the Internet must contain ''Docket No. 2000–NM–295–AD'' in the subject line and need not be submitted in triplicate. Comments sent via the Internet as attached electronic files must be formatted in Microsoft Word 97 for Windows or ASCII text.

The service information referenced in the proposed rule may be obtained from Pemco World Air Services, 100 Pemco Drive, Dothan, AL 36303. This information may be examined at the FAA, Transport Airplane Directorate, 1601 Lind Avenue, SW., Renton, Washington.

FOR FURTHER INFORMATION CONTACT:

Rany Azzi, Aerospace Engineer, Airframe and Propulsion Branch, ACE–117A, FAA, Atlanta Aircraft Certification Office, One Crown Center, 1895 Phoenix Boulevard, Suite 450, Atlanta, Georgia 30337–2748, telephone (770) 703–6083; fax (770) 703–6097.

SUPPLEMENTARY INFORMATION:

Comments Invited

Interested persons are invited to participate in the making of the proposed rule by submitting such written data, views, or arguments as they may desire. Communications shall identify the Rules Docket number and be submitted in triplicate to the address specified above. All communications received on or before the closing date for comments, specified above, will be considered before taking action on the proposed rule. The proposals contained in this notice may be changed in light of the comments received.

Submit comments using the following format:

- Organize comments issue-by-issue. For example, discuss a request to change the compliance time and a request to change the service bulletin reference as two separate issues.
- For each issue, state what specific change to the proposed AD is being requested.
- Include justification (e.g., reasons or data) for each request.

Comments are specifically invited on the overall regulatory, economic, environmental, and energy aspects of the proposed rule. All comments submitted will be available, both before and after the closing date for comments, in the Rules Docket for examination by interested persons. A report summarizing each FAA-public contact concerned with the substance of this proposal will be filed in the Rules Docket.

Commenters wishing the FAA to acknowledge receipt of their comments submitted in response to this notice must submit a self-addressed, stamped postcard on which the following statement is made: ''Comments to Docket Number 2000–NM–295–AD.'' The postcard will be date stamped and returned to the commenter.

Availability of NPRMs

Any person may obtain a copy of this NPRM by submitting a request to the FAA, Transport Airplane Directorate, ANM–114, Attention: Rules Docket No. 2000–NM–295–AD, 1601 Lind Avenue, SW., Renton, Washington 98055–4056.

Discussion

On August 18, 2000, the FAA issued AD 2000–17–51, amendment 39–11877 (65 FR 51752, August 25, 2000), applicable to certain Boeing Model 737–200 and –300 series airplanes, to require a one-time inspection to detect cracks of the lower frames and reinforcing angles of the main deck cargo door where the door latch fittings attach between certain fuselage stations (FS) and water lines (WL), and replacement of any cracked part with a new part having the same part number. That action was prompted by reports that, during the inspections required by the existing AD, cracks were found in the reinforcing angles of the main deck cargo door frame. The requirements of that AD are intended to detect and correct cracking of the lower portion of the main deck cargo door frames, which could result in sudden depressurization, loss or opening of the main deck cargo door during flight, and loss of control of the airplane.

In the preamble of AD 2000–17–51, the FAA indicated that the actions required by that AD were considered ''interim action'' and that further rulemaking action was being considered to supersede that AD to require replacement of the main deck cargo door frames and reinforcing angles that have accumulated 7,000 or more total flight cycles with new parts. The FAA now has determined that further rulemaking action is indeed necessary, and this proposed AD follows from that determination.

Actions Since Issuance of Previous Rule

Since the issuance of that AD, the FAA has reviewed and approved Pemco Service Bulletin 737–52–0037, Revision 2, dated September 13, 2000, including Attachment 1, dated August 10, 2000. The service bulletin describes the following procedures:

- A high frequency eddy current (HFEC) inspection to detect cracks of the lower frames and reinforcing angles of the main deck cargo door where the door latch fittings attach between FS 361.87 and FS 498.12 and WL 202.35 and WL 213.00;
- Repetitive HFEC inspections of existing and replaced parts; and
- Replacement of any lower frame or reinforcing angle of the main deck cargo door, if cracks are detected or when the frame or angle has reached its maximum life limit (i.e. 7,000 flight cycles), with a new part having the same part number.

Accomplishment of the actions specified in the service bulletin is intended to adequately address the identified unsafe condition.

Explanation of Requirements of Proposed Rule

Since an unsafe condition has been identified that is likely to exist or develop on other products of this same type design, the proposed AD would supersede AD 2000–17–51 to require accomplishment of the actions specified in the service bulletin described previously.

Cost Impact

There are approximately 35 Model 737–200 and -300 series airplanes of the affected design in the worldwide fleet. The FAA estimates that 2 airplanes of U.S. registry would be affected by this proposed AD.

It would take approximately 500 work hours per airplane to accomplish the proposed inspection, at an average labor rate of $60 per work hour. Based on these figures, the cost impact of the inspection proposed by this AD on U.S. operators is estimated to be $60,000, or $30,000 per airplane.

It would take approximately 128 work hours per airplane to accomplish the proposed replacement, at an average labor rate of $60 per work hour. Required parts would cost approximately $15,521 per airplane. Based on these figures, the cost impact of the proposed AD on U.S. operators is estimated to be $46,402, or $23,201 per airplane.

The cost impact figures discussed above are based on assumptions that no operator has yet accomplished any of the current or proposed requirements of this AD action, and that no operator would accomplish those actions in the future if this AD were not adopted. The cost impact figures discussed in AD rulemaking actions represent only the time necessary to perform the specific actions actually required by the AD. These figures typically do not include incidental costs, such as the time required to gain access and close up, planning time, or time necessitated by other administrative actions.

Regulatory Impact

The regulations proposed herein would not have a substantial direct effect on the States, on the relationship between the national Government and the States, or on the distribution of power and responsibilities among the various levels of government. Therefore, it is determined that this proposal would not have federalism implications under Executive Order 13132.

For the reasons discussed above, I certify that this proposed regulation (1) is not a ''significant regulatory action'' under Executive Order 12866; (2) is not a ''significant rule'' under the DOT Regulatory Policies and Procedures (44 FR 11034, February 26, 1979); and (3) if promulgated, will not have a significant economic impact, positive or negative, on a substantial number of small entities under the criteria of the Regulatory Flexibility Act. A copy of the draft regulatory evaluation prepared for this action is contained in the Rules Docket. A copy of it may be obtained by contacting the Rules Docket at the location provided under the caption **ADDRESSES.**

List of Subjects in 14 CFR Part 39

Air transportation, Aircraft, Aviation safety, Safety.

The Proposed Amendment

Accordingly, pursuant to the authority delegated to me by the Administrator, the Federal Aviation Administration proposes to amend part 39 of the Federal Aviation Regulations (14 CFR part 39) as follows:

PART 39—AIRWORTHINESS DIRECTIVES

1. The authority citation for part 39 continues to read as follows:

Authority: 49 U.S.C. 106(g), 40113, 44701.

§ 39.13 [Amended]

2. Section 39.13 is amended by removing amendment 39–11877 (65 FR 51752, August 25, 2000), and by adding a new airworthiness directive (AD), to read as follows:

Boeing: Docket 2000–NM–295–AD. Supersedes AD 2000–17–51, Amendment 39–11877.

Applicability: Model 737–200 and −300 series airplanes, equipped with a main deck cargo door installed in accordance with Supplemental Type Certificate (STC) SA2969SO; certificated in any category.

Note 1: This AD applies to each airplane identified in the preceding applicability provision, regardless of whether it has been modified, altered, or repaired in the area subject to the requirements of this AD. For airplanes that have been modified, altered, or repaired so that the performance of the requirements of this AD is affected, the owner/operator must request approval for an alternative method of compliance in accordance with paragraph (c)(1) of this AD. The request should include an assessment of the effect of the modification, alteration, or repair on the unsafe condition addressed by this AD; and, if the unsafe condition has not been eliminated, the request should include specific proposed actions to address it.

Compliance: Required as indicated, unless accomplished previously.

To detect and correct cracking of the lower portion of the main deck cargo door frames, which could result in sudden depressurization, loss or opening of the main deck cargo door during flight, and loss of control of the airplane, accomplish the following:

Actions Addressing Door Frames or Reinforcing Angles That Have Been Replaced

(a) For airplanes on which any door frame or reinforcing angle at the location where the door latch fittings attach between fuselage station (FS) 361.86 and FS 298.12 and water line (WL) 202.35 and WL 213.00 has been replaced before the effective date of this AD: Do the actions specified in paragraphs (a)(1) and (a)(2) of this AD per the Accomplishment Instructions of Pemco Service Bulletin 737–52–0037, Revision 2, dated September 13, 2000, including Attachment 1, dated August 10, 2000.

(1) Within 3,000 flight cycles after accomplishment of the replacement, do a high frequency eddy current (HFEC) inspection to detect cracks of the replaced lower frames or replaced reinforcing angles of the main deck cargo door, as applicable.

(i) If no crack is detected, repeat the HFEC inspection thereafter at intervals of 1,300 flight cycles on the replaced part.

(ii) If any crack is detected, before further flight, replace the cracked part with a new part having the same part number per the service bulletin. Within 3,000 flight cycles after accomplishment of the replacement, do the HFEC inspection required by paragraph (a)(1) of this AD.

(2) Before or upon the accumulation of 7,000 total flight cycles on any lower frame or reinforcing angle of the main deck cargo door, replace the lower frame or reinforcing angle, as applicable, with new parts. Within 3,000 flight cycles after accomplishment of the replacement, do the HFEC inspection required by paragraph (a)(1) of this AD.

Actions Addressing Door Frames or Reinforcing Angles That Have Not Been Replaced

(b) For airplanes on which any door frame or reinforcing angle at the location where the door latch fittings attach between FS 361.86 and FS 298.12 and WL 202.35 and WL 213.00 has NOT been replaced before the effective date of this AD: Within 1,300 flight cycles after accomplishment of the HFEC inspection required by AD 2000–17–51, amendment 39–11877, do the action specified in either paragraph (b)(1) or (b)(2) of this AD, as applicable, per the Accomplishment Instructions of Pemco Service Bulletin 737–52–0037, Revision 2, dated September 13, 2000, including Attachment 1, dated August 10, 2000.

(1) For airplanes that have accumulated less than 7,000 total flight cycles since installation of STC SA2969SO: Do an HFEC inspection to detect cracks of the lower frames and reinforcing angles of the main deck cargo door where the door latch fittings attach between FS 361.87 and FS 498.12 and WL 202.35 and WL 213.00.

(i) If no crack is detected, do the actions specified in paragraphs (b)(1)(i)(A) and (b)(1)(i)(B) of this AD.

(A) Repeat the HFEC inspection thereafter at intervals of 1,300 flight cycles on the airplane, but not to exceed the accumulation of 7,000 total flight cycles on the airplane.

(B) Before the accumulation of 7,000 total flight cycles on the airplane, replace the lower frame and reinforcing angle with new parts per the service bulletin. Within 3,000 flight cycles after accomplishment of the replacement, do the HFEC inspection required by paragraph (a)(1) of this AD.

(ii) If any crack is detected, before further flight, replace the cracked part with a new part having the same part number per the service bulletin. Within 3,000 flight cycles after accomplishment of the replacement, do the HFEC inspection required by paragraph (a)(1) of this AD.

(2) For airplanes that have accumulated 7,000 or more total flight cycles since installation of STC SA2969SO: Replace the lower frames and reinforcing angles with new parts. Within 3,000 flight cycles after accomplishment of the replacement, do the HFEC inspection required by paragraph (a)(1) of this AD.

Alternative Methods of Compliance

(c)(1) An alternative method of compliance or adjustment of the compliance time that provides an acceptable level of safety may be used if approved by the Manager, Atlanta

Aircraft Certification Office (ACO), FAA. Operators shall submit their requests through an appropriate FAA Principal Maintenance Inspector, who may add comments and then send it to the Manager, Atlanta ACO.

Note 2: Information concerning the existence of approved alternative methods of compliance with this AD, if any, may be obtained from the Atlanta ACO.

(2) Alternative methods of compliance, approved previously in accordance with AD 2000–17–51, amendment 39–11877, are approved as alternative methods of compliance with the initial HFEC inspection required by paragraph (a)(1) of this AD.

Special Flight Permits

(d) Special flight permits may be issued in accordance with sections 21.197 and 21.199 of the Federal Aviation Regulations (14 CFR 21.197 and 21.199) to operate the airplane to a location where the requirements of this AD can be accomplished.

Issued in Renton, Washington, on October 11, 2000.

Donald L. Riggin,

Acting Manager, Transport Airplane Directorate, Aircraft Certification Service.

[FR Doc. 00–26595 Filed 10–16–00; 8:45 am]

BILLING CODE 4910–13–P

DEPARTMENT OF THE TREASURY

Internal Revenue Service

26 CFR Parts 1, 5f, and 31

[REG–246249–96]

RIN 1545–AW48

Information Reporting Requirements for Certain Payments Made on Behalf of Another Person, Payments to Joint Payees, and Payments of Gross Proceeds From Sales Involving Investment Advisers

AGENCY: Internal Revenue Service (IRS), Treasury.

ACTION: Withdrawal of previous notice of proposed rulemaking; notice of proposed rulemaking; and notice of public hearing.

SUMMARY: This document withdraws a previous notice of proposed rulemaking (LR–62–84) published May 29, 1984 (49 FR 22343). This document contains proposed regulations under section 6041 that clarify who is the payee for information reporting purposes if a check or other instrument is made payable to joint payees, provide information reporting requirements for escrow agents and other persons making payments on behalf of another person, and clarify that the amount to be reported paid is the gross amount of the payment. This document also contains proposed regulations under section 6045 that remove investment advisers from the list of exempt recipients. In addition, this document provides notice of a public hearing on these proposed regulations.

DATES: Written or electronic comments must be received by January 17, 2001. Requests to speak (with outlines of oral comments) at a public hearing scheduled for February 7, 2001, at 10 a.m. must be submitted by January 24, 2001.

ADDRESSES: Send submissions to: CC:M&SP:RU (REG–246249–96), room 5226, Internal Revenue Service, POB 7604, Ben Franklin Station, Washington, DC 20044. In the alternative, submissions may be hand delivered Monday through Friday between the hours of 8 a.m. and 5 p.m. to: CC:M&SP:RU (REG–246249–96), Courier's Desk, Internal Revenue Service, 1111 Constitution Avenue, NW., Washington, DC, or sent electronically via the IRS Internet site at http://www.irs.gov/tax__regs/regslist.html. The public hearing will be held in the IRS Auditorium, Seventh Floor, Internal Revenue Service Building, 1111 Constitution Avenue, NW., Washington, DC.

FOR FURTHER INFORMATION CONTACT: Concerning the regulations, Nancy L. Rose, (202) 622–4910; concerning submission of comments, the hearing, and/or to be placed on the building access list to attend the hearing, Guy R. Traynor, (202) 622–7190 (not toll-free numbers).

SUPPLEMENTARY INFORMATION:

Paperwork Reduction Act

The collection of information contained in this notice of proposed rulemaking has been submitted to the Office of Management and Budget for review in accordance with the Paperwork Reduction Act of 1995 (44 U.S.C. 3507(d)). Comments on the collection of information should be sent to the Office of Management and Budget, Attn: Desk Officer for the Department of Treasury, Office of Information and Regulatory Affairs, Washington, DC 20503, with copies to the Internal Revenue Service, Attn: IRS Reports Clearance Officer, W:CAR:MP:FP:S:O, Washington, DC 20224. Comments on the collection of information should be received by December 19, 2000. Comments are specifically requested concerning:

Whether the proposed collection of information is necessary for the proper operation of the functions of the Internal Revenue Service, including whether the information will have practical utility;

The accuracy of the estimated burden associated with the proposed collection of information (see below);

How the quality, utility, and clarity of the information to be collected may be enhanced;

How the burden of complying with the proposed collection of information may be minimized, including through the application of automated collection techniques or other forms of information technology; and

Estimates of capital or start-up costs and costs of operation, maintenance, and purchase of service to provide information.

The collection of information in these proposed regulations is in §§ 1.6041–1(e) and 1.6045–1(c)(3). This information is required to determine if taxpayers have properly reported amounts received as income. The collection of information is mandatory. The likely respondents are businesses and other for-profit institutions.

The estimate of the reporting burden in proposed § 1.6041–1 is reflected in the burden of Form 1099-MISC, Miscellaneous Income, which is currently 14 minutes per form. The estimate of the reporting burden in proposed § 1.6045–1 is reflected in the burden of Form 1099-B, Proceeds of Broker and Barter Exchange Transactions, which is currently 15 minutes per form.

An agency may not conduct or sponsor, and a person is not required to respond to, a collection of information unless it displays a valid control number assigned by the Office of Management and Budget.

Books or records relating to the collection of information must be retained as long as their contents may become material in the administration of any internal revenue law. Generally tax returns and tax return information are confidential, as required by 26 U.S.C. 6103.

Background and Explanation of Provisions

1. Proposed Regulations Under Section 6041

Section 6041 provides that all persons engaged in a trade or business that make certain payments in the course of that trade or business to another person of $600 or more in a taxable year must report the amount of the payments and the name and address of the recipient.

Section 3406(a) provides that a payor must withhold tax from reportable

payments under certain circumstances, for example, if the payee has failed to furnish a valid taxpayer identification number to the payor in the manner required. ''Reportable payments'' include payments that are required to be reported under sections 6041 and 6045. Section 3406(b)(3)(A) and (C). The party that is responsible for reporting the payments under sections 6041 and 6045 is also responsible for any backup withholding required under section 3406.

These proposed regulations address certain issues identified by the Commissioner's Information Reporting Program Advisory Committee (IRPAC) and take into account comments and information provided by IRPAC members representing the banking, real estate, insurance, and securities industries.

a. Payments to Joint Payees

The proposed regulations clarify the definition of fixed and determinable income in § 1.6041–1(c) when a payment is made payable to joint payees. This issue was discussed in papers presented at IRPAC meetings in May 1994 and May 1995. The regulations provide that a payment made jointly to two or more payees may be fixed and determinable income to one payee even though the payment is not fixed and determinable income to another payee. For example, when a payment in consideration for services is made payable to joint payees, one of whom is the service provider, an information return must be made showing the service provider as the payee if the payment is fixed and determinable income to the service provider, even if the payment is not fixed and determinable income to the other payee. See, *e.g.,* Situation 2 of Rev. Rul. 70–608 (1970–2 C.B. 286).

b. Identification of Payor

A payment reportable under section 6041 may be made by a person on behalf of another person that is the actual source of the funds. Under certain circumstances this so-called middleman, and not the person that provided the funds, is the payor obligated to report the payment under section 6041. See, *e.g.*, Rev. Rul. 93–70 (1993–2 C.B. 294).

Consistent with Rev. Rul. 93–70, the proposed regulations add a new paragraph (e)(1) to § 1.6041–1 that provides that a person that makes a payment on behalf of another person and performs a management or oversight function in connection with, or has a significant economic interest in, the payment must report under section 6041. A management or oversight function is an activity that is more than merely administrative or ministerial. For example, a person that merely writes checks at the direction of others in connection with a transaction, sometimes referred to as a paying agent, is performing only an administrative or ministerial function and is not a payor. In contrast, a person that exercises discretion or supervision in connection with a payment is performing a management or oversight function and is a payor. A significant economic interest in a payment is an economic interest that would be compromised if the payment were not made. For example a bank has a significant economic interest in a payment to a contractor when damage occurs to property securing a mortgage held by the bank. With this standard, which was also discussed in the IRPAC papers of May 1994 and May 1995, the proposed regulations attempt to replace disparate revenue rulings with a consistent and easily administrable rule that can be applied to a variety of factual situations involving middlemen.

Section 1.6041–1(e)(2) of the proposed regulations provides an exception to the general rule of § 1.6041–1(e)(1) by referencing the procedures in Rev. Proc. 84–33 (1984–1 C.B. 502) for an optional method for payors to designate a paying agent to file information returns and backup withhold.

The proposed regulations include examples, derived primarily from revenue rulings and private letter rulings, which are intended to be all-inclusive. Rulings that are factually encompassed by the proposed regulations will be obsoleted. Comments are requested identifying other factually relevant rulings or suggesting appropriate additional examples.

The proposed regulations make two changes to § 1.6041–3 (to be effective January 1, 2001). They revise § 1.6041–3(d) to conform the cross-reference to § 1.6041–1 to the language effective January 1, 2001, and to clarify the current rule that real estate agents who manage rental property and make payments of rent to landlords are payors and continue to be subject to the general requirements of § 1.6041–1. The proposed regulations also remove § 1.6041–3(n), which provides an exception to the information reporting requirements of section 6041 for amounts that a bank or similar institution collects on behalf of, and pays over or credits to the account of, the actual owner of the funds, but only if it does not collect the items on a regular and continuing basis. Rev. Rul. 77–53 (1977–1 C.B. 368) further restricted this limitation to banks that collect items on a regular and continuing basis and also assume a management function or perform more than the mere collection and payment or crediting of funds to a customer's account. This holding is consistent with the ''management and oversight'' standard of the proposed regulations. Accordingly, *Example 11* of the proposed regulations preserves the holding of Rev. Rul. 77–53. Section 1.6041–3(n) is removed to avoid confusion and redundancy. However, its removal will change current requirements by imposing a reporting requirement on a bank that collects and pays or credits funds on behalf of a customer on an infrequent or isolated basis if it performs a management or oversight function in connection with the payment, a transaction that is currently within the § 1.6041–3(n) exception.

The proposed regulations also remove paragraphs (b) and (c) of § 31.3406(a)–2. These paragraphs provide a standard for information reporting by a so-called middleman that is inconsistent with the standard in the proposed regulations. As amended, § 31.3406(a)–2 reiterates the general rule of section 3406(h) (also stated in § 35a.9999–3, Q & A 1) that the definition of payor for information reporting purposes determines who is the payor for backup withholding purposes as well.

c. Amount To Be Reported When Fees, Expenses or Commissions are Deducted From a Payment

The proposed regulations add a new paragraph (f) to § 1.6041–1 that clarifies that the amount to be reported as paid to a payee is the gross amount of the payment or payments before fees, commissions, expenses, or other amounts owed by the payee to another person have been deducted. See, *e.g.*, Rev. Rul. 67–197 (1967–1 C.B. 319); Rev. Rul. 54–571 (1954–2 C.B. 235). The rule, which applies whether the payment is made jointly or separately to the payee and another person, is also cross-referenced in *Example 6* and *Example 8* of § 1.6041–1(e)(3).

The rule of § 1.6041–1(f) is illustrated by two examples involving payment of taxable damages by a defendant to a plaintiff. These examples, read with *Example 8* of § 1.6041–1(e)(3), are, in part, inconsistent with *Example 2* of the proposed regulations at § 1.6045–5(f), published on May 21, 1999 (64 FR 27730). *Example 2* states that a defendant that pays a settlement to a plaintiff and knows the amount of the plaintiff's attorney fees included in the

payment is required to report the payment of the attorney fees under section 6041 and not the gross proceeds under section 6045(f). However, under § 1.6041–1(e) of these regulations, the defendant is not exercising management or oversight in connection with, and therefore is not required to make an information return under section 6041 for, the payment to the attorney. The plaintiff, not the defendant, is required to report the payment of attorney fees to plaintiff's attorney under section 6041 (assuming that the payment is made in the course of the plaintiff's trade or business and that the other requirements of section 6041 apply). Accordingly, *Example 2* in the final regulations under section 6045(f) will be revised to provide that the defendant is not required to make an information return under section 6041 but is required to make an information return under section 6045(f), even if the defendant knows the amount of plaintiff's attorney fees.

d. Revenue Rulings To Become Obsolete

As discussed above, the proposed regulations apply to the factual situations addressed in the following revenue rulings, which will become obsolete:

Rev. Rul. 93–70 (1993–2 C.B. 294)
Rev. Rul. 85–50 (1985–1 C.B. 345)
Rev. Rul. 77–53 (1977–1 C.B. 368)
Rev. Rul. 73–232 (1973–1 C.B. 541)
Rev. Rul. 70–608, Situations 1, 2, and 5 (1970–2 C.B. 286)
Rev. Rul. 69–595 (1969–2 C.B. 242)
Rev. Rul. 67–197 (1967–1 C.B. 319)
Rev. Rul. 65–129 (1965–1 C.B. 519)
Rev. Rul. 64–36 (1964–1 C.B. 446)
Rev. Rul. 59–328 (1959–2 C.B. 379)
Rev. Rul. 55–606 (1955–2 C.B. 489)
Rev. Rul. 54–571 (1954–2 C.B. 235)

2. Proposed Regulations Under Section 6045

Section 6045 provides that a broker must file an information return showing the name and address of the broker's customer and other details, such as the amount of the gross proceeds of the transaction, as the Secretary may require. Section 6045(c) defines a broker as a dealer, a barter exchange, or any other person who, for a consideration, regularly acts as a middleman with respect to property or services.

Section 1.6045–1(a)(2) provides that a customer is the person who makes a sale effected by a broker, if the broker acts as (i) an agent for the customer in the sale, (ii) a principal in the sale, or (iii) the party in the sale responsible for paying or crediting the proceeds to the customer. Under § 1.6045–1(h), a broker must treat the person whose name appears on the broker's books and records as the principal.

Section 5f.6045–1(c)(3), also published as proposed regulations (49 FR 22343), provides that no return of information is required with respect to a sale effected for a customer that is an exempt recipient. Among the categories of exempt recipients is a person registered under the Investment Advisers Act of 1940 who regularly acts as a broker (an investment adviser).

Section 5f.6045–1(c)(3)(iii) provides that, in a cash on delivery or similar transaction, only the broker that receives the gross proceeds against delivery of the securities sold is required to report a sale, unless the broker's customer is another broker (a second-party broker) that is an exempt recipient. In that case, only the second-party broker is required to report.

One effect of these provisions is to shift the reporting requirement in a cash on delivery transaction from the broker that receives the gross proceeds against delivery of the securities to an investment adviser. For example, in § 5f.6045–1(c)(4) *Example (4)*, an investment adviser instructs a broker/dealer to sell securities owned by the investment adviser's customer and to pay the proceeds of the sale to a custodian bank. The custodian bank is instructed to deliver the securities to the broker/dealer against delivery of the proceeds of the sale. The investment adviser, and not the broker/dealer or the custodian bank, is required to report the payment of the proceeds of the sale to the investment adviser's customer, because (1) the broker/dealer paid the gross proceeds of the sale to the custodian bank against delivery of the securities sold, and (2) the custodian bank's customer was the investment adviser, an exempt recipient.

Commentators on the proposed regulations objected to the imposition of the reporting obligation under section 6045(a) on investment advisers because (1) investment advisers generally do not have first-hand knowledge that a sale has been completed, and (2) investment advisers generally do not handle the proceeds of a sale and, consequently, cannot comply with the backup withholding requirements of section 3406. Investment adviser reporting issues were also the subject of IRPAC papers presented at meetings in November 1995 and October 1997.

These proposed regulations withdraw the 1984 proposed regulations. In general, they propose to incorporate the provisions of § 5f.6045–1 into § 1.6045–1(c)(3) and (4). The proposed regulations also remove investment advisers from the list of exempt recipients and revise current § 5f.6045–1(c)(4) *Examples 4* and *5* to clarify that, under the revised rules, an investment adviser that initiates a sale on behalf of a customer is required to make a return of information only if the sale relates to an investment account in the investment adviser's name (i.e., the identity of the customer is not disclosed to the account custodian).

Proposed Effective Date

The provisions of these regulations under sections 6041 and 3406 are proposed to be applicable for payments made on or after the beginning of the first calendar year that begins after these regulations are published in the **Federal Register** as final regulations. The provisions of these regulations under section 6045 are proposed to be applicable for sales effected on or after the beginning of the first calendar year that begins after the date these regulations are published in the **Federal Register** as final regulations.

Special Analyses

It has been determined that this notice of proposed rulemaking is not a significant regulatory action as defined in Executive Order 12866. Therefore, a regulatory assessment is not required. It has also been determined that section 553(b) of the Administrative Procedure Act (5 U.S.C. chapter 5) does not apply to these regulations. An initial regulatory flexibility analysis has been prepared for the collection of information in this notice of proposed rulemaking under 5 U.S.C. section 603. The analysis is set forth in this preamble under the heading ''Initial Regulatory Flexibility Analysis.'' Pursuant to section 7805(f) of the Internal Revenue Code, this notice of proposed rulemaking will be submitted to the Chief Counsel for Advocacy of the Small Business Administration for comment on its impact on small business.

Initial Regulatory Flexibility Analysis

The collection of information proposed in § 1.6041–1(e) is needed to clarify the requirements for filing an information return under section 6041 when a person makes a payment on behalf of another person or to joint payees. The objectives of the proposed regulations are to provide uniform, practicable, and administrable rules under section 6041 for persons making payments on behalf of another person or to joint payees. The types of small entities to which the proposed regulations may apply are small businesses. An estimate of the number of small entities affected is not feasible because of the large variety of entities

and transactions to which the proposed regulations may apply. However, in 1997 a total of 73,273,621 Forms 1099–MISC were filed with the IRS. The number of 1997 Forms 1099–MISC that related to transactions that involved payments made on behalf of another person or to joint payees cannot be determined. The current estimated reporting burden relating to Form 1099–MISC is 14 minutes per form. No special professional skills are necessary for preparation of the reports or records. There are no known Federal rules that duplicate, overlap, or conflict with these proposed regulations. The regulations proposed are considered to have the least economic impact on small entities of all alternatives considered.

The collection of information in proposed § 1.6045–1(c)(3) will not have a significant economic impact on a substantial number of small entities. The proposed regulations will relieve investment advisers of the requirement to make information returns under section 6045(a), and few, if any, financial custodians that may be affected by the regulations are small entities.

Comments and Public Hearing

Before these proposed regulations are adopted as final regulations, consideration will be given to any electronic or written comments (a signed original and eight (8) copies) that are submitted timely (in the manner described in the **ADDRESSES** caption) to the IRS. The IRS and Treasury Department request comments on the clarity of the proposed rules and how they may be made easier to understand. All comments will be available for public inspection and copying.

A public hearing has been scheduled for February 7, 2001, beginning at 10 a.m. in the IRS Auditorium, Seventh Floor, Internal Revenue Building, 1111 Constitution Avenue, NW., Washington, DC. Due to building security procedures, visitors must enter at the 10th Street entrance, located between Constitution and Pennsylvania Avenues, NW. In addition, all visitors must present photo identification to enter the building.

Because of access restrictions, visitors will not be admitted beyond the immediate entrance area more than 15 minutes before the hearing starts. For information about having your name placed on the building access list to attend the hearing, see the **FOR FURTHER INFORMATION CONTACT** section of the preamble.

The rules of 26 CFR 601.601(a)(3) apply to the hearing. Persons who wish to present oral comments at the hearing must submit written comments and an outline of the topics to be discussed and the time to be devoted to each topic (signed original and eight (8) copies) by January 24, 2001. A period of 10 minutes will be allotted to each person for making comments. An agenda showing the scheduling of the speakers will be prepared after the deadline for receiving outlines has passed. Copies of the agenda will be available free of charge at the hearing.

Drafting Information

The principal author of these regulations is Donna M. Crisalli, Office of the Associate Chief Counsel (Income Tax & Accounting). However, other personnel from the IRS and Treasury Department participated in their development.

List of Subjects

26 CFR Parts 1 and 5f

Income taxes, Reporting and recordkeeping requirements.

26 CFR Part 31

Employment taxes, Income taxes, Penalties, Railroad retirement, Reporting and recordkeeping requirements, Social security, Unemployment compensation.

Proposed Amendments to the Regulations

Accordingly, under the authority of 26 U.S.C. 7805, the notice of proposed rulemaking (LR–62–84) amending 26 CFR part 1 that was published in the **Federal Register** on May 29, 1984 (49 FR 22343) is withdrawn. In addition, 26 CFR parts 1, 5f, and 31 are proposed to be amended as follows:

PART 1—INCOME TAXES

Paragraph 1. The authority citation for part 1 is amended by adding an entry in numerical order to read in part as follows:

Authority: 26 U.S.C. 7805 * * *.
Section 1.6041–1 also issued under 26 U.S.C. 6041(a). * * *

Par. 2. Section 1.6041–1 is amended by:

1. Removing the language ''paragraph (g)'' in the second sentence of paragraph (b)(1) and adding the language ''paragraph (i)'' in its place.
2. Adding two sentences after the fourth sentence of paragraph (c).
3. Redesignating paragraphs (e) through (g) as paragraphs (g) through (i).
4. Adding new paragraphs (e) and (f), and (j).

The additions and revisions read as follows:

§ 1.6041–1 Return of information as to payments of $600 or more.

* * * * *

(c) * * * A payment made jointly to two or more payees may be fixed and determinable income to one payee even though the payment is not fixed and determinable income to another payee. For example, property insurance proceeds paid jointly to the owner of damaged property and to a contractor that repairs the property may be fixed and determinable income to the contractor but not fixed and determinable income to the owner.

* * *

* * * * *

(e) *Payment made on behalf of another person*—(1) *In general.* A person that makes a payment in the course of its trade or business on behalf of another person is the payor that must make a return of information under this section with respect to that payment if the payment is described in paragraph (a) of this section and, under all the facts and circumstances, that person—

(i) Performs management or oversight functions (*i.e.,* performs more than mere administrative or ministerial functions) in connection with the payment; or

(ii) Has a significant economic interest in the payment.

(2) *Optional method to report.* A person that makes a payment on behalf of another person but is not required to make an information return under paragraph (e)(1) of this section may elect to do so pursuant to the procedures established in Rev. Proc. 84–33 (1984–1 C.B. 502) (optional method for a paying agent to report and deposit amounts withheld for payors under the statutory provisions of backup withholding) (see § 601–601(d)(2) of this chapter).

(3) *Examples.* The provisions of this paragraph (e) are illustrated by the following examples:

Example 1. Bank B provides financing to C, a real estate developer, for a construction project. B puts the funds in an escrow account and makes disbursements from the account for labor, materials, services, and other expenses related to the construction project. In connection with the payments, B performs the following functions on behalf of C: approves payments to the general contractor or subcontractors; ensures that loan proceeds are properly applied and that all approved bills are properly paid to avoid mechanics or materialmen's liens; conducts site inspections to determine whether work has been completed (but does not check the quality of the work); evaluates and assesses the cost of the project, including costs of changes; and communicates resulting concerns to C or to the general contractor so that modifications can be made or additional funding obtained. B is performing

management or oversight functions in connection with the payment and is subject to the information reporting requirements of section 6041 with respect to payments from the escrow fund.

Example 2. Mortgage company D holds a mortgage on business property owned by E. When the property is damaged by a storm E's insurance company issues a check payable to both D and E in settlement of E's claim. Pursuant to the contract between D and E, D holds the insurance proceeds in an escrow account and makes disbursements according to E's instructions to contractors and subcontractors performing repairs on the property. D is not performing management or oversight functions, but D has a significant economic interest in the payments because the purpose of the arrangement is to ensure that property on which D holds a mortgage is repaired or replaced. D is subject to the information reporting requirements of section 6041 with respect to the payments to contractors.

Example 3. Settlement agent F provides real estate closing services to real estate brokers and agents. F deposits money received from the buyer or lender in an escrow account and makes payments from the account to real estate agents or brokers, appraisers, land surveyors, building inspectors, or similar service providers according to the provisions of the real estate contract and written instructions from the lender. F may also make disbursements pursuant to verbal instructions of the seller or purchaser at closing. F is not performing management or oversight functions and does not have a significant economic interest in the payments, and is not subject to the information reporting requirements of section 6041. For the rules relating to F's obligation to report the gross proceeds of the sale, see section 6045(e) and § 1.6045–4.

Example 4. Assume the same facts as in *Example 3,* except that the seller instructs F to hire a contractor to perform repairs on the property. F selects the contractor, negotiates the cost, monitors the progress of the project, and inspects the work to ensure it complies with the contract. With respect to the payments to the contractor, F is performing management or oversight functions and is subject to the information reporting requirements of section 6041.

Example 5. Real estate agent G manages certain rental property on behalf of property owner H. In addition to collecting the rent G arranges for various services that are needed to maintain the property (e.g., painting, repairs, lawn mowing, etc.), determines that the services have been satisfactorily performed, and pays the service providers. G is performing management or oversight functions and is subject to the information reporting requirements of section 6041 with respect to the payments to the service providers. With respect to the payments of rent to H, see § 1.6041–3(d).

Example 6. Literary agent J receives a payment from publisher L of fees earned by J's client, author K. J deposits the payment into a bank account in J's name and pays K the net amount after subtracting J's commission. From time to time and as directed by K, J also makes payments to attorneys, managers, and other third parties from these funds for services rendered to K. J does not order or direct the provision of services by the third parties to K, and J exercises no discretion in making the payments to them. J is not performing management or oversight functions and does not have a significant economic interest in the payments, and is not subject to the information reporting requirements of section 6041 in connection with the payments to K or to the third parties. For the rules relating to L's obligation to report the payment of the fees to K, see paragraphs (a)(1)(i) and (f) of this section. For the rules relating to K's obligation to report the payment of the commission to J and the payments to the third parties for services, see paragraphs (a)(1)(i) and (d)(2) of this section.

Example 7. Attorney P deposits into a client trust fund a settlement payment from R, the defendant in a breach of contract action for lost profits in which P represented plaintiff Q. P makes payments from the client trust fund to service providers such as expert witnesses and private investigators for expenses incurred in the litigation. P decides whom to hire, negotiates the amount of payment, and determines that the services have been satisfactorily performed. In the event of a dispute with a service provider, P withholds payment until the dispute is settled. With respect to payments to the service providers P is performing management or oversight functions and is subject to the information reporting requirements of section 6041.

Example 8. Assume the same facts as in *Example 7*, except that after paying the service providers and deducting his legal fee, P pays Q the remaining funds that P had received from the settlement with R. With respect to the payment to Q, P is not performing management or oversight functions and does not have a significant economic interest in the payment, and is not subject to the information reporting requirements of section 6041. For the rules relating to R's obligation to report the payment of the settlement proceeds to P, see section 6045(f) and § 1.6045–5. For the rules relating to R's obligation to report the payment of the settlement proceeds to Q, see paragraphs (a)(1)(i) and (f) of this section. For the rules relating to Q's obligation to report the payment of attorney fees to P, see paragraphs (a)(1)(i) and (d)(2) of this section.

Example 9. Medical insurer S operates as the administrator of a health care program under a contract with a state. S makes payments of government funds to health care providers who provide care to eligible patients. S receives and reviews claims submitted by patients or health care providers, determines if the claims meet all the requirements of the program (e.g., that the care is authorized and that the patients are eligible beneficiaries), and determines the amount of payment. S is performing management or oversight functions and is subject to the information reporting requirements of section 6041 with respect to the payments.

Example 10. Race track employee T holds deposits made by horse owner U in a special escrow account in U's name. U enters into a contract with jockey V to ride U's horse in a race at the track. As directed by U, T pays V the fee for riding U's horse from U's escrow account. T is not performing management or oversight functions and does not have a significant economic interest in the payment, and is not subject to the information reporting requirements of section 6041. For the rules relating to U's obligation to report the payment of the fee to V, see paragraph (a)(1)(i) of this section.

Example 11. Bank W collects payments from mortgagors and remits the amounts to the mortgagees or credits their accounts. W performs no other task with respect to the mortgage payments and has no other interest in the accounts. Although W collects payments on a regular and continuing basis, W is not performing management or oversight functions and does not have a significant economic interest in the payments, and is not subject to the information reporting requirements of section 6041 with respect to the payments.

(f) *Amount to be reported when fees, expenses or commissions are deducted*—(1) *In general.* The amount to be reported as paid to a payee is the gross amount of the payment or payments before fees, commissions, expenses, or other amounts owed by the payee to another person have been deducted, whether the payment is made jointly or separately to the payee and the other person.

(2) *Examples.* The provisions of this paragraph (f) are illustrated by the following examples:

Example 1. Attorney P represents client Q in a breach of contract action for lost profits against defendant R. R settles the case for $100,000 damages and $40,000 for attorney fees. R issues a check payable to P and Q in the amount of $140,000. R is required to make an information return reporting a payment to Q in the amount of $140,000.

Example 2. Assume the same facts as in Example 1, except that R issues a check to Q for $100,000 and a separate check to P for $40,000. R is required to make an information return reporting a payment to Q in the amount of $140,000.

* * * * *

(j) *Effective date.* The provisions of paragraphs (b), (c), (e), and (f) of this section apply to payments made on or after the beginning of the first calendar year that begins after these regulations are published in the **Federal Register** as final regulations.

§ 1.6041–3 [Amended]

Par. 3. Section 1.6041–3, as in effect on January 1, 2001, is amended as follows:

1. In paragraph (d), removing the language ''(but the agent is subject to the requirements of paragraph (a)(1)(ii) and (2)(ii) of § 1.6041–1)'' and adding the language ''(but the agent is required to report payments of rent to the landlord

in accordance with § 1.6041–1)(a)(1)(i)(B) and (2)'' in its place.

2. Removing paragraph (n) and redesignating paragraphs (o) through (q) as paragraphs (n) through (p).

Par. 4. Section 1.6045–1, as in effect on January 1, 2001, is amended as follows:

1. Revising paragraph (a) introductory text.

2. Revising paragraphs (c)(3) and (c)(4).

3. Removing the language ''5f.6045–1(c)(3)(ii) of this chapter'' and adding the language ''paragraph (c)(3)(iii) of this section'' in its place in each place it appears in paragraph (g)(4) *Examples 1, 4, 5, 6,* and *7*(i).

The revisions read as follows:

§ 1.6045–1 Returns of information of brokers and barter exchanges.

(a) *Definitions.* The following definitions apply for purposes of this section and § 1.6045–2:

* * * * *

(c) * * *

(3) *Exceptions*—(i) *Sales effected for exempt recipients*—

(A) *In general.* No return of information is required with respect to a sale effected for a customer that is an exempt recipient under paragraph (c)(3)(i)(B) of this section.

(B) *Exempt recipient defined.* The term *exempt recipient* means—

(*1*) A corporation as defined in section 7701(a)(3), whether domestic or foreign;

(*2*) An organization exempt from taxation under section 501(a) or an individual retirement plan;

(*3*) The United States or a State, the District of Columbia, a possession of the United States, a political subdivision of any of the foregoing, a wholly-owned agency or instrumentality of any one or more of the foregoing, or a pool or partnership composed exclusively of any of the foregoing;

(*4*) A foreign government, a political subdivision thereof, an international organization, or any wholly-owned agency or instrumentality of the foregoing;

(*5*) A foreign central bank of issue as defined in § 1.895–1(b)(1) (i.e., a bank that is by law or government sanction the principal authority, other than the government itself, issuing instruments intended to circulate as currency);

(*6*) A dealer in securities or commodities registered as such under the laws of the United States or a State;

(*7*) A futures commission merchant registered as such with the Commodity Futures Trading Commission;

(*8*) A real estate investment trust (as defined in section 856);

(*9*) An entity registered at all times during the taxable year under the Investment Company Act of 1940 (15 U.S.C. 80a–1, *et seq.*);

(*10*) A common trust fund (as defined in section 584(a)); or

(*11*) A financial institution such as a bank, mutual savings bank, savings and loan association, building and loan association, cooperative bank, homestead association, credit union, industrial loan association or bank, or other similar organization.

(C) *Exemption certificate.* A broker may treat a person described in paragraph (c)(3)(i)(B) of this section as an exempt recipient based on a properly completed exemption certificate (as provided in § 31.3406(h)–3) of this chapter or on the broker's actual knowledge that the payee is a person described in paragraph (c)(3)(i)(B) of this section. A broker may require an exempt recipient to file a properly completed exemption certificate and may treat an exempt recipient that fails to do so as a recipient that is not exempt.

(ii) *Excepted sales.* No return of information is required with respect to a sale effected by a broker for a customer if the sale is an excepted sale. For this purpose, a sale is an excepted sale if it is so designated by the Internal Revenue Service in a revenue ruling or revenue procedure (see § 601.601(d)(2) of this chapter).

(iii) *Multiple brokers.* If a broker is instructed to initiate a sale by a person that is an exempt recipient described in paragraph (c)(3)(i)(B)(*6*), (*7*), or (*11*) of this section, no return of information is required with respect to the sale by that broker. In a redemption of stock or retirement of securities, only the broker responsible for paying the holder redeemed or retired, or crediting the gross proceeds on the sale to that holder's account, is required to report the sale.

(iv) *Cash on delivery transactions.* In the case of a sale of securities through a cash on delivery account, a delivery versus payment account, or other similar account or transaction, only the broker that receives the gross proceeds from the sale against delivery of the securities sold is required to report the sale. If, however, the broker's customer is another broker (second-party broker) that is an exempt recipient, then only the second-party broker is required to report the sale.

(v) *Fiduciaries and partnerships.* No return of information is required with respect to a sale effected by a custodian or trustee in its capacity as such or a redemption of a partnership interest by a partnership provided the sale is otherwise reported by the custodian or trustee on a properly filed Form 1041, or the redemption is otherwise reported by the partnership on a properly filed Form 1065, and all Schedule K–1 reporting requirements are satisfied.

(vi) *Sales at issue price.* No return of information is required with respect to a sale of an interest in a regulated investment company (within the meaning of section 851) that computes its current price per share for purposes of distributions, redemptions, and purchases so as to stabilize the price per share at a constant amount that approximates its issue price or the price at which it was originally sold to the public.

(vii) *Obligor payments on certain obligations.* No return of information is required with respect to payments representing obligor payments on—

(A) Nontransferable obligations (including savings bonds, savings accounts, checking accounts, and NOW accounts);

(B) Obligations as to which the entire gross proceeds are reported by the broker on Form 1099 under provisions of the Internal Revenue Code other than section 6045 (including stripped coupons issued prior to July 1, 1982); or

(C) Retirement of short-term obligations (*i.e.*, obligations with a fixed maturity date not exceeding 1 year from the date of issue) that have original issue discount, as defined in section 1273(a)(1).

(viii) *Callable obligations.* No return of information is required with respect to payments representing obligor payments on demand obligations that also are callable by the obligor and that have no premium or discount.

(ix) *Foreign currency.* No return of information is required with respect to a sale of foreign currency other than a sale pursuant to a forward contract or regulated futures contract that requires delivery of foreign currency.

(x) *Fractional share.* No return of information is required with respect to a sale of a fractional share of stock if the gross proceeds on the sale of the fractional share are less than $20.

(xi) *Certain retirements.* No return of information is required from an issuer or its agent with respect to the retirement of book entry or registered form obligations as to which the relevant books and records indicate that no interim transfers have occurred.

(xii) *Cross reference.* For an exception for certain sales of agricultural commodities and certificates issued by the Commodity Credit Corporation after January 1, 1993, see paragraph (c)(7) of this section.

(xiii) *Effective date.* The provisions of this paragraph (c)(3) apply for sales effected on or after the beginning of the

first calendar year that begins after the date these regulations are published in the **Federal Register** as final regulations.

(4) *Examples.* The following examples illustrate the application of the rules in paragraph (c)(3) of this section:

Example 1. P, an individual who is not an exempt recipient, places an order with B, a person generally known in the investment community to be a federally registered broker/dealer, to sell P's stock in a publicly traded corporation. B, in turn, places an order to sell the stock with C, a second broker, which will execute the sale. B discloses to C the identity of the customer placing the order. C is not required to make a return of information with respect to the sale because C was instructed by B, an exempt recipient as defined in paragraph (c)(3)(i)(B)(*6*) of this section, to initiate the sale. B is required to make a return of information with respect to the sale because P is B's customer and is not an exempt recipient.

Example 2. Assume the same facts as in Example 1 except that B has an omnibus account with C so that B does not disclose to C whether the transaction is for a customer of B or for B's own account. C is not required to make a return of information with respect to the sale because C was instructed by B, an exempt recipient as defined in paragraph (c)(3)(i)(B)(*6*) of this section, to initiate the sale. B is required to make a return of information with respect to the sale because P is B's customer and is not an exempt recipient.

Example 3. D, an individual who is not an exempt recipient, enters into a cash on delivery stock transaction by instructing K, a federally registered broker/dealer, to sell stock owned by D, and to deliver the proceeds to L, a custodian bank. Concurrently with the above instructions, D instructs L to deliver D's stock to K (or K's designee) against delivery of the proceeds from K. The records of both K and L with respect to this transaction show an account in the name of D. Pursuant to paragraph (h)(1) of this section, D is considered the customer of K and L. Under paragraph (c)(3)(iv) of this section, K is not required to make a return of information with respect to the sale because K will pay the gross proceeds to L against delivery of the securities sold. L is required to make a return of information with respect to the sale because D is L's customer and is not an exempt recipient.

Example 4. Assume the same facts as in Example 3 except that E, a federally registered investment adviser, instructs K to sell stock owned by D and to deliver the proceeds to L. Concurrently with the above instructions, E instructs L to deliver D's stock to K (or K's designee) against delivery of the proceeds from K. The records of both K and L with respect to the transaction show an account in the name of D. Pursuant to paragraph (h)(1) of this section, D is considered the customer of K and L. Under paragraph (c)(3)(iv) of this section, K is not required to make a return of information with respect to the sale because K will pay the gross proceeds to L against delivery of the securities sold. L is required to make a return of information with respect to the sale because D is L's customer and is not an exempt recipient.

Example 5. Assume the same facts as in Example 4 except that the records of both K and L with respect to the transaction show an account in the name of E. Pursuant to paragraph (h)(1) of this section, E is considered the customer of K and L. Under paragraph (c)(3)(iv) of this section, K is not required to make a return of information with respect to the sale because K will pay the gross proceeds to L against delivery of the securities sold. L is required to make a return of information with respect to the sale because E is L's customer and is not an exempt recipient. E is required to make a return of information with respect to the sale because D is E's customer and is not an exempt recipient.

Example 6. F, an individual who is not an exempt recipient, owns bonds that are held by G, a federally registered broker/dealer, in an account for F with G designated as nominee for F. Upon the retirement of the bonds, the gross proceeds are automatically credited to the account of F. G is required to make a return of information with respect to the retirement because G is the broker responsible for making payments of the gross proceeds to F.

* * * * *

§ 1.6045–2 [Amended]

Par. 5. In § 1.6045–2, paragraph (b)(2)(ii), is amended by removing the language ''§ 5f.6045–1(c)(3)(i)(B) of the Temporary Income Tax Regulations under the Tax Equity and Fiscal Responsibility Act of 1982'' and adding the language ''§ 1.6045–1(c)(3)(i)(B)'' in its place.

Par. 6. In § 1.6049–4, as in effect on January 1, 2001, paragraph (a)(2) is revised to read as follows:

§ 1.6049–4 Return of information as to interest paid and original issue discount includible in gross income after December 31, 1982.

(a) * * *

(2) *Payor.* For payments made on or after the beginning of the first calendar year that begins after the date these regulations are published in the **Federal Register** as final regulations, a payor is a person described in paragraph (a)(2)(i) or (ii) of this section.

(i) Every person who makes a payment of the type and of the amount subject to reporting under this section (or under an applicable section under this chapter) to any other person during a calendar year.

(ii) Every person who collects on behalf of another person payments of the type and of the amount subject to reporting under this section (or under an applicable section under this chapter), or who otherwise acts as a middleman (as defined in paragraph (f)(4) of this section) with respect to such payment.

* * * * *

PART 5f—TEMPORARY INCOME TAX REGULATIONS UNDER THE TAX EQUITY AND FISCAL RESPONSIBILITY ACT OF 1982

Par. 7. The authority citation for part 5f is amended by removing the authority citation for Sec. 5f.6045–1 to read in part as follows:

Authority: 26 U.S.C. 7805 * * *

§ 5f.6045–1 [Removed]

Par. 8. Section 5f.6045–1 is removed.

PART 31—EMPLOYMENT TAXES AND COLLECTION OF INCOME TAX AT SOURCE

Par. 9. The authority citation for part 31 continues to read in part as follows:

Authority: 26 U.S.C. 7805 * * *

Par. 10. Section 31.3406–0 is amended by:

1. Revising the entry for § 31.3406(a)–2, paragraph (b).

2. Adding an entry for § 31.3406(a)–2, paragraph (d).

The revision and addition read as follows:

§ 31.3406–0 Outline of the backup withholding regulations.

* * * * *

§ 31.3406(a)–2 Definition of payors obligated to backup withhold.

* * * * *

(b) Persons treated as payors.

* * * * *

(d) Effective date.

* * * * *

Par. 11. Section 31.3406(a)–2 is revised to read as follows:

§ 31.3406(a)–2 Definition of payors obligated to backup withhold.

(a) *In general. Payor* means the person that is required to make an information return under section 6041, 6041A(a), 6042, 6044, 6045, 6049, 6050A, or 6050N, with respect to any reportable payment (as described in section 3406(b)), or that is described in paragraph (b) of this section.

(b) *Persons treated as payors.* The following persons are treated as payors for purposes of section 3406—

(1) A grantor trust established after December 31, 1995, all of which is owned by two or more grantors, and for this purpose spouses filing a joint return are considered to be one grantor;

(2) A grantor trust with ten or more grantors established on or after January 1, 1984 but before January 1, 1996;

(3) A common trust fund; and

(4) A partnership or an S corporation that makes a reportable payment.

(c) *Persons not treated as payors.* The following persons are not treated as payors for purposes of section 3406 if the person does not have a reporting obligation under the section on information reporting to which the payment relates—

(1) A trust (other than a grantor trust as described in paragraph (b)(1) or (2) of this section) that files a Form 1041 containing information required to be shown on an information return, including amounts withheld under section 3406; or

(2) A partnership making a payment of a distributive share or an S corporation making a similar distribution.

(d) *Effective date.* The provisions of this section apply to payments made on or after the beginning of the first calendar year that begins after these regulations are published in the **Federal Register** as final regulations.

§ 31.3406(a)–4 [Amended]

Par. 12. Section 31.3406(a)–4 is amended as follows:

1. In paragraph (c)(1), first sentence, removing the language ''Any middleman (as defined in § 31.3406(a)–2(b))'' and adding the language ''A middleman payor (as defined in § 31.3406(a)–2(b) or in the section on information reporting to which the payment relates)'' in its place.

2. In paragraph (c)(3), first sentence, removing the language ''§ 31.3406(a)–2(b)(4)'' and adding the language ''§ 31.3406(a)–2(b)(1) or (2)'' in its place.

§ 31.3406(b)(3)–2 [Amended]

Par. 13. In § 31.3406(b)(3)–2, paragraph (b)(5) is amended by removing the language ''§ 5f.6045–1(c)(3)(ix)'' and adding the language ''§ 1.6045–1(c)(3)(x)'' in its place.

§ 31.3406(d)–4 [Amended]

Par. 14. In § 31.3406(d)–4, paragraph (a)(1) introductory text is amended by removing the language ''the payor of the instrument (as defined in § 31.3406(a)–2(b)(3)),'' and adding the language ''a broker holding a security (including stock) for a customer in street name,'' in its place.

§ 31.3406(h)–1 [Amended]

Par. 15. In § 31.3406(h)–1, paragraph (c), second sentence, is amended by removing the language ''§ 5f.6045–1(c)(3)(ii) and (iii)'' and adding the language ''§ 1.6045–1(c)(3)(iii) and (iv)'' in its place.

§ 31.3406(h)–2 [Amended]

Par. 16. Section 31.3406(h)–2 is amended as follows:

1. In paragraph (c), third sentence, removing the language ''with two or more grantors described in § 31.3406(a)–2(b)(4), which is treated as a middleman payor'' and adding the language ''described in § 31.3406(a)–2(b)(1) or (2), which is treated as a payor'' in its place.

2. In paragraph (d), first sentence, removing the language ''A middleman payor (as defined in § 31.3406(a)–2(b)'' and adding the language ''A middleman payor (as defined in § 31.3406(a)–2(b) or in the section on information reporting to which the payment relates)'' in its place.

3. In paragraph (f)(6), removing the language ''§ 31.3406(a)–2(a)'' and adding the language ''§ 31.3406(a)–2'' in its place.

Robert E. Wenzel,

Deputy Commissioner of Internal Revenue.

[FR Doc. 00–26204 Filed 10–16–00; 8:45 am]

BILLING CODE 4830–01–U

FEDERAL COMMUNICATIONS COMMISSION

47 CFR Part 73

[DA 00–2303, MM Docket No. 00–198, RM–9980]

Digital Television Broadcast Service; Corpus Christi, TX

AGENCY: Federal Communications Commission.

ACTION: Proposed rule.

SUMMARY: The Commission requests comments on a petition filed by KVOA Communications, Inc., licensee of station KRIS–TV, NTSC Channel 6, Corpus Christi, Texas, requesting the substitution of DTV 13 for station KRIS–TV's assigned DTV Channel 50. DTV Channel 13 can be allotted to Corpus Christi, Texas, in compliance with the principle community coverage requirements of section 73.625(a) at reference coordinates 27–44–28 N and 97–36–08 W with a power of 160 (kW) and a height above average terrain (HAAT) of 291 meters. However, since the community of Corpus Christi is located within 275 kilometers of the U.S.-Mexican border, concurrence by the Mexican government must be obtained for this allotment.

DATES: Comments must be filed on or before December 4, 2000, and reply comments on or before December 19, 2000.

ADDRESSES: Federal Communications Commission, 445 12th Street, SW., Room TW–A325, Washington, DC 20554. In addition to filing comments with the FCC, interested parties should serve the petitioner, or its counsel or consultant, as follows: Scott S. Patrick, Dow, Lohnes & Albertson, 1200 New Hampshire Avenue, NW., Suite 800, Washington, DC 20036–6802 (Counsel for KVOA Communications, Inc.).

FOR FURTHER INFORMATION CONTACT: Pam Blumenthal, Mass Media Bureau, (202) 418–1600.

SUPPLEMENTARY INFORMATION: This is a synopsis of the Commission's Notice of Proposed Rule Making, MM Docket No. 00–198, adopted October 12, 2000, and released October 13, 1999. The full text of this Commission decision is available for inspection and copying during normal business hours in the FCC Reference Center, 445 12th Street, SW., Washington, DC. The complete text of this decision may also be purchased from the Commission's copy contractor, International Transcription Services, Inc., (202) 857–3800, 1231 20th Street, NW., Washington, DC 20036.

Provisions of the Regulatory Flexibility Act of 1980 do not apply to this proceeding.

Members of the public should note that from the time a Notice of Proposed Rule Making is issued until the matter is no longer subject to Commission consideration or court review, all *ex parte* contacts are prohibited in Commission proceedings, such as this one, which involve channel allotments. See 47 CFR 1.1204(b) for rules governing permissible *ex parte* contacts.

For information regarding proper filing procedures for comments, see 47 CFR 1.415 and 1.420.

Federal Communications Commission.

Barbara A. Kreisman,

Chief, Video Services Division, Mass Media Bureau.

[FR Doc. 00–26666 Filed 10–16–00; 8:45 am]

BILLING CODE 6712–01–P

Notices

Federal Register

Vol. 65, No. 201

Tuesday, October 17, 2000

This section of the FEDERAL REGISTER contains documents other than rules or proposed rules that are applicable to the public. Notices of hearings and investigations, committee meetings, agency decisions and rulings, delegations of authority, filing of petitions and applications and agency statements of organization and functions are examples of documents appearing in this section.

DEPARTMENT OF AGRICULTURE

Office of the Secretary

Notice of Solicitation for Membership to the National Agricultural Research, Extension, Education, and Economics Advisory Board

AGENCY: Research, Education, and Economics, USDA.

ACTION: Solicitation for membership.

SUMMARY: In accordance with the Federal Advisory Committee Act, 5 U.S.C. app., the United States Department of Agriculture announces the appointments to the 10 vacancies on the National Agricultural Research, Extension, Education, and Economics Advisory Board.

DATES: Appointments are for a 3-year term, effective from October 1, 2000, until September 30, 2003 (pending reauthorization of the Advisory Board beyond September 30, 2002, Pub. L. 104–127, Sec. 802).

SUPPLEMENTARY INFORMATION: Section 802 of the Federal Agricultural Improvement and Reform Act of 1996 (The Farm Bill) authorized the creation of the National Agricultural Research, Extension, Education, and Economics Advisory Board. The Board is composed of 30 members, each representing a specific category related to farming or ranching, food production and processing, forestry research, crop and animal science, land-grant institutions, food retailing and marketing, rural economic development, and natural resource and consumer interest groups, among many others. The Board was first appointed in September 1996 and one-third of the 30 members were appointed for a 1, 2, and 3-year term, respectively.

As a result of the staggered appointments, the terms for 10 of the 30 members who represent 10 specific categories expired September 30, 2000. The Secretary of Agriculture made 3-year appointments for all 10 of the vacant categories. Appointees by category of the 10 new members are as follows: Representing Category A, National Farm Organization, Ronald R. Warfield, President of the Illinois Farm Bureau and Director of the American Farm Bureau Federation Executive Committee, was reappointed to a second term, Bloomington, Illinois; Category C. Food Animal Commodity Producer, Patricia Blum, beef rancher for 40 years and past President of South Dakota Beef Industry Council, Reliance, South Dakota; Category F. National Crop Commodity Organization, Marc S. Curtis, National and State President of the American Soybean Association, and farmer of rice, wheat, corn and soybeans, Leland, Mississippi; Category K. National Human Health Association, Judith S. Stern, Professor, Department of Internal Medicine, Division of Endocrinology, Clinical Nutrition and Vascular Medicine, University of California-Davis, California; Category P. Hispanic-Serving Institutions, John Cordova, President, South Mountain Community College, Maricopa Community College System, Phoenix, Arizona; Category Q. American Colleges of Veterinary Medicine, Oscar J. Fletcher, Dean, College of Veterinary Medicine and Professor of Farm Animal Health and Resource Management, North Carolina State University, Raleigh, North Carolina; Category S. Transportation of Food and Agricultural Products to Domestic and Foreign Markets, Emma Jean Cervantes, President of Cervantes Enterprises/Agribusiness, 35-year producer of chile peppers, cotton, alfalfa, vegetables, and pecans, La Mesa, New Mexico, previously appointed to a 1-year term and was reappointed to a full term; Category U. Food and Fiber Processors, John Rogers Farquharson, President of the International Food Safety Council, and Executive Emeritus, ARAMARK Corporation, Sewell, New Jersey, was reappointed to a second term; Category Z. Private Sector Organization involved in International Development, Shirley Dunlap Bowser, a diversified family farmer, engaged in the international dimension of agriculture, and Chair of W.K. Kellogg Foundation Board, Williamsport, Ohio; and Category CC. National Social Science Association, Jean Clarkson-Frisbie, Pratt County Extension Agent, Family and Consumer Sciences & R-H and Youth, Cooperative Extension Service, Kansas State University, Pratt, Kansas. Appointees term will begin on October 1, 2000 and end September 30, 2003 (pending reauthorization of the Advisory Board beyond September 30, 2002). They will actively participate in their first meeting October 16–18, 2000, beginning at 9 a.m. October 16–17 and from 8 a.m.–12 noon October 18, at the Loew's L'Enfant Plaza Hotel, Ballroom A, Section A, 480 L'Enfant Plaza, SW., Washington, DC.

FOR FURTHER INFORMATION CONTACT: Deborah Hanfman, Executive Director, National Agricultural Research, Extension, Education, and Economics Advisory Board, Research, Education, and Economics Advisory Board Office, Room 344A, Jamie L. Whitten Building, U.S. Department of Agriculture, STOP: 2255, 1400 Independence Avenue, SW., Washington, DC 20250–2255. Telephone: 202–720–3684. Fax: 202–720–6199, or e-mail: lshea@reeusda.gov.

Eileen Kennedy,

Deputy Under Secretary, Research, Education, and Economics.

[FR Doc. 00–26650 Filed 10–16–00; 8:45 am]

BILLING CODE 3410–22–P

DEPARTMENT OF AGRICULTURE

Agricultural Research Service

Notice of Federal Invention Available for Licensing and Intent To Grant Exclusive License

AGENCY: Agricultural Research Service, USDA.

ACTION: Notice of availability and intent.

SUMMARY: Notice is hereby given that the table grape variety designated ''Summer Royal'' is available for licensing and that the U.S. Department of Agriculture, Agricultural Research Service, intends to grant to the California Table Grape Commission of Fresno, California, an exclusive license to this variety in selected countries outside the United States where breeder's rights are available.

DATES: Comments must be received on or before January 16, 2001.

ADDRESSES: Send comments to: USDA, ARS, Office of Technology Transfer, 5601 Sunnyside Avenue, Rm. 4–1158, Beltsville, Maryland 20705–5131.

FOR FURTHER INFORMATION CONTACT: June Blalock of the Office of Technology

Transfer at the Beltsville address given above; telephone: 301–504–5257.

SUPPLEMENTARY INFORMATION: The Federal Government's intellectual property rights to this invention are assigned to the United States of America, as represented by the Secretary of Agriculture. It is in the public interest to so license this invention as the California Table Grape Commission has submitted a complete and sufficient application for a license. The prospective exclusive license will be royalty-bearing and will comply with the terms and conditions of 35 U.S.C. 209 and 37 CFR 404.7. The prospective exclusive license may be granted unless, within ninety (90) days from the date of this published Notice, the Agricultural Research Service receives written evidence and argument which establishes that the grant of the license would not be consistent with the requirements of 35 U.S.C. 209 and 37 CFR 404.7.

Richard M. Parry, Jr.,

Assistant Administrator.

[FR Doc. 00–26651 Filed 10–16–00; 8:45 am]

BILLING CODE 3410–03–P

DEPARTMENT OF AGRICULTURE

Animal and Plant Health Inspection Service

[Docket No. 98–057–2]

Availability of Draft Pest Risk Assessment for the Importation of Solid Wood Packing Materials Into the United States

AGENCY: Animal and Plant Health Inspection Service, USDA.

ACTION: Notice and request for comments.

SUMMARY: We are advising the public that a draft pest risk assessment has been prepared by the Animal and Plant Health Inspection Service for the importation of solid wood packing materials into the United States. We are making this draft pest risk assessment available to the public for review and comment.

DATES: We invite you to comment on the draft pest risk assessment. We will consider all comments that we receive by February 15, 2001.

ADDRESSES: Please send your comment and three copies to: Docket No. 98–057–2, Regulatory Analysis and Development, PPD, APHIS, Suite 3C03, 4700 River Road, Unit 118, Riverdale, MD 20737–1238

Please state that your comment refers to Docket No. 98–057–2.

You may also file comments on this docket electronically, and review comments filed electronically, at the World Wide Web site http://comments.aphis.usda.gov.

A copy of the draft pest risk assessment, and any comments that we receive on it, may be reviewed in our reading room. The reading room is located in room 1141 of the USDA South Building, 14th Street and Independence Avenue, SW., Washington, DC. Normal reading room hours are 8 a.m. to 4:30 p.m., Monday through Friday, except holidays. To be sure someone is there to help you, please call (202) 690–2817 before coming.

FOR FURTHER INFORMATION CONTACT: Dr. Judith E. Pasek, Center for Plant Health Science and Technology, PPQ, APHIS, 1017 Main Campus Drive, Suite 2500, Raleigh, NC 27606–5202; (919) 513–2400.

SUPPLEMENTARY INFORMATION: The Animal and Plant Health Inspection Service (APHIS) is considering amending the regulations on the importation of logs, lumber, and other unmanufactured wood articles to decrease the risk of solid wood packing material (*e.g.,* crates, dunnage, wooden spools, pallets, packing blocks) introducing exotic plant pests into the United States. The regulations in 7 CFR 319.40–1 through 319.40–11 (referred to below as the regulations) are intended to mitigate the plant pest risk presented by the importation of logs, lumber, and other unmanufactured wood articles, including solid wood packing material (SWPM). Introductions into the United States of exotic plant pests such as the pine shoot beetle and the Asian longhorned beetle have been linked to the importation of SWPM. These and other plant pests that could be carried by imported SWPM pose a serious threat to U.S. agriculture and to natural, cultivated, and urban forests.

On January 20, 1999, we published an advance notice of proposed rulemaking in the **Federal Register** (64 FR 3049–3052, Docket No. 98–057–1) to seek information and develop regulatory options on the general problem of plant pests in SWPM imported from any country. In the notice, we requested public comment on what actions would be most effective and appropriate to further reduce the risk of SWPM introducing exotic plant pests into the United States. We received 102 comments in response to the advance notice of proposed rulemaking.

To evaluate the risks associated with the importation of solid wood packing materials so that we can propose regulations that are consistent with those risks, we have prepared a draft pest risk assessment entitled ''Pest Risk Assessment for the Importation of Solid Wood Packing Materials Into the United States.''

The specific objectives of this pest risk assessment are to:

- Describe the means by which pests could potentially be transported via SWPM (*i.e.,* pathways);
- Assess the potential for insect and pathogenic pests that may be transported with SWPM to enter the United States and become established; and
- Estimate the potential economic and environmental consequences these pests may have on forest and tree resources if they become established in the United States.

We are making this draft pest risk assessment available to the public for review and comment. In particular, we request feedback on the risk factors, methodology, and documentation used in the draft pest risk assessment. We will consider all comments that we receive by the date listed under the heading **DATES** at the beginning of this notice.

The draft pest risk assessment is available in our reading room (information on the location and hours of the reading room is listed under the heading **ADDRESSES** at the beginning of this notice) or on the Internet at *http://www.aphis.usda.gov/ppq/pra/swpm.* You may also request that a copy be mailed to you by registering at *http://www.aphis.usda.gov/ppq/pra/swpm* or by contacting the person listed under **FOR FURTHER INFORMATION CONTACT.** If you request that a copy be mailed to you, please specify whether you desire a printed copy or a copy on compact disk.

Authority: Title IV, Pub. L. 106–224, 114 Stat. 438, 7 U.S.C. 7701–7772; 7 U.S.C. 166 and 450; 7 CFR 2.22, 2.80, and 371.3.

Done in Washington, DC, this 11th day of October 2000.

Craig A. Reed,

Administrator, Animal and Plant Health Inspection Service.

[FR Doc. 00–26652 Filed 10–16–00; 8:45 am]

BILLING CODE 3410–34–P

DEPARTMENT OF AGRICULTURE

Forest Service

Newspapers Used for Publication of Legal Notice of Appealable Decisions for the Northern Region; Idaho, Montana, North Dakota, and Portions of South Dakota and Eastern Washington

AGENCY: Forest Service, USDA.

ACTION: Notice.

SUMMARY: This notice lists the newspapers that will be used by all Ranger Districts, Forests, and the Regional Office of the Northern Region to publish legal notice of all decisions subject to appeal under 36 CFR 215 and 217 and to publish notices for public comment and notice of decision subject to the provisions of 36 CFR 215. The intended effect of this action is to inform interested members of the public which newspapers will be used to publish legal notices for public comment or decisions; thereby allowing them to receive constructive notice of a decision, to provide clear evidence of timely notice, and to achieve consistency in administering the appeals process.

DATES: Publication of legal notices in the listed newspapers will begin with decisions subject to appeal that are made on or after October 15, 2000. The list of newspapers will remain in effect until another notice is published in the **Federal Register**.

FOR FURTHER INFORMATION CONTACT: Interregional NEPA, Appeals and Litigation Leader; Northern Region; P.O. Box 7669; Missoula, Montana 59807. Phone: (406) 329–3647.

The newspapers to be used are as follows:

Northern Regional Office

Regional Forester decisions in Montana: The Missoulian, Great Falls Tribune, and The Billings Gazette.

Regional Forester decisions in Northern Idaho and Eastern Washington: The Spokesman Review.

Regional Forester decisions in North Dakota: Bismarck Tribune.

Regional Forester decisions in South Dakota: Rapid City Journal.

Beaverhead/Deerlodge—Montana Standard
Bitterroot—Ravalli Republic
Clearwater—Lewiston Morning Tribune
Custer—Billings Gazette (Montana), Rapid City Journal (South Dakota)
Dakota Prairie National Grasslands—Bismarck Tribune (North Dakota), Rapid City Journal (South Dakota)
Flathead—Daily Interlake
Gallatin—Bozeman Chronicle
Helena—Independent Record
Idaho Panhandle—Spokesman Review
Kootenai—Daily Interlake
Lewis & Clark—Great Falls Tribune
Lolo—Missoulina
Nez Perce—Lewiston Morning Tribune

Supplemental notices may be placed in any newspaper, but time frames/deadlines will be calculated based upon notices in newspapers of record listed above.

Dated: October 10, 2000.

Kathleen A. McAllister,

Deputy Regional Forester.

[FR Doc. 00–26587 Filed 10–16–00; 8:45 am]

BILLING CODE 3410–11–M

DEPARTMENT OF AGRICULTURE

Forest Service

Application of Notice, Comment, and Appeal Procedures for Certain Projects and Activities

AGENCY: Forest Service, USDA.

ACTION: Notice.

SUMMARY: Pending the adoption of an interim final rule, the Forest Service will apply the notice, comment, and appeal procedures in 36 CFR part 215 to certain project and activity decisions. This action is required by the terms of a settlement agreement of litigation between the U.S. Forest Service and Heartwood, Incorporated.

EFFECTIVE DATE: Notice, comment, and appeal procedures apply to those project and activity decisions identified in the settlement agreement and made after October 24, 2000.

ADDRESSES: Written inquiries, as well as requests for the settlement agreement, may be sent to the Director, Ecosystem Management Coordination Staff, USDA Forest Service, P.O. Box 96090, Washington, DC 20090–6090.

FOR FURTHER INFORMATION CONTACT: Steve Segovia, Assistant Director for Appeals and Litigation, telephone (202) 205–1066; FAX (202) 205–1012.

SUPPLEMENTARY INFORMATION: In the matter of *Heartwood, Inc.* v. *U.S. Forest Service,* Civ. No. 99–4255 (S.D. III. Sept. 15, 2000), the agency and plaintiff entered a settlement agreement that the agency would promulgate an interim final rule settling forth the notice, comment, and appeal procedures at 36 CFR part 215 for the following projects and activities:

(1) Projects involving the use of prescribed burning;

(2) Projects involving the creation or maintenance of wildlife openings;

(3) The designation of travel routes for off-highway vehicle (OHV)(use which is not conducted through the travel management planning process as part of the forest planning process;

(4) The construction of new OHV routes and facilities intended to support OHV use;

(5) The upgrading, widening, or modification of OHV routes to increase either the levels or types of use by OHVs (but not projects performed for the maintenance of existing routes);

(6) The issuance or reissuance of special use permits for OHV activities conducted on areas, trails, or roads that are not designated for such activities;

(7) Projects in which the cutting of trees for thinning or wildlife purposes occurs over an area greater than 5 contiguous acres;

(8) Gathering geophysical data using shorthole, vibroseis, or surface charge;

(9) Trenching to obtain evidence of mineralization;

(10) Clearing vegetation for sight paths from areas used for mineral, energy, or geophysical investigation or support facilities for such activities.

At the time of publication of the interim rule, the agency also will invite public comment for consideration in adopting a final rule.

Pending adoption of this interim rule, the agency agreed to give notice in the **Federal Register** that it would apply these notice, comment, and appeal procedures as of the effective date given in the notice.

A copy of the settlement agreement is available by writing the address listed earlier in this notice or by logging onto the ''NEPA, NFMA and Appeals'' page of the Forest Service homepage of the World Wide Web, the address for which is http://www.fs.fed.us/forum/nepa.

Dated: October 11, 2000.

James R. Furnish,

Deputy Chief for National Forest System.

[FR Doc. 00–26567 Filed 10–16–00; 8:45 am]

BILLING CODE 3410–11–M

DEPARTMENT OF AGRICULTURE

Natural Resources Conservation Service

Notice of Proposed Changes to Section IV of the Field Office Technical Guide (FOTG) of the Natural Resources Conservation Service in Indiana

AGENCY: Natural Resources Conservation Service (NRCS).

ACTION: Notice of availability of proposed changes in Section IV of the FOTG of the NRCS in Indiana for review and comment.

SUMMARY: It is the intention of NRCS in Indiana to issue a revised conservation practice standard in Section IV of the FOTG. The revised standard is Wetland Enhancement (Code 659). This practice may be used in conservation systems that treat highly erodible land and/or wetlands.

DATES: Comments will be received on or before November 16, 2000.

ADDRESSES: Address all requests and comments to Jane E. Hardisty, State Conservationist, Natural Resources Conservation Service (NRCS), 6013 Lakeside Blvd., Indianapolis, Indiana 46278. Copies of this standard will be made available upon written request. You may submit your electronic requests and comments to darrell.brown@in.usda.gov.

FOR FURTHER INFORMATION CONTACT: Jane E. Hardisty, 317–290–3200.

SUPPLEMENTARY INFORMATION: Section 343 of the Federal Agriculture Improvement and Reform Act of 1996 states that after enactment of the law, revisions made to NRCS state technical guides used to carry out highly erodible land and wetland 2 provisions of the law, shall be made available for public review and comment. For the next 30 days, the NRCS in Indiana will receive comments relative to the proposed changes. Following that period, a determination will be made by the NRCS in Indiana regarding disposition of those comments and a final determination of changes will be made.

Dated: October 2, 2000.

Ron Lauster,

State Resource Conservationist, Indianapolis, Indiana.

[FR Doc. 00–26561 Filed 10–16–00; 8:45 am]

BILLING CODE 3410–16–P

COMMISSION ON CIVIL RIGHTS

Agenda and Notice of Public Meeting of the Florida Advisory Committee

Notice is hereby given, pursuant to the provisions of the rules and regulations of the U.S. Commission on Civil Rights, that a meeting of the Florida Advisory Committee to the Commission will convene at 1 p.m. and adjourn at 5 p.m. on Tuesday, November 14, 2000, at the Wyndham Orlando Hotel, 8001 International Drive, Orlando, Florida 32819. The purpose of the meeting is to provide new member orientation and discuss such topics as affirmative action in Florida, the Governor's ''One Florida Plan,'' immigration, education, and other current civil rights issues.

Persons desiring additional information or planning a presentation to the Committee should contact Bobby D. Doctor, Director of the Southern Regional Office, 404–562–7000 (TDD 404–562–7004). Hearing-impaired persons who will attend the meeting and require the services of a sign language interpreter should contact the Regional Office at least ten (10) working days before the scheduled date of the meeting.

The meeting will be conducted pursuant to the provisions of the rules and regulations of the Commission.

Dated at Washington, DC, October 11, 2000.

Lisa M. Kelly,

Special Assistant to the Staff Director, Regional Programs Coordination Unit.

[FR Doc. 00–26636 Filed 10–16–00; 8:45 am]

BILLING CODE 6335–01–P

DEPARTMENT OF COMMERCE

Bureau of the Census

[Docket Number 000913261–0261–01]

Change in Report Series From Print Publication to Internet Access

AGENCY: Bureau of the Census, Department of Commerce.

ACTION: Notice of publication program change.

SUMMARY: The Bureau of the Census (Census Bureau) will cease printed publication of the ''Monthly Product Announcement'' (MPA) with the December 2000 edition. The publication's information and additional data will be available at <www.census.gov> and as a free Internet subscription.

EFFECTIVE DATE: December 31, 2000.

FOR FURTHER INFORMATION CONTACT: Les Solomon, Marketing Services Office, Customer Services Center, Census Bureau, Washington, DC 20233, telephone: 301–457–1224.

SUPPLEMENTARY INFORMATION: The MPA lists all Census Bureau publications and data files for a 30-day period. It includes product ordering information and order forms. The MPA does not describe every data product, but usually does discuss one or two new ones in each issue.

The Census Bureau has decided to provide product information to the customer on a more timely basis. The new format will give the customer product information daily and allow the customer to purchase products immediately. We believe that changing to Internet access will not significantly affect the MPA's users. We will, however, address the needs of customers adversely affected by this change. Customers may request a paper copy that lists the Census Bureau's monthly releases by contacting the Customer Services Center at 301–457–4100.

Dated: October 11, 2000.

Kenneth Prewitt,

Director, Bureau of the Census.

[FR Doc. 00–26641 Filed 10–16–00; 8:45 am]

BILLING CODE 3510–01–P

DEPARTMENT OF COMMERCE

International Trade Administration

[A–570–862]

Initiation of Antidumping Duty Investigation: Foundry Coke Products From the People's Republic of China

AGENCY: Import Administration, International Trade Administration, Department of Commerce.

EFFECTIVE DATE: October 17, 2000.

FOR FURTHER INFORMATION CONTACT: James Doyle, Import Administration, International Trade Administration, U.S. Department of Commerce, 14th Street and Constitution Avenue, NW., Washington, DC 20230; telephone: (202) 482–0159.

Initiation of Investigation

The Applicable Statute and Regulations

Unless otherwise indicated, all citations to the statute are references to the provisions effective January 1, 1995, the effective date of the amendments made to the Tariff Act of 1930 (''Act'') by the Uruguay Round Agreements Act (''URAA''). In addition, unless otherwise indicated, all citations to the Department of Commerce's (''Department'') regulations are to 19 CFR part 351 (2000).

The Petition

On September 20, 2000, the Department received a petition on imports of foundry coke products from the People's Republic of China (''PRC'') filed in proper form by ABC Coke, Citizens Gas and Coke Utility, Erie Coke, Tonawanda Coke Corporation, and United Steelworkers of America, AFL–CIO, hereinafter referred to as ''the petitioners.'' On September 25, 2000, the Department received a supplement to the petition. On September 27, 2000, the Department requested clarification of certain areas of the petition and received a response on October 2, 2000.

In accordance with section 732(b) of the Act, the petitioners allege that imports of foundry coke products from

the PRC are being, or are likely to be, sold in the United States at less than fair value within the meaning of section 731 of the Act, and that such imports are materially injuring and threaten to injure an industry in the United States.

The Department finds that the petitioners filed this petition on behalf of the domestic industry because they are interested parties as defined in section 771(9)(C) and (D) of the Act and they have demonstrated sufficient industry support with respect to the antidumping duty investigation they are requesting the Department to initiate (*see* ''Determination of Industry Support for the Petition'' below).

Scope of Investigation

For purposes of this investigation, the product covered is coke larger than 100 mm (4 inches) in maximum diameter and at least 50 percent of which is retained on a 100-mm (4 inch) sieve, of a kind used in foundries.

The foundry coke products subject to this investigation are currently classifiable under subheading 2704.00.00.10 of the *Harmonized Tariff Schedules of the United States* (HTSUS). Although the HTSUS subheadings are provided for convenience and Customs purposes, our written description of the scope of this investigation is dispositive.

During our review of the petition, we discussed the scope with the petitioners to ensure that it accurately reflects the product for which the domestic industry is seeking relief. Moreover, as discussed in the preamble to the Department's regulations (62 FR 27323), we are setting aside a period for interested parties to raise issues regarding product coverage. The Department encourages all interested parties to submit such comments within 20 calender days of publication of this notice. Comments should be addressed to Import Administration's Central Records Unit at Room 1870, U.S. Department of Commerce, 14th Street and Constitution Avenue, NW., Washington, DC 20230. The period of scope consultations is intended to provide the Department with ample opportunity to consider all comments and consult with interested parties prior to the issuance of the preliminary determinations.

Determination of Industry Support for the Petition

Section 732(b)(1) of the Act requires that a petition be filed on behalf of the domestic industry. Section 732(c)(4)(A) of the Act provides that a petition meets this requirement if the domestic producers or workers who support the petition account for: (1) At least 25 percent of the total production of the domestic like product; and (2) more than 50 percent of the production of the domestic like product produced by that portion of the industry expressing support for, or opposition to, the petition.

Section 771(4)(A) of the Act defines the ''industry'' as the producers as a whole of a domestic like product. Thus, to determine whether the petition has the requisite industry support, the statute directs the Department to look to producers and workers who produce the domestic like product. The International Trade Commission (''ITC''), which is responsible for determining whether ''the domestic industry'' has been injured, must also determine what constitutes a domestic like product in order to define the industry. While the Department and the ITC must apply the same statutory definition regarding the domestic like product (*see* section 771(10) of the Act), they do so for different purposes and pursuant to separate and distinct authority. In addition, the Department's determination is subject to limitations of time and information. Although this may result in different definitions of the domestic like product, such differences do not render the decision of either agency contrary to law.[1]

Section 771(10) of the Act defines the domestic like product as ''a product which is like, or in the absence of like, most similar in characteristics and uses with, the article subject to an investigation under this title.'' Thus, the reference point from which the domestic like product analysis begins is ''the article subject to an investigation,'' *i.e.,* the class or kind of merchandise to be investigated, which normally will be the scope as defined in the petition.

In this case, the domestic like product referred to in the petition is the single domestic like product defined in the ''Scope of Investigation'' section, above. At this time, the Department has no basis on the record to find the petition's definition of the domestic like product to be inaccurate. The Department, therefore, has adopted the domestic like product definition set forth in the petition.

Moreover, the Department has determined that the petition contains adequate evidence of industry support; therefore, polling was not unnecessary (*see Initiation Checklist* Re: Industry Support, October 10, 2000) (''*Initiation Checklist*''). To the best of the Department's knowledge, producers supporting the petition represent over 50 percent of total production of the domestic like product. Additionally, no person who would qualify as an interested party pursuant to section 771(9) (A), (C), (D), (E), or (F) of the Act has expressed opposition to the petition.

Accordingly, the Department determines that this petition is filed on behalf of the domestic industry within the meaning of section 732(b)(1) of the Act.

Export Price and Normal Value

The following is a description of the allegation of sales at less than fair value upon which the Department based its decision to initiate this investigation. The sources of data for the deductions and adjustments relating to U.S. price and factors of production are also discussed in the *Initiation Checklist*. Should the need arise to use any of this information as facts available under section 776 of the Act in our preliminary or final determination, we may reexamine the information and revise the margin calculations, if appropriate.

Based on information obtained from the ITC's section 332 study on the foundry coke industries in the United States and the PRC, *Foundry Coke: A Review of the Industries in the United States and China*, July 2000 (''*332 Study*''), the petitioners identified the following PRC companies as major producers of foundry coke products in the PRC: Ying Xian, Top Reach (De-Rui), Ju Fu, Xiao Shan, Sanjia, Yuan Hui, Feng Yang Wen Feng, Ping Yao Feng Yang, Shuang Fa, Zhong Pu, Bai Zhang, Jin Yang, Military Farmland, Huang He, Jia Wei, Liangyu, Ping Yao Hua Feng, San Sheng, Tang Xin, Ying Xing, Wen Fei, Ying Dong, Fu You, Bao Wan, and Yao Long. Of these 25 companies the petitioners identified Ying Xian, Top Reach (De-Rui), Ju Fu, and Xiao Shan as the producers of a large quantity of foundry coke products exported to the United States.

The petitioners based export price (''EP'') on import values declared to the U.S. Customs Service. In calculating import values declared to the U.S. Customs Service, the petitioners used the HTSUS category under which subject merchandise is currently classified (*i.e,* 2704.00.00.10). The petitioners calculated one EP based on the average unit values for entries of subject merchandise during February and March 2000. In order to obtain ex-factory prices, the petitioners deducted foreign inland freight from the Customs value. According to the ITC's *332 study*

[1] *See Algoma Steel Corp. Ltd.,* v. *United States,* 688 F. Supp. 639, 642–44 (CIT 1988); High Information Content Flat Panel Displays and Display Glass from Japan: Final Determination; Rescission of Investigation and Partial Dismissal of Petition, 56 FR 32376, 32380–81 (July 16, 1991).

on the foundry coke industries in the United States and the PRC, in the PRC foundry coke is transported to the port by either truck or train. For purposes of calculating foreign inland freight, the petitioners used the surrogate value for rail because of the large distances involved and the lower expense of shipping by rail, as compared to shipments by truck. For purposes of initiation we have found that this is a conservative estimate. We relied on the data in the petition except for valuing foreign inland freight. *See Initiation Checklist.*

The petitioners assert that the Department considers the PRC to be a non-market economy country (''NME'') and, therefore, constructed normal value (''NV'') based on the factors of production methodology pursuant to section 773(c) of the Act. In previous cases, the Department has determined that the PRC is an NME country. *See, e.g., Final Determination of Sales at Less Than Fair Value: Certain Cold-Rolled Flat-Rolled Carbon-Quality Steel Products from the People's Republic of China* (''*Cold-Rolled Steel from China*''), 65 FR 34660 (May 31, 2000). In accordance with section 771(18)(c)(i) of the Act, the NME status remains in effect until revoked by the Department. The NME status of the PRC has not been revoked by the Department and, therefore, remains in effect for purposes of the initiation of this investigation. Accordingly, the NV of the product appropriately is based on factors of production valued in a surrogate market economy country in accordance with section 773(c) of the Act. In the course of this investigation, all parties will have the opportunity to provide relevant information related to the issues of the PRC's NME status and the granting of separate rates to individual exporters.

As required by 19 CFR 351.202(b)(7)(i)(C), the petitioners provided a dumping margin calculation using the Department's NME methodology described in 19 CFR 351.408. For the NV calculation, the petitioners based the factors of production, as defined by section 773(c)(3) of the Act (raw materials, labor, energy and capital cost), for foundry coke products on the quantities of inputs used by one of the petitioning firms, Citizens Gas & Coke. *See Initiation Checklist*

The petitioners selected India as their surrogate country. Citing the Department's recent determination in cold-rolled steel from the PRC, the petitioners stated that India is comparable to the PRC in its level of economic development and is a significant producer of foundry coke products. Based on the information provided by the petitioners, we believe that the petitioners' use of India as a surrogate country is appropriate for purposes of initiation of this investigation. *See Initiation Checklist.*

In accordance with section 773(c)(4) of the Act, the petitioners valued factors of production for foundry coke products, where possible, on reasonably available, public surrogate country data. To value coal (the sole raw material input), the petitioners used a value for coking coal as reported in the *Monthly Statistics of Foreign Trade of India,* Vol. II—Imports, Directorate General of Commercial Intelligence & Statistics, Ministry of Commerce, Government of India, Calcutta. Labor was valued using the regression-based wage rate for the PRC, in accordance with 19 CFR 351.408(c)(3). Energy (coke oven gas) was valued using an Indian surrogate value for natural gas, adjusted for the relative difference in heating values between natural gas and coke oven gas. For overhead, SG&A and profit, the petitioners applied rates derived from the publicly available annual report of an Indian producer of comparable merchandise, Tata Iron and Steel Co., Ltd.

Based on comparisons of EP to NV, calculated in accordance with section 773(c) of the Act, the estimated dumping margin for foundry coke products from the PRC is 226.38 percent.

Fair Value Comparisons

Based on the data provided by the petitioners, there is reason to believe that imports of foundry coke products from the PRC are being, or are likely to be, sold in the United States at less than fair value.

Allegations and Evidence of Material Injury and Causation

The petition alleges that the U.S. industry producing the domestic like product is being materially injured and is threatened with material injury, by reason of the imports of the subject merchandise sold at less than NV. The petitioners contend that the industry's injured condition is evident in the declining trends in: (1) U.S. market share, (2) domestic production, (3) shipments, (4) capacity utilization, (5) employment, and (6) profit margins.

The allegations of injury and causation are supported by relevant evidence including ITC section 332 import data, lost sales, and pricing information. The Department assessed the allegations and supporting evidence regarding material injury and causation and determined that these allegations are supported by accurate and adequate evidence and meet the statutory requirements for initiation (see Attachments to *Initiation Checklist,* Re: Material Injury).

Initiation of Antidumping Investigation

Based upon our examination of the petition on foundry coke imports from the PRC, we find that the petition meets the requirements of section 732 of the Act. Therefore, we are initiating an antidumping duty investigation to determine whether imports of foundry coke products from the PRC are being, or are likely to be, sold in the United States at less than fair value. Unless postponed, we will make our preliminary determination no later than 140 days after the date of this initiation.

Distribution of Copies of the Petition

In accordance with section 732(b)(3)(A) of the Act, a copy of the public version of the petition has been provided to the representatives of the PRC. We will attempt to provide a copy of the public version of the petition to each exporter named in the petition, as appropriate.

International Trade Commission Notification

We have notified the ITC of our initiation, as required by section 732(d) of the Act.

Preliminary Determination by the ITC

The ITC will preliminarily determine, no later than November 6, 2000, whether there is a reasonable indication that imports of foundry coke products from the PRC are causing material injury, or threatening to cause material injury, to a U.S. industry. A negative ITC determination will result in this investigation being terminated; otherwise, this investigation will proceed according to statutory and regulatory time limits.

This notice is published pursuant to section 777(i) of the Act.

Dated: October 10, 2000.

Troy H. Cribb,

Acting Assistant Secretary for Import Administration.

[FR Doc. 00–26654 Filed 10–16–00; 8:45 am]

BILLING CODE 3510–DS–P

DEPARTMENT OF COMMERCE

International Trade Administration

Office of Information Technologies; Meeting

AGENCY: International Trade Administration, Trade Development, Commerce.

ACTION: Notice of meeting and opportunity for collaboration.

SUMMARY: The Office of Information Technologies in the U.S. Department of Commerce's International Trade Administration will conduct a public meeting on Wednesday, November 8, 2000 at 9 a.m., in room 3407, Herbert C. Hoover Building, 14th and Constitution Avenue NW., Washington, DC 20230. The purpose of the meeting is to introduce to U.S. information technology (IT) suppliers the IT Management Planning Tool, a new product for developing IT markets overseas, and to explore ways to collaborate in disseminating this product to potential users. Seating is limited. Those planning on attending the meeting should inform the Office of Information Technologies by October 27, 2000.

FOR FURTHER INFORMATION CONTACT: Tu-Trang Phan or Raymond Cho in the Office of Information Technologies at 202–482–0571 (phone), 202–482–3002 (fax), or by e-mail at ExportIT@ita.doc.gov.

SUPPLEMENTARY INFORMATION: The Office of Information Technologies in the U.S. Department of Commerce's International Trade Administration will conduct a public meeting on Wednesday, November 8, 2000 at 9 a.m., in room 3407, Herbert C. Hoover Building, 14th and Constitution Avenue NW., Washington, DC 20230. The purpose of the meeting is to introduce to U.S. information technology (IT) suppliers a new approach to IT market development overseas and explore ways to collaborate in this effort. There will be a demonstration and discussion of the IT Management Planning Tool, which was created to serve as a market stimulator for U.S. suppliers to generate demand for their IT products and services overseas. The IT Tool is a software application which helps management of businesses and government agencies assess their current IT usage and plan for future IT investments that can improve their operations. Because the IT Tool is intended for overseas audiences, the contents of the Tool will be localized and translated into several languages, including Spanish, Portuguese, Russian, Simplified Chinese, and Traditional Chinese. U.S. information technology suppliers and service providers interested in partnering with the U.S. Department of Commerce in this unique overseas market development effort should attend the meeting.

The meeting is open to the public, however, seating in room 3407 is limited and is available on a first come, first served basis. Those planning on attending the meeting should inform the Office of Information Technologies by October 27, 2000. To request further information concerning the meeting or to request a copy of the Information Technology Planning Tool, contact Tu-Trang Phan or Raymond Cho in the Office of Information Technologies at 202–482–0571 by phone, 202–482–3002 by fax, or by e-mail at ExportIT@ita.doc.gov.

Dated: October 12, 2000.

John E. McPhee,

Director, Office of Information Technologies.

[FR Doc. 00–26659 Filed 10–16–00; 8:45 am]

BILLING CODE 3510–DR–P

DEPARTMENT OF COMMERCE

National Oceanic and Atmospheric Administration

[I.D. 091400A]

Marine Mammals

AGENCY: National Marine Fisheries Service (NMFS), National Oceanic and Atmospheric Administration (NOAA), Commerce.

ACTION: Issuance of photography permit no. 986-1592-00.

SUMMARY: Pandion Enterprises, P.O. Box 545, Summerland, California 93067, [Permit Holder: Bruce Reitherman], has been issued a permit to take by Level B harassment one species, elephant seal(Mirounga angustirostris), of non-threatened, non-endangered marine mammals for purposes of commercial photography.

ADDRESSES: The permit and related documents are available for review upon written request or by appointment in the following offices:

Permits Division, Office of Protected Resources, NMFS,1315 East-West Highway, Room 13130, Silver Spring, MD 20910 (301/713-2289); and

Regional Administrator, Southwest Region, NMFS, 501 West Ocean Boulevard, Long Beach, California 90802-4213, (562/980-4000).

SUPPLEMENTARY INFORMATION: On August 9, 2000, notice was published in the **Federal Register**(65 FR 48679) that the above-named applicant had submitted a request for a permit to take one species of marine mammals by Level B harassment during the course of commercial photographic activities in Piedras Blancas and Ano Nuevo, California. The requested permit has been issued, under the authority of §104(c)(6) of the Marine Mammal Protection Act of 1972, as amended (16 U.S.C. 1361 *et seq.*).

Dated: October 5, 2000.

Ann D. Terbush,

Chief, Permits and Documentation Division, Office of Protected Resources, National Marine Fisheries Service.

[FR Doc. 00–26655 Filed 10–16–00; 8:45 am]

BILLING CODE 3510–22–S

DEPARTMENT OF COMMERCE

United States Patent and Trademark Office

RIN 0651–AB25

Request for Comments on Preliminary Draft Convention on Jurisdiction and Foreign Judgments in Civil and Commercial Matters

AGENCY: United States Patent and Trademark Office, Commerce.

ACTION: Request for comments.

SUMMARY: The Hague Conference on Private International Law is negotiating a convention designed to create common jurisdiction rules for international civil and commercial cases and to provide for international recognition and enforcement of judgments issued under these rules. A Diplomatic Conference to conclude these negotiations is scheduled to begin in June 2001, with a final session sometime in early 2002. The United States Patent and Trademark Office (USPTO) is seeking views of the public on this effort and the consequent potential changes to United States law and practice.

DATES: Comments should be submitted on or before December 1, 2000.

ADDRESSES: Persons wishing to offer written comments should address those comments to Director of the United States Patent and Trademark Office, Box 4, United States Patent and Trademark Office, Washington, DC 20231, marked to the attention of Elizabeth Shaw. Comments may also be submitted by facsimile transmission to (703) 305–7575 or by electronic mail through the Internet to *elizabeth.shaw2@uspto.gov.* All comments will be maintained for public inspection in Room 902 of Crystal Park II, 2121 Crystal Drive, Arlington, Virginia.

FOR FURTHER INFORMATION CONTACT: Jennifer Lucas by telephone at (703) 305–9300; by facsimile at (703) 305–8885; by electronic mail to jennifer.lucas@uspto.gov; or by mail marked to the attention of Jennifer Lucas, Attorney-Advisor, addressed to Director of the United States Patent and

Trademark Office, Box 4, Washington, DC 20231.

SUPPLEMENTARY INFORMATION:

Background

The Hague Conference on Private International Law is in the process of negotiating a new convention on jurisdiction and the recognition and enforcement of foreign judgments in civil and commercial matters. The draft convention would create jurisdictional rules governing international lawsuits and provide for recognition and enforcement of judgments by the courts of Member States. Member States would be required to recognize and enforce judgments covered by the Convention if the jurisdiction in the court rendering the judgment were founded on one of the bases of jurisdiction required by the Convention.

Discussions began in 1992, at the request of the United States. The impetus behind the request was to gain recognition and enforcement of U.S. judgments in other countries. While U.S. courts generally recognize and enforce judgments from other countries, U.S. judgments do not always receive the same treatment abroad.

The Hague Conference is planning a two-part Diplomatic Conference to finalize the draft convention. The first session would take place in June 2001, followed by a second session in late 2001 or early 2002.

The text of the proposed convention and other documents relating to the proposal are available via the Hague Conference's web site at *http://www.hcch.net/e/workprog/jdgm.html.*

Brief Summary of Draft Convention

The draft convention would create three categories of jurisdiction: (1) required bases for jurisdiction (generally Articles 3–16); (2) prohibited bases for jurisdiction (Article 18); and (3) everything else not covered by (1) or (2) (Article 17).

Articles 3–16 set out jurisdictional rules for specific types of actions that the courts in Contracting States must provide, and from which any resulting judgment may gain the benefits of the recognition and enforcement provisions of the Convention.

Article 12 creates exclusive jurisdiction for certain actions that ''have as their object'' the registration, validity, nullity, and possibly revocation or infringement of patents, trademarks, or other similar rights required to be deposited or registered, in the courts of the country in which the deposit or registration has been applied for or has occurred. Copyrights are excluded from the exclusive jurisdiction rule; however, actions concerning copyrights could fall under the other non-exclusive required jurisdictional provisions.

Specifically, Article 12 provides:

''4. In proceedings which have as their object the registration, validity, [or] nullity [, or revocation or infringement] of patents, trade marks, designs or other similar rights required to be deposited or registered, the courts of the Contracting State in which the deposit or registration has been applied for, has taken place or, under the terms of an international convention, is deemed to have taken place, have exclusive jurisdiction. This shall not apply to copyright or any neighboring rights, even though registration or deposit of such rights is possible.

[5. In relation to proceedings which have as their object the infringement of patents, the preceding paragraph does not exclude the jurisdiction of any other court under the Convention or under the national law of a Contracting State.]

[6. The previous paragraphs shall not apply when the matters referred to therein arise as incidental questions.]''

The brackets identify potential language alternatives to be considered and discussed in detail during the Diplomatic Conference.

Article 4 provides that parties may enter into agreements designating a choice of court; however, such agreements shall be without effect if they conflict with the provisions of Article 12. In addition, Article 5, which confers jurisdiction on a court when the defendant proceeds on the merits without contesting jurisdiction, is subject to Article 12 as well.

Article 10 defines jurisdictional rules for tort actions. This provision would cover copyright infringement proceedings. It also could apply to patent and trademark infringement proceedings if the bracketed language in Article 12(4) is not approved. Article 10 provides for jurisdiction either in the State in which the act or omission causing injury occurred, or the State in which the injury arose so long as the injury in that State was reasonably foreseeable. Article 10(4) would limit available damages, where jurisdiction is founded on the place of injury, to the damage suffered in the place the suit is filed unless that is also the plaintiff's habitual residence.

Article 18 defines grounds of jurisdiction that are prohibited in Contracting States. Article 18(1) would place a general limitation on the exercise of jurisdiction based on the absence of a ''substantial connection between that State and the dispute.'' Article 18(2)(e) is of particular interest to U.S. litigants because it states that jurisdiction cannot be based solely on the fact that the defendant carries on commercial or other activities in that State, except where the dispute is directly related to those activities. This provision would prohibit the exercise of general ''doing business'' jurisdiction as currently recognized under U.S. law. Article 18(2) also would prohibit the exercise of ''tag'' jurisdiction in a court based on service upon the defendant in the State.

Everything that does not fall under either of these categories is included in the ''gray area'' as defined in Article 17. With some exceptions, countries can continue to act as they normally do under their national law; however, judgments resulting from actions covered by this provision will not get the benefits of recognition and enforcement under the Convention.

Chapter III provides rules for the recognition and enforcement of judgments based on a ground of jurisdiction provided for in Articles 3–16.

Current U.S. Jurisdictional Law

U.S. courts must have both personal jurisdiction over the parties and subject matter jurisdiction over the case before a court can act on a dispute.

I. Personal Jurisdiction

Generally, in order to exercise personal jurisdiction over a nonresident defendant, district courts interpret the long-arm statute of the state in which they reside, as restricted by the limitations imposed by the due process clause of the U.S. Constitution.

Courts first apply the state long-arm statute, which defines what types of conduct would bring a nonresident defendant within the boundaries of the court's reach. Activities that can create jurisdiction under most long-arm statutes include transacting business, committing a tortious act within the forum, or committing a tortious act outside the forum that has an effect within the forum.

Once the court finds that the exercise of jurisdiction over the nonresident defendant is consistent with the relevant long-arm statute, the court then must determine whether the due process requirements are satisfied. The due process rule of the U.S. Constitution requires that a nonresident defendant have ''minimum contacts with [the forum] such that the maintenance of the suit does not offend 'traditional notions of fair play and substantial justice.' '' *International Shoe Co.* v. *Washington,* 326 U.S. 310, 316 (1945) (quoting *Milliken* v. *Meyer,* 311 U.S. 457, 463 (1940)). In evaluating whether minimum contacts have been established in a given case, the courts ask if a

nonresident defendant, through his conduct and connection with the forum, ''purposefully avails itself of the privilege of conducting activities within the forum state, thus invoking the benefits and protections of its laws.'' *Burger King Corp.* v. *Rudzewicz,* 471 U.S. 462, 475 (1985) (quoting *Hanson* v. *Denckla,* 357 U.S. 235, 253 (1958)).

A court must establish that it has either general or specific jurisdiction over a defendant before it can proceed with an action against the defendant. General jurisdiction is personal jurisdiction exercised over a defendant when the cause of action is unrelated to the defendant's contacts, but the defendant has sufficient contacts with the forum. Specific jurisdiction arises out of, or is related to, the defendant's contacts with the forum. *See Helicopteros Nacionales de Colombia* v. *Hall*, 466 U.S. 408, 414 (1984).

General jurisdiction has been found where the defendant was engaging in ''continuous and systematic [though unrelated to the cause of action] business.'' *Perkins* v. *Benguet Consolidated Mining Co.*, 342 U.S. 437, 438 (1952). To assert specific jurisdiction, a court is required to find that the defendant purposefully directed activities at residents in the forum, the claim arose out of those activities, and the assertion of personal jurisdiction is fair and reasonable. *See Burger King,* 471 U.S. at 471–76.

Courts are cautious in exercise of jurisdiction over foreign defendants. *See Asahi Metal Industry Co.* v. *Superior Court,* 480 U.S. 102, 114 (1987) (holding ''unique burdens placed upon one who must defend oneself in a foreign legal system should have significant weight in assessing the reasonableness of stretching the long arm of personal jurisdiction over national borders.''). Considered critical to due process analysis is whether the foreseeability exhibited by defendant's conduct and its connections with the forum State demonstrate that the defendant would reasonably anticipate being brought into the forum court. *See World-Wide Volkswagen Corp.* v. *Woodson,* 444 U.S. 286, 297–298 (1980).

With respect to Internet-related cases, the law of personal jurisdiction is in flux. The traditional minimum contacts approach has been used to determine whether a court has jurisdiction over a non-resident defendant in Internet-related intellectual property disputes. In such cases, the courts have looked to a variety of factors, including but not limited to the level of interactivity of the Web site; whether the tortious act was committed in state or out-of-state with impact in the state; the number of hits on the Web site; or the foreseeability of use by forum residents. *See, e.g., Cybersell, Inc.* v. *Cybersell, Inc.,* 130 F.3d 414 (9th Cir. 1997); *Zippo Mfg. Co.* v. *Zippo Dot Com,* 952 F. Supp. 1119 (W.D. Pa. 1997); *Eskofot A/S* v. *E.I. Du Pont De Nemours & Co.,* 872 F. Supp. 81 (S.D.N.Y. 1995).

II. Subject Matter Jurisdiction

Federal district courts have jurisdiction over civil actions involving patents, trademarks and copyrights pursuant to 28 U.S.C. 1338(a), which provides: ''The district courts shall have original jurisdiction of any civil action arising under any Act of Congress relating to patents, * * * copyrights and trademarks. Such jurisdiction shall be exclusive of the courts of the states in patent * * * and copyright cases.''

A. Patents

As mentioned above, federal courts have exclusive jurisdiction over all suits ''arising under any Act of Congress relating to patents.'' This includes all patent validity and infringement actions. Jurisdiction under this section extends ''only to those cases in which a well-pleaded complaint establishes either that federal patent law creates the cause of action or that the plaintiff's right to relief necessarily depends on resolution of a substantial question of federal patent law.'' *Christianson* v. *Colt Industries Operating Corp.,* 486 U.S. 800, 809 (1988).

B. Trademarks

Actions involving trademark infringement under the Lanham Act can be heard in either state or federal courts in the United States. However, most trademark actions arising out of the Lanham Act take place in federal court. Federal district courts have subject matter jurisdiction over all actions arising under the Lanham Act pursuant to § 39 of that Act, 15 U.S.C. 1121, as well as 28 U.S.C. 1338(a).

Section 14 of the Lanham Act creates an administrative proceeding within the USPTO where a party can petition to cancel a registered trademark. 15 U.S.C. 1064. Federal courts have concurrent jurisdiction with the USPTO to hear proceedings to cancel a mark, so long as the challenge arises from an existing trademark-related proceeding, as a result of § 37 of the Lanham Act. 15 U.S.C. 1119. Section 37 provides that a court may order the cancellation of a trademark registration ''[i]n any action involving a registered trademark.'' This section, however, does not create an independent ground for exercising jurisdiction over an action—the court must have subject matter jurisdiction based on another ground before considering cancellation of a registered trademark. *See* 5 J. Thomas McCarthy, *McCarthy on Trademarks and Unfair Competition,* § 30:110, pp. 30–186–88 (4th ed. 2000).

C. Copyrights

Federal courts have exclusive jurisdiction over actions based on the Copyright Act, including copyright infringement proceedings. 28 U.S.C. 1338(a).

Issues for Public Comment

The USPTO is interested in assessing support for or opposition to the effort to negotiate a convention on jurisdiction and enforcement of judgments and in obtaining comments on the proposed convention as it relates to intellectual property. Interested members of the public are invited to present written comments on any issues they believe to be relevant to protection of intellectual property or any aspect of the proposed convention as it relates to intellectual property. Comments also are welcome on the following specific issues:

1. What are your experiences in having judgments involving intellectual property from one jurisdiction recognized in a foreign court?
2. Have you had different experiences in having those judgments recognized in U.S. courts?
3. Are uniform rules for international enforcement of judgments desirable?
4. Do you support or oppose the United States becoming party to a jurisdiction/enforcement of judgments convention?
5. What would be the benefits or drawbacks of the United States becoming a party to the proposed Hague convention?
6. Would the elimination of tag or general ''doing business'' jurisdiction have any impact on intellectual property owners' ability to protect their rights either domestically or internationally?
7. What other changes to U.S. law would be needed to implement the proposed convention? Please identify any drawbacks and/or advantages to such changes.
8. What effect, if any, could this Convention have on other international intellectual property obligations, including, but not limited to, the Agreement on Trade-Related Aspects of Intellectual Property Rights (TRIPS), the Paris Convention, and the Berne Convention?
9. What effect, if any, could this Convention have on the enforcement of intellectual property with respect to the Internet?

10. Would application of Article 10 change existing jurisdictional principles as applied to intellectual property infringement actions? If yes, please describe any changes in detail and provide any relevant legal authority.

11. Would the limitation of worldwide damages in Article 10(4) have any significant impact in cases involving worldwide infringement of trademark or other intellectual property rights?

12. With respect to Article 12(4), under what circumstances would application of this subsection change existing jurisdictional principles, with and without the bracketed language included? Please describe any changes in detail and provide any relevant legal authority.

13. What effect, if any, would Article 12(4) have on trademark owners seeking to litigate rights related to registered versus common law marks?

14. Is exclusive jurisdiction needed for infringement and/or validity actions involving patents, trademarks, and/or copyrights?

15. What changes, if any, should be made to the proposed Convention? Please describe any changes in detail and provide any relevant legal authorities that support such suggestions.

16. Please identify any other potential concerns or advantages raised by the proposed convention.

In your response, please include the following: (1) clearly identify the matter being addressed; (2) provide examples, where appropriate, of the matter being addressed; (3) identify any relevant legal authorities applicable to the matter being addressed; and (4) provide suggestions regarding how the matter should be addressed by the United States.

Dated: October 11, 2000.

Q. Todd Dickinson,

Under Secretary of Commerce for Intellectual Property and Director of the United States Patent and Trademark Office.

[FR Doc. 00–26634 Filed 10–16–00; 8:45 am]

BILLING CODE 3510–16–P

COMMITTEE FOR THE IMPLEMENTATION OF TEXTILE AGREEMENTS

Announcement of Import Restraint Limits for Certain Cotton, Wool, Man-Made Fiber, Silk Blend and Other Vegetable Fiber Textile Products Produced or Manufactured in Bahrain

October 11, 2000.

AGENCY: Committee for the Implementation of Textile Agreements (CITA).

ACTION: Issuing a directive to the Commissioner of Customs establishing limits.

EFFECTIVE DATE: January 1, 2001.

FOR FURTHER INFORMATION CONTACT: Roy Unger, International Trade Specialist, Office of Textiles and Apparel, U.S. Department of Commerce, (202) 482–4212. For information on the quota status of these limits, refer to the Quota Status Reports posted on the bulletin boards of each Customs port, call (202) 927–5850, or refer to the U.S. Customs website at http://www.customs.ustreas.gov. For information on embargoes and quota re-openings, call (202) 482–3715.

SUPPLEMENTARY INFORMATION:

Authority: Section 204 of the Agricultural Act of 1956, as amended (7 U.S.C. 1854); Executive Order 11651 of March 3, 1972, as amended.

The import restraint limits for textile products, produced or manufactured in Bahrain and exported during the period January 1, 2001 through December 31, 2001 are based on limits notified to the Textiles Monitoring Body pursuant to the Uruguay Round Agreement on Textiles and Clothing (ATC).

In the letter published below, the Chairman of CITA directs the Commissioner of Customs to establish the limits for the 2001 period.

A description of the textile and apparel categories in terms of HTS numbers is available in the CORRELATION: Textile and Apparel Categories with the Harmonized Tariff Schedule of the United States (see **Federal Register** notice 64 FR 71982, published on December 22, 1999). Information regarding the 2001 CORRELATION will be published in the **Federal Register** at a later date.

Richard B. Steinkamp,

Acting Chairman, Committee for the Implementation of Textile Agreements.

Committee for the Implementation of Textile Agreements

October 11, 2000.

Commissioner of Customs,

Department of the Treasury, Washington, DC 20229.

Dear Commissioner: Pursuant to section 204 of the Agricultural Act of 1956, as amended (7 U.S.C. 1854); Executive Order 11651 of March 3, 1972, as amended; and the Uruguay Round Agreement on Textiles and Clothing (ATC), you are directed to prohibit, effective on January 1, 2001, entry into the United States for consumption and withdrawal from warehouse for consumption of cotton, wool, man-made fiber, silk blend and other vegetable fiber textile products in the following categories, produced or manufactured in Bahrain and exported during the twelve-month period beginning on January 1, 2001 and extending through December 31, 2001, in excess of the following levels of restraint:

Category	Twelve-month restraint limit
Group I 237, 239pt. [1], 331–336, 338, 339, 340–342, 345, 347, 348, 350–352, 359pt. [2], 431, 433–436, 438, 440, 442–448, 459pt. [3], 631, 633–636, 638, 639, 640–647, 648, 649, 650–652, 659pt. [4], 831, 833–836, 838, 840, 842–847, 850–852, 858 and 859pt. [5], as a group.	56,846,705 square meters equivalent.
Sublevels in Group I	
338/339	789,896 dozen.
340/640	378,978 dozen of which not more than 284,233 dozen shall be in Categories 340–Y/640–Y [6].

[1] Category 239pt.: only HTS number 6209.20.5040 (diapers).

[2] Category 359pt.: all HTS numbers except 6406.99.1550.

[3] Category 459pt.: all HTS numbers except 6405.20.6030, 6405.20.6060, 6405.20.6090, 6406.99.1505 and 6406.99.1560.

[4] Category 659pt.: all HTS numbers except 6406.99.1510 and 6406.99.1540.

[5] Category 859pt.: only HTS numbers 6115.19.8040, 6117.10.6020, 6212.10.5030, 6212.10.9040, 6212.20.0030, 6212.30.0030, 6212.90.0090, 6214.10.2000 and 6214.90.0090.

[6] Category 340–Y: only HTS numbers 6205.20.2015, 6205.20.2020, 6205.20.2046, 6205.20.2050 and 6205.20.2060; Category 640–Y: only HTS numbers 6205.30.2010, 6205.30.2020, 6205.30.2050 and 6205.30.2060.

The limits set forth above are subject to adjustment pursuant to the provisions of the ATC and administrative arrangements notified to the Textiles Monitoring Body.

Products in the above categories exported during 2000 shall be charged to the applicable category limits for that year (see directive dated December 10, 1999) to the extent of any unfilled balances. In the event the limits established for that period have been exhausted by previous entries, such products shall be charged to the limits set forth in this directive.

In carrying out the above directions, the Commissioner of Customs should construe entry into the United States for consumption to include entry for consumption into the Commonwealth of Puerto Rico.

The Committee for the Implementation of Textile Agreements has determined that these actions fall within the foreign affairs exception to the rulemaking provisions of 5 U.S.C. 553(a)(1).

Sincerely,

Richard B. Steinkamp,

Acting Chairman, Committee for the Implementation of Textile Agreements.

[FR Doc. 00–26608 Filed 10–16–00; 8:45 am]

BILLING CODE 3510–DR–F

COMMITTEE FOR THE IMPLEMENTATION OF TEXTILE AGREEMENTS

Adjustment of Import Limits for Certain Cotton, Wool, Man-Made Fiber, Silk Blend and Other Vegetable Fiber Textiles and Textile Products Produced or Manufactured in the Republic of Korea

October 11, 2000.

AGENCY: Committee for the Implementation of Textile Agreements (CITA).

ACTION: Issuing a directive to the Commissioner of Customs adjusting limits.

EFFECTIVE DATE: October 17, 2000.

FOR FURTHER INFORMATION CONTACT: Ross Arnold, International Trade Specialist, Office of Textiles and Apparel, U.S. Department of Commerce, (202) 482–4212. For information on the quota status of these limits, refer to the Quota Status Reports posted on the bulletin boards of each Customs port, call (202) 927–5850, or refer to the U.S. Customs website at http://www.customs.gov. For information on embargoes and quota re-openings, call (202) 482–3715.

SUPPLEMENTARY INFORMATION:

Authority: Section 204 of the Agricultural Act of 1956, as amended (7 U.S.C. 1854); Executive Order 11651 of March 3, 1972, as amended.

The current limits for certain categories are being adjusted, variously, for swing, carryover, carryforward, carryforward used and special shift.

A description of the textile and apparel categories in terms of HTS numbers is available in the CORRELATION: Textile and Apparel Categories with the Harmonized Tariff Schedule of the United States (see **Federal Register** notice 64 FR 71982, published on December 22, 1999). Also see 64 FR 68334, published on December 7, 1999.

Richard B. Steinkamp,

Acting Chairman, Committee for the Implementation of Textile Agreements.

Committee for the Implementation of Textile Agreements

October 11, 2000.

Commissioner of Customs,
Department of the Treasury, Washington, DC 20229.

Dear Commissioner: This directive amends, but does not cancel, the directive issued to you on December 1, 1999, by the Chairman, Committee for the Implementation of Textile Agreements. That directive concerns imports of certain cotton, wool, man-made fiber, silk blend and other vegetable fiber textiles and textile products, produced or manufactured in Korea and exported during the period which began on January 1, 2000 and extends through December 31, 2000.

Effective on October 17, 2000, you are directed to adjust the limits for the following categories, as provided for under the Uruguay Round Agreement on Textiles and Clothing:

Category	Adjusted limit [1]
Group I	
200–223, 224–V [2], 224–O [3], 225–227, 300–326, 360–363, 369pt. [4], 400–414, 464, 469pt. [5], 600–629, 666, 669–P [6], 669pt. [7] and 670–O [8], as a group.	420,482,425 square meters equivalent.
Group II	
237, 239pt. [9], 331–348, 350–352, 359–H [10], 359pt. [11], 431, 433–438, 440–448, 459–W [12], 459pt. [13], 631, 633–652, 659–H [14], 659–S [15] and 659pt. [16], as a group.	600,653,070 square meters equivalent.
Sublevels within Group II	
333/334/335	325,193 dozen of which not more than 166,211 dozen shall be in Category 335.
336	68,922 dozen.
338/339	1,430,197 dozen.
340	798,508 dozen of which not more than 422,170 dozen shall be in Category 340–D [17].
341	189,050 dozen.
342/642	263,796 dozen.
345	141,709 dozen.
347/348	575,581 dozen.
350	20,172 dozen.
351/651	277,125 dozen.
352	215,097 dozen.
433	15,127 dozen.
434	7,759 dozen.
435	39,522 dozen.
436	16,729 dozen.
438	65,847 dozen.
442	56,539 dozen.
443	344,600 numbers.
444	60,480 numbers.
445/446	56,751 dozen.
447	95,012 dozen.
448	39,776 dozen.
459–W	107,596 kilograms.
631	364,124 dozen pairs.
633/634/635	1,425,286 dozen of which not more than 161,624 dozen shall be in Category 633 and not more than 602,324 dozen shall be in Category 635.
636	309,393 dozen.
638/639	5,456,769 dozen.
640–D [18]	3,002,692 dozen.
640–O [19]	2,837,492 dozen.
641	1,164,074 dozen of which not more than 49,403 dozen shall be in Category 641–Y [20].
647/648	1,421,191 dozen.
650	29,520 dozen.
659–H	1,497,317 kilograms.
659–S	217,092 kilograms.
Group III	
831, 833–838, 840–844, 847–858 and 859pt. [21], as a group.	17,653,944 square meters equivalent.
Sublevel within Group III	
835	31,846 dozen.
Group VI	
369–L/670–L/870 [22], as a group.	70,506,099 square meters equivalent.

[1] The limits have not been adjusted to account for any imports exported after December 31, 1999.

[2] Category 224–V: only HTS numbers 5801.21.0000, 5801.23.0000, 5801.24.0000, 5801.25.0010, 5801.25.0020, 5801.26.0010, 5801.26.0020, 5801.31.0000, 5801.33.0000, 5801.34.0000, 5801.35.0010, 5801.35.0020, 5801.36.0010 and 5801.36,0020.

[3] Category 224–O: all remaining HTS numbers in Category 224.

[4] Category 369pt.: all HTS numbers except 4202.12.4000, 4202.12.8020, 4202.12.8060, 4202.92.1500, 4202.92.3016, 4202.92.6091, 6307.90.9905, (Category 369–L); 5601.10.1000, 5601.21.0090, 5701.90.1020, 5701.90.2020, 5702.10.9020, 5702.39.2010, 5702.49.1020, 5702.49.1080, 5702.59.1000, 5702.99.1010, 5702.99.1090, 5705.00.2020 and 6406.10.7700.

[5] Category 469pt.: all HTS numbers except 5601.29.0020, 5603.94.1010 and 6406.10.9020.

[6] Category 669–P: only HTS numbers 6305.32.0010, 6305.32.0020, 6305.33.0010, 6305.33.0020 and 6305.39.0000.

[7] Category 669pt.: all HTS numbers except 6305.32.0010, 6305.32.0020, 6305.33.0010, 6305.33.0020, 6305.39.0000 (Category 669–P); 5601.10.2000, 5601.22.0090, 5607.49.3000, 5607.50.4000 and 6406.10.9040.

[8] Category 670–O: All HTS numbers except only HTS numbers 4202.12.8030, 4202.12.8070, 4202.92.3020, 4202.92.3031, 4202.92.9026 and 6307.90.9907 (Category 670–L).

[9] Category 239pt.: only HTS number 6209.20.5040 (diapers).

[10] Category 359–H: only HTS numbers 6505.90.1540 and 6505.90.2060.

[11] Category 359pt.: all HTS numbers except 6505.90.1540, 6505.20.2060 (Category 359–H); and 6406.99.1550.

[12] Category 459–W: only HTS number 6505.90.4090.

[13] Category 459pt.: all HTS numbers except 6505.90.4090 (Category 459–W); 6405.20.6030, 6405.20.6060, 6405.20.6090, 6406.99.1505 and 6406.99.1560.

[14] Category 659–H: only HTS numbers 6502.00.9030, 6504.00.9015, 6504.00.9060, 6505.90.5090, 6505.90.6090, 6505.90.7090 and 6505.90.8090.

[15] Category 659–S: only HTS numbers 6112.31.0010, 6112.31.0020, 6112.41.0010, 6112.41.0020, 6112.41.0030, 6112.41.0040, 6211.11.1010, 6211.11.1020, 6211.12.1010 and 6211.12.1020.

[16] Category 659pt.: all HTS numbers except 6502.00.9030, 6504.00.9015, 6504.00.9060, 6505.90.5090, 6505.90.6090, 6505.90.7090, 6505.90.8090 (Category 659–H); 6112.31.0010, 6112.31.0020, 6112.41.0010, 6112.41.0020, 6112.41.0030, 6112.41.0040, 6211.11.1010, 6211.11.1020, 6211.12.1010, 6211.12.1020 (Category 659–S); 6406.99.1510 and 6406.99.1540.

[17] Category 340–D: only HTS numbers 6205.20.2015, 6205.20.2020, 6205.20.2025 and 6205.20.2030.

[18] Category 640–D: only HTS numbers 6205.30.2010, 6205.30.2020, 6205.30.2030, 6205.30.2040, 6205.90.3030 and 6205.90.4030.

[19] Category 640–O: only HTS numbers 6203.23.0080, 6203.29.2050, 6205.30.1000, 6205.30.2050, 6205.30.2060, 6205.30.2070, 6205.30.2080 and 6211.33.0040.

[20] Category 641–Y: only HTS numbers 6204.23.0050, 6204.29.2030, 6206.40.3010 and 6206.40.3025.

[21] Category 859pt.: only HTS numbers 6115.19.8040, 6117.10.6020, 6212.10.5030, 6212.10.9040, 6212.20.0030, 6212.30.0030, 6212.90.0090, 6214.10.2000 and 6214.90.0090.

[22] Category 870; Category 369–L: only HTS numbers 4202.12.4000, 4202.12.8020, 4202.12.8060, 4202.92.1500, 4202.92.3016, 4202.92.6091 and 6307.90.9905; Category 670–L: only HTS numbers 4202.12.8030, 4202.12.8070, 4202.92.3020, 4202.92.3031, 4202.92.9026 and 6307.90.9907.

The Committee for the Implementation of Textile Agreements has determined that these actions fall within the foreign affairs exception of the rulemaking provisions of 5 U.S.C. 553(a)(1).

Sincerely,

Richard B. Steinkamp,

Acting Chairman, Committee for the Implementation of Textile Agreements.

[FR Doc. 00–26609 Filed 10–16–00; 8:45 am]

BILLING CODE 3510–DR–F

COMMITTEE FOR THE IMPLEMENTATION OF TEXTILE AGREEMENTS

Adjustment of an Import Limit for Certain Wool Textile Products Produced or Manufactured in Romania

October 11, 2000.

AGENCY: Committee for the Implementation of Textile Agreements (CITA).

ACTION: Issuing a directive to the Commissioner of Customs increasing a limit.

EFFECTIVE DATE: October 17, 2000.

FOR FURTHER INFORMATION CONTACT: Naomi Freeman, International Trade Specialist, Office of Textiles and Apparel, U.S. Department of Commerce, (202) 482–4212. For information on the quota status of this limit, refer to the Quota Status Reports posted on the bulletin boards of each Customs port, call (202) 927–5850, or refer to the U.S. Customs website at http://www.customs.gov. For information on embargoes and quota re-openings, call (202) 482–3715.

SUPPLEMENTARY INFORMATION:

Authority: Section 204 of the Agricultural Act of 1956, as amended (7 U.S.C. 1854); Executive Order 11651 of March 3, 1972, as amended.

The current limit for Category 435 is being increased for carryforward.

A description of the textile and apparel categories in terms of HTS numbers is available in the CORRELATION: Textile and Apparel Categories with the Harmonized Tariff Schedule of the United States (see **Federal Register** notice 64 FR 71982, published on December 22, 1999). Also see 64 FR 71116, published on December 20, 1999.

Richard B. Steinkamp,

Acting Chairman, Committee for the Implementation of Textile Agreements.

Committee for the Implementation of Textile Agreements

October 11, 2000.

Commissioner of Customs,
Department of the Treasury, Washington, DC 20229.

Dear Commissioner: This directive amends, but does not cancel, the directive issued to you on December 14, 1999, by the Chairman, Committee for the Implementation of Textile Agreements. That directive concerns imports of certain cotton, wool, man-made fiber, silk blend and other vegetable fiber textiles and textile products, produced or manufactured in Romania and exported during the twelve-month period beginning on January 1, 2000 and extending through December 31, 2000.

Effective on October 17, 2000, you are directed to increase the current limit for Category 435 to 15,232 dozen,[1] as provided for under the Uruguay Round Agreement on Textiles and Clothing:

The Committee for the Implementation of Textile Agreements has determined that this action falls within the foreign affairs exception of the rulemaking provisions of 5 U.S.C. 553(a)(1).

Sincerely,

Richard B. Steinkamp,

Acting Chairman, Committee for the Implementation of Textile Agreements.

[FR Doc. 00–26610 Filed 10–16–00; 8:45 am]

BILLING CODE 3510–DR–F

COMMITTEE FOR THE IMPLEMENTATION OF TEXTILE AGREEMENTS

Adjustment of Import Restraint Limits for Certain Cotton, Wool and Man-Made Fiber Textile Products Produced or Manufactured in Thailand

October 11, 2000.

AGENCY: Committee for the Implementation of Textile Agreements (CITA).

ACTION: Issuing a directive to the Commissioner of Customs adjusting limits.

EFFECTIVE DATE: October 17, 2000.

FOR FURTHER INFORMATION CONTACT: Ross Arnold, International Trade Specialist, Office of Textiles and Apparel, U.S. Department of Commerce, (202) 482–4212. For information on the quota status of these limits, refer to the Quota Status Reports posted on the bulletin boards of each Customs port, call (202)

[1] The limit has not been adjusted to account for any imports exported after December 31, 1999.

927–5850, or refer to the U.S. Customs website at http://www.customs.gov. For information on embargoes and quota re-openings, call (202) 482–3715.

SUPPLEMENTARY INFORMATION:

Authority: Section 204 of the Agricultural Act of 1956, as amended (7 U.S.C. 1854); Executive Order 11651 of March 3, 1972, as amended.

The current limits for certain categories are being adjusted, variously for carryforward used, swing, carryover and carryforward.

A description of the textile and apparel categories in terms of HTS numbers is available in the CORRELATION: Textile and Apparel Categories with the Harmonized Tariff Schedule of the United States (see **Federal Register** notice 64 FR 71982, published on December 22, 1999). Also see 64 FR 68336, published on December 7, 1999.

Richard B. Steinkamp,

Acting Chairman, Committee for the Implementation of Textile Agreements.

Committee for the Implementation of Textile Agreements

October 11, 2000.

Commissioner of Customs,

Department of the Treasury, Washington, DC 20229.

Dear Commissioner: This directive amends, but does not cancel, the directive issued to you on December 1, 1999, by the Chairman, Committee for the Implementation of Textile Agreements. That directive concerns imports of certain cotton, wool, man-made fiber, silk blend and other vegetable fiber textiles and textile products, produced or manufactured in Thailand and exported during the period which began on January 1, 2000 and extends through December 31, 2000.

Effective on October 17, 2000, you are directed to adjust the limits for the following categories, as provided for under the Uruguay Round Agreement on Textiles and Clothing:

Category	Adjusted twelve-month limit [1]
Sublevels in Group II	
338/339	2,388,501 dozen.
340	365,813 dozen.
342/642	817,249 dozen.
345	401,886 dozen.
351/651	317,277 dozen.
438	20,397 dozen.
638/639	2,502,116 dozen.
647/648	1,468,242 dozen.

[1] The limits have not been adjusted to account for any imports exported after December 31, 1999.

The Committee for the Implementation of Textile Agreements has determined that these actions fall within the foreign affairs exception to the rulemaking provisions of 5 U.S.C. 553(a)(1).

Sincerely,

Richard B. Steinkamp,

Acting Chairman, Committee for the Implementation of Textile Agreements.

[FR Doc. 00–26611 Filed 10–16–00; 8:45 am]

BILLING CODE 3510–DR–F

CONSUMER PRODUCT SAFETY COMMISSION

Sunshine Act Meeting

AGENCY: Consumer Product Safety Commission.

TIME AND DATE: Wednesday, October 25, 2000, 2:00 p.m.

LOCATION: Room 410, East West Towers, 4330 East West Highway, Bethesda, Maryland.

STATUS: Closed to the Public.

MATTER TO BE CONSIDERED:

COMPLIANCE STATUS REPORT: The staff will brief the Commission on the status of various compliance matters. For a recorded message containing the latest agenda information, call (301) 504–0709.

CONTACT PERSON FOR ADDITIONAL INFORMATION: Sayde E. Dunn, Office of the Secretary, 4330 East West Highway, Bethesda, MD 20207 (301) 504–0800.

Dated: October 12, 2000.

Sayde E. Dunn,

Secretary.

[FR Doc. 00–26782 Filed 10–13–00; 3:03 pm]

BILLING CODE 6355–01–M

DEPARTMENT OF DEFENSE

Office of the Secretary

Submission for OMB Review; Comment Request

ACTION: Notice.

The Department of Defense has submitted to OMB for clearance, the following proposal for collection of information under the provisions of the Paperwork Reduction act (44 U.S.C. Chapter 35).

Title, Form Number, and OMB Number: Shipper's Export Declaration (SED) Program; ENG Form 7513; OMB Number 0710–[To be Determined].

Type of Request: New Collection.

Number of Respondents: 13,000.

Responses Per Respondent: 12.

Annual Responses: 164,367.

Average Burden Per Response: 11 minutes.

Annual Burden Hours: 29,737.

Needs and Uses: The data collected are movements of foreign cargo from one foreign country to another foreign country through a U.S. water port. Since goods are neither produced nor consumed in the U.S., they do not count in the balance of trade statistics, but are important from a water transportation standpoint. Vessels moving these goods are federally maintained channels, and these goods should be included in federal water transportation in multi-modal transportation analysis. The Army Corps of Engineers and Maritime Administration (MARAD) use the data from the program to satisfy the missions of their respective agencies. The Corps is responsible for the operation and maintenance of the nation's waterway system to ensure efficient and safe passage of commercial and recreation vessels. The support and management of economically sound navigation projects are dependent upon reliable navigation data mandated by the River and Harbor Appropriations Act of September 22, 1922 (42 Stat. 1043), as amended and codified in 33 U.S.C. 555.

Affected Public: Business or Other For-Profit.

Frequency: On occasion.

Respondent's Obligation: Mandatory.

OMB Desk Officer: Mr. Jim Laity.

Written comments and recommendations on the proposed information collection should be sent to Mr. Laity at the Office of Management and Budget, Desk Officer for the U.S. Army Corps of Engineers, Room 10202, New Executive Office Building, Washington, DC 20503.

DOD Clearance Officer: Mr. Robert Cushing.

Written requests for copies of the information collection proposal should be sent to Mr. Cushing, WHS/DIOR, 1215 Jefferson Davis Highway, Suite 1204, Arlington, VA 22202–4302.

Dated: October 11, 2000.

Patricia L. Toppings,

Alternate OSD Federal Register Liaison Officer, Department of Defense.

[FR Doc. 00–26543 Filed 10–16–00; 8:45 am]

BILLING CODE 5001–10–M

DEPARTMENT OF EDUCATION

Submission for OMB Review; Comment Request

AGENCY: Department of Education.

SUMMARY: The Leader, Regulatory Information Management Group, Office of the Chief Information Officer invites comments on the submission for OMB review as required by the Paperwork Reduction Act of 1995.

DATES: Interested persons are invited to submit comments on or before November 16, 2000.

ADDRESSES: Written comments should be addressed to the Office of Information and Regulatory Affairs, Attention: Lauren Wittenberg, Acting Desk Officer, Department of Education, Office of Management and Budget, 725 17th Street, NW., Room 10235, New Executive Office Building, Washington, DC 20503 or should be electronically mailed to the internet address Lauren_Wittenberg@omb.eop.gov.

SUPPLEMENTARY INFORMATION: Section 3506 of the Paperwork Reduction Act of 1995 (44 U.S.C. Chapter 35) requires that the Office of Management and Budget (OMB) provide interested Federal agencies and the public an early opportunity to comment on information collection requests. OMB may amend or waive the requirement for public consultation to the extent that public participation in the approval process would defeat the purpose of the information collection, violate State or Federal law, or substantially interfere with any agency's ability to perform its statutory obligations. The Leader, Regulatory Information Management Group, Office of the Chief Information Officer, publishes that notice containing proposed information collection requests prior to submission of these requests to OMB. Each proposed information collection, grouped by office, contains the following: (1) Type of review requested, *e.g.* new, revision, extension, existing or reinstatement; (2) Title; (3) Summary of the collection; (4) Description of the need for, and proposed use of, the information; (5) Respondents and frequency of collection; and (6) Reporting and/or Recordkeeping burden. OMB invites public comment.

Dated: October 11, 2000.

John Tressler,

Leader, Regulatory Information Management, Office of the Chief Information Officer.

Office of Special Education and Rehabilitative Services

Type of Review: Extension.

Title: National Early Intervention Longitudinal Study (NEILS).

Frequency: Semi-Annually; Annually; Biennially.

Affected Public: Individuals or household; Not-for-profit institutions; State, Local, or Tribal Gov't, SEAs or LEAs.

Reporting and Recordkeeping Hour Burden:

Responses: 6,689;

Burden Hours: 5,072.

Abstract: NEILS will provide the first national picture of experiences and outcomes for infants and toddlers served in early intervention (EI) under Part C of Individuals with Disabilities Education Act (IDEA) and their families. Data are collected from families, service records, and service providers. Findings will inform special education policy and practice regarding early intervention for young children with disabilities and their families. The study will support Government Performance and Results Act (GPRA) measurement and IDEA reauthorization with data from parents, service providers and teachers of children who received early intervention services.

Requests for copies of the proposed information collection request may be accessed from *http://edicsweb.ed.gov,* or should be addressed to Vivian Reese, Department of Education, 400 Maryland Avenue, SW, Room 4050, Regional Office Building 3, Washington, D.C. 20202–4651. Requests may also be electronically mailed to the internet address OCIO_IMG_Issues@ed.gov or faxed to 202–708–9346. Please specify the complete title of the information collection when making your request.

Comments regarding burden and/or the collection activity requirements should be directed to Sheila Carey at (202) 708–6287 or via her internet address Sheila_Carey@ed.gov. Individuals who use a telecommunications device for the deaf (TDD) may call the Federal Information Relay Service (FIRS) at 1–800–877–8339.

[FR Doc. 00–26547 Filed 10–16–00; 8:45 am]

BILLING CODE 4000–01–U

DEPARTMENT OF EDUCATION

Submission for OMB Review; Comment Request

AGENCY: Department of Education.

SUMMARY: The Leader, Regulatory Information Management Group, Office of the Chief Information Officer invites comments on the submission for OMB review as required by the Paperwork Reduction Act of 1995.

DATES: Interested persons are invited to submit comments on or before November 16, 2000.

ADDRESSES: Written comments should be addressed to the Office of Information and Regulatory Affairs, Attention: Lauren Wittenberg, Acting Desk Officer, Department of Education, Office of Management and Budget, 725 17th Street, NW., Room 10235, New Executive Office Building, Washington, DC 20503 or should be electronically mailed to the internet address Lauren_Wittenberg@omb.eop.gov.

SUPPLEMENTARY INFORMATION: Section 3506 of the Paperwork Reduction Act of 1995 (44 U.S.C. Chapter 35) requires that the Office of Management and Budget (OMB) provide interested Federal agencies and the public an early opportunity to comment on information collection requests. OMB may amend or waive the requirement for public consultation to the extent that public participation in the approval process would defeat the purpose of the information collection, violate State or Federal law, or substantially interfere with any agency's ability to perform its statutory obligations. The Leader, Regulatory Information Management Group, Office of the Chief Information Officer, publishes that notice containing proposed information collection requests prior to submission of these requests to OMB. Each proposed information collection, grouped by office, contains the following: (1) Type of review requested, *e.g.* new, revision, extension, existing or reinstatement; (2) Title; (3) Summary of the collection; (4) Description of the need for, and proposed use of, the information; (5) Respondents and frequency of collection; and (6) Reporting and/or Recordkeeping burden. OMB invites public comment.

Dated: October 11, 2000.

John Tressler,

Leader, Regulatory Information Management, Office of the Chief Information Officer.

Office of Vocational and Adult Education

Type of Review: New.

Title: New American High Schools Study—Phase I Activities.

Frequency: Annually.

Affected Public: Individuals or households.

Reporting and Recordkeeping Hour Burden:

Responses: 32.

Burden Hours: 144.

Abstract: The New American High Schools (NAHS) Study is a longitudinal research project. The overall goal of this effort is to document the practices and outcomes of a group of high schools engaged in whole-school improvement efforts in order to inform both policy debate and improve secondary education.

Requests for copies of the proposed information collection request may be accessed from *http://edicsweb.ed.gov,* or should be addressed to Vivian Reese, Department of Education, 400 Maryland Avenue, SW, Room 4050, Regional Office Building 3, Washington, D.C. 20202–4651. Requests may also be electronically mailed to the internet address OCIO_IMG_Issues@ed.gov or faxed to 202–708–9346. Please specify

the complete title of the information collection when making your request.

Comments regarding burden and/or the collection activity requirements should be directed to Sheila Carey at (202) 708–6287 or via her internet address Sheila_Carey@ed.gov. Individuals who use a telecommunications device for the deaf (TDD) may call the Federal Information Relay Service (FIRS) at 1–800–877–8339.

[FR Doc. 00–26548 Filed 10–16–00; 8:45 am]

BILLING CODE 4000–01–P

DEPARTMENT OF ENERGY

Submission for OMB Review; Comment Request

AGENCY: Office of Energy Efficiency and Renewable Energy, Department of Energy.

ACTION: Notice and request for comments.

SUMMARY: The Department of Energy (DOE) has submitted the proposed information collection request (ICR) described in this notice to the Office of Management and Budget (OMB) for review and approval in accordance with the Paperwork Reduction Act of 1995 (Pub. L. 104–13. 44 U.S.C. Chapter 35). The OMB is particularly interested in comments which evaluate: (1) whether the proposed collection of information is necessary to measure the progress and success of the Combined Heat and Power Registry, (2) the accuracy of DOE's estimate of the burden of the proposed information collection, (3) ways to enhance the quality, utility, and clarity of the information to be collected, and (4) ways to minimize the burden of the collection of information on those who choose to respond.

There were not any comments received during the 60 day notice period.

DATES: Comments regarding this collection of information should be received on or before November 16, 2000.

ADDRESSES: Comments should be sent to the Office of Management and Budget, Office of Information and Regulatory Affairs, Attention: OMB Desk Officer for DOE, Room 10202, New Executive Office Building, 725 17th Street, NW., Washington DC. A copy of the comments should also be sent to Merrill Smith, Office of Power Technologies, Department of Energy, Room 5H–088, 1000 Independence Avenue, SW., Washington, DC 20585.

FOR FURTHER INFORMATION CONTACT: A copy of the ICR, with applicable supporting documentation, may be obtained from: Merrill Smith, Office of Power Technologies, Department of Energy, Room 5H–088, 1000 Independence Avenue, SW., Washington, DC 20585, (202) 586–3646; or e-mail to merrill.smith@ee.doe.gov.

SUPPLEMENTARY INFORMATION: The following proposed collection of information has been sent to OMB for clearance:

Collection Title: U.S. Department of Energy/Combined Heat and Power Registry

Type of Review: New collection.

OMB Number: None.

Type of Respondents: Individuals, Businesses, State and Local Governments.

Estimated Number of Respondents: 1,000.

Estimated Total Burden Hours: 500.

Frequency of Response: One time only.

Abstract

DOE plans to publicize widely the existence of the registry through it's Regional Support Offices, the CHP website, meetings, conferences and the like, and through its relationship with CHP organizations. Due to the recent high level of interest in CHP, DOE expects that many CHP installers, individuals, utilities, governments, and businesses will wish to register their CHP systems in order to gain recognition on the CHP webpage and also be potentially eligible for an award. Registration would take place electronically (a paper form would be available upon request) by responding to a series of very brief questions. If a system met the established criteria, a CHP certificate would be sent to the facility. Registration would take place one time only. DOE plans to aggregate the data and generate reports detailing the geographic distribution of systems and among other things, the sizes and types of systems. This data collection will assist DOE in its management of and planning for the continued success of the CHP initiative.

Issued in Washington, DC, on October 10, 2000.

Dan W. Reicher,

Assistant Secretary, Energy Efficiency and Renewable Energy.

[FR Doc. 00–26622 Filed 10–16–00; 8:45 am]

BILLING CODE 6450–01–P

DEPARTMENT OF ENERGY

Environmental Management Site-Specific Advisory Board, Rocky Flats

AGENCY: Department of Energy.

ACTION: Notice of open meeting.

SUMMARY: This notice announces a meeting of the Environmental Management Site-Specific Advisory Board (EM SSAB), Rocky Flats. The Federal Advisory Committee Act (Pub. L. No. 92–463, 86 Stat. 770) requires that public notice of these meeting be announced in the **Federal Register**.

DATES: Thursday, November 2, 2000, 6 p.m. to 9:30 p.m.

ADDRESSES: College Hill Library, Front Range Community College, 3705 West 112th Avenue, Westminster, CO 80021.

FOR FURTHER INFORMATION CONTACT: Ken Korkia, Board/Staff Coordinator, Rocky Flats Citizens Advisory Board, 9035 North Wadsworth Parkway, Suite 2250, Westminster, CO, 80021; telephone (303) 420–7855; fax (303) 420–7579.

SUPPLEMENTARY INFORMATION:

Purpose of the Board: The purpose of the Board is to make recommendations to DOE and its regulators in the areas of environmental restoration, waste management, and related activities.

Tentative Agenda

1. Quarterly update by Environmental Protection Agency, Region 8.
2. Discuss Board role in Radionuclide Soil Action Level review.
3. Environmental Protection Agency regulatory analysis for Radionuclide Soil Action Levels.
4. Department of Energy response to Kaiser-Hill Closure Project Baseline.
5. Update on Stewardship Workshop.
6. Other Board business may be conducted as necessary.

Public Participation: The meeting is open to the public. Written statements may be filed with the Board either before or after the meeting. Individuals who wish to make oral statements pertaining to agenda items should contact Ken Korkia at the address or telephone number listed above. Requests must be received at least five days prior to the meeting and reasonable provisions will be made to include the presentation in the agenda. The Deputy Designated Federal Officer is empowered to conduct the meeting in a fashion that will facilitate the orderly conduct of business. Each individual wishing to make public comment will be provided a maximum of five minutes to present their comments.

Minutes: The minutes of this meeting will be available for public review and copying at the Public Reading Room located at the Office of the Rocky Flats

Citizens Advisory Board, 9035 North Wadsworth Parkway, Suite 2250, Westminister, CO 80021; telephone (303)420–7855. Hours of operations for the Public Reading Room are 9 a.m. to 4 p.m., Monday–Friday, except Federal holidays. Minutes will also be made available by writing or calling Deb Thompson at the address or telephone number listed above.

Issued at Washington, DC on October 12, 2000.

Rachel M. Samuel,

Deputy Advisory Committee Management Officer.

[FR Doc. 00–26623 Filed 10–16–00; 8:45 am]

BILLING CODE 6450–01–P

DEPARTMENT OF ENERGY

Federal Energy Regulatory Commission

[Project Nos. 2516 and 2517]

Allegheny Energy Supply; Notice of Meeting

October 11, 2000.

Allegheny Energy Supply, licensee for the Dam No. 4 Project No. 2516 and the Dam No. 5 Project No. 2517, currently is consulting with state and federal agencies concerning the relicensing of those projects. In this regard, Commission staff intends to participate with representatives of the licensee, resource agencies, and concerned non-governmental entities at a meeting to be held at the Hagerstown Corporate Center, 10435 Downsville Pike, Hagerstown, Maryland, at 10:00 a.m., Thursday, November 2, 2000. All interested persons are welcome to attend.

For further information, please contact Charles Simons, of Allegheny Energy Supply, on (724) 838–6397.

David P. Boergers,

Secretary.

[FR Doc. 00–26551 Filed 10–16–00; 8:45 am]

BILLING CODE 6717–01–M

DEPARTMENT OF ENERGY

Federal Energy Regulatory Commission

[Docket No. EL01–1–000]

California Municipal Utilities Association, Complainant

October 11, 2000.

California Municipal Utilities Association, Complainant, v. All Jurisdictional Sellers of Energy and Ancillary Services Into The Energy and Ancillary Services Markets Operated by the California Independent System Operator Corporation and the California Power Exchange; California Independent System Operator Corporation; and California Power Exchange Corporation, Respondents. San Diego Gas & Electric Company, Investigation of Practices of the California Independent System Operator and the California Power Exchange, California Electricity Oversight Board, Public Meeting in San Diego, California; Notice of Complaint

Take notice that on October 6, 2000, the California Municipal Utilities Association submitted a Complaint, Request to Institute Cost-Base Rates, and Motion To Consolidate. CMUA alleges that the markets for energy and ancillary services operated by the California Power Exchange Corporation (the PX) and the California Independent System Operator Corporation (the ISO) are not workably competitive and that the prices in those markets are unjust and unreasonable. Further, CMUA requests that the Commission order all sellers into those markets to tender cost-based filings, and that the Commission consolidate this docket with other dockets captioned above.

Copies of the filing were served upon the ISO, the PX, and the service lists in the above-captioned dockets, and transmitted electronically through ISO-compiled electronic mail lists.

Any person desiring to be heard or to protest said filing should file a motion to intervene or a protest with the Federal Energy Regulatory Commission, 888 First Street, NE., Washington, DC 20426, in accordance with Rules 211 and 214 of the Commission's Rules of Practice and Procedure (18 CFR 385.211 and 385.214). All such motions or protests must be filed on or before October 26, 2000. Protests will be considered by the Commission in determining the appropriate action to be taken, but will not serve to make protestants parties to the proceeding. Any person wishing to become a party must file a motion to intervene. Copies of this filing are on file with the Commission and are available for public inspection in the Public Reference Room. This filing may be viewed on the Internet at http://www.ferc.fed.us/online/rims.htm (call 202–208–2222) for assistance. Answers to the complaint shall also be due on or before October 26, 2000.

David P. Boergers,

Secretary.

[FR Doc. 00–26616 Filed 10–16–00; 8:45 am]

BILLING CODE 6717–01–M

DEPARTMENT OF ENERGY

Federal Energy Regulatory Commission

[Docket No. EL01–2–000]

CAlifornians for Renewable Energy, Inc. (CARE), Complainant

October 11, 2000.

CAlifornians for Renewable Energy, Inc. (CARE), Complainant, v. Independent Energy Producers, Inc. and All Sellers of Energy and Ancillary Services Into the Energy and Ancillary Services Markets Operated by the California Independent System Operator Corporation and the California Exchange; All Scheduling Coordinators Acting On Behalf of the above Sellers; California Independent System Operator Corporation; and California Power Exchange Corporation, Respondents; Notice of Complaint

Take notice that on October 6, 2000, CAlifornians for Renewable Energy, Inc. (CARE), tendered for filing with the Federal Energy Regulatory Commission (Commission) a Complaint pursuant to Section 206 of the Federal power Act, U.S.C. § 824e, and Rule 206 of the Commission's Rules of Practice and Procedure, 18 CFR 385.206.

CARE requests that the Commission rectify unjust and unreasonable prices stemming from wholesale markets for energy and ancillary services operated by the California Independent System Operator (CALISO) and the California Power Exchange (CALPX). CARE further requests that the Commission find that the wholesale markets in California are not currently workably competitive. CARE also requests that the Commission investigate and make findings concerning the rolling power outages in the San Francisco Bay Area on June 14, 2000.

Any person desiring to be heard or to protest this filing should file a motion to intervene or protest with the Federal Energy Regulatory Commission, 888 First Street, NE., Washington, DC 20426, in accordance with Rules 211 and 214 of the Commission's Rules of Practice and Procedure (18 CFR 385.211 and 385.214). All such motions or protests must be filed on or before October 26, 2000. Protests will be considered by the Commission in determining the appropriate action to be taken, but will not serve to make protestants parties to the proceeding. Any person wishing to become a party must file a motion to intervene. Copies of this filing are on file with the Commission and are available for public inspection in the Public Reference Room. This filing may also be viewed on the Internet at

http://www.ferc.fed.us/online/rims.htm (call 202–208–2222) for assistance. Answers to the complaint shall also be due on or before October 26, 2000.

David P. Boergers,

Secretary.

[FR Doc. 00–26617 Filed 10–16–00; 8:45 am]

BILLING CODE 6717–01–M

DEPARTMENT OF ENERGY

Federal Energy Regulatory Commission

[Docket No. CP01–01–000]

Colorado Interstate Gas Company; Notice of Application

October 11, 2000.

Take notice that on October 2, 2000, Colorado Interstate Gas Company (CIG), P.O. Box 1087, Colorado Springs, Colorado 80944, filed in Docket No. CP01–001–000 an application pursuant to Sections 7(b) and 7(c) of the Natural Gas Act (NGA) and the Commission's Rules and Regulations for a certificate of public convenience and necessity authorizing CIG to construct and operate facilities and for authority to abandon certain facilities and base gas in order to: (i) Increase the deliverability of CIG's Storage Pool, and (ii) increase the capacity of its system southward out of the Cheyenne Compressor Station in Weld County, Colorado, all as more fully set forth in the application which is on file with the Commission and open to public inspection. The filing may be viewed at *http://www.ferc.fed.us/online/rims.htm* (call 202–208–222 for assistance).

CIG states that Public Service Company of Colorado (PSCo) a local distribution company that serves the Denver metropolitan area, requires the deliverability and transportation capacity to replace deliverability lost by PSCo's pending abandonment of its Leyden Underground Natural Gas Storage Facility (Leyden) and to meet requirements for additional transportation capacity. In addition, CIG states that other transportation shippers have requested new services from CIG.

Specifically, CIG proposes to increase the working gas capacity and increase deliverability at the Fort Morgan Storage Field in Morgan County, Colorado by:

- Drilling one injection/withdrawal well (#34) and converting one observation well to a salt water disposal well (#18) with associated gathering and appurtenant facilities.
- Upgrading the two segments of the Fort Morgan Storage field gathering system from MAOPs of 1,800 psig and 2,000 psig to a single MAOP of 2,160 psig through hydrostatic testing and replacement of underrated equipment.
- Increasing the maximum allowed stored gas in place from 14,322 Mmcf to 14,858 Mmcf and increasing the average shut-in reservoir bottom hole pressure to a maximum of 2,390 psia.
- Converting 600 MMcf of base gas to working gas through modification of piping at the Fort Morgan Compressor Station.

CIG also proposes to abandon the Keyes Sand Reservoir and its associated base gas at the Boehm Storage Field in Morton County, Kansas and requests any necessary authority to sell the base gas. Specifically, CIG proposes to:

- Recomplete four injection/withdrawal wells from the Keyes Reservoir formation to the G reservoir formation and convert eight Keyes injection/withdrawal wells to observation wells with all associated gathering and appurtenant facilities.
- Install a 600 horsepower leased compressor unit in late summer 2002, along with hydrogen sulfide treatment and appurtenant facilities, to remove Keyes Reservoir base gas. The compressor will be used until such time as the pressure in the Keyes Sand Reservoir is too low to be effectively utilized. CIG will then abandon the compressor and attach the Keyes injection/withdrawal wells, utilized for depleting the reservoir, to the low pressure Greenwood Gathering system until the reservoir pressure is too low to produce any additional volumes. CIG anticipates that the reservoir will be depleted by 2006. CIG requests pre-granted abandonment authority for the 600 horsepower compressor unit and proposes to defer any issue concerning the treatment of revenues resulting from the sale of the base gas until its next rate case to be filed by the end of March, 2001.

In order to increase its mainline capacity south of the Cheyenne Compressor Station, CIG proposes to:

- Construct 26.2 miles of 24-inch diameter pipeline loop and appurtenant facilities commencing at CIG's existing Cheyenne Compressor Station in Weld County, Colorado and extending southward to terminate at CIG's existing Ault Meter Station in Weld County, Colorado. CIG also proposes to install an additional meter station at the Cheyenne Compressor Station.
- Construct the new Fort Lupton Compressor Station consisting of three nameplate rated 2,225 horsepower natural gas fired reciprocating compressor units and appurtenant facilities in Weld County, Colorado.
- Construct 27 miles of 24-inch diameter pipeline loop and appurtenant facilities commencing at the proposed Fort Lupton Compressor Station in Weld County, Colorado and extending southward to CIG's existing Watkins Compressor Station in Adams County, Colorado.
- Install miscellaneous facilities under 18 CFR 2.55(a) within the Watkins Compressor Station Yard, including yard piping, pipe valves, fittings, controls, regulation and measurement.

CIG states that the above listed modifications to its system will increase CIG's Storage Pool deliverability from 775 MMcf to 877 MMcf per day and allow CIG to transport 87.6 MMcf per day southward from the Cheyenne Compressor Station and an additional 61.9 MMcf per day southward from Fort Lupton Compressor Station. CIG asserts that the project is supported by firm agreements for almost all of the capacity. CIG estimates that the project will cost $58,180,300 and proposes rolled-in rate treatment for the project.

Any questions regarding this application should be directed to James R. West, Manager, Certificates, at (719) 520–4679, Colorado Interstate Gas Company, P.O. Box 1087, Colorado Springs, Colorado 80944.

Any person desiring to be heard or to protest with reference to said application should on or before November 1, 2000, file with the Federal Energy Regulatory Commission (Commission), 888 First Street, NE, Washington, DC 20426, a motion to intervene or protest in accordance with the requirements of the Commission's Rules of Practices and Procedure (18 CFR 385.211 and 385.214) and the regulations under the Natural Gas Act (NGA) (18 CFR 157.10). All protests filed with the Commission will be considered by it in determining the appropriate action to be taken but will not serve to make the protestants parties to the proceeding. Any person wishing to become a party in any proceeding must file a motion to intervene in accordance with the Commission's rules.

A person obtaining intervenor status will be placed on the service list maintained by the Secretary of the Commission and will receive copies of all documents issued by the Commission, filed by the applicant, or filed by all other intervenors. An intervenor can file for rehearing of any Commission order and can petition for court review of any such order. However, an intervenor must serve copies of comments or any other filing it makes with the Commission to every

other intervenor in the proceeding, as well as filing an original and 14 copies with the Commission.

A person does not have to intervene, however, in order to have comments considered, a person, instead, may submit two copies of such comments to the Secretary of the Commission. Commenters will be placed on the Commission's environmental mailing list, will receive copies of environmental documents, and will be able to participate in meetings associated with the Commission's environmental review process. Commenters will not be required to serve copies of filed documents on all other parties. However, Commenters will not receive copies of all documents filed by other parties or issued by the Commission, and will not have the right to seek rehearing or appeal the Commission's final order to a Federal court.

The Commission will consider all comments and concerns equally, whether filed by Commenters or those requesting intervenor status.

Take further notice that, pursuant to the authority contained in and subject to the jurisdiction conferred upon the Commission by Section 7 and 15 of the NGA and Commission's Rules of Practice and Procedure, a hearing will be held without further notice before the Commission or its designee on this application if no motion to intervene is filed within the time required herein, if the Commission on its own review of the matter finds that a grant of the certificate is required by the public convenience and necessity. If a motion for leave to intervene is timely filed, or if the Commission on its own motion believes that a formal hearing is required, further notice of such hearing will be duly given.

Under the procedure herein provided for, unless otherwise advised, it will be unnecessary for CIG to appear or be represented at the hearing.

David P. Boergers,

Secretary.

[FR Doc. 00–26553 Filed 10–16–00; 8:45 am]

BILLING CODE 6717–01–M

DEPARTMENT OF ENERGY

Federal Energy Regulatory Commission

[Docket No. CP01–2–000]

Columbia Gas Transmission Corporation; Notice of Application

October 11, 2000.

Take notice that on October 4, 2000, Columbia Gas Transmission Corporation (Columbia), P.O. Box 1273, Charleston, West Virginia 25325–1273, filed in Docket No. CP01–2–000 an application pursuant to Section 7(b) of the Natural Gas (NGA) for permission and approval to abandon by sale, five natural gas storage fields located in various counties of West Virginia and Ohio. Columbia further requests authorization to abandon by sale the base gas in those fields, all as more fully set forth in the application which is on file with the Commission and open to public inspection. This filing may be viewed on the web at *http://www.ferc.fed.us/online/rims.htm* (call 202–208–2222 for assistance).

Columbia states that at the time of application, the purchasing parties are unknown and Columbia proposes to notify the Commission of the purchaser's identity within ten (10) days of signing a Purchase and Sale Agreement. Columbia further states that it does not propose the abandonment of service to any customer as a result of the Sale. It is said that no new or expanded services are proposed, nor is any construction or expansion of Columbia's facilities proposed in connection with the sale.

Any person desiring to be heard or any person desiring to make any protests with reference to said application should on or before November 1, 2000, file with the Federal Energy Regulatory Commission, 888 First Street, NE., Washington, DC 20426, a motion to intervene or a protest in accordance with the requirements of the Commission's Rules of Practice and Procedure (18 CFR 385.214 or 385.211) and the Regulations under the Natural Gas Act (18 CFR 157.10). All protests with the Commission will be considered by it in determining the appropriate action to be taken but will not serve to make the protestants parties to the proceeding. Any person wishing to become a party to a proceeding or to participate as a party in any hearing therein must file a motion to intervene in accordance with the Commission's Rules.

Take further notice that, pursuant to the authority contained in and subject to the jurisdiction conferred upon the Federal Energy Regulatory Commission by Sections 7 and 15 of the Natural Gas Act and the Commission's Rules of Practice and Procedure, a hearing will be held without further notice before the Commission or its designee on this application if no motion to intervene is filed within the time required herein, if the Commission on its own review of the matter finds that permission and approval for the proposed abandonment are required by the public convenience and necessity. If a motion for leave to intervene is timely filed, or if the Commission on its own motion believes that a formal hearing is required, further notice of such hearing will be duly given.

Under the procedure herein provided for, unless otherwise advised, it will be unnecessary for Columbia to appear or be represented at the hearing.

David P. Boergers,

Secretary.

[FR Doc. 00–26552 Filed 10–16–00; 8:45 am]

BILLING CODE 6717–01–M

DEPARTMENT OF ENERGY

Federal Energy Regulatory Commission

[Docket No. ES01–3–000]

MDU Resources Group, Inc.; Notice of Application

October 10, 2000.

Take notice that on October 4, 2000, MDU Resources Group, Inc. (MDU Resources) submitted an application pursuant to section 204 of the Federal Power Act seeking authorization to issue a combination of securities not to exceed in the aggregate $750,000,000 and not to exceed the following amounts:

(1) $750,000,000 of common stock;

(2) $112,500,000 of preferred stock;

(3) $225,000,000 of New Mortgage Bonds, Senior Notes, debentures, subordinated debentures, and/or guarantees from time to time;

(4) $225,000,000 of stock purchase contracts, stock purchase units, and/or warrants; and

(5) $225,000,000 of other securities, including hybrid securities or hybrid securities guaranties.

MDU Resources seeks authorization to vary the issuance amount for each of the above types of securities as long as the aggregate amount of MDU Resources' securities issued does not exceed $750,000,000. The securities are proposed to be issued from time to time over a two-year period.

MDU Resources seeks a waiver of the Commission's competitive bidding and

negotiated placement requirements in 18 CFR 34.2.

MDU Resources also requests for this authorization to supercede and replace the authorizing granted in Docket Nos. ES99–18–000 and ES99–18–001.

Any person desiring to be heard or to protest such filing should file a motion to intervene or protest with the Federal Energy Regulatory Commission, 888 First Street, NE., Washington, DC 20426, in accordance with Rules 211 and 214 of the Commission's Rules of Practice and Procedure (18 CFR 385.211 and 385.214). All such motions and protests should be filed on or before October 31, 2000. Protests will be considered by the Commission to determine the appropriate action to be taken, but will not serve to make protestants parties to the proceedings. Any person wishing to become a party must file a motion to intervene. Copies of this filing are on file with the Commission and are available for public inspection. This filing may also be viewed on the Internet at http://www.ferc.fed.us/online/rims.htm (call 202–208–2222 for assistance).

David P. Boergers,

Secretary.

[FR Doc. 00–26556 Filed 10–16–00; 8:45 am]

BILLING CODE 6717–01–M

DEPARTMENT OF ENERGY

Federal Energy Regulatory Commission

[Docket No. EL01–3–000]

Morgan Stanley Capital Group Inc., Complainant v. PJM Interconnection, L.L.C., Respondent; Notice of Filing

October 11, 2000.

Take notice that on October 6, 2000, Morgan Stanley Capital Group Inc. (MSCG), tendered for filing a complaint pursuant to Section 206 of the Federal Power Act against PJM Interconnection, L.L.C. (PJM) alleging that, in order to advance the Commission's goal of regional uniformity and coordination and to avoid other market problems, PJM should eliminate (1) its bid cap by the end of October 2000, to coincide with the expiration of the New York and New England bid caps and (2) eliminate its ICAP requirement and deficiency charge commensurate with ISO–NE's actions to date. Given the immediacy of this date, MSCG requests fast track procession of its complaint by the Commission.

Copies of the filing were served upon PJM and other interested parties.

Any person desiring to be heard or to protest this filing should file a motion to intervene or protest with the Federal Energy Regulatory Commission, 888 First Street, NE., Washington, DC 20426, in accordance with Rules 211 and 214 of the Commission's Rules of Practice and Procedure (18 CFR 385.211 and 385.214). All such motions or protests must be filed on or before October 25, 2000. Protests will be considered by the Commission in determining the appropriate action to be taken, but will not serve to make protestants parties to the proceeding. Any person wishing to become a party must file a motion to intervene. Copies of this filing are on file with the Commission and are available for public inspection in the Public Reference Room. This filing may also be viewed on the Internet a http://www.ferc.fed.us/online/rims.htm (call 202–208–2222) for assistance. Answers to the complaint shall also be due on or before October 26, 2000.

David P. Boergers,

Secretary.

[FR Doc. 00–26618 Filed 10–16–00; 8:45 am]

BILLING CODE 6717–01–M

DEPARTMENT OF ENERGY

Federal Energy Regulatory Commission

[Docket No. EG01–1–000]

Quinnipiac Energy, LLC; Notice of Application for Commission Determination of Exempt Wholesale Generator Status

October 10, 2000.

Take notice that on October 4, 2000, Quinnipiac Energy, LLC (Quinnipiac), with its address at 800 Village Walk #324, Guilford, CT 06437, filed with the Federal Energy Regulatory Commission (Commission) an application for determination of exempt wholesale generator status pursuant to part 365 of the Commission's regulations.

Quinnipiac is a Delaware limited liability company that will be engaged directly and exclusively in the business of owning or operating, or both owning and operating, all or part of one or more eligible facilities to be located in New Haven, Connecticut. The eligible facilities will consist of an approximately 75 MW oil-fired electric generation project and related interconnection facilities. The output of the eligible facilities will be sold at wholesale.

Any person desiring to be heard concerning the application for exempt wholesale generator status should file a motion to intervene or comments with the Federal Energy Regulatory Commission, 888 First Street, NE, Washington, DC 20426, in accordance with Rules 211 and 214 of the Commission's Rules of Practice and Procedure (18 CFR 385.211 and 385.214). The Commission will limit its consideration of comments to those that concern the adequacy or accuracy of the application. All such motions and comments should be filed on or before October 31, 2000, and must be served on the applicant. Any person wishing to become a party must file a motion to intervene. Copies of this filing are on file with the Commission and are available for public inspection or on the Internet at http://www.ferc.fed.us/online/rims.htm (please call (202) 208–2222 for assistance).

David P. Boergers

Secretary

[FR Doc. 00–26557 Filed 10–16–00; 8:45 am]

BILLING CODE 6717–01–M

DEPARTMENT OF ENERGY

Federal Energy Regulatory Commission

[Docket No. EC00–144–000]

Reliant Energy Coolwater, LLC, et al.; Notice of Filing

October 11, 2000.

Take notice that on September 27, 2000, Reliant Energy Coolwater, LLC, Reliant Energy Desert Basin, LLC, Reliant Energy Ellwood, LLC, Reliant Energy Etiwanda, LLC, Reliant Energy Indian River, LLC, Reliant Energy Mandalay, LLC, Reliant Energy Maryland Holdings, LLC, Reliant Energy Mid-Atlantic Power Holdings, LLC, Reliant Energy New Jersey Holdings, LLC, Reliant Energy Ormond Beach, LLC, Reliant Energy Osceola, LLC, Reliant Energy Shelby County, LP, Reliant Energy Services, Inc. and EL Dorado Energy, LLC (collectively, the Applicants), submitted an application pursuant to Section 203 of the Federal Power Act, seeking authorization for a proposed corporate restructuring and the resulting indirect transfer of jurisdictional facilities, and requesting expedited consideration and certain waivers.

The Applicants state that, as a result of a proposed corporate restructuring of certain of the Applicants' affiliates, there will be a transfer of indirect contol of Applicants' jurisdictional facilities. The Applicants further state that the proposed corporate Restructuring will have no effect on the jurisdictional

facilities, nor will it have any effect on competition, rates or regulation.

Any person desiring to be heard or to protest such filing a motion to intervene or protest with the Federal Energy Regulatory Commission, 888 First Street, NE, Washington, DC 20426, in accordance with Rules 211 and 214 of the Commission's Rules of Practice and Procedure (18 CFR 385.211 and 385.214). All such motions and protests should be filed on or before October 18, 2000. Protests will be considered by the Commission to determine the appropriate action to be taken, but will not serve to make protestants parties to the proceedings. Any person wishing to become a party must file a motion to intervene. Copies of this filing are on file with the Commission and are available for public inspection. This filing may also be viewed on the Internet at http://www.ferc.fed.us/online/rims.htm (call 202–208–2222 for assistance).

David P. Boergers,

Secretary.

[FR Doc. 00–26554 Filed 10–16–00; 8:45 am]

BILLING CODE 6717–01–M

DEPARTMENT OF ENERGY

Federal Energy Regulatory Commission

[Docket Nos. ER00–936–000 and ER00–936–003; ER00–937–000 and ER00–937–003]

Southern Energy Delta, L.L.C. and Southern Energy Potrero, L.L.C.; Notice of Filing

October 11, 2000.

Take notice that on September 28, 2000, Southern Energy Delta, L.L.C. (SE Delta) and Southern Energy Potrero, L.L.C. (SE Potrero) (collectively the Southern Parties) filed an Offer of Settlement which represents an integrated and complete resolution of issues in the above-captioned proceedings among and between the following parties (the Supporting Parties): the Southern Parties, the California Independent System Operator Corporation (CAISO), and Pacific Gas and Electric Company (PG&E).

Any person desiring to be heard or to protest such filing should file a motion to intervene or protest with the Federal Energy Regulatory Commission, 888 First Street, NE., Washington, DC 20426, in accordance with Rules 211 and 214 of the Commission's Rules of Practice and Procedure (18 CFR 385.211 and 385.214). All such motions and protests should be filed on or before October 19, 2000. Protests will be considered by the Commission to determine the appropriate action to be taken, but will not serve to make protestants parties to the proceedings. Any person wishing to become a party must file a motion to intervene. Copies of this filing are on file with the Commission and are available for public inspection. This filing may also be viewed on the Internet at http://www.ferc.fed.us/online/rims.htm (call 202–208–2222 for assistance).

David P. Boergers,

Secretary.

[FR Doc. 00–26555 Filed 10–16–00; 8:45 am]

BILLING CODE 6717–01–M

DEPARTMENT OF ENERGY

Federal Energy Regulatory Commission

[Docket No. EL00–62–006, et al.]

ISO New England, Inc., et al.; Electric Rate and Corporate Regulation Filings

October 11, 2000.

Take notice that the following filings have been made with the Commission:

1. ISO New England Inc.

[Docket No. EL00–62–006]

Take notice that on October 5, 2000, the New England Power Pool (NEPOOL) and ISO New England Inc. filed its monthly update concerning its timetable for implementation of the various components of the Congestion Management and Multi-Settlement Systems, as directed by the Commission in its June 28, 2000 Order in this proceeding.

Comment date: November 6, 2000, in accordance with Standard Paragraph E at the end of this notice.

2. Cinergy Services, Inc.

[Docket No. ER01–46–000]

Take notice that on October 5, 2000, Cinergy Services, Inc. (Cinergy), tendered for filing a Service Agreement under Cinergy's Resale, Assignment or Transfer of Transmission Rights and Ancillary Service Rights Tariff (the Tariff) entered into between Cinergy and Merchant Energy Group of the Americas, Inc. (MEGA). This Service Agreement has been executed by both parties and is to replace the existing unexecuted Service Agreement.

Comment date: October 26, 2000, in accordance with Standard Paragraph E at the end of this notice.

3. Cinergy Services, Inc.

[Docket No. ER01–47–000]

Take notice that on October 5, 2000, Cinergy Services, Inc. (Cinergy), tendered for filing a Service Agreement under Cinergy's Resale, Assignment or Transfer of Transmission Rights and Ancillary Service Rights Tariff (the Tariff) entered into between Cinergy and Rainbow Energy Marketing Corporation (REMC). This Service Agreement has been executed by both parties and is to replace the existing unexecuted Service Agreement.

Comment date: October 26, 2000, in accordance with Standard Paragraph E at the end of this notice.

4. Powerex Corp.

[Docket No. ER01–48–000]

Take notice that on October 5, 2000, Powerex Corp. tendered for filing Notice of Succession pursuant to 18 CFR 35.16 and 131.51 of the Commission's Regulations. Powerex Corp. is succeeding to the Rate Schedule FERC No. 1, Market-Based Rate Schedule filed by British Columbia Power Exchange Corporation in Docket No. ER97–4024–000, effective August 1, 1997.

Comment date: October 25, 2000, in accordance with Standard Paragraph E at the end of this notice.

5. The Detroit Edison Company

[Docket No. ER01–49–000]

Take notice that on October 5, 2000, The Detroit Edison Company (Detroit Edison), tendered for filing, Service Agreements (Service Agreements) for Short-Term Firm and Non-Firm Point-to-Point Transmission Service under the Open Access Transmission Tariff of Detroit Edison, FERC Electric Tariff No. 1. These Service Agreements are between Detroit Edison and DTE Energy Trading, dated as of September 27, 2000. The parties have not engaged in any transactions under the Service Agreements prior to thirty days to this filing.

Detroit Edison requests that the Service Agreements be made effective as rate schedules as of October 27, 2000.

Comment date: October 26, 2000, in accordance with Standard Paragraph E at the end of this notice.

6. California Independent System Operator Corporation

[Docket No. ER01–50–000]

Take notice that on October 5, 2000, the California Independent System Operator Corporation (ISO), tendered for filing the Middle Fork-Ralston Physical Scheduling Plant Agreement (Agreement) between the ISO and Pacific Gas and Electric Company (PG&E), for acceptance by the Commission. The purpose of the Agreement is to govern the treatment of PG&E's Middle Fork-Ralston Units, which consists of three Generating

Units, as a single Physical Scheduling Plant (PSP) for purposes of providing Regulation to the ISO. The ISO states that this filing has been served upon PG&E, the California Electricity Oversight Board, and the California Public Utilities Commission.

The ISO is requesting waiver of the 60-day notice requirement to allow the Agreement to be made effective as of October 21, 2000.

Comment date: October 26, 2000, in accordance with Standard Paragraph E at the end of this notice.

7. Jersey Central Power & Light Company, Metropolitan Edison Company and Pennsylvania Electric Company

[Docket No. ER01–51–000]

Take notice that on October 5, 2000, Jersey Central Power & Light Company, Metropolitan Edison Company and Pennsylvania Electric Company (d/b/a GPU Energy), tendered for filing an executed Service Agreement between GPU Energy and Southern Company Energy Marketing L.P. (SCEM), dated October 4, 2000. This Service Agreement specifies that SCEM has agreed to the rates, terms and conditions of GPU Energy's Market-Based Sales Tariff (Sales Tariff) designated as FERC Electric Rate Schedule, Second Revised Volume No. 5. The Sales Tariff allows GPU Energy and SCEM to enter into separately scheduled transactions under which GPU Energy will make available for sale, surplus capacity and/or energy.

GPU Energy requests a waiver of the Commission's notice requirements for good cause shown and an effective date of October 4, 2000 for the Service Agreement.

GPU Energy has served copies of the filing on regulatory agencies in New Jersey and Pennsylvania.

Comment date: October 26, 2000, in accordance with Standard Paragraph E at the end of this notice.

8. PJM Interconnection, L.L.C.

[Docket No. ER01–52–000]

Take notice that on October 5, 2000, PJM Interconnection, L.L.C. (PJM), tendered for filing three service agreements with HIS Power & Water, L.L.C. (HIS Power): (1) an executed umbrella service agreement for short-term firm point-to-point transmission service, (2) an executed service agreement for non-firm point-to-point transmission service, and (3) an executed umbrella service agreement for network integration transmission service under state required retail access programs.

Copies of this filing were served upon HIS Power, and the state commissions within the PJM control area.

Comment date: October 26, 2000, in accordance with Standard Paragraph E at the end of this notice.

9. The Confederated Tribes of the Warm Springs Reservation of Oregon, a Federally Recognized Indian Tribe, and Warm Springs Power Enterprises, a Chartered Enterprise of the Confederated Tribes of the Warm Springs Reservation of Oregon

[Docket No. ER01–53–000

Take notice that on October 5, 2000, the Confederated Tribes of the Warm Springs Reservation of Oregon (Tribe), a federally recognized Indian tribe, and Warm Springs Power Enterprises (WSPE), a chartered tribal enterprise, (jointly referred to as Petitioners) tendered for filing an application requesting the Commission to: (1) accept for filing WSPE's Rate Schedule No.1, which will permit the Petitioners to engage in wholesale electric power and energy transactions at market-based rates; and (2) grant such other waivers and blanket authorizations as have been granted to other power marketers. This Application is conditioned on the Commission's finding of public utility jurisdiction over the Petitioners. The Petitioners simultaneously request that FERC disclaim jurisdiction on the grounds that the Petitioners are instrumentalities of the federal government. Irrespective of whether Petitioners are deemed to be jurisdictional public utilities, Petitioners also request: blanket approval, under Parts 20 and 34 of the Commission's Regulations, of future issuances regarding securities and assumptions of liabilities, subject to objection by an interested party; and waiver of Parts 41, 101, and 141 with the exception of 18 CFR 141.14–141.15.

The Petitioners do not currently sell power to any person pursuant to the proposed rate schedule. A copy of their filing, however, has been served on the Oregon Public Utility Commission as a courtesy.

Comment date: October 26, 2000, in accordance with Standard Paragraph E at the end of this notice.

10. Southwest Power Pool, Inc.

[Docket No. ER01–54–000]

Take notice that on October 5, 2000, Southwest Power Pool, Inc. (SPP), tendered for filing five executed service agreement for Firm Point-to-Point Transmission Service with Entergy Power Marketing Corporation, The Energy Authority, Inc., and Western Resources (collectively, the Transmission Customers).

Copies of this filing were served on the Transmission Customers.

Comment date: October 26, 2000, in accordance with Standard Paragraph E at the end of this notice.

11. Virginia Electric and Power Company

[Docket No. ER01–55–000]

Take notice that on October 6, 2000, Virginia Electric and Power Company (Dominion Virginia Power or the Company), tendered for filing a Service Agreement for Long Term Firm Point-to-Point Transmission Service with Dominion Energy Clearinghouse. This Agreement will be designated as Service Agreement No. 303 under Company's FERC Electric Tariff, Revised Volume No. 5.

The foregoing Service Agreement is tendered for filing under the Open Access Transmission Tariff to Eligible Purchasers effective June 7, 2000. Under the tendered Service Agreement, Dominion Virginia Power will provide long term firm point-to-point service to the Transmission Customer under the rates, terms and conditions of the Open Access Transmission Tariff.

Dominion Virginia Power requests an effective date of October 6, 2000, the date of filing of the Service Agreement.

Copies of the filing were served upon Dominion Energy Clearinghouse, the Virginia State Corporation Commission, and the North Carolina Utilities Commission.

Comment date: October 27, 2000, in accordance with Standard Paragraph E at the end of this notice.

12. DPL Energy

[Docket No. ER01–56–000]

Take notice that on October 6, 2000, DPL Energy (DPLE), tendered for filing a long-term transaction agreement with The Dayton Power and Light Company.

Comment date: October 27, 2000, in accordance with Standard Paragraph E at the end of this notice.

13. Arizona Public Service Company

[Docket No. ER01–57–000]

Take notice that on October 6, 2000, Arizona Public Service Company (APS), tendered for filing a revision to the Power Sale Agreement between APS and Citizens Utilities Company.

A copy of this filing has been served on Citizens Utilities Company and the Arizona Corporation Commission.

Comment date: October 27, 2000, in accordance with Standard Paragraph E at the end of this notice.

14. Ameren Services Company

[Docket No. ER01–58–000]

Take notice that on October 6, 2000, Ameren Services Company (ASC), tendered for filing Service Agreements for Firm Point-to-Point Transmission Service and Non-Firm Point-to-Point Transmission Service between ASC and NRG Power Marketing Inc., Ameren Energy Marketing Company and FPL Energy Power Marketing, Inc. ASC asserts that the purpose of the Agreements is to permit ASC to provide transmission services to the parties pursuant to Ameren's Open Access Transmission Tariff.

Comment date: October 27, 2000, in accordance with Standard Paragraph E at the end of this notice.

15. Cinergy Solutions Partners, LLC

[Docket No. QF00–95–000]

Take notice that on October 4, 2000, Cinergy Solutions Partners, LLC (CSP) filed with the Federal Energy Regulatory Commission (Commission) supplemental information regarding its September 18, 2000 application for certification of a facility as a qualifying cogeneration facility pursuant to Section 292.207(b) of the Commission's regulations. No determination has been made that the submittal constitutes a complete filing.

The facility will be a topping cycle cogeneration facility, primarily fired by natural gas (the ''Facility''). The thermal energy is used by an industrial food processing facility. The Facility, which will be located in Hamilton County, Ohio, will be owned by Initial Project Company, and indirectly owned by CSP. The interests in CSP pertaining to the Facility are owned by Cinergy Solutions, Inc., and IPP Ventures, LLC.

Comment date: November 3, 2000, in accordance with Standard Paragraph E at the end of this notice.

Standard Paragraphs

E. Any person desiring to be heard or to protest such filing should file a motion to intervene or protest with the Federal Energy Regulatory Commission, 888 First Street, NE., Washington, DC 20426, in accordance with Rules 211 and 214 of the Commission's Rules of Practice and Procedure (18 CFR 385.211 and 385.214). All such motions or protests should be filed on or before the comment date. Protests will be considered by the Commission in determining the appropriate action to be taken, but will not serve to make protestants parties to the proceeding. Any person wishing to become a party must file a motion to intervene. Copies of these filings are on file with the Commission and are available for public inspection. This filing may also be viewed on the Internet at http://www.ferc.fed.us/ online/rims.htm (call 202–208–2222 for assistance).

David P. Boergers,

Secretary.

[FR Doc. 00–26615 Filed 10–16–00; 8:45 am]

BILLING CODE 6717–01–P

DEPARTMENT OF ENERGY

Federal Energy Regulatory Commission

[Docket No. ER00–3216–002, et al.]

Mid-Atlantic Energy Development Company, et al.; Electric Rate and Corporate Regulation Filings

October 10, 2000

Take notice that the following filings have been made with the Commission:

1. Mid-Atlantic Energy Development Company

[Docket No. ER00–3216–002]

Take notice that on October 5, 2000, Mid-Atlantic Energy Development Company (Mid-Atlantic), tendered for filing an amendment to its application in this proceeding that included a revised Statement of Policy and Code of Conduct with Respect to the Relationship between Mid-Atlantic and the FirstEnergy Operating Companies. Mid-Atlantic requested that the revised Statement of Policy and Code of Conduct be substituted for that previously submitted on August 21, 2000.

Comment date: October 26, 2000, in accordance with Standard Paragraph E at the end of this notice.

2. Carolina Power & Light Company

[Docket No. ER01–33–000]

Take notice that on October 4, 2000, Carolina Power & Light Company (CP&L), tendered for filing Service Agreements for Short-Term Firm and Non-Firm Point-to-Point Transmission Service with FirstEnergy Corp., and a Service Agreement for Non-Firm Point-to-Point Transmission Service with Oglethorpe Power Corporation. Service to each Eligible Customer will be in accordance with the terms and conditions of Carolina Power & Light Company's Open Access Transmission Tariff.

CP&L is requesting an effective date of September 25, 2000 for the Agreement with Oglethorpe and September 29, 2000 for the Agreements with FirstEnergy.

Copies of the filing were served upon the North Carolina Utilities Commission and the South Carolina Public Service Commission.

Comment date: October 25, 2000, in accordance with Standard Paragraph E at the end of this notice.

3. Pacific Gas and Electric Company

[Docket No. ER01–34–000]

Take notice that on October 4, 2000, Pacific Gas and Electric Company (PG&E), tendered for filing a Generator Special Facilities Agreement, a Generator Interconnection Agreement, and a Supplemental Letter Agreement to GSFA for Sonoma Generating Facility Owned by Geysers Power Company, L.L.C. (collectively, the Agreements) between PG&E and the Geysers Power Company, L.L.C. (collectively, Parties) to correct the rate schedule designations on these Agreements in compliance with the Commission's Letter Order dated September 20, 2000. That Letter Order conditionally accepted these Agreements effective on March 1, 2000 provided that PG&E refile these Agreements with corrected rate schedule designations as required in Order No. 614, FERC Stats. & Regs. ¶ 31,096.

Copies of this filing have been served upon Geysers Power, Sacramento Municipal Utility District, and the California Public Utilities Commission.

Comment date: October 25, 2000, in accordance with Standard Paragraph E at the end of this notice.

4. Cinergy Services, Inc.

[Docket No. ER01–35–000]

Take notice that on October 4, 2000, Cinergy Services, Inc. (Cinergy) and Allegheny Power are requesting a cancellation of Service Agreement No. 6, under Cinergy Operating Companies, Resale of Transmission Rights and Ancillary Service Rights, FERC Electric Tariff Original Volume No. 8.

Cinergy requests an effective date of October 1, 2000.

Comment date: October 25, 2000, in accordance with Standard Paragraph E at the end of this notice.

5. Puget Sound Energy, Inc.

[Docket No. ER01–37–000]

Take notice that on October 4, 2000, Puget Sound Energy, Inc., as Transmission Provider tendered for filing a Service Agreement for Short-Term Firm Point-To-Point Transmission Service with the United States of America Department of Energy acting by and through the Bonneville Power Administration (Bonneville), as Transmission Customer.

A copy of the filing was served upon Bonneville.

Comment date: October 25, 2000, in accordance with Standard Paragraph E at the end of this notice.

6. Louisville Gas and Electric Company/ Kentucky Utilities Company

[Docket No. ER01–38–000]

Take notice that on October 4, 2000, Louisville Gas and Electric Company (LG&E)/Kentucky Utilities (KU) (hereinafter Companies), tendered for filing an unexecuted unilateral Service Sales Agreement between Companies and PPL EnergyPlus, LLC under the Companies' Rate Schedule MBSS.

Comment date: October 25, 2000, in accordance with Standard Paragraph E at the end of this notice.

7. Commonwealth Edison Company

[Docket No. ER01–39–000]

Take notice that on October 4, 2000, Commonwealth Edison Company (ComEd) tendered for filing an executed service agreement for Conectiv Energy Supply, Inc. (Conectiv) under ComEd's FERC Electric Market Based-Rate Schedule for power sales.

ComEd requests an effective date of September 21, 2000, for the service agreement and accordingly seeks waiver of the Commission's notice requirements. Copies of this filing were served on Conectiv.

Comment date: October 25, 2000, in accordance with Standard Paragraph E at the end of this notice.

8. Quinnipiac Energy, LLC

[Docket No. ER01–40–000]

Take notice that on October 4, 2000, Quinnipiac Energy, LLC (Quinnipiac) tendered for filing an application under Section 205 of the Federal Power Act requesting approval of it proposed market-based rate, waiver of certain regulations, and blanket approvals. The proposed market-based rate governs Quinnipiac's sales of capacity and energy at wholesale, the sale of ancillary services and the sale, assignment or transfer of transmission capacity or other transmission service or rights of Quinnipiac.

Comment date: October 25, 2000, in accordance with Standard Paragraph E at the end of this notice.

9. Sithe Fore River Development LLC

[Docket No. ER01–41–000]

Take notice that on October 4, 2000, Sithe Fore River Development LLC (Sithe Fore River Development), tendered for filing an application (the Application) under Section 205 of the Federal Power Act petitioning the Commission for acceptance of its proposed FERC Electric Rate Schedules Nos. 1 and 2. Sithe Fore River Development requests authority to make wholesale power sales, including energy, capacity and ancillary services at market-based rates, requests certain blanket authorizations, and waiver of certain of the Commission's Regulations.

Sithe Fore River Development requests that the tendered rate schedules become effective as of the later of the closing date of the stock sale transaction by which 49.9 percent of the outstanding stock in Sithe Energies, Inc., is transferred to Exelon (Fossil) Holdings, L.L.C., and the closing date of the Sithe Boston Financing transaction, as described within the Application.

Comment date: October 25, 2000, in accordance with Standard Paragraph E at the end of this notice.

10. Sithe Mystic Development LLC

[Docket No. ER01–42–000]

Take notice that on October 4, 2000, Sithe Mystic Development LLC (Sithe Mystic Development), tendered for filing an application (the Application) under Section 205 of the Federal Power Act petitioning the Commission for acceptance of its proposed FERC Electric Rate Schedules Nos. 1 and 2. Sithe Mystic Development requests authority to make wholesale power sales, including energy, capacity and ancillary services at market-based rates, requests certain blanket authorizations, and waiver of certain of the Commission's Regulations.

Sithe Mystic Development requests that the tendered rate schedules become effective as of the later of the closing date of the stock sale transaction by which 49.9 percent of the outstanding stock in Sithe Energies, Inc., is transferred to Exelon (Fossil) Holdings, L.L.C., and the closing date of the Sithe Boston Financing transaction, as described within the Application.

Comment date: October 25, 2000, in accordance with Standard Paragraph E at the end of this notice.

11. Cinergy Services, Inc.

[Docket No. ER01–43–000]

Take notice that on October 5, 2000, Cinergy Services, Inc. (Cinergy), tendered for filing a Service Agreement under Cinergy's Resale, Assignment or Transfer of Transmission Rights and Ancillary Service Rights Tariff (the Tariff) entered into between Cinergy and Reliant Energy Services, Inc., (Reliant). This Service Agreement has been executed by both parties and is to replace the existing unexecuted Service Agreement.

Comment date: October 26, 2000, in accordance with Standard Paragraph E at the end of this notice.

12. Cinergy Services, Inc.

[Docket No. ER01–44–000]

Take notice that on October 5, 2000, Cinergy Services, Inc. (Cinergy), tendered for filing a Service Agreement under Cinergy's Resale, Assignment or Transfer of Transmission Rights and Ancillary Service Rights Tariff (the Tariff) entered into between Cinergy and Commonwealth Edison Company (ComEd). This Service Agreement has been executed by both parties and is to replace the existing unexecuted Service Agreement.

Comment date: October 26, 2000, in accordance with Standard Paragraph E at the end of this notice.

13. Cinergy Services, Inc.

[Docket No. ER01–45–000]

Take notice that on October 5, 2000, Cinergy Services, Inc. (Cinergy), tendered for filing a Service Agreement under Cinergy's Resale, Assignment or Transfer of Transmission Rights and Ancillary Service Rights Tariff (the Tariff) entered into between Cinergy and Griffin Energy Marketing, L.L.C., (Griffin). This Service Agreement has been executed by both parties and is to replace the existing unexecuted Service Agreement.

Comment date: October 26, 2000, in accordance with Standard Paragraph E at the end of this notice.

Standard Paragraphs

E. Any person desiring to be heard or to protest such filing should file a motion to intervene or protest with the Federal Energy Regulatory Commission, 888 First Street, NE., Washington, DC 20426, in accordance with Rules 211 and 214 of the Commission's Rules of Practice and Procedure (18 CFR 385.211 and 385.214). All such motions or protests should be filed on or before the comment date. Protests will be considered by the Commission in determining the appropriate action to be taken, but will not serve to make protestants parties to the proceeding. Any person wishing to become a party must file a motion to intervene. Copies of these filings are on file with the Commission and are available for public inspection. This filing may also be viewed on the Internet at http://www.ferc.fed.us/ online/rims.htm (call 202–208–2222 for assistance).

David P. Boergers,

Secretary.

[FR Doc. 00–26549 Filed 10–16–00; 8:45 am]

BILLING CODE 6717–01–P

DEPARTMENT OF ENERGY

Federal Energy Regulatory Commission

[Docket No. ER00–3243–002, et al.]

West Texas Utilities Company, et al.; Electric Rate and Corporate Regulation Filings

October 6, 2000.

Take notice that the following filings have been made with the Commission:

1. West Texas Utilities Company

[Docket No. ER00–3243–002]

Take notice that on October 3, 2000, West Texas Utilities Company (WTU) filed a copy of its Wholesale Power Choice Tariff (WPC Tariff). The Tariff is reformatted to conform with the requirements of Order No. 614 but there are no changes to the currently effective tariff language.

WTU seeks an effective date of June 15, 2000 and, accordingly, seeks waiver of the Commission's notice requirements.

Copies of the filing have been served on all of WTU's customers under the WPC Tariff and on the Public Utility Commission of Texas.

Comment date: October 24, 2000, in accordance with Standard Paragraph E at the end of this notice.

2. Sierra Pacific Power Company and Nevada Power Company

[Docket No. ER00–2997–001]

Take notice that on October 4, 2000, Sierra Pacific Power Company and Nevada Power Company tendered for filing their compliance filing in the above-captioned docket.

This filing has been served on all parties on the official service list in this proceeding.

Comment date: October 25, 2000, in accordance with Standard Paragraph E at the end of this notice.

3. Madison Gas & Electric Company, Wisconsin Public Service Corp., and American Transmission Company LLC

[Docket No. EC00–136–000]

Take notice that on October 3, 2000, Madison Gas & Electric Company and Wisconsin Public Service Corp. filed supplemental information relating to their Section 203 Application for Authorization to Transfer Transmission Assets.

A copy of the filing has been served on the Public Service Commission of Wisconsin.

Comment date: October 24, 2000, in accordance with Standard Paragraph E at the end of this notice.

4. Cinergy Services, Inc.

[Docket No. ER01–16–000]

Take notice that on October 3, 2000, Cinergy Services, Inc. (Cinergy) and South Jersey Energy Company filed a Notice of Cancellation of Service Agreement No. 127, under Cinergy Operating Companies, Resale of Transmission Rights and Ancillary Service Rights, FERC Electric Tariff Original Volume No. 8.

Cinergy requests an effective date of October 1, 2000.

Comment date: October 24, 2000, in accordance with Standard Paragraph E at the end of this notice.

5. Cinergy Services, Inc.

[Docket No. ER01–17–000]

Take notice that on October 3, 2000, Cinergy Services, Inc. (Cinergy) and Wisconsin Power & Light Company filed a Notice of Cancellation of Service Agreement No. 148, under Cinergy Operating Companies, Resale of Transmission Rights and Ancillary Service Rights, FERC Electric Tariff Original Volume No. 8.

Cinergy requests an effective date of October 1, 2000.

Comment date: October 24, 2000, in accordance with Standard Paragraph E at the end of this notice.

6. Cinergy Services, Inc.

[Docket No. ER01–18–000]

Take notice that on October 3, 2000, Cinergy Services, Inc. (Cinergy) and American Energy Trading, Inc. filed a Notice of Cancellation of Service Agreement No. 10, under Cinergy Operating Companies, Resale of Transmission Rights and Ancillary Service Rights, FERC Electric Tariff Original Volume No. 8.

Cinergy requests an effective date of October 1, 2000.

Comment date: October 24, 2000, in accordance with Standard Paragraph E at the end of this notice.

7. Cinergy Services, Inc.

[Docket No. ER01–19–000]

Take notice that on October 3, 2000, Cinergy Services, Inc. (Cinergy) and Maine Public Service Company filed a Notice of Cancellation of Service Agreement No. 78, under Cinergy Operating Companies, Resale of Transmission Rights and Ancillary Service Rights, FERC Electric Tariff Original Volume No. 8.

Cinergy requests an effective date of October 1, 2000.

Comment date: October 24, 2000, in accordance with Standard Paragraph E at the end of this notice.

8. Cinergy Services, Inc.

[Docket No. ER01–20–000]

Take notice that on October 3, 2000, Cinergy Services, Inc. (Cinergy) and Niagara Mohawk Power Corporation filed a Notice of Cancellation of Service Agreement No. 94, under Cinergy Operating Companies, Resale of Transmission Rights and Ancillary Service Rights, FERC Electric Tariff Original Volume No. 8.

Cinergy requests an effective date of October 1, 2000.

Comment date: October 24, 2000, in accordance with Standard Paragraph E at the end of this notice.

9. Cinergy Services, Inc.

[Docket No. ER01–21–000]

Take notice that on October 3, 2000, Cinergy Services, Inc. (Cinergy) and Montaup Electric Company filed a Notice of Cancellation of Service Agreement No. 87, under Cinergy Operating Companies, Resale of Transmission Rights and Ancillary Service Rights, FERC Electric Tariff Original Volume No. 8.

Cinergy requests an effective date of October 1, 2000.

Comment date: October 24, 2000, in accordance with Standard Paragraph E at the end of this notice.

10. Cinergy Services, Inc.

[Docket No. ER01–22–000]

Take notice that on October 3, 2000, Cinergy Services, Inc. (Cinergy) and IES Utilities, Inc. filed a Notice of Cancellation of Service Agreement No. 65, under Cinergy Operating Companies, Resale of Transmission Rights and Ancillary Service Rights, FERC Electric Tariff Original Volume No. 8.

Cinergy requests an effective date of October 1, 2000.

Comment date: October 24, 2000, in accordance with Standard Paragraph E at the end of this notice.

11. Cinergy Services, Inc.

[Docket No. ER01–23–000]

Take notice that on October 3, 2000, Cinergy Services, Inc. (Cinergy) and South Carolina Public Service Authority filed a Notice of Cancellation of Service Agreement No. 126, under Cinergy Operating Companies, Resale of Transmission Rights and Ancillary Service Rights, FERC Electric Tariff Original Volume No. 8.

Cinergy requests an effective date of October 1, 2000.

Comment date: October 23, 2000, in accordance with Standard Paragraph E at the end of this notice.

12. The Detroit Edison Company

[Docket No. ER01–24–000]

Take notice that on October 3, 2000, The Detroit Edison Company (Detroit Edison) tendered for filing Service Agreements (Service Agreements) for Short-term Firm and Non-Firm Point-to-Point Transmission Service under the Joint Open Access Transmission Tariff of Consumers Energy Company and Detroit Edison, FERC Electric Tariff No. 1. These Service Agreements are between Detroit Edison and The Energy Authority, dated as of September 5, 2000. The parties have not engaged in any transactions under the Service Agreements prior to thirty days to this filing.

Detroit Edison requests that the Service Agreements be made effective as rate schedules as of October 5, 2000.

Comment date: October 24, 2000, in accordance with Standard Paragraph E at the end of this notice.

13. Alliant Energy Corporate Services, Inc.

[Docket No. ER01–25–000]

Take notice that on October 3, 2000, Alliant Energy Corporate Services, Inc. (Alliant Energy) tendered for filing executed Service Agreements for short-term firm point-to-point transmission service and non-firm point-to-point transmission service, establishing Midwest Renewable Energy Corporation as a point-to-point Transmission Customer under the terms of the Alliant Energy Corporate Services, Inc. transmission tariff.

Alliant Energy Corporate Services, Inc. requests an effective date of September 25, 2000, and accordingly, seeks waiver of the Commission's notice requirements.

A copy of this filing has been served upon the Illinois Commerce Commission, the Minnesota Public Utilities Commission, the Iowa Department of Commerce, and the Public Service Commission of Wisconsin.

Comment date: October 24, 2000, in accordance with Standard Paragraph E at the end of this notice.

14. The Detroit Edison Company

[Docket No. ER01–26–000]

Take notice that on October 3, 2000, The Detroit Edison Company (Detroit Edison) tendered for filing Service Agreements (Service Agreements) for Short-term Firm and Non-Firm Point-to-Point Transmission Service under the Joint Open Access Transmission Tariff of Consumers Energy Company and Detroit Edison, FERC Electric Tariff No. 1. These Service Agreements are between Detroit Edison and NRG Power Marketing, Inc., dated as of August 31, 2000. The parties have not engaged in any transactions under the Service Agreements prior to thirty days to this filing.

Detroit Edison requests that the Service Agreements be made effective as rate schedules as of September 29, 2000.

Comment date: October 24, 2000, in accordance with Standard Paragraph E at the end of this notice.

15. The Detroit Edison Company

[Docket No. ER01–27–000]

Take notice that on October 3, 2000, The Detroit Edison Company (Detroit Edison) tendered for filing Service Agreements (Service Agreements) for Short-term Firm and Non-Firm Point-to-Point Transmission Service under the Joint Open Access Transmission Tariff of Consumers Energy Company and Detroit Edison, FERC Electric Tariff No. 1. These Service Agreements are between Detroit Edison and Coral Power, L.L.C., dated as of August 29, 2000. The parties have not engaged in any transactions under the Service Agreements prior to thirty days to this filing.

Detroit Edison requests that the Service Agreements be made effective as rate schedules as of September 29, 2000.

Comment date: October 24, 2000, in accordance with Standard Paragraph E at the end of this notice.

16. The Detroit Edison Company

[Docket No. ER01–28–000]

Take notice that on October 3, 2000, The Detroit Edison Company (Detroit Edison) tendered for filing a Service Agreement (Service Agreement) for Firm Point-to-Point Transmission Service under the Joint Open Access Transmission Tariff of Consumers Energy Company and Detroit Edison, FERC Electric Tariff No. 1. The Service Agreement is between Detroit Edison and Nordic Marketing, L.L.C., dated as of July 25, 2000. The parties have not engaged in any transactions under the Service Agreements prior to thirty days to this filing.

Detroit Edison requests that the Service Agreements be made effective as rate schedules as of August 25, 2000.

Comment date: October 24, 2000, in accordance with Standard Paragraph E at the end of this notice.

17. Xcel Energy Services, Inc.

[Docket No. ER01–29–000]

Take notice that on October 3, 2000, Xcel Energy Services, Inc. (XES), on behalf of Public Service Company of Colorado (Public Service), submitted for filing the Master Power Purchase and Sale Agreement between Public Service and Allegheny Energy Supply Company, LLC., which is an umbrella service agreement under Public Service's Rate Schedule for Market-Based Power Sales (Public Service FERC Electric Tariff, Original Volume No. 6).

XES requests that this agreement become effective on August 2, 2000.

Comment date: October 24, 2000, in accordance with Standard Paragraph E at the end of this notice.

18. Erie Boulevard Hydropower, L.P.

[Docket No. ER01–30–000]

Take notice that on October 3, 2000, Erie Boulevard Hydropower, L.P. (Erie) tendered for filing an executed Temporary Facility Usage Agreement dated July 10, 2000 between Erie and Niagara Mohawk Power Corporation (NMPC). This agreement has been executed for the purpose of permitting NMPC to use, at no cost, Erie's substation at Erie's School Street hydro project for the purpose of delivering, on a temporary basis, the output of 6 MW generating station recently acquired from Erie by the Green Island Power Authority.

Comment date: October 24, 2000, in accordance with Standard Paragraph E at the end of this notice.

19. USPowerEnergy, LLC

[Docket No. ER01–36–000]

Take notice that on October 3, 2000, USPowerEnergy, LLC (USPE) petitioned the Federal Energy Regulatory Commission (Commission) for acceptance of USPE Rate Schedule FERC No. 1; the granting of certain blanket approvals, including the authority to sell electricity at market-based rates; and the waiver of certain Commission regulations.

USPE intends to engage in wholesale electric power and energy purchases and sales as a marketer. USPE is not in the business of generating or transmitting electric power. USPE provides energy services primarily to commercial, institutional, and small industrial customers; and distributes energy efficiency equipment and supplies.

Comment date: October 24, 2000, in accordance with Standard Paragraph E at the end of this notice.

Standard Paragraphs

E. Any person desiring to be heard or to protest such filing should file a motion to intervene or protest with the Federal Energy Regulatory Commission, 888 First Street, NE., Washington, DC 20426, in accordance with Rules 211 and 214 of the Commission's Rules of

Practice and Procedure (18 CFR 385.211 and 385.214). All such motions or protests should be filed on or before the comment date. Protests will be considered by the Commission in determining the appropriate action to be taken, but will not serve to make protestants parties to the proceeding. Any person wishing to become a party must file a motion to intervene. Copies of these filings are on file with the Commission and are available for public inspection. This filing may also be viewed on the Internet at http://www.ferc.fed.us/online/rims.htm (call 202–208–2222 for assistance).

David P. Boergers,

Secretary.

[FR Doc. 00–26550 Filed 10–16–00; 8:45 am]

BILLING CODE 6717–01–P

ENVIRONMENTAL PROTECTION AGENCY

[FRL–6887–1]

Notice of Availability of Guidance for Controlling Nonpoint Source Pollution From Agriculture and Request for Comments

AGENCY: Environmental Protection Agency (EPA).

ACTION: Notice.

SUMMARY: EPA has developed and is requesting comments on draft technical guidance for managing agricultural sources of nonpoint pollution. This guidance is intended to provide technical assistance to State program managers and others on the best available, economically achievable means of reducing nonpoint source pollution of surface and ground water from agriculture. The guidance provides background information about agricultural nonpoint source pollution, where it comes from and how it enters the Nation's waters, discusses the broad concepts of assessing and addressing water quality problems on a watershed level, and presents up-to-date technical information about how to reduce agricultural nonpoint source pollution.

Reviewers should note that the draft technical guidance is entirely consistent with the Guidance Specifying Management Measures for Sources of Nonpoint Pollution in Coastal Waters, which EPA published in January 1993 under section 6217(g) of the Coastal Zone Act Reauthorization Amendments of 1990 (CZARA). The draft document does not supplant or replace the requirements of the 1993 document. It enhances the technical information contained in the 1993 coastal guidance to include inland as well as coastal context and to provide updated technical information based on current understanding and implementation of best management practices. It does not set new or additional standards for either CZARA section 6217 or Clean Water Act section 319 programs.

DATES: Written comments must be postmarked no later than January 16, 2001.

ADDRESSES: Comments may be addressed to Sharon Buck, Assessment and Watershed Protection Division (4503–F), U.S. Environmental Protection Agency, 1200 Pennsylvania Avenue, NW., Washington, DC 20460; or electronically mailed to buck.sharon@epa.gov.

FOR FURTHER INFORMATION CONTACT: Persons requesting additional information or a complete draft of the document should contact Sharon Buck at (202) 260–0306; buck.sharon@epa.gov; or U.S. Environmental Protection Agency (4503–F), 1200 Pennsylvania Avenue, NW., Washington, DC 20460. The complete text of the draft guidance is also available on EPA's Internet site on the Nonpoint Source Control Branch homepage <http://www.epa.gov/owow/nps/new.html>.

SUPPLEMENTARY INFORMATION:

I. Background

In recent years, State, territory, and tribal water quality assessments have identified nonpoint source (NPS) pollution as the most significant cause of degradation in surveyed waters nationwide. In 1987, Congress enacted section 319 of the Clean Water Act to establish a national program to control nonpoint sources of water pollution. Under Section 319, States, territories, and tribes address NPS pollution by assessing the NPS pollution problems within the state, territory, or tribal lands, identifying the sources of pollution, and implementing management programs to control the NPS pollution. Section 319 also authorizes EPA to award grants to States and tribes to assist them in implementing management programs which have been approved by EPA. Program implementation includes non-regulatory and regulatory programs, technical assistance, financial assistance, education, training, technology transfer, and demonstration projects. In fiscal year 2000, Congress appropriated and EPA awarded $200 million dollars for nonpoint source management program grants. EPA has awarded a total of $1 billion under Section 319 to States, Territories, and Indian tribes since 1990.

In 1993, under the authority of section 6217(g) of the Coastal Zone Act Reauthorization Amendments, EPA issued *Guidance Specifying Management Measures for Sources of Nonpoint Pollution in Coastal Waters* (EPA840-B–92–002). That guidance document details management measures appropriate for the control of five sources of nonpoint pollution in the coastal zone: agriculture, forestry, urban areas, marinas and recreational boating, and hydromodification. The document also includes management measures for wetlands, riparian areas, and vegetated treatment systems as they are important to the abatement of nonpoint source pollution in coastal waters. State and Territory Coastal Nonpoint Pollution Control Programs were required to adopt measures ''in conformity'' with the coastal management measures guidance.

The 1993 management measures guidance focused on conditions and examples of management measure implementation from the coastal zone. To date, technical guidance on the best available, economically achievable measures for controlling nonpoint sources with a national scope has not been released. The draft national management measures guidance is intended to address this gap. While the practices detailed in the 1993 guidance generally apply to inland areas, EPA has recognized the utility of developing and publishing a technical guidance document that explicitly addresses nonpoint source pollution on a nationwide basis. Moreover, additional data and examples from inland regions are available to enrich the national guidance. In addition, significant changes have occurred in sectors of the agriculture industry since 1993. These changes have helped to prompt the revision and expansion of the agriculture chapter of the 1993 guidance.

II. Scope of the Draft Guidance—Sources of Agricultural Nonpoint Pollution Addressed

The draft technical guidance continues to focus on the major sources of agricultural pollution identified in the 1993 coastal guidance by EPA in consultation with a number of other federal agencies and other leading national experts, including several experts from State land grant universities. Specifically, the guidance identifies management measures for the following:

1. Nutrients;
2. Pesticides;

3. Erosion and sediment;
4. Animal feeding operations;
5. Grazing; and
6. Irrigation water.

III. Approach Used To Develop Guidance

The draft national management measures guidance is based in large part on the 1993 coastal guidance. The 1993 coastal guidance was developed using a workgroup approach to draw upon technical expertise within other Federal agencies as well as State water quality and coastal zone management agencies.

The 1993 text has been expanded to include more background information on standard agricultural practices (*e.g.,* why farmers irrigate, history of pesticides) and to address emerging issues in agriculture (*e.g.,* precision farming). The draft guidance also incorporates examples and data from the inland regions of the United States (*e.g.,* grazing in Colorado) in addition to improving the coverage of unique coastal environments (*e.g.,* Hawaii). The document also updates information on technologies and the costs of management measures where new data has become available since the publication of the coastal guidance.

Only one of the management measures from the 1993 document has been altered in substance: the management measure for animal feeding operations. The coastal guidance contained a management measure whose implementation involved storing facility wastewater and runoff from confined animal facilities for all storms up to and including a 25-year, 24-hour storm and the management of stored runoff and accumulated solids through an appropriate waste utilization system for operations of more than 300 animal units. The management measure in the 1993 coastal guidance does not involve the implementation of manure storage structures or areas, only the control of runoff from such areas. The draft guidance recommends implementation of adequate manure storage in addition to the management of runoff, diversion of clean water, application of manure in accordance with a nutrient management plan, and protection of land receiving wastes through the use of other management measures (*i.e.,* grazing, irrigation water, erosion control), as appropriate. Recent concern over the management of wastes from animal feeding operations, changes in standard practice within the livestock industry, the enactment and promulgation of many new State laws and regulations throughout the country, and the recent publication of the joint U.S. Department of Agriculture/U.S. Environmental Protection Agency Unified National Strategy for Animal Feeding Operations (March 1999) prompted the alterations to the management measure for animal feeding operations described above.

IV. Request for Comments

EPA is soliciting comments on the draft guidance on management measures to control agricultural sources of nonpoint pollution. The Agency is soliciting additional information and supporting data on the measures specified in this guidance and on additional measures that may be as effective or more effective in controlling nonpoint source pollution from agriculture.

Dated: October 5, 2000.

J. Charles Fox,

Assistant Administrator, Office of Water.

[FR Doc. 00–26637 Filed 10–16–00; 8:45 am]

BILLING CODE 6560–50–P

ENVIRONMENTAL PROTECTION AGENCY

[OPPTS–51953; FRL–6749–3]

Certain New Chemicals; Receipt and Status Information

AGENCY: Environmental Protection Agency (EPA).

ACTION: Notice.

SUMMARY: Section 5 of the Toxic Substances Control Act (TSCA) requires any person who intends to manufacture (defined by statute to include import) a new chemical (i.e., a chemical not on the TSCA Inventory) to notify EPA and comply with the statutory provisions pertaining to the manufacture of new chemicals. Under sections 5(d)(2) and 5(d)(3) of TSCA, EPA is required to publish a notice of receipt of a premanufacture notice (PMN) or an application for a test marketing exemption (TME), and to publish periodic status reports on the chemicals under review and the receipt of notices of commencement to manufacture those chemicals. This status report, which covers the period from August 28, 2000 to September 8, 2000, consists of the PMNs and TMEs, both pending or expired, and the notices of commencement to manufacture a new chemical that the Agency has received under TSCA section 5 during this time period.

ADDRESSES: Comments may be submitted by mail, electronically, or in person. Please follow the detailed instructions for each method as provided in Unit I. of the **SUPPLEMENTARY INFORMATION.** To ensure proper receipt by EPA, it is imperative that you identify docket control number OPPTS–51953 and the specific PMN number in the subject line on the first page of your response.

FOR FURTHER INFORMATION CONTACT: Barbara Cunningham, Director, Office of Program Management and Evaluation, Office of Pollution Prevention and Toxics (7401), Environmental Protection Agency, 1200 Pennsylvania Ave., NW., Washington, DC 20460; telephone number: (202) 554–1404; e-mail address: TSCA-Hotline@epa.gov.

SUPPLEMENTARY INFORMATION:

I. General Information

A. Does this Action Apply to Me?

This action is directed to the public in general. As such, the Agency has not attempted to describe the specific entities that this action may apply to. Although others may be affected, this action applies directly to the submitter of the premanufacture notices addressed in the action. If you have any questions regarding the applicability of this action to a particular entity, consult the person listed under **FOR FURTHER INFORMATION CONTACT.**

B. How Can I Get Additional Information, Including copies of this Document and Other Related Documents?

1. *Electronically.* You may obtain copies of this document and certain other available documents from the EPA Internet Home Page at http://www.epa.gov/. On the Home Page select ''Laws and Regulations,'' ''Regulations and Proposed Rules,'' and then look up the entry for this document under the ''**Federal Register**—Environmental Documents.'' You can also go directly to the **Federal Register** listings at http://www.epa.gov/fedrgstr/.

2. *In person.* The Agency has established an official record for this action under docket control number OPPTS–51953. The official record consists of the documents specifically referenced in this action, any public comments received during an applicable comment period, and other information related to this action, including any information claimed as confidential business information (CBI). This official record includes the documents that are physically located in the docket, as well as the documents that are referenced in those documents. The public version of the official record does not include any information claimed as CBI. The public version of the official record, which includes printed, paper versions of any electronic comments submitted during an applicable comment period, is

available for inspection in the TSCA NonConfidential Information Center, North East Mall Rm. B–607, Waterside Mall, 401 M St., SW., Washington, DC. The center is open from noon to 4 p.m., Monday through Friday, excluding legal holidays. The telephone number of the center is (202) 260–7099.

C. How and to Whom Do I Submit Comments?

You may submit comments through the mail, in person, or electronically. To ensure proper receipt by EPA, it is imperative that you identify docket control number OPPTS–51953 and the specific PMN number in the subject line on the first page of your response.

1. *By mail.* Submit your comments to: Document Control OffiCe (7407), Office of Pollution Prevention and Toxics (OPPT), Environmental Protection Agency, 1200 Pennsylvania Ave., NW., Washington, DC 20460.

2. *In person or by courier.* Deliver your comments to: OPPT Document Control Office (DCO) in East Tower Rm. G–099, Waterside Mall, 401 M St., SW., Washington, DC. The DCO is open from 8 a.m. to 4 p.m., Monday through Friday, excluding legal holidays. The telephone number for the DCO is (202) 260–7093.

3. *Electronically.* You may submit your comments electronically by e-mail to: ''oppt.ncic@epa.gov,'' or mail your computer disk to the address identified in this unit. Do not submit any information electronically that you consider to be CBI. Electronic Comments must be submitted as an ASCII file avoiding the use of special characters and any form of encryption. Comments and data will also be accepted on standard disks in WordPerfect 6.1/8.0 or ASCII file format. All comments in electronic form must be identified by docket control number OPPTS–51953 and the specific PMN number. Electronic comments may also be filed online at many Federal Depository Libraries.

D. How Should I Handle CBI that I Want to Submit to the Agency?

Do not submit any information electronically that you consider to be CBI. You may claim information that you submit to EPA in response to this document as CBI by marking any part or all of that information as CBI. Information so marked will not be disclosed except in accordance with procedures set forth in 40 CFR part 2. In addition to one complete version of the comment that includes any information claimed as CBI, a copy of the comment that does not contain the information claimed as CBI must be submitted for inclusion in the public version of the official record. Information not marked confidential will be included in the public version of the official record without prior notice. If you have any questions about CBI or the procedures for claiming CBI, please consult the person listed under **FOR FURTHER INFORMATION CONTACT**.

E. What Should I consider as I Prepare My Comments for EPA?

You may find the following suggestions helpful for preparing your comments:

1. Explain your views as clearly as possible.
2. Describe any assumptions that you used.
3. Provide copies of any technical information and/or data you used that support your views.
4. If you estimate potential burden or costs, explain how you arrived at the estimate that you provide.
5. Provide specific examples to illustrate your concerns.
6. Offer alternative ways to improve the notice or collection activity.
7. Make sure to submit your comments by the deadline in this document.
8. To ensure proper receipt by EPA, be sure to identify the docket control number assigned to this action in the subject line on the first page of your response. You may also provide the name, date, and **Federal Register** citation.

II. Why is EPA Taking this Action?

Section 5 of TSCA requires any person who intends to manufacture (defined by statute to include import) a new chemical (i.e., a chemical not on the TSCA Inventory to notify EPA and comply with the statutory provisions pertaining to the manufacture of new chemicals. Under sections 5(d)(2) and 5(d)(3) of TSCA, EPA is required to publish a notice of receipt of a PMN or an application for a TME and to publish periodic status reports on the chemicals under review and the receipt of notices of commencement to manufacture those chemicals. This status report, which covers the period from August 28, 2000 to September 8, 2000, consists of the PMNs and TMEs, both pending or expired, and the notices of commencement to manufacture a new chemical that the Agency has received under TSCA section 5 during this time period.

III. Receipt and Status Report for PMNs

This status report identifies the PMNs and TMEs, both pending or expired, and the notices of commencement to manufacture a new chemical that the Agency has received under TSCA section 5 during this time period. If you are interested in information that is not included in the following tables, you may contact EPA as described in Unit II. to access additional non-CBI information that may be available.

In table I, EPA provides the following information (to the extent that such information is not claimed as CBI) on the PMNs received by EPA during this period: the EPA case number assigned to the PMN; the date the PMN was received by EPA; the projected end date for EPA's review of the PMN; the submitting manufacturer; the potential uses identified by the manufacturer in the PMN; and the chemical identity.

I. 29 PREMANUFACTURE NOTICES RECEIVED FROM: 08/25/00 TO 09/08/00

Case No.	Received Date	Projected Notice End Date	Manufacturer/Importer	Use	Chemical
P–00–1150	08/28/00	11/26/00	Eastman Chemical Company	(S) Raw materials for hot-melt adhesives	(G) Poly(ester-ether)
P–00–1151	08/28/00	11/26/00	Eastman Chemical Company	(S) Raw materials for hot-melt adhesives	(G) Poly(ester-ether)
P–00–1152	08/28/00	11/26/00	CBI	(G) Component of coating with open use	(G) Ketimine
P–00–1153	08/28/00	11/26/00	CBI	(G) Component of coating with open use	(G) Ketimine
P–00–1154	08/28/00	11/26/00	CBI	(G) Component of coating with open use	(G) Ketimine

I. 29 PREMANUFACTURE NOTICES RECEIVED FROM: 08/25/00 TO 09/08/00—Continued

Case No.	Received Date	Projected Notice End Date	Manufacturer/Importer	Use	Chemical
P–00–1155	08/28/00	11/26/00	CBI	(G) Component of coating with open use	(G) Ketimine
P–00–1156	08/28/00	11/26/00	CBI	(G) Component of coating with open use	(G) Amino functional polymer
P–00–1157	08/28/00	11/26/00	CBI	(G) Component of coating with open use	(G) Amino functional polymer
P–00–1158	08/28/00	11/26/00	CBI	(G) Component of coating with open use	(G) Amino functional polymer
P–00–1159	08/28/00	11/26/00	CBI	(G) Component of coating with open use	(G) Amino functional polymer
P–00–1160	08/29/00	11/27/00	CBI	(G) Polymeric binder	(G) Styrene-methacrylate copolymer
P–00–1161	08/31/00	11/29/00	CBI	(G) Open, non-dispersive (resin)	(G) Polyether acrylate
P–00–1162	08/31/00	11/29/00	CBI	(G) Rubber additive	(G) Metallic methacrylate
P–00–1163	08/31/00	11/29/00	Vantico Inc., North America	(S) Hardener for epoxy dielectric insulation;hardener for pipe bonding	(S) Oxiranemethanamine, *n,n′*-(methylenedi-4,1-phenylene)bis[*n*-(oxiranylmethyl)-, polymer with 4,4′-methylenebis[2-methylcyclohexanamine]*
P–00–1164	08/31/00	11/29/00	Warner-Jenkinson Co., Inc.	(S) Technical dye	(S) 1h-pyrazole-3-Carboxylic acid, 4,5-dihydro-5oxo-1-(4-sulfoophenyl)-=4-[(sulfophenyl)azo]-, compd. with 2-aminoethanol*
P–00–1165	08/31/00	11/29/00	CBI	(G) Surface active agent	(G) Fluoropolyether derivative
P–00–1166	09/01/00	11/30/00	BASF Corporation	(S) Processing aid for leather finishing	(G) Aromatic silicone derivative, compds with aromatic amine
P–00–1167	09/01/00	11/30/00	CBI	(G) Coating component	(G) Acrylic solution polymer
P–00–1168	09/01/00	11/30/00	CBI	(G) Raw material; processing aid	(G) Alkanepolyol monoether
P–00–1169	09/01/00	11/30/00	CBI	(G) Raw material; processing aid	(G) Alkanepolyol diether
P–00–1170	09/05/00	12/04/00	NICCA U.S.A., Inc.	(S) Monomer for nylon dye fix	(S) Phenol, 4,4′-sulfonylbis-, monosodium salt*
P–00–1171	09/05/00	12/04/00	The Dow Chemical Company	(G) Thermoplastic parts	(G) Hydrogenated polymer
P–00–1172	09/05/00	12/04/00	CBI	(G) Intermediate for solvent based coatings	(G) Polyurethane polymer
P–00–1173	09/01/00	11/30/00	Dow Corning Corporation	(S) Adhesion promoter	(G) Bis[(alkoxysilyl)alkyl]polysulfide
P–00–1174	09/01/00	11/30/00	Dow Corning Corporation	(S) Adhesion promoter	(G) Bis[(alkoxysilyl)alkyl]polysulfide
P–00–1175	09/07/00	12/06/00	CBI	(G) Component of coating with open use	(G) Aliphatic polyurea
P–00–1176	09/08/00	12/07/00	CBI	(S) Polyol for polyurethane manufacture	(G) Polyester polyol
P–00–1177	09/08/00	12/07/00	CBI	(S) Intermediate for polyurethane manufacture	(G) Functionalized polyether
P–00–1178	09/08/00	12/07/00	CBI	(G) Open, non-dispersive (resin)	(G) Aliphatic polyisocyanate

In table II, EPA provides the following information (to the extent that such information is not claimed as CBI) on the TMEs received:

II. 1 TEST MARKETING EXEMPTION NOTICES RECEIVED FROM: 08/28/00 TO 09/08/00

Case No.	Received Date	Projected Notice End Date	Manufacturer/Importer	Use	Chemical
T–00–0006	09/05/00	10/20/00	CBI	(S) As an ingredient in a new human antipersoirant formulation	(G) Alkyl epoxide

In table III, EPA provides the following information (to the extent that such information is not claimed as CBI) on the Notices of Commencement to manufacture received:

III. 36 NOTICES OF COMMENCEMENT FROM: 08/28/00 TO 09/08/00

Case No.	Received Date	Commencement/ Import Date	Chemical
P–00–0194	08/28/00	08/15/00	(G) Amine functional acrylic polymer
P–00–0308	08/29/00	08/07/00	(S) Hexanedioic acid, polymer with 2,2-dimethyl-1,3-propanediol, 2-ethyl-2-(hydroxymethyl)-1,3-propanediol, 1,6-hexanediol, 3-hydroxy-2-(hydroxymethyl)-2-methylpropanoic acid, 1,1′-methylenebis[4-isocyanatoyclohexane] and 2-methyl-1,5-pentanediamine, compd. with *n,n*-diethylethanamine*
P–00–0318	09/05/00	08/15/00	(G) Cuprate(6-), [2-[[[[3-[[4-fluoro-6-[[2-[[4-fluoro-6-[[4-[(sulfonated alkyl) azo]phenyl] amino]-1,3,5-triazin-2-yl]amino]-1-methylethyl]amino]-1,3,5-triazin-2-yl] amino]-2-(hydroxy-.kappa.0)-5-sulfophenyl]azo-.kappa.n2] phenylmethyl] azo-.kappa.n1]-4-sulfobenzoate(8-)]-, potassium sodium*
P–00–0340	08/28/00	08/12/00	(S) 2-propenoic acid, 2-methyl-, 2-hydroxyethyl ester, polymer with ethene, ethenyl acetate and 2-ethylhexyl 2-propenoate*
P–00–0358	09/05/00	08/04/00	(G) Triphenylamine derivative
P–00–0364	08/28/00	07/28/00	(G) Copper complex of (substituted sulfonaphthyl azo substituted phenyl) disulfonaphthyl azo, amine salt
P–00–0365	08/28/00	07/28/00	(G) Copper complex of (substituted sulfonaphthyl azo substituted phenyl) disulfonaphthyl azo, salt
P–00–0379	09/06/00	07/29/00	(G) Blocked polyurethane resin, amine salt
P–00–0448	09/08/00	08/11/00	(G) Titanium-aluminum complex on amorphous silica
P–00–0454	08/28/00	08/10/00	(G) Acrylate copolymer
P–00–0470	08/30/00	08/17/00	(G) Polyurethane
P–00–0477	08/29/00	08/15/00	(G) Fatty acids, tall-oil, polymers with 5-amino-1,3,3-trimethylcyclohexanemethanamine, dicarboxylic acid, fumarated rosin and pentaerythritol
P–00–0490	09/01/00	08/10/00	(G) Substituted acrylamides copolymer
P–00–0529	08/31/00	07/29/00	(G) Terpolyamide or copolyamide
P–00–0542	09/06/00	08/09/00	(G) Modified phenol formaldehyde resin
P–00–0559	08/28/00	06/02/00	(G) Solvent blue 43
P–00–0637	08/30/00	08/09/00	(G) Substituted alkyl salt of halogentated organoborate
P–00–0638	08/30/00	08/03/00	(G) Alkali metal salt of halogenated organoborate
P–00–0782	08/30/00	08/23/00	(G) Fatty acid polymer with alkyl diols, isocyanic acid, ester, alkoxylated polyether diolsulfonate, 2-oxepanone and alkyl diamine
P–95–1213	09/07/00	05/12/00	(G) Hydroxy terminated polyester
P–97–0296	09/05/00	08/02/00	(G) Alkyl benzene sulfonic acids, amine salts
P–97–0299	09/05/00	08/01/00	(G) Alkyl ether sulfates, amine salts
P–97–0441	08/28/00	07/26/00	(S) Fatty acids, tall-oil, reaction products with bisphenol a, bu glycidyl ether, epichlohydrin and triethlenetetramine*
P–98–0052	08/30/00	07/27/00	(G) Metal phenate-sulfonate complex
P–98–0961	08/29/00	08/19/00	(S) Hexadecanol, branched*
P–98–0962	08/29/00	08/19/00	(S) Heptadecanol, branched*
P–99–0561	09/07/00	11/03/99	(G) Hydroxyl terminated polyester
P–99–1050	09/05/00	07/24/00	(G) 1,7-naphthalenedisulfonic acid, 2-[[substituted-1,3,5-triazin-2-yl]amino]-5-hydroxy-6-substituted-, salt
P–99–1098	09/06/00	08/02/00	(G) Hydroxyfunctional acrylic copolymer with ethanol, 2-(dimethylamino)-
P–99–1166	09/05/00	08/25/00	(G) Stilbene disulfonic acid triazine derivative
P–99–1310	08/28/00	08/03/00	(G) Polyol
P–99–1328	09/06/00	08/02/00	(G) Modified melamine resin
P–99–1368	09/05/00	08/11/00	(G) Alpha olefin - maleic anhydride copolymer, alkyl esters

List of Subjects

Environmental Protection, Chemicals, Premanufacturer notices.

Dated:September 21, 2000.

Deborah A. Williams,

Director, Information Management Division, Office of Pollution Prevention and Toxics.

[FR Doc. 00–26640 Filed 10–16–00; 8:45 am]

BILLING CODE 6560–50–S

FEDERAL COMMUNICATIONS COMMISSION

Notice of Public Information Collection(s) Being Submitted to OMB for Review and Approval

October 3, 2000.

SUMMARY: The Federal Communications Commission, as part of its continuing effort to reduce paperwork burden invites the general public and other Federal agencies to take this opportunity to comment on the following information collection, as required by the Paperwork Reduction Act of 1995, Public Law 104–13. An agency may not conduct or sponsor a collection of information unless it displays a currently valid control number. No person shall be subject to any penalty for failing to comply with a collection of information subject to the Paperwork Reduction Act (PRA) that does not display a valid control number. Comments are requested concerning (a) whether the proposed collection of information is necessary for the proper performance of the functions of the Commission, including whether the information shall have practical utility; (b) the accuracy of the Commission's burden estimate; (c) ways to enhance the quality, utility, and clarity of the information collected; and (d) ways to minimize the burden of the collection of

information on the respondents, including the use of automated collection techniques or other forms of information technology.

DATES: Written comments should be submitted on or before November 16, 2000. If you anticipate that you will be submitting comments, but find it difficult to do so within the period of time allowed by this notice, you should advise the contact listed below as soon as possible.

ADDRESSES: Direct all comments to Les Smith, Federal Communications Commission, Room 1–A804, 445 12th Street, SW., Washington, DC 20554 or via the Internet to *lesmith@fcc.gov.*

FOR FURTHER INFORMATION CONTACT: For additional information or copies of the information collections contact Les Smith at (202) 418–0217 or via the Internet at *lesmith@fcc.gov.*

SUPPLEMENTARY INFORMATION:

OMB Control Number: 3060–0816.

Title: Local Competition and Broadband Reporting, CC Docket No. 99–301.

Form Number: FCC Report 477.

Type of Review: Extension of a currently approved collection.

Respondents: Business or other for-profit entities.

Number of Respondents: 255.

Estimate Time Per Response: 58.67 hours (avg.).

Frequency of Response: Semi-annual reporting requirement.

Total Annual Burden: 29,924 hours.

Total Annual Costs: None.

Needs and Uses: The FCC Form 477 seeks to gather information on the development of local competition and deployment of broadband service also known as advanced telecommunications services. The data are necessary to evaluate the status of developing competition in local exchange telecommunications markets and to evaluate the status of broadband deployment. The Commission staff uses the information to advise the Commission about the efficacy of the FCC rules and policies adopted to implement the Telecommunications Act of 1996.

OMB Control Number: 3060–XXXX.

Title: Notification of Emergency Alert System Status.

Form Number: N/A.

Type of Review: New collection.

Respondents: Business or other for-profit entities; Not-for-profit institutions; and State, local, or tribal government.

Number of Respondents: 125.

Estimate Time Per Response: 30 minutes.

Frequency of Response: On occasion reporting requirement.

Total Annual Burden: 62 hours.

Total Annual Costs: None.

Needs and Uses: Due to the state's size, remoteness, and isolation, it is difficult for the resident agent of the FCC's Alaska office to make on-the-scene inspections to insure that the FM translators are in compliance with the Emergency Alert System (EAS) rules adopted on January 1, 1997. The agent is, therefore, developing a survey to determine whether the FM translators are either rebroadcasting local programming in their entirety, including the EAS warnings, or, if not, then whether the FM translator station has EAS equipment installed and working properly. FM translator stations that are not in compliance could present a safety-of-life issue to the listening public.

Federal Communications Commission.

Magalie Roman Salas,

Secretary.

[FR Doc. 00–26598 Filed 10–16–00; 8:45 am]

BILLING CODE 6712–01–P

FEDERAL COMMUNICATIONS COMMISSION

[CC Docket No. 96–45; FCC 00J–3]

Federal-State Joint Board on Universal Service Seeks Comment on Rural Task Force Recommendation

AGENCY: Federal Communications Commission.

ACTION: Notice; solicitation of comments.

SUMMARY: In a Public Notice in this proceeding released on October 4, 2000, the Federal-State Joint Board on Universal Service sought comment on the Rural Task Force recommendation for universal service reform for rural carriers.

DATES: Submit comments on or before November 3, 2000 and reply comments on or before November 30, 2000.

ADDRESSES: See Supplementary Information section for where and how to file comments.

FOR FURTHER INFORMATION CONTACT: Gene Fullano (202) 418–7400 TTY: (202) 418–0484.

SUPPLEMENTARY INFORMATION: In the May 1997 *Universal Service Order,* 62 FR 32862 (June 17, 1997), the Commission, acting on the recommendation of the Federal-State Joint Board on Universal Service (the Joint Board), encouraged the Joint Board to establish a Rural Task Force to ''provide valuable assistance in identifying the issues unique to rural carriers and analyzing the appropriateness of proxy cost models for rural carriers.'' On September 17, 1997, the Joint Board announced the creation of the Rural Task Force and directed it to present a report to the Joint Board making specific recommendations on the establishment of a forward-looking economic cost mechanism for rural telephone companies. The Joint Board will consider this report in formulating a recommendation to the Commission for universal service reform for rural carriers.

On September 29, 2000, the Rural Task Force submitted the Rural Task Force Recommendation To The Federal-State Joint Board On Universal Service. This recommendation, as well as supporting materials, are available on the Joint Board's Web page at *http://www.fcc.gov/ccb/universal service/joint.html* and the Rural Task Force's Web site at *http://www.wutc.wa.gov/rtf.* Consistent with the procedures outlined below, the Joint Board seeks comment on the recommendation.

Pursuant to sections 1.415 and 1.419 of the Commission's rules, 47 CFR 1.415, 1.419, interested parties may file comments on or before November 3, 2000, and reply comments on or before November 30, 2000. All filings should reference *Federal-State Joint Board On Universal Service,* CC Docket No. 96–45, *Comments on the Rural Task Force Recommendation* and should include the FCC number shown on this Public Notice. Comments may be filed using the Commission's Electronic Comment Filing System (ECFS) or by filing paper copies. *See Electronic Filing of Documents in Rulemaking Proceedings,* 63 FR 24121 (1998). Comments filed through the ECFS can be sent as an electronic file via the Internet to <http://www.fcc.gov/e-file/ecfs.html>. Generally, only one copy of an electronic submission must be filed. If multiple docket or rulemaking numbers appear in the caption of this proceeding, however, commenters must transmit one electronic copy of the comments to each docket or rulemaking number referenced in the caption. In completing the transmittal screen, commenters should include their full name, Postal Service mailing address, and the applicable docket or rulemaking number. Parties may also submit electronic comments by Internet e-mail. To receive filing instructions for e-mail comments, commenters should send an e-mail to ecfs@fcc.gov, and should include the following words in the body of the message, ''get form <your e-mail address>.'' A sample form and directions will be sent in reply. Parties who choose to file by paper must file an

original and four copies of each filing. If more than one docket or rulemaking number appears in the caption of this proceeding, commenters must submit two additional copies for each additional docket or rulemaking number. All filings must be sent to the Commission's Secretary, Magalie Roman Salas, Office of the Secretary, Federal Communications Commission, 445 12th Street, SW., Washington, DC 20554.

Parties should also send three paper copies of their filing to Sheryl Todd, Accounting Policy Division, Common Carrier Bureau, Federal Communications Commission, 445 Twelfth Street SW., Room 5–B540, Washington, DC 20554 and to the individuals listed on the attached service list. In addition, commenters must send diskette copies to the Commission's copy contractor, International Transcription Service, Inc., 1231 20th Street, NW., Washington, DC 20037.

Dated: October 11, 2000.

Magalie Roman Salas,

Secretary.

Service List

The Honorable Susan Ness, Commissioner, FCC Joint Board Chair, Federal Communications Commission, 445 12th Street, SW, Rm. 8–B115H, Washington, DC 20554

The Honorable Harold Furchtgott-Roth, Commissioner, Federal Communications Commission 445 12th Street, S.W., Rm. 8–B115H, Washington, DC 20554

The Honorable Gloria Tristani, Commissioner, Federal Communications Commission, 445 12th Street, S.W., Rm. 8–B115H, Washington, DC 20554

The Honorable Laska Schoenfelder, Commissioner, State Joint Board Chair, South Dakota Public Utilities Commission, State Capitol, 500 East Capitol Street, Pierre, SD 57501–5070

The Honorable Martha Hogerty, Public Counsel, Missouri Office of Public Counsel, 301 West High St., Suite 250, Truman Building, P.O. Box 7800, Jefferson City, MO 65102

The Honorable Bob Rowe, Commissioner, Montana Public Service Commission, 1701 Prospect Avenue, P.O. Box 202601, Helena, MT 59620–2601

The Honorable Patrick H.Wood, III, Chairman, Texas Public Utility Commission, 1701 North Congress Avenue, P.O. Box 13326, Austin, TX 78711–3326

The Honorable Nanette G. Thompson, Chair, Regulatory Commission of Alaska 1016 West Sixth Avenue, Suite 400, Anchorage, AK 99501–1693

Rowland Curry, Chief Engineer, Texas Public Utility Commission, 1701 North Congress Avenue, P.O. Box 13326, Austin, TX 78701–3326

Greg Fogleman, Economic Analyst, Florida Public Service Commission, 2540 Shumard Oak Blvd., Gerald Gunter Bldg., Tallahassee, FL 32399–0850

Mary E.Newmeyer, Federal Affairs Advisor, Alabama Public Service Commission, 100 N. Union Street, Ste. 800, Montgomery, AL 36104

Joel Shifman, Senior Advisor, Maine Public Utilities Commission, 242 State Street, State House Station 18, Augusta ME 04333–0018

Peter Bluhm, Director of Policy Research, Vermont Public Service Board, Drawer 20, 112 State St., 4th Floor, Montpielier, VT 05620–2701

Charlie Bolle, Policy Advisor, Nevada Public Utilities Commission, 1150 E. Williams Street, Carson City, NV 89701–3105

Carl Johnson, Telecom Policy Analyst, New York Public Service Commission, 3 Empire State Plaza, Albany, NY 12223–1350

Lori Kenyon, Common Carrier Specialist, Regulatory Commission of Alaska, 1016 West 6th Ave, Suite 400, Anchorage, AK 99501

Susan Stevens Miller, Assistant General Counsel, Maryland Public Service Commission, 16th Floor, 6 Paul Street, Baltimore, MD 21202–6806

Tom Wilson, Economist, Washington Utilities & Transportation Commission, 1300 Evergreen Park Drive, S.W., P.O. Box 47250, Olympia, WA 98504–7250

Philip McClelland, Senior Assistant Consumer Advocate, PA Office of Consumer Advocate, 555 Walnut Street, Forum Place, 5th Floor, Harrisburg, PA 17101–1923

Barbara Meisenheimer, Consumer Advocate, Missouri Office of Public Counsel, 301 West High St., Suite 250, Truman Building, P.O. Box 7800, Jefferson City, MO 65102

Earl Poucher, Legislative Analyst, Office of the Public Counsel, 111 West Madison, Rm. 812, Tallahassee, FL 32399–1400

Ann Dean, Assistant Director, Maryland Public Service Commission, 16th Floor, 6 Paul Street, Baltimore, MD 21202–6806

David Dowds, Public Utilities Supervisor, Florida Public Service Commission, 2540 Shumard Oaks Blvd., Gerald Gunter Bldg., Tallahassee, FL 32399–0850

[FR Doc. 00–26599 Filed 10–16–00; 8:45 am]

BILLING CODE 6712–01–P

FEDERAL COMMUNICATIONS COMMISSION

[Report No. AUC–36–C (Auction No. 36); DA 00–2260]

Auction of Licenses for 800 MHz Specialized Mobile Radio (SMR) Service Frequencies in the Lower 80 Channels; Status of FCC Form 175 Applications To Participate in the Auction

AGENCY: Federal Communications Commission.

ACTION: Notice.

SUMMARY: This document announces 20 applicants whose short-form auction applications for the 800 MHz SMR Auction (Auction No. 36) are accepted for filing and instructs those applicants on upfront payment information, bidding software and other pertinent information in reference to the auction. Also, this document identifies the 19 incomplete applicants and 1 rejected applicant reported for this auction.

DATES: Auction No. 36 is scheduled to begin on Wednesday, November 1, 2000.

FOR FURTHER INFORMATION CONTACT: M. Nicole Oden, Auctions Legal Branch at (202) 418–0660 (regarding legal questions); Linda Sanderson, Auctions Operations (regarding bidding and general filing status) at (717) 338–2888. For questions about payment or instructions for wiring upfront payments, contact Gail Glasser or Tim Dates, Auctions Accounting Group, at (202) 418–1995.

SUPPLEMENTARY INFORMATION: This is a summary of a public notice released October 6, 2000 (''Auction No. 36 Public Notice''). The complete text of the ''*Auction No. 36 Public Notice,*'' including all attachments, is available for inspection and copying during normal business hours in the FCC Reference Center (Room CY–A257), 445 12th Street, SW, Washington, DC. It may also be purchased from the Commission's copy contractor, International Transcription Services, Inc., (ITS, Inc.) 1231 20th Street, NW, Washington, DC 20036, (202) 857–3800. It is also available on the Commission's website at *http://www.fcc.gov/wtb/auctions.* List of Attachments available at the FCC:

Attachment A—List of Accepted Applicants

Attachment B—List of Incomplete Applicants

Attachment C—List of Rejected Applicants

1. The Federal Communications Commission (''FCC'') has received 40

FCC Form 175 applications to participate in Auction No. 36 scheduled to begin on Wednesday, November 1, 2000, for 2,800 licenses in the 800 MHz Band. The applications have been reviewed for completeness and compliance with the Commission's rules, and have been classified into the following categories:

Accepted for Filing: 20 Applications.

Incomplete: 19 Applications.

Rejected: 1 Application.

Accepted: Applications accepted for filing are listed alphabetically in Attachment A of the *Auction No. 36 Public Notice.* These applicants will become qualified bidders upon receipt of the required upfront payment due by 6:00 p.m. ET on Monday, October 16, 2000. *See* 47 CFR 1.2106. With respect to the FCC Form 175 applications, these applicants need take no further action except as may be necessary to maintain the accuracy of their applications. *See* 47 CFR 1.65. Also, applicants are advised that Attachment A includes FCC account numbers that were automatically created by the FCC software system for each applicant, and which are applicable for bidding only.

Incomplete: Applications found to be incomplete are listed alphabetically in Attachment B of the *Auction No. 36 Public Notice.* Applicants whose FCC Form 175 applications have been deemed incomplete will receive overnight correspondence indicating what information is required to make the applications acceptable for filing. These applicants may become qualified bidders only if they: (i) Resubmit their applications by 6:00 p.m. ET on Monday, October 16, 2000, to correct the minor deficiencies indicated; and (ii) make the required upfront payments by 6:00 p.m. ET on Monday, October 16, 2000. Applicants must also maintain the accuracy of their FCC Form 175 applications as required by the Commission's rules. In addition, applicants are advised that Attachment B includes FCC account numbers that were automatically created by the FCC software system for each applicant. These account numbers are applicable for bidding purposes only, should the applicant become eligible to participate in Auction No. 36.

2. The filing window for resubmitting FCC Form 175 applications is now open. Corrected applications must be filed no later than 6:00 p.m. ET on Monday, October 16, 2000. This will be the only opportunity to cure FCC Form 175 defects; late resubmissions will not be accepted. In addition, if an application remains incomplete or otherwise deficient after the resubmission deadline has passed, the application will be rejected.

Rejected: The application(s) classified as rejected are listed in Attachment C. Applicants whose applications have been rejected are disqualified from participation in Auction No. 36.

Upfront Payment Deadline

3. Upfront payments and accompanying FCC Remittance Advice (FCC Form 159) for Auction No. 36 are due and must be received at Mellon Bank, Pittsburgh, Pennsylvania, no later than 6:00 p.m. ET on Monday, October 16, 2000. Payments must be made by wire transfer and applicants must include their Taxpayer Identification Numbers (TIN). No other payment method is acceptable for this auction. Applicants are reminded to use their TIN and not their FCC Account Numbers on the FCC Remittance Advice (FCC Form 159).

4. Applicants that have filed applications deemed to be incomplete, as noted in this public notice, must submit timely and sufficient upfront payments before the Commission will review their resubmitted applications. If such an application remains incomplete following its resubmission, the application will be dismissed. If the applicant has provided its Taxpayer Identification Number (TIN) and wire transfer instructions, the upfront payment will be refunded automatically.

Other Important Information

5. *Qualified Bidders:* Approximately one week after upfront payments have been received, resubmitted FCC Form 175 applications have been processed and reviewed, and the correlation of payments and applications have been made, a public notice listing all applicants qualified to bid in the auction will be released. The same public notice will also include instructions on how to access the auction tracking tool software, a bidding schedule for the Mock auction, and the bidding schedule for the first day of the auction.

6. *Prohibition of Collusion:* Bidders are reminded that § 1.2105(c) of the Commission's Rules prohibits applicants for the same geographic license area from communicating with each other during the auction about bids, bidding strategies, or settlements unless they have identified each other as parties with whom they have entered into agreements under § 1.2105(a)(2)(viii). For Auction No. 36, this prohibition became effective at the filing deadline of short-form applications on Friday, September 29, 2000, and will end on the post-auction down payment due date. The post-auction down payment due date will be announced in a future public notice. If parties had agreed in principle on all material terms, those parties must have been identified on the short-form application under § 1.2105(c), even if the agreement had not been reduced to writing. If parties had not agreed in principle by the filing deadline, an applicant should not have included the names of those parties on its application, and must not have continued negotiations with other applicants for licenses in the same geographic area. For further details regarding the prohibition against collusion, refer to the *Auction No. 36 Public Notice.*

7. In addition, applicants are reminded that they are subject to the antitrust laws, which are designed to prevent anti-competitive behavior in the marketplace. Winning bidders will be required to disclose in their long-form applications the specific terms, conditions and parties involved in all bidding consortia, joint ventures, partnerships, and other arrangements entered into relating to the competitive bidding process. Bidders found to have violated the anti-collusion rule may be subject to sanctions.

8. *Ex Parte Rule:* Applicants should also be aware that the Commission has generally exempted auction proceedings from the strict requirements of the *ex parte* rule found in 1.2106 of the Commission's rules.

9. *Mock Auction:* All applicants found to be qualified bidders are eligible to participate in a mock electronic auction on Monday, October 30, 2000. In the *Qualified Bidders Public Notice,* the Bureau will announce when software for the mock auction will be posted on the World Wide Web.

10. *Remote Bidding Software:* Applicants are reminded that qualified bidders are eligible to bid either electronically or telephonically. To bid electronically, applicants should complete the software order form included in the *Auction No. 36 Public Notice,* or contact the Auctions Hotline at (717) 338–2888. To ensure timely delivery of remote bidding software before the auction begins, the Commission requests receipt of software orders by 6:00 p.m. ET on Tuesday, October 17, 2000. The minimum hardware and software specifications required for the FCC remote bidding system are listed:

- CPU: Intel ® Pentium or above
- RAM: 16 MB (more recommended if you have multiple applications open)
- Hard Disk: 33 MB available disk space

- 1.44 MB Floppy Drive or CD–ROM Drive (to install the Remote Bidding System)
- Modem: v.32bis 28.8 kbps Hayes© compatible modem (56.6 kbps recommended)
- Monitor: VGA or above
- Mouse or other pointing device
- Microsoft® Windows ™ 95™ or 98™
- We recommend that you use Netscape® Communicator ™ 4.73. However, you can also use Netscape Communicator 4.7 or 4.72.

To download Netscape Communicator 4.73 free of charge, access the Netscape download site at http://home.netscape.com/download/.

Note: The FCC Remote Bidding System has not been tested in a Macintosh, OS/2, or Windows NT ™ environment. Therefore, the FCC will not support operating systems other than Microsoft Windows 95 or 98. This includes any other emulated Windows environment.

11. *Long-Form Applications:* All applicants should be aware that at the long-form application stage, they will be subject to the more extensive reporting requirements contained in the Commission's Part 1 ownership disclosure rule.

12. *Bidder Alerts:* All applicants must certify on their FCC Form 175 applications under penalty of perjury that they are legally, technically, financially and otherwise qualified to hold a license, and not in default on any payment for Commission licenses (including down payments) or delinquent on any non-tax debt owed to any Federal agency. Prospective bidders are reminded that submission of a false certification to the Commission is a serious matter that may result in severe penalties, including monetary forfeitures, license revocations, exclusion from participation in future auctions, and/or criminal prosecution.

13. Information about deceptive telemarketing investment schemes is available from the FTC at (202) 326–2222 and from the SEC at (202) 942–7040. Complaints about specific deceptive telemarketing investment schemes should be directed to the FTC, the SEC, or the National Fraud Information Center at (800) 876–7060. Consumers who have concerns about specific proposals may also call the FCC Consumer Center at (888) CALL–FCC ((888) 225–5322).

Federal Communications Commission.

Margaret Wiener,

Deputy Chief, Auctions and Industry Analysis Division, Wireless Telecommunications Bureau.

[FR Doc. 00–26597 Filed 10–16–00; 8:45 am]

BILLING CODE 6712–01–P

FEDERAL COMMUNICATIONS COMMISSION

Sunshine Act Meeting

October 12, 2000.

Deletion of Agenda Item From the October 12 Open Meeting

The following item has been deleted from the list of agenda items scheduled for consideration at the October 12, 2000, Open Meeting and previously listed in the Commission's Notice of October 5, 2000.

Item No. 3.

Bureau: Wireless Telecommunications.

Title: Promotion of Competitive Networks in Local Telecommunications Markets (WT Docket No. 99–217); Wireless Communications Association International, Inc., Petition for Rule Making to Amend Section 1.4000 of the Commission's Rules to Preempt Restrictions on Subscriber Premises Reception or Transmission Antennas Designed to Provide Fixed Wireless Services; Implementation of the Local Competition Provisions in the Telecommunications Act of 1996 (CC Docket No. 96–98); and Review of Sections 68.104, and 68.213 of the Commission's Rules Concerning Connection of Simple Inside Wiring to Telephone Network (CC Docket No. 88–57).

Summary: The Commission will consider a First Report and Order and Further Notice of Proposed Rule Making in WT Docket No. 99–217, a Fourth Report and Order and Memorandum Opinion and Order in CC Docket No. 96–98, and a Memorandum Opinion and Order in CC Docket No. 88–57), regarding obstacles to consumer's choice of telecommunications providers in multiple tenant environments.

Federal Communications Commission.

Magalie Roman Salas,

Secretary.

[FR Doc. 00–26781 Filed 10–13–00; 2:49 pm]

BILLING CODE 6712–01–M

FEDERAL COMMUNICATIONS COMMISSION

[Report No. 2446]

Petitions for Reconsideration and Clarification of Action in Rulemaking Proceeding

October 11, 2000.

Petitions for Reconsideration and Clarification have been filed in the Commission's rulemaking proceeding listed in this Public Notice and published pursuant to 47 CFR Section 1.429(e). The full text of this document is available for viewing and copying in Room CY–A257, 445 12th Street, SW., Washington, DC or may be purchased from the Commission's copy contractor, ITS, Inc. (202) 857–3800. Oppositions to these petitions must be filed by November 1, 2000. See Section 1.4(b)(1) of the Commission's rules (47 CFR 1.4(b)(1)). Replies to an opposition must be filed within 10 days after the time for filing oppositions have expired.

Subject: Deployment of Wireline Services Offering Advanced Telecommunications Capability (CC Docket No. 98–147); and Implementation of the Local Competition Provisions of the Telecommunications Act of 1996 (CC Docket No. 96–98).

Number of Petitions Filed: 4.

Federal Communications Commission.

Magalie Roman Salas,

Secretary.

[FR Doc. 00–26596 Filed 10–16–00; 8:45 am]

BILLING CODE 6712–01–M

FEDERAL COMMUNICATIONS COMMISSION

[Report No. 2445]

Petitions for Reconsideration and Clarification of Action in Rulemaking Proceeding

October 12, 2000.

Petitions for Reconsideration and Clarification have been filed in the Commission's rulemaking proceeding listed in this Public Notice and published pursuant to 47 CFR Section 1.429(e). The full text of this document is available for viewing and copying in Room CY–A257, 445 12th Street, SW., Washington, DC or may be purchased from the Commission's copy contractor, ITC, Inc. (202) 857–3800. Oppositions to these petitions must be filed by November 1, 2000. See Section 1.4(b)(1) of the Commission's rules (47 CFR 1.4(b)(1)). Replies to an opposition must be filed within 10 days after the time for filing oppositions have expired.

Subject: Federal-State Joint Board on Universal Service (CC Docket No. 96–45), Western Wireless Corporation Petition for Preemption of an Order of the South Dakota Public Utilities Commission.

Number of Petitions Filed: 2.

Federal Communications Commission.

Magalie Roman Salas,

Secretary.

[FR Doc. 00–26600 Filed 10–16–00; 8:45 am]

BILLING CODE 6712–01–M

FEDERAL RESERVE SYSTEM

Change in Bank Control Notices; Acquisitions of Shares of Banks or Bank Holding Companies

The notificants listed below have applied under the Change in Bank Control Act (12 U.S.C. 1817(j)) and 225.41 of the Board's Regulation Y (12 CFR 225.41) to acquire a bank or bank holding company. The factors that are considered in acting on the notices are set forth in paragraph 7 of the Act (12 U.S.C. 1817(j)(7)).

The notices are available for immediate inspection at the Federal Reserve Bank indicated. The notices also will be available for inspection at the offices of the Board of Governors. Interested persons may express their views in writing to the Reserve Bank indicated for that notice or to the offices of the Board of Governors. Comments must be received not later than October 31, 2000.

A. Federal Reserve Bank of Dallas (W. Arthur Tribble, Vice President) 2200 North Pearl Street, Dallas, Texas 75201–2272:

1. Gene Allen Van Meter, Beaumont, Texas; Barbara Van Meter, Beaumont, Texas; Gene Allen Van Meter, Jr. , Lumberton, Texas; and Gary Stephen Van Meter, Beaumont, Texas all to acquire additional voting shares of Lamar Bancshares, Inc., Beaumont, Texas, and thereby indirectly acquire additional voting shares of Lamar Bank, Beaumont, Texas.

Board of Governors of the Federal Reserve System, October 11, 2000.

Robert deV. Frierson,

Associate Secretary of the Board.

[FR Doc. 00–26542 Filed 10–16–00; 8:45 am]

BILLING CODE 6210–01–P

FEDERAL RESERVE SYSTEM

Formations of, Acquisitions by, and Mergers of Bank Holding Companies; Correction

This notice corrects a notice (FR Doc. 00–25132) published on page 58771 of the issue for Monday, October 2, 2000.

Under the Federal Reserve Bank of Kansas City heading, the entry for Sturm Financial Group, Inc., Denver, Colorado, is revised to read as follows:

A. Federal Reserve Bank of Kansas City (D. Michael Manies, Assistant Vice President) 925 Grand Avenue, Kansas City, Missouri 64198–0001:

1. Sturm Financial Group, Inc., Denver, Colorado; to become a bank holding company by acquiring 100 percent of the voting shares of Sturm Banks of Colorado, Inc., Denver, Colorado, and thereby indirectly acquire Bank of Cherry Creek N.A., Boulder, Colorado, Bank of Cherry Creek N.A., Denver, Colorado, Mesa National Bank, Grand Junction, Colorado, Western National Bank of Colorado, Colorado Springs, Colorado; Sturm Banks of Wyoming, Inc., Denver, Colorado, and thereby indirectly acquire American National Bank of Cheyenne, Cheyenne, Wyoming, Wyoming Bank & Trust Company N.A., Buffalo, Wyoming, Stockgrowers State Bank N.A., Worland, Wyoming, Bank of Laramie N.A., Laramie, Wyoming; and Sturm Banks of Kansas City, Inc., Denver, Colorado, and thereby indirectly acquire Premier Bank, Lenexa, Kansas.

In connection with this application, Applicant also has applied to acquire Community First Data Services, Inc., Cheyenne, Wyoming, and thereby engage in data processing activities, pursuant to 225.28(b)(14) of Regulation Y.

In addition to this application, Sturm Financial Group, Inc., Denver, Colorado and Sturm Banks of Kansas City, Inc., Denver, Colorado also have applied to engage in lending activities, pursuant to 225.28(b)(1) of Regulation Y.

Comments on this application must be received by October 26, 2000.

Board of Governors of the Federal Reserve System, October 11, 2000.

Robert deV. Frierson,

Associate Secretary of the Board.

[FR Doc. 00–26541 Filed 10–16–00; 8:45 am]

BILLING CODE 6210–01–P

FEDERAL RESERVE SYSTEM

Sunshine Act Meeting

AGENCY HOLDING THE MEETING: Board of Governors of the Federal Reserve System.

TIME AND DATE: 11 a.m., Monday, October 23, 2000.

PLACE: Marriner S. Eccles Federal Reserve Board Building, 20th and C Streets, NW., Washington, DC 20551.

STATUS: Closed.

MATTERS TO BE CONSIDERED:

1. Personnel actions (appointments, promotions, assignments, reassignments, and salary actions) involving individual Federal Reserve System employees.

2. Any items carried forward from a previously announced meeting.

CONTACT PERSON FOR MORE INFORMATION: Lynn S. Fox, Assistant to the Board; 202–452–3204.

SUPPLEMENTARY INFORMATION: You may call 202–452–3206 beginning at approximately 5 p.m. two business days before the meeting for a recorded announcement of bank and bank holding company applications scheduled for the meeting; or you may contact the Board's Web site at http://www.federalreserve.gov for an electronic announcement that not only lists applications, but also indicates procedural and other information about the meeting.

Dated: October 13, 2000.

Robert deV. Frierson,

Associate Secretary of the Board.

[FR Doc. 00–26784 Filed 10–13–00; 3:25 pm]

BILLING CODE 6210–01–P

FEDERAL TRADE COMMISSION

Agency Information Collection Activities; Proposed Collection; Comment Request

AGENCY: Federal Trade Commission (FTC).

ACTION: Notice.

SUMMARY: The FTC has investigated several cases in which manufacturers of pharmaceutical drug products and generic competitors have allegedly entered into anticompetitive agreements to delay generic entry. These cases may foreshadow similar anticompetitive agreements that may eliminate the benefits to consumers of generic drug competition. The FTC is considering a study to investigate how generic drug competition has developed in light of certain provisions in the Hatch-Waxman Act that govern entry of generic drug products. Before investigating whether these provisions of the Hatch-Waxman Act encourage generic competition or facilitate the use of anticompetitive strategies, the FTC seeks public comments on its proposed information requests to firms in the pharmaceutical drug industry. Comments will be considered before the FTC submits a request for Office of Management and Budget (OMB) review under the Paperwork Reduction Act.

DATES: Comments must be submitted on or before December 18, 2000.

ADDRESSES: Send written comments to Secretary, Federal Trade Commission, Room H–159, 600 Pennsylvania Avenue, NW., Washington, DC 20580, or by e-mail to <*generic drugstudy@ftc.gov*>. The submissions should include the submitter's name, address, telephone number, and, if available, FAX number and e-mail address. All submissions should be captioned ''Generic Drug Study—FTC File No. V000014.''

FOR FURTHER INFORMATION CONTACT: Requests for additional information should be addressed to Michael S. Wroblewski, Advocacy Coordinator, Policy Planning, Federal Trade Commission, 600 Pennsylvania Avenue, NW., Washington, DC 20580; telephone (202) 326–2155, e-mail <*mwroblewski@ftc.gov*>.

SUPPLEMENTARY INFORMATION: Over the next five years, brand-name drugs with combined U.S. sales approaching $20 billion will go off patent.[1] Manufacturers seeking to protect the sales of branded drug products may have an incentive and ability to enter into agreements with would-be generic competitors that would slow or thwart the entry of competing generic drug products approved by the Food and Drug Administration pursuant to its authority under the Drug Price Competition and Patent Term Restoration Act of 1984 (the Hatch-Waxman Act).

The FTC invites comment on: (1) Whether the proposed collections of information are necessary for the proper performance of the functions of the FTC, including whether the information will have practical utility; (2) the accuracy of the FTC's estimate of the burden of the proposed collections of information; (3) ways to enhance the quality, utility, and clarity of the information to be collected; and (4) ways to minimize the burden of collecting the information on those who are to respond, including through the use of collection techniques or other form of information technology, *e.g.*, permitting electronic submissions of responses. The FTC will submit the proposed information collection requirements to OMB for review, as required by the Paperwork Reduction Act of 1995 (44 U.S.C. Chapter 35, as amended).

A. Description of the Collection of Information and Proposed Use

The FTC proposes to send information requests to approximately 30 innovator drug companies (*i.e.*, brand-name drug manufacturers) and 60 generic drug companies to examine their use of agreements and other strategies that may affect generic drug competition. The companies to which the information requests would be sent include name-brand pharmaceutical drug companies that have received notice of the filing of an Abbreviated New Drug Application (ANDA), as defined by 21 U.S.C. 355(j), and generic drug companies that have filed such ANDAs since January 1, 1991. In addition to routine questions about the name, address, and incorporation date of the responding company and its subsidiaries, and the name, business address, and official capacity of the official supervising the company's response, the FTC will ask innovator drug companies to provide answers to the following four questions:

1. Submit all agreements between the company and any person[2] (including corporations or other business entities acquired since the agreement(s) was (were) executed) executed after January 1, 1991, relating to[3] an ANDA, involving any Drug Product.[4] Examples of such agreements include, but are not limited to: (a) Patent litigation settlements (full or partial) between the company and persons that have filed an ANDA involving any Drug Product; (b) agreements related to the filing (or non-filing) of an ANDA by any applicant (or potential applicant) involving any Drug Product; (c) licensing agreements between the company and persons that have filed an ANDA involving any Drug Product; and (d) agreements related to any acquisition, divestiture, joint venture, alliance, license or merger by the company of any business involving the research, development, manufacture or sale of any Drug Product that is the subject of an ANDA. The company is not required to submit purchase orders for base active materials, equipment and facility contracts, and employment contracts. For any such agreement submitted, also submit all studies, surveys, analyses and reports which were prepared by or for any officer(s) or director(s) of the company (or, in the case of unincorporated entities, individuals exercising similar functions) that evaluate or analyze the reasons for making such agreement (or any of the provisions in such agreement), and indicate (if not contained in the document itself) the date of preparation, and the name and title of each individual who prepared each such document.

2. Identify all patents that the company has filed in the Orange Book and the date of listing (regardless of whether they are currently listed in the Orange Book) relating to any Drug Product for which the company has been notified of the filing of an ANDA by another person. Also indicate if the patent(s) was (were) filed after the company received approval of the New Drug Application, as defined under 21 U.S.C. 355(b) *et seq.*, for the Drug Product. Also submit a copy of each such patent identified and identify whether the patent is owned by, assigned to, or licensed to the company.

3. Identify and list all lawsuits since January 1, 1991 (including the court, date filed, docket number, parties, current or final status (including dates), current or final docket sheet, and any reporter cites) to which the company is or was a party that involve an ANDA paragraph IV certification related to any Drug Product. Submit the complaint, the answer, any motion(s) for summary judgment, and any court orders for each such lawsuit.

4. For each Drug Product for which the company has been notified that an ANDA containing a paragraph IV certification had been filed with the FDA, state the company's sales,[5] in units and dollars, by dosage for each calendar year since, and including, the year the company was notified of the filing of such ANDA.

In addition to routine questions about the name, address, and incorporation date of the responding company and its subsidiaries, and the name, business address, and official capacity of the official supervising the company's response, the FTC will ask generic drug companies to provide answers to the following five questions:

1. Submit all agreements between the company and any other person[6] (including corporations or other business entities acquired since the agreement(s) was (were) executed) executed after January 1, 1991, relating to[7] any ANDA involving any Drug Product.[8] Examples of such agreements

[1] National Institute for Health Care Management, ''Prescription Drugs and Intellectual Property Protection'' at 3 (August 2000).

[2] The term ''person'' means any natural person, corporate entity, partnership, association, joint venture, or trust which is engaged in research and development, planning and design, production and manufacturing, distribution, or sales and marketing of any Drug Product.

[3] The term ''relating to'' means in whole or in part constituting, containing, concerning, discussing, describing, analyzing, identifying or stating.

[4] The term ''Drug Product'' includes any pharmaceutical drug substance the company has listed in the publication ''Approved Drug Products with Therapeutic Equivalence Evaluations'' (the ''Orange Book'') (regardless of whether the Drug Product is currently listed in the Orange Book) and specifically includes, but is not limited to, drug products which contain certain active ingredients. (A list of such active ingredients will be tailored specifically for each company based on whether the company has been notified that a paragraph IV ANDA has been submitted against it for such drug product.)

[5] The term ''sales'' means net sales, *i.e.*, total sales after deducting discounts, returns, allowances and excise taxes. ''Sales'' includes sales of the Drug Product whether manufactured by the company itself or purchased from sources outside the company and resold by the company in the same manufactured form as purchased.

[6] *See* n. 2 supra.

[7] *See* n. 3 supra.

[8] The term ''Drug Product'' includes any pharmaceutical drug substance listed in the Orange Book (regardless of whether the Drug Product is

Continued

include, but are not limited to: (a) Patent litigation settlements (either full or partial) between the company and any Innovator Company; [9] (b) agreements between the company and any other person related to the filing (or non-filing) of an ANDA by the company involving any Drug Product; (c) licensing agreements entered into with any Innovator Company; and (d) agreements related to any acquisition, divestiture, joint venture, alliance, license or merger by the company of any business involving the research, development, manufacture or sale of any Drug Product that is the subject of an ANDA. The company is not required to submit purchase orders for base active materials, equipment and facility contracts, and employment contracts. For any such agreement submitted, also submit all studies, surveys, analyses and reports which were prepared by or for any officer(s) or director(s) (or, in the case of unincorporated entities, individuals exercising similar functions) that evaluate or analyze the reasons for making such agreement (or any of the provisions in such agreement), and indicate (if not contained in the document itself) the date of preparation, and the name and title of each individual who prepared each such document.

2. Identify and list all lawsuits since January 1, 1991 (including the court, date filed, docket number, parties, current or final status (including dates), current or final docket sheet, and any reporter cites) to which the company is or was a party involving an ANDA paragraph IV certification. In those cases in which the company is not the sole defendant, describe how litigation expenses are or have been distributed among the parties.

3. Identify when the company began first commercial marketing of a generic version of any Drug Product approved by the FDA since January 1, 1991 in those instances in which the Innovator Company brought an action for infringement of a patent against the company or any other ANDA applicant (or, if applicable, indicate that no such commercial marketing has occurred). Identify when the company received tentative and final approvals from the Food and Drug Administration (FDA) for such Drug Product.

4. Identify each instance in which the company has asserted before a court or before the FDA that a patent was improperly or untimely listed as defined in 21 U.S.C. 355(b) or (c). For each such assertion, submit the pleading(s) in which such assertion was made and any responsive pleading(s).

5. For each Drug Product for which the company has filed an ANDA containing a paragraph IV certification, state the company's sales [10] (if any), in units and dollars, by dosage for each calendar year since, and including, the year the company received approval of such ANDA.

The FTC will obtain the information sought by interrogatories and document requests under section 6(b) of the FTC Act, 15 U.S.C. 46(b). The documents and information obtained through these orders will help the FTC determine whether agreements or other strategies are being used to delay generic drug competition and thus may merit law enforcement action, and to evaluate the effectiveness of the generic drug provisions of the Hatch-Waxman Act. It should be noted that subsequent to this notice any destruction, removal, mutilation, alteration, or falsification of documentary evidence that may be responsive to this information collection within the possession or control of a person, partnership or corporation subject to the FTC Act is subject to criminal prosecution. 15 U.S.C. 50; *see also* 18 U.S.C. § 1505.

B. Estimated Burden Hours

The FTC will ask members of the pharmaceutical industry to answer several written questions and to produce documents related to the answers provided. Because the responses will necessarily vary depending upon the extent to which drug companies have entered into such agreements, listed patents in the Orange Book, engaged in litigation related to ANDAs containing a paragraph IV certification, and commercially marketed particular generic drug products, the FTC has provided a range of estimated response times from 90 hours to 400 hours. The total estimated burden of answering the questions and producing documents per respondent is based on the following:

Organize document and information retrieval: 15–50 hours.

Identify requested information: 15–150 hours.

Retrieve responsive information: 20–80 hours.

Copy requested information: 20–40 hours.

Prepare response: 20–80 hours.

Thus, the cumulative hours burden to produce documents and prepare the response sought will be between 8,100 hours (90 hours × 90 companies) and 36,000 hours (400 hours × 90 companies).

C. Estimated Cost Burden

It is not possible to calculate with precision the labor costs associated with answering the questions and producing the documents requested, as responses will entail participation by management and/or support staff at various compensation levels among many different companies. Individuals among some or all of those labor categories may be involved in the information collection process. Nonetheless, the FTC has assumed that mid-management personnel will handle most of the tasks involved in gathering and producing the responsive information, and has applied an average hourly wage of $150/hour for their labor. The FTC also has applied an average hourly wage of $10 for the labor of clerical employees who will copy the responsive materials. Thus, the labor costs per company should range between $10,700 [(70 hours × $150/hour) + (20 hours × $10/hour)] and $53,000 [(350 hours × $150/hour) + (50 hours × $10/hour)].

The FTC estimates that the capital or other non-labor costs associated with the information requests will be minimal. Although the information requests may require that respondent retain copies of the information provided to the Commission, industry members should already have in place the means to store information of the volume requested. In addition, respondents may have to purchase office supplies such as file folders, computer diskettes, photocopier toner, or paper in order to comply with the Commission's requests. The FTC estimates that each respondent will spend $500 for such costs regarding the information request, for a total additional non-labor cost burden of $45,000 ($500 × 90 companies).

By direction of the Commission.

Donald S. Clark,

Secretary.

[FR Doc. 00–26649 Filed 10–16–00; 8:45 am]

BILLING CODE 6750–01–P

currently listed in the Orange Book) and specifically includes drug product containing certain active ingredients. (A list of such active ingredients will be tailored specifically for each company based on whether the company has submitted a paragraph IV ANDA for such drug product.)

[9] The term ''Innovator Company'' means each company (including its predecessors in interest, subsidiaries, affiliates, successors, and assigns) that has filed a New Drug Application, as defined under 21 U.S.C. 355(b) *et seq.* for any Drug Product.

[10] *See* n. 5 supra.

FEDERAL TRADE COMMISSION.

[File No. 982 3035]

Weider Nutrition International, Inc.; Analysis to Aid Public Comment

AGENCY: Federal Trade Commission.

ACTION: Proposed consent agreement.

SUMMARY: The consent agreement in this matter settles alleged violations of federal law prohibiting unfair or deceptive acts or practices or unfair methods of competition. The attached Analysis to Aid Public Comment describes both the allegations in the draft complaint that accompanies the consent agreement and the terms of the consent order—embodied in the consent agreement—that would settle these allegations.

DATES: Comments must be received on or before November 6, 2000.

ADDRESSES: Comments should be directed to: FTC/Office of the Secretary, Room 159, 600 Pennsylvania Ave., NW., Washington, DC 20580.

FOR FURTHER INFORMATION CONTACT: Richard Cleland or Lemuel Dowdy, FTC/S–4002, 600 Pennsylvania Ave., NW., Washington, DC 20580; (202) 326–3088 or 326–2981.

SUPPLEMENTARY INFORMATION: Pursuant to section 6(f) of the Federal Trade Commission Act, 38 Stat. 721, 15 U.S.C. 46 and Section 2.34 of the Commisison's Rules of Practice (16 CFR 2.34), notice is hereby given that the above-captioned consent agreement containing a consent order to cease and desist, having been filed with and accepted, subject to final approval, by the Commission, has been placed on the public record for a period of thirty (30) days. The following Analysis to Aid Public Comment describes the terms of the consent agreement, and the allegations in the complaint. An electronic copy of the full text of the consent agreement package can be obtained from the FTC Home Page (for October 5, 2000), on the World Wide Web, at ''http://www.ftc.gov/os/2000/09/index.htm.'' A paper copy can be obtained from the FTC Public Reference Room, Room H–130, 600 Pennsylvania Avenue NW., Washington, DC 20580, either in person or by calling (202) 326–3627.

Public comment is invited. Comments should be directed to: FTC/Office of the Secretary, Room 159, 600 Pennsylvania. Ave., NW., Washington, DC 20580. Two paper copies of each comment should be filed, and should be accompanied, if possible by a 3½-inch diskette containing an electronic copy of the comment. Such comments or views will be considered by the Commission and will be available for inspection and copying at its principal office in accordance with section 4.9(b)(6)(ii) of the Commission's Rules of Practice (16 CFR 4.9(b)(6)(ii)).

Analysis of Proposed Consent Order To Aid Public Comment

The Federal Trade Commission has accepted an agreement to a proposed consent order from Weider Nutrition International, Inc. (hereinafter ''Weider'').

The proposed consent order has been placed on the public record for thirty (30) days for the reception of comments by interested persons. Comments received during this period will become part of the public record. After thirty (30) days, the Commission will again review the agreement and any comments received and will decide whether it should withdraw from the agreement and take other appropriate action or make final the agreement's proposed order.

This matter involves advertisements for a dietary supplement called PhenCal or PhenCal 106. Advertisements claimed that PhenCal and PhenCal 106 have been proven to cause weight loss and to prevent the regaining of lost weight. These advertisements appeared in major newspapers such as the New York Times, the Washington Post, and USA Today.

The proposed complaint alleges that Weider could not substantiate claims that PhenCal and PhenCal 106: (1) Cause significant weight loss; (2) significantly increase a person's ability to maintain a reduced caloric diet and exercise program; (3) significantly reduce food cravings and eating binges; (4) prevent the regaining of lost weight; (5) are as effective as the prescription weight loss treatment commonly known as ''Phen-Fen''; and (6) are safe when used to promote or maintain weight loss. The complaint also alleges that Weider made false representations that claims (1), (3), (4), (5), and (6) above, had been scientifically proven.

The proposed consent order contains provisions designed to prevent the respondent from engaging in similar acts and practices in the future.

Part I of the proposed order requires respondent, when advertising any food, drug, dietary supplement or program, to possess competent and reliable scientific evidence before making claims (1) through (6) above.

Part II of the proposed order requires respondent, when advertising any food, drug, dietary supplement, or program, to possess competent and reliable scientific evidence before making claims relating to—

A. The safety of such product or program;

B. The effect of such product or program on any disease; or

C. The comparative or superior health benefit of such product or program with respect to any other product or program.

Part III prohibits respondent from misrepresenting the existence, contents, validity, results, conclusions, or interpretations of any test, study or research in an advertisement for any food, drug, dietary supplement or program.

Part IV allows the respondent to make representations for any drug that are permitted in labeling for that drug under any tentative final or final Food and Drug Administration (''FDA'') standard or under any new drug application approved by the FDA.

Part V allows the respondent to make representations for any product that are specifically permitted in labeling for that product by regulations issued by the FDA under the Nutrition Labeling and Education Act of 1990.

Part VI requires respondent to pay $400,000 to the Commission. These funds will be used for consumer redress or, if that is impracticable, the funds will be paid to the United States Treasury.

Part VII requires respondent to retain, and make available to the Commission, upon request, all advertisements and promotional materials containing any representation covered by the order, as well as any materials that it relied upon in disseminating the representation and any materials that contradict, qualify, or call into question the representation.

The remainder of the proposed order contains standard requirements that the respondent distribute the order to relevant personnel, that respondent notify the Commission of any changes in corporate structure that might affect compliance with the order and that the respondent file one or more reports detailing its compliance with the order.

The purpose of this analysis is to facilitate public comment on the proposed order, and it is not intended to constitute an official interpretation of the agreement and proposed order, or to modify in any way its terms.

By direction of the Commission.

C. Landis Plummer,

Acting Secretary.

[FR Doc. 00–26648 Filed 10–16–00; 8:45 am]

BILLING CODE 6750–01–M

DEPARTMENT OF HEALTH AND HUMAN SERVICES

Notice of a Meeting of the National Bioethics Advisory Commission (NBAC)

SUMMARY: Pursuant to Section 10(d) of the Federal Advisory Committee Act, as amended (5 U.S.C. Appendix 2), notice is given of a meeting of the National Bioethics Advisory Commission. The Commission will discuss its ongoing project ethical and policy issues in the oversight of human subjects research in the United States. Some Commission members may participate by telephone conference. The meeting is open to the public and opportunities for statements by the public will be provided on October 24 from 1:30–2:00 pm.

Date, Time, and Location

October 24, 2000, 8:30 a.m.–5:00 p.m.
Embassy Suites Hotel, Downtown Salt Lake City, 110 West 600 South, Salt Lake City, Utah 84101

October 25, 2000, 8:00 a.m.–12:00 p.m.
Same Location as Above

SUPPLEMENTARY INFORMATION: The President established the National Bioethics Advisory Commission (NBAC) on October 3, 1999 by Executive Order 12975 as amended. The mission of the NBAC is to advise and make recommendations to the National Science and Technology Council, its Chair, the President, and other entities on bioethical issues arising from the research on human biology and behavior, and from the applications of that research.

Public Participation

The meeting is open to the public with attendance limited by the availability of space on a first come, first serve basis. Members of the public who wish to present oral statements should contact Ms. Jody Crank by telephone, fax machine, or mail as shown below as soon as possible, at least 4 days before the meeting. The Chair will reserve time for presentations by persons requesting to speak and asks that oral statements be limited to five minutes. The order of persons wanting to make a statement will be assigned in the order in which requests are received. Individuals unable to make oral presentations can mail or fax their written comments to the NBAC staff office at least five business days prior to the meeting for distribution to the Commission and inclusion in the public record. The Commission also accepts general comments at its website at bioethics.gov. Persons needing special assistance, such as sign language interpretation or other special accommodations, should contact NBAC staff at the address or telephone number listed below as soon as possible.

FOR FURTHER INFORMATION CONTACT: Ms. Jody Crank, National Bioethics Advisory Commission, 6705 Rockledge Drive, Suite 700, Bethesda, Maryland 20892–7979, telephone (301) 402–4242, fax number (301) 480–6900.

Dated: October 11, 2000.

Eric M. Meslin,

Executive Director, National Bioethics Advisory Commission.

[FR Doc. 00–26558 Filed 10–16–00; 8:45 am]

BILLING CODE 4167–01–P

DEPARTMENT OF HEALTH AND HUMAN SERVICES

Centers for Disease Control and Prevention

Citizens Advisory Committee on Public Health Service Activities and Research at Department of Energy Sites: Savannah River Site Health Effects Subcommittee

In accordance with section 10(a)(2) of the Federal Advisory Committee Act (P.L. 92–463), the Centers for Disease Control and Prevention (CDC) and the Agency for Toxic Substances and Disease Registry (ATSDR) announce the following meeting.

Name: Citizens Advisory Committee on Public Health Service Activities and Research at Department of Energy (DOE) Sites: Savannah River Site Health Effects Subcommittee (SRSHES).

Times and Dates:

8:30 a.m.–5 p.m., November 2, 2000.

8:30 a.m.–12 noon, November 3, 2000.

Place: Westin on Hilton Head Island, Two Grasslawn Avenue, Hilton Head Island, South Carolina 29928–5536, telephone 843/681–4000, fax 843/681–1087.

Status: Open to the public, limited only by the space available. The meeting room accommodates approximately 50 people.

Background: Under a Memorandum of Understanding (MOU) signed in December 1990 with DOE and replaced by an MOU signed in 1996, the Department of Health and Human Services (HHS) was given the responsibility and resources for conducting analytic epidemiologic investigations of residents of communities in the vicinity of DOE facilities, workers at DOE facilities, and other persons potentially exposed to radiation or to potential hazards from non-nuclear energy production use. HHS delegated program responsibility to CDC.

In addition, a memo was signed in October 1990 and renewed in November 1992 between ATSDR and DOE. The MOU delineates the responsibilities and procedures for ATSDR's public health activities at DOE sites required under sections 104, 105, 107, and 120 of the Comprehensive Environmental Response, Compensation, and Liability Act (CERCLA or ''Superfund''). These activities include health consultations and public health assessments at DOE sites listed on, or proposed for, the Superfund National Priorities List and at sites that are the subject of petitions form the public; and other health-related activities such as epidemiologic studies, health surveillance, exposure and disease registries, health education, substance-specific applied research, emergency response, and preparation of toxicological profiles.

Purpose: This subcommittee is charged with providing advice and recommendations to the Director, CDC, and the Administrator, ATSDR, pertaining to CDC's and ATSDR's public health activities and research at this DOE site. The purpose of this meeting is to provide a forum for community interaction and serve as a vehicle for community concern to be expressed as advice and recommendations to CDC and ATSDR.

MAtters to be Discussed: Agenda items include presentations from the National Center for Environmental Health (NCEH) and ATSDR on updates regarding progress of current studies. Agenda items are subject to change as priorities dictate.

Contact Person for more Information: Paul G. Renard, Executive Secretary, SRSHES, Radiation Studies Branch, Division of Environmental Hazards and Health Effects, NCEH, CDC, Building 6, Room T004, 1600 Clifton Road, NE (E–39), Atlanta, GA 30333, telephone 404/639–2550, fax 404/639–2575.

The Director, Management Analysis and Services Office has been delegated the authority to sign **Federal Register** notices pertaining to announcements of meetings and other committee management activities for both CDC and ATSDR.

Dated: October 4, 2000.

Carolyn J. Russell,

Director, Management Analysis and Services Office, Centers for Disease Control and Prevention.

[FR Doc. 00–26588 Filed 10–16–00; 8:45 am]

BILLING CODE 4163–18–P

DEPARTMENT OF HEALTH AND HUMAN SERVICES

Administration for Children and Families

Submission for OMB Review; Comment Request

Title: Annual Survey of Refugees (ASR).

OMB No.: 0970–0033.

Description: The Refugee Act of 1980, and the Refugee Assistance amendments enacted in 1982 and 1986, stress the achievement of employment and self-sufficiency by refugees as soon as possible after their arrival in the U.S. The Annual Survey of Refugees collects information on the economic circumstances of a random sample of refugees, Amerasians, and entrants who arrived in the U.S. during the previous five years focusing on their education, training, labor force participation, and welfare utilization rates. From their responses, ORR reports on the economic adjustment of refugees to the American economy. These data are used by Congress in its annual deliberations of refugee admissions and funding and by program managers in formulating policies for the future direction of the Refugee Resettlement Program.

Respondents: Approximately 2,000 refugees.

ANNUAL BURDEN ESTIMATES

Instrument	Number of respondents	Number of responses per respondents	Average burden hours per response	Total burden hours
ASR Telephone Survey	2,000	1	40 minutes	1,350
Estimated Total Annual Burden Hours:				1,350

Additional Information: Copies of the proposed collection may be obtained by writing to The Administration for Children and Families, Office of Information Services, 370 L'Enfant Promenade, SW., Washington, DC 20447, Attn: ACF Reports Clearance Officer.

OMB Comment: OMB is required to make a decision concerning the collection of information between 30 and 60 days after publication of this document in the **Federal Register**. Therefore, a comment is best assured of having its full effect if OMB receives it within 30 days of publication. Written comments and recommendations for the proposed information collection should be sent directly to the following: Office of Management and Budget, Paperwork Reduction Project, 725 17th Street, NW., Washington, DC 20503, Attn: Desk Officer for ACF.

Dated: October 11, 2000.

Bob Sargis,

Reports Clearance Officer.

[FR Doc. 00–26657 Filed 10–16–00; 8:45 am]

BILLING CODE 4184–01–M

DEPARTMENT OF HEALTH AND HUMAN SERVICES

Food and Drug Administration

[Docket No. 00N–1379]

Agency Information Collection Activities; Submission for OMB Review; Comment Request; Procedures for the Safe Processing and Importing of Fish and Fishery Products

AGENCY: Food and Drug Administration, HHS.

ACTION: Notice.

SUMMARY: The Food and Drug Administration (FDA) is announcing that the proposed collection of information listed below has been submitted to the Office of Management and Budget (OMB) for review and clearance under the Paperwork Reduction Act of 1995.

DATES: Submit written comments on the collection of information by November 16, 2000.

ADDRESSES: Submit written comments on the collection of information to the Office of Information and Regulatory Affairs, OMB, New Executive Office Bldg., 725 17th St. NW., rm. 10235, Washington, DC 20503, Attn: Wendy Taylor, Desk Officer for FDA.

FOR FURTHER INFORMATION CONTACT: Peggy Schlosburg, Office of Information Resources Management (HFA–250), Food and Drug Administration, 5600 Fishers Lane, Rockville, MD 20857, 301–827–1223.

SUPPLEMENTARY INFORMATION: In compliance with 44 U.S.C. 3507, FDA has submitted the following proposed collection of information to OMB for review and clearance.

Procedures for the Safe Processing and Importing of Fish and Fishery Products (OMB Control Number 0910–0354)—Extension

FDA regulations in part 123 (21 CFR part 123) mandate the application of Hazard Analysis and Critical Control Point (HACCP) principles to the processing of seafood. HACCP is a preventive system of hazard control designed to help ensure the safety of foods. The regulations were issued under FDA's statutory authority to regulate food safety, including section 402(a)(1) and (a)(4) of the Federal Food, Drug, and Cosmetic Act (21 U.S.C. 342(a)(1) and (a)(4)), and became effective on December 18, 1997.

Certain provisions in part 123 require that processors and importers of seafood collect and record information. The HACCP records compiled and maintained by a seafood processor primarily consist of the periodic observations recorded at selected monitoring points during processing and packaging operations, as called for in a processor's HACCP plan (e.g., the values for processing times, temperatures, acidity, etc. as observed at critical control points). The primary purpose of HACCP records is to permit a processor to verify that products have been produced within carefully established processing parameters (critical limits) that ensure that hazards have been avoided. HACCP records are normally reviewed by appropriately trained employees at the end of a production lot or at the end of a day or week of production to verify that control limits have been maintained, or that appropriate corrective actions were taken if the critical limits were not maintained. Such verification activities are essential to ensure that the HACCP system is working as planned. A review of these records during the conduct of periodic plant inspections also permits FDA to determine whether the products have been consistently processed in conformance with appropriate HACCP food safety controls.

Section 123.12 requires that importers of seafood products take affirmative steps and maintain records that verify that the fish and fishery products they offer for import into the United States

were processed in accordance with the HACCP and sanitation provisions set forth in part 123. These records are also to be made available for review by FDA as provided in § 123.12(c).

The time and costs of these recordkeeping activities will vary considerably among processors and importers of fish and fishery products, depending on the type and number of products involved, and the nature of the equipment or instruments required to monitor critical control points. The burdens have been estimated using typical small seafood processing firms as a model because these firms represent a significant proportion of the industry.

The burden estimate in table 1 includes only those collections of information under the seafood HACCP regulations that are not already required under other statutes and regulations. For example, the current good manufacturing practices provisions in 21 CFR part 110 already require that all food processors ensure good sanitary practices and conditions, monitor the quality of incoming materials, monitor and control food temperatures to prevent bacterial growth, and perform certain corrective actions and verification procedures. Furthermore, the estimate does not include collections of information that are a usual and customary part of businesses' normal activities. For example, the tagging and labeling of molluscan shellfish (21 CFR 1240.60) is a customary and usual practice among seafood processors. Consequently the estimates in table 1 account only for new information collection and recording requirements attributable to part 123.

In the **Federal Register** of July 21, 2000 (65 FR 45382), the agency requested comments on the proposed collection of information. No comments were received.

FDA estimates the burden of this collection of information as follows:

TABLE 1.—ESTIMATED ANNUAL RECORDKEEPING BURDEN[1]

21 CFR Section	No. of Recordkeepers	Annual Frequency per Recordkeeping[2]	Total Annual Records	Hours per Recordkeeper[3]	Total Hours	Total Operating and Maintenance Costs
123.6(a), (b), and (c)	243	1	243	16	3,888	$58,320
123.6(c)(5)	4,850	4	19,400	0.30	5,820	$87,300
123.8(a)(1) and (c)	4,850	1	4,850	4	19,400	$291,000
123.12(a)(2)(ii)	1,000	80	80,000	0.20	16,000	$240,000
123.6(c)(7)	4,850	280	1,358,000	0.30	407,400	$6,111,000
123.7(d)	1,940	4	7,760	0.10	1,940	$29,100
123.8(d)	4,850	47	227,950	0.10	227,795	$341,925
123.11(c)	4,850	280	1,358,000	0.10	135,800	$2,037,000
123.12(c)	1,000	80	80,000	0.10	8,000	$120,000
123.12(a)(2)	50	1	50	4	200	$3,000
123.10	243	1	24	24	5,832	$87,480
Total					627,075	$9,406,125

[1] There are no capital costs associated with this collection of information.
[2] Based on an estimated 280 working days per year.
[3] Estimated average time per 8-hour work day unless one time response.
The above estimates include the information collection requirements in the following sections:
§ 123.16 Smoked Fish—process controls (see § 123.6(b)),
§ 123.28(a) Source Controls—molluscan shellfish (see § 123.6(b)), and
§ 123.28(c), (d) Records—molluscan shellfish (see § 123.6(c)(7)).

Dated: October 6, 2000.

Margaret M. Dotzel,

Associate Commissioner for Policy.

[FR Doc. 00–26607 Filed 10–16–00; 8:45 am]

BILLING CODE 4160–01–F

DEPARTMENT OF HEALTH AND HUMAN SERVICES

Food and Drug Administration

Advisory Committee for Pharmaceutical Science; Notice of Meeting

AGENCY: Food and Drug Administration, HHS.

ACTION: Notice.

This notice announces a forthcoming meeting of a public advisory committee of the Food and Drug Administration (FDA). The meeting will be open to the public.

Name of Committee: Advisory Committee for Pharmaceutical Science.

General Function of the Committee: To provide advice and recommendations to the agency on FDA's regulatory issues.

Date and Time: The meeting will be held on November 15 and 16, 2000, from 8:30 a.m. to 5:30 p.m.

Location: University of Maryland, Shady Grove Campus, Auditorium, 9640 Gudelsky Dr., Rockville, MD 20850.

Contact Person: Nancy Chamberlin, Center for Drug Evaluation and Research (HFD 21), Food and Drug Administration, 5600 Fishers Lane (for express delivery, 5630 Fishers Lane, rm. 1093), Rockville, MD 20857, 301–827–7001, or e-mail: CHAMBERLINN@cder.fda.gov, or FDA Advisory Committee Information Line, 1–800–741–8138 (301–443–0572 in the Washington, DC area), code 12539. Please call the Information Line for up-to-date information on this meeting.

Agenda: On November 15, 2000, the committee will: (1) Discuss approaches to reducing the regulatory burden for chemistry, manufacturing, and controls supplements; and (2) hear reports and provide direction to the Advisory Committee for Pharmaceutical Science's Subcommittee on Orally Inhaled and Nasal Drug Products, and to the Subcommittee on Nonclinical Studies. On November 16, 2000, the committee will: (1) Discuss the FDA guidance entitled ''A Guidance for Industry, Waiver of In Vivo Bioavailability and Bioequivalence Studies for Immediate-Release Solid Oral Dosage Forms Based on a Biopharmaceutics Classification System,'' see the FDA Internet web address www.fda.gov/cder/guidance/3618fnl.htm under the heading of ''Biopharmaceutic Guidances;'' the FDA draft guidance entitled ''A Guidance for Industry, BA and BE Studies for Orally Administered Drug Products-General Considerations,'' see the FDA Internet

web address www.fda.gov/cder/guidance/2762dft.htm under the heading of ''Biopharmaceutic Draft Guidances;'' and the FDA draft guidance entitled ''A Guidance for Industry, Average, Population, and Individual Approaches to Establishing Bioequivalence,'' see the FDA Internet web address www.fda.gov/cder/guidance/1716dft.htm under the heading of ''Biopharmaceutic Draft Guidances;'' (2) provide comments and advice to the Clinical Pharmacology Modeling and Simulation Working Group; (3) receive updates on both FDA intramural research and the Product Quality Research Institute; and (4) provide advice on scientific issues specific to generic drugs.

Procedure: Interested persons may present data, information, or views, orally or in writing, on issues pending before the committee. Written submissions may be made to the contact person by November 6, 2000. Oral presentations from the public will be scheduled between approximately 1 p.m. to 2 p.m. Time allotted for each presentation may be limited. Those desiring to make formal oral presentations should notify the contact person before November 6, 2000, and submit a brief statement of the general nature of the evidence or arguments they wish to present, the names and addresses of proposed participants, and an indication of the approximate time requested to make their presentation.

Notice of this meeting is given under the Federal Advisory Committee Act (5 U.S.C. app. 2).

Dated: October 5, 2000.

Bernard A. Schwetz,

Acting Deputy Commissioner.

[FR Doc. 00–26606 Filed 10–16–00; 8:45 am]

BILLING CODE 4160–01–F

DEPARTMENT OF HEALTH AND HUMAN SERVICES

National Institutes of Health

Proposed Collection; Comment Request; Survey of IRB Chairs Concerning the Implementation of Pediatric Research Regulations

SUMMARY: In compliance with the requirement of Section 3506(c)(2)(A) of the Paperwork Reduction Act of 1995 for opportunity for public comment on proposed data collection projects, the National Institutes of Health (NIH) will publish periodic summaries of proposed projects to be submitted to the Office of Management and Budget (OMB) for review and approval.

Proposed Collection

Title: Survey of IRB Chairs Concerning the Implementation of Pediatric Research Regulations.

Type of Information Collection Request: New.

Need and Use of Information Collection: In order to assess the protection of children who are enrolled in clinical research, it is important to determine how Institutional Review Boards (IRBs) reviewing such research interpret and implement the Federal Regulations for research with children set forth in 45 CFR 46 Subpart D. This study aims to gather this information through telephone interviews with chairpersons of IRBs that review clinical research with children. In addition, we will solicit background information on each IRB from the IRB coordinator. In particular, the survey aims to assess how IRBs assess risk/benefit levels of research with children, when IRBs permit children's assent to be waived, what information IRBs require children to be presented during the asset process, and which children are excluded from participation in riskier research. In addition, the survey will attempt to determine how the recent NIH Policy and Guidelines on the Inclusion of Children as Participants in Research Involving Human Subjects has affected IRB review. *Frequency of Response:* Once. *Affected Public:* Individuals. *Type of Respondents:* IRB chairpersons and IRB coordinators. The annual reporting burden follows in the table below. The annualized cost to respondents is estimated at: $10,000. There are no Capital Costs to report. There are no Operating or Maintenance Cost to report.

RESPONDENT AND BURDEN ESTIMATE INFORMATION

Type of respondents	Estimated number of respondents	Estimated number of responses per respondent	Average burden hours per response	Estimated total annual burden hours requested
IRB chairs	200	1	0.5	100
IRB coordinators	200	1	0.5	100
Total				200

Request for Comments

Written comments and/or suggestions from the public and affected agencies are invited on one or more of the following points: (1) Whether the proposed collection of information is necessary for the proper performance of the function of the agency, including whether the information will have practical utility; (2) The accuracy of the agency's estimate of the burden of the proposed collection of information, including the validity of the methodology and assumptions used; (3) Ways to enhance the quality, utility, and clarity of the information to be collected; and (4) Ways to minimize the burden of collection of information on those who are to respond, including the use of appropriate automated, electronic, mechanical, or other technological collection techniques or other forms of information technology.

FOR FURTHER INFORMATION CONTACT: To request more information on the proposed project or to obtain a copy of the data collection plans and instruments, contact Dave Wendler, Ph.D., Head, Unit on Vulnerable Populations, Department of Clinical Bioethics, NIH, Building 10, Room 1C118, 9000 Rockville Pike, Bethesda, MD 20892, or call non-toll-free number (301) 435–8726 or e-mail your request, including your address, to: DWendler@cc.nih.gov.

Comments Due Date

Comments regarding this information collection are best assured of having their full effect if received on or before December 18, 2000.

Dated: October 4, 2000.

Ezekiel Emanuel,

Chief, Department of Clinical Bioethics.

[FR Doc. 00–26581 Filed 10–16–00; 8:45 am]

BILLING CODE 4140–01–M

DEPARTMENT OF HEALTH AND HUMAN SERVICES

National Institutes of Health

Proposed Collection; Comment Request; The National Epidemiologic Survey on Alcohol and Related Conditions

SUMMARY: In compliance with the requirement of Section 3506(c)(2)(A) of the Paperwork Reduction Act of 1995, for opportunity for public comment on proposed data collection projects, the National Institute on Alcohol Abuse and Alcoholism (NIAAA), the National Institutes of Health (NIH) will publish periodic summaries of proposed projects to be submitted to the Office of Management and Budget (OMB) for review and approval.

Proposed Collection

Title: The National Epidemiologic Survey on Alcohol and Related Conditions. *Type of Information Collect Request:* New. *Need and Use of Information Collection:* This study will determine the incidence and prevalence of alcohol used disorders in a representative sample of the United States population with the primary purpose of estimating the extent and distribution of alcohol consumption, alcohol use disorders and their associated psychological and medical disabilities across major sociodemographic subgroups. The primary objectives of this first wave of this longitudinal study is to understand the relationships between alcohol consumption, alcohol use disorders and their related disabilities with a view towards designing more effective treatment and intervention programs. The findings will provide valuable information concerning: (1) Trends in alcohol use disorders and their related disabilities in subgroups of the population of special concern; (2) identification of subgroups at high risk for alcohol use disorders that may be complicated by associated psychological and medical disabilities; (3) incidence of alcohol use disorders and their Associated disabilities with a view toward understanding their natural history; (4) treatment utilization of alcohol use disorders in order to determine unmet treatment need and linguistic, social, economic and cultural barriers to treatment; (5) the college-aged segment of the population at high risk for binge drinking and its adverse consequences; and (6) the identification of safe and hazardous levels of drinking as they relate to the development of alcohol use disorders and their associated disabilities. *Frequency of Response:* On occasion. *Affected Public:* Individuals *Type of Respondents:* Adults. *Estimated Number of Respondents:* 48,000; Estimated Number of Responses per Respondent: 1; *Average Burden Hours Per Response:* 1.00; and *Estimated Total Annual Burden Hours Requested:* 48,000. The annualized cost to respondents is estimated at: $576,000.00. There are no Capital Costs to report. There are no Operating or Maintenance Costs to report.

Request for Comments

Written comments and/or suggestions from the public and affected agencies are invited on one or more of the following points: (1) Whether the proposed collection of information is necessary for the proper performance of the function of the agency, including whether the information will have practical utility; (2) The accuracy of the agency's estimate of the burden of the proposed collection of information, including the validity of the methodology and assumptions used; (3) Ways to enhance the quality, utility, and clarity of the information to be collection; and (4) Ways to minimize the burden of the collection of information on those who are to respond, including the use of appropriate automated, electric, mechanical, or other technical collection techniques or other forms of information technology.

FOR FURTHER INFORMATION CONTACT: To request more information on the proposed project or to obtain a copy of the data collection plans and instruments, contact Dr. Bridget Grant, Chief, Biometry Branch, Division of Biometry and Epidemiology, NIAAA, NIH, Willco Building, Suite 514, 6000 Executive Boulevard, Bethesda, Maryland 20892–7003, or call non-toll-free number (301) 443–7370 or E-mail your request, including your address to *Bgrant@willco.niaaa.nih.gov.*

Comments Due Date:

Comments regarding this information collection are best assured of having their full effect if received on or before December 18, 2000.

Dated: October 4, 2000.

Stephen Long,

Executive Officer, NIAAA.

[FR Doc. 00–26583 Filed 10–16–00; 8:45 am]

BILLING CODE 4140–01–M

DEPARTMENT OF HEALTH AND HUMAN SERVICES

National Institutes of Health

Proposed Collection; Comment Requested; Evaluation of National Youth Anti-Drug Media Campaign

SUMMARY: In compliance with section 3506(c)(2)(A) of the Paperwork Reduction Act of 1995, for opportunity for public comment on proposed data collection projects, the National Institute on Drug Abuse of the National Institutes of Health will publish periodic summaries of proposed projects to be submitted to the Office of Management and Budget for review and approval.

Proposed Collection

Title: Evaluation of National Youth Anti-Drug Media Campaign. *Type of Information Collection Request:* Revision. *Need and Use of Information Collection:* In 1998, the White House Office of National Drug Control Policy transferred funds to NIDA to conduct an independent, scientifically designed and implemented evaluation of the National Youth Anti-Drug Media Campaign, the first prevention campaign to use paid advertising to discourage youth from drug use. The study is assessing the outcomes and impact of the national campaign in reducing illegal drug use among children and adolescents.

In the first year, two surveys were conducted: (1) The National Survey of Parents and Youth (NSPY), a cross-sectional household survey; and (2) the Community Longitudinal Study of Parents and Youth (CLSPY) in four communities with an ethnographic component. The purpose of this revision is to discontinue the CLSPY and incorporate its longitudinal component into the NSPY to maximize resources and strengthen analytic ability. The revised NSPY will be the first to measure the effectiveness of a media campaign by following a large nationally-representative cohort of parents and children from the same household as they are exposed to a media campaign over time. All data will continue to be collected using a combination of computer-assisted personal interviews (CAPI) and audio computer-assisted self-interviews (ACASI). The findings form the basis of semiannual and annual reports on campaign progress. These reports provide assistance in improving the national campaign, and will help to establish a rich data base of information about the process involved in changing

attitudes and behaviors by the mass media.

Frequency of Response: The revised NSPY data collection will continue over a four-year period, ending in June 2003. Each data collection wave will last approximately 6 months. *Affected public:* Individuals and households. *Type of Respondents:* Children and parents. The annual reporting burden, which will drop substantially from the original design, is as follows:

RESPONDENT AND BURDEN ESTIMATE

Type of respondents	Estimated number of respondents	Estimated number of responses per respondent	Average burden hours per response	Estimated total burden hours requested	Estimated annualized burden 1/1/01–5/31/02
Revised National Survey of Youth and Parents (Baseline 1/1/01–5/31/01)					
Screener Respondent	15,498	1	.06	930	[1] 620
Youth 9–11	738	1	.60	443	[1] 295
Teens 12–18	1,189	1	.73	868	[1] 579
Parents	1,369	1	.92	1,259	[1] 840
National Survey of Parents and Youth (Longitudinal 1/1/01–5/31/02)					
Screener Respondent	4,739	1.2	.06	341	[3] 227
Youth 9–11	1,403	1.2	.60	1,010	[3] 673
Adolescents 12–18	4,553	1.2	.90	3,934	[3] 2,622
Parents	4,334	1.2	.90	4,680	[3] 3,120
Total	[2] 33,823	.....	.26	13,465	8,976

[1] Interviewing of revised NSPY baseline respondents begins 1/01; earlier baseline data collected from 11/99–12/00.
[2] Some number of screener respondents are later also selected for a parent interview. The exact overlapping proportion cannot be estimated at this time.
[3] Follow-up of NSPY respondents from the earlier baseline data collected (11/99–12/00) begins 1/01.

There are no Capital Costs to report. There are no Operating or Maintenance Costs to report. Because of the sensitivity of collecting data from families in households involving children as young as 9 years old, and the importance of minimizing costs for repetitive, return visits to obtain respondent cooperation, IDA provides a reasonable cost incentive to reimburse respondents for their time, as approved by OMB.

REQUEST FOR COMMENTS: Written comments and/or suggestions from the public and affected agencies are invited on one or more of the following points: (1) Whether the proposed revision in the data collection is necessary for the proper performance of the function of the agency, including whether the information will have practical utility; (2) The accuracy of the agency's estimate of the burden of the proposed revision, including the validity of the methodology and assumptions used; (3) Ways to enhance the quality, utility, and clarity of the information to be collected; and (4) Ways to minimize the burden of the collection of information on those who are to respond, including the use of appropriate automated, electronic, mechanical, or other technological collection techniques or other forms of information technology.

FOR FURTHER INFORMATION CONTACT: To request more information on the proposed project or to obtain a copy of the data collection plans and instruments, contact Susan David, Project Officer; Division of Services, Epidemiology and Prevention Research, National Institute on Drug Abuse, Room 5153, MSC 9589, 6001 Executive Blvd., Bethesda, MD 20892–9589; or call non-toll-free number (301) 443–6504; or fax to (301) 443–2636; or email your request, including your address, to: Sdavid@nida.nih.gov.

COMMENTS DUE DATE: Comments regarding this information collection are best assured of having their full effect if received on or before December 18, 2000.

Dated: October 2, 2000.

Laura Rosenthal,

Executive Officer, NIDA.

[FR Doc. 00–26584 Filed 10–16–00; 8:45 am]

BILLING CODE 4140–01–M

DEPARTMENT OF HEALTH AND HUMAN SERVICES

National Institutes of Health

Government-Owned Inventions; Availability for Licensing

AGENCY: National Institutes of Health, Public Health Service, DHHS.

ACTION: Notice.

SUMMARY: The inventions listed below are owned by agencies of the U.S. Government and are available for licensing in the U.S. in accordance with 35 U.S.C. 207 to achieve expeditious commercialization of results of federally-funded research and development. Foreign patent applications are filed on selected inventions to extend market coverage for companies and may also be available for licensing.

ADDRESSES: Licensing information and copies of the U.S. patent applications listed below may be obtained by writing to the indicated licensing contact at the Office of Technology Transfer, National Institutes of Health, 6011 Executive Boulevard, Suite 325, Rockville, Maryland 20852–3804; telephone: 301/496–7057; fax: 301/402–0220. A signed Confidential Disclosure Agreement will be required to receive copies of the patent applications.

Virus-Like Particles as Unlinked Adjuvants

John Schiller, Bryce Chackerian, Joseph Lee, Douglas Lowy (NCI), DHHS Reference No. E–231–00/0 filed 20 Jul 2000.

Licensing Contact: Peter Soukas; 301/496–7056 ext. 268; e-mail: soukasp@od.nih.gov

This invention claims immunostimulating or vaccine compositions in which non-infectious virus-like particles (VLPs) serve as unlinked adjuvants. Co-administration of VLPs with an antigen enhances induction of high titer IgG antibodies to self or foreign antigens and promotes T cell responses to foreign antigens. The

VLP-target antigen combination can be administered alone or with a traditional adjuvant. The VLPs of the current invention are contemplated to comprise capsid protein(s) of a virus assembled into a shell resembling a virion, but not containing pathogenic viral DNA or RNA. The VLPs are unlinked, rather than physically linked to the antigen because this may reduce the manufacturing complexity of the vaccine. Unlinked VLP adjuvants, for example papillomavirus VLPs, of the invention have a number of advantages: (1) They are non-inflammatory in humans, (2) are potent at amplifying IgG antibody responses to self antigens, (3) induce a pronounced Th1 type of T cell response, and (4) may provide two-fold protection, against the virus corresponding to the VLP type, as well as against the disease associated with the other component in the VLP-target antigen combination.

System and Method for Representing Knowledge in a Distributed System

Stephen J. Shaw (NCI), Serial No. 09/470,684 filed 23 Dec 1999.
Licensing Contact: Dale Berkley; 301/496–7735 ext. 223; e-mail: berkleyd@od.nih.gov

This invention relates to a knowledge base (KB) system for storing data in a computer system. More specifically, this invention relates to systems and methods for representing, manipulating, and displaying knowledge consisting of categories, entities and relationships stored in a plurality of databases. The invention contemplates providing a user-friendly computer-based distributed system of databases which enables its users to create, use and share a knowledge base of information consisting of diverse entities related to each other by semantically meaningful links. The system generates a knowledge base that allows individuals to store information on a virtually unlimited range of entities. Due to its design as a distributed system, it is well suited to preserve the autonomy and portability of data belonging to each individual and workgroup, while maintaining links of that data to publicly available data elsewhere in the system and even links to information on entities external to the system. Diverse strategies are employed to simplify the implementation and use of the system. Some unique features of this software-based invention are: (1) The ability to handle any number of conceptually distinct categories of items (such as people, events, institutions, tasks, concepts, processes, document types); (2) tools for creating relationships between any two or more objects, with the ability to categorize types of relationships and decide which categories they apply to; (3) use of parent-child relationships to organize, view and navigate information; (4) flexibility in adding diverse categories of objects and relationships, while maintaining a simple underlying data structure and programming environment; and (5) the ability to view complex relationships in flexible and informative ways; (6) tools for managing names which are indispensable for finding the relevant objects; and (7) efficient ways to search information and filter retrievals to limit to relevant information.

Peptides that Stabilize Protein Antigens and Enhance Presentation to CD8+ T Cells

Roger Kurlander, Elizabeth Chao, Janet Fields (CC), DHHS Reference No. E–172–99/0 filed 06 Dec 1999.
Licensing Contact: Peter Soukas; 301/496–7056, ext. 268; e-mail: soukasp@od.nih.gov

This invention relates to compositions and methods for stabilizing an antigen against proteolytic degradation and enhancing its presentation to CD8+ cells. The invention claims ''fusion agents,'' isolated molecules comprising a hydrophobic peptide joined to an epitope to which a CD8+ T cell response is desired. Also claimed in the invention are the nucleic acid sequences that encode the fusion agents.

Recently, there has been great interest in developing vaccines to induce protective CD8+ T cell responses, however, there are practical obstacles to this goal. Although purified antigenic peptides are effectively presented *in vitro*, introduced in a purified form they often do not stimulate effective T cell responses *in vivo* because the antigens are insufficiently immunogenic and too easily degraded. Adjuvants or infectious ''carriers'' often can enhance these immune responses, however, these added agents can cause unacceptable local or systemic side effects. The present invention increases antigen stability and promotes *in vivo* responses in the absence of an adjuvant or active infection.

The invention describes three variants of lemA, an antigen recognized by CD8+ cells in mice infected with *Listeria monocytogenes.* The antigenic and stabilizing properties of lemA can be accounted for by the covalent association of the immunogenic aminoterminal hexapeptide with the protease resistant scaffolding provided by amino acids 7 to 33 of the lemA sequence ($lemA_{(7–33)}$). Variants t-lemA, and s-lemA bearing an antigenic sequence immediately preceding $lemA_{(7–33)}$, and lemS containing an immunogenic sequence immediately after $lemA_{(7–33)}$, each induce a CD8+ T cell response and protect the crucial immunogenic oligopeptide from protease degradation. The site of antigen insertion relative to $lemA_{(7–33)}$ can influence antigen processing by preferentially promoting processing either in the cytoplasm or endosomal compartment. Therefore, several embodiments of the invention involve the construction of antigen processing protein molecules and their methods of use. Alternatively, a DNA sequence coding $lemA_{(7–33)}$ may be inserted at an appropriate site to enhance the immunogenicity of the antigenic element coded by a DNA vaccine. In sum, this invention is an attractive, nontoxic alternative to protein/adjuvant combinations in eliciting CD8 responses *in vivo* and a useful element for enhancing the efficiency with which products coded by DNA vaccines are processed and presented *in vivo.* Because $lemA_{(7–33)}$ is particularly effective in protecting oligopeptides from proteases, this invention may have particular usefulness in enhancing local T cell at sites such as mucosal surfaces where there may be high proteolytic activity.

For more specific information about the invention or to request a copy of the patent application, please contact Peter Soukas at the telephone number or e-mail listed above. Additionally, please see a related article published in the Journal of Immunology at: 1999;163:6741–6747.

Major Neutralization Site of Hepatitis E Virus and Use of this Neutralization Site in Methods of Vaccination

Darren Schofield, Suzanne U. Emerson, Robert H. Purcell (NIAID), DHHS Reference No. E–043–00/0 filed 01 Dec 1999.
Licensing Contact: Carol Salata; 301/496–7735 ext. 232; e-mail: salatac@od.nih.gov

Hepatitis E is endemic in many countries throughout the developing world, in particular on the continents of Africa and Asia. The disease generally affects young adults and has a very high mortality rate, up to 20%, in pregnant women. This invention relates to the identification of a neutralization site of hepatitis E virus (HEV) and neutralizing antibodies that react with it. The neutralization site is located on a polypeptide from the ORF2 gene (capsid gene) of HEV. This neutralization site was identified using a panel of chimpanzee monoclonal antibodies that are virtually identical to human antibodies. Since this neutralization site

is conserved among genetically divergent strains of HEV, the neutralizing monoclonal antibodies may be useful in the diagnosis, treatment and/or prevention of hepatitis E. Furthermore, immunogens that encompass this neutralization site may be used in vaccination to effectively prevent, and/or reduce the incidence of HEV infection. Polypeptides containing this neutralization site may be useful in evaluating vaccine candidates for the production of neutralizing antibodies to HEV.

Viral Glycoprotein Subunit Vaccine

Richard Compans, Ranjit Ray, U.S. Patent 4,790,987 issued 13 Dec 1988.

Licensing Contact: Peter Soukas; 301/496–7056 ext. 268; e-mail: soukasp@od.nih.gov

The present invention relates to a vaccine composition useful in the prevention of virus-caused disease comprising as its active agent at least one immunogenically effective amount of immunogenic viral envelope glycoprotein complexed with a lipid. These subunit vaccine compositions are useful for the prevention of viral infections including influenza virus, parainfluenza virus, herpes virus, paramyxoviruses, rabies virus, and human T-cell lymphotrophic viruses. The patent also discloses a method for preparing the vaccine compositions. A novel feature of the invention is the utilization of a dialyzable detergent for solubilization of the active component, which allows a relatively simple purification process on a large scale. Thus, these vaccines are easier to prepare than other glycoprotein subunit vaccines and retain their antigenicity to a greater extent than formalin-inactivated subunit vaccines.

Dated: October 5, 2000.

Jack Spiegel,

Director, Division of Technology Development and Transfer, Office of Technology Transfer, National Institutes of Health.

[FR Doc. 00–26585 Filed 10–16–00; 8:45 am]

BILLING CODE 4140–01–P

DEPARTMENT OF HEALTH AND HUMAN SERVICES

National Institutes of Health

National Center for Research Resources; Notice of Closed Meeting

Pursuant to section 10(d) of the Federal Advisory Committee Act, as amended (5 U.S.C. Appendix 2), notice is hereby given of the following meeting.

The meeting will be closed to the public in accordance with the provisions set forth in sections 552b(c)(4) and 552b(c)(6), Title 5 U.S.C., as amended. The grant applications and the discussions could disclose confidential trade secrets or commercial property such as patentable material, and personal information concerning individuals associated with the grant applications, the disclosure of which would constitute a clearly unwarranted invasion of personal privacy.

Name of Committee: National Center for Research Resources Special Emphasis Panel Comparative Medicine.

Date: October 24, 2000.

Time: 3 pm to 4 pm.

Agenda: To review and evaluate grant applications.

Place: Office of Review, National Center for Research Resources, 6705 Rockledge Drive, Bethesda, MD 20892, (Telephone Conference Call).

Contact Person: Sybil A. Wellstood, PhD, Scientific Review Administrator, Office of Review, National Center for Research Resources, 6705 Rockledge Drive, MSC 7965, Room 6018, Bethesda, MD 20892–7965, 301–435–0814.

This notice is being published less than 15 days prior to the meeting due to the timing limitations imposed by the review and funding cycle.

(Catalogue of Federal Domestic Assistance Program Nos. 93.306, Comparative Medicine, 93.306; 93.333, Clinical Research, 93.333; 93.371, Biomedical Technology; 93.389, Research Infrastructure, National Institutes of Health, HHS)

Dated: October 5, 2000.

LaVerne Y. Stringfield,

Director, Office of Federal Advisory Committee Policy.

[FR Doc. 00–26569 Filed 10–16–00; 8:45 am]

BILLING CODE 4140–01–M

DEPARTMENT OF HEALTH AND HUMAN SERVICES

National Institutes of Health

National Center for Research Resources; Notice of Closed Meeting

Pursuant to section 10(d) of the Federal Advisory Committee Act, as amended (5 U.S.C. Appendix 2), notice is hereby given of the following meeting.

The meeting will be closed to the public in accordance with the provisions set forth in sections 552b(c)(4) and 552b(c)(6), Title 5 U.S.C., as amended. The grant applications and the discussions could disclose confidential trade secrets or commercial property such as patentable material, and personal information concerning individuals associated with the grant applications, the disclosure of which would constitute a clearly unwarranted invasion of personal privacy.

Name of Committee: National Center for Research Resources Special Emphasis Panel, Comparative Medicine.

Date: October 27, 2000.

Time: 3 p.m. to 4 p.m.

Agenda: To review and evaluate grant applications.

Place: Office of Review, National Center for Research Resources, 6705 Rockledge Drive, Bethesda, MD 20892, (Telephone Conference Call).

Contact Person: Sybil A. Wellstood, PHD, Scientific Review Administrator, Office of Review, National Center for Research Resources, 6705 Rockledge Drive, MSC 7965, Room 6018, Bethesda, MD 20892–7965, 301–435–0814.

This notice is being published less than 15 days prior to the meeting due to the timing limitations imposed by the review and funding cycle.

(Catalogue of Federal Domestic Assistance Program Nos. 93.306, Comparative Medicine, 93.306; 93.333, Clinical Research, 93.333; 93.371, Biomedical Technology; 93.389, Research Infrastructure, National Institutes of Health, HHS)

Dated: October 4, 2000.

LaVerne Y. Stringfield,

Director, Office of Federal Advisory Committee Policy.

[FR Doc. 00–26573 Filed 10–16–00; 8:45 am]

BILLING CODE 4140–01–M

DEPARTMENT OF HEALTH AND HUMAN SERVICES

National Institutes of Health

National Human Genome Research Institute; Notice of Closed Meetings

Pursuant to section 10(d) of the Federal Advisory Committee Act, as amended (5 U.S.C. Appendix 2), notice is hereby given of the following meetings.

The meetings will be closed to the public in accordance with the provisions set forth in sections 552b(c)(4) and 552b(c)(6), Title 5 U.S.C., as amended. The grant applications and the discussions could disclose confidential trade secrets or commercial property such as patentable material, and personal information concerning individuals associated with the grant applications, the disclosure of which would constitute a clearly unwarranted invasion of personal privacy.

Name of Committee: National Human Genome Research Institute Special Emphasis Panel.

Date: October 27, 2000.

Time: 8 a.m. to 6 p.m.

Agenda: To review and evaluate grant applications.

Place: Bethesda Holiday Inn, 8120 Wisconsin Avenue, Bethesda, MD 20814.

Contact Person: Ken D. Nakamura, PhD, Scientific Review Administrator, Office of Scientific Review, National Human Genome Research Institute, National Institutes of Health, MD 20892, 301–402–0838.

This notice is being published less than 15 days prior to the meeting due to the timing limitations imposed by the review and funding cycle.

Name of Committee: National Human Genome Research Institute Initial Review Group, Genome Research Review Committee.

Date: November 13, 2000.

Time: 9 a.m. to 2 p.m.

Agenda: To review and evaluate grant applications.

Place: Arlington Hyatt, 1325 Wilson Boulevard, Arlington, VA 22209.

Contact Person: Rudy O. Pozzatti, Scientific Review Administrator, Office of Scientific Review, National Human Genome Research Institute, National Institutes of Health, Bethesda, MD 20892, 301–402–0838.

(Catalogue of Federal Domestic Assistance Program Nos. 93.172, Human Genome Research, National Institutes of Health, HHS)

Dated: October 6, 2000.

LaVerne Y. Stringfield,

Director, Office of Federal Advisory Committee Policy.

[FR Doc. 00–26574 Filed 10–16–00; 8:45 am]

BILLING CODE 4140–01–M

DEPARTMENT OF HEALTH AND HUMAN SERVICES

National Institutes of Health

National Institute on Alcohol Abuse and Alcoholism; Notice of Closed Meetings

Pursuant to section 10(d) of the Federal Advisory Committee Act, as amended (5 U.S.C. Appendix 2), notice is hereby given of the following meetings.

The meetings will be closed to the public in accordance with the provisions set forth in sections 552b(c)(4) and 552b(c)(56), Title 5 U.S.C., as amended. The grant applications and the discussions could disclose confidential trade secrets or commercial property such as patentable material, and personal information concerning individuals associated with the grant applications, the disclosure of which would constitute a clearly unwarranted invasion of personal privacy.

Name of Committee: National Institute on Alcohol Abuse and Alcoholism Special Emphasis Panel.

Date: October 12, 2000.

Time: 12 p.m. to 1 p.m.

Agenda: To review and evaluate grant applications.

Place: Willco Building, Suite 409, 6000 Executive Boulevard, Rockville, MD 20892, (Telephone Conference Call).

Contact Person: Mark R. Green, PhD, Chief, Extramural Project Review Branch, National Institute on Alcohol Abuse and Alcoholism, National Institutes of Health, Suite 409, 6000 Executive Blvd., Bethesda, MD 20892, 301–443–2860, mgreen@niaaa.nih.gov.

This notice is being published less than 15 days prior to the meeting due to the timing limitations imposed by the review and funding cycle.

Name of Committee: National Institute on Alcohol Abuse and Alcoholism Special Emphasis Panel.

Date: November 6, 2000.

Time: 9:00 a.m. to 5:00 p.m.

Agenda: To review and evaluate grant applications.

Place: Courtyard By Marriott, 805 Russell Avenue, Gaithersburg, MD 20879.

Contact Person: Terri B. Pike, BS, Grants Technical Assistant, Extramural Project Review Branch, National Institute on Alcohol Abuse and Alcoholism, National Institutes of Health, Suite 409, 6000 Executive Blvd., Bethesda, MD 20892–7003, 301–443–4623, tpike@niaaa.nih.gov.

Name of Committee: National Institute on Alcohol Abuse and Alcoholism Special Emphasis Panel.

Date: December 8, 2000.

Time: 8 a.m. to 6 p.m.

Agenda: To review and evaluate grant applications.

Place: Double Tree Hotel, 1750 Rockville Pike, Rockville, MD 20852.

Contact Person: Ronald Suddendorf, PhD, Scientific Review Administrator, Extramural Project Review Branch, National Institute on Alcohol Abuse and Alcoholism, National Institutes of Health, Suite 409, 6000 Executive Boulevard, Bethesda, MD 20892–7003, 301–443–2926.

(Catalogue of Federal Domestic Assistance Program Nos. 93.271, Alcohol Research Career Development Awards for Scientists and Clinicians; 93.272, Alcohol National Research Service Awards for Research Training; 93.273, Alcohol Research Programs; 93.891, Alcohol Research Center Grants, National Institutes of Health, HHS)

Dated: October 4, 2000.

LaVerne Y. Stringfield,

Director, Office of Federal Advisory Committee Policy.

[FR Doc. 00–26571 Filed 10–16–00; 8:45 am]

BILLING CODE 4140–01–M

DEPARTMENT OF HEALTH AND HUMAN SERVICES

National Institutes of Health

National Institute of Mental Health; Notice of Closed Meeting

Pursuant to section 10(d) of the Federal Advisory Committee Act, as amended (5 U.S.C. Appendix 2), notice is hereby given of the following meeting.

The meeting will be closed to the public in accordance with the provisions set forth in sections 552b(c)(4) and 552b(c)(6), Title 5 U.S.C., as amended. The grant applications and the discussions could disclose confidential trade secrets or commercial property such as patentable material, and personal information concerning individuals associated with the grant applications, the disclosure of which would constitute a clearly unwarranted invasion of personal privacy.

Name of Committee: National Institute of Mental Health Special Emphasis Panel.

Date: October 24–25, 2000.

Time: 8:30 am to 5:00 pm.

Agenda: To review and evaluate grant applications.

Place: Ramada Inn, 8400 Wisconsin Avenue, Bethesda, MD 20814.

Contact Person: Henry J. Haigler, PHD, Scientific Review Administrator, Division of Extramural Activities, National Institute of Mental Health, NIH, Neuroscience Center, 6001 Executive Blvd., Rm. 6150, MSC 9608, Bethesda, MD 20892–9608, 301/443–7216.

This notice is being published less than 15 days prior to the meeting due to the timing limitations imposed by the review and funding cycle.

(Catalogue of Federal Domestic Assistance Program Nos. 93.242, Mental Health Research Grants; 93.281, Scientist Development Award, Scientist Development Award for Clinicians, and Research Scientist Award; 93.282, Mental Health National Research Service Awards for Research Training, National Institutes of Health, HHS)

Dated: October 4, 2000.

LaVerne Y. Stringfield,

Director, Office of Federal Advisory Committee Policy.

[FR Doc. 00–26572 Filed 10–16–00; 8:45 am]

BILLING CODE 4140–01–M

DEPARTMENT OF HEALTH AND HUMAN SERVICES

National Institutes of Health

National Institute of Neurological Disorders and Stroke; Notice of Closed Meetings

Pursuant to section 10(d) of the Federal Advisory Committee Act, as amended (5 U.S.C. Appendix 2), notice is hereby given of the following meetings.

The meetings will be closed to the public in accordance with the provisions set forth in sections 552b(c)(4) and 552b(c)(6), Title 5 U.S.C., as amended. The grant applications and the discussions could disclose confidential trade secrets or commercial property such as patentable material, and personal information concerning individuals associated with the grant

applications, the disclosure of which would constitute a clearly unwarranted invasion of personal privacy.

Name of Committee: National Institute of Neurological Disorders and Stroke Special Emphasis Panel.

Date: October 19–20, 2000.

Time: 8:30 a.m. to 6 p.m.

Agenda: To review and evaluate grant applications.

Place: Ramada Inn, 1775 Rockville Pike, Rockville, MD 20852.

Contact Person: Katherine Woodbury, PhD, Scientific Review Administrator, Scientific Review Branch, NINDS/NIH/DHHS, Neuroscience Center, 6001 Executive Blvd., Suite 3208, MSC 9529, Bethesda, MD 20892–9529, 301–496–9223.

This notice is being published less than 15 days prior to the meeting due to the timing limitations imposed by the review and funding cycle.

Name of Committee: National Institute of Neurological Disorders and Stroke Special Emphasis Panel.

Date: October 24, 2000.

Time: 2 p.m. to 4 p.m.

Agenda: To review and evaluate grant applications.

Place: Neuroscience Center, National Institutes of Health, 6001 Executive Blvd., Bethesda, MD 20892 (Telephone Conference Call).

Contact Person: Lillian M. Pubols, PhD, Chief, Scientific Review Branch, NINDS/NIH/DHHS, Neuroscience Center, 6001 Executive Blvd., Suite 3208, MSC 9529, Bethesda, MD 20892–9529, 301–496–9223, lp28e@nih.gov

Name of Committee: National Institute of Neurological Disorders and Stroke Special Emphasis Panel.

Date: November 27, 2000.

Time: 8:30 a.m. to 5 p.m.

Agenda: To review and evaluate grant applications.

Place: Double Tree Hotel, 1750 Rockville Pike, Rockville, MD 20852.

Contact Person: Katherine Woodbury, PhD, Scientific Review Administrator, Scientific Review Branch, NINDS/NIH/DHHS, Neuroscience Center, 6001 Executive Blvd., Suite 3208, MSC 9529, Bethesda, MD 20892–9529 301–496–9223.

Name of Committee: National Institute of Neurological Disorders and Stroke Special Emphasis Panel.

Date: November 28, 2000.

Time: 8 a.m. to 4 p.m.

Agenda: To review and evaluate grant applications.

Place: Double Tree Hotel, 1750 Rockville Pike, Rockville, MD 20853.

Contact Person: Alan L. Willard, PhD, Scientific Review Administrator, Scientific Review Branch, NINDS/NIH/DHHS, Neuroscience Center, 6001 Executive Blvd., Suite 3208, MSC 9529, Bethesda, MD 20892–9529, 301–496–9223.

Name of Committee: National Institute of Neurological Disorders and Stroke Special Emphasis Panel.

Date: December 8, 2000.

Time: 8:30 a.m. to 5 p.m.

Agenda: To review and evaluate grant applications.

Place: Capitol Holiday Inn, C and 6th Street, SW., Washington, DC 20024.

Contact Person: Raul A. Saavedra, PhD, Scientific Review Administrator, Scientific Review Branch, Division of Extramural Research, NINDS/NIH/DHHS, Neuroscience Center, 6001 Executive Blvd., Suite 3208, MSC 9529, Bethesda, MD 20892–9529, 301–496–9223.

(Catalogue of Federal Domestic Assistance Program Nos. 93.853, Clinical Research Related to Neurological Disorders; 93.854, Biological Basis Research in the Neurosciences, National Institutes of Health, HHS)

Dated: October 6, 2000.

LaVerne Y. Stringfield,

Director, Office of Federal Advisory Committee Policy.

[FR Doc. 00–26576 Filed 10–16–00; 8:45 am]

BILLING CODE 4140–01–M

DEPARTMENT OF HEALTH AND HUMAN SERVICES

National Institutes of Health

National Institute of Child Health and Human Development; Notice of Closed Meeting

Pursuant to section 10(d) of the Federal Advisory Committee Act, as amended (5 U.S.C. Appendix 2), notice is hereby given of the following meeting.

The meeting will be closed to the public in accordance with the provisions set forth in sections 552b(c)(4) and 552b(c)(6), Title 5 U.S.C., as amended. The grant applications and the discussions could disclose confidential trade secrets or commercial property such as patentable material, and personal information concerning individuals associated with the grant applications, the disclosure of which would constitute a clearly unwarranted invasion of personal privacy.

Name of Committee: National Institute of Child Health and Human Development Initial Review Group, Medical Rehabilitation Research Subcommittee.

Date: October 23–24, 2000.

Time: 8 am to 5 pm.

Agenda: To review and evaluate grant applications.

Place: Woodfin Suites Hotel, Conference Room, 1380 Piccard Drive, Rockville, MD 20850.

Contact Person: Anne Krey, Scientific Review Administrator, Division of Scientific Review, National Institute of Child Health, and Human Development, National Institutes of Health, 6100 Executive Blvd., Rm. 5E03, Bethesda, MD 20892, 301–435–6908.

This notice is being published less than 15 days prior to the meeting due to the timing limitations imposed by the review and funding cycle.

(Catalogue of Federal Domestic Assistance Program Nos. 93.209, Contraception and Infertility Loan Repayment Program; 93.864, Population Research; 93.865, Research for Mothers and Children; 93.929, Center for Medical Rehabilitation Research, National Institutes of Health, HHS)

Dated: October 6, 2000.

Anna P. Snouffer,

Acting Director, Office of Federal Advisory Committee Policy.

[FR Doc. 00–26579 Filed 10–16–00; 8:45 am]

BILLING CODE 4140–01–M

DEPARTMENT OF HEALTH AND HUMAN SERVICES

National Institutes of Health

National Institute of Child Health and Human Development; Notice of Closed Meeting

Pursuant to section 10(d) of the Federal Advisory Committee Act, as amended (5 U.S.C. Appendix 2), notice is hereby given of the following meeting.

The meeting will be closed to the public in accordance with the provisions set forth in sections 552b(c)(4) and 552b(c)(6), Title 5 U.S.C., as amended. The grant applications and the discussions could disclose confidential trade secrets or commercial property such as patentable material, and personal information concerning individuals associated with the grant applications, the disclosure of which would constitute a clearly unwarranted invasion of personal privacy.

Name of Committee: National Institute of Child Health and Human Development Initial Review Group, Mental Retardation Research Subcommittee, Mental Retardation Research Subcommittee.

Date: October 19–20, 2000.

Time: 7:30 am to 5 pm.

Agenda: To review and evaluate grant applications.

Place: Georgetown Suites, 1000 29th Street, N.W., Washington, DC 20007.

Contact Person: Norman Chang, PhD, Scientific Review Administrator, National Institute of Child Health and Human Development, National Institutes of Health, PHS, DHHS, Bethesda, MD 20892.

This notice is being published less than 15 days prior to the meeting due to the timing limitations imposed by the review and funding cycle.

(Catalogue of Federal Domestic Assistance Program Nos. 93.209, Contraception and Infertility Loan Repayment Program; 93.864, Population Research; 93.865, Research for Mothers and Children; 93.929, Center for Medical Rehabilitation Research, National Institutes of Health, HHS)

Dated: October 6, 2000.

Anna P. Snouffer,

Acting Director, Office of Federal Advisory Committee Policy.

[FR Doc. 00–26580 Filed 10–16–00; 8:45 am]

BILLING CODE 4140–01–M

DEPARTMENT OF HEALTH AND HUMAN SERVICES

National Institutes of Health

National Library of Medicine; Notice of Meeting

Pursuant to section 10(d) of the Federal Advisory Committee Act, as amended (5 U.S.C. Appendix 2), notice is hereby given of the following meeting.

The meeting will be open to the public as indicated below, with attendance limited to space available. Individuals who plan to attend and need special assistance, such as sign language interpretation or other reasonable accommodations, should notify the Contact Person listed below in advance of the meeting.

The meeting will be closed to the public in accordance with the provisions set forth in sections 552b(c)(4) and 552b(c)(6), Title 5 U.S.C., as amended. The grant applications and the discussions could disclose confidential trade secrets or commercial property such as patentable material, and personal information concerning individuals associated with the grant applications, the disclosure of which would constitute a clearly unwarranted invasion of personal privacy.

Name of Committee: Biomedical Library Review Committee.

Date: November 1–2, 2000.

Closed: November 1, 2000, 8:30 am to 11:30 am.

Agenda: To review and evaluate grant applications.

Place: National Library of Medicine, Board Room, Bldg 38, 2E–09, 8600 Rockville Pike, Bethesda, MD 20894.

Open: November 1, 2000, 11:30 am to 1:30 pm.

Agenda: Administrative Reports and Program Development.

Place: National Library of Medicine, Board Room, Bldg 38, 2E–09, 8600 Rockville Pike, Bethesda, MD 20894.

Closed: November 1, 2000, 1:30 pm to 5:30 pm.

Agenda: To review and evaluate grant applications.

Place: National Library of Medicine, Board Room, Bldg 38, 2E–09, 8600 Rockville Pike, Bethesda, MD 20894.

Open: November 2, 2000, 8:30 am to 9 am.

Agenda: Administrative Reports and Program Development.

Place: National Library of Medicine, Board Room, Bldg 38, 2E–09, 8600 Rockville Pike, Bethesda, MD 20894.

Closed: November 2, 20900, 9 am to 1:30 pm.

Agenda: To review and evaluate grant applications.

Place: National Library of Medicine, Board Room, Bldg 38, 2E–09, 8600 Rockville Pike, Bethesda, MD 20894.

Contact Person: Sharee Pepper, PHD, Scientific Review Administrator, Heath Scientist Administrator, Office of Extramural Programs, National Library of Medicine, 6705 Rockledge Drive, Suite 301, Bethesda, MD 20892, (301) 594–4933.

(Catalogue of Federal Domestic Assistance Program No. 93.879, Medical Library Assistance, National Institutes of Health, HHS)

Dated: October 4, 2000.

LaVerne Y. Stringfield,

Director, Office of Federal Advisory Committee Policy.

[FR Doc. 00–26570 Filed 10–16–00; 8:45 am]

BILLING CODE 4140–01–M

DEPARTMENT OF HEALTH AND HUMAN SERVICES

National Institutes of Health

Center for Scientific Review; Notice of Closed Meetings

Pursuant to section 10(d) of the Federal Advisory Committee Act, as amended (5 U.S.C. Appendix 2), notice is hereby given of the following meetings.

The meetings will be closed to the public in accordance with the provisions set forth in sections 552b(c)(4) and 552b(c)(6), Title 5 U.S.C., as amended. The grant applications and the discussions could disclose confidential trade secrets or commercial property such as patentable material, and personal information concerning individuals associated with the grant applications, the disclosure of which would constitute clearly unwarranted invasion of personal privacy.

Name of Committee: Pathophysiological Sciences Integrated Review Group, Alcohol and Toxicology Subcommittee 4.

Date: October 23–24, 2000.

Time: 8 a.m. to 6 p.m.

Agenda: To review and evaluate grant applications.

Place: Chevy Chase Holiday Inn, 5520 Wisconsin Ave., Chevy Chase, MD 20815.

Contact Person: Mushtaq A. Khan, DVM, Scientific Review Administrator, Center for Scientific Review, National Institutes of Health, 6701 Rockledge Drive, Room 2176, MSC 7818, Bethesda, MD 20892; (301) 435–1778, khanm@csr.nih.gov.

Name of Committee: Musculoskeletal and Dental Sciences Integrated Review Group, Oral Biology and Medicine Subcommittee 2.

Date: October 23–24, 2000.

Time: 8 a.m. and 5 p.m.

Agenda: To review and evaluate grant applications.

Place: Holiday Inn Old Town Alexandria; 480 King Street, Alexandria, VA 22314.

Contact Person: Priscilla Chen, Scientific Review Administrator, Center for Scientific Review, National Institutes of Health, 6701 Rockledge Drive, Room 4104, MSC 7814, Bethesda, MD 20892, (301) 435–1787.

Name of Committee: Musculoskeletal and Dental Sciences Integrated Review Group, Orthopedics and Musculoskeletal Study Section.

Date: October 23–24, 2000.

Time: 8 a.m. to 5 p.m.

Agenda: To review and evaluate grant applications.

Place: Gaithersburg Holiday Inn, Gaithersburg, MD 20879.

Contact Person: Daniel F. McDonald, Scientific Review Administrator, Center for Scientific Review, National Institutes of Health, 6701 Rockledge Drive, Room 4214, MSC 7814, Bethesda, MD 20892; (301) 435–1215.

Name of Committee: Cardiovascular Sciences Integrated Review Group, Experimental Cardiovascular Sciences Study Section.

Date: October 23–24, 2000.

Time: 8 a.m. to 2:30 p.m.

Agenda: To review and evaluate grant applications.

Place: Bethesda Holiday Inn, Bethesda, MD 20017.

Contact Person: Anshumali Chaudhari, Scientific Review Administrator, Center for Scientific Review, National Institutes of Health, 6701 Rockledge Drive, Room 4124, MSC 7802, Bethesda, MD 20892; (301) 435–1210.

Name of Committee: Center for Scientific Review Special Emphasis Panel.

Date: October 23–24, 2000.

Time: 8 a.m. to 6 p.m.

Agenda: To review and evaluate grant applications.

Place: Holiday Inn, 8120 Wisconsin Avenue, Bethesda, MD 20814.

Contact Person: Nadarajen A. Vydelingum, Scientific Review Administrator, Special Study Section—8, Center for Scientific Review, National Institutes of Health, 6701 Rockledge Drive, MSC 7854, RM 5122, Bethesda, MD 20892; (301) 435–1176, vydelinn@csr.nih.gov.

Name of Committee: Cardiovascular Sciences Integrated Review Group, Cardiovascular and Renal Study Section.

Date: October 23–24, 2000.

Time: 8 a.m. to 5 p.m.

Agenda: To review and evaluate grant applications.

Place: Holiday Inn Bethesda, 8120 Wisconsin Avenue, Bethesda, MD 20814.

Contact Person: Russell T. Dowell, Scientific Review Administrator, Center for Scientific Review, National Institutes of Health, 6701 Rockledge Dr., Rm. 2180, MSC 7818, Bethesda, MD 20892; (301) 435–1169, dowellr@csr.nih.gov.

Name of Committee: Biophysical and Chemical Sciences Integrated Review Group, Physical Biochemistry Study Section.

Date: October 23–24, 2000.
Time: 8:30 a.m. to 4 p.m.
Agenda: To review and evaluate grant applications.
Place: Double Tree Hotel, 1750 Rockville Pike, Rockville, MD 20852.
Contact Person: Gopa Rakhit, Scientific Review Administrator, Center for Scientific Review, National Institutes of Health, 6701 Rockledge Drive, Room 4154, MSC 7806, Bethesda, MD 20892; (301) 435–1721, rakhitg@csr.nih.gov.

Name of Committee: Nutritional and Metabolic Sciences Integrated Review Group, Nutrition Study Section.
Date: October 23–24, 2000.
Time: 8:30 a.m. to 4 p.m.
Agenda: To review and evaluate grant applications.
Place: Holiday Inn—Bethesda, 8120 Wisconsin Avenue, Bethesda, MD 20814.
Contact Person: Sooja K. Kim, Scientific Review Administrator, Center for Scientific Review, National Institutes of Health, 6701 Rockledge Drive, Room 6158, MSC 7892, Bethesda, MD 20892; (301) 435–1780.

Name of Committee: Oncological Sciences Integrated Review Group, Experimental Therapeutics Subcommittee 2.
Date: October 23–25, 2000.
Time: 8:30 a.m. to 5 p.m.
Agenda: To review and evaluate grant applications.
Place: Bethesda Holiday Inn, 8120 Wisconsin Avenue, Bethesda, MD 20814.
Contact Person: Marcia Litwack, Scientific Review Administrator, Center for Scientific Review, National Institutes of Health, 6701 Rockledge Drive, Room 4150, MSC 7804, Bethesda, MD 20892; (301) 435–1719.
Name of Committee: Center for Scientific Review Special Emphasis Panel.
Date: October 23–24, 2000.
Time: 9 a.m. to 5 p.m.
Agenda: To review and evaluate grant applications.
Place: Holiday Inn, 5520 Wisconsin Ave, Chevy Chase, MD 20815.
Contact Person: Julian L. Azorlosa, Scientific Review Administrator, Center for Scientific Review, National Institutes of Health, 6701 Rockledge Drive, Room 3190, MSC 7848, Bethesda, MD 20892, (301) 435–1507.

Name of Committee: Center for Scientific Review Special Emphasis Panel.
Date: October 24, 2000.
Time: 2 p.m. to 3:30 p.m.
Agenda: To review and evaluate grant applications.
Place: NIH, Rockledge 2, Bethesda, MD 20892 (Telephone Conference Call).
Contact Person: Syed Amir, Scientific Review Administrator, Center for Scientific Review, National Institutes of Health, 6701 Rockledge Drive, Room 6168, MSC 7892, Bethesda, MD 20892; (301) 435–1043.

Name of Committee: Center for Scientific Review Special Emphasis Panel.
Date: October 23, 2000.
Time: 1 to 4 p.m.
Agenda: To review and evaluate grant applications.
Place: NIH, Rockledge 2, Bethesda, MD 20892 (Telephone Conference Call).
Contact Person: John Bishop, Scientific Review Administrator, Center for Scientific Review, National Institutes of Health, 6701 Rockledge Drive, Room 5180, MSC 7844, Bethesda, MD 20892, (301) 435–1250.

Name of Committee: Cardiovascular Sciences Integrated Review Group Pathology A Study Section.
Date: October 24–25, 2000.
Time: 8:30 a.m. to 5 p.m.
Agenda: To review and evaluate grant applications.
Place: The Virginia Suites, 1500 Arlington Blvd., Arlington, VA 22209.
Contact Person: Larry Pinkus, Scientific Review Administrator, Center for Scientific Review, National Institutes of Health, 6701 Rockledge Drive, Room 4132, MSC 7802, Bethesda, MD 20892, (301) 435–1214.

Name of Committee: Center for Scientific Review Special Emphasis Panel.
Date: October 24–25, 2000.
Time: 9 a.m. to 5 p.m.
Agenda: To review and evaluate grant applications.
Place: Chevy Chase Holiday Inn, 5520 Wisconsin Ave., Chevy Chase, MD 20815.
Contact Person: Richard Marcus, Scientific Review Administrator, Center for Scientific Review, National Institutes of Health, 6701 Rockledge Drive, Room 5168, MSC 7844, Bethesda, MD 20892, (301) 435–1245, richard.marcus@nih.gov.

Name of Committee: Center for Scientific Review Special Emphasis Panel.
Date: October 24, 2000.
Time: 11 a.m. to 12:30 p.m.
Agenda: To review and evaluate grant applications.
Place: NIH, Rockledge 2, Bethesda, MD 20892 (Telephone Conference Call).
Contact Person: Dennis Leszczynski, Scientific Review Administrator, Center for Scientific Review, National Institutes of Health, 6701 Rockledge Drive, Room 5168, MSC 7892, Bethesda, MD 20892, (301) 435–1044.

Name of Committee: Center for Scientific Review Special Emphasis Panel.
Date: October 24, 2000.
Time: 11 to 11:59 a.m.
Agenda: To review and evaluate grant applications.
Place: Holiday Inn—Bethesda, 8120 Wisconsin Ave., Bethesda, MD 20892.
Contact Person: Sooja K. Kim, Scientific Review Administrator, Center for Scientific Review, National Institutes of Health, 6701 Rockledge Drive, Room 6178, MSC 7892, Bethesda, MD 20892, (301) 435–1780.

Name of Committee: Center for Scientific Review Special Emphasis Panel.
Date: October 24, 2000.
Time: 2 p.m. to 3:30 p.m.
Agenda: To review and evaluate grant applications.
Place: NIH, Rockledge 2, Bethesda, MD 20892 (Telephone Conference Call).
Contact Person: Syed Amir, Scientific Review Administrator, Center for Scientific Review, National Institutes of Health, 6701 Rockledge Drive, Room 6168, MSC 7892, Bethesda, MD 20892; (301) 435–1043.

(Catalogue of Federal Domestic Assistance Program Nos. 93.306, Comparative Medicine, 93.306; 93.333, Clinical Research, 93.333, 93.337, 93.393–93.396, 93.837–93.844, 93.846–93.878, 93.892, 93.893, National Institutes of Health, HHS)

Dated: October 4, 2000.

LaVerne Y. Stringfield,

Director, Office of Federal Advisory Committee Policy.

[FR Doc. 00–26568 Filed 10–16–00; 8:45 am]

BILLING CODE 4140–01–M

DEPARTMENT OF HEALTH AND HUMAN SERVICES

National Institutes of Health

Center for Scientific Review; Notice of Closed Meetings

Pursuant to section 10(d) of the Federal Advisory Committee Act, as amended (5 U.S.C. Appendix 2), notice is hereby given of the following meetings.

The meetings will be closed to the public in accordance with the provisions set forth in sections 552b(c)(4) and 552b(c)(6), title 5 U.S.C., as amended. The grant applications and the discussions could disclose confidential trade secrets or commercial property such as patentable material, and personal information concerning individuals associated with the grant applications, the disclosure of which would constitute a clearly unwarranted invasion of personal privacy.

Name of Committee: Center for Scientific Review Special Emphasis Panel.
Date: October 11, 2000.
Time: 4 pm to 6 pm.
Agenda: To review and evaluate grant applications.
Place: Chase Park Plaza, 212–232 N. Kingshighway Blvd., St. Louis, MO 63108.
Contact Person: Zakir Bengali, PhD, Scientific Review Administrator, Center for Scientific Review, National Institutes of Health, 6701 Rockledge Drive, Room 5150, MSC 7842, Bethesda, MD 20892, (301) 435–1742.

This notice is being published less than 15 days prior to the meeting due to the timing limitations imposed by the review and funding cycle.

Name of Committee: Center for Scientific Review Special Emphasis Panel.
Date: October 12, 2000.
Time: 10:30 am to 12 pm.
Agenda: To review and evaluate grant applications.
Place: Chase Park Plaza, 212–232 N. Kingshighway Blvd., St. Louis, MO 63108.
Contact Person: Zakir Bengali, PhD, Scientific Review Administrator, Center for Scientific Review, National Institutes of Health, 6701 Rockledge Drive, Room 5150, MSC 7842, Bethesda, MD 20892, (301) 435–1742.

This notice is being published less than 15 days prior to the meeting due to the timing limitations imposed by the review and funding cycle.

Name of Committee: Center for Scientific Review Special Emphasis Panel.
Date: October 16–17, 2000.
Time: 8 am to 5 pm.
Agenda: To review and evaluate grant applications.
Place: Embassy Suites, Chevy Chase Pavillion, 4300 Military Rd., Wisconsin at Western Ave., Washington, DC 20015.
Contact Person: Michael A. Lang, PhD, Scientific Review Administrator, Center for Scientific Review, National Institutes of Health, 6701 Rockledge Drive, Room 5210, MSC 7850, Bethesda, MD 20892, (301) 435–1265.

This notice is being published less than 15 days prior to the meeting due to the timing limitations imposed by the review and funding cycle.

Name of Committee: Pathophysiological Sciences Integrated Review Group, Lung Biology and Pathology Study Section.
Date: October 25–26, 2000.
Time: 8:30 am to 5 pm.
Agenda: To review and evaluate grant applications.
Place: St. James Hotel, 950 24th Street, NW., Washington, DC 20037.
Contact Person: George M. Barnas, PhD, Scientific Review Administrator, Center for Scientific Review, National Institutes of Health, 6701 Rockledge Drive, Room 2180, MSC 7818, Bethesda, MD 20892, (301) 435–0696, george_barnas@nih.gov.

This notice is being published less than 15 days prior to the meeting due to the timing limitations imposed by the review and funding cycle.

Name of Committee: Social Sciences, Nursing, Epidemiology and Methods Integrated Review Group Nursing Research Study Section.
Date: October 25–27, 2000.
Time: 8 am to 3 pm.
Agenda: To review and evaluate grant applications.
Place: Holiday Inn, Tysons Corner, 1960 Chain Bridge Road, McLean, VA 22102.
Contact Person: Gertrude McFarland, DNSC, FAAN, Scientific Review Administrator, Center for Scientific Review, National Institutes of Health, 6701 Rockledge Drive, Room 4110, MSC 7816, Bethesda, MD 20892, (301) 435–1784.

This notice is being published less than 15 days prior to the meeting due to the timing limitations imposed by the review and funding cycle.

Name of Committee: Infectious Diseases and Microbiology Integrated Review Group, Microbial Physiology and Genetics Subcommittee 1.
Date: October 25–26, 2000.
Time: 8:30 am to 6 pm.
Agenda: To review and evaluate grant applications.
Place: One Washington Circle Hotel, Conference Center, One Washington Circle, Washington, DC 20037.
Contact Person: Martin L. Slater, PhD, Scientific Review Administrator, Center for Scientific Review, National Institutes of Health, 6701 Rockledge Drive, Room 4184, MSC 7808, Bethesda, MD 20892, (301) 435–1149.

This notice is being published less than 15 days prior to the meeting due to the timing limitations imposed by the review and funding cycle.

Name of Committee: Center for Scientific Review Special Emphasis Panel.
Date: October 25, 2000.
Time: 8:30 am to 5 pm.
Agenda: To review and evaluate grant applications.
Place: Holiday Inn—Bethesda, 8120 Wisconsin Avenue, Bethesda, MD 20814.
Contact Person: Ann A. Jerkins, PhD, Scientific Review Administrator, Center for Scientific Review, National Institutes of Health, 6701 Rockledge Drive, Room 6154, MSC 7892, Bethesda, MD 20892, (301) 435–4414.

This notice is being published less than 15 days prior to the meeting due to the timing limitations imposed by the review and funding cycle.

Name of Committee: Center for Scientific Review Special Emphasis Panel.
Date: October 25–26, 2000.
Time: 8:30 am to 5 pm.
Agenda: To review and evaluate grant applications.
Place: Jurys Washington Hotel, Washington, DC 20036.
Contact Person: Syed Husain, PhD, Scientific Review Administrator, Center for Scientific Review, National Institutes of Health, 6701 Rockledge Drive, Room 5216, MSC 7850, Bethesda, MD 20892–7850, (301) 435–1224, husains@csr.nih.gov

This notice is being published less than 15 days prior to the meeting due to the timing limitations imposed by the review and funding cycle.

Name of Committee: Center for Scientific Review Special Emphasis Panel.
Date: October 25, 2000.
Time: 10 am to 1 pm.
Agenda: To review and evaluate grant applications.
Place: NIH, Rockledge 2, Bethesda, MD 20892 (Telephone Conference Call).
Contact Person: John Bishop, PhD, Scientific Review Administrator, Center for Scientific Review, National Institutes of Health, 6701 Rockledge Drive, Room 5180, MSC 7844, Bethesda, MD 20892, (301) 435–1250.

This notice is being published less than 15 days prior to the meeting due to the timing limitations imposed by the review and funding cycle.

Name of Committee: Center for Scientific Review Special Emphasis Panel.
Date: October 25, 2000.
Time: 1:30 pm to 3 pm.
Agenda: To review and evaluate grant applications.
Place: NIH, Rockledge 2, Bethesda, MD 20892 (Telephone Conference Call).
Contact Person: Sally Ann Amero, PhD, Scientific Review Administrator, Center for Scientific Review, Genetic Sciences Integrated Review Group, National Institutes of Health, 6701 Rockledge Drive, Room 2206, MSC 7890, Bethesda, MD 20892–7890, (301) 435–1159, ameros@csr.nih.gov

This notice is being published less than 15 days prior to the meeting due to the timing limitations imposed by the review and funding cycle.

Name of Committee: Center for Scientific Review Special Emphasis Panel.
Date: October 25, 2000.
Time: 2 pm to 4 pm.
Agenda: To review and evaluate grant applications.
Place: NIH, Rockledge 2, Bethesda, MD 20892 (Telephone Conference Call).
Contact Person: Gamil C. Debbas PhD, Scientific Review Administrator, Center for Scientific Review, National Institutes of Health, 6701 Rockledge Drive, Room 5170, MSC 7844, Bethesda, MD 20892, (301) 435–1018.

This notice is being published less than 15 days prior to the meeting due to the timing limitations imposed by the review and funding cycle.

Name of Committee: Center for Scientific Review Special Emphasis Panel.
Date: October 25, 2000.
Time: 12 pm to 1 pm.
Agenda: To review and evaluate grant applications.
Place: NIH, Rockledge 2, Bethesda, MD 20892 (Telephone Conference Call).
Contact Person: Chhanda L. Ganguly, PhD, Scientific Review Administrator, Center for Scientific Review, National Institutes of Health, 6701 Rockledge Drive, Room 5156, MSC 7842, Bethesda, MD 20892, (301) 435–1739.

This notice is being published less than 15 days prior to the meeting due to the timing limitations imposed by the review and funding cycle.

Name of Committee: Integrative, Functional and Cognitive Neuroscience Integrated Review Group Alcohol and Toxicology Subcommittee 3.
Date: October 26–27, 2000.
Time: 8 am to 5 pm.
Agenda: To review and evaluate grant applications.
Place: The Washington Monarch Hotel, 2401 M Street NW, Washington, DC 20037.
Contact Person: Christine Melchior, PhD, Scientific Review Administrator, Center for Scientific Review, National Institutes of Health, 6701 Rockledge Drive, Room 4102, MSC 7816, Bethesda, MD 20892, (301) 435–1713.

Name of Committee: Endocrinology and Reproductive Sciences Integrated Review Group, Human Embryology and Development Subcommittee 1.
Date: October 26–27, 2000.
Time: 8 am to 11 am.
Agenda: To review and evaluate grant applications.
Place: Embassy Suites, Chevy Chase Pavilion, 4300 Military Rd., Wisconsin at Western Ave., Washington, DC 20015.
Contact Person: Michael Knecht, PhD, Scientific Review Administrator, Center for Scientific Review, National Institutes of Health, 6701 Rockledge Drive, Room 6176, MSC 7892, Bethesda, MD 20892, (301) 435–1046.

Name of Committee: National and Metabolic Sciences Integrated Review Group, Metabolism Study Section.
Date: October 26–27, 2000.
Time: 8 am to 6 pm.
Agenda: To review and evaluate grant applications.
Place: Holiday Inn, Bethesda, MD 20814.
Contact Person: Krish Krishnan, PhD, Scientific Review Administrator, Center for Scientific Review, National Institutes of Health, 6701 Rockledge Drive, Room 6164, MSC 7892, Bethesda, MD 20892, (301) 435–1041.

Name of Committee: Center for Scientific Review Special Emphasis Panel.
Date: October 26–27, 2000.
Time: 8 am to 5 pm.
Agenda: To review and evaluate grant applications.
Place: Grand Westin Hotel, 2350 M Street, Washington, DC 20037–1417.
Contact Person: Marjam G. Behar, PhD, Scientific Review Administrator, Center for Scientific Review, National Institutes of Health, 6701 Rockledge Drive, Room 4178, MSC 7806, Bethesda, MD 20892, (301) 435–1180.

Name of Committee: Biophysical and Chemical Sciences Integrated Review Group, Molecular and Cellular Biophysics Study Section.
Date: October 26–27, 2000.
Time: 8 am to 6 pm.
Agenda: To review and evaluate grant applications.
Place: Hotel Sofitel, 1914 Connecticut Ave., NW, Washington, DC 20009.
Contact Person: Nancy Lamontagne, PhD., Scientific Review Administrator, Center for Scientific Review, National Institutes of Health, 6701 Rockledge Drive, Room 4170, MSC 7806, Bethesda, MD 20892, (301) 435–1726.

Name of Committee: Center for Scientific Review Special Emphasis Panel.
Date: October 26, 2000.
Time: 8 am to 11 am.
Agenda: To review and evaluate grant applications.
Place: St. James Hotel, 950 24th Street, NW, Washington, DC 20037.
Contact Person: Everett E. Sinnett, PhD, Scientific Review Administrator, Center for Scientific Review, National Institutes of Health, 6701 Rockledge Drive, Room 2178, MSC 7818, Bethesda, MD 20892, (301) 435–1016, sinnett@nih.gov

Name of Committee: Genetic Sciences Integrated Review Group, Mammalian Genetics Study Section.
Date: October 26–27, 2000.
Time: 8 am to 5 pm.
Agenda: To review and evaluate grant applications.
Place: The Governor's House Hotel, 1615 Rhode Island Avenue, NW., Washington, DC 20036.
Contact Person: Camilla Day, PhD, Scientific Review Administrator, Center for Scientific Review, National Institutes of Health, 6701 Rockledge Drive, Room 2208, MSC 7890, Bethesda, MD 20892, (301) 435–1037, dayc@drg.nih.gov

Name of Committee: Biochemical Sciences Integrated Review Group, Physiological Chemistry Study Section.
Date: October 26–27, 2000.
Time: 8 am to 1 pm.
Agenda: To review and evaluate grant applications.
Place: Washington Plaza Hotel, 10 Thomas Circle, NW., Washington, DC 20005.
Contact Person: Richard Panniers, PhD, Scientific Review Administrator, Center for Scientific Review, National Institutes of Health, 6701 Rockledge Drive, Room 5148, MSC 7842, Bethesda, MD 20892, (301) 435–1741.

Name of Committee: Immunological Sciences Integrated Review Group, Immunological Sciences Study Section.
Date: October 26–27, 2000.
Time: 8 am to 3 pm.
Agenda: To review and evaluate grant applications.
Place: Holiday Inn, 2 Montgomery Village Avenue, Gaithersburg, MD 20879.
Contact Person: Alexander D. Politis, PhD, Scientific Review Administrator, Center for Scientific Review, National Institutes of Health, 6701 Rockledge Drive, Room 4204, MSC 7812, Bethesda, MD 20892, (301) 435–1225.

Name of Committee: Center for Scientific Review Special Emphasis Panel.
Date: October 26–27, 2000.
Time: 8:30 am to 4 pm.
Agenda: To review and evaluate grant applications.
Place: Chevy Chase Holiday Inn, 5520 Wisconsin Ave., Chevy Chase, MD 20815.
Contact Person: Michael Micklin, PhD, Scientific Review Administrator, Center for Scientific Review, National Institutes of Health, 6701 Rockledge Drive, Room 3178, MSC 7848 Bethesda, MD 20892, (301) 435–1258, micklinm@csr.nih.gov.

Name of Committee: Center for Scientific Review Special Emphasis Panel.
Date: October 26, 2000.
Time: 8:30 am to 5 pm.
Agenda: To review and evaluate grant applications.
Place: Ramada Inn Rockville, 1775 Rockville Pike, Rockville, MD 20852.
Contact Person: Prabha L. Atreya, PhD, Scientific Review Administrator, Center for Scientific Review, National Institutes of Health, 6701 Rockledge Drive, Room 5152, MSC 7842, Bethesda, MD 20892, (301) 435–8367.

Name of Committee: Social Sciences, Nursing, Epidemiology and Methods Integrated Review Group, Epidemiology and Disease Control Subcommittee 2.
Date: October 26–27, 2000.
Time: 8:30 am to 5 pm.
Agenda: To review and evaluate grant applications.
Place: George Washington University Inn, 824 New Hampshire Ave, NW., Washington, DC 20037.
Contact Person: David M. Monsees, PhD, Scientific Review Administrator, Center for Scientific Review, National Institutes of Health, 6701 Rockledge Drive, Room 3150, MSC 7848, Bethesda, MD 20892, (301) 435–0684, monseesd@drg.nih.gov.

Name of Committee: Center for Scientific Review Special Emphasis Panel.
Date: October 26–27, 2000.
Time: 8:30 am to 4 pm.
Agenda: To review and evaluate grant applications.
Place: Chevy Chase Holiday Inn, 5520 Wisconsin Ave., Chevy Chase, MD 20815.
Contact Person: Gloria B. Levin, PhD, Scientific Review Administrator, Center for Scientific Review, National Institutes of Health, 6701 Rockledge Drive, Room 3166, MSC 7848, Bethesda, MD 20892, (301) 435–1017, leving@csr.nih.gov.

Name of Committee: Center for Scientific Review Special Emphasis Panel.
Date: October 26–27, 2000.
Time: 9 am to 5 pm.
Agenda: To review and evaluate grant applications.
Place: Holiday Inn, 5520 Wisconsin Avenue, Chevy Chase, MD 20815.
Contact Person: Cheri Wiggs, PhD, Scientific Review Administrator, Center for Scientific Review, National Institutes of Health, 6701 Rockledge Drive, Room 3180, MSC 7848, Bethesda, MD 20892, (301) 435–1261.

Name of Committee: Biophysical and Chemical Sciences Integrated Review Group, Bio-Organic and Natural Products Chemistry Study Section.
Date: October 26–27, 2000.
Time: 9 am to 5 pm.
Agenda: To review and evaluate grant applications.
Place: Holiday Inn, 5520 Wisconsin Avenue, Chevy Chase, MD 20815.
Contact Person: Mike Radtke, PhD, Scientific Review Administrator, Center for Scientific Review, National Institutes of Health, 6701 Rockledge Drive, Room 4176, MSC 7806, Bethesda, MD 20892, 301–435–1728, radtkem@csr.hih.gov.

Name of Committee: Center for Scientific Review Special Emphasis Panel.
Date: October 26, 2000.
Time: 11 am to 1 pm.
Agenda: To review and evaluate grant applications.
Place: NIH, Rockledge 2, Bethesda, MD 20892, (Telephone Conference Call).
Contact Person: John Bishop, PhD, Scientific Review Administrator, Center for Scientific Review, National Institutes of Health, 6701 Rockledge Drive, Room 5180, MSC 7844, Bethesda, MD 20892, (301) 435–1250.

(Catalogue of Federal Domestic Assistance Program Nos. 93.306, Comparative Medicine, 93.306; 93.333, Clinical Research, 93.333, 93.337, 93.393–93.396, 93.837–93.844, 93.846–93.878, 93.892, 93.893, National Institutes of Health, HHS)

Dated: October 6, 2000.

LaVerne Y. Stringfield,

director, Office of Federal Advisory Committee Policy.

[FR Doc. 00–26575 Filed 10–16–00; 8:45 am]

BILLING CODE 4140–01–M

DEPARTMENT OF HEALTH AND HUMAN SERVICES

National Institutes of Health

Center for Scientific Review; Amended Notice of Meeting

Notice is hereby given of a change in the meeting of the Center for Scientific Review Special Emphasis Panel, September 26, 2000, 12:30 p.m. to September 26, 2000 2:30 p.m., NIH, Rockledge 2, Bethesda, MD 20892 which was published in the **Federal Register** on September 21, 2000, 65 FR 57201–57202.

The meeting will be held October 24, 2000, from 11 a.m. to 12:30 p.m. The location remains the same. The meeting is closed to the public.

Dated: October 6, 2000.

LaVerne Y. Stringfield,

Director, Office of Federal Advisory Committee Policy.

[FR Doc. 00–26577 Filed 10–16–00; 8:45 am]

BILLING CODE 4140–01–M

DEPARTMENT OF HEALTH AND HUMAN SERVICES

National Institutes of Health

Center for Scientific Review; Amended Notice of Meeting

Notice is hereby given of a change in the meeting of the Diagnostic Radiology Study Section, October 16, 2000, 8 am to October 17, 2000, 5 pm, Georgetown Holiday Inn, 2101 Wisconsin Avenue, NW, Washington, DC 20007 which was published in the **Federal Register** on October 5, 2000, 65 FR 59454–59456.

The meeting will be held at the Georgetown Suites, 1111 30th Street, NW, Washington, DC. The dates and time remain the same. The meeting is closed to the public.

Dated: October 6, 2000.

LaVerne Y. Stringfield,

Director, Office of Federal Advisory Committee Policy.

[FR Doc. 00–26578 Filed 10–16–00; 8:45 am]

BILLING CODE 4140–01–M

DEPARTMENT OF HEALTH AND HUMAN SERVICES

Prospective Grant of Exclusive License: Insulin Producing Cells Differentiated from Non-Insulin Producing Cells by GLP–1 and Exendin–4 and Use Thereof

AGENCY: National Institutes of Health, Public Health Service, DHHS.

ACTION: Notice.

SUMMARY: This is notice, in accordance with 35 U.S.C. 209(c)(1) and 37 CFR 404.7(a)(1)(i), that the National Institutes of Health (NIH), Department of Health and Human Services, is contemplating the grant of an exclusive license worldwide to practice the invention embodied in: PCT Patent Application Serial Number PCT/US99/180899 (PHS Ref. E–151–97/1) entitled ''Insulin Producing Cells Differentiated from Non-Insulin Producing Cells by GLP–1 and Exendin–4 and Use Thereof'' filed on August 18, 1999, claiming priority of August 10, 1998, to Amylin Pharmaceuticals, Inc., having a place of business in San Diego, CA. The patent rights in this invention have been assigned to the United States America.

DATES: Only written comments and/or application for a license which are received by the NIH Office of Technology Transfer on or before December 18, 2000 will be considered.

ADDRESSES: Requests for a copy of the patent applications, inquiries, comments and other materials relating to the contemplated license should be directed to: John Rambosek, Ph.D., Office of Technology Transfer, National Institutes of Health, 6011 Executive Boulevard, Suite 325, Rockville, MD 20852–3804; Email: jr312d@nih.gov; Telephone: (301) 496–7056, ext. 270; Facsimile: (301) 402–0220.

SUPPLEMENTARY INFORMATION: The patent application relates to a population of insulin producing cells differentiated from non-insulin producing cells by contacting the non-insulin producing cells with Glucagon-like peptide–1 (GLP–1), Exendin–4, or related peptides. The application also relates to the methods for obtaining the insulin producing cells and therapeutic uses in the treatment of diabetes mellitus.

The prospective exclusive license will be royalty bearing and will comply with the terms and conditions of 35 U.S.C. 209 and 37 CFR 404.7. The prospective exclusive license may be limited to the field of use for development of products and methods for treatment of diabetes. The field for use would include development, use, manufacture, distribution, import, export, marketing and sale of the licensed invention, throughout the world. The prospective exclusive license may be granted unless, within 60 days from the date of this published Notice, NIH receives written evidence and argument that establishes that the grant of the license would not be consistent with the requirements of 35 U.S.C. 209 and 37 CFR 404.7.

Properly filed competing applications for a license filed in response to this notice will be treated as objections to the contemplated license. Comments and objections submitted in response to this notice will not be made available for public inspection, and, to the extent permitted by law, will not be released under the Freedom of Information Act, 5 U.S.C. 552.

Dated: October 5, 2000.

Jack Spiegel,

Director, Division of Technology Development and Transfer, Office of Technology Transfer.

[FR Doc. 00–26582 Filed 10–16–00; 8:45 am]

BILLING CODE 4140–01–M

DEPARTMENT OF HEALTH AND HUMAN SERVICES

Public Health Service

National Toxicology Program; National Toxicology Program (NTP) Board of Scientific Counselors' Meeting; Review of Nominations for Listing in the 10th Report on Carcinogens

Pursuant to Public Law 92–463, notice is hereby given of the next meeting of the NTP Board of Scientific Counselors' Report on Carcinogens (RoC) Subcommittee to be held on December 13, 14, and 15, 2000, at the Wyndham City Center, 1143 New Hampshire Ave., Washington, DC 20037. On December 13, registration will begin at 9 a.m. and the meeting will begin at 9:30 a.m. On December 14 and 15, the meeting will begin at 8:30 a.m. Pre-registration is not required; however, persons requesting time to make oral, public comments are asked to notify Dr. Mary S. Wolfe, Executive Secretary, prior to the meeting (contact information given below). The agenda covers the peer review of agents, substances, mixtures, or exposure circumstances nominated for listing in the 10th Report on Carcinogens, and includes an opportunity for public input.

Background

The Department of Health and Human Services (DHHS) Report on Carcinogens

(RoC) is a public information document prepared for the U.S. Congress by the National Toxicology Program (NTP) in response to Section 301(b)(4) of the Public Health Service Act, as amended. The intent of the document is to provide a listing of those agents, substances, mixtures or exposure circumstances that are either ''known'' or ''reasonably anticipated'' to cause cancer in humans and to which a significant number of people in the United States are exposed. The process for preparation of the RoC has three levels of scientific peer review. Central to the evaluations of the review groups is the use of criteria for inclusion in or removal of listings from the Report. The current criteria for listing in or delisting from the Report were approved by the Secretary, DHHS, in September 1996. The major change in the RoC, which occurred as a result of the criteria revision, was to include consideration of all relevant information, including mechanistic data, in the decision to list in or delist from future editions. The review process for listing in or delisting from the RoC begins with initial scientific review by the National Institute of Environmental Health Sciences (NIEHS)/NTP Report on Carcinogens Review Committee (RG1), which is comprised of NIEHS/NTP staff scientists. The second scientific review group (RG2) is comprised of representatives from the Federal health research and regulatory agencies that are members of the NTP Executive Committee. The third is external public peer review by the NTP Board of Scientific Counselors (BSC) RoC Subcommittee. Following completions of these reviews and solicitation of public comments through announcements in the **Federal Register** and other media, the independent recommendations of the three scientific peer review groups and all public comments are presented to the NTP Executive Committee for review and comment. All recommendations and public comments are submitted to the Director, NTP, who reviews them and makes a final recommendation to the Secretary, DHHS, concerning the listing or delisting of chemicals or exposure circumstances in the RoC. The Secretary has final review and approval for the Tenth Report.

Agenda

The meeting of the NTP RoC Subcommittee is scheduled for December 13, 14 and 15, 2000. Tentatively scheduled to be peer reviewed are eight nominated chemicals or exposure circumstances. These nominations are listed alphabetically in the attached table, along with supporting information and a tentative order of presentation and review. Background summary documents for each of the nominations are available to the public and include a summary of the scientific data and information used to evaluate the nomination. A copy of the draft background summary document for each of these nominations is available electronically on the NTP web homepage at http://ntp-server.niehs.nih.gov/ and the Environmental Health Information Service website at http://ehis.niehs.nih.gov/ or can be obtained in hard copy, as available, from: Dr. C.W. Jameson, Report on Carcinogens, NIEHS, MD EC–14, 79 Alexander Drive, Building 4401, Room 3118, P.O. Box 12233, Research Triangle Park, NC 27709 (919/541–4096; FAX 919/541–2242; email *jameson@niehs.nih.gov*).

The April 5, 2000 **Federal Register** Announcement (Volume 65, Number 66, Page 17889–17891) calling for public comments on the nominations to be reviewed in 2000 for listing in the 10th RoC, indicated that Human Papillomaviruses and Lead and Lead Compounds would be among the nominations to be reviewed. The initial review of these two nominations by NTP staff found an extensive published database for each nomination and there was insufficient time to prepare adequately a comprehensive summary background document on each for review in 2000. Therefore, the nominations of Human Papillomaviruses and Lead and Lead Compounds are deferred for review until 2001.

Solar Radiation and Exposure to Sunlamps and Sunbeds was nominated by a private individual for review and delisting from the RoC. In addition the Suntanning Association for Education also nominated Exposure to Sunlamps and Sunbeds for review and delisting from the RoC. As outlined in the published listing/delisting procedures for the RoC, the RG1 reviewed these nominations and the data provided by the nominators. Based on its review of the available information concerning the carcinogenicity of Solar Radiation and Exposure to Sunlamps and Sunbeds, the RG1 determined that no new information was provided by the nominators that was not already considered during the listing procedure and recommended that, due to the lack of any significant new data to support this delisting, the nomination to delist should not proceed any further through the review process. Therefore, the delisting of Solar Radiation and Exposure to Sunlamps and Sunbeds is not on the agenda for review at the December 13th–15th RoC Subcommittee meeting. The nominators have been notified of this action and invited to resubmit the nomination to delist Solar Radiation and Exposure to Sunlamps and Sunbeds from the RoC providing additional justification and relevant new data to support the nomination.

Solicitation of Public Comment

The NTP Board of Scientific Counselors RoC Subcommittee meeting is open to the public, and time will be provided for public comment on each of the nominations under review. In order to facilitate planning for the meeting, persons requesting time for an oral presentation regarding a particular nomination should notify the Executive Secretary, Dr. Mary S. Wolfe, P.O. Box 12233, A3–07, Research Triangle Park, NC 27709 (telephone 919/541–3971; FAX 919/541–0295; email wolfe@niehs.nih.gov) no later than December 1, 2000. Persons registering to make comments are asked to provide, if possible, a written copy of their statement by December 1st so copies can be made and distributed to Subcommittee members for their timely review prior to the meeting. Written statements can supplement and expand the oral presentation, and each speaker is asked to provide his/her name, affiliation, mailing address, phone, fax, e-mail and supporting organization (if any). At least seven minutes will be allotted to each speaker, and if time permits, can be extended to 10 minutes. Individuals who register to make oral presentations by December 1st will be notified about the time available for their presentation at least one week prior to the meeting. Registration for making public comments will also be available on-site. Time allowed for presentation by on-site registrants may be less then that for preregistered speakers and will be determined by the number who register at the meeting. If registering on-site to speak and reading oral comments from printed copy, the speaker is asked to bring 25 copies of the text. These copies will be distributed to the Chair and Subcommittee members and supplement the record.

Written comments, in lieu of making oral comments, are welcome. All comments must include name, affiliation, mailing address, phone, fax, e-mail and sponsoring organization (if any) and should be received by December 1st for distribution to the Subcommittee. Written comments received after December 1st will not be considered by Subcommittee members in their reviews.

Solicitation of Additional Information

The NTP would welcome receiving information from completed human or experimental animal cancer studies or studies of mechanism of cancer formation, as well as current production data, human exposure information, and use patterns for any of the nominations listed in this announcement. Organizations or individuals that wish to provide information should contact Dr. C.W. Jameson at the address given above.

The agenda and a roster of Subcommittee members will be available prior to the meeting on the NTP web homepage at *http://ntp__server.niehs.nih.gov/* and upon request from Dr. Wolfe. Summary minutes from the previous meeting are available on the NTP web homepage and upon request from Dr. Wolfe.

Dated: October 6, 2000.

Kenneth Olden,

Director, National Toxicology Program.

SUMMARY DATA FOR NOMINATIONS TENTATIVELY SCHEDULED FOR REVIEW AT THE MEETING OF THE NTP BOARD OF SCIENTIFIC COUNSELORS' REPORT ON CARCINOGENS SUBCOMMITTEE DECEMBER 13, 14, & 15, 2000

Nomination to be reviewed/ CAS number	Primary uses or exposures	To be reviewed for	Tentative review order
Broad Spectrum UV Radiation and UVA, UVB and UVC.	Solar and artificial sources of ultraviolet radiation.	Listing in the 10th Report	1
Chloramphenicol/(56–75–7)	Used widely as an antibiotic since the 1950s	Listing in the 10th Report	6
Estrogens, Steroidal	Estrogens are widely used in post-menopausal therapy and in oral contraceptives for women.	Listing in the 10th Report	5
Metallic Nickel & Nickel Alloys	Widely used in commercial applications for over 100 years.	Listing in the 10th Report	4
Methyleugenol/(93–15–2)	Flavoring agent used in jellies, baked goods, nonalcoholic beverages, chewing gum, candy, and ice cream. Also used as a fragrance for many perfumes, lotions, detergents and soaps.	Listing in the 10th Report	3
Talc/(14807–96–6) (Asbestiform and (Non-Asbestiform).	Asbestiform talc (i.e. talc containing asbestiform (fibers) occurs in various geological settings around the world. Occupational exposure occurs during mining, milling and processing. Non-asbestiform talc (i.e. talc not containing asbestiform fibers) occurs in various geological settings around the world. Occupational exposure occurs during mining, milling and processing. Exposure to general population occurs through use of products such as cosmetics.	Listing in the 10th Report	7
Trichloroethylene (TCE)/(79–01–6).	Trichloroethylene is widely used as a solvent with 80–90% used worldwide for degreasing metals.	Upgrade to Known	2
Wood Dust	It is estimated that at least two million people are routinely exposed occupationally to wood dust worldwide. Non-occupational exposure also occurs. The highest exposures have generally been reported in wood furniture and cabinet manufacture, especially during machine sanding and similar operations.	Listing in the 10th Report	8

[FR Doc. 00–26586 Filed 10–16–00; 8:45 am]

BILLING CODE 4140–01–P

DEPARTMENT OF HOUSING AND URBAN DEVELOPMENT

[Docket No. FR 4563–N–17]

Office of the Assistant Secretary for Public and Indian Housing; Notice of Proposed Information Collection for Public Comment; Certificate of Completion—Consolidated

AGENCY: Office of the Assistant Secretary for Public and Indian Housing, HUD.

ACTION: Notice.

SUMMARY: The proposed information collection requirement described below will be submitted to the Office of Management and Budget (OMB) for review, as required by the Paperwork Reduction Act. The Department is soliciting public comments on the subject proposal.

DATES: Comments due: December 18, 2000.

ADDRESSES: Interested persons are invited to submit comments regarding this proposal. Comments should refer to the proposal by name and/or OMB Control number and should be sent to: Mildred M. Hamman, Reports Liaison Officer, Public and Indian Housing, Department of Housing and Urban Development, 451 7th Street, SW., Room 4238, Washington, DC 20410–5000.

FOR FURTHER INFORMATION CONTACT: Mildred M. Hamman, (202) 708–3642, extension 4128, for copies of the proposed forms and other available documents. (This is not a toll-free number).

SUPPLEMENTARY INFORMATION: The Department will submit the proposed information collection to OMB for review, as required by the Paperwork Reduction Act of 1995 (44 U.S.C. Chapter 35, as amended).

This Notice is soliciting comments from members of the public and affected

agencies concerning the proposed collection of information to: (1) Evaluate whether the proposed collection of information is necessary for the proper performance of the functions of the agency, including whether the information will have practical utility; (2) evaluate the accuracy of the agency's estimate of the burden of the proposed collection of information; (3) enhance the quality, utility, and clarity of the information to be collected; and (4) minimize the burden of the collection of information on those who are to respond, including through the use of appropriate automated collection techniques or other forms of information technology; *e.g.*, permitting electronic submission of responses.

This Notice also lists the following information:

Title of Proposal: Certificate of Completion—Consolidated.

OMB Control Number: None.

Description of the need for the information and proposed use: HUD needs the information on the Certificate of Completion-Consolidated because it transmits information from the Public Housing Agencies (PHAs) to HUD concerning the completion of construction contracts; this information is needed so that HUD may authorize payment of funds due the contractor or developer. The information is supplied by the project architect, assembled and forwarded by the PHA.

Agency form number: None.

Members of affected public: State or local government.

Estimation of the total number of hours needed to prepare the information collection including number of respondents, frequency of response, and hours of response: On a once per project basis, 147 respondents, one response per project, 147 total responses, one hour per response, 147 total burden hours.

Status of the proposed information collection: Extension, without change.

Authority: Section 3506 of the Paperwork Reduction Act of 1995, 44 U.S.C. Chapter 35, as amended.

Dated: October 10, 2000.

Harold Lucas,

Assistant Secretary for Public and Indian Housing.

[FR Doc. 00–26546 Filed 10–16–00; 8:45 am]

BILLING CODE 4210–33–M

DEPARTMENT OF THE INTERIOR

Fish and Wildlife Service

Notice To Extend the Public Comment Period for the Technical/Agency Draft Revised Recovery Plan for the Red-Cockaded Woodpecker (Picoides borealis)

AGENCY: Fish and Wildlife Service, Interior.

ACTION: Notice of extension of public comment period.

SUMMARY: The Fish and Wildlife Service gives notice that the comment period announced in the September 13, 2000, notice of availability of the Technical/Agency Draft Revised Recovery Plan for the red-cockaded woodpecker, will be extended an additional 30 days until December 13, 2000. The Service is providing this extension because of the extensive nature of the draft recovery plan revision and requests by one federal agency and one private organization for an extension. The red-cockaded woodpecker is a bird species endemic to the southeastern United States. The Service extends the current 60-day comment period and solicits review and comment from the public on this draft recovery plan revision.

DATES: Comments on the draft recovery plan revision received by December 13, 2000 will be considered by the Service.

ADDRESSES: You may obtain a copy of the draft recovery plan by contacting Ralph Costa, Clemson Field Office, U.S. Fish and Wildlife Service, Clemson University, Clemson, South Carolina 29634 (telephone 864/656–2432). Send written comments and materials regarding the plan to the Field Supervisor at the above address. Comments and materials received are available upon request for public inspection, by appointment, during normal business hours at the above address.

FOR FURTHER INFORMATION CONTACT: Mr. Ralph Costa at the above address and telephone number.

SUPPLEMENTARY INFORMATION:

Background

Restoring endangered or threatened animals or plants to the point where they are again secure, self-sustaining members of their ecosystems is a primary goal of our endangered species program. To help guide the recovery effort, we are working to prepare recovery plans for most of the listed species native to the United States. Recovery plans describe actions considered necessary for conservation of the species, establish criteria for downlisting or delisting them, and estimate time and cost for implementing the recovery measures needed.

The Endangered Species Act of 1973, as amended (16 U.S.C. 1531 *et seq.*) (Act), requires the development of recovery plans for listed species unless such a plan would not promote the conservation of a particular species. Section 4(f) of the Act, as amended in 1988, requires that a public notice and an opportunity for public review and comment be provided during recovery plan development. We will consider all information presented during a public comment period prior to approval of each new or revised recovery plan. We and other Federal agencies will also take these comments into account in the course of implementing approved recovery plans.

Red-cockaded woodpeckers are endemic to mature pine woodlands of the southeastern United States. Because of habitat loss and alteration, the species suffered severe declines throughout the first three quarters of the twentieth century. We officially listed the red-cockaded woodpecker as an endangered species in 1970 (35 FR 16047). Intensive research has greatly increased our understanding of the ecology of red-cockaded woodpeckers and has provided powerful management tools that have been highly successful in reversing the widespread declines of past decades. With appropriate management, the species can achieve full recovery. This draft revised recovery plan describes in detail the ecology and management of red-cockaded woodpeckers, and outlines a mechanism to recover the species based on new insight into population and species viability. We will use comments and information provided during this review in preparing the final recovery plan.

Public Comments Solicited

We solicit written comments on the recovery plan described. We will consider all comments received by the date specified above prior to approval of the plan.

Authority: The authority for this action is section 4(f) of the Endangered Species Act, 16 U.S.C. 1533 (f).

Dated: October 10, 2000.

Ralph Costa,

Field Supervisor.

[FR Doc. 00–26589 Filed 10–16–00; 8:45 am]

BILLING CODE 4310–55–P

DEPARTMENT OF THE INTERIOR

Fish and Wildlife Service

[RIN 1018–AG47]

Draft Policy on Maintaining the Ecological Integrity of the National Wildlife Refuge System; Notice

AGENCY: Fish and Wildlife Service, Interior.

ACTION: Notice.

SUMMARY: We (U.S. Fish and Wildlife Service) propose to establish an internal policy to guide personnel of the National Wildlife Refuge System (Refuge System) in implementing the clause of the National Wildlife Refuge System Improvement Act of 1997 (Refuge Improvement Act) that calls for maintaining the ''biological integrity, diversity, and environmental health'' of the Refuge System. The holistic integration of these three qualities constitutes ecological integrity. The concept of ecological integrity requires a frame of reference for natural conditions. Our frame of reference extends from 800 AD to 1800 AD. The former date marked the beginning of an ecological transformation associated with higher temperatures; the latter approximates the advent of the industrial era, including drastic and widespread habitat loss. In areas where pre-industrial European settlement was particularly intensive, however, our frame of reference may be shorter. Natural conditions also include those that would have persisted or evolved to the present time if European settlement and industrialization had not occurred. At each refuge, we ascertain natural conditions, assess current conditions, and strive to decrease the difference. However, we are especially concerned with ecological integrity of the Refuge System as a whole, which can conflict with the maintenance of ecological integrity at individual refuges. In some cases, we may compromise the ecological integrity of a refuge for the sake of maintaining a higher level of ecological integrity at the Refuge System scale.

DATES: Submit comments on or before December 1, 2000.

ADDRESSES: Send comments or questions concerning the draft ecological integrity policy via mail, fax, or email to: Elizabeth Souheaver, Chief, Branch of Wildlife Resources, National Wildlife Refuge System, U.S. Fish and Wildlife Service, 4401 North Fairfax Drive, Room 670, Arlington, Virginia 22203; fax (703) 358–2248; e-mail Ecointegrity__ policy_comments@ fws.gov.

FOR FURTHER INFORMATION CONTACT: Elizabeth Souheaver, Chief, Branch of Wildlife Resources, National Wildlife Refuge System, U.S. Fish and Wildlife Service, 4401 North Fairfax Drive, Room 670, Arlington, Virginia 22203; telephone (703) 358–1744.

SUPPLEMENTARY INFORMATION:

Disposition. The policy presented in this notice is a draft policy that may be modified pursuant to public comment. The finalized policy will constitute Part 601 Chapter 3 of the Fish and Wildlife Service Manual.

Comment Solicitation. We seek public comments on this draft policy and will consider all comments received during the 45-day comment period. You may submit comments by any one of several methods:

- You may mail comments to: Elizabeth Souheaver, Branch Chief of Wildlife Resources, National Wildlife Refuge System, U.S. Fish and Wildlife Service, 4401 North Fairfax Drive, Room 670, Arlington, VA 22203.
- You may fax comments to: Elizabeth Souheaver, Chief, Branch of Wildlife Resources, National Wildlife Refuge System, (703) 358–2248.

You may comment via the Internet to: *Ecointegrity__policy__comments@fws.gov.*

- You may hand-deliver comments to the U.S. Fish and Wildlife Service, National Wildlife Refuge System, Room 670, 4401 North Fairfax Drive, Arlington, VA.

Our practice is to make comments, including names and home addresses of respondents, available for public review during regular business hours. Individual respondents may request that we withhold their home address from the record, which we will honor to the extent allowable by law. There also may be circumstances in which we take the initiative to withhold from the record a respondent's identity, as allowable by law. If you wish that we withhold your name and/or address, you must state this prominently at the beginning of your comment. However, we will not consider anonymous comments. We will make all submissions from organizations or businesses and from individuals identifying themselves as representatives or officials of organizations or businesses, available for public inspection in their entirety.

We published a notice in the **Federal Register** on January 23, 1998 (63 FR 3583) notifying the public that we would be revising the Fish and Wildlife Service Manual, establishing regulations as they relate to the Refuge Improvement Act, and offering to send copies of specific draft Fish and Wildlife Service Manual chapters to anyone who would like to receive them. We will mail a copy of this draft Fish and Wildlife Service Manual ecological integrity chapter to those who requested one. In addition, this draft Fish and Wildlife Service Manual ecological integrity chapter will be available on the National Wildlife Refuge System web site (http://refuges.fws.gov) during the 45-day comment period.

Ecological Integrity Draft Policy (Fish and Wildlife Service Manual, Part 601, Draft Chapter 3)

3.1 What Is the Purpose of This Chapter?

This chapter provides policy for maintaining and restoring the biological integrity, biological diversity, and environmental health of the National Wildlife Refuge System. Throughout this policy, we use the term ''ecological integrity'' to refer to biological integrity, biological diversity, and environmental health.

3.2 What Is the Scope of This Policy?

This policy applies to the National Wildlife Refuge System as a whole and to all individual units within the System.

3.3 What Is the Ecological Integrity Policy?

We will, first and foremost, maintain existing levels of ecological integrity at all landscape scales. In addition, we will restore lost elements of ecological integrity at all landscape scales where it is consistent with refuge purposes.

3.4 What Are the Objectives of This Policy?

A. Provide guidelines for determining what conditions constitute ecological integrity.

B. Provide guidelines for determining how to maintain existing levels of ecological integrity.

C. Provide guidelines for determining how and when to restore lost elements of ecological integrity.

3.5 What Is the Authority for This Policy?

The authority for this draft policy is the National Wildlife Refuge System Administration Act of 1966 as amended by the National Wildlife Refuge System Improvement Act of 1997, 16 U.S.C. 668dd–668ee (Refuge Administration Act). This law states that ''In administering the System, the Secretary shall—(A) Provide for the conservation of fish, wildlife, and plants, and their habitats within the System; (B) ensure that the biological integrity, diversity, and environmental health of the System are maintained for the benefit of present

and future generations of Americans; (C) plan and direct the continued growth of the System in a manner that is best designed to accomplish the mission of the System, to contribute to the conservation of the ecosystems of the United States, to complement efforts of States and other Federal agencies to conserve fish and wildlife and their habitats, and to increase support for the System and participation from conservation partners and the public; (D) ensure that the mission of the System described in paragraph (2) and the purposes of each refuge are carried out, except that if a conflict exists between the purposes of a refuge and the mission of the System, the conflict shall be resolved in a manner that first protects the purposes of the refuge, and, to the extent practicable, that also achieves the mission of the System; * * *'' The law also provides that, in administering the National Wildlife Refuge System, ''* * * the Secretary is authorized to * * * Issue regulations to carry out this Act.''

3.6 What Do These Terms Mean?

A. *Biological diversity.* The variety of life and its processes, including the variety of living organisms, the genetic differences among them, and communities and ecosystems in which they occur.

B. *Biological integrity.* Biotic composition, structure, and functioning at genetic, organism, and community levels consistent with natural conditions, including the natural biological processes that shape genomes, organisms, and communities.

C. *Ecological integrity.* Biological diversity, biological integrity, and environmental health.

D. *Environmental health.* Composition, structure, and functioning of soil, water, air, and other abiotic features consistent with natural conditions, including the natural abiotic processes that shape the environment.

E. *Native.* Not introduced. Present under natural conditions.

F. *Natural conditions.* Composition, structure, and functioning of ecosystems thought to exist during a reference period from approximately 800 AD to the onset of European settlement or the industrial era and that would have persisted or evolved to the present time if European settlement had not occurred or the industrial era had not arrived. Our assessment of natural conditions is based on sound professional judgment.

G. *Sound professional judgment.* A finding, determination, or decision that is consistent with principles of sound fish and wildlife management and administration, available science and resources, and adherence to the requirements of the National Wildlife Refuge System Administration Act of 1966 (16 U.S.C. 668dd–668ee), and other applicable laws. Included in this finding, determination, or decision is a refuge manager's field experience and knowledge of the particular refuge's resources.

3.7 What Are the Principles Underlying This Policy?

A. Wildlife First

The Refuge Administration Act clearly establishes that wildlife conservation is the singular National Wildlife Refuge System mission. House Report 105–106 accompanying the National Wildlife Refuge System Improvement Act of 1997 states ''* * * the fundamental mission of our Refuge System is wildlife conservation: wildlife and wildlife conservation must come first.'' Maintaining biological integrity, biological diversity, and environmental health are integral and high priority components of wildlife conservation.

B. Maintaining Ecological Integrity of the System and Accomplishing Refuge Purposes

Each refuge will be managed to fulfill refuge purposes as well as to help fulfill the System mission. If a conflict exists between managing for refuge purposes and the System mission, the conflict will be resolved in a manner that first protects the refuge purposes, and, to the extent practicable, that also achieves the System mission. Likewise, if a conflict exists between managing for refuge purposes and maintaining or restoring the ecological integrity of the System, the conflict will be resolved in a manner that first protects the refuge purposes, and, to the extent practicable, that also maintains or restores the ecological integrity of the System. When refuge managers select management actions that fulfill refuge purposes, they will follow as closely as possible the guidelines provided in this ecological integrity policy so as to maximize our ability to maintain the ecological integrity of the System while fulfilling refuge purposes. These decisions are based on sound professional judgment.

C. Ecological Integrity in a Landscape Context

Biological integrity, biological diversity, and environmental health occur at various landscape scales from local to ecosystem, national, and international. All refuges have varying levels of biological integrity, biological diversity, and environmental health, and they contribute to ecological integrity at multiple landscape scales. At the local landscape scale, ecological integrity varies at individual refuges to the extent that refuge habitats have been altered and natural conditions have been compromised. Also, refuges contribute to ecological integrity at other landscape scales, especially when they provide for populations and habitats that have been lost at the larger landscape scales. When determining strategies to maintain and restore ecological integrity, we consider refuges in the context of multiple landscape scales from local to international.

D. Maintenance and Restoration of Ecological Integrity

We will, first and foremost, maintain existing levels of ecological integrity at all landscape scales. In addition, we will restore lost elements of ecological integrity at all landscape scales where it is consistent with refuge purposes. Maintaining and restoring ecological integrity helps to minimize the effects of further loses of natural conditions at all landscape scales.

E. Management Based on Goals and Objectives

Refuge purposes and the System mission serve as the basis for goals and objectives at all levels of the System (*e.g.*, System, Regional, ecosystem, and refuge level). When we develop these goals and objectives we include goals and objectives for maintaining and restoring the ecological integrity of the System as described in this policy.

F. Wildlife and Habitat Management

Refuge management ranging from preservation to active manipulation of habitats and populations is necessary to maintain ecological integrity. We favor management that mimics natural processes to achieve refuge purposes, goals and objectives, and to help fulfill the System mission, goals and objectives. Our management may differ from the frequency and timing of natural processes when necessary to compensate for the loss of habitat that existed under natural conditions at landscape scales beyond the refuge boundaries.

G. Adaptive Management

We make management decisions based on sound professional judgment and we evaluate the effectiveness of these decisions by comparing results to desired outcomes. If the results are unsatisfactory, we assess the causes of failure and adapt our management decisions accordingly. In part, we base management decisions on natural resource related research that has been

conducted on refuges. This type of research adds to the general body of information related to natural resource management and aids us in continually adapting our management decisions. We generally encourage natural resource related research on refuges.

H. Sound Professional Judgment

We use sound professional judgment to determine what conditions constitute ecological integrity, how to maintain existing levels of ecological integrity; and how and when to restore lost elements of ecological integrity. These determinations are inherently complex and require us to consider our field experiences and knowledge of refuge resources, particularly biological resources, and make conclusions that are consistent with principles of sound fish and wildlife management and administration, available scientific information, and applicable laws. We consult with others inside and outside the Service as necessary.

3.8 What are our responsibilities?

A. Director

(1) Provides national policy, goals and objectives for maintaining and restoring the ecological integrity of the System.

(2) Ensures that national plans and partnerships support maintaining and restoring the ecological integrity of the System.

(3) Ensures that the national land acquisition strategy for the System is designed to maintain the ecological integrity of the System at all landscape scales.

B. Regional Director

(1) Provides regional policy, goals and objectives for maintaining and restoring the ecological integrity of the System. Regional policy will include guidance pertaining to the relative merits of pursuing ecological integrity on a particular refuge versus pursuing ecological integrity for other landscape scales.

(2) Ensures that regional and ecosystem plans, and regional partnerships support the maintenance and restoration of Refuge System ecological integrity.

(3) Resolves conflicts that arise between maintaining ecological integrity at the refuge landscape scale and maintaining ecological integrity at larger landscape scales.

C. Regional Refuge Chief

(1) Ensures that individual refuge Comprehensive Conservation Plans support the maintenance and restoration of Refuge System ecological integrity.

(2) Reviews and ensures that refuge management programs that occur on many refuges (*e.g.*, fire management) are consistent with this policy.

D. Refuge Manager

(1) Follows the procedure outlined in section 3.9 of this chapter.

(2) Incorporates the principles of this policy into all refuge management plans and actions.

(3) Ensures that refuge management plans, goals and objectives are consistent with System, regional and ecosystem goals and objectives to maintain ecological integrity.

3.9 How do we implement this policy?

The Director, regional directors, regional chiefs and refuge managers carry out their responsibilities as specified in section 3.8 of this chapter. In addition, refuge managers:

A. Identify the refuge's purposes.

B. Ascertain natural conditions for the refuge, including representative successional stages.

C. Assess current conditions and compare them to natural conditions to determine the most appropriate management strategies for maintaining and restoring ecological integrity. This assessment includes determining the capabilities and limitations of the refuge to maintain and restore ecological integrity.

D. Consider the refuge's importance to local, ecosystem, national and international landscape scales of ecological integrity.

E. Identify the refuge's roles and responsibilities within the Regional and System administrative levels.

F. Consider the relationships among biological integrity, biological diversity and environmental health, and resolve conflicts that may result when attempting to maintain and restore all three.

G. Consider refuge purposes and, in coordination with the comprehensive conservation planning process, prescribe appropriate wildlife and habitat management to maintain and restore ecological integrity at the appropriate landscape scales.

H. Evaluate the effectiveness of our management by comparing results to desired outcomes. If the results of our management strategies are unsatisfactory, assess the causes of failure and adapt our strategies accordingly.

3.10 What factors do we consider when maintaining and restoring ecological integrity?

This section provides guidance for maintaining and restoring each component of ecological integrity; that is, biological integrity, biological diversity, and environmental health. We plan for the maintenance and restoration of each component, while considering all three components in an integrated and holistic manner.

A. Biological Integrity

We evaluate biological integrity by examining the extent to which biological composition, structure, and function have been altered from natural conditions. Biological composition refers to biological components such as genes, populations, species, and communities. Biological structure refers to the organization of biological components, such as gene frequencies, social structures of populations, food webs of species, and niche partitioning within communities. Biological function refers to the processes undergone by biological components, such as genetic recombination, population migration, the evolution of species, and community succession.

Biological integrity lies along a continuum from a biological system completely altered by industrial development to a completely natural system. No landscape retains absolute biological integrity. However, we strive to prevent the further loss of natural biological features and processes; that is, biological integrity.

Maintaining or restoring biological integrity is not the same as maximizing biological diversity. Maintaining biological integrity may entail managing for a single species or community at some refuges and combinations of species or communities at other refuges. For example, a refuge may contain critical habitat for an endangered species. Maintaining that habitat (and, therefore, that species), even though it may reduce biological diversity at the local landscape scale, helps maintain biological integrity and biological diversity at the national landscape scale.

In deciding which management activities to conduct to accomplish refuge purposes while maintaining biological integrity, we start by considering how the ecosystem functioned under natural conditions. For example, we consider the natural frequency and timing of processes such as flooding, fires, and migration. Our management will mimic these natural processes in natural frequencies and timing at the local landscape scale, where they support accomplishing refuge purposes.

We may find it necessary to modify the frequency and timing of natural processes at the local landscape scale to fulfill refuge purposes or to contribute

to ecological integrity at larger landscape scales. For example, under natural conditions, an area may have flooded only a few times per decade. Migratory birds dependent upon wetlands may have used the area in some years, and used other areas that flooded in other years. Because many wetlands have been converted to agriculture or other land uses, the remaining wetlands must produce more habitat, more consistently, to support wetland-dependent migratory birds. Therefore, to conserve biological integrity at larger landscape scales we may flood areas more frequently and for longer periods of time than they were flooded under natural conditions.

B. Biological diversity

We evaluate biological diversity at various taxonomic levels, including class, order, family, genus, species, subspecies, and—for purposes of Endangered Species Act implementation—distinct population. These evaluations of biological diversity begin with population surveys and studies of flora and fauna. The System's focus is on native species and natural communities.

We also evaluate biological diversity at various landscape scales, including local, ecosystem, national, and international. On refuges, we typically focus our evaluations of biological diversity at the local scale; however, these local evaluations can contribute to assessments at larger landscape scales.

We strive to maintain populations of breeding individuals that are genetically viable and functional. We provide for the breeding, migrating, and wintering needs of migratory species. We also strive to maximize the size of habitat blocks and maintain connectivity between blocks of habitats, unless such connectivity causes adverse effects on wildlife or habitat (*e.g.,* by facilitating the spread of invasive species).

At the community level, the most reliable indicator of biological diversity is plant community composition. We use the National Vegetation Classification System to identify biological diversity at this level.

C. Environmental Health.

We evaluate environmental health by examining the extent to which environmental composition, structure, and function have been altered from natural conditions. Environmental composition refers to abiotic components such as air, water, and soils, all of which are generally interwoven with biotic components (*e.g.,* decomposers live in soils). Environmental structure refers to the organization of abiotic components, such as atmospheric layering, aquifer structure, and topography. Environmental function refers to the processes undergone by abiotic components, such as wind, evaporation, and erosion. A diversity of abiotic composition, structure, and function tends to support a diversity of biological composition, structure, and function.

Environmental health affects biological integrity at all levels. Consistent with the wildlife first principle, we are especially concerned with environmental features as they affect living organisms. For example, at the genetic level, we manage for environmental health by preventing chemical contamination of air, water, and soils that may interfere with reproductive physiology or stimulate high rates of mutation. Such contamination includes carcinogens and other toxic substances that are released within or outside of refuges.

At the population and community levels, we consider the habitat components of food, water, cover, and space. Food and water may become contaminated with chemicals that are not naturally present. Activities such as logging and mining or structures such as buildings and fences may modify security or thermal cover. Unnatural noise and light pollution also compromise security. Unnatural physical structures, including buildings, reservoirs, and other infrastructure, may displace space. Refuge facility construction and maintenance projects necessary to accomplish refuge purposes should be designed to minimize their impacts on the environmental health of the refuge.

3.11 How Do We Apply Our Management Strategies to Maintain and Restore Ecological Integrity?

We strive to manage for ecological integrity in a holistic manner by optimizing the combination of biological integrity, biological diversity, and environmental health. We balance these three components of ecological integrity by considering refuge purposes, landscape scales, and the wildlife first principle. Considered independently, management strategies to maintain and restore biological integrity, biological diversity, and environmental health may conflict.

For example, physical structures and chemical applications are often necessary to maintain biological integrity and to fulfill refuge purposes. We may use dikes and water control structures to maintain and restore natural hydrological cycles, or use rotenone to eliminate invasive carp from a pond. These unnatural physical alterations and chemical applications would compromise environmental health if considered in isolation, but they may be appropriate management actions for maintaining ecological integrity when they are essential for maintaining biological integrity and accomplishing refuge purposes.

We may remove physical structures to promote endangered species recovery in some areas, or we may remove plants or animals (*e.g.,* beavers) to protect structures (*e.g.,* dikes), depending upon refuge purposes. Unless we determine that a species was present in the area of a refuge under natural conditions, we will not introduce or maintain the presence of that species for the purpose of biological diversity. We may make exceptions where areas are essential for the conservation of a threatened or endangered species and suitable habitats are not available elsewhere. In such cases, we strive to minimize unnatural effects and to restore or maintain natural processes and ecosystem components to the extent practicable without jeopardizing refuge purposes.

3.12 What Do We Use as a Frame of Reference for Natural Conditions?

We examine the time period from 800 AD to European settlement or to the industrial era to choose a timeframe that is appropriate for determining natural conditions for a given area of the country. In each area of the country, the timeframe for determining natural conditions must be long enough to define the full range of an area's plant community succession, fire regimes, hydrology, and climatic cycles. Natural conditions also may include those natural evolutionary forces and events, such as range expansions, that would have occurred if European settlement had not occurred or the industrial era had not arrived.

We use 800 AD as the starting point for natural conditions because it marks a major ecological transition in North America. The period from 800 AD to the industrial era includes warm, cool, and moderate climates that supported a variety of naturally occurring ecosystems. We use both European settlement and the industrial era as end points for determining natural conditions because we recognize both for causing landscape alterations. European settlers cleared land, established farms, and built towns and cities. Their impacts on the landscape varied, depending on density and land use. During the industrial era, the use of intensive energy sources, such as fossil fuels, have resulted in degradation and

elimination of habitats, exterpitation of species, and created a need for both local and landscape level conservation efforts.

In the United States, European settlement and the industrial era began approximately 1600 AD and 1800 AD, respectively. In some areas the land use changes that degrade or destroy wildlife habitat did not begin until much later than 1800, particularly in Alaska. In these areas, we may extend the frame of reference for natural conditions beyond 1800.

In some cases, non-natural and irreversible changes have occurred since the industrial era. For example, some areas have been converted to urban or industrial uses, some species have been driven to extinction, and widespread phenomena like global warming may increasingly impact ecosystems. We acknowledge the existence of such irreversible, non-natural changes and strive to maintain remaining levels of ecological integrity without investing resources in futile management activities. However, where feasible we will attempt to mimic the structure, composition and function of natural conditions.

3.13 Where Do We Get Information on Natural Conditions?

Information on natural conditions may be ethnographic, historical, archeological, or paleoecological. Ethnographic information consists primarily of Native American oral traditions and belongings passed down through many generations. Historical information includes the written and, in some cases, the pictographic accounts of explorers, surveyors, traders, and others present in the United States prior to the industrial era. Archeological information comes from collections of cultural artifacts maintained by scientific institutions. Paleoecological information comes from a variety of ecological artifacts including fossils, packrat middens, pollen cores, soil sediments, and tree rings.

We obtain information on natural conditions from our investigations and from partners in academia, conservation organizations, and other Federal, State, Tribal, and local government agencies. In many cases, we use historical vegetation maps to provide data on natural conditions. Such historical maps are usually drawn at relatively coarse scales, perhaps to the level of vegetation alliance. Small areas such as bogs would have gone undocumented or undetected in the historical or paleoecological records, and generally a comprehensive list of plant and animal species is not available or necessary. The determination of natural species and ecosystem composition will be based on sound professional judgment. We periodically update our information on natural conditions with results from ongoing archeological and paleoecological studies.

When information on natural conditions is not available for a particular area, we obtain information on natural conditions of nearby areas that have similar environmental traits at a broad scale, including topography, geology, soils, and climate. We use these conditions as a proxy for natural conditions of the area in question.

3.14 How Do We Incorporate Information From the Natural Conditions Reference Period Into Our Management Decisions?

Maintaining biological integrity, biological diversity, and environmental health requires an ecological frame of reference. This frame of reference allows us to contrast current conditions with the natural conditions that existed prior to European settlement and the advent of the industrial era. The reference period guides us in two ways. It provides information on how the landscape looked prior to changes in land use that destroyed and fragmented habitats and resulted in diminished wildlife populations and the extirpation or extinction of species. It also allows us to examine how natural ecosystems function and maintain themselves. We use these conditions as a frame of reference in which to set current management goals.

We use the natural conditions frame of reference to identify composition, structure, and functional processes that naturally shaped ecosystems. We especially seek to identify keystone species, indicator species, and types of communities that occurred during the frame of reference. We also seek to ascertain basic information on natural structures such as predator/prey relationships and topography. Finally, we seek to identify the scale and frequency of processes that accompanied these components and structures, such as fire regimes, flooding events, and plant community succession. Where feasible, we also pursue ecological integrity by eliminating unnatural biotic and abiotic features and processes not necessary to accomplish refuge purposes.

We do not expect, however, to reconstruct a complete inventory of components, structures, and functions for any successional stage occurring during the frame of reference. Rather, we use sound professional judgment to fit the pieces together as if building a puzzle. For example, if there is fossilized evidence that beavers lived in an area, then we may conclude that there were beaver dams with associated floral and faunal components, community structure, and hydrological functions. Similarly, if tree ring analysis indicates a highly regular fire regime of every 10–15 years in a ponderosa pine forest, we may conclude that this functioned to maintain an understory with a relatively open structure, with a community of plants and animals typical of open-structured ponderosa pine forests.

We ensure that our management activities result in the establishment of a community that fits within the natural successional series, unless doing so conflicts with accomplishing refuge purposes. For example, if we determine that an area in question was an aspen parkland in 1800, we may manage for aspen parkland or any other community that fits within the natural successional series, with a focus on natural communities and ecological processes that are rare, declining, or unique. We often choose to maintain non-climax communities pursuant to refuge purposes or to contribute to ecological integrity at the regional, national, or international landscape scale. We favor techniques such as fire or flooding that mimic or result in natural processes to maintain these non-climax communities. However, where not precluded by refuge purposes, we allow or, if necessary, encourage natural successional processes.

If there is evidence that certain successional stages naturally were precluded, we do not attempt to manage for those stages. For example, if a volcanic eruption in the 12th century impounded water that flooded a forest, creating a lake in the process, we would not drain the lake to reproduce the forest. Reproducing conditions that naturally ceased to exist compromises ecological integrity.

3.15 How Do We Manage Populations To Maintain and Restore Ecological Integrity?

We maintain, or contribute to the maintenance of, viable populations of native species. We design our wildlife population management strategies to support accomplishing refuge purposes while maintaining or restoring ecological integrity. We formulate refuge goals and objectives for population management to maintain natural densities, social structures, and population dynamics at the local level, except where precluded by refuge purposes or by population objectives set by national plans and programs—such

as the North American Waterfowl Management Plan—in which the System is a partner.

Natural densities are relatively stable for some species and variable for others. We manage populations for natural densities and levels of variation, while assuring that densities of endangered or otherwise rare species are sufficient for maintaining viable populations.

On some refuges, including many of those having the purpose of migratory bird conservation, we establish goals and objectives to maintain densities higher than those that would naturally occur at the refuge level because of the loss of surrounding habitats. By maintaining higher densities at the refuge level, we more closely approximate natural levels at larger landscape scales such as flyways. We try to prevent, however, densities at excessive levels that result in adverse effects on wildlife and habitat. The effects of producing densities that are too high may include disease, excessive nutrient accumulation and the competitive exclusion of other species. We use sound professional judgment to determine prudent limits to densities.

We consider population parameters such as sex ratios and age class distributions when managing populations to maintain and restore ecological integrity. Within the constraints of refuge purposes, we set our goals and objectives for these parameters within the range of values occurring under natural conditions, especially for resident populations. For example, ungulate populations with natural social structures are characterized by a high percentage of males with significant horns or antlers that are attractive to hunters and the viewing public alike. Population management plans, goals, and objectives for migratory populations generally are set at ecological scales broader than the refuge level, although refuges may play important roles in these efforts.

We encourage cooperation and coordination with State fish and wildlife management agencies in setting refuge population management goals and objectives. Regulations permitting hunting and fishing within the System will be, to the extent consistent with this policy, in keeping with State fish and wildlife laws, regulations, and management plans.

We support the reintroduction of extirpated native species. We consider such reintroduction in the context of surrounding landscapes. We do not introduce species on refuges outside their historic range or introduce species if we determine that they were naturally extirpated, unless such introduction is essential for the survival of a species and prescribed in an endangered species recovery plan, or is essential for the control of an invasive species and prescribed in an integrated pest management plan.

3.16 How Do We Manage Habitats To Maintain and Restore Ecological Integrity?

We maintain existing levels of ecological integrity at all landscape scales. In addition, we will restore lost elements of ecological integrity at all landscape scales where it is consistent with refuge purposes. Maintaining and restoring ecological integrity helps to minimize the effects of further loses of natural conditions at all landscape scales.

Our habitat management plans call for the appropriate management strategies that mimic natural conditions and accomplish refuge objectives. For example, prescribed burning to maintain natural fire regimes or water level management to mimic natural hydrological cycles are often necessary to maintain natural plant and animal communities in fragmented landscapes. Farming, haying, logging, livestock grazing, and other extractive activities are permissible habitat management practices only when prescribed in plans to meet wildlife or habitat management objectives, and only when more natural methods, such as fire or grazing by native herbivores, are not feasible.

We do not allow refuge uses or management practices that result in the maintenance of non-native plant communities unless we determine that there is no other feasible alternative for accomplishing refuge purposes. For example, where we do not require farming to accomplish refuge purposes, we cease farming and strive to restore natural habitats. Generally, farming must be identified as an important contribution to ecological integrity at larger ecosystem, regional, or national scales. Where past land uses and management practices have modified habitats, and where restoration is feasible, we restore natural habitats in the pursuit of ecological integrity. We use native seed sources in ecological restoration. We do not use genetically modified organisms in refuge management unless we determine their use essential to accomplishing refuge purposes and the Director approves the use.

3.17 How Do We Manage Non-Native Species To Maintain and Restore Ecological Integrity?

We prevent the introduction of invasive species, detect and control populations of invasive species, and provide for restoration of native species and habitat conditions in invaded ecosystems. We develop integrated pest management strategies that incorporate the most effective combination of mechanical, chemical, biological, and cultural controls while considering the effects on environmental health.

We require no action to reduce or eradicate self-sustaining populations of non-native, non-invasive species (e.g., pheasants) unless those species interfere with accomplishing refuge purposes. We do not, however, manage habitats to increase populations of these species unless such habitat management supports accomplishing refuge purposes.

3.18 How Does This Policy Affect The Acquisition Of Lands For The System?

We consider the mission, goals, and objectives of the System in planning for its strategic growth. We will take a proactive approach to identifying lands, from national and regional perspectives, that are critical for maintaining or restoring the ecological integrity of the System. We will integrate this approach into all Service strategies and initiatives related to the strategic growth of the System. We incorporate the guidance in this chapter when we evaluate the potential of an area to contribute to the conservation of the ecosystems of the United States. When evaluating potential new refuges, we consider how such refuges will contribute to maintaining the ecological integrity of the System.

We use the Land Acquisition Priority System to rank potential acquisitions once the Director approves significant expansions or new refuges. Our Land Acquisition Priority System includes components that gauge the contributions of refuges to maintaining and restoring ecological integrity.

3.19 What Is The Relationship Between Ecological Integrity And Compatibility?

When completing compatibility determinations, refuge managers use sound professional judgment to determine if a refuge use will materially interfere with or detract from the fulfillment of the System mission or the refuge purposes. Inherent in fulfilling the System mission is not degrading the ecological integrity of the refuge and the System. Refuge uses that we reasonably may anticipate to conflict with maintaining the ecological integrity of the refuge or the System are contrary to fulfilling the System mission and are therefore not compatible. Specific policy for compatibility is found in 603 FW 2.

3.20 What Is The Relationship Between Ecological Integrity and Comprehensive Conservation Planning?

We integrate the principles of this policy into all aspects of comprehensive conservation planning as we write plans to direct long range refuge management and identify desired future conditions for planned refuges (602 FW 1.7 D).

3.21 How Do We Protect Ecological Integrity From Actions Outside Of Refuges?

When actions of others that occur off refuge lands or waters that injure or destroy the natural resources of a refuge, refuge managers should address those problems as soon as possible to protect the property of the United States and to protect the biological integrity, biological diversity, and environmental health of the refuge and the System. The refuge manager should first inform the person or entity responsible and request cooperation. Our first effort to avoid and rectify injury should always be partnerships or voluntary cooperation with adjacent landowners and others. If these efforts fail to protect the refuge, refuge managers should request the Office of the Solicitor for assistance in pursuing civil remedies, such as an injunction or damages, just as any other landowner would.

Primary Author: Brian Czech, Conservation Biologist, Branch of Wildlife Resources, National Wildlife Refuge System, U.S. Fish and Wildlife Service, is the primary author of this notice.

Dated: September 24, 2000.

Jamie Rappaport Clark,

Director, U.S. Fish and Wildlife Service.

[FR Doc. 00–26398 Filed 10–16–00; 8:45 am]

BILLING CODE 4310–55–U

DEPARTMENT OF THE INTERIOR

Bureau of Land Management

[MT–921–01–1320–EL–P; MTM 88405]

Notice of Competitive Coal Lease Offering by Sealed Bid

AGENCY: Bureau of Land Management, Montana State Office

ACTION: Notice of competitive coal lease offering by sealed bid MTM 88405.

SUMMARY: Notice is hereby given that the coal resources in the lands described below in Big Horn County, Montana, will be offered for competitive lease by sealed bid. This offering is being made as a result of an application filed by Spring Creek Coal Company, in accordance with the provisions of the Mineral Leasing Act of 1920, as amended (41 Stat. 437; 30 U.S.C. 181 *et seq.*).

The lease sale will be held at 11:00 a.m., Monday, November 27, 2000, in the main conference room, side B, at the Bureau of Land Management, 5001 Southgate Drive, Billings, Montana 59102. Bids for the tract will be in the form of sealed bids. Sealed bids clearly marked ''Sealed Bid for MTM 88405 Coal Sale—Not to be opened before 11:00 a.m., Monday, November 27, 2000'' must be submitted on or before 10:00 a.m., November 27, 2000, to the cashier, Bureau of Land Management, Montana State Office, 5001 Southgate Drive, Post Office Box 36800, Billings, Montana 59107–6800.

An Environmental Assessment of the proposed coal development and related requirements for consultation, public involvement, and hearings have been completed in accordance with 43 CFR 3425. The results of these activities were a finding of no significant environmental impact.

The coal resource to be offered consists of all recoverable reserves in the following-described lands:

T. 8 S., R. 39 E., P.M.M.
Sec. 13: SW¼SW¼SW¼, SW¼SE¼SW¼SW¼
Sec. 14: S½SW¼NE¼SE¼, S½NE¼SE¼SE¼, NW¼NE¼SE¼SE¼, S½SE¼SE¼, NW¼SE¼SE¼
Sec. 23: NE¼NE¼, SE¼SW¼NW¼NE¼, N½SW¼NW¼NE¼, E½NW¼NE¼
Sec. 24: NW¼SE¼NW¼NW¼, N½SW¼NW¼NW¼, N½NW¼NW¼
Containing 150.00 acres, Big Horn County, Montana.

The tract in this lease offering contains split estate lands. The surface is not held by a qualified surface owner as defined in the regulations, 43 CFR 3400.0–5.

SUPPLEMENTARY INFORMATION: The tract will be leased to the qualified bidder of the highest cash amount provided that the high bid meets the fair market value of the coal resource. The minimum bid for the tract is $100 per acre or fraction thereof. No bid that is less that $100 per acre, or fraction thereof, will be considered. The bids should be sent by certified mail, return receipt requested, or be hand-delivered. The cashier will issue a receipt for each hand-delivered bid. *Bids received after 10:00 a.m., Monday, November 27, 2000, will not be considered.* The minimum bid is not intended to represent fair market value. The fair market value will be determined by the authorized officer after the sale.

If identical high bids are received, the tying high bidders will be requested to submit follow-up sealed bids until a high bid is received. All tie-breaking sealed bids must be submitted within 15 minutes following the Sale Official's announcement at the sale that identical high bids have been received.

A lease issued as a result of this offering will provide for payment of an annual rental of $3 per acre, or fraction thereof; and a royalty payable to the United States of 12.5 percent of the value of coal mined by surface methods and 8.0 percent of the value of coal mined by underground methods. The value of the coal shall be determined in accordance with 30 CFR 206.250.

Bidding instructions for the tract offered and the terms and conditions of the proposed coal lease are included in the Detailed Statement of Lease Sale. Copies of the statement and the proposed coal lease are available at the Montana State Office. Casefile MTM 88405 is also available for public inspection at the Montana State Office.

FOR FURTHER INFORMATION CONTACT: Bettie Schaff, Land Law Examiner or Rebecca Good, Coal Coordinator at (406) 896–5063 or 896–5080, respectively.

Dated: October 11, 2000.

Randy D. Heuscher,

Chief, Branch of Solid Minerals.

[FR Doc. 00–26560 Filed 10–16–00; 8:45 am]

BILLING CODE 4310–$$–P

DEPARTMENT OF THE INTERIOR

National Park Service

Lower St. Croix National Scenic Riverway; Environmental Impact Statement

AGENCY: National Park Service, Minnesota Department of Natural Resources, Wisconsin Department of Natural Resources.

ACTION: Notice of availability of the final cooperative management plan/final environmental impact statement for the Lower St. Croix National Scenic Riverway, Minnesota and Wisconsin.

SUMMARY: Pursuant to section 102(2) of the National Environmental Policy Act of 1969, the National Park Service, Minnesota Department of Natural Resources, and Wisconsin Department of Natural Resources announce the availability of the final cooperative management plan/final environmental impact statement (FCMP/FEIS) for the Lower St. Croix National Scenic Riverway.

The purpose of the cooperative management plan is to set forth the basic management philosophy for the riverway and to provide the strategies for addressing issues and achieving

identified management objectives. The FCMP/FEIS describes and analyzes the environmental impacts of a proposed action and four action alternatives for the future management direction of the riverway. The FCMP/FEIS also evaluates a preferred management structure and two management structure options for the riverway. No action alternatives are evaluated for both management direction and management structure.

The responsible officials are Mr. William Schenk, Midwest Regional Director, National Park Service; Mr. Allen Garber, Commissioner, Minnesota Department of Natural Resources; and Mr. George Meyer, Secretary, Wisconsin Department of Natural Resources.

DATES: The no-action period on this FEIS will expire 30 days after the Environmental Protection Agency has published a notice of availability of the FEIS in the **Federal Register**.

ADDRESSES: Copies of the FCMP/FEIS are available by request by writing the Superintendent, Lower St. Croix National Scenic Riverway, P.O. Box 708, St. Croix Falls, WI 54024–0708, by telephone at 715–483–3284, extension 625 or by e-mail from SACN_Superintendent@nps.gov. The document can be picked-up in person at the Lower St. Croix National Scenic Riverway headquarters at 401 Hamilton Street North, St. Croix Falls, WI.

FOR FURTHER INFORMATION CONTACT: Superintendent, Lower St. Croix National Scenic Riverway at the address and telephone listed above.

SUPPLEMENTARY INFORMATION: The Lower St. Croix National Scenic Riverway is a narrow corridor that runs for 52 miles along the boundary of Minnesota and Wisconsin, from St. Croix Falls/Taylors Falls to the confluence with the Mississippi River at Prescott/Point Douglas. The National Park Service manages a portion of the upper 27 miles of lands and waters of this corridor. The states of Minnesota and Wisconsin administer the lower 25 miles. The states and the federal government jointly conduct planning for the riverway.

The Draft Cooperative Management Plan and Draft Environmental Impact Statement (DCMP/DEIS) for the Lower St. Croix National Scenic Riverway was released to the public on September 17, 1999. The public comment period ended November 30, 1999. About 650 copies of the document were distributed during this period. The managing agencies received almost 900 written responses during the public review period.

Modifications to the DGMP/DEIS have been made based on public comment received and on further impact analysis.

Dated: October 5, 2000.

William W. Schenk,

Regional Director, Midwest Region.

[FR Doc. 00–26604 Filed 10–16–00; 8:45 am]

BILLING CODE 4310–70–P

DEPARTMENT OF THE INTERIOR

National Park Service

Official Underground Railroad Network to Freedom Symbol

SUMMARY: This notice establishes the official National Park Service symbol with the incorporating words ''Underground Railroad Network to Freedom'' carrying out the provisions of the National Underground Railroad Network to Freedom Act.

DATES: This action is effective October 17, 2000.

FOR FURTHER INFORMATION CONTACT: Diane Miller, National Coordinator, National Underground Railroad Network to Freedom Program, 1709 Jackson Street, Omaha, Nebraska 68102, telephone 402–221–3749.

SUPPLEMENTARY INFORMATION: The National Park Service has designated an official National Park Service symbol with the words ''Underground Railroad Network to Freedom'' fulfilling the mandate of the National Underground Railroad Network to Freedom Act. You may obtain a copy of the image incorporating the words ''Underground Railroad Network to Freedom'' from the National Coordinator at the address listed above. Notice is given that whoever manufactures, sells, or possesses this symbol embossed image, or any colorable limitation thereof, or photographs, prints or in any other manner makes or executes any engraving photograph or print, or impression in the likeness of this symbol, or any colorable imitation thereof, without authorization from the United States Department of the Interior is subject to the penalty provisions of section 701, Title 18 of the United States Code.

Dated: October 15, 2000.

William W. Schenk,

Regional Director, Midwest Region.

[FR Doc. 00–26605 Filed 10–16–00; 8:45 am]

BILLING CODE 4310–70–M

DEPARTMENT OF THE INTERIOR

Office of Surface Mining Reclamation and Enforcement

Notice of Proposed Information Collection

AGENCY: Office of Surface Mining Reclamation and Enforcement.

ACTION: Notice and request for comments.

SUMMARY: In compliance with the Paperwork Reduction Act of 1995, the Office of Surface Mining Reclamation and Enforcement (OSM) is announcing its intention to request approval for the collection of information for the permanent program performance standards—surface mining activities at 30 CFR part 816.

DATES: Comments on the proposed information collection must be received by December 18, 2000, to be assured of consideration.

ADDRESSES: Comments may be mailed to John A. Trelease, Office of Surface Mining Reclamation and Enforcement, 1951 Constitution Ave., NW, Room 210—SIB, Washington, DC 20240. Comments may also be submitted electronically to jtreleas@osmre.gov.

FOR FURTHER INFORMATION CONTACT: To request a copy of the information collection request, explanatory information and related form, contact John A. Trelease, at (202) 208–2783.

SUPPLEMENTARY INFORMATION: The Office of Management and Budget (OMB) regulations at 5 CFR 1320, which implementing provisions of the Paperwork Reduction Act of 1995 (Pub. L. 104–13), require that interested members of the public and affected agencies have an opportunity to comment on information collection and recordkeeping activities (see 5 CFR 1320.8(d)). This notice identifies information collections that OSM will be submitting to OMB for extension. These collections are contained in 30 CFR 816.

OSM has revised burden estimates, where appropriate, to reflect current reporting levels or adjustments based on reestimates of burden or respondents. OSM will request a 3-year term of approval for this information collection activity.

Comments are invited on: (1) The need for the collection of information for the performance of the functions of the agency; (2) the accuracy of the agency's burden estimates; (3) ways to enhance the quality, utility and clarity of the information collection; and (4) ways to minimize the information collection burden on respondents, such

as use of automated means of collection of the information. A summary of the public comments will accompany OSM's submission of the information collection request to OMB.

This notice provides the public with 60 days in which to comment on the following information collection activity:

Title: Permanent Program Performance Standards—Surface Mining Activities, 30 CFR Part 816.

OMB Control Number: 1029–0047.

Summary: Section 525 of the Surface Mining Control and Reclamation Act of 1977 provides that permittees conducting surface coal mining operations shall meet all applicable performance standards of the Act. The information collected is used by the regulatory authority in monitoring and inspecting surface coal mining activities to ensure that they are conducted in compliance with the requirements of the Act.

Bureau Form Number: None.

Frequency of Collection: Once, on occasion, quarterly and annually.

Description of Respondents: Surface coal mining operators.

Total Annual Responses: 731,787.

Total Annual Burden House: 355,405.

Dated: October 11, 2000.

Richard G. Bryson,

Chief, Division of Regulatory Support.

[FR Doc. 00–26559 Filed 10–16–00; 8:45 am]

BILLING CODE 4310–05–M

DEPARTMENT OF LABOR

Office of the Secretary

Submission for OMB Review; Comment Request

October 11, 2000.

The Department of Labor (DOL) has submitted the following public information collection requests (ICRs) to the Office of Management and Budget (OMB) for review and approval in accordance with the Paperwork Reduction Act of 1995 (Pub. L. 104–13, U.S.C. Chapter 35). A copy of each individual ICR, with applicable supporting documentation, may be obtained by calling the Department of Labor. To obtain documentation for BLS, ETA, PWBA, and OASAM contact Karin Kurz ((202) 693–4127 or by E-mail to Kurz-Karin@dol.gov). To obtain documentation for ESA, MSHA, OSHA, and VETS contact Darrin King ((202) 693–4129 or by E-Mail to King-Darrin@dol.gov).

Comments should be sent to Office of Information and Regulatory Affairs, Attn: OMB Desk Officer for BLS, DM, ESA, ETA, MSHA, OSHA, PWBA, or VETS, Office of Management and Budget, Room 10235, Washington, DC 20503 ((202) 395–7316), within 30 days from the date of this publication in the **Federal Register.** The OMB is particularly interested in comments which:

- Evaluate whether the proposed collection of information is necessary for the proper performance of the functions of the agency, including whether the information will have practical utility;
- Evaluate the accuracy of the agency's estimate of the burden of the proposed collection of information, including the validity of the methodology and assumptions used;
- Enhance the quality, utility, and clarity of the information to be collected; and
- Minimize the burden of the collection of information on those who are to respond, including through the use of appropriate automated, electronic, mechanical, or other technological collection techniques or other forms of information technology, *e.g.,* permitting electronic submission of responses.

Type of Review: Extension of a currently approved collection.

Agency: Employment Standards Agency (ESA).

Title: Authorization for Release of Medical Information.

OMB Number: 1215–0057.

Affected Public: Individuals or households.

Frequency: Once.

Number of Respondents: 2,700.

Number of Annual Responses: 2,700.

Estimated Time Per Response: 5 minutes.

Total Burden Hours: 225.

Total Annualized Capital/Startup Costs: $0.

Total Annual Costs (operating/maintaining systems or purchasing services): $0.

Description: The CM–936 is used to obtain a claimant's authorization for the Division of Coal Mine Workers' Compensation to obtain medical evidence in support of a black lung claim.

Type of Review: Extension of a currently approved collection.

Agency: Employment Standards Agency (ESA).

Title: Recordkeeping and Reporting Requirements, Construction.

OMB Number: 1215–0163.

Affected Public: Business or other for-profit and Not-for-profit institutions.

Frequency: Quarterly.

Number of Respondents: 100,000.

Number of Annual Responses: 103,711.

Estimated Time Per Response

Recordkeeping

Records Maintenance: 8 to 24 hours
Affirmative Action Plan, Initial Development: 18 hours
Affirmative Action Plan, Annual Update: 7.5 hours
Affirmative Action Plan, Maintenance: 7.5 hours

Reporting

CC–41 Quarterly Administrative Committee Report: 25 minutes
Compliance Reviews: 1–2 hours

Total Burden Hours: 4,841,475.

Total Annualized Capital/Startup Costs: $0.

Total Annual Costs (operating/maintaining systems or purchasing services): $0.

Description: Recordkeeping and reporting by Federal and Federally-assisted construction contractors and subcontractors is necessary to substantiate compliance with nondiscrimination and affirmative action contractual obligations.

Ira L. Mills,

Department Clearance Officer.

[FR Doc. 00–26635 Filed 10–16–00; 8:45 am]

BILLING CODE 4510–48–M

NATIONAL CREDIT UNION ADMINISTRATION

Sunshine Act Meeting

Time and Date: 10:00 a.m., Thursday, October 19, 2000.

Place: Board Room, 7th Floor, Room 7047, 1775 Duke Street, Alexandria, VA 22314–3428.

Status: Open.

Matters To Be Considered

1. Final IRPS 00–1, Amendments to NCUA's Chartering and Field of Membership Policies.
2. Requests from Three (3) Federal Credit Unions to Convert to Community Charters.
3. Request from a Federal Credit Union to Expand its Community Charter.
4. Delegations of Authority Related to the Prompt Corrective Action Regulations.
5. Proposed Interpretive Ruling and Policy Statement (IRPS) with Request for Comments Regarding Central Liquidity Facility (CLF).
6. Proposed Rule: Sections 706.6 through 706.17, NCUA's Rules and Regulations, Fair Credit Reporting.

7. Final Rule: Amendment to Part 792, Subparts C and E, NCUA's Rules and Regulations, Privacy Act.

8. NCUA's Overhead Transfer Rate for 2001.

Recess: 11:15 a.m.

Time and Date: 11:30 a.m., Thursday, October 19, 2000.

Place: Board Room, 7th Floor, Room 7047, 1775 Duke Street, Alexandria, VA 22314–3428.

Status: Closed.

Matters To Be Considered

1. Budget Reprogramming. Closed pursuant to exemptions (4) and (6).

2. Two (2) Personnel Matters. Closed pursuant to exemptions (2) and (6).

FOR FURTHER INFORMATION CONTACT: Becky Baker, Secretary of the Board, Telephone 703–518–6304.

Becky Baker,

Secretary of the Board

[FR Doc. 00–26717 Filed 10–13–00; 11:06 am]

BILLING CODE 7535–01–M

NATIONAL FOUNDATION ON THE ARTS AND THE HUMANITIES

National Endowment for the Arts; Leadership Initiatives Advisory Panel

Pursuant to Section 10(a)(2) of the Federal Advisory Committee Act (Public Law 92–463), as amended, notice is hereby given that two meetings of the Leadership Initiatives Advisory Panel (AccessAbility and Arts Education sections) to the National Council on the Arts will be held on October 20, 2000 and October 25, 2000 respectively. The panels will meet by teleconference as follows:

AccessAbility Section: from 1 p.m. to 2:30 p.m. in Room 528

Arts Education Section: from 4:30 p.m. to 5:30 p.m. in Room 703 at the Nancy Hanks Center, 1100 Pennsylvania Avenue, NW, Washington, DC, 20506.

These meetings are for the purpose of Panel review, discussion, evaluation, and recommendations on financial assistance under the National Foundation on the Arts and the Humanities Act of 1965, as amended, including information given in confidence to the agency. In accordance with the determination of the Chairman of May 12, 2000, these sessions will be closed to the public pursuant to subsection (c)(4),(6) and (9)(B) of section 552b of Title 5, United States Code.

Further information with reference to this meeting can be obtained from Ms. Kathy Plowitz-Worden, Office of Guidelines & Panel Operations, National Endowment for the Arts, Washington, DC, 20506, or call 202/682–5691.

Dated: October 13, 2000.

Kathy Plowitz-Worden,

Panel Coordinator, Panel Operations, National Endowment for the Arts.

[FR Doc. 00–26754 Filed 10–16–00; 8:45 am]

BILLING CODE 7537–01–U

NATIONAL SCIENCE FOUNDATION

Notice of Permits Issued Under the Antarctic Conservation Act of 1978

AGENCY: National Science Foundation.

ACTION: Notice of permits issued under the Antarctic Conservation of 1978, Public Law 95–541.

SUMMARY: The National Science Foundation (NSF) is required to publish notice of permits issued under the Antarctic Conservation Act of 1978. This is the required notice.

FOR FURTHER INFORMATION CONTACT: Nadene G. Kennedy, Permit Office, Office of Polar Programs, Rm. 755, National Science Foundation, 4201 Wilson Boulevard, Arlington, VA 22230.

SUPPLEMENTARY INFORMATION: On August 29, 2000, the National Science Foundation published a notice in the **Federal Register** of permit applications received. Permits were issued on October 5, 2000 to the following applicants:

Terry J. Wilson Permit No. 2001–009

Mahlon C. Kennicutt Permit No. 2001–012

Brenda Hall Permit No. 2001–013

William Swanson Permit No. 2001–019

Richard M. Jones Permit No. 2001–020

Nadene G. Kennedy,

Permit Officer.

[FR Doc. 00–26647 Filed 10–16–00; 8:45 am]

BILLING CODE 7555–01–P

NUCLEAR REGULATORY COMMISSION

[Docket Nos. 50–250 and 50–251; License Nos. DPR–31 and DPR–41]

In the Matter of Florida Power & Light Company (Turkey Point Units 3 and 4); Confirmatory Order Modifying Post-Three Mile Island Requirements Pertaining to Containment Hydrogen Monitors

I

Florida Power & Light Company (FPL or the licensee) is the holder of Facility Operating License Nos. DPR–31 and DPR–41 issued by the Nuclear Regulatory Commission (NRC or Commission) pursuant to 10 CFR part 50. The licenses authorize the operation of Turkey Point, Units 3 and 4, located in Dade County, Florida.

II

As a result of the accident at Three Mile Island, Unit 2 (TMI–2), the NRC issued NUREG–0737, ''Clarification of TMI Action Plan Requirements,'' in November 1980. Generic Letters 82–05 and 82–10, issued on March 17 and May 5, 1982, respectively, requested licensees of operating power reactors to furnish information pertaining to their implementation of specific TMI Action Plan items described in NUREG–0737. Orders were issued to licensees confirming their commitments made in response to the generic letters. The Confirmatory Order that was issued to FPL on March 14, 1983, required the licensee to implement and maintain the various TMI Action Plan Items, including Item II.F.1 Attachment 6, pertaining to monitoring of the hydrogen concentration in the containment following a safety injection.

The Confirmatory Order of March 14, 1983, imposed requirements upon the licensee to have continuous monitoring of containment hydrogen concentration provided in the control room, as described by TMI Action Plan Item II.F.1, Attachment 6. Information about hydrogen concentration supports the licensee's assessments of the degree of core damage and whether a threat to the integrity of the containment may be posed by hydrogen gas combustion. TMI Action Item II.F.1, Attachment 6 states:

> If an indication is not available at all times, continuous indication and recording shall be functioning within 30 minutes of the initiation of safety injection.

The requirement to have monitoring of the hydrogen concentration in the containment within 30 minutes following the start of safety injection has defined both design and operating characteristics for hydrogen monitoring systems at nuclear power plants since the implementation of NUREG–0737. In addition, the technical specifications of most nuclear power plants and NRC regulation 10 CFR 50.44, ''Standards for Combustible Gas Control System in Light-Water-Cooled Power Reactors,'' require availability of hydrogen monitors.

By letter dated June 21, 2000, FPL requested relief for the two Turkey Point units from the requirement to have indication of hydrogen concentration in the containment within 30 minutes of the initiation of safety injection.

Specifically, FPL requests relief from the requirement of establishing monitoring of hydrogen concentration in the containment within 30 minutes of the initiation of safety injection, and proposes that, in lieu of the current 30-minute time limit, risk-informed insights be used to determine the functional requirements for monitoring of containment hydrogen concentration that would allow extending the monitoring requirement time limit to more than 30 minutes following initiation of safety injection. The basis for this request was that the additional time would allow the operators to complete their initial accident assessment and mitigation duties before redirecting their attention to the relatively longer-term recovery actions, such as actuating the hydrogen recombiners that are not needed for more than 24 hours after an accident.

Significant improvements have been achieved since the TMI accident, in the areas of understanding risks associated with nuclear plant operations and developing better strategies for managing the response to potential severe accidents at nuclear power plants. Recent insights pertaining to plant risks and severe accident assessment tools have led the NRC staff to conclude that some TMI Action Plan items can be revised without reducing, and perhaps even enhancing the ability of licensees to respond to severe accidents. The NRC's efforts to understand the risks associated with commercial nuclear power plant operations more effectively and to reduce unnecessary regulatory burden on licensees and the public have prompted the NRC's decision to revise the post-TMI requirement to monitor containment hydrogen concentration.

Based on the staff's evaluation of the justification provided by the licensee, and on improved understanding of insights pertaining to plant risks, severe accident assessment, and emergency planning since the TMI–2 accident, the staff has concluded that the licensee's request should be approved. Giving the licensee the flexibility and responsibility for determining the appropriate time limit for establishing monitoring of containment hydrogen concentration will preclude control room personnel from being distracted from various important tasks in the early phases of accident mitigation, while allowing cognizant personnel, mostly outside the control room, to be aware of hydrogen concentration based on a risk-informed functional assessment at a reasonable time following an accident. Because the appropriate balance between control room activities and longer-term management of the response to severe accidents can best be determined by the licensee, the NRC staff has determined that the licensee may elect to either maintain the 30-minute time limit for monitoring of hydrogen in containment, as described by TMI Action Plan Item II.F.1, Attachment 6, in NUREG–0737, and required by the Confirmatory Order of March 14, 1983, or modify the time limit in the manner specified in the functional requirement described below:

Procedures shall be established for ensuring that monitoring of hydrogen concentration in the containment atmosphere is available in a sufficiently timely manner to support the implementation of the Turkey Point Units 3 and 4 Emergency Plan (and related procedures) and related activities such as guidance for severe accident management. Hydrogen monitoring will be initiated based on: (1) the appropriate priority for establishing monitoring of hydrogen concentration within the containment in relation to other activities in the control room; (2) the use of the monitoring of hydrogen concentration by decision makers for severe accident management and emergency response; and (3) insights from experience or evaluation pertaining to possible scenarios that result in significant generation of hydrogen that would be indicative of core damage or a potential threat to the integrity of the containment building. Affected licensing basis documents and other related documents will be appropriately revised and/or updated in accordance with applicable NRC regulations.

The licensee's Post-Accident Monitoring Instrumentation Technical Specifications and 10 CFR 50.44 require the licensee to maintain the ability to monitor hydrogen concentration in the containment. However, the details pertaining to the design and manner of operation of the hydrogen monitoring system are determined by the licensee.

III

Accordingly, pursuant to Sections 103, 104b, 161b, 161i, 161o, and 182 of the Atomic Energy Act of 1954, as amended, and the Commission's regulations in 10 CFR 2.202 and 10 CFR part 50, *it is hereby ordered* that NRC License Nos. DPR–31 and DPR–41 are modified as follows:

The licensee may elect to either maintain the 30-minute time limit for monitoring of hydrogen in the containment, as described by TMI Action Plan Item II.F.1, Attachment 6, in NUREG–0737 and required by the Confirmatory Order of March 18, 1983, or modify the time limit in the manner specified in Section II of this Order.

The Director, Office of Nuclear Reactor Regulation, may, in writing, relax or rescind any of the above conditions upon demonstration by the licensee of good cause.

IV

Any person adversely affected by this Confirmatory Order, other than the licensee, may request a hearing within 20 days of its issuance. Where good cause is shown, consideration will be given to extend the time to request a hearing. A request for extension of time must be made in writing to the Director, Office of Nuclear Reactor Regulation, U.S. Nuclear Regulatory Commission, Washington, DC 20555–0001, and include a statement of good cause for the extension. Any request for a hearing shall be submitted to the Secretary of the Commission, U.S. Nuclear Regulatory Commission, ATTN: Chief, Rulemakings and Adjudications Staff, Washington, DC 20555–0001. Copies of the hearing request shall also be sent to the Director, Office of Nuclear Reactor Regulation, U.S. Nuclear Regulatory Commission, Washington, D.C. 20555–0001, to the Assistant General Counsel for Materials Litigation and Enforcement at the same address, to the Regional Administrator, NRC Region II, Atlanta Federal Center, 23 T 85, 61 Forsyth Street, SW., Atlanta, Georgia 30303–3415, and to M.S. Ross, Attorney, Florida Power & Light, P.O. Box 14000, Juno Beach, Florida 33408–0420, attorney for the licensee. If such a person requests a hearing, that person will set forth with particularity the manner in which his interest is adversely affected by this Order and will address the criteria set forth in 10 CFR 2.714(d).

If a hearing is requested by a person whose interest is adversely affected, the Commission will issue an Order designating the time and place of any hearing. If a hearing is held, the issue to be considered at such hearing will be whether this Confirmatory Order should be sustained.

In the absence of any request for hearing, or written approval of an extension of time in which to request a hearing, the provisions specified in Section IV above will be final 20 days from the date of this Order without further order or proceedings. If an extension of time for requesting a hearing has been approved, the provisions specified in Section IV will be final when the extension expires if a hearing request has not been received.

Dated at Rockville, Maryland, this 5th day of October 2000.

For the Nuclear Regulatory Commission.

Samuel J. Collins,

Director, Office of Nuclear Reactor Regulation.

[FR Doc. 00–26644 Filed 10–16–00; 8:45 am]

BILLING CODE 7590–01–P

NUCLEAR REGULATORY COMMISSION

Sunshine Act Meeting

AGENCY HOLDING THE MEETING: Nuclear Regulatory Commission.

DATE: Weeks of October 16, 23, 30, November 6, 13, and 20, 2000.

PLACE: Commissioners' Conference Room, 11555 Rockville Pike, Rockville, Maryland.

STATUS: Public and Closed.

MATTERS TO BE CONSIDERED:

Week of October 16

Tuesday, October 17

11:25 a.m.
Affirmation Session (Public Meeting) (If needed)

Week of October 23—Tentative

Monday, October 23

1:55 p.m.
Affirmation Session (Public Meeting) (If needed)

Week of October 30—Tentative

There are no meetings scheduled for the Week of October 30.

Week of November 6—Tentative

There are no meetings scheduled for the Week of November 6.

Week of November 13—Tentative

Friday, November 17

9:25 a.m.
Affirmation Session (Public Meeting) (If needed)
9:30 a.m.
Briefing on Risk-Informed Regulation Implementation Plan (Public Meeting) (Contact: Tom King, 301–415–5790)

This meeting will be webcast live at the Web address: *www.nrc.gov/live.html.*

Week of November 20—Tentative

There are no meetings scheduled for the Week of November 20.

The schedule for Commission meetings is subject to change on short notice. To verify the status of meetings call (recording)—(301) 415–1292.

CONTACT PERSON FOR MORE INFORMATION: Bill Hill (301) 415–1661.

The NRC Commission Meeting Schedule can be found on the Internet at: http://www.nrc.gov/SECY/smj/schedule.htm.

This notice is distributed by mail to several hundred subscribers; if you no longer wish to receive it, or would like to be added to it, please contact the Office of the Secretary, Attn: Operations Branch, Washington, DC 20555 (301–415–1661). In addition, distribution of this meeting notice over the Internet system is available. If you are interested in receiving this Commission meeting schedule electronically, please send an electronic message to wmh@nrc.gov or dkw@nrc.gov.

Dated: October 13, 2000.

William M. Hill, Jr.,

Secy Tracking Officer, Office of the Secretary.

[FR Doc. 00–26783 Filed 10–13–00; 3:04 p.m.]

BILLING CODE 7590–01–M

NUCLEAR REGULATORY COMMISSION

Availability of NUREG–1307, Revision 9, ''Report on Waste Burial Charges. Changes in Decommissioning Waste Disposal Costs at Low-Level Waste Burial Facilities''

AGENCY: Nuclear Regulatory Commission.

ACTION: Notice of availability.

SUMMARY: The Nuclear Regulatory Commission is announcing the completion and availability of NUREG–1307, Revision 9, ''Report on Waste Burial Charges,'' dated September 2000.

ADDRESSES: NUREG–1307 may be purchased from The Superintendent of Documents, U.S. Government Printing Office, P.O. Box 37082, Washington, DC 20402–9328; *www.access.gpo.gov/su docs;* 202–512–1800; or The National Technical Information Service, Springfield, Virginia 22161–0002; *www.ntis.gov;* 1–800–553–6847 or, locally, 703–605–6000.

You may also electronically access NUREG—series publications and other NRC records at NRC's Public Electronic Reading Room at *www.nrc.gov/NRC/ADAMS/index.html.*

This publication is also posted at NRC's Web site address *www.nrc.gov/NRC/NUREGS/indexnum.html.*

FOR FURTHER INFORMATION CONTACT: David J. Wrona, Division of Licensing Project Management, Office of Nuclear Reactor Regulation, Washington, DC 20555–0001 (telephone 301–415–1924).

SUPPLEMENTARY INFORMATION: Nuclear power reactor licensees are required, per 10 CFR 50.75, to adjust annually the estimated decommissioning costs of their nuclear facilities in order to ensure adequate funds are available for decommissioning. The regulation references NUREG–1307 as the appropriate source for obtaining the adjustment factor for waste burial/disposition costs; this Revision 9 of NUREG–1307 provides the current waste burial costs at the Washington and South Carolina disposal sites. In addition, this revision provides costs for low-level radioactive waste disposition using waste vendors. Licensees can factor these numbers into the adjustment formula, as specified in 10 CFR 50.75(c)(2), to determine the minimum decommissioning fund requirement for their nuclear facilities.

Dated at Rockville, Maryland, this 6th day of October 2000.

For the Nuclear Regulatory Commission.

Michael T. Masnik,

Chief, Decommissioning Section, Project Directorate IV & Decommissioning, Division of Licensing Project Management, Office of Nuclear Reactor Regulation.

[FR Doc. 00–26643 Filed 10–16–00; 8:45 am]

BILLING CODE 7590–01–M

SECURITIES AND EXCHANGE COMMISSION

(Release No. 34–43426; File No. SR–MSRB–00–08)

Self-Regulatory (Organizations; Municipal Securities Rulemaking Board; Order Approving Proposed Rule Change Relating to Reports of Sales and Purchases, Pursuant to Rule G–14

October 10, 2000.

I. Introduction

On June 15, 2000, the Municipal Securities Rulemaking Board (''MSRB'' or ''Board'') submitted to the Securities and Exchange Commission (''SEC'' or ''Commission'') pursuant to Section 19(b)(1) of the Securities Exchange Act of 1934 (''Act''),[1] and Rule 19b–4 thereunder,[2] a proposed rule change relating to reports of sales and purchases, pursuant to MSRB Rule G–14. The proposed rule change was published for comment in the **Federal Register** on July 27, 2000.[3] The Commission received one comment letter on the proposal.[4] This order approves the Board's proposal.

II. Description of the Proposal

a. Introduction

According to the Board, one of its long-standing policies is to increase price transparency in the municipal

[1] 15 U.S.C. 78s(b)(1).

[2] 17 CFR 240.19b–4.

[3] *See* Securities Exchange Act Release No. 43060 (July 23, 2000), 65 FR 46188.

[4] *See* letter from Lynette K. Hotchkiss, Vice President and Associate General Counsel, The Bond Market Association, to Jonathan G. Katz, Secretary, SEC, dated August 11, 2000.

securities market. Since 1995, the Board has expanded the scope of public transparency in several steps.[5] Each step has provided industry participants and the public successively more information about the market.

The Board's reports currently provide information about ''frequently traded'' municipal securities. ''Frequently traded'' municipal securities are those municipal securities that trade four or more times on a given business day. The existing reports are produced daily on a T + 1 basis, *i.e.*, with information for trades effected during the proceeding day.

In designing the first T + 1 transparency report and subsequent enhanced versions, the Board adopted the threshold of four trades a day because of its concern that an isolated transaction may not necessarily provide a reliable indicator of ''market price''and might be misleading to an observer not familiar with the market. At the same time, the Board committed to review the use of these reports and eventually to move to a more contemporaneous and comprehensive price transparency report.[6]

b. Proposed Report

The Board is now proposing to make publicly available a Comprehensive Transaction Report that would include information on all individual municipal securities transactions. For each trade, the proposed Report would show the trade date, the CUSIP number of the issue traded, a short description of the issue, the par value traded, the time of the trade report by the dealer, the price of the transaction, and the reported yield of transaction, if any. Each transaction would be categorized as a sale by a dealer to a customer, a purchase from a customer, or an inter-dealer trade.

In addition to information on infrequently traded issues, the proposed Report would provide information on two other types of trades not in the current Daily Transaction Reports: trades reported late (after trade date), and corrected trades (trades reported incorrectly on trade date that subsequently are corrected by the dealer.[7]

The proposed Comprehensive Transaction Report would be made available once a month to subscribers. The Board would send subscribers each month a compact disk containing all trades effected during the previous calender month. The Board plans to make sample disks with a single month's data available to prospective users without charge, so that they may determine whether they wish to subscribe.

The Board is proposing to establish a fee of $2,000 for an annual subscription. According to the Board, the proposed fee is structured to defray the Board's cost for production of 12 monthly data sets, transcription to compact disks, mailing, and subscription maintenance.

III. Summary of Comment Letters

The Commission received one comment letter regarding the proposed rule change.[8] The following summarizes the issues raised in the comment letter and the MSRB's response.[9]

The commenter generally supported the Board's goal of providing comprehensive and contemporaneous transaction reports but provided several suggestions that it believed would increase the utility of the proposed Comprehensive Transaction Report. First, the commenter suggested that the Board release transaction data for trades that occur 30 days prior on a daily basis rather than a cumulative monthly basis at the end of the following month. The commenter noted that the proposed dissemination system could result in data that was 60 days old by the time of dissemination, limiting the usefulness of the data. Second, the commenter suggested that the Board make the data available over the Internet on secure, password protected sites, rather that solely in compact disk format. The commenter believes that an Internet delivery system would be more easily downloaded and used by subscribers and would reduce the cost of the service. Finally, the commenter sought confirmation that the annual subscription fee charged for the service was directly related to the actual cost of disseminating the data to ensure that the service would not become a profit center for the Board.

In response, the Board noted that releasing data on a monthly basis is currently the most cost-effective and technologically efficient method. The Board recognizes that some data will be over a month old at the time of its release but noted that it is evaluating the means to release the data more contemporaneously in the future. With respect to the commenter's suggestion that the Board make the historical transaction data available via the Internet, the Board noted that to do so would require an extremely large file that would take a prohibitively long time to download. The Board stated that providing the historical data via the Internet also would create technical and technical-support issues for the Board. The Board noted, however, that it would continue to consider alternative delivery methods in the future.

Finally, in response to the commenter's request for confirmation regarding the subscription fees proposed to be charged for the historical data, the Board stated that the subscription fees will not be so high as to create a profit center for the Board, nor so low that the service would require a subsidy from dealer assessments. The Board reiterated that it is attempting to defray the approximate cost of disseminating the data and of establishing and maintaining subscriber accounts.

IV. Discussion

The Commission finds that the proposed rule change is consistent with the requirements of the Act and the rules and regulations thereunder applicable to the Board.[10] In particular, the Commission believes the proposed rule change is consistent with Section 15B(b)(2)(C) of the Act,[11] which requires, among other things, that the rules of the Board be designed to prevent fraudulent and manipulative acts and practices, to promote just and equitable principles of trade, to foster cooperation with persons engaged in

[5] The Board began distributing a report summarizing prices for issues that are frequently traded on the inter-dealer market in 1995; in 1998, dealer-customer prices were added in a second summary report; and in January 2000, a report with details of trades in frequently traded issues was added. *See* Securities Exchange Act Release No. 42241 (December 16, 1999), 64 FR 72123 (December 23, 1999). The proposed rule change would not affect the summary and detailed public reports of frequently traded issues.

[6] *See, e.g.,* ''Board to Proceed with Pilot Program to Disseminate Inter-Dealer Transaction Information,'' *MSRB Reports,* Vol. 14, No. 1 (January 1994). In its approval order for the Inter-Dealer Daily Report, the SEC noted that the Board, in proceeding to subsequent levels of transparency, ''should continue to work toward publicly disseminating the maximum level of useful information to the public while ensuring that the information and manner in which it is presented is not misleading.'' *See* Securities Exchange Act Release No. 34955 (November 9, 1994), 59 FR 59810 (November 18, 1994).

[7] To enable the Board to compile a comprehensive trade database for enforcement purposes, dealers report certain data after trade date. These data are not available to the Board in time to be included in the T + 1 daily reports. The post-T data also include ''corrections'' to trades that were initially reported inaccurately with regard to price, par, etc. Corrected and late trades in frequently traded issues amount to about 6 percent of the number of trades included in the current T + 1 daily reports.

[8] *See supra* note 4.

[9] *See* letter from Larry Lawrence, Policy and Technical Advisor, MSRB, to Kelly Riley, Division of Market Regulation, SEC, dated September 1, 2000.

[10] In approving this rule, the Commission has considered the proposed rule's impact on efficiency, competition, and capital formation. 15 U.S.C. 78c(f).

[11] 15 U.S.C. 78o–4(b)(2)(C).

regulating, clearing, settling, processing information with respect to and facilitating transactions in municipal securities, to remove impediments to and perfect the mechanism of a free and open market in municipal securities, and, in general, to protect investors and the public interest.

The Commission finds that the proposed Comprehensive Transaction Report is consistent with the Act because it will enhance transparency in the municipal securities market. The proposed Report will provide municipal securities participants with more transaction information about issues currently being traded. In particular, the MSRB represents that participants will now have access to three times as many transactions as are included in the current T + 1 daily reports. According to the MSRB, on average, 29,000 transactions would be reported per day. Also, the MSRB represents that the number of issues reported would increase from about 1,600 on a typical day to about 14,000.[12] Furthermore, the proposed Report expands the current T + 1 reports by also including trades reported late and corrected trades. Thus, this detailed Report will allow municipal securities market participants to monitor and analyze individual trades in infrequently traded securities, which should better assist them in making informed investment decisions.

The proposed Report should also enhance the price discovery process by providing a more complete picture of the municipal securities market. The proposed Report will contain detailed price information regarding frequently traded issues as well as detailed price information regarding infrequently traded municipal securities, *i.e.*, those traded once, twice, or three times in a given day.

The Commission commends the MSRB's efforts to increase municipal market transparency by looking for means to update its reporting programs and systems. The Commission, however, believes that the MSRB should continue to work towards including more information on infrequently traded issues on a T + 1 basis, by shortening the delay for publication of the Comprehensive Transaction Report, or by other collection and dissemination methods. The Commission supports the MSRB's goal to ultimately provide comprehensive and contemporaneous transaction reports to the market.

The Commission is satisfied with the Board's response to the comment letter. While the comment letter provided valid and helpful suggestions, the Board stated that it could not undertake the changes relating to the delivery method and the timing of delivery of the historical data at this time due to technology and cost constraints. The Board did commit, however, to consider the suggestions in the future once the service becomes operative and the Board has more experience with the needs of subscribers. The Commission believes that it would not be in the public interest to postpone the dissemination of the historical data as proposed until the delivery method and time of delivery could be modified to satisfy the commenter's suggestions. Finally, the Commission believes that the Board's statement that the subscription fees will neither generate profits for the Board nor create the need for dealers to subsidize its operations is consistent with the requirements of Section 15B(b)(2)(C) of the Act.[13]

In conclusion, the Commission finds that the proposed rule change is consistent with the Act because it provides municipal securities market participants with more detailed market data upon which they will be able to make more informed investment decisions. Thus, the proposed rule change should enhance the transparency of the municipal securities market.

V. Conclusion

It is therefore ordered, pursuant to Section 19(b)(2) of the Act,[14] that the proposed rule change (SR–MSRB–00–08) is hereby approved.

By the Commission, for the Division of Market Regulation, pursuant to delegated authority.[15]

Margaret H. McFarland,

Deputy Secretary.

[FR Doc. 00–26545 Filed 10–16–00; 8:45 am]

BILLING CODE 8010–01–M

[12] These trade volume statistics are based on February 2000 market activity.

[13] 15 U.S.C. o–4(b)(2)(C).

[14] 15 U.S.C. 78s(b)(2).

[15] 17 CFR 200.30–3(a)(12).

STATE JUSTICE INSTITUTE

Notice of Public Meeting

DATE: Friday, November 10, 2000, 9 a.m.–5 p.m.

PLACE: La Costa Hotel, Carlsbad, CA.

MATTERS TO BE CONSIDERED: Consideration of proposals submitted for Institute funding and internal Institute business.

PORTIONS OPEN TO THE PUBLIC: Consideration of proposals submitted for Institute funding.

PORTIONS CLOSED TO THE PUBLIC: Discussion of internal personnel matters.

CONTACT PERSON: David Tevelin, Executive Director, State Justice Institute, 1650 King Street, Suite 600, Alexandria, VA 22314, (703) 684–6100.

David I. Tevelin,

Executive Director.

[FR Doc. 00–26735 Filed 10–13–00; 2:48 pm]

BILLING CODE 6820–SC–M

DEPARTMENT OF TRANSPORTATION

Federal Highway Administration

Environmental Impact Statement; City of Missoula, Montana

AGENCY: Federal Highway Administration (FHWA), DOT.

ACTION: Notice of intent.

SUMMARY: The FHWA hereby gives notice that it intends to prepare an Environmental Impact Statement (EIS) for an urban corridor (involving Russell Street and South 3rd Street) all within the limits of the City of Missoula, Missoula County, Montana. The study will evaluate possible improvements to these existing roadways and all practical alignment alternatives.

FOR FURTHER INFORMATION CONTACT: Mr. Dale Paulson, Program Development Engineer, Federal Highway Administration, 2880 Skyway Drive, Helena, Montana 59602; Telephone: (406) 449–5303 ext. 239; Mr. Joel M. Marshik, Manager, Environmental Services, Montana Department of Transportation, 2701 Prospect Avenue, Helena, Montana 59602; Telephone: (406) 444–7632; or Mr. Joe Oliphant, Project Development Coordinator, City of Missoula, 435 Ryman Street, Missoula, Montana 59802–4207, Telephone: (406) 523–2877.

SUPPLEMENTARY INFORMATION:

Electronic Access

An electronic copy of this document may be downloaded using a modem and suitable communications software from the Government Printing Office's Electronic Bulletin Board Service at (202) 512–1661. Internet users may reach the Office of the Federal Register's home page at http://www.nara.gov/fedreg/ and the Government Printing Office's database at http://www.access.gpo.gov.

Background

The FHWA, in cooperation with the Montana Department of Transportation (MDT) and the City of Missoula, will

prepare an EIS in response to the need for upgrading sections of two urban arterials (Russell Street and South 3rd Street) all within the limits of the City of Missoula, Missoula County, Montana. The Russell Street section begins at the intersection of Mount Avenue, and extends approximately 2.44 km (1.52 mi) northerly to the intersection of West Broadway Street. The South 3rd Street section begins at its intersection with Reserve Street and continues easterly for a distance of approximately 1.60 km (1.0 mi) until it intersects with Russell Street.

The project is needed to meet current and future demand of motorized vehicles, bicycles, pedestrians, and to improve safety. Alternatives are expected to include taking no action; widening of Russell Street; and widening of South 3rd Street. Other alternatives may become evident as a result of public and agency input during the scoping process. All build alternatives will include improvements to non-motorized facilities and will consider a range of transportation system management (TSM) and transportation demand management (TDM) measures. Possible configurations of the Russell Street bridge across the Clark Fork River, will also be considered in the study.

The EIS will examine the short and long-term impacts on the natural and built environment. The impact assessment will include (but not be limited to): Impacts on the social environment; changes in land use; aesthetics; changes in traffic; economic consequences; air, noise and water quality, wildlife, and fisheries. In addition, environmental justice aspects will be addressed as part of the impact assessment. The EIS will also examine measures to mitigate significant adverse impacts resulting from the proposed action.

Comments are being solicited from Federal, State, and local agencies, Tribes and from private organizations and citizens who have interest in this proposal. Public information meetings, feedback sessions, and other outreach efforts will be conducted to discuss the potential alignments.

The draft EIS will be available for public and agency review, and a public hearing will be held to receive comments. Public notice will be given of the time and place of all meetings and hearings. Comments and/or suggestions from all interested parties are requested, to ensure that the full range of all issues, and significant social and environmental issues in particular, are identified and reviewed. Comments or questions concerning this proposed action and/or its EIS should be directed to the FHWA, MDT or the City of Missoula at the addresses listed previously.

Authority: 23 U.S.C. 315; 49 CFR 1.48.

Issued on: October 11, 2000.

Dale W. Paulson,

Program Development Engineer, Federal Highway Administration.

[FR Doc. 00–26563 Filed 10–16–00; 8:45 am]

BILLING CODE 4910–22–P

DEPARTMENT OF TRANSPORTATION

Research and Special Programs Administration

[Docket No. RSPA–00–7906 (PDA–27(R))]

Application by ATOFINA Chemicals, Inc. for a Preemption Determination as to Louisiana Requirements for Hazardous Materials Incident Notification

AGENCY: Research and Special Programs Administration (RSPA), DOT.

ACTION: Public notice and invitation to comment.

SUMMARY: Interested parties are invited to submit comments on an application by ATOFINA Chemicals, Inc. (ATOFINA) for an administrative determination whether Federal hazardous material transportation law preempts certain Louisiana requirements concerning hazardous materials incident notification and reporting.

DATES: Comments received on or before December 1, 2000, and rebuttal comments received on or before January 16, 2001, will be considered before an administrative ruling is issued by RSPA's Associate Administrator for Hazardous Materials Safety. Rebuttal comments may discuss only those issues raised in comments received during the initial comment period and may not discuss new issues.

ADDRESSES: The application and all comments received may be reviewed in the Dockets Office, U.S. Department of Transportation, Room PL–401, 400 Seventh Street, SW., Washington, DC 20590–0001. The application and all comments are also available on-line through the home page of DOT's Docket Management System, at ''http://dms.dot.gov.''

Comments must refer to Docket No. RSPA–00–7906 and may be submitted to the Dockets Office either in writing or electronically. Send three copies of each written comment to the Dockets Office at the above address. If you wish to receive confirmation of receipt of your comments, include a self-addressed, stamped postcard. To submit comments electronically, log onto the Docket Management System website at ''http://dms.dot.gov'' and click on ''Help & Information'' to obtain instructions.

A copy of each comment must also be sent to (1) Ms. Karen P. Flynn, Associate General Counsel, ATOFINA Chemicals, Inc., 2000 Market Street, Philadelphia, PA 19103–3222, and (2) Mr. Paul Schexnayder (Attorney 3), State of Louisiana, Department of Public Safety and Corrections, Office of Legal Affairs, P.O. Box 66614, Baton Rouge, LA 70896–6614. A certification that a copy has been sent to these persons must also be included with the comment. (The following format is suggested: ''I certify that copies of this comment have been sent to Ms. Flynn and Mr. Schexnayder at the addresses specified in the **Federal Register**.'')

A list and subject matter index of hazardous materials preemption cases, including all inconsistency rulings and preemption determinations issued, are available through the home page of RSPA's Office of the Chief Counsel, at ''http://rspa-atty.dot.gov.'' You may obtain a paper copy of this list and index by contacting Donna O'Berry by mail or telephone as provided below under the heading ''For Further Information Contact.''

FOR FURTHER INFORMATION CONTACT: Donna L. O'Berry, Office of the Chief Counsel, Research and Special Programs Administration, 400 Seventh Street, SW., Washington, DC 20590–0001 (Tel. No. 202–366–4400).

SUPPLEMENTARY INFORMATION:

I. Application for a Preemption Determination

ATOFINA has applied for a determination that Federal hazardous material transportation law, 49 U.S.C. 5101 *et seq.*, preempts the requirements in Title 32 section 1510 of Louisiana Revised Statutes (32:1510) applicable to the oral and written reporting of incidents, accidents and cleanups. The text of ATOFINA's application is set forth in Appendix A to this Notice. A paper copy of ATOFINA's application (which has been placed in the public docket) will be provided at no cost upon request to Ms. O'Berry, at the address and telephone number set forth in ''For Further Information Contact'' above.

In the application for preemption, ATOFINA's challenges section 32:1510, which provides, in part, that:

A. Each person involved in an incident, accident, or the cleanup of an incident or accident during the transportation, loading, unloading, or related storage in any place of

a hazardous material subject to this Chapter shall report immediately by telephone to the department if that incident, accident, or cleanup of an incident or accident involves:

(1) A fatality due to fire, explosion, or exposure to any hazardous material.

(2) The hospitalization of any person due to fire, explosion, or exposure to any hazardous material.

(3) A continuing danger to life, health, or property at the place of the incident or accident.

(4) An estimated property damage of more than ten thousand dollars.

B. A written report shall be submitted to the department on an approved form. Each report submitted shall contain the time and date of the incident or accident, a description of any injuries to persons or property, any continuing danger to life at the place of the accident or incident, the identity and classification of the material, and any other pertinent details.

C. In the case of an incident or accident involving hazardous materials which is not subject to this Chapter but which is subject to Title 49 and Title 46 of the Code of Federal Regulations, the carrier shall send a copy of the report filed with the United States Department of Transportation to the department.

ATOFINA argues that the reporting requirements in section 32:1510 are preempted because they concern ''the written notification, recording, and reporting of the unintentional release in transportation of hazardous material'' and are not substantively the same as the requirements in 49 CFR 171.15 and 171.16. Section 171.15 contains the Federal requirements for immediate notification of certain hazardous materials incidents, and § 171.16 contains the Federal requirements for submitting detailed hazardous materials incident reports to DOT. ATOFINA states that §§ 171.15 and 171.16 require the carrier to provide immediate notification of certain hazardous materials incidents, whereas Louisiana's statute is much broader and requires that each person involved in certain hazardous material incidents or accidents immediately notify the state. ATOFINA asserts that there can be many persons involved in an incident, such as a carrier or the owner of the goods, and that this ''duplicate reporting'' could be confusing to the people responding to the incident. Finally, ATOFINA contends that it is impractical to apply section 32:1510 to manufacturers and that it will be difficult for manufacturers to comply with the requirement. ATOFINA contends that manufacturers and carriers do make arrangements to ensure that the carrier has the responsibility for making the immediate notification required under Federal regulations.

ATOFINA indicates that it has received a Notice of Violation of section 32:1510 from the Louisiana State Police. ATOFINA states that it believed the carrier would make the notification since the carrier was directly involved with the incident. ATOFINA argues that to the extent Louisiana believes that immediate notification is necessary for emergency response purposes, the State's concern is satisfied by imposing the immediate notification requirement on the carrier and not on each person involved in the incident. ATOFINA asserts that it is impractical and a burden on interstate commerce to require a large national company to comply with a multitude of different reporting requirements in different jurisdictions, particularly those which impose the same duty on multiple parties.

II. Federal Preemption

Section 5125 of Title 49 U.S.C. contains the preemption provisions that are relevant to ATOFINA's application. Subsection (a) provides that—in the absence of a waiver of preemption by DOT under section 5125(e) or specific authority in another Federal law—a requirement of a State, political subdivision of a State, or Indian tribe is preempted if:

(1) Complying with a requirement of the State, political subdivision or tribe and a requirement of this chapter or a regulation issued under this chapter is not possible; or

(2) The requirement of the State, political subdivision, or Indian tribe, as applied or enforced, is an obstacle to the accomplishing and carrying out this chapter or a regulation prescribed under this chapter.

These two paragraphs reflect the ''dual compliance'' and ''obstacle'' criteria which RSPA had applied in issuing inconsistency rulings before 1990, under the original preemption provisions in the Hazardous Materials Transportation Act (HMTA). Pub. L. 93–633 112(a), 88 Stat. 2161 (1975). The dual compliance and obstacle criteria are based on U.S. Supreme Court decisions on preemption. *Hines* v. *Davidowitz,* 312 U.S. 52 (1941); *Florida Lime & Avocado Growers, Inc.* v. *Paul,* 373 U.S. 132 (1963); *Ray* v. *Atlantic Richfield, Inc.,* 435 U.S. 151 (1978).

Subsection (b)(1) of 49 U.S.C. 5125 provides that a non-Federal requirement concerning any of the following subjects, that is not ''substantively the same as'' a provision of Federal hazardous materials transportation law or a regulation prescribed under that law, is preempted unless it is authorized by another Federal law or DOT grants a waiver of preemption:

(A) The designation, description, and classification of hazardous material.

(B) The packing, repacking, handling, labeling, marking, and placarding of hazardous material.

(C) The preparation, execution, and use of shipping documents related to hazardous material and requirements related to the number, contents, and placement of those documents.

(D) The written notification, recording, and reporting of the unintentional release in transportation of hazardous material.

(E) The design, manufacturing, fabricating, marking, maintenance, reconditioning, repairing, or testing of a packaging or a container represented, marked, certified, or sold as qualified for use in transporting hazardous material.

To be ''substantively the same'' the non-Federal requirement must conform ''in every significant respect to the Federal requirement. Editorial and other similar *de minimis* changes are permitted.'' 49 CFR 107.202(d).

These preemption provisions in 49 U.S.C. 5125 carry out Congress' view that a single body of uniform Federal regulations promotes safety in the transportation of hazardous materials. In considering the HMTA, the Senate Commerce Committee ''endorse[d] the principle of preemption in order to preclude a multiplicity of State and local regulations and the potential for varying as well as conflicting regulations in the area of hazardous materials transportation.'' S. Rep. No. 1102, 93rd Cong. 2nd Sess. 37 (1974). When it amended the HMTA in 1990, Congress specifically found that:

(3) Many States and localities have enacted laws and regulations which vary from Federal laws and regulations pertaining to the transportation of hazardous materials, thereby creating the potential for unreasonable hazards in other jurisdictions and confounding shippers and carriers which attempt to comply with multiple and conflicting registration, permitting, routing, notification, and other regulatory requirements,

(4) Because of the potential risks to life, property, and the environment posed by unintentional releases of hazardous materials, consistency in laws and regulations governing the transportation of hazardous materials is necessary and desirable,

(5) In order to achieve greater uniformity and to promote the public health, welfare, and safety at all levels, Federal standards for regulating the transportation of hazardous materials in intrastate, interstate, and foreign commerce are necessary and desirable.

Pub. L. 101–615 Section 2, 104 Stat. 3244. A Federal Court of Appeals has found that uniformity was the ''linchpin'' in the design of the HMTA, including the 1990 amendments which expanded the preemption provisions. *Colorado Pub. Util. Comm'n* v. *Harmon,* 951 F.2d 1571, 1575 (10th Cir. 1991). (In 1994, Congress revised, codified and

enacted the HMTA ''without substantive change,'' at 49 U.S.C. Chapter 51. Pub. L. 103–272, 108 Stat. 745.)

III. Preemption Determinations

Under 49 U.S.C. 5125(d)(1), any directly affected person may apply to the Secretary of Transportation for a determination whether a State, political subdivision or Indian tribe requirement is preempted. The Secretary of Transportation has delegated authority to RSPA to make determinations of preemption, except for those that concern highway routing, which have been delegated to the Federal Motor Carrier Safety Administration. 49 CFR 1.53(b).

Section 5125(d)(1) requires that notice of an application for a preemption determination must be published in the **Federal Register**. Following the receipt and consideration of written comments, RSPA will publish its determination in the **Federal Register.** *See* 49 CFR 107.209(d). A short period of time is allowed for filing petitions for reconsideration. 49 CFR 107.211. Any party to the proceeding may seek judicial review in a Federal district court. 49 U.S.C. 5125(f).

Preemption determinations do not address issues of preemption arising under the Commerce Clause, the Fifth Amendment or other provisions of the Constitution or under statutes other than the Federal hazardous materials transportation law unless it is necessary to do so in order to determine whether a requirement is authorized by another Federal law. A State, local or Indian tribe requirement is not authorized by another Federal law merely because it is not preempted by another Federal statue. *Colorado Pub. Util. Comm'n* v. *Harmon,* above, 951 F2d at 1581 n.10.

In making preemption determinations under 49 U.S.C. 5125(d), RSPA is guided by the principles and policy set forth in Executive Order No. 13132, entitled ''Federalism'' (64 FR 43255, August 4, 1999). Section 4(a) of that Executive Order authorizes preemption of State laws only when a statute contains an express preemption provision, there is other clear evidence of Congress intent to preempt State law, or the exercise of State authority directly conflicts with the exercise of Federal authority. Section 5125 contains express preemption provisions, which RSPA has implemented through its regulations.

IV. Public Comment

All comments should be limited to the issue of whether 49 U.S.C. 5125 preempts the Louisiana requirements applicable to the oral and written reporting of certain hazardous materials incidents. Comments should specifically address the preemption criteria detailed in Part II, above, and set forth in detail the manner in which the Louisiana requirements are applied and enforced.

Persons intending to comment should review the standards and procedures governing consideration of applications for preemption determinations, set forth at 49 CFR 107.201–107.211.

Issued in Washington, DC, on September 29, 2000.

Robert A. McGuire,

Associate Administrator for Hazardous Materials Safety, Research and Special Programs Administration.

Appendix A

August 30, 2000

Associate Administrator for Hazardous Materials Safety, Research and Special Programs Administration, U.S. Department of Transportation, Washington, DC 20590–0001, Attn: Hazardous Materials Preemption Docket

Dear Sir or Madam: Enclosed is ATOFINA Chemicals, Inc.'s Application for Determination of Preemption. If you need additional information, please feel free to contact me.

Sincerely,

Karen P. Flynn,

Associate General Counsel.

cc: William Oister (w/ encl.)

Andrea E. Utecht, Esq., (w/o encl.)

Application for Determination of Preemption

Pursuant to 49 CFR 107.203, ATOFINA Chemicals, Inc. (formerly known as Elf Atochem North America, Inc.) is making an application for a determination that 49 CFR 171.15 and 171.16 preempt La. R. S. § 32:1510.

I. Applicable State Statute

La. R. S. § 32:1510 states as follows:

Reporting of Incidents, Accidents, and Cleanups

A. Each person involved in an incident, accident, or the cleanup of an incident or accident during the transportation, loading, unloading, or related storage in any place of a hazardous material subject to this Chapter shall report immediately by telephone to the department if that incident, accident, or cleanup of an incident or accident involves:

1. A fatality due to fire, explosion, or exposure to any hazardous material;

2. The hospitalization of any person due to fire, explosion, or exposure to any hazardous material;

3. A continuing danger to life, health, or property at the place of the incident or accident;

4. An estimated property damage of more than ten thousand dollars.

B. A written report shall be submitted to the department on an approved form. Each report submitted shall contain the time and date of the incident or accident, a description of any injuries to persons or property, any continuing danger to life at the place of the accident or incident, the identity and classification of the material, and any other pertinent details.

C. In the case of an incident or accident involving hazardous materials which is not subject to this Chapter but which is subject to Title 49 and Title 46 of the Code of Federal Regulations, the carrier shall send a copy of the report filed with the United States Department of Transportation to the department.

D. The secretary shall adopt and promulgate rules and regulations in accordance with the Administrative Procedures Act to coordinate the implementation of a Transportation emergency response system.

E. 1. Notwithstanding any other provision of law to the contrary, the provisions of this Section shall not apply to any incidents, accidents, or cleanup of incidents or accidents that occur within a facility that is subject to the release reporting requirements of R.S. 30:2373(B) and is engaged in activities defined or classified under one or more of the following subsectors, industry groups, or industries of the 1997 North American Industry Classification System (NAICS):

a. 211 (oil and gas extraction).

b. 22111 (electric power generation).

c. 3221 (pulp, paper and paperboard mills).

d. 324 (petroleum and coal products manufacturing).

e. 325 (chemical manufacturing).

f. 326 (plastics and rubber products manufacturing).

g. 331 (primary metal manufacturing).

h. 4953 (refuse systems).

i. 4212 (local trucking without storage).

j. 4789 (trucking without storage).

2. Notwithstanding the provisions of Paragraph 1 of this Subsection, this Section shall apply to any carrier involved in any incident, accident, or clean up of an incident or accident which occurs outside the perimeter of any facility exempted from this Section pursuant to Paragraph 1 of this Subsection.

3. The secretary may develop rules and regulations to implement and clarify the reporting requirements of this Subsection and to address any changes in federal law, rules, or regulations.

II. Applicable Federal Regulations

Section 171.15 of Title 49 of the Code of Federal Regulations provides as follows:

§ 171.15 IMMEDIATE NOTICE OF THE CERTAIN HAZARDOUS MATERIALS INCIDENTS.

(a) At the earliest practicable moment, each carrier who transports hazardous materials (including hazardous wastes) shall give notice in accordance with paragraph

(b) of this section after each incident that occurs during the course of transportation (including loading, unloading and temporary storage) in which—

(1) As a direct result of hazardous materials—

(i) A person is killed; or

(ii) A person received injuries requiring his or her hospitalization; or

(iii) Estimated carrier or other property damage exceeds $50,000; or

(iv) An evacuation of the general public occurs lasting one or more hours; or

(v) One or more major transportation arteries or facilities are closed or shut down for one hour or more; or

(vi) The operational flight pattern or routine of an aircraft is altered; or

(2) Fire, breakage, spillage, or suspected radioactive contamination occurs involving shipment of radioactive material (see also §§ 174.45, 176.48, and 177.807 of this subchapter); or

(3) Fire, breakage, spillage, or suspected contamination occurs involving shipment of infectious substances (etiologic agents); or

(4) There has been a release of a marine pollutant in a quantity exceeding 450 L (119 gallons) for liquids or 400 kg (882 pounds) for solids; or

(5) A situation exists of such a nature (*e.g.,* a continuing danger to life exists at the scene of the incident) that, in the judgment of the carrier, it should be reported to the Department even though it does not meet the criteria of paragraph (a) (1), (2) or (3) of this section.

(b) Except for transportation by aircraft, each notice required by paragraph (a) of this section shall be given to the Department by telephone (toll-free) on 800–424–8802. Notice involving shipments transported by aircraft must be given to the nearest FAA Civil Aviation Security Office by telephone at the earliest practical moment after each incident in place of the notice to the Department. Notice involving etiologic agents may be given to the Director, Centers for Disease Control, U. S. Public Health Service, Atlanta, GA (800) 232–0124, in place of the notice to the Department or (toll call) on 202–267–2675. Each notice must include the following information:

(1) Name of reporter;

(2) Name and address of carrier represented by reporter;

(3) Phone number where reporter can be contacted;

(4) Date, time, and location of incident;

(5) The extent of injuries, if any;

(6) Classification, name, and quantity of hazardous materials involved, if such information is available;

(7) Type of incident and nature of hazardous material involvement and whether a continuing danger to life exists at the scene.

(c) Each carrier making a report under this section shall also make the report required by § 171.16.

Section 171.16 of Title 49 of the Code of Federal Regulations provides as follows:

§ 171.16 DETAILED HAZARDOUS MATERIALS INCIDENT REPORTS.

(a) Each carrier who transports hazardous materials shall report in writing, in duplicate, on DOT Form F 5800.1 (Rev. 6/89) to the Department within 30 days of the date of discovery, each incident that occurs during the course of transportation (including loading, unloading, and temporary storage) in which any of the circumstances set forth in 171.15(a) occurs or there has been an unintentional release of hazardous materials from a package (including a tank) or any quantity of hazardous waste has been discharged during transportation. If a report pertains to a hazardous waste discharge:

(1) A copy of the hazardous waste manifest for the waste must be attached to the report; and

(2) An estimate of the quantity of the waste removed from the scene, the name and address of the facility to which it was taken, and the manner of disposition of any removed waste must be entered in Section IX of the report form (Form F 5800.1) (Rev. 6/89).

(b) Each carrier making a report under this section shall send the report to the Information Systems Manager, DHM–63, Research and Special Programs Administration, Department of Transportation, Washington, DC 20590–0001; and, for incidents involving transportation by aircraft, a copy of the report shall also be sent to the FAA Civil Aviation Security Office nearest the location of the incident. A copy of the report shall be retained for a period of two years, at the carrier's principal place of business, or at other places as authorized and approved in writing by an agency of the Department of Transportation.

(c) Except as provided in paragraph (d) of this section, the requirements of paragraph (a) of this section do not apply to incidents involving the unintentional release of a hazardous material—

(1) Transported under one of the following proper shipping names:

i. Consumer commodity;

ii. Battery, electric storage, wet, filled with acid or alkali;

iii. Paint and paint related material when shipped in packaging of five gallons or less.

(2) Prepared and transported as a limited quantity shipment in accordance with this subchapter .

(d) The exceptions to incident reporting provided in paragraph (c) of this section do not apply to:

(1) Incidents required to be reported under § 171.15(a);

(2) Incidents involving transportation aboard aircraft;

(3) Except for consumer commodities, materials in Packing Group I; or

(4) Incidents involving the transportation of hazardous waste.

III. Basis for Preemption

Subsection (b)(1) of 49 U.S.C. 5125 provides that a non-federal requirement concerning ''(D) the written notification, recording, and reporting of the unintentional release in transportation of hazardous material'' is preempted if ''it is not substantively the same as'' a provision of federal transportation law or a regulation prescribed under that law. La. R. S. § 32:1510 is a non-federal requirement relating to the written notification and reporting of an unintentional release in transportation of hazardous materials that is not ''substantively the same as'' the federal regulations.

The federal regulations in 49 CFR 171.15 and 171.16 clearly require ''the carrier'' to fulfill the immediate reporting requirements for hazardous material accidents. The Louisiana statute is much broader and requires that ''each person involved in an incident'' make an immediate report to the state police. There can be many persons involved in an incident, such as the carrier, the owner of the goods, or agents of each of them. Thus, the Louisiana statute requires duplicate reporting which could be confusing to those who may have to respond to the incident. From the standpoint of the manufacturer of the goods, it is an impractical regulation and will be difficult to achieve compliance. Arrangements are made between the manufacturer and the carrier to make sure that the carrier has the responsibility to make the immediate notification required under the federal regulations. The Louisiana requirement is much broader than the applicable federal requirement. Thus, La. R.S. § 32:1510 does not ''conform in every significant respect to the Federal requirement,'' 49 CFR 107.202(d). As such, it is not substantively the same and should be preempted.

ATOFINA Chemicals, Inc. requests this preemption determination because it received a Notice of Violation from the Louisiana State Police identifying a violation of La. R. S. § 32:1510. For the incident in question, ATOFINA believed that the carrier would make any necessary notification since it was directly present on the scene. Thus, to the extent that Louisiana believes that immediate notification is necessary for emergency response purposes, that concern is satisfied by imposing the immediate notification obligation on the carrier rather than on each person involved in the incident, some of whom may not be present at the scene and who would be making a notification based on second hand information received from those at the scene. It would be impractical and a burden on interstate commerce to require a large national company to comply with a multitude of different reporting requirements in the different state jurisdictions, particularly those like Louisiana's which impose the same duty on multiple parties. Procedures would become so cumbersome that ultimately they would not be useful at all. Therefore, ATOFINA Chemicals, Inc. requests that a determination be made that La. R. S. § 32:1510 is preempted by 49 CFR 171.15 and 171.16.

[FR Doc. 00–25589 Filed 10–16–00; 8:45 am]

BILLING CODE 4910–60–P

DEPARTMENT OF TRANSPORTATION

Surface Transportation Board

[STB Finance Docket No. 33931]

Massachusetts Central Railroad Corporation—Acquisition and Operation Exemption—New York Central Lines LLC and CSX Transportation, Inc.

Massachusetts Central Railroad Corporation (MCER), a Class III railroad, has filed a notice of exemption under 49 CFR 1150.41 to acquire from New York Central Lines LLC and CSX Transportation, Inc. (collectively CSX) and operate approximately 1.4 miles ±

of line from milepost QBR 0.205 to milepost QBR 1.605, in Palmer, MA.[1]

The earliest the transaction could be consummated was October 6, 2000, the effective date of the exemption (7 days after the exemption was filed). Counsel for MCER has been contacted by telephone and has acknowledged that the transaction could not be consummated until October 6, 2000.

If the verified notice contains false or misleading information, the exemption is void *ab initio.* Petitions to revoke the exemption under 49 U.S.C. 10502(d) may be filed at any time. The filing of a petition to revoke does not automatically stay the transaction.

An original and 10 copies of all pleadings, referring to STB Finance Docket No. 33931, must be filed with the Surface Transportation Board, Office of the Secretary, Case Control Unit, 1925 K Street, NW., Washington, DC 20423–0001. In addition, one copy of each pleading must be served on James E. Howard, Esq., One Thompson Square, Suite 201, Charlestown, MA 02129.

Board decisions and notices are available on our website at ''WWW.STB.DOT.GOV.''

Decided: October 10, 2000.

By the Board, David M. Konschnik, Director, Office of Proceedings.

Vernon A. Williams,

Secretary.

[FR Doc. 00–26653 Filed 10–16–00; 8:45 am]

BILLING CODE 4915–00–P

[1] MCER states that it currently leases the line from CSX and operates it.

DEPARTMENT OF THE TREASURY

Bureau of Alcohol, Tobacco and Firearms

Proposed Collection; Comment Request

ACTION: Notice and request for comments.

SUMMARY: The Department of the Treasury, as part of its continuing effort to reduce paperwork and respondent burden, invites the general public and other Federal agencies to take this opportunity to comment on proposed and/or continuing information collections, as required by the Paperwork Reduction Act of 1995, Public Law 104–13 (44 U.S.C. 3506(c)(2)(A)). Currently, the Bureau of Alcohol, Tobacco and Firearms within the Department of the Treasury is soliciting comments concerning the Letterhead Applications and Notices Filed by Brewers.

DATES: Written comments should be received on or before December 18, 2000.

ADDRESSES: Direct all written comments to Bureau of Alcohol, Tobacco and Firearms, Linda Barnes, 650 Massachusetts Avenue, NW., Washington, DC 20226, (202) 927–8930.

FOR FURTHER INFORMATION CONTACT: Requests for additional information or copies of the form(s) and instructions should be directed to William H. Foster, Regulations Division, 650 Massachusetts Avenue, NW., Washington, DC 20226, (202) 927–8374.

SUPPLEMENTARY INFORMATION:

Title: Letterhead Applications and Notices Filed by Brewers.

OMB Number: 1512–0045.

Form Number: ATF F 5130.10.

Recordkeeping Requirement ID Number: ATF REC 5130/2.

Abstract: The Internal Revenue Code requires brewers to file a notice of intent to operate a brewery. ATF F 5130.10 is similar to a permit and, when approved by ATF, is a brewer's authorization to operate. Letterhead applications and notices are necessary to identify brewery activities so that ATF may insure that proposed operations do not jeopardize Federal revenues. Brewers must keep general required records for ongoing brewery operations for a period of 3 years. However, the brewer must keep certain documents for an indefinite period. Qualifying documents are the permission to operate. So, as long as the brewery is in operation, the brewer must keep the pertinent qualifying documents, including the Brewer's Notice and other notices and applications.

Current Actions: The form has been rewritten in plain language style which makes it more easily understood. Also, the revised form has combined many letterhead instructions and attachments where previously the brewer would have to generate the attachments for the application. The number of breweries has increased substantially but the burden to complete the form has been reduced by 1 hour.

Type of Review: Extension with changes.

Affected Public: Business or other for-profit.

Estimated Number of Respondents: 1,750.

Estimated Time Per Respondent: 3 hours for the form and 30 minutes for notices and applications.

Estimated Total Annual Burden Hours: 9,625.

Request for Comments

Comments submitted in response to this notice will be summarized and/or included in the request for OMB approval. All comments will become a matter of public record. Comments are invited on: (a) Whether the collection of information is necessary for the proper performance of the functions of the agency, including whether the information shall have practical utility; (b) the accuracy of the agency's estimate of the burden of the collection of information; (c) ways to enhance the quality, utility, and clarity of the information to be collected; (d) ways to minimize the burden of the collection of information on respondents, including through the use of automated collection techniques or other forms of information technology; and (e) estimates of capital or start-up costs and costs of operation, maintenance, and purchase of services to provide information.

Dated: October 10, 2000.

William T. Earle,

Assistant Director (Management) CFO.

[FR Doc. 00–26624 Filed 10–16–00; 8:45 am]

BILLING CODE 4810–31–P

DEPARTMENT OF THE TREASURY

Bureau of Alcohol, Tobacco and Firearms

Proposed Collection; Comment Request

ACTION: Notice and request for comments.

SUMMARY: The Department of the Treasury, as part of its continuing effort to reduce paperwork and respondent burden, invites the general public and other Federal agencies to take this opportunity to comment on proposed and/or continuing information collections, as required by the Paperwork Reduction Act of 1995, Public Law 104–13 (44 U.S.C. 3506(c)(2)(A)). Currently, the Bureau of Alcohol, Tobacco and Firearms within the Department of the Treasury is soliciting comments concerning the Firearms Transaction Record, Part II Non-Over-The-Counter.

DATES: Written comments should be received on or before December 18, 2000.

ADDRESSES: Direct all written comments to Bureau of Alcohol, Tobacco and Firearms, Linda Barnes, 650 Massachusetts Avenue, NW., Washington, DC 20226, (202) 927–8930.

FOR FURTHER INFORMATION CONTACT: Requests for additional information or copies of the form(s) and instructions should be directed to Gary Thomas, Chief, Firearms Programs Division, 650

Massachusetts Avenue, NW., Washington, DC 20226, (202) 927–7770.

SUPPLEMENTARY INFORMATION:

Title: Firearms Transaction Record, Part II Non-Over-The-Counter.

OMB Number: 1512–0130.

Form Number: ATF F 4473 (5300.9) Part II.

Abstract: ATF F 4473 (5300.9) Part II is used to determine the eligibility under the Gun Control Act (GCA) of a person to receive a firearm from a Federal firearms licensee. It is also used to establish the identity of the buyer. The form is also used in law enforcement in investigations/inspections to trace firearms or to confirm criminal activity of persons violating the GCA. The record retention requirement for this information collection is 20 years.

Current Actions: There are no changes to this information collection and it is being submitted for extension purposes only.

Type of Review: Extension.

Affected Public: Individuals or households.

Estimated Number of Respondents: 20,900.

Estimated Time Per Respondent: 6 minutes.

Estimated Total Annual Burden Hours: 9,057.

Request for Comments

Comments submitted in response to this notice will be summarized and/or included in the request for OMB approval. All comments will become a matter of public record. Comments are invited on: (a) Whether the collection of information is necessary for the proper performance of the functions of the agency, including whether the information shall have practical utility; (b) the accuracy of the agency's estimate of the burden of the collection of information; (c) ways to enhance the quality, utility, and clarity of the information to be collected; (d) ways to minimize the burden of the collection of information on respondents, including through the use of automated collection techniques or other forms of information technology; and (e) estimates of capital or start-up costs and costs of operation, maintenance, and purchase of services to provide information.

Dated: October 10, 2000.

William T. Earle,

Assistant Director (Management) CFO.

[FR Doc. 00–26625 Filed 10–16–00; 8:45 am]

BILLING CODE 4810–31–P

DEPARTMENT OF THE TREASURY

Bureau of Alcohol, Tobacco and Firearms

Proposed Collection; Comment Request

ACTION: Notice and request for comments.

SUMMARY: The Department of the Treasury, as part of its continuing effort to reduce paperwork and respondent burden, invites the general public and other Federal agencies to take this opportunity to comment on proposed and/or continuing information collections, as required by the Paperwork Reduction Act of 1995, Public Law 104–13 (44 U.S.C. 3506(c)(2)(A)). Currently, the Bureau of Alcohol, Tobacco and Firearms within the Department of the Treasury is soliciting comments concerning the Licensed Firearms Records of Acquisition, Disposition and Supporting Data.

DATES: Written comments should be received on or before December 18, 2000.

ADDRESSES: Direct all written comments to Bureau of Alcohol, Tobacco and Firearms, Linda Barnes, 650 Massachusetts Avenue, NW., Washington, DC 20226, (202) 927–8310.

FOR FURTHER INFORMATION CONTACT: Requests for additional information or copies of the form(s) and instructions should be directed to Gary Thomas, Chief, Firearms Programs Division, 650 Massachusetts Avenue, NW., Washington, DC 20226, (202) 927–7770.

SUPPLEMENTARY INFORMATION:

Title: Licensed Firearms Dealers Records of Acquisition, Disposition and Supporting Data.

OMB Number: 1512–0490.

Form Number: ATF F 4473 (5300.24) Part I(LV), Firearms Transaction Record Part I Low Volume, Over-the-Counter and ATF F 4473 (5300.25) Part II(LV), Firearms Transaction Record Part II Low Volume, Intra-State Non-Over-the-Counter.

Recordkeeping Requirement ID Number: ATF REC 7570/2.

Abstract: These records furnish specific information indispensable to ATF's mission to enforce the firearms laws and regulations. The low volume forms are used only by Federal firearms licensees disposing of 50 or fewer firearms per 12-month period. They are kept at the licensee's option, in lieu of ATF F 4473 and records of acquisition and disposition. The record retention requirement for this information collection is 20 years.

Current Actions: There are no changes to this information collection and it is being submitted for extension purposes only.

Type of Review: Extension.

Affected Public: Business or other for-profit, individuals or households.

Estimated Number of Respondents: 5,000.

Estimated Time Per Respondent: 6 minutes.

Estimated Total Annual Burden Hours: 1,042.

Request for Comments

Comments submitted in response to this notice will be summarized and/or included in the request for OMB approval. All comments will become a matter of public record. Comments are invited on: (a) Whether the collection of information is necessary for the proper performance of the functions of the agency, including whether the information shall have practical utility; (b) the accuracy of the agency's estimate of the burden of the collection of information; (c) ways to enhance the quality, utility, and clarity of the information to be collected; (d) ways to minimize the burden of the collection of information on respondents, including through the use of automated collection techniques or other forms of information technology; and (e) estimates of capital or start-up costs and costs of operation, maintenance, and purchase of service to provide information.

Dated: October 10, 2000.

William T. Earle,

Assistant Director (Management) CFO.

[FR Doc. 00–26626 Filed 10–16–00; 8:45 am]

BILLING CODE 4810–31–P

DEPARTMENT OF THE TREASURY

Bureau of Alcohol, Tobacco and Firearms

Proposed Collection; Comment Request

ACTION: Notice and request for comments.

SUMMARY: The Department of the Treasury, as part of its continuing effort to reduce paperwork and respondent burden, invites the general public and other Federal agencies to take this opportunity to comment on proposed and/or continuing information collections, as required by the Paperwork Reduction Act of 1995, Public Law 104–13 (44 U.S.C. 3506(c)(2)(A)). Currently, the Bureau of Alcohol, Tobacco and Firearms within the Department of the Treasury is

soliciting comments concerning the Bond-Export Warehouse Proprietor, Export Bond-Customs Bonded Cigar Manufacturing Warehouse, Extension of Coverage of Bond, Bond Under 26 U.S.C. 6423, Bond-Manufacturer of Tobacco Products.

DATES: Written comments should be received on or before December 18, 2000.

ADDRESSES: Direct all written comments to Bureau of Alcohol, Tobacco and Firearms, Linda Barnes, 650 Massachusetts Avenue, NW., Washington, DC 20226, (202) 927–8930.

FOR FURTHER INFORMATION CONTACT: Requests for additional information or copies of the form(s) and instructions should be directed to Cliff Mullen, Regulations Division, 650 Massachusetts Avenue, NW., Washington, DC 20226, (202) 927–8181.

SUPPLEMENTARY INFORMATION:

Title: Bond-Export Warehouse Proprietor, ATF F 2103 (5220.5), Export Bond-Customs Bonded Cigar Manufacturing Warehouse, ATF F 2104 (5200.15), Extension of Coverage of Bond, ATF F 2105 (5000.7), Bond Under 26 U.S.C. 6423, ATF F 2490 (5620.10), Bond-Manufacturer of Tobacco Products, ATF F 3070 (5210.13).

OMB Number: 1512–0534.

Form Number: See Titles.

Abstract: These forms provide an efficient method of collecting the required information for the excise tax on wine, and provides a statutory system of controls for securing payment of taxes properly due. The record retention requirement for this information collection is 2 years.

Current Actions: There are no changes to this information collection and it is being submitted for extension purposes only.

Type of Review: Extension.

Affected Public: Business or other for-profit.

Estimated Number of Respondents: 15.

Estimated Time Per Respondent: 1 hour and 40 minutes.

Estimated Total Annual Burden Hours: 25.

Request for Comments

Comments submitted in response to this notice will be summarized and/or included in the request for OMB approval. All comments will become a matter of public record. Comments are invited on: (a) Whether the collection of information is necessary for the proper performance of the functions of the agency, including whether the information shall have practical utility; (b) the accuracy of the agency's estimate of the burden of the collection of information; (c) ways to enhance the quality, utility, and clarity of the information to be collected; (d) ways to minimize the burden of the collection of information on respondents, including through the use of automated collection techniques or other forms of information technology; and (e) estimates of capital or start-up costs and costs of operation, maintenance, and purchase of services to provide information.

Dated: October 10, 2000.

William T. Earle,

Assistant Director (Management) CFO.

[FR Doc. 00–26627 Filed 10–17–00; 8:45 am]

BILLING CODE 4810–31–P

DEPARTMENT OF THE TREASURY

Bureau of Alcohol, Tobacco and Firearms

Proposed Collection; Comment Request

ACTION: Notice and request for comments.

SUMMARY: The Department of the Treasury, as part of its continuing effort to reduce paperwork and respondent burden, invites the general public and other Federal agencies to take this opportunity to comment on proposed and/or continuing information collections, as required by the Paperwork Reduction Act of 1995, Public Law 104–13 (44 U.S.C. 3506(c)(2)(A)). Currently, the Bureau of Alcohol, Tobacco and Firearms within the Department of the Treasury is soliciting comments concerning the Principal Place of Business on Beer Labels.

DATES: Written comments should be received on or before December 18, 2000 to be assured of consideration.

ADDRESSES: Direct all written comments to Bureau of Alcohol, Tobacco and Firearms, Linda Barnes, 650 Massachusetts Avenue, NW., Washington, DC 20226, (202) 927–8930.

FOR FURTHER INFORMATION CONTACT: Requests for additional information or copies of the form(s) and instructions should be directed to Richard Mascolo, Chief, Regulations Division, 650 Massachusetts Avenue, NW., Washington, DC 20226, (202) 927–8210.

SUPPLEMENTARY INFORMATION:

Title: Principal Place of Business on Beer Labels.

OMB Number: 1512–0474.

Recordkeeping Requirement ID Number: ATF Reporting Requirement 5130/5.

Abstract: ATF regulations require the name and address of the brewer to appear on labels of kegs, bottles, and cans of domestic beer. The regulations permit domestic brewers who operate more than one one brewery to show as their address on labels and kegs of beer, their (principal place of business) address. This label option may be used in lieu of showing the actual place of production on the label or of listing all of the brewer's locations on the label. There is no period of retention prescribed for this reporting requirement since the requirement is to provide identification of the brewer through labeling.

Current Actions: There are no changes to this information collection and it is being submitted for extension purposes only.

Type of Review: Extension.

Affected Public: Business or other for-profit.

Estimated Number of Respondents: 1,200.

Estimated Time Per Respondent: 0.

Estimated Total Annual Burden Hours: 1.

Request for Comments

Comments submitted in response to this notice will be summarized and/or included in the request for OMB approval. All comments will become a matter of public record. Comments are invited on: (a) Whether the collection of information is necessary for the proper performance of the functions of the agency, including whether the information shall have practical utility; (b) the accuracy of the agency's estimate of the burden of the collection of information; (c) ways to enhance the quality, utility, and clarity of the information to be collected; (d) ways to minimize the burden of the collection of information on respondents, including through the use of automated collection techniques or other forms of information technology; and (e) estimates of capital or start-up costs and costs of operation, maintenance, and purchase of services to provide information.

Dated: October 10, 2000.

William T. Earle,

Assistant Director (Management) CFO.

[FR Doc. 00–26628 Filed 10–16–00; 8:45 am]

BILLING CODE 4810–31–P

DEPARTMENT OF THE TREASURY

Bureau of Alcohol, Tobacco and Firearms

Proposed Collection; Comment Request

ACTION: Notice and request for comments.

SUMMARY: The Department of the Treasury, as part of its continuing effort to reduce paperwork and respondent burden, invites the general public and other Federal agencies to take this opportunity to comment on proposed and/or continuing information collections, as required by the Paperwork Reduction Act of 1995, Public Law 104–13 (44 U.S.C. 3506(c)(2)(A)). Currently, the Bureau of Alcohol, Tobacco and Firearms within the Department of the Treasury is soliciting comments concerning the Records of Acquisition and Disposition, Collectors of Firearms.

DATES: Written comments should be received on or before December 18, 2000.

ADDRESSES: Direct all written comments to Bureau of Alcohol, Tobacco and Firearms, Linda Barnes, 650 Massachusetts Avenue, NW., Washington, DC 20226, (202) 927–8930.

FOR FURTHER INFORMATION CONTACT: Requests for additional information or copies of the form(s) and instructions should be directed to Gary Thomas, Chief, Firearms Program Division, 650 Massachusetts Avenue, NW., Washington, DC 20226, (202) 927–7770.

SUPPLEMENTARY INFORMATION:

Title: Records of Acquisition and Disposition, Collectors of Firearms

Title: Records of Acquisition and Disposition, Collectors of Firearms.

OMB Number: 1512–0387.

Recordkeeping Requirement ID Number: ATF REC 7570/2 and ATF REC 7570/3.

Abstract: These records are used by ATF in criminal investigations and compliance inspections in fulfilling the Bureau's mission to enforce the gun control laws. The record retention requirement for this information collection is 20 years.

Current Actions: There are no changes to this information collection and it is being submitted for extension purposes only.

Type of Review: Extension

Affected Public: Business or other for-profit

Estimated Number of Respondents: 172,250

Estimated Time Per Respondent: 3 hours

Estimated Total Annual Burden Hours: 559,791

Request for Comments

Comments submitted in response to this notice will be summarized and/or included in the request for OMB approval. All comments will become a matter of public record. Comments are invited on: (a) Whether the collection of information is necessary for the proper performance of the functions of the agency, including whether the information shall have practical utility; (b) the accuracy of the agency's estimate of the burden of the collection of information; (c) ways to enhance the quality, utility, and clarity of the information to be collected; (d) ways to minimize the burden of the collection of information on respondents, including through the use of automated collection techniques or other forms of information technology; and (e) estimates of capital or start-up costs and costs of operation, maintenance, and purchase of services to provide information.

Dated: October 10, 2000.

William T. Earle,

Assistant Director (Management) CFO.

[FR Doc. 00–26629 Filed 10–16–00; 8:45 am]

BILLING CODE 4810–31–P

DEPARTMENT OF THE TREASURY

Bureau of Alcohol, Tobacco and Firearms

Proposed Collection; Comment Request

ACTION: Notice and request for comments.

SUMMARY: The Department of the Treasury, as part of its continuing effort to reduce paperwork and respondent burden, invites the general public and other Federal agencies to take this opportunity to comment on proposed and/or continuing information collections, as required by the Paperwork Reduction Act of 1995, Public Law 104–13 (44 U.S.C. 3506(c)(2)(A)). Currently, the Bureau of Alcohol, Tobacco and Firearms within the Department of the Treasury is soliciting comments concerning the Application for License Under 18 U.S.C. Chapter 44, Firearms.

DATES: Written comments should be received on or before December 18, 2000.

ADDRESS: Direct all written comments to Bureau of Alcohol, Tobacco and Firearms, Linda Barnes, 650 Massachusetts Avenue, NW., Washington, DC 20226, (202) 927–8930.

FOR FURTHER INFORMATION CONTACT: Requests for additional information or copies of the form(s) and instructions should be directed to Gary Thomas, Chief, Firearms Programs Division, 650 Massachusetts Avenue, NW., Washington, DC 20226, (202) 927–7770.

SUPPLEMENTARY INFORMATION: *Title:* Application for License Under 18 U.S.C. Chapter 44, Firearms

OMB Number: 1512–0042.

Form Number: ATF F 7 (5310.12).

Abstract: This form is used by the public when applying for a Federal firearms license as a dealer, importer, or manufacturer. The information requested on the form establishes eligibility for the license. There is no record retention requirement associated with this form due to the fact that there is no regulatory requirement to maintain records.

Current Actions: There are no changes to this information collection and it is being submitted for extension purposes only.

Type of Review: Extension

Affected Public: Business or other for-profit, individuals or households.

Estimated Number of Respondents: 10,000.

Estimated Time Per Respondent: 1 hour and 15 minutes.

Estimated Total Annual Burden Hours: 12,500.

Request for Comments

Comments submitted in response to this notice will be summarized and/or included in the request for OMB approval. All comments will become a matter of public record. Comments are invited on: (a) whether the collection of information is necessary for the proper performance of the functions of the agency, including whether the information shall have practical utility; (b) the accuracy of the agency's estimate of the burden of the collection of information; (c) ways to enhance the quality, utility, and clarity of the information to be collected; (d) ways to minimize the burden of the collection of information on respondents, including through the use of automated collection techniques or other forms of information technology; and (e) estimates of capital or start-up costs and costs of operation, maintenance, and purchase of services to provide information.

Dated: October 10, 2000.

William T. Earle,

Assistant Director (Management) CFO.

[FR Doc. 00–26630 Filed 10–16–00; 8:45 am]

BILLING CODE 4810–31–P

DEPARTMENT OF THE TREASURY

Bureau of Alcohol, Tobacco and Firearms

Proposed Collection; Comment Request

ACTION: Notice and request for comments.

SUMMARY: The Department of the Treasury, as part of its continuing effort to reduce paperwork and respondent burden, invites the general public and other Federal agencies to take this opportunity to comment on proposed and/or continuing information collections, as required by the Paperwork Reduction Act of 1995, Public Law 104–13 (44 U.S.C. 3506(c)(2)(A)). Currently, the Bureau of Alcohol, Tobacco and Firearms within the Department of the Treasury is soliciting comments concerning the Application to Make and Register a Firearm.

DATES: Written comments should be received on or before December 18, 2000.

ADDRESSES: Direct all written comments to Bureau of Alcohol, Tobacco and Firearms, Linda Barnes, 650 Massachusetts Avenue, NW., Washington, DC 20226, (202) 927–8930.

FOR FURTHER INFORMATION CONTACT: Requests for additional information or copies of the form(s) and instructions should be directed to Gary Schaible, National Firearms Act Branch, 650 Massachusetts Avenue, NW., Washington, DC 20226, 927–8330.

SUPPLEMENTARY INFORMATION:

Title: Application to Make and Register a Firearm.

OMB Number: 1512–0024.

Form Number: ATF F 1 (5320.1).

Abstract: ATF F 1 (5320.1) is used by persons applying to make and register a firearm that falls within the purview of the National Firearms Act. The information supplied by the applicant on the form helps to establish the applicant's eligibility.

Current Actions: The form 1 application has been revised to include updated information, provide additional information relating to post-registration changes, and make the instructions consistent with other forms.

Type of Review: Extension with changes.

Affected Public: Individuals or households, Business or other for-profit, State, Local or Tribal Government.

Estimated Number of Respondents: 1,071.

Estimated Time Per Respondent: 4 hours.

Estimated Total Annual Burden Hours: 4,271.

Request for Comments

Comments submitted in response to this notice will be summarized and/or included in the request for OMB approval. All comments will become a matter of public record. Comments are invited on: (a) Whether the collection of information is necessary for the proper performance of the functions of the agency, including whether the information shall have practical utility; (b) the accuracy of the agency's estimate of the burden of the collection of information; (c) ways to enhance the quality, utility, and clarity of the information to be collected; (d) ways to minimize the burden of the collection of information on respondents, including through the use of automated collection techniques or other forms of information technology; and (e) estimates of capital or start-up costs and costs of operation, maintenance, and purchase of services to provide information.

Dated: October 10, 2000.

William T. Earle,

Assistant Director (Management) CFO.

[FR Doc. 00–26631 Filed 10–16–00; 8:45 am]

BILLING CODE 4810–31–P

DEPARTMENT OF THE TREASURY

Bureau of Alcohol, Tobacco and Firearms

Proposed Collection; Comment Request

ACTION: Notice and request for comments.

SUMMARY: The Department of the Treasury, as part of its continuing effort to reduce paperwork and respondent burden, invites the general public and other Federal agencies to take this opportunity to comment on proposed and/or continuing information collections, as required by the Paperwork Reduction Act of 1995, Public Law 104–13 (44 U.S.C. 3506(c)(2)(A)). Currently, the Bureau of Alcohol, Tobacco and Firearms within the Department of the Treasury is soliciting comments concerning the Bond Covering Removal To and Use of Wine At Vinegar Plant.

DATES: Written comments should be received on or before December 18, 2000.

ADDRESSES: Direct all written comments to Bureau of Alcohol, Tobacco and Firearms, Linda Barnes, 650 Massachusetts Avenue, NW., Washington, DC 20226, (202) 927–8930.

FOR FURTHER INFORMATION CONTACT: Requests for additional information or copies of the form(s) and instructions should be directed to Rich Mascolo, Chief, Regulations Division, 650 Massachusetts Avenue, NW., Washington, DC 20226, (202) 927–8210.

SUPPLEMENTARY INFORMATION:

Title: Bond Covering Removal To and Use of Wine At Vinegar Plant.

OMB Number: 1512–0529.

Form Number: ATF F 1676 (5510.2).

Abstract: ATF F 1676 (5510.2) is a bond form which serves as a contact between the proprietor of a vinegar plant and a surety. The bond coverage stated on the form is in an amount sufficient to cover the federal excise tax on wine in transit to and stored on the vinegar plant premises until the wine becomes vinegar.

Current Actions: There are no changes to this information collection and it is being submitted for extension purposes only.

Type of Review: Extension

Affected Public: Business or other for profit.

Estimated Number of Respondents: 25.

Estimated Time Per Respondent: 1 hour.

Estimated Total Annual Burden Hours: 25.

Request for Comments

Comments submitted in response to this notice will be summarized and/or included in the request for OMB approval. All comments will become a matter of public record. Comments are invited on: (a) Whether the collection of information is necessary for the proper performance of the functions of the agency, including whether the information shall have practical utility; (b) the accuracy of the agency's estimate of the burden of the collection of information; (c) ways to enhance the quality, utility, and clarity of the information to be collected; (d) ways to minimize the burden of the collection of information on respondents, including through the use of automated collection techniques or other forms of information technology; and (e) estimates of capital or start-up costs and costs of operation, maintenance, and purchase of services to provide information.

Dated: October 10, 2000.

William T. Earle,

Assistant Director (Management) CFO.

[FR Doc. 00–26632 Filed 10–16–00; 8:45 am]

BILLING CODE 4810–31–P

DEPARTMENT OF THE TREASURY

Bureau of Alcohol, Tobacco and Firearms

Proposed Collection; Comment Request

ACTION: Notice and request for comments.

SUMMARY: The Department of the Treasury, as part of its continuing effort to reduce paperwork and respondent burden, invites the general public and other Federal agencies to take this opportunity to comment on proposed and/or continuing information collections, as required by the Paperwork Reduction Act of 1995, Public Law 104–13 (44 U.S.C. 3506(c)(2)(A)). Currently, the Bureau of Alcohol, Tobacco and Firearms within the Department of the Treasury is soliciting comments concerning the Letter Application to Obtain Authorization for the Assembly of a Nonsporting Rifle or Nonsporting Shotgun for the Purpose of Testing and Evaluation.

DATES: Written comments should be received on or before December 18, 2000.

ADDRESSES: Direct all written comments to Bureau of Alcohol, Tobacco and Firearms, Linda Barnes, 650 Massachusetts Avenue, NW., Washington, DC 20226, (202) 927–8930.

FOR FURTHER INFORMATION CONTACT: Requests for additional information or copies of the form(s) and instructions should be directed to Dottie Morales, Firearms Programs Division, 650 Massachusetts Avenue, NW., Washington, DC 20226, (202) 927–7770.

SUPPLEMENTARY INFORMATION:

Title: Letter Application to Obtain Authorization for the Assembly of a Nonsporting Rifle or Nonsporting Shotgun for the Purpose of Testing and Evaluation.

OMB Number: 1512–0510.

Abstract: This information collection is required by ATF to provide a means to obtain authorization for the assembly of a nonsporting rifle or nonsporting shotgun for the purpose of testing or evaluation.

Current Actions: There are no changes to this information collection and it is being submitted for extension purposes only.

Type of Review: Extension.

Affected Public: Business or other for-profit, individuals or households.

Estimated Number of Respondents: 5.

Estimated Time Per Respondent: 30 minutes.

Estimated Total Annual Burden Hours: 3.

Request for Comments

Comments submitted in response to this notice will be summarized and/or included in the request for OMB approval. All comments will become a matter of public record. Comments are invited on: (a) Whether the collection of information is necessary for the proper performance of the functions of the agency, including whether the informtion shall have practical utility; (b) the accuracy of the agency's estimate of the burden of the collection of information; (c) ways to enhance the quality, utility, and clarity of the information to be collected; (d) ways to minimize the burden of the collection of information on respondents, including through the use of automated collection techniques or other forms of information technology; and (e) estimates of capital or start-up costs and costs of operation, maintenance, and purchase of services to provide information.

Dated: October 10, 2000.

William T. Earle,

Assistant Director (Management) CFO.

[FR Doc. 00–26633 Filed 10–16–00; 8:45 am]

BILLING CODE 4810–31–P

DEPARTMENT OF VETERANS AFFAIRS

[OMB Control No. 2900–0021]

Proposed Information Collection Activity: Proposed Collection; Comment Request

AGENCY: Veterans Benefits Administration, Department of Veterans Affairs.

ACTION: Notice.

SUMMARY: The Veterans Benefits Administration (VBA), Department of Veterans Affairs (VA), is announcing an opportunity for public comment on the proposed collection of certain information by the agency. Under the Paperwork Reduction Act (PRA) of 1995, Federal agencies are required to publish notice in the **Federal Register** concerning each proposed collection of information, including each proposed extension of a currently approved collection, and allow 60 days for public comment in response to the notice. This notice solicits comments for information needed to determine whether supplemental servicing might justify the extension of forbearance to the veteran-borrower as opposed to foreclosure.

DATES: Written comments and recommendations on the proposed collection of information should be received on or before December 18, 2000.

ADDRESSES: Submit written comments on the collection of information to Nancy J. Kessinger, Veterans Benefits Administration (20S52), Department of Veterans Affairs, 810 Vermont Avenue, NW, Washington, DC 20420. Please refer to ''OMB Control No. 2900–0021'' in any correspondence.

FOR FURTHER INFORMATION CONTACT: Nancy J. Kessinger at (202) 273–7079 or FAX (202) 275–5947.

SUPPLEMENTARY INFORMATION: Under the PRA of 1995 (Public Law 104–13; 44 U.S.C., 3501–3520), Federal agencies must obtain approval from the Office of Management and Budget (OMB) for each collection of information they conduct or sponsor. This request for comment is being made pursuant to Section 3506(c)(2)(A) of the PRA.

With respect to the following collection of information, VBA invites comments on: (1) whether the proposed collection of information is necessary for the proper performance of VBA's functions, including whether the information will have practical utility; (2) the accuracy of VBA's estimate of the burden of the proposed collection of information; (3) ways to enhance the quality, utility, and clarity of the information to be collected; and (4) ways to minimize the burden of the collection of information on respondents, including through the use of automated collection techniques or the use of other forms of information technology.

Titles and Form Numbers: Notice of Default, VA Form 26–6850, Notice of Default and Intention to Foreclose, VA Form 26–6850a and Notice of Intention to Foreclose, VA Form 26–6851.

OMB Control Number: 2900–0021.

Type of Review: Extension of a currently approved collection.

Abstract: Holders of guaranteed loans are required to notify VA within 45 days of a loan default by reason of nonpayment of any installment for a period of 60 days from the date of the first uncured default of their intention to foreclose. After delivery of such notice to VA, 30 days must pass before the holder can begin court proceedings or give notice of sale under power of sale or otherwise take steps to terminate the debtor's rights in the security. Many times, defaults are determined insoluble by holders at the time the notice of default is to be filed with VA. In such cases, the holders are requested to file VA Form 26–6850a, which will provide both notices of default and intent to foreclose together on one form. VA

Form 26–6850a requires that servicing efforts be fully explained so that VA can determine whether supplemental servicing could develop further information which might justify the extension of forbearance to the veteran-borrower as opposed to foreclosure. The information provided is used to coordinate the actions of VA and the holder to ensure that all legal requirements regarding foreclosure and claim payment are met.

Affected Public: Individuals or households, Business or other for profit.

Estimated Annual Burden: 66,166.

a. VA Form 26–6850—20,166 hours.

b. VA Form 26–6850a—26,000 hours.

c. VA Form 26–6851—20,000 hours.

Estimated Average Burden Per Respondent:

a. VA Form 26–6850—10 minutes.

b. VA Form 26–6850a—20 minutes.

c. VA Form 26–6851—15 minutes.

Frequency of Response: On occasion.

Estimated Number of Respondents: 279,000 hours.

a. VA Form 26–6850—121,000 hours.

b. VA Form 26–6850a—78,000 hours.

c. VA Form 26–6851—80,000 hours.

Dated: September 22, 2000.

By direction of the Acting Secretary.

Donald L. Neilson,

Director, Information Management Service.

[FR Doc. 00–26663 Filed 10–16–00; 8:45 am]

BILLING CODE 8320–01–P

DEPARTMENT OF VETERANS AFFAIRS

[OMB Control No. 2900–0300]

Proposed Information Collection Activity: Proposed Collection; Comment Request

AGENCY: Veterans Benefits Administration, Department of Veterans Affairs.

ACTION: Notice.

SUMMARY: The Veterans Benefits Administration (VBA), Department of Veterans Affairs (VA), is announcing an opportunity for public comment on the proposed collection of certain information by the agency. Under the Paperwork Reduction Act (PRA) of 1995, Federal agencies are required to publish notice in the **Federal Register** concerning each proposed collection of information, including each proposed extension of a currently approved collection, and allow 60 days for public comment in response to the notice. This notice solicits comments for information needed to authorize assistance to disabled veterans acquiring special housing adaptations.

DATES: Written comments and recommendations on the proposed collection of information should be received on or before December 18, 2000.

ADDRESSES: Submit written comments on the collection of information to Nancy J. Kessinger, Veterans Benefits Administration (20S52), Department of Veterans Affairs, 810 Vermont Avenue, NW., Washington, DC 20420. Please refer to ''OMB Control No. 2900–0300'' in any correspondence.

FOR FURTHER INFORMATION CONTACT: Nancy J. Kessinger at (202) 273–7079 or FAX (202) 275–5947.

SUPPLEMENTARY INFORMATION: Under the PRA of 1995 (Public Law 104–13; 44 U.S.C., 3501—3520), Federal agencies must obtain approval from the Office of Management and Budget (OMB) for each collection of information they conduct or sponsor. This request for comment is being made pursuant to Section 3506(c)(2)(A) of the PRA.

With respect to the following collection of information, VBA invites comments on: (1) Whether the proposed collection of information is necessary for the proper performance of VBA's functions, including whether the information will have practical utility; (2) the accuracy of VBA's estimate of the burden of the proposed collection of information; (3) ways to enhance the quality, utility, and clarity of the information to be collected; and (4) ways to minimize the burden of the collection of information on respondents, including through the use of automated collection techniques or the use of other forms of information technology.

Title: Veterans Application for Assistance in Acquiring Special Housing Adaptations, VA Form 26–4555d.

OMB Control Number: 2900–0300.

Type of Review: Extension of a currently approved collection.

Abstract: VA Form 26–4555d is used by disabled veterans in applying for special housing and adaptations to dwellings. Grants are available to assist disabled veterans in making adaptations to their current residences or one, which they intend to live in as long as the veteran or a member of the veteran's family owns the home. It also provides information for use in approving or disapproving a veteran's application for a grant.

Affected Public: Individuals or households.

Estimated Annual Burden: 25 hours.

Estimated Average Burden Per Respondent: 20 minutes.

Frequency of Response: On occasion.

Estimated Number of Respondents: 75.

Dated: September 22, 2000.

By direction of the Acting Secretary.

Donald L. Neilson,

Director, Information Management Service.

[FR Doc. 00–26664 Filed 10–16–00; 8:45 am]

BILLING CODE 8320–01–P

DEPARTMENT OF VETERANS AFFAIRS

[OMB Control No. 2900–0386]

Agency Information Collection Activities Under OMB Review

AGENCY: Veterans Benefits Administration, Department of Veterans Affairs.

ACTION: Notice.

SUMMARY: In compliance with the Paperwork Reduction Act (PRA) of 1995 (44 U.S.C., 3501 *et seq.*), this notice announces that the Veterans Benefits Administration (VBA), Department of Veterans Affairs, has submitted the collection of information abstracted below to the Office of Management and Budget (OMB) for review and comment. The PRA submission describes the nature of the information collection and its expected cost and burden; it includes the actual data collection instrument.

DATES: Comments must be submitted on or before November 16, 2000.

For Further Information or a Copy of the Submission Contact: Denise McLamb, Information Management Service (045A4), Department of Veterans Affairs, 810 Vermont Avenue, NW., Washington, DC 20420, (202) 273–8030 or FAX (202) 273–5981. Please refer to ''OMB Control No. 2900–0386.''

SUPPLEMENTARY INFORMATION:

Title: Interest Rate Reduction Refinancing Loan Worksheet, VA Form 26–8923.

OMB Control Number: 2900–0386.

Type of Review: Extension of a currently approved collection.

Abstract: Lenders are required to submit the form when requesting guaranty on an interest rate reduction refinancing loan. VA loan examiners must assure that the requirements of the Deficit Reduction of 1984 and applicable VA regulations have been met before the issuance of guaranty. The form ensures that lenders correctly compute the funding fee and the maximum permissible loan amount for interest rate reduction refinancing loans.

An agency may not conduct or sponsor, and a person is not required to respond to a collection of information unless it displays a currently valid OMB

control number. The **Federal Register** Notice with a 60-day comment period soliciting comments on this collection of information was published on June 23, 2000, at page 39231.

Affected Public: Business or other for-profit.

Estimated Annual Burden: 8,333 hours.

Estimated Average Burden Per Respondent: 10 minutes.

Frequency of Response: On occasion.

Estimated Number of Respondents: 50,000.

Send comments and recommendations concerning any aspect of the information collection to VA's Desk Officer, OMB Human Resources and Housing Branch, New Executive Office Building, Room 10235, Washington, DC 20503 (202) 395–7316. Please refer to ''OMB Control No. 2900–0386'' in any correspondence.

Dated: September 22, 2000.

By direction of the Acting Secretary.

Donald L. Neilson,

Director, Information Management Service.

[FR Doc. 00–26660 Filed 10–16–00; 8:45 am]

BILLING CODE 8320–01–P

DEPARTMENT OF VETERANS AFFAIRS

[OMB Control No. 2900–0394]

Agency Information Collection Activities Under OMB Review

AGENCY: Veterans Benefits Administration, Department of Veterans Affairs.

ACTION: Notice.

SUMMARY: In compliance with the Paperwork Reduction Act (PRA) of 1995 (44 U.S.C., 3501 *et seq.*), this notice announces that the Veterans Benefits Administration (VBA), Department of Veterans Affairs, has submitted the collection of information abstracted below to the Office of Management and Budget (OMB) for review and comment. The PRA submission describes the nature of the information collection and its expected cost and burden; it includes the actual data collection instrument.

DATES: Comments must be submitted on or before November 16, 2000.

For Further Information or a Copy of the Submission Contact: Denise McLamb, Information Management Service (045A4), Department of Veterans Affairs, 810 Vermont Avenue, NW., Washington, DC 20420, (202) 273–8030 or FAX (202) 273–5981. Please refer to ''OMB Control No. 2900–0394.''

SUPPLEMENTARY INFORMATION:

Title: Certification of School Attendance—REPS, VA Form 21–8926.

OMB Control Number: 2900–0394.

Type of Review: Extension of a currently approved collection.

Abstract: VA Form 21–8926, Certification of School Attendance—REPS is used to verify that an individual who is receiving REPS benefits based on schoolchild status is in fact enrolled full-time in an approved school and is otherwise eligible for continued benefits. The program pays VA benefits to certain surviving spouses and children of veterans who died in service prior to August 13, 1981 or who died as a result of a service-connected disability incurred or aggravated prior to August 13, 1981.

An agency may not conduct or sponsor, and a person is not required to respond to a collection of information unless it displays a currently valid OMB control number. The **Federal Register** Notice with a 60-day comment period soliciting comments on this collection of information was published on July 14, 2000 at page 43838.

Affected Public: Individuals or households.

Estimated Annual Burden: 300 hours.

Estimated Average Burden Per Respondent: 15 minutes.

Frequency of Response: On occasion.

Estimated Number of Respondents: 1,200.

Send comments and recommendations concerning any aspect of the information collection to VA's Desk Officer, OMB Human Resources and Housing Branch, New Executive Office Building, Room 10235, Washington, DC 20503 (202) 395–7316. Please refer to ''OMB Control No. 2900–0394'' in any correspondence.

Dated: September 22, 2000.

By direction of the Acting Secretary.

Donald L. Neilson,

Director, Information Management Service.

[FR Doc. 00–26661 Filed 10–16–00; 8:45 am]

BILLING CODE 8320–01–P

DEPARTMENT OF VETERANS AFFAIRS

[OMB Control No. 2900–0459]

Agency Information Collection Activities Under OMB Review

AGENCY: Veterans Benefits Administration, Department of Veterans Affairs.

ACTION: Notice.

SUMMARY: In compliance with the Paperwork Reduction Act (PRA) of 1995 (44 U.S.C., 3501 *et seq.*), this notice announces that the Veterans Benefits Administration (VBA), Department of Veterans Affairs, has submitted the collection of information abstracted below to the Office of Management and Budget (OMB) for review and comment. The PRA submission describes the nature of the information collection and its expected cost and burden; it includes the actual data collection instrument.

DATES: Comments must be submitted on or before November 16, 2000.

For Further Information or a Copy of the Submission Contact: Denise McLamb, Information Management Service (045A4), Department of Veterans Affairs, 810 Vermont Avenue, NW, Washington, DC 20420, (202) 273–8030 or FAX (202) 273–5981. Please refer to ''OMB Control No. 2900–0459.''

SUPPLEMENTARY INFORMATION:

Title: Property Management Consolidated Invoice, VA Form 26–8974.

OMB Control Number: 2900–0459.

Type of Review: Reinstatement, with change, of a previously approved collection for which approval has expired.

Abstract: The Consolidated Property Management Invoice is computer-generated by VA and sent to management brokers monthly to obtain management brokers' bills for reimbursement of expenses and payment of fees associated with management of VA-acquired properties.

An agency may not conduct or sponsor, and a person is not required to respond to a collection of information unless it displays a currently valid OMB control number. The **Federal Register** Notice with a 60-day comment period soliciting comments on this collection of information was published on November 29, 1999, at page 66696.

Affected Public: Business or other for-profit.

Estimated Annual Burden: 44,000 hours.

Estimated Average Burden Per Respondent: 10 minutes.

Frequency of Response: Monthly.

Estimated Number of Respondents: 1,080.

Estimated Number of Responses: 22,000.

Send comments and recommendations concerning any aspect of the information collection to VA's OMB Desk Officer, Allison Eydt, OMB Human Resources and Housing Branch, New Executive Office Building, Room 12035, Washington, DC 20503 (202) 395–4650. Please refer to ''OMB Control No. 2900–0459'' in any correspondence.

Dated: September 20, 2000.

By direction of the Acting Secretary.

Donald L. Neilson,

Director, Information Management Service.

[FR Doc. 00–26662 Filed 10–16–00; 8:45 am]

BILLING CODE 8320–01–P

DEPARTMENT OF VETERANS AFFAIRS

Advisory Committee on Women Veterans, Notice of Meeting

The Department of Veterans Affairs gives notice under Public Law 92–463 that a meeting of the Advisory Committee on Women Veterans will be held on October 24–26, 2000, at the Department of Veterans Affairs, 810 Vermont Avenue, NW, Washington, DC. All meetings will be held in conference room 230.

The purpose of the Committee is to advise the Secretary of Veterans Affairs regarding the needs of women veterans with respect to health care, rehabilitation, compensation, outreach, and other programs and activities administered by the Department of Veterans Affairs designed to meet such needs. The Committee will make recommendations to the Secretary regarding such activities.

All sessions will be open to the public. Those who plan to attend should contact Ms. Maryanne Carson, Department of Veterans Affairs, Center for Women Veterans, 810 Vermont Avenue, NW, Washington, DC 20420, at (202) 273–6193. Tentative agenda follows:

Tuesday, October 24

8:30a: Welcome and Introduction of New Members, Ms. Joan Furey
9:00a: Presentation of Appointment Certificates, The Honorable Hershel Gober, Acting Secretary of Veterans Affairs (Tentative)
9:30a–12n: Completion of 2000 Report
12n: Lunch
1:30p: Review of Agenda, Chair, Karen Ray, Col., USA (Ret)
2:00p: Role of the Advisory Committee in the Development of VA Programs for Women, Princess Aisha of Jordan (Tentative)
2:45p: Break
3:00p: Committee Update, Col. Ray
3:30p: Center for Women Veterans Update, Ms. Furey
4:15p: General Discussion, Committee
5:00p: Adjourn

Wednesday, October 25

8:30a: Persian Gulf Research Initiatives, Dr. Kelly Brix
9:15a: Veterans Health Administration, Ms. Carole Turner, Director, Women Veterans' Health Programs
10:15a: Break
10:30a: Veterans Benefits Administration, Ms. Lynda Petty, Women Veterans Coordinator
11:00a: Women Veterans Homeless Initiative, Ms. Gay Koerber and Dr. Robert Rosenheck
12n: Lunch
1:30p: Services for Women, Dr. Alfonso Batres, Director, Readjustment and Counseling Service
2:15p: Providing Services for African American Women Veterans: Factors to Consider, Col. Ray
3:00p: Break
3:15p: Providing Services for Hispanic Women Veterans: Factors to Consider, Committee Members: Ms. Consuelo Kickbusch and Ms. Bertha Cruz Hall
4:00p: General Discussion, Committee
5:00p: Adjourn

Thursday, October 26

9:00a: Planning Session: Committee

- Review 2000 Report
- FY 2001 Objectives
- Subcommittee Assignments
- Site Visit Designation
- Set Date for Next Meeting

1:00p: Adjourn

By direction of the Secretary.

Dated: October 10, 2000.

Marvin R. Eason, By direction of the Secretary.

Committee Management Officer.

[FR Doc. 00–26665 Filed 10–16–00; 8:45 am]

BILLING CODE 8320–01–M

Federal Register

Tuesday,
October 17, 2000

Part II

Environmental Protection Agency

40 CFR Part 60, 61, and 63
Amendments for Testing and Monitoring Provisions; Final Rule

ENVIRONMENTAL PROTECTION AGENCY

40 CFR Parts 60, 61, and 63

[FRL–6523–6]

RIN 2060–AG21

Amendments for Testing and Monitoring Provisions

AGENCY: Environmental Protection Agency (EPA).

ACTION: Final rule: amendments.

SUMMARY: In this rule, we, the Environmental Protection Agency (EPA) are making final minor amendments to our stationary source testing and monitoring rules. These amendments include miscellaneous editorial changes and technical corrections that are needed. We are also promulgating Performance Specification 15, which contains the criteria for certifying continuous emission monitoring systems (CEMS) that use fourier transform infrared spectroscopy (FTIR). In addition, we are changing the outline of the test methods and CEMS performance specifications already listed in Parts 60, 61, and 63 to fit a new format recommended by the Environmental Monitoring Management Council (EMMC). The editorial changes and technical corrections update the rules and help maintain their original intent. Performance Specification 15 will provide the needed acceptance criteria for FTIR CEMS as they emerge as a new technology. We are reformatting the test methods and performance specifications to make them more uniform in content and interchangeable with other Agency methods. The amendments apply to a large number of industries that are already subject to the current provisions of Parts 60, 61, and 63. Therefore, we have not listed specific affected industries or their Standard Industrial Classification codes here.

DATES: *Effective Date.* This regulation is effective October 17, 2000. The incorporation by reference of certain publications listed in the rule is approved by the Director of the Federal Register as of October 17, 2000.

ADDRESSES: *Docket.* Docket No. A–97–12, contains information relevant to this rule. You can read and copy it between 8 a.m. and 5:30 p.m., Monday through Friday, (except for Federal holidays), at our Air and Radiation Docket and Information Center, U.S. Environmental Protection Agency, 401 M Street, SW., Washington, DC 20460; telephone (202) 260–7548. Go to Room M–1500, Waterside Mall (ground floor). The docket office may charge a reasonable fee for copying.

Summary of Comments and Responses Document. You may obtain the Summary of Comments and Responses Document over the Internet at http://www.epa.gov/ttn/emc; choose the ''Methods'' menu, then choose the ''Summary of Comments and Responses'' hypertext under Category A.

FOR FURTHER INFORMATION CONTACT: Mr. Foston Curtis, Emission Measurement Center (MD–19), Emissions, Monitoring, and Analysis Division, U.S. Environmental Protection Agency, Research Triangle Park, North Carolina 27711; telephone (919) 541–1063; facsimile number (919) 541–1039; electronic mail address ''curtis.foston@epamail.epa.gov''.

SUPPLEMENTARY INFORMATION: *Outline.* The information presented in this preamble is organized as follows:

I. Why were these amendments made?
II. What does the new EMMC Format for methods look like?
III. What were the significant public comments and what resulting changes were made since proposal?
A. Updates to the ASTM Methods
B. Performance requirements for continuous instrumental methods of Part 60—Methods 3A, 6C, 7E, 10, and 20
C. Method 18 (Part 60)
D. Method 25 (Part 60)
E. Performance Specification 15 (Part 60)
IV. What revisions were made that were not in the proposed rule?
V. What are the administrative requirements for this rule?
A. Docket
B. Office of Management and Budget Review
C. Regulatory Flexibility Act Compliance
D. Paperwork Reduction Act
E. Unfunded Mandates Reform Act
F. E.O. 13132—Federalism
G. E.O. 13084—Consultation and Coordination with Indian Tribal Governments
H. Executive Order 13084—Protection of Children from Environmental Health Risks and Safety Risks
I. Submission to Congress and the General Accounting Office
J. National Technology Transfer and Advancement Act
K. Plain Language in Government Writing

I. Why Were These Amendments Made?

We have compiled miscellaneous errors and editions that are needed for the test methods, performance specifications, and associated regulations in 40 CFR Parts 60, 61, and 63. The corrections and revisions consist primarily of typographical errors, technical errors in equations and diagrams, and narrative that is no longer applicable or is obsolete. Some of the revisions were brought to our attention by the public. The major changes to the rule proposed on August 27, 1997 that resulted from public comments are discussed in Section III. Please note that, although numerous technical corrections were made to Parts 60, 61, and 63 rules, none affected a compliance standard or reporting or recordkeeping requirement. Revisions were only made to sections that pertain to source testing or monitoring of emissions and operations.

II. What Does the New EMMC Format for Methods Look Like?

The new EMMC format we have adopted for analytical methods was developed by consensus and will help integrate make consistent the test methods written by different EPA programs. The test methods and performance specifications being restructured in the new format are shown in Table 1.

TABLE 1.—TEST METHODS AND PERFORMANCE SPECIFICATIONS RESTRUCTURED IN THE EMMC FORMAT

40 CFR 60 App. A	40 CFR 60 App. B	40 CFR 61	40 CFR 63
1, 1A	PS–2	101, 101A	303, 303A
2, 2A, 2B, 2C, 2D, 2E	PS–3	102	304A, 304B
3, 3A, 3B	PS–4, PS–4A	103	305
4	PS–5	104	306, 306A, 306B
5, 5A, 5B, 5D, 5E, 5F, 5G, 5H	PS–6	105	
6, 6A, 6B, 6C		106	
7, 7A 7B, 7C, 7D, 7E		107, 107A	
8		108, 108A, 108B, 108C	
10, 10A, 10B		111	
11			
12			

TABLE 1.—TEST METHODS AND PERFORMANCE SPECIFICATIONS RESTRUCTURED IN THE EMMC FORMAT—Continued

40 CFR 60 App. A	40 CFR 60 App. B	40 CFR 61	40 CFR 63
13A, 13B			
14			
15, 15A			
16, 16A, 16B			
17			
18			
19			
20			
21			
22			
23			
24, 24A			
25, 25A, 25B, 25C, 25D, 25E			
26, 26A			
27			
28, 28A			
29			

The methods and specifications listed in Table 1 were restructured in the format shown in Table 2. Only in a few instances were there deviations from this recommended format.

TABLE 2.—EMMC FORMAT

Section No.	Section heading
1.0	Scope and Application.
2.0	Summary of the Method.
3.0	Definitions.
4.0	Interferences.
5.0	Safety.
6.0	Equipment and Supplies.
7.0	Reagents and Standards.
8.0	Sample Collection, Preservation, Storage and Transport.
9.0	Quality Control.
10.0	Calibration and Standardization.
11.0	Analytical Procedure.
12.0	Calculations and Data Analysis.
13.0	Method Performance.
14.0	Pollution Prevention.
15.0	Waste Management.
16.0	References.
17.0	Tables, Diagrams, Flowcharts, and Validation Data.

III. What Were the Significant Public Comments and What Resulting Changes Were Made Since Proposal?

We asked that public comments on the August 27, 1997 proposal (62 FR 45369) be submitted by October 27, 1997. On November 18, 1997, we reopened (62 FR 61483) the comment period to allow additional time for review and comment. We received comments from facility owners and operators, trade associations, State and Local air pollution control agencies, environmental consultants, and private citizens. Their comments were considered in developing this final action. A detailed discussion of all comments are contained in the Summary of Comments and Responses Document (see **ADDRESSES** section of this preamble). The major public comments and the Agency's responses are summarized below.

A. Update to ASTM Methods

Several commenters supported our updating the references to ASTM Standards to include the dates of the most recent versions. However, some were concerned that updated standards not supplant the versions previously allowed and those promulgated with the original regulation. The ASTM recommended we follow the tradition of other governmental agencies and list only the latest version of each standard. This would present the latest, most improved standard. They felt that previously approved versions would still be acceptable for future use, and this could be noted in the preamble to the final rule.

On January 14, 1998, we published a supplementary **Federal Register** notice to solicit public comments on this idea. We received three comment letters. All commenters objected to the idea of listing only the latest version of the ASTM standard. The commenters noted problems that would be encountered with State Implementation Plans (SIP) wherein only the specific ASTM standards listed in the subparts would be allowed. They feared that listing only the latest version of the standard would change the current allowance to use earlier versions. This could potentially change the intent of the original emission standard. Most commenters didn't think a preamble explanation was sufficient assurance for continued allowance of earlier versions since preambles are not published in the Code of Federal Regulations. There were additional concerns for laboratories using currently acceptable versions who would need to upgrade their practice to reflect the latest version of a standard. The commenters were not amenable to only listing the latest standard unless

language were added to the General Provisions of each part stating that previously allowed versions of the standards were still allowed at the discretion of the source. We feel the commenters have valid concerns and have decided to continue the convention of listing all acceptable versions of the ASTM standards including the new updates. The intent of this action is to allow any of the yearly-designated versions of a specific standard to be used in the applications where cited.

B. Performance Requirements for Continuous Instrumental Methods of Part 60—Methods 3A, 6C, 7E, 10, and 20

Several commenters thought the preamble language for this proposal gave inadequate notice of the changes being made. Commenters stated that, in the proposal, we did not provide an adequate basis and purpose statement and misled the readers into thinking that the proposal contained no substantive changes to these test methods. Based on the number of substantive changes in this proposal, and in light of the Section 307(d) requirements, the commenters felt that we must address these issues in a new proposal before the revisions can go final with the rest of the package. We agree with the commenters that the preamble to the proposed rule may not have given adequate public notice for some of the revisions. The revisions to the continuous instrumental methods (Methods 3A, 6C, 7E, 10, and 20) may be considered substantive, but were not enumerated in the preamble nor was a supporting rationale given. Therefore, the revisions to Methods 3A, 6C, 7E, 10, and 20 will be reproposed as a separate rule. The comments already received on the proposal of these methods will be held for consideration with any future comments that result from the reproposal.

C. Method 18 (Part 60, Appendix A)

One commenter thought Method 18 was difficult to follow. The commenter suggested that, to simplify organization of the method, we should divide the method into five categories. Each title would begin with ''Measurement of Gaseous Organic Compounds by Gas Chromatography'' but have the following subtitles:

18A—Evacuated container sampling procedure.
18B—Bag sampling procedure.
18C—Direct interface procedure.
18D—Dilution interface procedure.
18E—Adsorption tube sampling procedure.

Another commenter suggested dividing the method into two different methods, one for the direct extractive technique, and the other for sample collection into bags, flasks, or adsorbents.

The method is currently divided according to the various sampling procedures; for example, Section 8.2.2 is the Direct Interface Sampling and Analysis Procedures, Section 8.2.3 is Dilution Interface Sampling and Analysis Procedures, and so on. We do not believe that multiple sampling procedures warrant dividing Method 18 into separate methods. We feel a single method allowing different procedures offers the source greater flexibility than citing specific procedures for particular situations. One commenter noted that the proposed method requires triplicate injections for analysis of the calibration standards used for preparing the pre-test calibration curve, triplicate injections of the test samples, and triplicate injections for construction of the post-test calibration curve. The commenter questioned the additional accuracy expected for the extra hours spent in sample analysis and calibration while in the field conducting a source test compared to the current method which requires two consecutive analyses for pre- and post-test calibration and sample analyses meeting the same criteria for acceptance. We are increasing the calibration requirement to triple injections to tighten the method's quality assurance procedures. Triplicate calibration injections is the normal procedure prevalent in the analytical community, as well as in other Agency methodologies. It is difficult to establish precision and accuracy with duplicate injections. However, triplicate injections provide a reasonable measure of analytical precision without being overly burdensome. We do not feel the increase in time and costs associated with the third injection will significantly affect a typical test, considering the added benefits to data quality that are gained.

Several commenters asked us to revise and clarify various aspects of Section 10. We have made these modifications to address their concerns.

Regarding Section 13.1, one commenter noted that Method 18 is not a method in the general sense, but is more of a guideline on how to develop and document a test method. The commenter therefore felt that any prospective method should be written up and submitted to us along with the proper documentation that includes recovery study results. We disagree with this commenter. Method 18, which has been cited and used for many years, is a specific gas chromatography method with specific sampling, analytical, and data quality requirements. The method was written to accomodate many test sites having many possible target compounds and gas matrices. The tester has been given numerous sampling, separation, and analytical system options to make the method adaptable to the needs of various compliance demonstrations.

Several commenters asked us to clarify the 5 to 10 percent relative standard deviation (RSD) requirement for calibration standards in Section 13.1.

We have added clarity to Section 13.1. The 5 to 10 percent RSD is not a precision criterion for calibration standards but a typical precision range for analyzing field samples. Five percent RSD is required for triplicate injections of calibration standards.

D. Method 25 (Part 60, Appendix A)

One commenter noted that Method 25 has limitations due to conditions that may exist in stack gas. If such conditions exist, the commenter recommends interfacing a nonmethane analyzer directly to the source or use Method 25A or 25B to measure the emissions. The commenter recommended modifying Method 25 to allow instruments that are able to determine the methane and nonmethane portions using components different from those described by Method 25 when the analyzer is directly interfaced to the source. The commenter feels that Method 25 would be more practical for determining methane/nonmethane emissions at the field site if the method could be modified to allow these other analyzers. The commenter feels that it will also be necessary that fixed performance specifications be defined in the method, such as those for Method 6C. We believe these comments address method changes that are beyond those covered in the proposal and are, therefore, beyond the scope of this action. The commenter is encouraged to pursue these method changes through other appropriate channels such as submitting a request to use them as an alternative method.

E. Performance Specification 15 (Part 60, Appendix B)

One commenter noted that the statement of applicability for the demonstration is limited to the criteria we gave. The commenter stated that, with performance based measurement systems, the focus is on data quality objectives (DQO) where the performance specifications are coupled with the DQO. We believe the purpose of reference methods and, in this case

performance specifications, is to provide standard procedures for sources to follow in order to provide quality emission data. However, we do provide latitude to sources by publishing performance-based methods and PS whenever possible. This performance specification is one such procedure; as long as an FTIR sampling system meets the requirements of the performance specifications, it can be used for any regulated pollutant.

Based on public comments and upon further deliberation, we have removed the system calibration requirement from Section 10.3 of PS–15. Since both a system calibration and the calibration transfer standard measurement basically test instrument function, having both of these requirements in the performance specifications is redundant.

One commenter felt that the number of runs should be given as ''guidance'' rather than made a requirement. We set the requirement for nine runs (when comparing the FTIR to a reference method) and 10 runs (when comparing the FTIR to a reference monitor) because these are standard prodedures for performance specifications. We note that this performance specification also allows analyte spiking as an option; therefore, a revision on this point is not necessary.

One commenter noted that Section 11.1.1.4.3 states ''if the RM is a CEM, synchronize the sampling flow rates of the RM and the FTIR CEM.'' The commenter noted that instrumental analyzers are currently used for reference methods. EPA Methods 6C, 7E, 3A, and 10 measure SO_2, NO_X, O_2, CO_2, and CO on a continuous basis for a short period of time and are referred to as instrumental analyzers and not CEMs. The commenter felt the statement should read ''if the reference method is an instrumental analyzer, synchronize the sampling flow rates of the RM and the FTIR.'' We agree with the commenter and have made the noted change.

IV. What Revisions Were Made That Were Not in the Proposed Rule?

A revision was made to Section 6.6 of Method 21 of Part 60 to clarify the VOC monitoring instrument specifications. The requirement for the instrument to be intrinsically safe for Classes 1 and 2, Division 1 conditions has been amended to require them to be intrinsically safe for Class 1 and/or Class 2, Division 1 conditions, as appropriate. The performance test provisions of § 60.754(d) for determining control device efficiency when combusting landfill gas were amended to allow the use of Method 25 as an alternative to Methods 18 and 25C. The tester has the option of using either Method 18, 25, or 25C in this case. These amendments were not published in the proposed rule.

V. Administrative Requirements

A. Docket

Docket A–97–12 is an organized and complete file of all information submitted to us or otherwise considered in the development of this final rulemaking. The principal purposes of the docket are: (1) to allow interested parties to identify and locate documents so that they can effectively participate in the rulemaking process, and (2) to serve as the record in case of judicial review (except for interagency review materials) [Clean Air Act Section 307(d)(7)(A), 42 U.S.C. 7607(d)(7)(A)].

B. Office of Management and Budget Review

Under Executive Order 12866 (58 FR 51735 October 4, 1993), we must determine whether the regulatory action is ''significant'' and therefore subject to Office of Management and Budget (OMB) review and the requirements of this Executive Order. The Order defines ''significant regulatory action'' as one that is likely to result in a rule that may: (1) Have an annual effect on the economy of $100 million or more or adversely affect in a material way the economy, a sector of the economy, productivity, competition, jobs, the environment, public health or safety, or State, Local, or Tribal governments or communities; (2) Create a serious inconsistency or otherwise interfere with an action taken or planned by another agency; (3) Materially alter the budgetary impact of entitlements, grants, user fees, or loan programs, or the rights and obligations of recipients thereof; or (4) Raise novel legal or policy issues arising out of legal mandates, the President's priorities, or the principles set forth in the Executive Order.

We have determined that this rule is not a ''significant regulatory action'' under the terms of Executive Order 12866 and is therefore not subject to OMB review. We have determined that this regulation would result in none of the economic effects set forth in Section 1 of the Order because it does not impose emission measurement requirements beyond those specified in the current regulations, nor does it change any emission standard.

C. Regulatory Flexibility Act Compliance

We have determined that it is not necessary to prepare a regulatory flexibility analysis in connection with this final rule. We have also determined that this rule will not have a significant economic impact on a substantial number of small businesses. This rulemaking does not impose emission measurement requirements beyond those specified in the current regulations, nor does it change any emission standard.

D. Paperwork Reduction Act

This rule does not impose or change any information collection requirements. The Paperwork Reduction Act of 1980, 44 U.S.C. 3501, *et seq.,* is not required.

E. Unfunded Mandates Reform Act

Title II of the unfunded Mandates Reform Act of 1995 (UMRA), Pub. L. 104–4, establishes requirements for Federal agencies to assess the effects of their regulatory action on State, local, and tribal governments and the private sector. Under section 202 of the UMRA, we generally must prepare a written statement, including a cost-benefit analysis, for proposed and final rules with ''Federal mandates'' that may result in expenditures by State, local, and tribal governments, in the aggregate, or by the private sector, of $100 million or more in any one year. Before promulgating an EPA rule for which a written statement is needed, Section 205 of the UMRA generally requires us to identify and consider a reasonable number of regulatory alternatives and adopt the least costly, most cost-effective or least burdensome alternative that achieves the objectives of the rule. The provisions of Section 205 do not apply when they are inconsistent with applicable law. Moreover, Section 205 allows EPA to adopt an alternative other than the least costly, most cost-effective or least burdensome alternative if the Administrator publishes with the final rule an explanation why that alternative was not adopted. Before we establish any regulatory requirement that may significantly or uniquely affect small governments, including tribal governments, we must develop a small government agency plan as required under Section 203 of the UMRA. The plan must provide for notifying potentially affected small governments, enabling officials of affected small governments to have meaningful and timely input in the development of our regulatory proposals with significant Federal intergovernmental mandates, and informing, educating, and advising small governments on compliance with the regulatory requirements.

Today's rule contains no Federal mandates (under the regulatory

provisions of Title II of the UMRA) for State, local, or tribal governments or the private sector. We have determined that today's rule does not include a Federal mandate because it imposes no enforceable duty on any State, local, and tribal governments, or the private sector. Today's rule simply makes corrections and minor revisions to current testing requirements and promulgates a monitoring specification that can be used to support future monitoring rules. For the same reason we have also determined that this rule contains no regulatory requirements that might significantly or uniquely affect small governments.

F. Executive Order 13132 (Federalism)

Executive Order 13132, entitled ''Federalism'' (64 FR 43255, August 10, 1999), requires EPA to develop an accountable process to ensure ''meaningful and timely input by State and local officials in the development of regulatory policies that have federalism implications.'' ''Policies that have federalism implications'' is defined in the Executive Order to include regulations that have ''substantial direct effects on the States, on the relationship between the national government and the States, or on the distribution of power and responsibilities among the various levels of government.'' Under Executive Order 13132, EPA may not issue a regulation that has federalism implications, that imposes substantial direct compliance costs, and that is not required by statute, unless the Federal government provides the funds necessary to pay the direct compliance costs incurred by State and local governments, or EPA consults with State and local officials early in the process of developing the proposed regulation. EPA also may not issue a regulation that has federalism implications and that preempts State law unless the Agency consults with State and local officials early in the process of developing the proposed regulation.

If EPA complies by consulting, Executive Order 13132 requires EPA to provide to the Office of Management and Budget (OMB), in a separately identified section of the preamble to the rule, a federalism summary impact statement (FSIS). The FSIS must include a description of the extent of EPA's prior consultation with State and local officials, a summary of the nature of their concerns and the agency's position supporting the need to issue the regulation, and a statement of the extent to which the concerns of State and local officials have been met. Also, when EPA transmits a draft final rule with federalism implications to OMB for review pursuant to Executive Order 12866, EPA must include a certification from the agency's Federalism Official stating that EPA has met the requirements of Executive Order 13132 in a meaningful and timely manner.

This final rule will not have substantial direct effects on the States, on the relationship between the national government and the States, or on the distribution of power and responsibilities among the various levels of government, as specified in Executive Order 13132. This final rule simply makes corrections and minor revisions to current testing requirements and promulgates a monitoring specification that can be used to support future monitoring rules. Thus, the requirements of section 6 of the Executive Order do not apply to this rule.

G. Executive Order 13084: Consultation and Coordination With Indian Tribal Governments

Under Executive Order 13084, we may not issue a regulation that is not required by statute, that significantly or uniquely affects the communities of Indian tribal governments, and that imposes substantial direct compliance costs on those communities, unless the Federal government provides the funds necessary to pay the direct compliance costs incurred by the tribal governments, or we consult with those governments. If we comply by consulting, Executive Order 13094 requires us to provide to the Office of Management and Budget, in a separately identified section of the preamble to the rule, a description of the extent of our prior consultation with representatives of affected tribal governments, a summary of the nature of their concerns, and a statement supporting the need to issue the regulation. In addition, Executive Order 13084 requires us to develop an effective process permitting elected and other representatives of Indian tribal governments ''to provide meaningful and timely input in the development of regulatory policies on matters that significantly or uniquely affect their communities.'' Today's rule does not significantly or uniquely affect the communities of Indian tribal governments. This rule only amends regulatory requirements that are already in effect and adds no additional requirements. Accordingly, the requirements of Section 3(b) of Executive Order 13084 do not apply to this rule.

H. Executive Order 13045: Protection of Children From Environmental Health Risks and Safety Risks

Executive Order 13045: ''Protection of Children from Environmental Health Risks and Safety Risks'' (62 FR 19885, April 23, 1997) applies to any rule that: (1) Is determined to be ''economically significant'' as defined under E.O. 12866, and (2) concerns an environmental health or safety risk that we have reason to believe may have a disproportionate effect on children. If the regulatory action meets both criteria, we must evaluate the environmental health or safety effects of the planned rule on children, and explain why the planned regulation is preferable to other potentially effective and reasonably feasible alternatives we considered.

We interpret E.O. 13045 as applying only to those regulatory actions that are based on health or safety risks, such that the analysis required under section 5–501 of the Order has the potential to influence the regulation. This rule is not subject to E.O. 13045 because it does not establish an environmental standard intended to mitigate health or safety risks.

I. Submission to Congress and the General Accounting Office

The Congressional Review Act, 5 U.S.C. 801, *et seq.*, as added by the Small Business Regulatory Enforcement Fairness Act of 1996, generally provides that before a rule may take effect, the agency promulgating the rule must submit a rule report, which includes a copy of the rule, to each House of the Congress and to the Comptroller General of the United States. We will submit a report containing this rule and other required information to the U.S. Senate, the U.S. House of Representatives, and the Comptroller General of the United States before it is published in the **Federal Register**. This action is not a ''major rule'' as defined by 5 U.S.C. 804(2). This rule will be effective October 17, 2000.

J. National Technology Transfer and Advancement Act

Section 12(d) of the National Technology Transfer and Advancement Act of 1995 (NTTAA), P.L. 104–113 (15 U.S.C. 272), directs us to use voluntary consensus standards (VCSs) in our regulatory activities unless to do so would be inconsistent with applicable law or otherwise impractical. Voluntary consensus standards are technical standards (*e.g.,* materials specifications, test methods, sampling procedures, business practices, etc.) that are developed or adopted by VCS bodies.

The NTTAA requires us to provide Congress, through OMB, explanations when we decide not to use available and applicable VCSs.

This rulemaking involves technical standards. Specifically, this rule makes technical corrections to portions of the subparts in Parts 60, 61, and 63 pertaining to source testing or monitoring of emissions and operations. The rule does not, however, change the nature of any of the technical standards currently in use. Moreover, many of the technical standards currently in use are VCSs developed by the American Society for Testing and Materials (ASTM). In fact, we have taken the opportunity presented by this rulemaking to update the references to the ASTM standards to include the dates of the most recent versions of these standards (see Section III.A. of the preamble for a full discussion). A complete list of the ASTM standards updated by this rule can be found in Part 60.17. Thus, today's action is consistent with our obligation to use VCSs in our regulatory activities whenever practicable.

Finally, we are promulgating PS–15, which identifies certification criteria for continuous emission monitoring systems (CEMS) using fourier transform infrared spectroscopy (FTIR). PS–15 is a performance specification that is being issued as an example procedure for use by industry and regulatory agencies as appropriate. While there are no underlying national EPA standards that will require the use of this procedure at this time, we conducted a search for VCS FTIR performance specifications and found none. We plan to periodically conduct rulemaking to make minor updates to test methods and performance specifications. In these rulemakings, we will review updates to VCS incorporated by reference and consider VCSs that may be used in lieu of EPA reference methods. We plan to provide the opportunity for public comment during these update rulemakings in part to allow VCS organizations to suggest where VCSs may be available for our use.

K. Plain Language in Government Writing

This rule is not written in the plain language format. In most cases, the rule corrects errors and makes updates to small portions of existing regulations that are not in plain language. The new plain language format was not used to keep the language of the amended sections consistent with that of the unamended rules. Also, the test methods were reformatted and proposed before the plain language provisions were mandated. Due to their volume, the time and costs associated with the magnitude of effort required to rewrite the final methods in plain language is prohibitive. However, this preamble is written in plain language, and we believe the amendments and reformatted test methods have been written clearly.

List of Subjects

40 CFR Part 60

Environmental protection, Administrative practice and procedure, Air pollution control, Continuous emission monitors, Incorporation by reference.

40 CFR Part 61

Environmental protection, Air pollution control, Incorporation by reference.

40 CFR Part 63

Environmental protection, Administrative practice and procedure, Air pollution control, Hazardous substances, Intergovernmental relations, Incorporation by reference, Reporting and recordkeeping requirements.

Dated: January 10, 2000.

Carol M. Browner,

Administrator.

For the reasons stated in the preamble, The Environmental Protection Agency amends title 40, chapter I of the Code of Federal Regulations as follows:

PART 60—STANDARDS OF PERFORMANCE FOR NEW STATIONARY SOURCES

1. The authority citation for part 60 continues to read as follows:

Authority: 42 U.S.C. 7401, 7411, 7413, 7414, 7416, 7601, and 7602.

§ 60.11 [Amended]

2. Amend § 60.11 by:

a. In paragraphs (b) and (e)(1), by revising the words ''Reference Method 9'' to read ''Method 9'' wherever they occur;

b. In paragraph (e)(5), revise the words ''to determine opacity compliance'' in the last sentence to read ''to determine compliance with the opacity standard.''

§ 60.13 [Amended]

3. Amend § 60.13 by:

a. Revising the last two sentences in paragraph (d)(1), revising paragraph (g), and revising the first sentence in paragraph (j)(2).

b. Revising the words ''ng/J of pollutant'' to read ''ng of pollutant per J of heat input'' in the sixth sentence of paragraph (h).

c. Revising the words ''with the effluent gases'' to read ''in the effluent gases'' in paragraph (i)(1).

d. Revising the words ''effluent from two or more affected facilities are released'' to read ''effluent from two or more affected facilities is released'' in paragraph (i)(9).

e. Revising the words ''relative accuracy test'' to read ''relative accuracy (RA) test'' in the paragraph (j) introductory text.

f. Revising the words ''relative accuracy'' to read ''RA'' in paragraphs (j)(1) and (2).

g. Revising the section references ''section 7'' and ''section 10'' to read ''Section 8.4'' and ''Section 16.0,'' respectively, in paragraphs (j)(1) and (2).

The revisions read as follows:

§ 60.13 Monitoring requirements.

* * * * *

(d) * * *

(1) * * * For continuous monitoring systems measuring opacity of emissions not using automatic zero adjustments, the optical surfaces exposed to the effluent gases shall be cleaned prior to performing the zero and span drift adjustments. For systems using automatic zero adjustments, the optical surfaces shall be cleaned when the cumulative automatic zero compensation exceeds 4 percent opacity.

* * * * *

(g)(1) When more than one continuous monitoring system is used to measure the emissions from only one affected facility (*e.g.,* multiple breechings, multiple outlets), the owner or operator shall report the results as required from each continuous monitoring system. When the effluent from one affected facility is released to the atmosphere through more than one point, the owner or operator shall install an applicable continuous monitoring system on each separate effluent unless installation of fewer systems is approved by the Administrator.

(2) When the effluents from two or more affected facilities subject to the same opacity standard are combined before being released to the atmosphere, the owner or operator may either install a continuous opacity monitoring system at a location monitoring the combined effluent or install an opacity combiner system comprised of opacity and flow monitoring systems on each stream, and shall report as per § 60.7(c) on the combined effluent. When the affected facilities are not subject to the same opacity standard, the owner or operator shall report the results as per § 60.7(c) on the combined effluent against the most stringent opacity standard

applicable, except for documented periods of shutdown of the affected facility, subject to the most stringent opacity standard. During such times, the next most stringent opacity standard shall apply.

(3) When the effluents from two or more affected facilities subject to the same emissions standard, other than opacity, are combined before being released to the atmosphere, the owner or operator may install applicable continuous emission monitoring systems on each effluent or on the combined effluent. The owner or operator may report the results as required for each affected facility or for the combined effluent. When the affected facilities are not subject to the same emissions standard, separate continuous emission monitoring systems shall be installed on each effluent and the owner or operator shall report as required for each affected facility.

* * * * *

(j) * * *

(2) The waiver of a CEMS RA test will be reviewed and may be rescinded at such time, following successful completion of the alternative RA procedure, that the CEMS data indicate that the source emissions are approaching the level. * * *

* * * * *

§ 60.14 [Amended]

4. In § 60.14, paragraph (b)(1) is amended by revising the words ''utilization of emission factors demonstrate'' to read ''utilization of emission factors demonstrates.''

§ 60.17 [Amended]

5. Amend § 60.17 by:

a. Revising paragraphs (a), (i), and (j).

b. In paragraph (b)(1), revise the words ''§§ 60.204(d)(2), 60.214(d)(2), 60.224(d)(2), 60.234(d)(2)'' to read ''§§ 60.204(b)(3), 60.214(b)(3), 60.224(b)(3), 60.234(b)(3).''

c. In paragraph (d), by revising the words ''IBR approved January 27, 1983 for § 60.285(d)(4)'' to read ''IBR approved January 27, 1983 for § 60.285(d)(3).''

The revisions read as follows:

§ 60.17 Incorporation by reference.

* * * * *

(a) The following materials are available for purchase from at least one of the following addresses: American Society for Testing and Materials (ASTM), 1916 Race Street, Philadelphia, PA 19103; or University Microfilms International, 300 North Zeeb Road, Ann Arbor, MI 48106.

(1) ASTM A99–76, 82 (Reapproved 1987), Standard Specification for Ferromanganese, incorporation by reference (IBR) approved January 27, 1983 for § 60.261.

(2) ASTM A100–69, 74, 93, Standard Specification for Ferrosilicon, IBR approved January 27, 1983 for § 60.261.

(3) ASTM A101–73, 93, Standard Specification for Ferrochromium, IBR approved January 27, 1983 for § 60.261.

(4) ASTM A482–76, 93, Standard Specification for Ferrochromesilicon, IBR approved January 27, 1983 for § 60.261.

(5) ASTM A483–64, 74 (Reapproved 1988), Standard Specification for Silicomanganese, IBR approved January 27, 1983 for § 60.261.

(6) ASTM A495–76, 94, Standard Specification for Calcium-Silicon and Calcium Manganese-Silicon, IBR approved January 27, 1983 for § 60.261.

(7) ASTM D86–78, 82, 90, 93, 95, 96, Distillation of Petroleum Products, IBR approved for §§ 60.562–2(d), 60.593(d), and 60.633(h).

(8) ASTM D129–64, 78, 95, Standard Test Method for Sulfur in Petroleum Products (General Bomb Method), IBR approved for Appendix A: Method 19, Section 12.5.2.2.3; and § 60.106(j)(2).

(9) ASTM D240–76, 92, Standard Test Method for Heat of Combustion of Liquid Hydrocarbon Fuels by Bomb Calorimeter, IBR approved January 27, 1983 for §§ 60.46(c), 60.296(b), and Appendix A: Method 19, Section 12.5.2.2.3.

(10) ASTM D270–65, 75, Standard Method of Sampling Petroleum and Petroleum Products, IBR approved January 27, 1983 for Appendix A: Method 19, Section 12.5.2.2.1.

(11) ASTM D323–82, 94, Test Method for Vapor Pressure of Petroleum Products (Reid Method), IBR approved April 8, 1987 for §§ 60.111(l), 60.111a(g), 60.111b(g), and 60.116b(f)(2)(ii).

(12) ASTM D388–77, 90, 91, 95, 98, 98a, Standard Specification for Classification of Coals by Rank, IBR approved for §§ 60.41(f), 60.45(f)(4)(i), 60.45(f)(4)(ii), 60.45(f)(4)(vi), 60.41a, 60.41b, and 60.251(b) and (c).

(13) ASTM D396–78, 89, 90, 92, 95, 96, 97, 98, Standard Specification for Fuel Oils, IBR approved for §§ 60.41b, 60.41c, 60.111(b), and 60.111a(b).

(14) ASTM D975–78, 96, 98, 98a, Standard Specification for Diesel Fuel Oils, IBR approved January 27, 1983 for §§ 60.111(b) and 60.111a(b).

(15) ASTM D1072–80, 90 (Reapproved 1994), Standard Method for Total Sulfur in Fuel Gases, IBR approved July 31, 1984 for § 60.335(d).

(16) ASTM D1137–53, 75, Standard Method for Analysis of Natural Gases and Related Types of Gaseous Mixtures by the Mass Spectrometer, IBR approved January 27, 1983 for § 60.45(f)(5)(i).

(17) ASTM D1193–77, 91, Standard Specification for Reagent Water, IBR approved for Appendix A: Method 5, Section 7.1.3; Method 5E, Section 7.2.1; Method 5F, Section 7.2.1; Method 6, Section 7.1.1; Method 7, Section 7.1.1; Method 7C, Section 7.1.1; Method 7D, Section 7.1.1; Method 10A, Section 7.1.1; Method 11, Section 7.1.3; Method 12, Section 7.1.3; Method 13A, Section 7.1.2; Method 26, Section 7.1.2; Method 26A, Section 7.1.2; and Method 29, Section 7.2.2.

(18) ASTM D1266–87, 91, 98, Standard Test Method for Sulfur in Petroleum Products (Lamp Method), IBR approved August 17, 1989 for § 60.106(j)(2).

(19) ASTM D1475–60, 80, 90, Standard Test Method for Density of Paint, Varnish Lacquer, and Related Products, IBR approved January 27, 1983 for § 60.435(d)(1), Appendix A: Method 24, Section 6.1; and Method 24A, Sections 6.5 and 7.1.

(20) ASTM D1552–83, 95, Standard Test Method for Sulfur in Petroleum Products (High Temperature Method), IBR approved for Appendix A: Method 19, Section 12.5.2.2.3; and § 60.106(j)(2).

(21) ASTM D1826–77, 94, Standard Test Method for Calorific Value of Gases in Natural Gas Range by Continuous Recording Calorimeter, IBR approved January 27, 1983 for §§ 60.45(f)(5)(ii), 60.46(c)(2), 60.296(b)(3), and Appendix A: Method 19, Section 12.3.2.4.

(22) ASTM D1835–82, 86, 87, 91, 97, Standard Specification for Liquefied Petroleum (LP) Gases, approved for §§ 60.41b and 60.41c.

(23) ASTM D1945–64, 76, 91, 96, Standard Method for Analysis of Natural Gas by Gas Chromatography, IBR approved January 27, 1983 for § 60.45(f)(5)(i).

(24) ASTM D1946–77, 90 (Reapproved 1994), Standard Method for Analysis of Reformed Gas by Gas Chromatography, IBR approved for §§ 60.45(f)(5)(i), 60.18(f)(3), 60.614(e)(2)(ii), 60.614(e)(4), 60.664(e)(2)(ii), 60.664(e)(4), 60.564(f)(1), 60.704(d)(2)(ii), and 60.704(d)(4).

(25) ASTM D2013–72, 86, Standard Method of Preparing Coal Samples for Analysis, IBR approved January 27, 1983, for Appendix A: Method 19, Section 12.5.2.1.3.

(26) ASTM D2015–77 (Reapproved 1978), 96, Standard Test Method for Gross Calorific Value of Solid Fuel by the Adiabatic Bomb Calorimeter, IBR

approved January 27, 1983 for § 60.45(f)(5)(ii), 60.46(c)(2), and Appendix A: Method 19, Section 12.5.2.1.3.

(27) ASTM D2016–74, 83, Standard Test Methods for Moisture Content of Wood, IBR approved for Appendix A: Method 28, Section 16.1.1.

(28) ASTM D2234–76, 96, 97a, 97b, 98, Standard Methods for Collection of a Gross Sample of Coal, IBR approved January 27, 1983 for Appendix A: Method 19, Section 12.5.2.1.1.

(29) ASTM D2369–81, 87, 90, 92, 93, 95, Standard Test Method for Volatile Content of Coatings, IBR approved January 27, 1983 for Appendix A: Method 24, Section 6.2.

(30) ASTM D2382–76, 88, Heat of Combustion of Hydrocarbon Fuels by Bomb Calorimeter (High-Precision Method), IBR approved for §§ 60.18(f)(3), 60.485(g)(6), 60.614(e)(4), 60.664(e)(4), 60.564(f)(3), and 60.704(d)(4).

(31) ASTM D2504–67, 77, 88 (Reapproved 1993), Noncondensable Gases in C_3 and Lighter Hydrocarbon Products by Gas Chromatography, IBR approved for § 60.485(g)(5).

(32) ASTM D2584–68 (Reapproved 1985), 94, Standard Test Method for Ignition Loss of Cured Reinforced Resins, IBR approved February 25, 1985 for § 60.685(c)(3)(i).

(33) ASTM D2622–87, 94, 98, Standard Test Method for Sulfur in Petroleum Products by X-Ray Spectrometry, IBR approved August 17, 1989 for § 60.106(j)(2).

(34) ASTM D2879–83, 96, 97, Test Method for Vapor Pressure-Temperature Relationship and Initial Decomposition Temperature of Liquids by Isoteniscope, IBR approved April 8, 1987 for §§ 60.485(e)(1), 60.111b(f)(3), 60.116b(e)(3)(ii), and 60.116b(f)(2)(i).

(35) ASTM D2880–78, 96, Standard Specification for Gas Turbine Fuel Oils, IBR approved January 27, 1983 for §§ 60.111(b), 60.111a(b), and 60.335(d).

(36) ASTM D2908–74, 91, Standard Practice for Measuring Volatile Organic Matter in Water by Aqueous-Injection Gas Chromatography, IBR approved for § 60.564(j).

(37) ASTM D2986–71, 78, 95a, Standard Method for Evaluation of Air, Assay Media by the Monodisperse DOP (Dioctyl Phthalate) Smoke Test, IBR approved January 27, 1983 for Appendix A: Method 5, Section 7.1.1; Method 12, Section 7.1.1; and Method 13A, Section 7.1.1.2.

(38) ASTM D3031–81, Standard Test Method for Total Sulfur in Natural Gas by Hydrogenation, IBR approved July 31, 1984 for § 60.335(d).

(39) ASTM D3173–73, 87, Standard Test Method for Moisture in the Analysis Sample of Coal and Coke, IBR approved January 27, 1983 for Appendix A: Method 19, Section 12.5.2.1.3.

(40) ASTM D3176–74, 89, Standard Method for Ultimate Analysis of Coal and Coke, IBR approved January 27, 1983 for § 60.45(f)(5)(i) and Appendix A: Method 19, Section 12.3.2.3.

(41) ASTM D3177–75, 89, Standard Test Method for Total Sulfur in the Analysis Sample of Coal and Coke, IBR approved January 27, 1983 for Appendix A: Method 19, Section 12.5.2.1.3.

(42) ASTM D3178–73 (Reapproved 1979), 89, Standard Test Methods for Carbon and Hydrogen in the Analysis Sample of Coal and Coke, IBR approved January 27, 1983 for § 60.45(f)(5)(i).

(43) ASTM D3246–81, 92, 96, Standard Method for Sulfur in Petroleum Gas by Oxidative Microcoulometry, IBR approved July 31, 1984 for § 60.335(d).

(44) ASTM D3270–73T, 80, 91, 95, Standard Test Methods for Analysis for Fluoride Content of the Atmosphere and Plant Tissues (Semiautomated Method), IBR approved for Appendix A: Method 13A, Section 16.1.

(45) ASTM D3286–85, 96, Standard Test Method for Gross Calorific Value of Coal and Coke by the Isoperibol Bomb Calorimeter, IBR approved for Appendix A: Method 19, Section 12.5.2.1.3.

(46) ASTM D3370–76, 95a, Standard Practices for Sampling Water, IBR approved for § 60.564(j).

(47) ASTM D3792–79, 91, Standard Method for Water Content of Water-Reducible Paints by Direct Injection into a Gas Chromatograph, IBR approved January 27, 1983 for Appendix A: Method 24, Section 6.3.

(48) ASTM D4017–81, 90, 96a, Standard Test Method for Water in Paints and Paint Materials by the Karl Fischer Titration Method, IBR approved January 27, 1983 for Appendix A: Method 24, Section 6.4.

(49) ASTM D4057–81, 95, Standard Practice for Manual Sampling of Petroleum and Petroleum Products, IBR approved for Appendix A: Method 19, Section 12.5.2.2.3.

(50) ASTM D4084–82, 94, Standard Method for Analysis of Hydrogen Sulfide in Gaseous Fuels (Lead Acetate Reaction Rate Method), IBR approved July 31, 1984 for § 60.335(d).

(51) ASTM D4177–95, Standard Practice for Automatic Sampling of Petroleum and Petroleum Products, IBR approved for Appendix A: Method 19, 12.5.2.2.1.

(52) ASTM D4239–85, 94, 97, Standard Test Methods for Sulfur in the Analysis Sample of Coal and Coke Using High Temperature Tube Furnace Combustion Methods, IBR approved for Appendix A: Method 19, Section 12.5.2.1.3.

(53) ASTM D4442–84, 92, Standard Test Methods for Direct Moisture Content Measurement in Wood and Wood-base Materials, IBR approved for Appendix A: Method 28, Section 16.1.1.

(54) ASTM D4444–92, Standard Test Methods for Use and Calibration of Hand-Held Moisture Meters, IBR approved for Appendix A: Method 28, Section 16.1.1.

(55) ASTM D4457–85 (Reapproved 1991), Test Method for Determination of Dichloromethane and 1, 1, 1-Trichloroethane in Paints and Coatings by Direct Injection into a Gas Chromatograph, IBR approved for Appendix A: Method 24, Section 6.5.

(56) ASTM D4809–95, Standard Test Method for Heat of Combustion of Liquid Hydrocarbon Fuels by Bomb Calorimeter (Precision Method), IBR approved for §§ 60.18(f)(3), 60.485(g)(6), 60.564(f)(3), 60.614(d)(4), 60.664(e)(4), and 60.704(d)(4).

(57) ASTM D5403–93, Standard Test Methods for Volatile Content of Radiation Curable Materials. IBR approved September 11, 1995 for Appendix A: Method 24, Section 6.6.

(58) ASTM D5865–98, Standard Test Method for Gross Calorific Value of Coal and Coke. IBR approved for § 60.45(f)(5)(ii), 60.46(c)(2), and Appendix A: Method 19, Section 12.5.2.1.3.

(59) ASTM E168–67, 77, 92, General Techniques of Infrared Quantitative Analysis, IBR approved for §§ 60.593(b)(2) and 60.632(f).

(60) ASTM E169–63, 77, 93, General Techniques of Ultraviolet Quantitative Analysis, IBR approved for §§ 60.593(b)(2) and 60.632(f).

(61) ASTM E260–73, 91, 96, General Gas Chromatography Procedures, IBR approved for §§ 60.593(b)(2) and 60.632(f).

* * * * *

(i) Test Methods for Evaluating Solid Waste, Physical/Chemical Methods,'' EPA Publication SW–846 Third Edition (November 1986), as amended by Updates I (July 1992), II (September 1994), IIA (August, 1993), IIB (January 1995), and III (December 1996). This document may be obtained from the U.S. EPA, Office of Solid Waste and Emergency Response, Waste Characterization Branch, Washington, DC 20460, and is incorporated by reference for Appendix A to Part 60,

Method 29, Sections 7.5.34; 9.2.1; 9.2.3; 10.2; 10.3; 11.1.1; 11.1.3; 13.2.1; 13.2.2; 13.3.1; and Table 29–3.

(j) ''Standard Methods for the Examination of Water and Wastewater,'' 16th edition, 1985. Method 303F: ''Determination of Mercury by the Cold Vapor Technique.'' This document may be obtained from the American Public Health Association, 1015 18th Street, NW., Washington, DC 20036, and is incorporated by reference for Appendix A to Part 60, Method 29, Sections 9.2.3; 10.3; and 11.1.3.

* * * * *

§ 60.18 [Amended]

6. Amend § 60.18 as follows:

a. In paragraph (f)(1), the first sentence is amended by revising ''Reference Method 22'' to read ''Method 22 of Appendix A to this part.''

b. In paragraph (f)(3), the definition of ''C_i'' is amended by revising ''ASTM D1946–77'' to read ''ASTM D1946–77 or 90 (Reapproved 1994).''

c. In paragraph (f)(3), the definition of ''H_i'' is amended by revising ''ASTM D2382–76'' to read ''ASTM D2382–76 or 88 or D4809–95.''

§ 60.41 [Amended]

7. In § 60.41, paragraph (f) is amended by revising the words ''the American Society and Testing and Materials, Designation D388–77'' to read ''ASTM D388–77, 90, 91, 95, or 98a.''

§ 60.42 [Amended]

8. In § 60.42, paragraphs (b)(1) and (b)(2), are amended by removing the symbol ''%'' wherever it appears, and adding ''percent'' in its place.

§ 60.45 [Amended]

9. Amend § 60.45 as follows:

a. In paragraph (b)(2) by removing the words ''under paragraph (d) of this section.''

b. In paragraphs (f)(4)(i), (f)(4)(ii), and (f)(4)(vi) by revising the words ''ASTM D388–77'' to read ''ASTM D388–77, 90, 91, 95, or 98a.''

c. In paragraph (f)(5)(i) by revising the words ''ASTM method D1137–53, (75), D1945–64(76), or D1946–77'' to read ''ASTM D1137–53 or 75, D1945–64, 76, 91, or 96 or D1946–77 or 90 (Reapproved 1994).''

d. In paragraph (f)(5)(i) by revising the words ''ASTM method D3178–74 or D3176'' to read ''ASTM D3178–73 (Reapproved 1979), 89, or D3176–74 or 89.''

e. In paragraph (f)(5)(ii) by revising the words ''ASTM D1826–77'' to read ''ASTM D1826–77 or 94.''

f. In paragraph (f)(5)(ii) by revising the words ''ASTM D2015–77'' to read ''ASTM D2015–77 (Reapproved 1978), 96, or D5865–98.''

§ 60.46 [Amended]

10. Amend § 60.46 as follows:

a. In paragraph (b)(2)(i), the second sentence is amended by revising the words ''in the sampling train may be set to provide a gas temperature no greater than'' to read ''in the sampling train shall be set to provide an average gas temperature of.''

b. In paragraph (b)(2)(ii), the third sentence is amended by revising the words ''the arithmetic mean of all the individual O_2 sample concentrations at each traverse point'' to read ''the arithmetic mean of the sample O_2 concentrations at all traverse points.''

c. Paragraph (c)(2) is amended by revising the words ''D2015–77'' to read ''D2015–77 (Reapproved 1978), 96, or D5865–98''.

d. Paragraph (c)(2) is further amended by revising the words ''D240–76'' to read ''D240–76 or 92.''

e. In paragraph (c)(2) is further amended by revising the words ''D1826–77'' to read ''D1826–77 or 94.''

§ 60.41a [Amended]

11. Amend § 60.41a as follows:

a. In the definitions for ''subbituminous coal'' and ''lignite,'' by revising ''D388–77'' to read ''D388–77, 90, 91, 95, or 98a.''

b. In paragraph (a)(2) of the definition of ''potential combustion concentration'' by revising ''75 ng/J'' to read ''73 ng/J.''

§ 60.43a [Amended]

12. In § 60.43a, paragraph (d)(2), revising the words ''resource recovery facility'' to read ''resource recovery unit.''

§ 60.47a [Amended]

13. Amend § 60.47a as follows:

a. In paragraph (b)(3) by removing the words ''(appendix A).''

b. In the first sentence of paragraph (g) by revising the words ''lbs/million Btu'' to read ''lb/million Btu.''

c. In the second sentence of paragraph (h)(3) by revising the words ''309 minutes in each hour'' to read ''30 minutes in each hour.''

d. In paragraph (i)(1) by revising the words ''6, 7, and 3B, as applicable, shall be used to determine O_2, SO_2, and NO_X concentrations'' to read ''3B, 6, and 7 shall be used to determine O_2, SO_2, and NO_X concentrations, respectively.''

§ 60.48a [Amended]

14. Amend § 60.48a as follows:

a. In paragraph (b)(2)(ii), in the fourth sentence by revising the words ''the arithmetic mean of all the individual O_2 concentrations at each traverse point.'' to read ''the arithmetic mean of the sample O_2 concentrations at all traverse points.''

b. In paragraph (c)(3), in the first sentence by adding a closing parenthesis after the abbreviation ''(%R_g'' so that it now reads ''(%R_g)''.

c. In paragraph (f), in the first and second sentences by removing the words ''(appendix A).''

§ 60.40b [Amended]

15. § 60.40b is amended by adding paragraph (j) as follows:

§ 60.40b Applicability and delegation of authority.

* * * * *

(j) Any affected facility meeting the applicability requirements under paragraph (a) of this section and commencing construction, modification, or reconstruction after June 19, 1986 is not subject to Subpart D (Standards of Performance for Fossil-Fuel-Fired Steam Generators, § 60.40).

* * * * *

§ 60.41b [Amended]

16. Amend § 60.41b as follows:

a. In the definition for ''coal'' by revising ''ASTM D388–77'' to read ''ASTM D388–77, 90, 91, 95, or 98a.''

b. In the definition for ''distillate oil'' by revising ''ASTM D396–78'' to read ''ASTM D396–78, 89, 90, 92, 96, or 98.''

c. In the definition for ''lignite'' by revising ''ASTM D388–77'' to read ''ASTM D388–77, 90, 91, 95, or 98a.''

d. In the definition for ''natural gas'' by revising ''ASTM D1835–82'' to read ''ASTM D1835–82, 86, 87, 91, or 97.''

§ 60.42b [Amended]

17. In § 60.42b, paragraph (d), the second sentence is amended by revising the words ''facilities under this paragraph'' to read ''facilities under paragraphs (d)(1), (2), or (3).''

§ 60.43b [Amended]

18. In § 60.43b, paragraph (a)(1) is amended by revising the words ''22 ng/J (0.05 lb/million Btu)'' to read ''22 ng/J (0.051 lb/million Btu).''

§ 60.46b [Amended]

19. Amend § 60.46b as follows:

a. In paragraph (d)(4) by revising the words ''160 °C (320 °F)'' to read ''160±14 °C (320±25 °F).''

b. In paragraph (d)(6)(iii) by removing the words ''(appendix A).''

§ 60.41c [Amended]

20. Amend § 60.41c as follows:

a. In the definition for ''natural gas'' by revising ''D1835–86'' to read ''D1835–86, 87, 91, or 97.''

b. In the definitions for ''distillate oil'' and ''residual oil'' by revising ''D396–78'' to read ''D396–78, 89, 90, 92, 96, or 98.''

§ 60.42c [Amended]

21. Amend § 60.42c as follows:

a. In paragraph (a), in the first sentence by revising the words ''the owner the operator'' to read ''the owner or operator.''

b. In paragraph (c), in the second sentence by revising the words ''facilities under this paragraph'' to read ''facilities under paragraphs (c)(1), (2), (3), or (4).''

§ 60.43c [Amended]

22. In § 60.43c, paragraph (a)(1) is amended by revising the words ''22 ng/J (0.05 lb/million Btu)'' to read ''22 ng/J (0.051 lb/million Btu).''

§ 60.44c [Amended]

23. In § 60.44c, paragraph (i), the third sentence is amended by revising the words ''24-hour averaged'' to read ''24-hour average.''

§ 60.45c [Amended]

24. Amend § 60.45c as follows:

a. Redesignate paragraphs (a)(5) through (a)(7) as paragraphs (a)(6) through (a)(8), respectively.

b. Revise paragraphs (a)(1) through (a)(4) and add paragraph (a)(5).

The redesignation, revisions and addition read as follows:

§ 60.45c Compliance and performance test methods and procedures for particulate matter.

(a) * * *

(1) Method 1 shall be used to select the sampling site and the number of traverse sampling points.

(2) Method 3 shall be used for gas analysis when applying Method 5, Method 5B, or Method 17.

(3) Method 5, Method 5B, or Method 17 shall be used to measure the concentration of PM as follows:

(i) Method 5 may be used only at affected facilities without wet scrubber systems.

(ii) Method 17 may be used at affected facilities with or without wet scrubber systems provided the stack gas temperature does not exceed a temperature of 160 °C (320 °F). The procedures of Sections 8.1 and 11.1 of Method 5B may be used in Method 17 only if Method 17 is used in conjunction with a wet scrubber system. Method 17 shall not be used in conjunction with a wet scrubber system if the effluent is saturated or laden with water droplets.

(iii) Method 5B may be used in conjunction with a wet scrubber system.

(4) The sampling time for each run shall be at least 120 minutes and the minimum sampling volume shall be 1.7 dry standard cubic meters (dscm) [60 dry standard cubic feet (dscf)] except that smaller sampling times or volumes may be approved by the Administrator when necessitated by process variables or other factors.

(5) For Method 5 or Method 5B, the temperature of the sample gas in the probe and filter holder shall be monitored and maintained at 160±14 °C (320±25 °F).

* * * * *

§ 60.46c [Amended]

25. In § 60.46c, paragraphs (b) and (d) are amended by revising the abbreviation ''CEM'' to read ''CEMS'' wherever it appears.

§ 60.47c [Amended]

26. In § 60.47c, paragraphs (a) and (b) are amended by revising the abbreviation ''CEMS'' to read ''COMS'' wherever it appears.

§ 60.48c [Amended]

27. In § 60.48c, paragraph (b) is amended by replacing the abbreviation ''CEMS'' with the words ''CEMS and/or COMS.''

§ 60.52 [Amended]

28. In § 60.52, paragraph (a) is amended by revising the words ''the performance test required to be conducted by § 60.8 is completed'' to read ''the initial performance test is completed or required to be completed under § 60.8 of this part, whichever date comes first.''

§ 60.54 [Amended]

29. Amend § 60.54 as follows:

a. In paragraph (b)(1) by revising the words ''The emission rate (c_{12})'' to read ''The concentration (c_{12}).''

b. In paragraph (b)(3)(i), in the third sentence by revising the words ''the arithmetic mean of all the individual CO_2 sample concentrations at each traverse point'' to read ''the arithmetic mean of the sample CO_2 concentrations at all traverse points.''

§ 60.51a [Amended]

30. Section 60.51a is amended by adding a new difinition in alphabetical order to read as follows:

§ 60.51a Definitions.

* * * * *

Continuous monitoring system means the total equipment used to sample and condition (if applicable), to analyze, and to provide a permanent record of emissions or process parameters.

* * * * *

§ 60.58a [Amended]

31. Amend § 60.58a as follows:

a. In paragraph (b)(3), in the first sentence by revising the words ''particulate matter emission standard'' to read ''particulate matter emission limit.''

b. In paragraph (b)(3), in the third sentence by revising the words ''a gas temperature no greater than'' to read ''a gas temperature of.''

c. In paragraph (b)(8) by revising the words ''operate a CEMS for measuring opacity'' to read ''operate a continuous opacity monitoring system (COMS).''

d. In paragraph (e)(10) by revising the word ''Section'' to read ''section.''

e. In paragraph (e)(14) by revising the words ''outlet to'' to read ''outlet of.''

f. In paragraph (f)(2) by revising the words ''Method 26'' to read ''Method 26 or 26A.''

§ 60.58b [Amended]

32–36. Amend § 60.58b as follows:

a. In paragraph (b)(1) by revising the words ''(or carbon dioxide)'' to read ''(or 20 percent carbon dioxide)'' each place it appears.

b. In paragraph (f)(1), in the second sentence by removing the words ''for Method 26.''

c. In paragraph (f)(2) by removing the words ''Method 26.''

§ 60.56c [Amended]

37. Amend § 60.56c as follows:

a. In paragraph (b)(4), in the first and second sentences by revising the words ''Method 3 or 3A'' to read ''Method 3, 3A, or 3B.''

b. In paragraph (b)(10), in the first sentence by revising the words ''Method 26'' to read ''Method 26 or 26A.''

§ 60.64 [Amended]

38. Amend § 60.64(b)(1) as follows:

a. In the definition of the term ''c_s'', ''(g/dscf)'' is revised to read ''(gr/dscf).''

b. In the definition of the term ''K'', ''(453.6 g/lb)'' is revised to read ''(7000 gr/lb).''

§ 60.84 [Amended]

39. Amend § 60.84 as follows:

a. In paragraph (d), in the third sentence by revising the words ''monitoring of'' to read ''monitoring systems for measuring.''

b. In paragraph (d), in the fourth sentence by revising the words ''this SO_2'' to read ''the SO_2.''

§ 60.102 [Amended]

40. In § 60.102, paragraph (a)(1) is amended by revising the words ''1.0 kg/

1000 kg (1.0 lb/1000 lb)'' to read ''1.0 kg/Mg (2.0 lb/ton).

§ 60.104 [Amended]

41. In § 60.104, paragraph (b)(2) is amended by revising the words ''9.8 kg/1,000 kg'' to read ''9.8 kg/Mg (20 lb/ton).''

§ 60.105 [Amended]

42. Amend § 60.105 by:

a. In paragraphs (a)(3)(iii) and (a)(5)(ii), the words ''Methods 6 and 3'' in the second sentence are revised to read ''Methods 6 or 6C and 3 or 3A.''

b. In paragraph (a)(4)(iii), the words ''Method 11 shall be used for conducting the relative accuracy evaluations'' are revised to read ''Method 11, 15, 15A, or 16 shall be used for conducting the relative accuracy evaluations.''

c. In paragraphs (a)(3)(i), (a)(5)(i), (a)(6)(i), and (a)(7)(i), ''10'' is revised to read ''25.''

d. In paragraph (a)(6)(ii), the first sentence and paragraphs (a)(8), (a)(9), and (a)(12) are revised.

e. In paragraph (a)(10), the abbreviation ''vppm'' is revised to read ''ppmv''.

f. In paragraph (c), ''(thousands of kilograms per hour)'' is revised to read ''(Mg (tons) per hour).''

g. In paragraph (d), the words ''(liters/hr or kg/hr)'' are removed.

The revisions read as follows:

§ 60.105 Monitoring of emissions and operations.

(a) * * *

(6) * * *

(ii) The performance evaluations for this reduced sulfur (and O_2) monitor under § 60.13(c) shall use Performance Specification 5 of Appendix B of this Part (and Performance Specification 3 of Appendix B of this Part for the O_2 analyzer). * * *

* * * * *

(8) An instrument for continuously monitoring and recording concentrations of SO_2 in the gases at both the inlet and outlet of the SO_2 control device from any fluid catalytic cracking unit catalyst regenerator for which the owner or operator seeks to comply with § 60.104 (b)(1).

(i) The span value of the inlet monitor shall be set 125 percent of the maximum estimated hourly potential SO_2 emission concentration entering the control device, and the span value of the outlet monitor shall be set at 50 percent of the maximum estimated hourly potential sulfur dioxide emission concentration entering the control device.

(ii) The performance evaluations for these SO_2 monitors under § 60.13(c) shall use Performance Specification 2. Methods 6 or 6C and 3 or 3A shall be used for conducting the relative accuracy evaluations.

(9) An instrument for continuously monitoring and recording concentrations of SO_2 in the gases discharged into the atmosphere from any fluid catalytic cracking unit catalyst regenerator for which the owner or operator seeks to comply specifically with the 50 ppmv emission limit under § 60.104 (b)(1).

(i) The span value of the monitor shall be set at 50 percent of the maximum hourly potential SO_2 emission concentration of the control device.

(ii) The performance evaluations for this SO_2 monitor under § 60.13 (c) shall use Performance Specification 2. Methods 6 or 6C and 3 or 3A shall be used for conducting the relative accuracy evaluations.

* * * * *

(12) The owner or operator shall use the following procedures to evaluate the continuous monitoring systems under paragraphs (a)(8), (a)(9), and (a)(10) of this section.

(i) Method 3 or 3A and Method 6 or 6C for the relative accuracy evaluations under the § 60.13(e) performance evaluation.

(ii) Appendix F, Procedure 1, including quarterly accuracy determinations and daily calibration drift tests.

* * * * *

§ 60.106 [Amended]

43. Amend § 60.106 by:

a. In paragraphs (b)(1), (b)(3), (c)(1), (i)(9) by revising the equations and definitions.

b. In paragraph (b)(3)(ii) by revising the words ''Method 3'' to read ''Method 3B.''

c. Revising paragraph (e).

d. Revising paragraph (f)(1).

e. In paragraph (f)(3) by revising the words ''Method 3'' to read ''Method 3 or 3A'' and by revising ''(h)(3)'' to read ''(h)(6).''

d. In paragraph (g), in the first sentence by revising the words ''the applicable test methods and procedures specified in this section'' to read ''Method 6 or 6C and Method 3 or 3A.''

e. In paragraphs (h)(1), (h)(3), and (h)(4) by revising the abbreviation ''vppm'' to read ''ppmv'' wherever it occurs.

f. In paragraph (i)(2)(i) by revising the words ''for the concentration of sulfur oxides calculated as sulfur dioxide and moisture content'' to read ''for moisture content and for the concentration of sulfur oxides calculated as sulfur dioxide.''

g. Revising paragraph (i)(9) following the introductory text and paragraph (i)(10).

h. In paragraph (i)(11) by revising the words ''per 1,000 kg of coke burn-off'' to read ''per Mg (ton) of coke burn-off.''

i. In paragraph (j)(2) by revising the words ''ASTM D129–64 (Reapproved 1978)'' to read ''ASTM D129–64, 78, or 95.''

j. In paragraph (j)(2) by revising the words ''ASTM D1552–83'' to read ''ASTM D1552–83 or 95.''

k. In paragraph (j)(2) by revising the words ''ASTM D2622–87'' to read ''ASTM D2622–87, 94, or 98.''

l. In paragraph (j)(2) by revising the words ''ASTM D1266–87'' to read ''ASTM D1266–87, 91, or 98.''

The revisions read as follows:

§ 60.106 Test methods and procedures.

* * * * *

(b) * * *

(1) * * *

$$E = \frac{c_s Q_{sd}}{K R_c}$$

Where:

E = Emission rate of PM, kg/Mg (lb/ton) of coke burn-off.

c_s = Concentration of PM, g/dscm (gr/dscf).

Q_{sd} = Volumetric flow rate of effluent gas, dscm/hr (dscf/hr).

R_c = Coke burn-off rate, Mg/hr (ton/hr) coke.

K=Conversion factor, 1,000 g/kg (7,000 gr/lb).

* * * * *

(3) * * *

$$R_c = K_1 Q_r (\%CO_2 + \%CO) - (K_2 Q_a - K_3 Q_r)((\%CO/2) + (\%CO_2 + \%O_2))$$

Where:

R_c = Coke burn-off rate, Mg/hr (ton/hr).

Q_r = Volumetric flow rate of exhaust gas from catalyst regenerator before entering the emission control system, dscm/min (dscf/min).

Q_a = Volumetric flow rate of air to FCCU regenerator, as determined from the fluid catalytic cracking unit control room instrumentation, dscm/min (dscf/min).

$\%CO_2$ = Carbon dioxide concentration, percent by volume (dry basis).

%CO = Carbon monoxide concentration, percent by volume (dry basis).

$\%O_2$ = Oxygen concentration, percent by volume (dry basis).

K_1 = Material balance and conversion factor, 2.982×10^{-4} (Mg-min)/(hr-dscm-%) [9.31×10^{-6} (ton-min)/(hr-dscf-%)].

K_2 = Material balance and conversion factor, 2.088×10^{-3} (Mg-min)/(hr-dscm-%) [6.52×10^{-5} (ton-min)/(hr-dscf-%)].

K_3 = Material balance and conversion factor, 9.94×10^{-5} (Mg-min)/(hr-dscm-%) [3.1×10^{-6} (ton-min)/(hr-dscf-%)].

* * * * *

(c) * * *

(1) * * *

$$E_s = F + A\left(H/R_c\right)$$

Where:

E_s = Emission rate of PM allowed, kg/Mg (lb/ton) of coke burn-off in catalyst regenerator.

F=Emission standard, 1.0 kg/Mg (2.0 lb/ton) of coke burn-off in catalyst regenerator.

A = Allowable incremental rate of PM emissions, 7.5×10^{-4} kg/million J (0.10 lb/million Btu).

H = Heat input rate from solid or liquid fossil fuel, million J/hr (million Btu/hr).

R_c = Coke burn-off rate, Mg coke/hr (ton coke/hr).

* * * * *

(e)(1) The owner or operator shall determine compliance with the H_2S standard in § 60.104(a)(1) as follows: Method 11, 15, 15A, or 16 shall be used to determine the H_2S concentration. The gases entering the sampling train should be at about atmospheric pressure. If the pressure in the refinery fuel gas lines is relatively high, a flow control valve may be used to reduce the pressure. If the line pressure is high enough to operate the sampling train without a vacuum pump, the pump may be eliminated from the sampling train. The sample shall be drawn from a point near the centroid of the fuel gas line.

(i) For Method 11, the sampling time and sample volume shall be at least 10 minutes and 0.010 dscm (0.35 dscf). Two samples of equal sampling times shall be taken at about 1-hour intervals. The arithmetic average of these two samples shall constitute a run. For most fuel gases, sampling times exceeding 20 minutes may result in depletion of the collection solution, although fuel gases containing low concentrations of H_2S may necessitate sampling for longer periods of time.

(ii) For Method 15 or 16, at least three injects over a 1-hour period shall constitute a run.

(iii) For Method 15A, a 1-hour sample shall constitute a run.

(2) Where emissions are monitored by § 60.105(a)(3), compliance with § 60.105(a)(1) shall be determined using Method 6 or 6C and Method 3 or 3A. A 1-hour sample shall constitute a run. Method 6 samples shall be taken at a rate of approximately 2 liters/min. The ppm correction factor (Method 6) and the sampling location in paragraph (f)(1) of this section apply. Method 4 shall be used to determine the moisture content of the gases. The sampling point for Method 4 shall be adjacent to the sampling point for Method 6 or 6C.

(f) * * *

(1) Method 6 shall be used to determine the SO_2 concentration. The concentration in mg/dscm obtained by Method 6 or 6C is multiplied by 0.3754 to obtain the concentration in ppm. The sampling point in the duct shall be the centroid of the cross section if the cross-sectional area is less than 5.00 m^2 (53.8 ft^2) or at a point no closer to the walls than 1.00 m (39.4 in.) if the cross-sectional area is 5.00 m^2 or more and the centroid is more than 1 m from the wall. The sampling time and sample volume shall be at least 10 minutes and 0.010 dscm (0.35 dscf) for each sample. Eight samples of equal sampling times shall be taken at about 30-minute intervals. The arithmetic average of these eight samples shall constitute a run. For Method 6C, a run shall consist of the arithmetic average of four 1-hour samples. Method 4 shall be used to determine the moisture content of the gases. The sampling point for Method 4 shall be adjacent to the sampling point for Method 6 or 6C. The sampling time for each sample shall be equal to the time it takes for two Method 6 samples. The moisture content from this sample shall be used to correct the corresponding Method 6 samples for moisture. For documenting the oxidation efficiency of the control device for reduced sulfur compounds, Method 15 shall be used following the procedures of paragraph (f)(2) of this section.

* * * * *

(i) * * *

(9) * * *

$$E_{so_x} = C_{so_x} Q_{sd}/K$$

Where:

E_{SOx} = sulfur oxides emission rate calculated as sulfur dioxide, kg/hr (lb/hr)

C_{SOx} = sulfur oxides emission concentration calculated as sulfur dioxide, g/dscm (gr/dscf)

Q_{sd} = dry volumetric stack gas flow rate corrected to standard conditions, dscm/hr (dscf/hr)

K=1,000 g/kg (7,000 gr/lb)

(10) Sulfur oxides emissions calculated as sulfur dioxide shall be determined for each test run by the following equation:

$$R_{so_x} = \left(E_{so_x}/R_c\right)$$

Where:

R_{SOx} = Sulfur oxides emissions calculated as kg sulfur dioxide per Mg (lb/ton) coke burn-off.

E_{SOx} = Sulfur oxides emission rate calculated as sulfur dioxide, kg/hr (lb/hr).

R_c = Coke burn-off rate, Mg/hr (ton/hr).

* * * * *

§ 60.107 [Amended]

44. Section 60.107 is amended by revising paragraphs (c)(5) and (c)(6) as follows:

§ 60.107 Reporting and recordkeeping requirements.

* * * * *

(c) * * *

(5) If subject to § 60.104(b)(2), for each day in which a Method 8 sample result required by § 60.106(i) was not obtained, the date for which and brief explanation as to why a Method 8 sample result was not obtained, for approval by the Administrator.

(6) If subject to § 60.104(b)(3), for each 8-hour period in which a feed sulfur measurement required by § 60.106(j) was not obtained, the date for which and brief explanation as to why a feed sulfur measurement was not obtained, for approval by the Administrator.

* * * * *

§ 60.111 [Amended]

45. Section 60.111 is amended as follows:

a. In paragraph (b) by revising ''ASTM D396–78'' to read ''ASTM D396–78, 89, 90, 92, 96, or 98.''

b. In paragraph (b) by revising ''ASTM D2880–78'' to read ''ASTM D2880–78 or 96.''

c. In paragraph (b) by revising ''ASTM D975–78'' to read ''ASTM D975–78, 96, or 98a.''

d. In paragraph (l) by revising ''ASTM D323–82'' to read ''ASTM D323–82 or 94.''

§ 60.111a [Amended]

46. Section 60.111a is amended as follows:

a. In paragraph (b) by revising ''ASTM D396–78'' to read ''D396–78, 89, 90, 92, 96, or 98.''

b. In paragraph (b) by revising ''ASTM D2880–78'' to read ''ASTM D2880–78 or 96''; and by revising ''ASTM D975–78'' to read ''ASTM D975–78, 96, or 98a.''

c. In paragraph (g) by revising ''ASTM D323–82'' to read ''ASTM D323–82 or 94.''

§ 60.111b [Amended]

47. Section 60.111b is amended as follows:

a. In paragraph (f)(3) by revising ''ASTM Method D2879–83'' to read ''ASTM D2879–83, 96, or 97.''

b. In paragraph (g) by revising ''ASTM D323–82'' to read ''ASTM D323–82 or 94.''

§ 60.116b [Amended]

48. Section 60.116b is amended as follows:

a. In paragraph (e)(3)(ii) by revising ''ASTM Method D2879–83'' to read ''ASTM D2879–83, 96, or 97.''

b. In paragraph (f)(2)(i) by revising ''ASTM Method D2879–83'' to read ''ASTM D2879–83, 96, or 97.''

c. In paragraph (f)(2)(ii) by revising ''ASTM Method D323–82'' to read ''ASTM D323–82 or 94.''

§ 60.121 [Amended]

49. In § 60.121, paragraph (d) is added as follows:

§ 60.121 Definitions.

* * * * *

(d) *Blast furnace* means any furnace used to recover metal from slag.

* * * * *

§ 60.133 [Amended]

50. In § 60.133, paragraph (b)(1), the first sentence is amended by revising the words ''pouring of the heat'' to read ''pouring of part of the production cycle.''

§ 60.144 [Amended]

51. In § 60.144, paragraph (c) is revised to read as follows:

§ 60.144 Test methods and procedures.

* * * * *

(c) The owner or operator shall use the monitoring devices of § 60.143(b)(1) and (2) for the duration of the particulate matter runs. The arithmetic average of all measurements taken during these runs shall be used to determine compliance with § 60.143(c).

* * * * *

§ 60.143a [Amended]

52. Amend § 60.143a, paragraph (c) as follows:

a. The words ''All monitoring devices'' in the first sentence are revised to read ''All monitoring devices required by paragraph (a) of this section.''

b. The words ''EPA Reference Method 2'' in the first sentence are revised to read ''Method 2 of Appendix A of this part.''

c. The words ''EPA Reference Method 2'' in the second sentence are revised to read ''Method 2.''

§ 60.144a [Amended]

53. In § 60.144a, paragraph (d) is amended by revising it to read as follows:

§ 60.144a Test methods and procedures.

* * * * *

(d) To comply with § 60.143a(d) or (e), the owner or operator shall use the monitoring device of § 60.143a(a) to determine the exhaust ventilation rates or levels during the particulate matter runs. Each owner or operator shall then use these rates or levels to determine the 3-hour averages required by § 60.143a(d) and (e).

* * * * *

§ 60.145a [Amended]

54. In § 60.145a, paragraph (f), in the first sentence by revising the words ''Reference Method 5'' to read ''Method 5.''

§ 60.153 [Amended]

55. Amend § 60.153 as follows:

a. In paragraph (b)(3) by revising the word ''thermocouple'' or ''thermocouples'' to read ''temperature measuring device'' or ''temperature measuring devices'' wherever it occurs.

b. In paragraph (b)(5), in the second sentence by revising the words ''with the method specified under § 60.154(c)(2)'' to read ''with the method specified under § 60.154(b)(5).''

§ 60.154 [Amended]

56. In § 60.154, paragraphs (b)(1) and (b)(3) are revised, and in paragraph (b)(4), the equations and definitions are revised as follows:

§ 60.154 Test methods and procedures.

* * * * *

(b) * * *

(1) The emission rate (E) of particulate matter for each run shall be computed using the following equation:

$$E = \frac{c_s Q_{sd}}{KS}$$

Where:

E = Emission rate of particulate matter, g/kg (lb/ton) of dry sludge input.

c_s = Concentration of particulate matter, g/dscm (gr/dscf).

Q_{sd} = Volumetric flow rate of effluent gas, dscm/hr (dscf/hr).

S = Charging rate of dry sludge during the run, kg/hr (ton/hr).

K = Conversion factor, 1.0 g/g (7,000 gr/lb).

* * * * *

(3) The dry sludge charging rate (S) for each run shall be computed using either of the following equations:

$$S = S_m R_{dm}/\Theta$$

$$S = S_v R_{dv}/K_v \Theta$$

Where:

S = Charging rate of dry sludge, kg/hr (ton/hr).

S_m = Total mass of sludge charge, kg (ton).

R_{dm} = Average mass of dry sludge per unit mass of sludge charged, kg/kg (ton/ton).

θ = Duration of run, hr.

S_v = Total volume of sludge charged, m^3 (gal).

R_{dv} = Average mass of dry sludge per unit volume of sludge charged, kg/m^3 (lb/gal).

K_v = Conversion factor, 1 g/g (2,000 lb/ton).

(4) * * *

$$S_m = \sum_{i=1}^{n} Q/_{mi}\theta_i$$

$$S_v = \sum_{i=1}^{n} \frac{Q_{vi}}{\theta_i}$$

Where:

S_m = Total mass of sludge charged to the incinerator during the test run.

S_v = Total volume of sludge charged to the incinerator during the test run.

Q_{mi} = Average mass flow rate calculated by averaging the flow rates at the beginning and end of each interval ''i,'' kg/hr (ton/hr).

Q_{vi} = Average volume flow rate calculated by averaging the flow rates at the beginning and end of each interval ''i,'' m^3/hr (gal/hr).

θ_i = Duration of interval ''i,'' hr.

* * * * *

57. Paragraph (b)(5)(iii) is amended by revising the words ''mg/liter (lb/ft^3) or mg/mg (lb/lb)'' to read ''kg/m^3 (lb/gal) or kg/kg (ton/ton).''

§ 60.165 [Amended]

58. In § 60.165, paragraph (d)(2) is amended by revising the words

''installed under § 60.163'' to read ''installed under paragraph (b) of this section.''

§ 60.192 [Amended]

59. In § 60.192, paragraph (a) is amended by revising the words ''according to § 60.8 above'' to read ''according to § 60.195.''

§ 60.195 [Amended]

60. Amend § 60.195 as follows:

a. In paragraph (b)(1) by revising the words ''(mg/dscf)'' in the definition of the term ''c_s'' to read ''(gr/dscf)''; and revising the words ''(453,600 mg/lb)'' in the definition of the term ''K'' to read ''(7,000 gr/lb).''

b. In paragraph (b)(2) by revising the words ''(mg/dscf)'' in the definition of the symbol ''c_s'' to read ''(gr/dscf)''; and revising the words ''(453,600 mg/lb)'' in the definition of the symbol ''K'' to read ''(7,000 gr/lb).''

§ 60.201 [Amended]

61. In § 60.201 by revising paragraph (c) to read as follows:

§ 60.201 Definitions.

* * * * *

(c) *Equivalent P_2O_5 feed* means the quantity of phosphorus, expressed as phosphorus pentoxide, fed to the process.

* * * * *

§ 60.202 [Amended]

62. In § 60.202, paragraph (a) is amended by revising the words ''metric ton'' to read ''Mg.''

§ 60.203 [Amended]

63. In § 60.203, paragraph (b) is amended by revising the words ''metric ton'' to read ''Mg.''

§ 60.204 [Amended]

64. Amend § 60.204 as follows:

a. In paragraph (b)(1) by revising the words ''metric ton'' in the definition of the term ''E'' to read ''Mg''; revising the words ''(mg/dscf)'' in the definition of the term ''c_{si}'' to read ''(gr/dscf)''; revising the words ''metric ton'' in the definition of the term ''P'' to read ''Mg''; and revising the words ''(453,600 mg/lb)'' in the definition of the term ''K'' to read ''(7,000 gr/lb).''

b. In paragraph (b)(3) by revising the words ''metric ton'' in the definition of the term ''M_p'' to read ''Mg.''

§ 60.211 [Amended]

65. In § 60.211 by revising paragraph (c) to read as follows:

§ 60.211 Definitions.

* * * * *

(c) *Equivalent P_2O_5 feed* means the quantity of phosphorus, expressed as phosphorus pentoxide, fed to the process.

* * * * *

§ 60.212 [Amended]

66. In § 60.212, paragraph (a) is amended by revising the words ''metric ton'' to read ''megagram (Mg).''

§ 60.213 [Amended]

67. In § 60.213, paragraph (b) is amended by revising the words ''metric ton'' to read ''Mg.''

§ 60.214 [Amended]

68. Amend § 60.214 as follows:

a. In paragraph (b)(1) by revising the words ''metric ton'' in the definition of the term ''E'' to read ''Mg''; revising the words ''(mg/dscf)'' in the definition of the term ''c_{si}'' to read ''(gr/dscf)''; revising the words ''metric ton'' in the definition of the term ''P'' to read ''Mg''; and revising the words ''(453,600 mg/lb)'' in the definition of the term ''K'' to read ''(7,000 gr/lb).''

b. In paragraph (b)(3) by revising the words ''metric ton'' in the definition of the term ''M_p'' to read ''Mg.''

§ 60.222 [Amended]

69. In § 60.222, paragraph (a) is amended by revising the words ''metric ton'' to read ''megagram (Mg).''

§ 60.223 [Amended]

70. Amend § 60.223 as follows:

a. In paragraph (b) by revising the words ''metric ton'' to read ''Mg.''

b. In paragraph (c), in the first sentence by revising the word ''part'' to read ''subpart.''

§ 60.224 [Amended]

71. Amend § 60.224 as follows:

a. In paragraph (b)(1) by revising the words ''metric ton'' in the definition of the term ''E'' to read ''Mg''; revising the words ''(mg/dscf)'' in the definition of the term ''c_{si}'' to read ''(gr/dscf)''; revising the words ''metric ton'' in the definition of the term ''P'' to read ''Mg''; and revising the words ''(453,600 mg/lb)'' in the definition of the term ''K'' to read ''(7,000 gr/lb).''

b. In paragraph (b)(3) by revising the words ''metric ton'' in the definition of the term ''M_p'' to read ''Mg.''

§ 60.232 [Amended]

72. § 60.232 is amended by removing the paragraph designation and by revising the words ''metric ton'' to read ''megagram (Mg).''

§ 60.233 [Amended]

73. § 60.233 is amended by removing the paragraph designation and by revising the words ''metric ton'' to read ''Mg.''

§ 60.234 [Amended]

74. Amend § 60.234 as follows:

a. In paragraph (b)(1) by revising the words ''metric ton'' in the definition of the term ''E'' to read ''Mg''; revising the words ''(mg/dscf)'' in the definition of the term ''c_{si}'' to read ''(gr/dscf)''; revising the words ''metric ton'' in the definition of the term ''P'' to read ''Mg''; and revising the words ''(453,600 mg/lb)'' in the definition of the term ''K'' to read ''(7,000 gr/lb).''

b. In paragraph (b)(3) by revising the words ''metric ton'' in the definition of the term ''M_p'' to read ''Mg.''

§ 60.241 [Amended]

75. In § 60.241, paragraph (c) is amended by italicizing the word ''stored.''

§ 60.242 [Amended]

76–77. In § 60.242, paragraph (a) is amended by revising the words ''metric ton'' to read ''megagram (Mg).''

§ 60.244 [Amended]

78. Amend § 60.244 as follows:

a. In paragraph (c)(1) by revising the words ''metric ton'' in the definition of the term ''E'' to read ''Mg''; revising the words ''(mg/dscf)'' in the definition of the term ''c_{si}'' to read ''(gr/dscf)''; revising the words ''metric ton'' the words ''(453,600 mg/lb)'' in the definition of the term ''K'' to read ''(7,000 gr/lb).''

b. In paragraph (b)(3) by revising the words ''metric ton'' in the definition of the term ''M_p''to read ''Mg.''

§ 60.250 [Amended]

79. In § 60.250, paragraph (a) is amended by revising the words ''200 tons'' to read ''181 Mg (200 tons).''

§ 60.251 [Amended]

80. In § 60.251, paragraphs (b) and (c) are amended by revising ''D388–77'' to read ''D388–77, 90, 91, 95, or 98a.''

§ 60.252 [Amended]

81. In § 60.252, paragraph (b)(1) is amended by revising the words ''0.040 g/dscm (0.018 gr/dscf)'' to read ''0.040 g/dscm (0.017 gr/dscf).''

§ 60.253 [Amended]

82. Amend § 60.253 as follows:

a. In paragraph (a)(1), the second sentence is amended by revising the words ''±3° Fahrenheit'' to read ''±1.7 °C (±3 °F).''

b. In paragraph (a)(2)(i), the second sentence is amended by revising the word ''gage'' to read ''gauge.''

§ 60.261 [Amended]

83. Amend § 60.261 as follows:

a. Paragraph (n) is amended by revising ''ASTM Designation A99–76'' to read ''ASTM Designation A99–76 or 82 (Reapproved 1987).''

b. Paragraphs (s) and (w) are amended by revising ''ASTM Designation A100–69 (Reapproved 1974)'' to read ''ASTM Designation A100–69, 74, or 93.''

c. Paragraph (q) is amended by revising ''ASTM Designation A101–73'' to read ''ASTM Designation A101–73 or 93.''

d. Paragraph (t) is amended by revising ''ASTM Designation A482–76'' to read ''ASTM Designation A482–76 or 93.''

e. Paragraph (o) is amended by revising ''ASTM Designation A483–64 (Reapproved 1974)'' to read ''ASTM Designation A483–64 or 74 (Reapproved 1988).''

f. Paragraph (v) is amended by revising ''ASTM Designation A495–76'' to read ''ASTM Designation A495–76 or 94.''

§ 60.266 [Amended]

84. Amend § 60.266 as follows:

a. Paragraph (c)(1) is amended by revising the words ''emissions is quantified'' in the definition of the term ''n'' to read ''emissions are quantified''; revising the words ''(g/dscf)'' in the definition of the term ''c_{si}'' to read ''(gr/dscf)''; and revising the words ''(453.6 g/lb)'' in the definition of the term ''K'' to read ''(7000 gr/lb).''

b. Paragraph (c)(2)(ii) is amended by revising the words ''5.70 dscm (200 dscf)'' to read ''5.66 dscm (200 dscf).''

§ 60.274 [Amended]

85. Amend § 60.274 as follows:

a–b. Paragraph (a)(4) is amended by revising the words ''under paragraph (e) of this section'' to read ''under paragraph (f) of this section.''

c. In § 60.274, paragraph (i), the first sentence is amended by revising the words ''required by § 60.275(c)'' to read ''required by § 60.276(c).''

d. In § 60.274, by revising paragraph (i)(4) to read as follows:

§ 60.274 Monitoring of operations.

* * * * *

(i) * * *

(4) Continuous opacity monitor or Method 9 data.

* * * * *

§ 60.275 [Amended]

86. Amend § 60.275 as follows:

a. Paragraph (e)(2) is amended by revising the words ''more then one control'' to read ''more than one control.''

b. Paragraph (e)(4) is amended by revising the words ''the test runs shall be conducted concurrently'' to read ''the Method 9 test runs shall be conducted concurrently with the particulate matter test runs.''

c. In paragraph (i), the fifth sentence is amended by revising the words ''In the case, Reference Method 9'' to read ''In this case, Method 9.''

§ 60.276 [Amended]

87. Amend § 60.276 by:

a. Paragraphs (a) and (c)(6)(iv) are revised.

b. In paragraph (b), the second sentence is amended by revising the words ''postmarked 30 days prior'' to read ''postmarked at least 30 days prior.''

The revisions read as follows:

§ 60.276 Recordkeeping and reporing requirements.

(a) Operation at a furnace static pressure that exceeds the value established under § 60.274(g) and either operation of control system fan motor amperes at values exceeding ±15 percent of the value established under § 60.274(c) or operation at flow rates lower than those established under § 60.274(c) may be considered by the Administrator to be unacceptable operation and maintenance of the affected facility. Operation at such values shall be reported to the Administrator semiannually.

* * * * *

(c) * * *

(6) * * *

(iv) Continuous opacity monitor or Method 9 data.

* * * * *

§ 60.274a [Amended]

88. Amend § 60.274a by:

a. In paragraph (c), the first sentence is revised, and paragraph (h)(4) is revised.

b. Paragraph (f) is amended by adding the following sentence after the first sentence: ''The pressure shall be recorded as 15-minute integrated averages.''

c. In paragraph (h), the first sentence is amended by revising the words ''required by § 60.275a(d)'' to read ''required by § 60.276a(f).''

The revisions read as follows:

§ 60.274a Monitoring of operations.

* * * * *

(c) When the owner or operator of an EAF is required to demonstrate compliance with the standards under § 60.272a(a)(3), and at any other time that the Administrator may require (under section 114 of the Act, as amended), either the control system fan motor amperes and all damper positions or the volumetric flow rate through each separately ducted hood shall be determined during all periods in which a hood is operated for the purpose of capturing emissions from the affected facility subject to paragraph (b)(1) or (b)(2) of this section. * * *

* * * * *

(h) * * *

(4) Continuous opacity monitor or Method 9 data.

* * * * *

§ 60.275a [Amended]

89. In § 60.275a, paragraph (e)(4) is amended by revising the words ''the test runs shall be conducted concurrently'' to read ''the Method 9 test runs shall be conducted concurrently with the particulate matter test runs.''

§ 60.276a [Amended]

90. Amend § 60.276a as follows:

a. In paragraph (e), the second sentence is amended by revising the words ''postmarked 30 days prior'' to read ''postmarked at least 30 days prior.''

b. Paragraph (f)(6)(iv) is amended by revising as follows:

§ 60.276a Recordkeeping and reporting requirements.

* * * * *

(f) * * *

(iv) Continuous opacity monitor or Method 9 data.

* * * * *

§ 60.281 [Amended]

91. Amend § 60.281 as follows:

a. In paragraph (c) by revising the words ''Reference Method 16'' to read ''Method 16.''

b. In paragraph (d) by revising the words ''below tank(s)'' to read ''blow tank(s).''

c. In paragraph (e) by revising the words ''digestion system'' to read ''digester system.''

§ 60.282 [Amended]

92. In § 60.282, paragraph (a)(3)(i) is amended by revising the words ''0.15 g/dscm (0.067 gr/dscf)'' to read ''0.15 g/dscm (0.066 gr/dscf).''

§ 60.283 [Amended]

93. Amend § 60.283 as follows:

a. In paragraph (a)(1)(iii) by revising the words ''1200°F.'' to read ''650 °C (1200 °F).''

b. In paragraph (a)(1)(v), in the second sentence by revising the words ''5 ppm by volume on a dry basis, corrected to the actual oxygen content of the untreated gas stream'' to read ''5 ppm by volume on a dry basis, uncorrected for oxygen content.''

c. In paragraph (a)(1)(vi) by revising the words ''0.005 g/kg ADP'' to read ''0.005 g/kg air dried pulp (ADP).''

§ 60.284 [Amended]

94. Amend § 60.284 by:

a. In paragraph (a)(2)(ii) by revising the words ''20 percent'' to read ''25 percent''

b. Revising paragraph (c) introductory text.

c. In paragraph (c)(3) by revising the words ''Correct all 12-hour average TRS concentrations to 10 volume percent oxygen, except that all 12-hour average TRS concentration from a recovery furnace shall be corrected to 8 volume percent using the following equation:'' to read ''Using the following equation, correct all 12-hour average TRS concentrations to 10 volume percent oxygen, except that all 12-hour average TRS concentrations from a recovery furnace shall be corrected to 8 volume percent oxygen instead of 10 percent, and all 12-hour average TRS concentrations from a facility to which the provisions of § 60.283(a)(1)(v) apply shall not be corrected for oxygen content:''

d. Paragraph (d)(3)(ii) is amended by revising the words ''1200°F'' to read ''650 °C (1200 °F).''

e. Adding paragraph (f).

The revisions and addition read as follows:

§ 60.284 Monitoring of emissions and operations.

* * * * *

(c) Any owner or operator subject to the provisions of this subpart shall, except where the provisions of § 60.283(a)(1)(iii) or (iv) apply, perform the following:

* * * * *

(f) The procedures under § 60.13 shall be followed for installation, evaluation, and operation of the continuous monitoring systems required under this section.

(1) All continuous monitoring systems shall be operated in accordance with the applicable procedures under Performance Specifications 1, 3, and 5 of appendix B to this part.

(2) Quarterly accuracy determinations and daily calibration drift tests shall be performed in accordance with Procedure 1 of appendix F to this part.

§ 60.285 [Amended]

95. Amend § 60.285 as follows:

a. In paragraph (c)(1) by revising the definition of the term ''c_s'' to read ''c_s = Concentration of particulate matter, g/dscm (lb/dscf).''

b. In paragraph (d)(3) by revising the equation used to calculate ''GLS'' as follows:

$$GLS = 100\ C_{Na_2S}/\left(C_{Na_2S}C_{NaOH}C_{Na_2CO_3}\right)$$

c. In paragraph (e)(1) by revising the definition of ''F'' to read ''F = conversion factor, 0.001417 g H_2S/m^3-ppm (8.846×10^{-8} lb H_2S/ft^3-ppm).''

d. In paragraph (f)(1) by revising the words ''205 °C (400 °F)'' to read ''204 °C (400 °F).''

e. Revising paragraph (f)(2).

The revisions read as follows:

§ 60.285 Test methods and procedures.

* * * * *

(f) * * *

(2) In place of Method 16, Method 16A or 16B may be used.

* * * * *

§ 60.290 [Amended]

96. In § 60.290, paragraph (c) is amended by revising the words ''4,550 kilograms'' to read ''4.55 Mg (5 tons).''

§ 60.291 [Amended]

97. Amend § 60.291 as follows:

a. The second sentence of the definition of the term ''Glass melting furnace'' is amended by revising the word ''appendaees'' to read ''appendages.''

b. The definition of the term ''lead recipe'' is amended by revising the chemical formula ''Na_2M'' to read ''Na_2O.''

c. The second sentence of the definition of the term ''rebricking'' is amended by revising the word ''replacment'' to read ''replacement.''

§ 60.292 [Amended]

98. In § 60.292, paragraph (a)(2), the definition of the term STD is amended by revising the words ''g of particulate/kg'' to read ''g of particulate/kg (lb of particulate/ton).''

§ 60.293 [Amended]

99. Amend § 60.293 as follows:

a. In paragraph (d)(1) by revising the words ''specified in paragraph (b)(1) of this section'' to read ''specified in paragraph (b) of this section.''

b. Paragraph (e) is redesignated as paragraph (f).

c. Paragraph (d)(3) introductory text is redesignated as paragraph (e); paragraphs (d)(3)(i), (ii), and (iii) are redesignated as paragraphs (e)(1), (2), and (3).

d. Newly designated paragraph (f) is amended by revising the words ''120±14°C'' to read ''120±14°C (248±25°F).

§ 60.296 [Amended]

100. Amend § 60.296 as follows:

In paragraph (b)(3) by revising the words ''American Society of Testing and Materials (ASTM) Method D240–76'' to read ''ASTM Method D240–76 or 92'' and by revising ''D1826–77'' to read ''D1826–77 or 94.''

§ 60.301 [Amended]

101. In § 60.301, the first paragraph is amended by revising the words ''the act'' to read ''the Act.''

§ 60.313 [Amended]

102. Amend § 60.313 as follows:

a. Paragraph (c)(1) is amended by revising the words ''Reference Method 24'' to read ''Method 24'' wherever they occur.

b. In paragraph (c)(1)(i)(B), the third sentence is amended by revising the words ''other transfer efficiencies other than'' to read ''transfer efficiencies other than.''

c. Paragraph (c)(2)(i) is amended by revising the words ''in (c)(2)(i)(A), (B), and (C)'' to read ''in paragraphs (c)(2)(i)(A), (B), and (C)'' wherever they occur.

§ 60.315 [Amended]

103. In § 60.315, paragraph (a)(2) is amended by revising the words ''Reference Method 24'' to read ''Method 24.''

§ 60.330 [Amended]

104. In § 60.330, paragraph (a) is amended by revising the words ''10.7 gigajoules'' to read ''10.7 gigajoules (10 million Btu).''

§ 60.331 [Amended]

105. In § 60.331, paragraph (s) is removed.

§ 60.332 [Amended]

106. In § 60.332, paragraph (a) is amended by revising the words ''the date of the performance test'' to read ''the date on which the performance test.''

§ 60.334 [Amended]

107. In § 60.334, paragraph (c)(3), the first sentence is amended by revising the words ''provided in § 60.332(g)'' to read ''provided in § 60.332(f).''

§ 60.335 [Amended]

108. Amend § 60.335 by:

a. Paragraph (c)(1) is amended by revising the words:

''NO_X = emission rate of NO_X at 15 percent O_2 and ISO standard ambient conditions, volume percent.

NO_X = observed NO_X concentration, ppm by volume.''

''NO_X = emission rate of NO_X at 15 percent O2 and ISO standard ambient conditions, ppm by volume.

NO_X = observed NO_X concentration, ppm by volume at 15 percent O_2.''

b. Paragraph (d) is revised.

c. In paragraph (f)(1), the first sentence is amended by revising the words ''in paragraph (b)(1) of this section'' to read ''in paragraph (c)(1) of this section.''

The revisions read as follows:

§ 60.335 Test methods and procedures.

* * * * *

(d) The owner or operator shall determine compliance with the sulfur content standard in § 60.333(b) as follows: ASTM D 2880–71, 78, or 96 shall be used to determine the sulfur content of liquid fuels and ASTM D 1072–80 or 90 (Reapproved 1994), D 3031–81, D 4084–82 or 94, or D 3246–81, 92, or 96 shall be used for the sulfur content of gaseous fuels (incorporated by reference-see § 60.17). The applicable ranges of some ASTM methods mentioned above are not adequate to measure the levels of sulfur in some fuel gases. Dilution of samples before analysis (with verification of the dilution ratio) may be used, subject to the approval of the Administrator.

* * * * *

§ 60.343 [Amended]

109. In § 60.343, paragraph (e), the first sentence is amended by revising the words ''in which the scrubber pressure drop is greater than 30 percent below the rate established during the performance test'' to read ''in which the scrubber pressure drop or scrubbing liquid supply pressure is greater than 30 percent below that established during the performance test.''

§ 60.344 [Amended]

110. Amend § 60.344 as follows:

a. In paragraph (b)(1), the definition of the term ''c_s'' is amended by revising the words ''(g/dscf)'' to read ''(gr/dscf).''

b. In paragraph (b)(1), the definition of the term ''K'' is amended by revising the words ''(453.6 g/lb)'' to read ''(7000 gr/lb).''

c. In paragraph (b)(2), the first sentence is amended by revising the words ''Method 5D shall be used as positive-pressure fabric filters'' to read ''Method 5D shall be used at positive-pressure fabric filters.''

§ 60.372 [Amended]

111. Amend § 60.372 as follows;

a. In paragraph (a)(1) by revising the words ''0.40 milligram of lead per dry standard cubic meter of exhaust (0.000176 gr/dscf)'' to read ''0.40 milligram of lead per dry standard cubic meter of exhaust (0.000175 gr/dscf).''

b. In paragraph (a)(2) by revising the words ''1.00 milligram of lead per dry standard cubic meter of exhaust (0.00044 gr/dscf)'' to read ''1.00 milligram of lead per dry standard cubic meter of exhaust (0.000437 gr/dscf).''

c. In paragraph (a)(3) by revising the words ''1.00 milligram of lead per dry standard cubic meter of exhaust (0.00044 gr/dscf)'' to read ''1.00 milligram of lead per dry standard cubic meter of exhaust (0.000437 gr/dscf).''

d. In paragraph (a)(5) by revising the words ''4.50 milligrams of lead per dry standard cubic meter of exhaust (0.00198 gr/dscf)'' to read ''4.50 milligrams of lead per dry standard cubic meter of exhaust (0.00197 gr/dscf).''

e. In paragraph (a)(6) by revising the words ''1.00 milligram per dry standard cubic meter of exhaust (0.00044 gr/dscf)'' to read ''1.00 milligram of lead per dry standard cubic meter of exhaust (0.000437 gr/dscf).''

§ 60.374 [Amended]

112. Amend § 60.374 as follows:

a. In paragraph (c)(1), in the definition of the term ''c_{Pbi}'' by revising the words ''mg/dscm'' to read ''mg/dscm (gr/dscf).''

b. In paragraph (c)(1), in the definition of the term ''K'' by revising the words ''453,600 mg/lb'' to read ''7000 gr/lb).''

§ 60.381 [Amended]

113. In § 60.381, in the definition of the term ''storage bin'' by revising the words ''or metallic minerals'' to read ''of metallic minerals.''

§ 60.382 [Amended]

114. In § 60.382, paragraph (a)(1) is amended by revising the words ''0.05 grams per dry standard cubic meter'' to read ''0.05 grams per dry standard cubic meter (0.02 g/dscm).''

§ 60.385 [Amended]

115. In § 60.385, paragraph (c) is amended by revising the words ''scrubber pressure loss (or gain) and liquid flow rate'' to read ''scrubber pressure loss (or gain) or liquid flow rate''.

§ 60.386 [Amended]

116. In § 60.386, paragraph (c) is amended by revising the words ''§ 60.3284(a) and (b)'' to read ''§ 60.384(a) and (b).''

§ 60.391 [Amended]

117. Amend § 60.391 as follows:

a. In paragraph (b), the definition of ''E'' is amended by revising the words ''destruction efficiency'' to read ''destruction or removal efficiency.''

b. In paragraph (b), the eleventh definition is amended by revising the words

''L_{ci}l = Volume of each coating (i) consumed by each application method (l), as received liters)''

to read

''L_{cil} = Volume of each coating (i) consumed by each application method (l), as received (liters).''

§ 60.393 [Amended]

118. Amend § 60.393 as follows:

a. In paragraph (c)(1)(i) by revising the words ''Reference Method 24'' to read ''Method 24'' wherever they occur.

b. Paragraph (c)(2)(ii)(A) is amended by revising the term to read as follows:

$$\sum_{l=1}^{n}$$

to read as follows:

$$\sum_{i=l}^{n}$$

§ 60.395 [Amended]

119. In § 60.395, paragraph (d) is amended by revising the words ''Reference Method 25'' to read ''Method 25.''

§ 60.396 [Amended]

120. In § 60.396, paragraphs (a)(1), (a)(2), (b), and (c) are amended by revising the words ''Reference Method'' to read ''Method.''

§ 60.401 [Amended]

121. In § 60.401, paragraph (b) is amended by revising the words ''unit including, moisture'' to read ''unit, including moisture.''

§ 60.402 [Amended]

122. In § 60.402, paragraph (a)(2)(i) is amended by revising the word ''Contains'' to read ''Contain.''

§ 60.424 [Amended]

123. Amend § 60.424 to read as follows:

a. In the first paragraph (b)(3), in the first sentence by revising the words

''scales or computed from material balance shall'' to read ''scales, or the result of computations using a material balance, shall.''

b. The second paragraph (b)(3) is redesignated as (b)(4).

§ 60.431 [Amended]

124. In § 60.431, paragraph (b), the definition of the term ''L_{di}'' is amended by adding the words ''the subject facility (or facilities)'' to the end of the definition.

§ 60.433 [Amended]

125. Amend § 60.433 as follows:

a. In paragraph (a)(5), the first sentence is amended by revising the words ''material or on at least'' to read ''material on at least.''

b. Paragraph (a)(5)(ii) is amended by revising the punctuation at the end of the paragraph. The words ''according to § 60.435.'' are revised to read ''according to § 60.435;''

c. Paragraphs(b)(1), (b)(2), (b)(3), (b)(5), (c)(2)(ii), and (c)(2)(iii) are amended by adding an ''='' between the ''i'' and the ''1'' under the summation sign.

d. Paragraph (c)(2)(v) is amended by replacing the ''e'' subscript with ''a'' wherever it occurs.

e. Paragraph (e)(5)(ii) is amended by replacing the ''a'' subscript with ''e'' wherever it occurs.

§ 60.435 [Amended]

126. Amend § 60.435 as follows:

a. Paragraphs (a)(1), (a)(2), and (b) are amended by revising the words ''Reference Method'' to read ''Method'' wherever they occur.

b. Paragraph (d)(1) is amended by revising the words ''ASTM D1475–60 (Reapproved 1980)'' to read ''ASTM D1475–60, 80, or 90.''

§ 60.440 [Amended]

127. In § 60.440, paragraph (b) is amended by revising the words ''45 Mg'' to read ''45 Mg (50 tons)'' wherever they occur.

§ 60.441 [Amended]

128. In § 60.441, paragraphs (a) and (b) are amended by revising the words ''Reference Method'' to read ''Method'' wherever they occur.

§ 60.443 [Amended]

129. Amend § 60.443 as follows:

a. In paragraph (b) by revising the words ''R_q less'' to read ''R_q is less.''

b. In paragraph (d) by revising the words ''in paragraph (b)(1) of this section'' to read ''in paragraph (b) of this section.''

c. In paragraph (e), in the third sentence by revising the words ''38°C (50°F)'' to read ''28°C (50°F).''

d. In paragraph (i) by revising the word ''devices'' to read ''device(s).''

§ 60.446 [Amended]

130. In § 60.446, paragraphs (a) and (b) are amended by revising the words ''Reference Method'' to read ''Method'' wherever they occur.

§ 60.453 [Amended]

131. Amend § 60.453 as follows:

a. In paragraph (b) by revising the words ''performance text'' to read ''performance test.''

b. In paragraph (b)(1) by revising the words ''Reference Method'' to read ''Method'' wherever they occur.

c. In paragraph (b)(1)(i)(B) by revising the word ''coatings'' to read ''coating.''

d. In paragraph (b)(1)(i)(C) by revising equation (3).

e. In paragraphs (b)(2)(i)(A) and (b)(2)(i)(B) by revising Equations (6) and (7).

f. In paragraph (b)(2)(i)(B) by removing Equation (7) and its nomenclature, adding them to the end of paragraph (b)(2)(i)(A), and redesignating the equation as Equation (6).

g. In paragraph (b)(3)(i) by revising the word ''assumed'' to read ''consumed.''

The revisions reads as follows:

§ 60.453 Test methods and procedures.

* * * * *

(b) * * *

(1) * * *

(i) * * *

(C) * * *

$$T = \frac{\sum_{i=1}^{n}\sum_{k=1}^{m} L_{cik}\, V_{sik}\, T_k}{L_s} \qquad (3)$$

* * * * *

(2) * * *

(i) * * *

(A) * * *

$$F = \frac{\sum_{i=1}^{n} Q_{bi} C_{bi}}{\sum_{i=1}^{n} Q_{bi} C_{bi} + \sum_{k=1}^{p} Q_{fk} C_{fk}} \qquad (6)$$

* * * * *

(B) * * *

$$E = \frac{\sum_{i=1}^{n} Q_{bi} C_{bi} - \sum_{j=1}^{m} Q_{aj} C_{aj}}{\sum_{i=1}^{n} Q_{bi}}$$

* * * * *

§ 60.454 [Amended]

132. In § 60.454, paragraph (a)(2) is amended by revising the words ''of the greater of 0.75 percent of the temperature being measured expressed in degrees Celsius or ±2.5°C'' to read ''of 0.75 percent of the temperature being measured, expressed in degrees Celsius, or ±2.5 °C, whichever is greater.''

§ 60.455 [Amended]

133. Amend § 60.455 as follows:

a. Paragraphs (c)(1) and (c)(2) are amended by revising the words ''28 °C'' to read ''28 °C'' (50 °F)'' wherever they occur.

b. In paragraph (d), the first sentence is amended by revising the word ''opreator'' to read ''operator.''

§ 60.456 [Amended]

134. Amend § 60.456 as follows:

a. In paragraph (a)(1), the second sentence is amended by revising the words ''Reference Method 24'' to read ''Method 24.''

b. In paragraph (a)(1), the third sentence is amended by revising the words ''subsection 4.4 of Method 24'' to read ''Section 12.6 of Method 24.''

c. Paragraph (a)(4) is amended by revising the word ''volocity'' to read ''velocity.''

d. Paragraph (c) is amended by revising the words ''0.003 dscm'' to read ''0.003 dscm (0.1 dscf).''

§ 60.463 [Amended]

135. Amend § 60.463 as follows:

a. Paragraph (c)(1) is amended by revising the words ''Reference Method 24'' to read ''Method 24'' wherever they occur.

b. Paragraph (c)(3)(iii) is amended by revising the word ''computation'' to read ''computations.''

c. Paragraph (c)(4)(ii) is amended by revising the defined term ''m'' to read ''n.''

§ 60.464 [Amended]

136. In § 60.464, paragraph (c), the second sentence is amended by revising the words ''which is greater'' to read ''whichever is greater.''

§ 60.465 [Amended]

137. Amend § 60.465 as follows:

a. In paragraph (c), the first sentence is amended by revising the reference ''§ 69.462'' to read ''§ 60.462.''

b. In paragraph (d), the first sentence is amended by revising the reference ''§ 69.464'' to read ''§ 60.464.''

§ 60.466 [Amended]

138. Amend § 60.466 as follows:

a. Paragraphs (a)(1) and (a)(2) are amended by revising the words

''Reference Method'' to read ''Method'' wherever they occur.

b. In paragraph (a)(1), the first sentence is amended by revising the words ''coating for determining the VOC content'' to read ''coating, shall be used for determining the VOC content.''

c. In paragraph (a)(1), the third sentence is amended by revising the words ''section 4.4'' to read ''Section 12.6.''

d. Paragraph (c) is amended by revising the words ''0.003 dry standard cubic meter (DSCM)'' to read ''0.003 dscm (0.11 dscf).''

§ 60.471 [Amended]

139. In § 60.471, the definition of the term ''Catalyst'' is amended by revising the words ''means means'' to read ''means.''

§ 60.472 [Amended]

140. Amend § 60.472 as follows:

a. Paragraph (a)(1)(i) is amended by revising the words ''0.04 kilograms of particulate per megagram'' to read ''0.04 kg/Mg (0.08 lb/ton).''

b. Paragraph (a)(1)(ii) is amended by revising the words ''0.04 kilograms per megagram'' to read ''0.04 kg/Mg (0.08 lb/ton).''

c. Paragraph (b)(1) is amended by revising the words ''0.67 kilograms of particulate per megagram'' to read ''0.67 kg/Mg (1.3 lb/ton).''

d. Paragraph (b)(2) is amended by revising the words ''0.71 kilograms of particulate per megagram'' to read ''0.71 kg/Mg (1.4 lb/ton).''

e. Paragraph (b)(3) is amended by revising the words ''0.60 kilograms of particulate per megagram'' to read ''0.60 kg/Mg (1.2 lb/ton).''

f. Paragraph (b)(4) is amended by revising the words ''0.64 kilograms of particulate per megagram'' to read ''0.64 kg/Mg (1.3 lb/ton).''

g. Paragraph (b)(5) is amended by revising the words ''procedures in § 60.474(k)'' to read ''procedures in § 60.474(g).''

§ 60.473 [Amended]

141. Amend § 60.473 as follows:

a. In paragraph (a), the second sentence is amended by revising the words ''±15°C'' to read ''±15°C (±25°F).''

b. In paragraph (b), the second sentence is amended by revising the words ''±10 °C'' to read ''±10 °C (±18 °F).''

c. In paragraph (c), the first sentence is amended by revising the words ''(a) and (b)'' to read ''(a) or (b)''

§ 60.474 [Amended]

142. Amend § 60.474 as follows:

a. In paragraph (c)(1), the definition of the term ''E'' is amended by revising the words ''kg/Mg'' to read ''kg/Mg (lb/ton).''

b. In paragraph (c)(1), the definition of the term ''c_s'' is amended by revising the words ''(g/dscf)'' to read ''(gr/dscf).''

c. In paragraph (c)(1), the definition of the term ''K'' is amended by revising the words ''907.2/(g-Mg)/(kg-ton)'' to read ''7000 gr/lb).''

d. In paragraph (c)(4), the definition of the term ''d'' is amended by revising the words ''llb/ft^3'' to read ''lb/ft^3.''

e. Paragraphs (c)(4)(ii) and (f) are revised.

The revisions read as follows:

§ 60.474 Test methods and procedures.

* * * * *

(c) * * *

(4) * * *

(ii) The density (d) of the asphalt shall be computed using the following equation:

$$d = K_1 - K_2 T_i$$

Where:

d = Density of the asphalt, kg/m^3 (lb/ft^3)

K_1 = 1056.1 kg/m^3 (metric units)

= 64.70 lb/ft^3 (English Units)

K_2 = 0.6176 kg/(m^3 °C) (metric units)

= 0.0694 lb/(ft^3 °F) (English Units)

T_i = temperature at the start of the blow, °C (°F)

* * * * *

(f) If at a later date the owner or operator believes that the emission limits in § 60.472(a) and (b) are being met even though one of the conditions listed in this paragraph exist, he may submit a written request to the Administrator to repeat the performance test and procedure outlined in paragraph (c) of this section.

(1) The temperature measured in accordance with § 60.473(a) is exceeding that measured during the performance test.

(2) The temperature measured in accordance with § 60.473(b) is lower than that measured during the performance test.

* * * * *

§ 60.480 [Amended]

143. In § 60.480(d)(2), line 3, revise the words ''1,000 Mg/yr'' to read ''1,000 Mg/yr (1,102 ton/yr)''

§ 60.481 [Amended]

144. Amend § 60.481 as follows:

a. Paragraph (a)(1) under the definition of ''Capital expenditure'' is amended by revising the words ''repair allowance, B, as reflected'' to ''repair allowance, B, divided by 100 as reflected''

b. The definition for ''In vacuum service'' is amended by revising the words ''5 kilopascals (kPa)'' to ''5 kilopascals (kPa)(0.7 psia).''

c. The definition of the term ''Repaired'' is amended by revising the words ''instrument reading or 10,000 ppm or greater'' to read ''instrument reading of 10,000 ppm or greater.''

§ 60.482–2 [Amended]

145. Amend § 60.482–2 as follows:

a. Paragraph (e) is amended by revising the words ''(a), (c), and (d) if the pump'' to read ''(a), (c), and (d) of this section if the pump.''

b. Paragraph (e)(3) is amended by revising the words ''paragraph (e)(2)'' to read ''paragraph (e)(2) of this section.''

c. Paragraph (f) is amended by revising the words ''exempt from the paragraphs (a) through (e)'' to read ''exempt from paragraphs (a) through (e) of this section.''

§ 60.482–3 [Amended]

146. In § 60.482–3, paragraph (i)(2) is amended by revising the words ''paragraph (i)(1)'' to read ''paragraph (i)(1) of this section.''

§ 60.482–4 [Amended]

147. In § 60.482–4, paragraph (c) is amended by revising the words ''paragraphs (a) and (b)'' to read ''paragraphs (a) and (b) of this section.''

§ 60.482–5 [Amended]

148. In § 60.482–5, paragraph (c) is amended by revising the words ''paragraphs (a) and (b).'' to read ''paragraphs (a) and (b) of this section.''

§ 60.482–7 [Amended]

149. In § 60.482–7, paragraph (f)(3) is amended by revising the words ''paragraph (f)(2)'' to read ''paragraph (f)(2) of this section.''

§ 60.482–10 [Amended]

150. In § 60.482–10, paragraph (c) is amended by revising the words ''temperature of 816 °C'' to read ''temperature of 816 °C (1500 °F).''

§ 60.483–1 [Amended]

151. In § 60.483–1, paragraph (b)(1) is amended by revising the words ''specified in § 60.487(b)'' to read ''specified in § 60.487(d).''

§ 60.483–2 [Amended]

152. In § 60.483–2, paragraph (a)(2) is amended by revising the words ''specified in § 60.487(b)'' to read ''specified in § 60.487(d).''

§ 60.484 [Amended]

153. In § 60.484, paragraph (f)(2) is amended by revising the words ''paragraphs (b), (c), (d), and (e)'' to read

''paragraphs (b), (c), (d), and (e) of this section.''

§ 60.485 [Amended]

154. Amend § 60.485 as follows:

a. In paragraph (c)(2), in the third sentence by revising the word ''indicates'' is revised to read ''indicated.''

b. In paragraph (d), in the first sentence by revising the words ''in VOC series'' to read ''in VOC service.''

c. In paragraph (d)(1) by revising the words ''ASTM E–260, E–168, E–169'' to read ''ASTM E260–73, 91, or 96, E168–67, 77, or 92, E169–63, 77, or 93.''

d. In paragraphs (e)(1) and (e)(2) by revising the words ''0.3 kPa at 20°C'' to read ''0.3 kPa at 20 °C (1.2 in. H_2O at 68 °F)'' wherever they occur.

e. In paragraph (e)(1) by revising ''ASTM D–2879'' to read ''ASTM D2879–83, 96, or 97.''

f. In paragraph (f) by revising the words ''paragraphs (d), (e), and (g)'' to read ''paragraphs (d), (e), and (g) of this section.''

g. Paragraphs (g)(3) and (g)(4) are revised.

h. In paragraph (g)(5) by revising ''ASTM D 2504–67'' to read ''ASTM D2504–67, 77, or 88 (Reapproved 1993).''

i. In paragraph (g)(6) by revising ''ASTM D 2382–76'' to read ''ASTM D2382–76 or 88 or D4809–95.''

The revisions read as follows:

§ 60.485 Test methods and procedures.

* * * * *

(g) * * *

(3) The maximum permitted velocity for air assisted flares shall be computed using the following equation:

$$V_{max} = K_1 + K_2 H_T$$

Where:

V_{max} = Maximum permitted velocity, m/sec (ft/sec)

H_T = Net heating value of the gas being combusted, MJ/scm (Btu/scf).

K_1 = 8.706 m/sec (metric units)
= 28.56 ft/sec (English units)

K_2 = 0.7084 m^4/(MJ-sec) (metric units)
= 0.087 ft^4/(Btu-sec) (English units)

(4) The net heating value (HT) of the gas being combusted in a flare shall be computed using the following equation:

$$H_T = K \sum_{i=1}^{n} C_i H_i$$

Where:

K = Conversion constant, 1.740×10^7 (g-mole)(MJ)/ (ppm-scm-kcal) (metric units)
= 4.674×10^8 [(g-mole)(Btu)/(ppm-scf-kcal)] (English units)

C_i = Concentration of sample component ''i,'' ppm

H_i = net heat of combustion of sample component ''i'' at 25 °C and 760 mm Hg (77 °F and 14.7 psi), kcal/g-mole

* * * * *

§ 60.486 [Amended]

155. In § 60.486, paragraph (c)(8) is amended by revising the word ''shutdown'' to read ''shutdowns.''

§ 60.487 [Amended]

156. In § 60.487, paragraph (d) is amended by revising the words ''An owner or operator electing to comply with the provisions of §§ 60.483–1 and 60.483–2'' to read ''An owner or operator electing to comply with the provisions of §§ 60.483–1 or 60.483–2.''

§ 60.489 [Amended]

157. Amend the table in § 60.489 as follows:

a. Revise the chemical name ''Chlorbenzoyl chloride'' to read ''Chlorobenzoyl chloride;''

b. Revise the chemical name ''Chloronapthalene'' to read ''Chloronaphthalene;''

c. Revise the CAS No. for diethylene glycol monobutyl ether acetate to read 124–17–4;

d. Revise the chemical name ''Ethylne carbonate'' to read ''Ethylene carbonate;''

e. Revise the chemical name ''Ethylene glycol monoethy ether'' to read ''Ethylene glycol monoethyl ether;''

f. Revise the chemical name ''Propional dehyde'' to read ''Propionaldehyde;'' and

g. Revise the chemical name ''Tetrahydronapthalene'' to read ''Tetrahydronaphthalene.''

§ 60.491 [Amended]

158. In § 60.491, paragraphs (a)(6) and (b) are amended by revising the word ''litre'' or ''litres'' to read ''liter'' or ''liters'' wherever it occurs.

§ 60.493 [Amended]

159. Amend § 60.493 as follows:

a. Paragraph (b)(1) is amended by revising the words ''Reference Method'' to read ''Method'' wherever they occur.

b. Paragraph (b)(1)(i)(C) is amended by revising the words ''volume-weighed average'' to read ''volume-weighted average.''

c. In paragraph (b)(1)(i)(C), equation 3 is revised.

d. Paragraph (b)(1)(iii) is amended by revising the words ''weighted average of mass of VOC'' to read ''weighted average mass of VOC.''

The revisions read as follows:

§ 60.493 Performance test and compliance provisions.

* * * * *

(b) * * *

(1) * * *

(i) * * *

(C) * * *

$$G = \frac{M_o + M_d}{L_s} \qquad (3)$$

* * * * *

§ 60.494 [Amended]

160. In § 60.494, paragraph (b), the second sentence is amended by revising the words ''accuracy the greater of ±0.75 percent of the temperature being measured expressed in degrees Celsius or ±2.5°C to read ''accuracy of 0.75 percent of the temperature being measured, expressed in degrees Celsius, or ±2.5°C, whichever is greater.''

§ 60.495 [Amended]

161. In § 60.495, paragraph (a)(1) is amended by revising the words ''from data determined using Reference Method 24 or supplies'' to read ''from data determined using Method 24 or supplied.''

§ 60.496 [Amended]

162. Revise § 60.496 as follows:

a. Paragraph (a)(1) is revised.

b. In paragraphs (a)(2), (b), and (c) by revising the words ''Reference Method'' to read ''Method'' wherever they occur.

c. In paragraph (a)(2) by revising the words ''30 days in advance'' to read ''at least 30 days in advance.''

The revisions read as follows:

§ 60.496 Test methods and procedures.

(a) * * *

(1) Method 24, an equivalent or alternative method approved by the Administrator, or manufacturers' formulation data from which the VOC content of the coatings used for each affected facility can be calculated. In the event of a dispute, Method 24 data shall govern. When VOC content of water-borne coatings, determined from data generated by Method 24, is used to determine compliance of affected facilities, the results of the Method 24 analysis shall be adjusted as described in Section 12.6 of Method 24.

* * * * *

§ 60.501 [Amended]

163. In § 60.501, the definition of ''Vapor-tight gasoline tank truck'' is amended by revising the words ''Reference Method'' to read ''Method.''

§ 60.531 [Amended]

164. Amend § 60.531 as follows:

a. Under the definition of ''Coal-only heater'', the alphabetical designations of paragraphs (a) through (e) are removed and numerical designations (1) through (5) are added.

b. Under the definition of ''Cookstove'', the alphabetical designations of paragraphs (a) through (g) are removed and numerical designations (1) through (7) are added.

c. Under the definition of ''Wood heater'', paragraph (2) is amended by revising the words ''20 cubic feet'' to read ''0.57 cubic meters (20 cubic feet).''

d. Under the definition of ''Wood heater'', paragraph (3) is amended by revising the words ''5 kg/hr'' to read ''5 kg/hr (11 lb/hr).''

e. Under the definition of ''Wood heater'', paragraph (4) is amended by revising the words ''800 kg'' to read ''800 kg (1,760 lb).''

§ 60.532 [Amended]

165. Amend § 60.532 as follows:

a. In paragraph (b)(1) by revising the words ''4.1 g/hr'' to read ''4.1 g/hr (0.009 lb/hr).''

b. Paragraphs (b)(1)(i), (b)(1)(ii), and (b)(2) are revised.

The revisions read as follows:

§ 60.532 Standards for particulate matter.

* * * * *

(b) * * *

(1) * * *

(i) At burn rates less than or equal to 2.82 kg/hr (6.2 lb/hr),

$$C = K_1 BR + K_2$$

Where:

BR = Burn rate in kg/hr (lb/hr)

K_1 = 3.55 g/kg (0.00355 lb/lb)

K_2 = 4.98 g/hr (0.0.011 lb/hr)

(ii) At burn rates greater than 2.82 kg/hr (6.2 lb/hr), C = 15 g/hr (0.033 lb/hr).

(2) An affected facility not equipped with a catalytic combustor shall not discharge into the atmosphere any gases which contain particulate matter in excess of a weighted average of 7.5 g/hr (0.017 lb/hr). Particulate emissions shall not exceed 15 g/hr (0.033 lb/hr) during any test run at a burn rate less than or equal to 1.5 kg/hr (3.3 lb/hr) that is required to be used in the weighted average and particulate emissions shall not exceed 18 g/hr (0.040 lb/hr) during any test run at a burn rate greater than 1.5 kg/hr (3.3 lb/hr) that is required to be used in the weighted average.

* * * * *

§ 60.533 [Amended]

166. Amend § 60.533 as follows:

a. In paragraph (k)(1), the third sentence is amended by revising the words ''The grant of such a waiver'' to read ''The granting of such a waiver.''

b. Paragraph (k)(2) is amended by revising the words ''± ¼ inch'' to read ''± 0.64 cm (± ¼ inch).''

c. In paragraph (o)(4), the first sentence is amended by revising the word ''indicate'' to read ''indicates.''

d. In paragraph (o)(4), the first sentence is amended by revising the words ''comply with applicable emission limit'' to read ''comply with the applicable emission limit.''

e. In paragraph (p)(4)(ii)(A), the second sentence is amended by revising the words ''± 1 gram per hour'' to read ''± 1 gram per hour (± 0.0022 lb per hour).''

§ 60.535 [Amended]

167. In § 60.535, paragraph (b)(9) is amended by revising the words ''a reporting and recordkeeping requirements'' to read ''reporting and recordkeeping requirements.''

§ 60.536 [Amended]

168. Amend § 60.536 as follows:

a. Paragraph (a)(3)(ii) and the equation in (i)(4)(ii) are revised.

b. Paragraph (j)(2)(v) is amended by revising the words ''five inches by seven inches'' to read ''12.7 centimeters by 17.8 centimeters (5 inches by 7 inches).''

The revisions read as follows:

§ 60.536 Permanent label, temporary label, and owner's manual.

(a) * * *

(3) * * *

(ii) Be at least 8.9 cm long and 5.1 cm wide (3½ inches long and 2 inches wide).

* * * * *

(i) * * *

(4) * * *

(ii) * * *

$$HO_E = H_v \times (\text{Estimated overall efficiency}/100) \times BR$$

Where:

HO_E = Estimated heat output in Btu/hr

H_v = Heating value of fuel, 19,140 Btu/kg (8,700 Btu/lb)

BR = Burn rate of dry test fuel per hour, kg (lb)

* * * * *

§ 60.541 [Amended]

169. Amend § 60.541 as follows:

a. In paragraph (b), the definitions of the terms ''D_c'' and ''D_r'' are amended by revising the words ''(grams per liter)'' to read ''(grams per liter (lb per gallon)).''

b. In paragraph (b), the definitions of the terms ''G'' and ''N'' are amended by revising the words ''(grams per tire)'' to read ''(grams (lb) per tire).''

c. In paragraph (b), the definitions of the terms ''G_b'' and ''N_b'' are amended by revising the words ''(grams per bead)'' to read ''(grams (lb) per bead).''

d. In paragraph (b), the definitions of the terms ''L_c'' and ''L_r'' are amended by revising the word ''(liters)'' to read ''(liters (gallons)).''

e. In paragraph (b), the definitions of the terms ''M'', ''M_o'', and ''M_r'' are amended by revising the word ''(grams)'' to read ''(grams (lb)).''

f. In paragraph (b), the definitions of the terms ''Q_a'', ''Q_b'', and ''Q_f'' are amended by revising the words ''(dry standard cubic meters per hour)'' to read ''(dry standard cubic meters (dry standard cubic feet) per hour).''

§ 60.542 [Amended]

170. Amend § 60.542 as follows:

a. Paragraphs (a)(1)(ii)(A) through (E), (a)(2)(ii)(A) through (E), (a)(6)(ii)(A) through (E), (a)(8)(ii)(A) through (E), and (a)(9)(ii)(A) through (E) are revised.

b. In paragraph (a)(3) by revising the words ''no more than 10 grams of VOC per tire (g/tire)'' to read ''no more than 10 grams (0.022 lb) of VOC per tire.''

c. In paragraph (a)(4) by revising the words ''no more than 5 grams of VOC per bead (g/bead)'' to read ''no more than 5 grams (0.011 lb) of VOC per bead.''

d. In paragraph (a)(5)(i) by revising the words ''1.2 grams of VOC per tire'' to read ''1.2 grams (0.0026 lb) of VOC per tire.''

e. In paragraph (a)(5)(ii) by revising the words ''9.3 grams of VOC per tire'' to read ''9.3 grams (0.021 lb) of VOC per tire.''

f. In paragraph (a)(7)(i) by revising the words ''1.2 grams of VOC per tire'' to read ''1.2 grams (0.0026 lb) of VOC per tire.''

g. In paragraph (a)(7)(ii) by revising the words ''9.3 grams of VOC per tire'' to read ''9.3 grams (0.021 lb) of VOC per tire.''

The revisions read as follows:

§ 60.542 Standards for volatile organic compounds.

(a) * * *

(1) * * *

(ii) * * *

(A) 3,870 kg (8,531 lb) of VOC per 28 days,

(B) 4,010 kg (8,846 lb) of VOC per 29 days,

(C) 4,150 kg (9,149 lb) of VOC per 30 days,

(D) 4,280 kg (9,436 lb) of VOC per 31 days, or

(E) 4,840 kg (10,670 lb) of VOC per 35 days.

* * * * *

(2) * * *

(ii) * * *

(A) 3,220 kg (7,099 lb) of VOC per 28 days,

(B) 3,340 kg (7,363 lb) of VOC per 29 days,

(C) 3,450 kg (7,606 lb) of VOC per 30 days,

(D) 3,570 kg (7,870 lb) of VOC per 31 days, or

(E) 4,030 kg (8,885 lb) of VOC per 35 days.

* * * * *

(6) * * *

(ii) * * *

(A) 3,220 kg (7,099 lb) of VOC per 28 days,

(B) 3,340 kg (7,363 lb) of VOC per 29 days,

(C) 3,450 kg (7,606 lb) of VOC per 30 days,

(D) 3,570 kg (7,870 lb) of VOC per 31 days, or

(E) 4,030 kg (8,885 lb) of VOC per 35 days.

* * * * *

(8) * * *

(ii) * * *

(A) 1,570 kg (3,461 lb) of VOC per 28 days,

(B) 1,630 kg (3,593 lb) of VOC per 29 days,

(C) 1,690 kg (3,726 lb) of VOC per 30 days,

(D) 1,740 kg (3,836 lb) of VOC per 31 days, or

(E) 1,970 kg (4,343 lb) of VOC per 35 days.

* * * * *

(9) * * *

(ii) * * *

(A) 1,310 kg (2,888 lb) of VOC per 28 days,

(B) 1,360 kg (2,998 lb) of VOC per 29 days,

(C) 1,400 kg (3,086 lb) of VOC per 30 days,

(D) 1,450 kg (3,197 lb) of VOC per 31 days, or

(E) 1,640 kg (3,616 lb) of VOC per 35 days.

* * * * *

§ 60.542a [Amended]

171. In § 60.542a, paragraph (a) is amended by revising the words ''25 grams'' to read ''25 grams (0.055 lb)'' wherever they occur.

§ 60.543 [Amended]

172. Amend § 60.543 as follows:

a. In paragraph (c), the first sentence is amended by deleting the abbreviation ''(kg/mo).''

b. Paragraph (d) is amended by revising the words ''the g/tire limit'' to read ''the VOC emission per tire limit.''

c. Paragraph (e) is amended by revising the words ''g/bead limit'' to read ''VOC emission per bead limit.''

d. Paragraph (f) is amended by revising the words ''operation that use'' to read ''operation that uses.''

e. Paragraphs (f)(2)(iv)(G) and (f)(2)(iv)(H) are amended by revising the definitions of the terms ''W'', ''V'', ''Q_i'', and ''M_i'' following the equations as follows:

W = Molecular weight of the single VOC, mg/mg-mole (lb/lb-mole).

V = The volume occupied by one mole of ideal gas at standard conditions [20°C, 760 mm Hg] on a wet basis, 2.405×10^{-5} m^3/mg-mole (385.3 ft^3/lb-mole).

Q_i = Volumetric flow in the capture system during run i, on a wet basis, adjusted to standard conditions, m^3 (ft^3) (see § 60.547(a)(5)).

M_i = Mass of the single VOC used during run i, mg (lb).

f. Paragraphs (g) and (i) are amended by revising the words ''operation that use'' to read ''operation that uses'' wherever they occur.

g. Paragraphs (j)(4) and (j)(5)(ii) are amended by revising the words ''100 feet per minute'' to read ''30.5 meters (100 feet) per minute'' wherever they occur.

h. Paragraphs (n) and (n)(5) are amended by revising the words ''25 g/tire limit'' to read ''VOC emission per tire limit'' wherever they occur.

§ 60.544 [Amended]

173. In § 60.544, paragraph (a)(2) is amended by revising the word ''temperatrue'' to read ''temperature.''

§ 60.545 [Amended]

174. Amend § 60.545 as follows:

a. Paragraph (b) is amended by revising the words ''28 °C'' to read ''28 °C (50 °F).''

b. Paragraph (d) is amended by revising the words ''specified kg/mo uncontrolled VOC use'' to read ''specified VOC monthly usage.''

c. Paragraph (f) is amended by revising the citation ''§ 60.543(B)(4)'' to read ''§ 60.543(b)(4).''

§ 60.546 [Amended]

175. Amend § 60.546 as follows:

a. Paragraph (a) is amended by revising the words ''green tires spraying operation where organic solvent-based spray are used'' to read ''green tire spraying operation where organic solvent-based sprays are used.''

b. Paragraph (c)(1) is amended by revising the words ''kg/mo uncontrolled VOC use'' to read ''VOC monthly usage.''

c. Paragraph (c)(1) is amended by revising the words ''the number days'' to read ''the number of days.''

d. Paragraphs (c)(2), (c)(3), and (c)(5) are amended by revising the words ''g/tire or g/bead limit'' to read ''VOC emission limit per tire or per bead'' wherever they occur.

e. In paragraph (d), the second sentence is amended by revising the words ''(kg/hr)'' to read ''(kg/hr or lb/hr).''

f. Paragraph (f)(1) is amended by revising the words ''g/tire or g/bead limit'' to read ''VOC emission limit per tire or per bead.''

g. Paragraph (f)(2) is amended by revising the words ''kg/mo VOC use'' to read ''monthly VOC usage.''

h. In paragraph (j), the second sentence is amended by revising the words ''shall be reported within 30 days'' to read ''shall be reported within 30 days of the change.''

§ 60.547 [Amended]

176. Amend § 60.547 as follows:

a. Paragraphs (a)(2) and (a)(5) are amended by revising the words ''notify the Administrator 30 days in advance'' to read ''notify the Administrator at least 30 days in advance'' wherever they occur.

b. Paragraphs (a)(2) and (a)(5) are amended by revising the words ''1 meter'' to read ''1.0 meter (3.3 feet)'' wherever they occur.

c. Paragraphs (a)(2) and (a)(5)(i) are amended by revising the words ''0.003 dry standard cubic meter'' to read ''0.003 dry standard cubic meter (dscm) (0.11 dry standard cubic feet (dscf))'' wherever they occur.

§ 60.560 [Amended]

177. Amend § 60.560 as follows:

a. Paragraph (a)(4)(i) is amended by revising the words ''1,000 Mg/yr'' to read ''1,000 Mg/yr (1,102 ton/yr).''

b. In paragraph (b), Table 1 is revised to read as follows:

Polymer	Production process(es)	Process section	Emissions	
			Continuous	Intermittent
Polypropylene	Liquid Phase	Raw Materials Preparation	X	
		Polymerization Reaction	X	

Polymer	Production process(es)	Process section	Emissions	
			Continuous	Intermittent
		Material Recovery	X	X
		Product Finishing	X	
		Product Storage		
Polypropylene	Gas Phase	Raw Materials Preparation		
		Polymerization Reaction		X
		Material Recovery	X	
		Product Finishing		
		Product Storage		
Low Density Polyethylene	High Pressure	Raw Materials Preparation		X
		Polymerization Reaction		X
		Material Recovery		X
		Product Finishing		X
		Product Storage		X
Low Density Polyethylene	Low Pressure	Raw Materials Preparation	X	X
High Density Polyethylene	Gas Phase	Polymerization Reaction		X
		Material Recovery		
		Product Finishing	X	
		Product Storage		
High Density Polyethylene	Liquid Phase Slurry	Raw Materials Preparation		X
		Polymerization Reaction		
		Material Recovery	X	
		Product Finishing	X	
		Product Storage		
High Density Polyethylene	Liquid Phase Solution.	Raw Materials Preparation	X	X
		Polymerization Reaction		X
		Material Recovery	X	X
		Product Finishing		
		Product Storage		

c. In paragraph (d), Table 2 is revised.

d. Paragraph (g) is amended by revising the words ''1.6 Mg/yr'' to read ''1.6 Mg/yr (1.76 ton/yr)'' wherever they occur.

The revision reads as follows:

§ 60.560 Applicability and designation of affected facilities.

* * * * * * *

(d) * * *

TABLE 2.—MAXIMUM UNCONTROLLED THRESHOLD EMISSION RATES [a]

Production process	Process section	Uncontrolled emission rate, kg TOC/Mg product (See associated footnote)
Polypropylene, liquid phase process	Raw Materials Preparation	0.15 [b]
	Polymerization Reaction	0.14 [b], 0.24 [c]
	Material Recovery	0.19 [b]
	Product Finishing	1.57 [b]
Polypropylene, gas phase process	Polymerization Reaction	0.12 [c]
	Material Recovery	0.02 [b]
Low Density Polyethylene, low pressure process	Raw Materials Preparation	0.41 [d]
	Polymerization Reaction	(e)
	Material Recovery	(e)
	Product Finishing	(e)
	Product Storage	(e)
Low Density Polythylene, low pressure process	Raw Materials Preparation	0.05 [f]
	Polymerization Reaction	0.03 [g]
	Product Finishing	0.01 [b]
High Density Polyethylene, liquid phase slurry process	Raw Materials Preparation	0.25 [c]
	Material Recovery	0.11 [b]
	Product Finishing	0.41 [b]
High Density Polyethylene, liquid phase solution process	Raw Materials Preparation	0.24 [f]
	Polymerization Reaction	0.16 [c]
	Material Recovery	1.68 [f]
High Density Polyethylene, gas phase process	Raw Materials Preparation	0.05 [f]
	Polymerization Reaction	0.03 [g]

TABLE 2.—MAXIMUM UNCONTROLLED THRESHOLD EMISSION RATES [a]—Continued

Production process	Process section	Uncontrolled emission rate, kg TOC/Mg product (See associated footnote)
	Product Finishing	0.01 [b]
Polystyrene, continuous process	Material Recovery	0.05 [b, h]
Poly(ethylene terephalate), dimethyl terephthalate process	Material Recovery	0.12 [b h]
	Polymerization Reaction	1.80 [h i j,]
Poly(ethlyene terephthalate), terephthalic acid process	Raw Materials Preparation	(l)
	Polymerization Reaction	1.80 [h j m]
		3.92 [h k m]

[a] "Uncontrolled emission rate" refers to the emission rate of a vent stream that vents directly to the atmosphere and to the emission rate of a vent stream to the atmosphere that would occur in the absence of any add-on control devices but after any material recovery devices that constitute part of the normal material recovery operations in a process line where potential emissions are recovered for recycle or resale.
[b] Emission rate applies to continuous emissions only.
[c] Emission rate applies to intermittent emissions only.
[d] Total emission rate for non-emergency intermittent emissions from raw materials preparation, polymerization reaction, material recovery, product finishing, and product storage process sections.
[e] See footnote d.
[f] Emission rate applies to both continuous and intermittent emissions.
[g] Emission rate applies to non-emergency intermittent emissions only.
[h] Applies to modified or reconstructed affected facilities only.
[i] Includes emissions from the cooling water tower.
[j] Applies to a process line producing low viscosity poly(ethylene terephthlalate).
[k] Applies to a process line producing high viscosity poly(ethylene terephathalate).
[l] See footnote m.
[m] Applies to the sum of emissions to the atmosphere from the polymerization reaction section (including emissions from the cooling tower) and the raw materials preparation section (i.e., the esterifiers).

* * * * *

§ 60.561 [Amended]

178. Amend § 60.561 as follows:

a. The definition of "End finisher" is amended as revising the words "2 torr" in the first sentence to read "2 mm Hg (1 in. H_2O)"; and by revising the words "between 5 and 10 torr" in the second sentence to read "between 5 and 10 mm Hg (3 and 5 in. H_2O)."

b. The definition of "High density polyethylene (HDPE)" is amended by revising the words "0.940 g/cm^3" to read "0.940 gm/cm^{3}3 (58.7 lb/ft^3)."

c. The definition of "High pressure process" is amended by revising the words "15,000 psig" to read "15,000 psig (103,000 kPa gauge)."

d. The definition of "Low density polyethylene (LDPE)" is amended by revising the words "0.940 g/cm^3" to read "0.940 g/cm^3 (58.7 lb/ft^3)."

e. The definition of "Low pressure process" is amended by revising the words "300 psig" to read "300 psig (2,070 kPa gauge)."

§ 60.562–1 [Amended]

179. Amend § 60.562–1 as follows:

a. In paragraph (a)(1)(iii), the second sentence is amended by revising the words "18.2 Mg/yr" to read "18.2 Mg/yr (20.1 ton/yr)."

b. Paragraph (b)(1)(i) is amended by revising the words "0.0036 kg TOC/Mg" to read "0.0036 kg TOC/Mg (0.0072 lb TOC/ton)."

c. Paragraph (c)(1)(i)(A) is amended by revising the words "0.018 kg TOC/Mg" to read "0.018 kg TOC/Mg (0.036 lb TOC/ton)."

d. Paragraph (c)(1)(ii)(A) is amended by revising the words "0.02 kg TOC/Mg" to read "0.02 kg TOC/Mg (0.04 lb TOC/ton)."

e. Paragraph (c)(1)(ii)(C) is amended by inserting a comma after the word "weight".

f. Paragraph (c)(2)(i) is amended by revising the words "0.04 kg TOC/Mg" to read "0.04 kg TOC/Mg (0.08 lb TOC/ton)."

g. Paragraph (c)(2)(ii)(A) is amended by revising the words "0.02 kg TOC/Mg" to read "0.02 kg TOC/Mg (0.04 lb TOC/ton)."

h. Paragraph (c)(2)(ii)(C) is amended by inserting a comma after the word "weight".

§ 60.562–2 [Amended]

180. In § 60.562–2, paragraph (d) is amended by revising the words "150 °C as determined by ASTM Method D86–78" to read "150 °C (302 °F) as determined by ASTM Method D86–78, 82, 90, 95, or 96."

§ 60.564 [Amended]

181. Amend § 60.564 as follows:

a. In paragraph (c)(1), the definitions of the terms "E_{inlet}" and "E_{outlet}" are amended by revising the words "kg TOC/hr" to read "kg TOC/hr (lb TOC/hr)" wherever they occur.

b. In Paragraphs (d)(1), (f) introductory text, and (j)(1)(iv), the equations and definitions are revised; and paragraphs (g)(2) and (g)(3) are revised.

c. Paragraph (f)(1) is amended by revising "ASTM D1946–77" to read "ASTM D1946–77 or 90 (Reapproved 1994)."

d. Paragraph (f)(3) is amended by revising "ASTM D2382–76" to read "ASTM D2382–76 or 88 or D4809–95."

e. In paragraph (h) designate the second paragraph as (h)(1), redesignate existing paragraphs (h)(1) and (h)(2) as paragraphs (h)(2) and (h)(3) and revise the equations and definitions in newly redesignated paragraph (h)(1).

f. Paragraph (h)(3) is amended by revising the words "The rate of polymer produced, P_p (kg/hr), shall be determined by dividing the weight of polymer pulled in kilograms (kg) from the process line during the performance test by the number of hours (hr) taken to perform the performance test. The polymer pulled, in kilograms, shall" to read "The rate of polymer production, P_p, shall be determined by dividing the weight of polymer pulled (in kg (lb)) from the process line during the performance test by the number of hours taken to perform the performance test. The weight of polymer pulled shall."

g. Paragraph (j)(1) introductory text is amended by revising "ASTM D2908–74" to read "ASTM D2908–74 or 91."

h. Paragraph (j)(1)(i) is amended by revising ''ASTM D3370–76'' to read ''ASTM D3370–76 or 96a.''

The revisions read as follows:

§ 60.564 Test methods and procedures.

* * * * *

(d) * * *

(1)

$$E_{unc} = K_2\left(\sum_{j=1}^{n} C_j M_j\right) Q \times 8{,}600$$

Where:

E_{unc} = uncontrolled annual emissions, Mg/yr (ton/yr)

C_j = concentration of sample component j of the gas stream, dry basis, ppmv

M_j = molecular weight of sample component j of the gas stream, g/g-mole (lb/lb-mole)

Q = flow rate of the gas stream, dscm/hr (dscf/hr)

$K_2 = 4.157 \times 10^{-11}$ [(Mg)(g-mole)]/[(g)(ppm)(dscm)] (metric units)

$= 1.298 \times 10^{-12}$ [(ton)(lb-mole)]/[(lb)(ppm)(dscf)] (English units)

8,600 = operating hours per year

* * * * *

(f) * * *

$$H_T = K_3\left(\sum_{j=1}^{n} C_j J_j\right)$$

Where:

H_T = Vent stream net heating value, MJ/scm (Btu/scf), where the net enthalpy per mole of offgas is based on combustion at 25 °C and 760 mm Hg (68 °F and 30 in. Hg), but the standard temperature for determining the volume corresponding to one mole is 20 °C (68 °F).

$K_3 = 1.74 \times 10^{-7}$ (1/ppm)(g-mole/scm)(MJ/kcal) (metric units), where standard temperature for (g-mole/scm) is 20°C.

$= 4.67 \times 10^{-6}$ (1/ppm)(lb-mole/scf)(Btu/kcal) (English units) where standard temperature for (lb/mole/scf) is 68 °F.

C_j = Concentration on a wet basis of compound j in ppm.

H_j = Net heat of combustion of compound j, kcal/(g-mole) (kcal/(lb-mole)), based on combustion at 25 °C and 760 mm Hg (77 °F and 30 in. Hg).

* * * * *

(g) * * *

(2) If applicable, the maximum permitted velocity (V_{max}) for steam-assisted and nonassisted flares shall be computed using the following equation:

$$\mathrm{Log}_{10}(V_{max}) = (H_T + K_4)/K_5$$

Where:

V_{max} = Maximum permitted velocity, m/sec (ft/sec)

K_4 = 28.8 (metric units), 1212 (English units)

K_5 = 31.7 (metric units), 850.8 (English units)

H_T = The net heating value as determined in paragraph (f) of this section, MJ/scm (Btu/scf).

(3) The maximum permitted velocity, V_{max}, for air-assisted flares shall be determined by the following equation:

$$V_{max} = K_6 + K_7 H_T$$

Where:

V_{max} = Maximum permitted velocity, m/sec (ft/sec).

K_6 = 8.706 m/sec (metric units)

= 28.56 ft/sec (English units)

K_7 = 0.7084 [(m/sec)/MJ/scm)] (metric units)

= 0.00245 [(ft/sec)/Btu/scf)] (English units)

H_T = The net heating value as determined in paragraph (f) of this section, MJ/scm (Btu/scf).

* * * * *

(h) * * *

(i) * * *

$$ER_{TOC} = K_5 \frac{E_{TOC}}{P_p}$$

Where:

ER_{TOC} = Emission rate of total organic compounds (minus methane and ethane), kg TOC/Mg (lb TOC/ton) product

E_{TOC} = Emission rate of total organic compounds (minus methane and ethane) in the sample, kg/hr (lb/hr)

P_p = The rate of polymer production, kg/hr (lb/hr)

K_5 = 1,000 kg/Mg (metric units)

= 2,000 lb/ton (English units)

* * * * *

(j) * * *

(1) * * *

(iv) * * *

$$CI_{95} = \frac{\sum_{i=1}^{n} X_i}{n} + 2\sqrt{\frac{n\sum_{i=1}^{n} X_i^2 - \left(\sum_{i=1}^{n} X_i\right)^2}{n(n-1)}}$$

Where:

X_i = daily ethylene glycol concentration for each day used to calculate the 14-day rolling average used in test results to justify implementing the reduced testing program.

n = number of ethylene glycol concentrations.

* * * * *

§ 60.565 [Amended]

182. Amend § 60.565 as follows:

a. In paragraph (a)(1)(ii), the first sentence is amended by revising the words ''kilograms TOC (minus methane and ethane) per megagram of product'' to read ''kg TOC (minus methane and ethane) per Mg (lb TOC/ton) of product.''

b. In paragraph (a)(2)(ii) by revising the word ''boiler'' to read ''boilers.''

c. In paragraph (f)(1)(i) by removing the words ''are exceeded.''

§ 60.581 [Amended]

183. Amend § 60.581 as follows:

a. In paragraph (a), the definition of the term ''ink solids'' is amended by revising the words ''Reference Method'' to read ''Method.''

b. In paragraph (b), the definitions of the terms ''W_{oi}'', ''W_{si}'', and ''W_{oj}'' are amended by revising the words ''Reference Method'' to read ''Method'' wherever they occur.

§ 60.583 [Amended]

184. Amend § 60.583 as follows:

a. In paragraph (a) introductory text by revising the words ''Reference Methods'' to read ''Methods.''

b. In paragraphs (a)(1), (b)(4), (b)(5), (c)(2), (c)(3), and (c)(4) by revising the words ''Reference Method'' to read ''Method'' wherever they occur.

§ 60.584 [Amended]

185. Amend § 60.584 as follows:

a. In paragraphs (b)(1) and (c)(1) by revising the words ''of ±0.75 percent of the temperature being measured or ±2.5° C'' to read ''of ±0.75 percent of the temperature being measured, expressed in degrees Celsius, or ±2.5° C.''

b. In paragraph (b)(2) by revising the words ''more than 28° C'' to read ''more than 28° C (50° F).''

§ 60.593 [Amended]

186. Amend § 60.593 as follows:

a. In paragraph (b)(2) by revising ''ASTM E–260, E–168, or E–169'' to read ''ASTM E260–73, 91, or 96, E168–67, 77, or 92, or E169–63, 77, or 93.''

b. In paragraph (d) by revising ''ASTM Method D86'' to read ''ASTM Method D86–78, 82, 90, 95, or 96.''

§ 60.600 [Amended]

187. In § 60.600, paragraph (a) is amended by revising the words ''500 megagrams'' to read ''500 Mg (551 ton).''

§ 60.602 [Amended]

188. Amend § 60.602 as follows:

a. By removing the paragraph designation ''(a)''.

b. In the first sentence, by revising the words ''10 kilograms (kg) VOC per megagram (Mg)'' to read ''10 kg/Mg (20 lb/ton).''

c. In the second sentence, by revising the words ''10 kg VOC per Mg'' to read ''10 kg/Mg (20 lb/ton).''

d. In the third sentence by revising the words ''17 kg VOC per Mg'' to read ''17 kg/Mg (34 lb/ton).''

§ 60.603 [Amended]

189. Amend § 60.603 as follows:

a. In paragraph (b) introductory text, the first sentence is amended by revising the words ''VOC emissions per Mg solvent feed'' to read ''VOC emissions per unit mass solvent feed.''

b. In paragraph (b)(2) by revising the second equation and by revising the definitions following the equations.

c. Paragraph (b)(2)(i) is redesignated as paragraph (b)(3), and newly redesignated paragraph (b)(3) is amended by revising the words ''13 kg per Mg solvent feed'' to read ''13 kg/Mg (26 lb/ton) solvent feed.''

The revisions read as follows:

§ 60.603 Performance test and compliance provisions.

* * * * *

(b) * * *

(2) * * *

$$S_W = \frac{S_V S_P D}{K}$$

E = VOC Emissions, in kg/Mg (lb/ton) solvent;

S_V = Measured or calculated volume of solvent feed, in liters (gallons);

S_W = Weight of solvent feed, in Mg (ton);

M_V = Measured volume of makeup solvent, in liters (gallons);

M_W = Weight of makeup, in kg (lb);

N = Allowance for nongaseous losses, 13 kg/Mg (26 lb/ton) solvent feed;

S_P = Fraction of measured volume that is actual solvent (excludes water);

D = Density of the solvent, in kg/liter (lb/gallon);

K = Conversion factor, 1,000 kg/Mg (2,000 lb/ton);

I = Allowance for solvent inventory variation or changes in the amount of solvent contained in the affected facility, in kg/Mg (lb/ton) solvent feed (may be positive or negative);

I_S = Amount of solvent contained in the affected facility at the beginning of the test period, as determined by the owner or operator, in kg (lb);

I_E = Amount of solvent contained in the affected facility at the close of the test period, as determined by the owner or operator, in kg (lb).

* * * * *

§ 60.604 [Amended]

190. In § 60.604, paragraph (b) is amended by revising the words ''500 megagrams'' to read ''500 Mg (551 ton)'' wherever they occur.

§ 60.613 [Amended]

191. Amend § 60.613 as follows:

a. In paragraph (c) introductory text by revising the words ''in the following equipment'' to read ''the following equipment.''

b. Paragraphs (d) and (e) are redesignated as (e) and (f).

c. Paragraph (c)(3) is redesignated as paragraph (d).

§ 60.614 [Amended]

192. Amend § 60.614 as follows:

a. In paragraph (b)(4)(ii), the definitions of the terms ''E_i'' and ''E_o'' are amended by revising the term ''kg TOC/hr'' to read ''kg/hr (lb/hr).''

b. In paragraph (b)(4)(iii), the definition of the terms ''Q_i, Q_o'' is amended by revising the units ''dscf/hr'' to read ''dscf/min.''

c. In paragraph (b)(4)(iii), the definition of the term ''K_2'' is revised.

d. Paragraphs (b)(5), (c), (d), (e), and (f) are redesignated as paragraphs (c), (d), (e), (f), and (g), respectively.

e. In newly redesignated paragraph (e)(1)(i), the second sentence is amended by revising ''§ 60.614(d)(2) and (3)'' to read ''§ 60.614(e)(2) and (3)'' and by revising the section reference ''(d)(1)(ii)'' to read ''(e)(1)(ii).''

f. In newly redesignated paragraph (e)(1)(i), the last sentence is amended by revising the words ''4 inches'' to read ''10 centimeters (4 inches).''

g. In newly redesignated paragraph (e)(1)(ii)(C), the second sentence is amended by revising ''§ 60.614(d)(4) and (5)'' to read ''§ 60.614(e)(4) and (5).''

h. Newly redesignated paragraph (e)(2)(ii) is amended by revising ''ASTM D1946–77'' to read ''D1946–77, or 90 (Reapproved 1994).''

i. In newly redesignated paragraphs (e)(4) and (e)(5), the definitions of the equation terms are revised.

j. Newly redesignated paragraphs (f)(1)(i), including Table 1, and (f)(1)(ii) are revised.

k. In newly redesignated paragraph (f)(2) the definitions of the equation terms and Table 2 are revised.

The revisions read as follows:

§ 60.614 Test methods and procedures.

* * * * *

(b) * * *

(4) * * *

(iii) * * *

$K_2 = 2.494 \times 10^{-6}$ (1/ppm)(g-mole/scm)(kg/g)(min/hr) (metric units), where standard temperature for (g-mole/scm) is 20°C.

$= 1.557 \times 10^{-7}$ (1/ppm)(lb-mole/scf)(min/hr) (English units), where standard temperature for (lb-mole/scf) is 68°F.

* * * * *

(e) * * *

(4) * * *

H_T = Net heating value of the sample, MJ/scm (Btu/scf), where the net enthalpy per mole of vent stream is based on combustion at 25°C and 760 mm Hg (77°F and 30 in. Hg), but the standard temperature for determining the volume corresponding to one mole is 20°C (68°F).

$K_1 = 1.74 \times 10^{-7}$ (1/ppm)(g-mole/scm)(MJ/kcal) (metric units), where standard temperature for (g-mole/scm) is 20°C.

$= 1.03 \times 10^{-11}$ (1/ppm)(lb-mole/scf)(Btu/kcal) (English units) where standard temperature for (lb/mole/scf) is 68°F.

C_j = Concentration on a wet basis of compound j in ppm, as measured for organics by Method 18 and measured for hydrogen and carbon monoxide by ASTM D1946–77, 90, or 94 (incorporation by reference as specified in § 60.17 of this part) as indicated in § 60.614(e)(2).

H_j = Net heat of combustion of compound j, kcal/(g-mole) [kcal/(lb-mole)], based on combustion at 25°C and 760 mm Hg (77 °F and 30 in. Hg).

(5) * * *

E_{TOC} = Measured emission rate of TOC, kg/hr (lb/hr).

$K_2 = 2.494 \times 10^{-6}$ (1/ppm)(g-mole/scm)(kg/g)(min/hr) (metric units), where standard temperature for (g-mole/scm) is 20°C.

$= 1.557 \times 10^{-7}$ (1/ppm)(lb-mole/scf)(min/hr) (English units), where standard temperature for (lb-mole/scf) is 68°F.

C_j = Concentration on a wet basis of compound j in ppm, as measured by Method 18 as indicated in § 60.614(e)(2).

M_j = Molecular weight of sample j, g/g-mole (lb/lb-mole).

Q_s = Vent stream flow rate, scm/hr (scf/hr), at a temperature of 20°C (68°F).

* * * * *

(f) * * *

(1) * * *

(i) Where for a vent stream flow rate that is greater than or equal to 14.2 scm/min (501 scf/min) at a standard temperature of 20 °C (68 °F):

TRE = TRE index value.

Q_s = Vent stream flow rate, scm/min (scf/min), at a temperature of 20°C (68 °F).

H_T = Vent stream net heating value, MJ/scm (Btu/scf), where the net enthalpy per mole of vent stream is

based on combustion at 25°C and 760 mm Hg (68°F and 30 in. Hg), but the standard temperature for determining the volume corresponding to one mole is 20°C (68°F) as in the definition of Q_s.

$Y_s = Q_s$ for all vent stream categories listed in Table 1 except for Category E vent streams where $Y_s = Q_s H_T/3.6$.

E_{TOC} = Hourly emissions of TOC, kg/hr (lb/hr). a, b, c, d, e, and f are coefficients.

The set of coefficients which apply to a vent stream shall be obtained from Table 1.

BILLING CODE 6560–50–P

TABLE 1. AIR OXIDATION NSPS TRE COEFFICIENTS FOR VENT STREAMS CONTROLLED BY AN INCINERATOR

DESIGN CATEGORY A1. FOR HALOGENATED PROCESS VENT STREAMS, IF 0 ≤ NET HEATING VALUE (MJ/scm) ≤ 3.5 OR IF 0 ≤ NET HEATING VALUE (Btu/scf) ≤ 94:

Q_S = Vent Stream Flow rate scm/min (scf/min)	a	b	c	d	e	f
$14.2 \le Q_S \le 18.8$	19.18370	0.27580	0.75762	-0.13064	0	0.01025
$(501 \le Q_S \le 664)$	(42.29238)	(0.017220)	(0.072549)	(-0.00030361)	(0)	(0.003803)
$18.8 < Q_S \le 699$	20.00563	0.27580	0.30387	-0.13064	0	0.01025
$(664 < Q_S \le 24{,}700)$	(44.10441)	(0.017220)	(0.029098)	(-0.00030361)	(0)	(0.003803)
$699 < Q_S \le 1400$	39.87022	0.29973	0.30387	-0.13064	0	0.01449
$(24{,}700 < Q_S \le 49{,}000)$	(87.89789)	(0.018714)	(0.029098)	(-0.00030361)	(0)	(0.005376)
$1400 < Q_S \le 2100$	59.73481	0.31467	0.30387	-0.13064	0	0.01775
$(49{,}000 < Q_S \le 74{,}000)$	(131.6914)	(0.019647)	(0.029098)	(-0.00030361)	(0)	(0.006585)
$2100 < Q_S \le 2800$	79.59941	0.32572	0.30387	-0.13064	0	0.02049
$(74{,}000 < Q_S \le 99{,}000)$	(175.4849)	(0.020337)	(0.029098)	(-0.00030361)	(0)	(0.007602)
$2800 < Q_S \le 3500$	99.46400	0.33456	0.30387	-0.13064	0	0.02291
$(99{,}000 < Q_S \le 120{,}000)$	(219.2783)	(0.020888)	(0.029098)	(-0.00030361)	(0)	(0.008500)

DESIGN CATEGORY A2. FOR HALOGENATED PROCESS VENT STREAMS, IF NET HEATING VALUE < 3.5 (MJ/scm) OR IF NET HEATING VALUE < 94 (Btu/scf):

Q_S = Vent Stream Flow rate scm/min(scf/min)	a	b	c	d	e	f
$14.2 \le Q_S \le 18.8$	18.84466	0.26742	-0.20044	0	0	0.01025
$(501 \le Q_S \le 664)$	(41.54494)	(0.016696)	(-0.019194)	(0)	(0)	(0.003803)
$18.8 < Q_S \le 699$	19.66658	0.26742	-0.25332	0	0	0.01025
$(664 < Q_S \le 24{,}700)$	(43.35694)	(0.016696)	(-0.024258)	(0)	(0)	(0.003803)
$699 < Q_S \le 1400$	39.19213	0.29062	-0.25332	0	0	0.01449
$(24{,}700 < Q_S \le 49{,}000)$	(86.40297)	(0.018145)	(-0.024258)	(0)	(0)	(0.005376)
$1400 < Q_S \le 2100$	58.71768	0.30511	-0.25332	0	0	0.01775
$(49{,}000 < Q_S \le 74{,}000)$	(129.4490)	(0.019050)	(-0.024258)	(0)	(0)	(0.006585)
$2100 < Q_S \le 2800$	78.24323	0.31582	-0.25332	0	0	0.02049
$(74{,}000 < Q_S \le 99{,}000)$	(172.4950)	(0.019718)	(-0.024258)	(0)	(0)	(0.007602)
$2800 < Q_S \le 3500$	97.76879	0.32439	-0.25332	0	0	0.02291
$(99{,}000 < Q_S \le 120{,}000)$	(215.5411)	(0.020253)	(-0.024258)	(0)	(0)	(0.008500)

DESIGN CATEGORY B. FOR NONHALOGENATED PROCESS VENT STREAMS, IF 0 ≤ NET HEATING VALUE (MJ/scm) ≤ 0.48 OR IF 0 ≤ NET HEATING VALUE (Btu/scf) ≤ 13:

Q_S = Vent Stream Flow rate scm/min(scf/min)	a	b	c	d	e	f
$14.2 \le Q_S \le 1340$	8.54245	0.10555	0.09030	-0.17109	0	0.01025
$(501 \le Q_S \le 47,300)$	(18.83268)	(0.0065901)	(0.008647)	(-0.00039762)	(0)	(0.003803)
$1340 < Q_S \le 2690$	16.94386	0.11470	0.09030	-0.17109	0	0.01449
$(47,300 < Q_S \le 95,000)$	(37.35443)	(0.0071614)	(0.008647)	(-0.00039762)	(0)	(0.005376)
$2690 < Q_S \le 4040$	25.34528	0.12042	0.09030	-0.17109	0	0.01775
$(95,000 < Q_S \le 143,000)$	(55.87620)	(0.0075185)	(0.008647)	(-0.00039762)	(0)	(0.00658

DESIGN CATEGORY C. FOR NONHALOGENTED PROCESS VENT STREAMS, IF 0.48 < NET HEATING VALUE (MJ/scm) ≤ 1.9 OR IF 13 < NET HEATING VALUE (Btu/scf) ≤ 51:

Q_S = Vent Stream Flow rate scm/min(scf/min)	a	b	c	d	e	f
$14.2 \le Q_S \le 1340$	9.25233	0.06105	0.31937	-0.16181	0	0.01025
$(501 \le Q_S \le 47,300)$	(20.39769)	(0.003812)	(0.030582)	(-0.00037605)	(0)	(0.003803)
$1340 < Q_S \le 2690$	18.36363	0.06635	0.31937	-0.16181	0	0.01449
$(47,300 < Q_S \le 95,000)$	(40.48446)	(0.004143)	(0.030582)	(-0.00037605)	(0)	(0.005376)
$2690 < Q_S \le 4040$	27.47492	0.06965	0.31937	-0.16181	0	0.01775
$(95,000 < Q_S \le 143,000)$	(60.57121)	(0.004349)	(0.030582)	(-0.00037605)	(0)	(0.006585)

DESIGN CATEGORY D. FOR NONHALOGENATED PROCESS VENT STREAMS, IF 1.9 < NET HEATING VALUE (MJ/scm) ≤ 3.6 OR IF 51 < NET HEATING VALUE (Btu/scf) ≤ 97:

Q_S = Vent Stream Flow rate scm/min(scf/min)	a	b	c	d	e	f
$14.2 \le Q_S \le 1180$	6.67868	0.06943	0.02582	0	0	0.01025
$(501 \le Q_S \le 41,700)$	(14.72382)	(0.004335)	(0.002472)	(0)	(0)	(0.003803)
$1180 < Q_S \le 2370$	13.21633	0.07546	0.02582	0	0	0.01449
$(41,700 < Q_S \le 83,700)$	(29.13672)	(0.004711)	(0.002472)	(0)	(0)	(0.005376)
$2370 < Q_S \le 3550$	19.75398	0.07922	0.02582	0	0	0.01775
$(83,700 < Q_S \le 125,000)$	(43.54962)	(0.004946)	(0.002472)	(0)	(0)	(0.00658

Q_S = Vent Stream Flow rate scm/min(scf/min)	a	b	c	d	e	f
$14.2 \le Y_S \le 1180$	6.67868	0	0	-0.00707	0.02220	0.01025
$(501 \le Y_S \le 41,700)$	(14.72382)	(0)	(0)	(-0.0000164)	(0.0001174)	(0.003803)
$1180 < Y_S \le 2370$	13.21633	0	0	-0.00707	0.02412	0.01449
$(41,700 < Y_S \le 83,700)$	(29.13672)	(0)	(0)	(-0.0000164)	(0.0001276)	(0.005376)
$2370 < Y_S \le 3550$	19.75398	0	0	-0.00707	0.02533	0.01775
$(83,700 < Y_S \le 125,000)$	(43.54962)	(0)	(0)	(-0.0000164)	(0.0001340)	(0.006585)

BILLING CODE 6560–50–C

(ii) Where for a vent stream flow rate that is less than 14.2 scm/min (501 scf/min) at a standard temperature of 20°C (68°F):

TRE = TRE index value.

Q_s = 14.2 scm/min (501 scf/min).

H_T = (FLOW)(HVAL)/Q_s.

Where the following inputs are used:

FLOW = Vent stream flow rate, scm/min (scf/min), at a temperature of 20 °C (68 °F).

HVAL = Vent stream net heating value, MJ/scm (Btu/scf), where the net enthalpy per mole of vent stream is based on combustion at 25 °C and 760 mm Hg (68 °F and 30 in. Hg), but the standard temperature for determining the volume corresponding to one mole is 20 °C (68 °F) as in the definition of Q_s.

Y_s = Q_s for all vent stream categories listed in Table 1 except for Category E vent streams where $Y_s = Q_s H_T/3.6$.

E_{TOC} = Hourly emissions of TOC, kg/hr (lb/hr).

a, b, c, d, e, and f are coefficients.

The set of coefficients that apply to a vent stream can be obtained from Table 1.

(2) * * *

TRE = TRE index value.

E_{TOC} = Hourly emissions of TOC, kg/hr (lb/hr).

Q_s = Vent stream flow rate, scm/min (scf/min), at a standard temperature of 20 °C (68 °F).

H_T = Vent stream net heating value, MJ/scm (Btu/scf), where the net enthalpy per mole of vent stream is based on combustion at 25 °C and 760 mm Hg (68 °F and 30 in. Hg), but the standard temperature for determining the volume corresponding to one mole is 20 °C (68 °F) as in the definition of Q_s.

a, b, c, d, and e are coefficients.

* * * * *

TABLE 2.—AIR OXIDATION PROCESSES NSPS TRE COEFFICIENTS FOR VENT STREAMS CONTROLLED BY A FLARE

	a	b	c	d	e
H_T < 11.2 MJ/scm	2.25	0.288	−0.193	(−0.0051	2.08
(H_T < 301 Btu/scf)	(0.140)	(0.0367)	(−0.000448)	(−0.0051)	(4.59)
H_T ≥ 11.2 MJ/scm	0.309	0.0619	−0.0043	−0.0034	2.08
H_T ≥ 301 Btu/scf)	(0.0193)	(0.00788)	(−0.000010)	(−0.0034)	(4.59)

* * * * *

§ 60.615 [Amended]

193. Amend § 60.615 as follows:

a. In paragraph (e), the first sentence is amended by revising the words ''44 MW'' to read ''44 MW (150 million Btu/hour).''

b. In paragraph (g), the first sentence is amended by revising ''§ 60.613(c)'' to read ''§ 60.613(e).''

§ 60.620 [Amended]

194. In § 60.620, paragraph (b), the second sentence is amended by revising the words ''4,700 gallons'' to read ''17,791 liters (4,700 gallons).''

§ 60.624 [Amended]

195. In § 60.624, the third sentence is amended by revising the words ''is from the outlet'' to read ''is the outlet.''

§ 60.632 [Amended]

196. Amend § 60.632 as follows:

a. In paragraph (f), the second sentence is amended by revising the words ''percent VOC content'' to read ''VOC content.''

b. Paragraph (f) is amended by revising ''ASTM Methods E169, E168, or E260'' to read ''ASTM E169–63, 77, or 93, E168–67, 77, or 92, or E260–73, 91, or 96.''

§ 60.633 [Amended]

197. Amend § 60.633 as follows:

a. Paragraph (b)(4)(i) is amended by revising ''§ 60.482–(b)(1)'' to read ''§ 60.482–4(b)(1).''

b. Paragraph (d) is amended by revising the words ''283,000 standard cubic meters per day (scmd) (10 million standard cubic feet per day (scfd))'' to read ''283,200 standard cubic meters per day (10 million standard cubic feet per day).''

c. Paragraphs (h)(1) and (2) are amended by revising the words ''at 150 °C'' to read ''at 150 °C (302 °F).''

d. Paragraphs (h)(1) and (2) are amended by revising the words ''ASTM Method D86'' to read ''ASTM Method D86–78, 82, 90, 95, or 96.''

§ 60.641 [Amended]

198. Amend § 60.641 as follows:

a. The definition for ''Total SO_2'' is amended by revising the words ''(ppmv or kg/DSCM)'' to read ''(ppmv or kg/dscm (lb/dscf)).''

b. The definitions for ''E'', ''S'', and ''X'' are amended to read as follows:

§ 60.641 Definitions.

* * * * *

E = The sulfur emission rate expressed as elemental sulfur, kilograms per hour (kg/hr) [pounds per hour (lb/hr)], rounded to one decimal place.

* * * * *

S = The sulfur production rate, kilograms per hour (kg/hr) [pounds per hour (lb/hr)], rounded to one decimal place.

X = The sulfur feed rate from the sweetening unit (i.e., the H_2S in the acid gas), expressed as sulfur, Mg/D(LT/D), rounded to one decimal place.

* * * * *

§ 60.644 [Amended]

199. Amend § 60.644 as follows:

a. Paragraphs (b)(1), (c)(3), and (c)(4)(iii) are revised.

b. In paragraph (b)(2), the first sentence is amended by revising the words ''dscf/day'' to read ''dscm/day (dscf/day).''

c. In paragraph (c)(2), the second sentence is amended by revising the words ''kg/hr'' to read ''kg/hr (lb/hr).''

d. In the paragraph (c)(4) introductory text, the first sentence is revised.

e. Paragraph (c)(4)(i) is amended by deleting the words ''in mg/dscm'' in the third sentence and by revising the last sentence.

f. In paragraph (c)(4)(ii), the last sentence is revised.

g. In paragraph (c)(4)(iv), the fifth sentence is amended by revising the words ''(0.35 dscf)'' to read ''(3.5 dscf).''

h. Paragraph (d) is amended by revising the words ''(b) of (c)'' to read ''(b) or (c).''

The revisions read as follows:

§ 60.644 Test methods and procedures.

* * * * *

(b) * * *

(1) The average sulfur feed rate (X) shall be computed as follows:

$$X = KQ_a Y$$

Where:

X = average sulfur feed rate, Mg/D (LT/D).

Q_a = average volumetric flow rate of acid gas from sweetening unit, dscm/day (dscf/day).

Y = average H_2S concentration in acid gas feed from sweetening unit, percent by volume, expressed as a decimal.

K = (32 kg S/kg-mole)/((24.04 dscm/kg-mole)(1000 kg S/ Mg)) = 1.331×10^{-3} Mg/dscm, for metric units
= (32 lb S/lb-mole)/((385.36 dscf/lb-mole)(2240 lb S/long ton))
= 3.707×10^{-5} long ton/dscf, for English units.

* * * * *

(c) * * *

(3) The emission rate of sulfur shall be computed for each run as follows:

$$E = C_e Q_{sd} / K_1$$

Where:

E = emission rate of sulfur per run, kg/hr.

C_e = concentration of sulfur equivalent (SO_2 + reduced sulfur), g/dscm (lb/dscf).

Q_{sd} = volumetric flow rate of effluent gas, dscm/hr (dscf/hr).

K_1 = conversion factor, 1000 g/kg (7000 gr/lb).

(4) The concentration of sulfur equivalent (C_e) shall be the sum of the SO_2 and reduced sulfur concentrations, after being converted to sulfur equivalents. * * *

(i) * * * The concentration shall be multiplied by 0.5×10^{-3} to convert the results to sulfur equivalent.

(ii) * * * The concentration in ppm reduced sulfur as sulfur shall be multiplied by 1.333×10^{-3} to convert the results to sulfur equivalent.

(iii) Method 16A or 15 shall be used to determine the reduced sulfur concentration from oxidation-type devices or where the oxygen content of the effluent gas is greater than 1.0 percent by volume. Eight samples of 20 minutes each shall be taken at 30-minute intervals. The arithmetic average shall be the concentration for the run. The concentration in ppm reduced sulfur as sulfur shall be multiplied by 1.333×10^{-3} to convert the results to sulfur equivalent.

* * * * *

§ 60.646 [Amended]

200. Amend § 60.646 as follows:

a. In paragraph (b)(1), the second sentence is amended by revising the words ''(kg/hr)'' to read ''(kg/hr (lb/hr)).''

b. In paragraph (c), the second sentence is amended by revising the words ''(kg/hr)'' to read ''(kg/hr (lb/hr)).''

c. In paragraph (e), the first sentence is amended by revising the words ''150 LT/D'' to read ''152 Mg/D (150 LT/D).''

d. In paragraph (e), the equation and definitions are amended by revising as follows:

§ 60.646 Monitoring of emissions and operations.

* * * * *

(e) * * *

$$R = \frac{K_2 S}{X}$$

Where:

R = The sulfur dioxide removal efficiency achieved during the 24-hour period, percent.

K_2 = Conversion factor, 0.02400 Mg/D per kg/hr (0.01071 LT/D per lb/hr).

S = The sulfur production rate during the 24-hour period, kg/hr (lb/hr).

X = The sulfur feed rate in the acid gas, Mg/D (LT/D).

* * * * *

§ 60.663 [Amended]

201. Amend § 60.663 as follows:

a. In paragraph (c) introductory text by revising the words ''in the following equipment'' to read ''the following equipment.''

b. Paragraphs (d) and (e) are redesignated as (e) and (f) and paragraph (c)(3) is redesignated as paragraph (d).

c. In newly redesignated paragraph (f) by revising the words ''carbon absorber'' to read ''carbon adsorber.''

§ 60.664 [Amended]

202. Amend § 60.664 as follows:

a. In paragraph (b)(4)(ii), the definitions of the terms ''E_i'' and ''E_o'' are amended by revising the term ''kg TOC/hr'' to read ''kg/hr (lb/hr).''

b. In paragraph (b)(4)(iii), the definitions of the terms ''Q_i'' and ''Q_o'' are amended by revising the units ''dscf/hr'' to read ''dscf/min.''

c. In paragraph (b)(4)(iii), the definition of the term ''K_2'' is revised.

d. Paragraphs (b)(5), (c), (d), (e), (f), and (g) are redesignated as paragraphs (c), (d), (e), (f), (g), and (h), respectively.

e. In newly redesignated paragraph (e)(1)(i), the second sentence is amended by revising ''§ 60.664(d)(2) and (3)'' to read ''§ 60.664(e)(2) and (3).''

f. In newly redesignated paragraph (e)(1)(i), the second sentence is amended by revising ''(d)(1)(ii)'' to read ''(e)(1)(ii).''

g. In newly redesignated paragraph (e)(1)(i), the third sentence is amended by revising the words ''4 inches'' to read ''10 centimeters (4 inches).''

h. In newly redesignated paragraph (e)(1)(ii)(C), the second sentence is amended by revising ''§ 60.664(d)(4) and (5)'' to read ''§ 60.664(e)(4) and (5).''

i. Newly redesignated paragraph (e)(2)(ii) is amended by revising ''ASTM D1946–77'' to read ''ASTM D1946–77 or 90 (Reapproved 1994).''

j. In newly redesignated paragraphs (e)(4), (e)(5) and (f)(2), the equation definitions are revised; and newly redesignated paragraphs (f)(1)(i), (f)(1)(ii) including Table 1, and Table 2 of (f)(2)are revised.

k. The last sentence in the newly redesignated paragraph (e)(4) is amended by revising ''ASTM D2382–76'' to read ''ASTM D2382–76 or 88 or D4809–95.''

The revisions read as follows:

§ 60.664 Test methods and procedures.

* * * * *

(b) * * *

(4) * * *

(iii) * * *

$K_2 = 2.494 \times 10^{-6}$ (1/ppm)(g-mole/scm) (kg/g) (min/hr) (metric units), where standard temperature for (g-mole/scm) is 20 °C.
= 1.557×10^{-7} (1/ppm) (lb-mole/scf) (min/hr) (English units), where standard temperature for (lb-mole/scf) is 68 °F.

* * * * *

(e) * * *

(4) * * *

H_T = Net heating value of the sample, MJ/scm (Btu/scf), where the net enthalpy per mole of vent stream is based on combustion at 25 °C and 760 mm Hg (77 °F and 30 in. Hg), but the standard temperature for determining the volume corresponding to one mole is 20 °C (68 °F).

$K_1 = 1.74 \times 10^{-7}$ (1/ppm) (g-mole/scm) (MJ/kcal) (metric units), where standard temperature for (g-mole/scm) is 20 °C.
= 1.03×10^{-11} (1/ppm) (lb-mole/scf) (Btu/kcal) (English units) where standard temperature for (lb/mole/scf) is 68 °F.

C_j = Concentration on a wet basis of compound j in ppm, as measured for organics by Method 18 and measured for hydrogen and carbon monoxide by ASTM D1946–77 or 90 (Reapproved 1994) (incorporation by reference as specified in § 60.17 of this part) as indicated in § 60.664(e)(2).

H_j = Net heat of combustion of compound j, kcal/(g-mole) [kcal/(lb-mole)], based on combustion at 25 °C and 760 mm Hg (77 °F and 30 in. Hg).

* * * * *

(5) * * *

E_{TOC} = Measured emission rate of TOC, kg/hr (lb/hr).

$K_2 = 2.494 \times 10^{-6}$ (1/ppm) (g-mole/scm) (kg/g) (min/hr) (metric units), where standard temperature for (g-mole/scm) is 20 °C.
= 1.557×10^{-7} (1/ppm) (lb-mole/scf) (min/hr) (English units), where

standard temperature for (lb-mole/scf) is 68 °F.

C_j = Concentration on a wet basis of compound j in ppm, as measured by Method 18 as indicated in § 60.664(e)(2).

M_j = Molecular weight of sample j, g/g-mole (lb/lb-mole).

Q_s = Vent stream flow rate, scm/min (scf/min), at a temperature of 20 °C (68 °F).

* * * * *

(f) * * *

(1) * * *

(i) Where for a vent stream flow rate that is greater than or equal to 14.2 scm/min (501 scf/min) at a standard temperature of 20 °C (68 °F):

TRE = TRE index value.

Q_s = Vent stream flow rate, scm/min (scf/min), at a temperature of 20 °C (68 °F).

H_T = Vent stream net heating value, MJ/scm (Btu/scf), where the net enthalpy per mole of vent stream is based on combustion at 25 °C and 760 mm Hg (68 °F and 30 in. Hg), but the standard temperature for determining the volume corresponding to one mole is 20 °C (68 °F) as in the definition of Q_s.

Y_s = Q_s for all vent stream categories listed in Table 1 except for Category E vent streams where $Y_s = Q_s H_T/3.6$.

E_{TOC} = Hourly emissions of TOC, kg/hr (lb/hr).

a, b, c, d, e, and f are coefficients.

The set of coefficients that apply to a vent stream can be obtained from Table 1.

BILLING CODE 6560–50–P

TABLE 1. DISTILLATION NSPS TRE COEFFICIENTS FOR VENT STREAMS CONTROLLED BY AN INCINERATOR

DESIGN CATEGORY A1. FOR HALOGENATED PROCESS VENT STREAMS, IF 0 ≤ NET HEATING VALUE (MJ/scm) ≤ 3.5 OR IF 0 ≤ NET HEATING VALUE (Btu/scf) ≤ 94:

Q_S = Vent Stream Flow rate scm/min (scf/min)	a	b	c	d	e	f
$14.2 \le Q_S \le 18.8$	18.84466	0.26742	-0.20044	0	0	0.01025
$(501 \le Q_S \le 664)$	(41.54494)	(0.016696)	(-0.019194)	(0)	(0)	(0.003803)
$18.8 < Q_S \le 699$	19.66658	0.26742	-0.25332	0	0	0.01025
$(664 < Q_S \le 24{,}700)$	(43.35694)	(0.016696)	(-0.024258)	(0)	(0)	(0.003803)
$699 < Q_S \le 1400$	39.19213	0.29062	-0.25332	0	0	0.01449
$(24{,}700 < Q_S \le 49{,}000)$	(86.40297)	(0.018145)	(-0.024258)	(0)	(0)	(0.005376)
$1400 < Q_S \le 2100$	58.71768	0.30511	-0.25332	0	0	0.01775
$(49{,}000 < Q_S \le 74{,}000)$	(129.4490)	(0.019050)	(-0.024258)	(0)	(0)	(0.006585)
$2100 < Q_S \le 2800$	78.24323	0.31582	-0.25332	0	0	0.02049
$(74{,}000 < Q_S \le 99{,}000)$	(172.4950)	(0.019718)	(-0.024258)	(0)	(0)	(0.007602)
$2800 < Q_S \le 3500$	97.76879	0.32439	-0.25332	0	0	0.02291
$(99{,}000 < Q_S \le 120{,}000)$	(215.5411)	(0.020253)	(-0.024258)	(0)	(0)	(0.008500)

DESIGN CATEGORY A2. FOR HALOGENATED PROCESS VENT STREAMS, IF NET HEATING VALUE < 3.5 (MJ/scm) OR IF NET HEATING VALUE < 94 (Btu/scf):

Q_S = Vent Stream Flow rate scm/min(scf/min)	a	b	c	d	e	f
$14.2 \leq Q_S \leq 18.8$	18.84466	0.26742	-0.20044	0	0	0.01025
$(501 \leq Q_S \leq 664)$	(41.54494)	(0.016696)	(-0.019194)	(0)	(0)	(0.003803)
$18.8 < Q_S \leq 699$	19.66658	0.26742	-0.25332	0	0	0.01025
$(664 < Q_S \leq 24{,}700)$	(43.35694)	(0.016696)	(-0.024258)	(0)	(0)	(0.003803)
$699 < Q_S \leq 1400$	39.19213	0.29062	-0.25332	0	0	0.01449
$(24{,}700 < Q_S \leq 49{,}000)$	(86.40297)	(0.018145)	(-0.024258)	(0)	(0)	(0.005376)
$1400 < Q_S \leq 2100$	58.71768	0.30511	-0.25332	0	0	0.01775
$(49{,}000 < Q_S \leq 74{,}000)$	(129.4490)	(0.019050)	(-0.024258)	(0)	(0)	(0.006585)
$2100 < Q_S \leq 2800$	78.24323	0.31582	-0.25332	0	0	0.02049
$(74{,}000 < Q_S \leq 99{,}000)$	(172.4950)	(0.019718)	(-0.024258)	(0)	(0)	(0.007602)
$2800 < Q_S \leq 3500$	97.76879	0.32439	-0.25332	0	0	0.02291
$(99{,}000 < Q_S \leq 120{,}000)$	(215.5411)	(0.020253)	(-0.024258)	(0)	(0)	(0.008500)

DESIGN CATEGORY B. FOR NONHALOGENATED PROCESS VENT STREAMS, IF $0 \leq$ NET HEATING VALUE (MJ/scm) ≤ 0.48 OR IF $0 \leq$ NET HEATING VALUE (Btu/scf) ≤ 13:

Q_S = Vent Stream Flow rate scm/min(scf/min)	a	b	c	d	e	f
$14.2 \leq Q_S \leq 1340$	8.54245	0.10555	0.09030	-0.17109	0	0.01025
$(501 \leq Q_S \leq 47{,}300)$	(18.83268)	(0.0065901)	(0.008647)	(-0.00039762)	(0)	(0.003803)
$1340 < Q_S \leq 2690$	16.94386	0.11470	0.09030	-0.17109	0	0.01449
$(47{,}300 < Q_S \leq 95{,}000)$	(37.35443)	(0.0071614)	(0.008647)	(-0.00039762)	(0)	(0.005376)
$2690 < Q_S \leq 4040$	25.34528	0.12042	0.09030	-0.17109	0	0.01775
$(95{,}000 < Q_S \leq 143{,}000)$	(55.87620)	(0.0075185)	(0.008647)	(-0.00039762)	(0)	(0.006585)

DESIGN CATEGORY C. FOR NONHALOGENTED PROCESS VENT STREAMS, IF 0.48 < NET HEATING VALUE (MJ/scm) ≤ 1.9 OR IF 13 < NET HEATING VALUE (Btu/scf) ≤ 51:

Q_S = Vent Stream Flow rate scm/min(scf/min)	a	b	c	d	e	f
$14.2 \le Q_S \le 1340$	9.25233	0.06105	0.31937	-0.16181	0	0.01025
$(501 \le Q_S \le 47,300)$	(20.39769)	(0.003812)	(0.030582)	(-0.00037605)	(0)	(0.003803)
$1340 < Q_S \le 2690$	18.36363	0.06635	0.31937	-0.16181	0	0.01449
$(47,300 < Q_S \le 95,000)$	(40.48446)	(0.004143)	(0.030582)	(-0.00037605)	(0)	(0.005376)
$2690 < Q_S \le 4040$	27.47492	0.06965	0.31937	-0.16181	0	0.01775
$(95,000 < Q_S \le 143,000)$	(60.57121)	(0.004349)	(0.030582)	(-0.00037605)	(0)	(0.006585)

DESIGN CATEGORY D. FOR NONHALOGENATED PROCESS VENT STREAMS, IF 1.9 < NET HEATING VALUE (MJ/scm) ≤ 3.6 OR IF 51 < NET HEATING VALUE (Btu/scf) ≤ 97:

Q_S = Vent Stream Flow rate scm/min(scf/min)	a	b	c	d	e	f
$14.2 \le Q_S \le 1180$	6.67868	0.06943	0.02582	0	0	0.01025
$(501 \le Q_S \le 41,700)$	(14.72382)	(0.004335)	(0.002472)	(0)	(0)	(0.003803)
$1180 < Q_S \le 2370$	13.21633	0.07546	0.02582	0	0	0.01449
$(41,700 < Q_S \le 83,700)$	(29.13672)	(0.004711)	(0.002472)	(0)	(0)	(0.005376)
$2370 < Q_S \le 3550$	19.75398	0.07922	0.02582	0	0	0.01775
$(83,700 < Q_S \le 125,000)$	(43.54962)	(0.004946)	(0.002472)	(0)	(0)	(0.006585)

DESIGN CATEGORY E. FOR NONHALOGENATED PROCESS VENT STREAMS, IF NET HEATING VALUE > 3.6 MJ/scm OR IF NET HEATING VALUE > 97 (Btu/scf):

Q_S = Vent Stream Flow rate scm/min(scf/min)	a	b	c	d	e	f
$14.2 \le Y_S \le 1180$	6.67868	0	0	-0.00707	0.02220	0.01025
$(501 \le Y_S \le 41,700)$	(14.72382)	(0)	(0)	(-0.0000164)	(0.0001174)	(0.003803)
$1180 < Y_S \le 2370$	13.21633	0	0	-0.00707	0.02412	0.01449
$(41,700 < Y_S \le 83,700)$	(29.13672)	(0)	(0)	(-0.0000164)	(0.0001276)	(0.005376)
$2370 < Y_S \le 3550$	19.75398	0	0	-0.00707	0.02533	0.01775
$(83,700 < Y_S \le 125,000)$	(43.54962)	(0)	(0)	(-0.0000164)	(0.0001340)	(0.006585)

BILLING CODE 6560–50–C

(ii) Where for a vent stream flow rate that is less than 14.2 scm/min (501 scf/min) at a standard temperature of 20 °C (68 °F):

TRE = TRE index value.

Q_s = 14.2 scm/min (501 scf/min).

H_T = (FLOW) (HVAL)/Q_s.

Where the following inputs are used:

FLOW = Vent stream flow rate, scm/min (scf/min), at a temperature of 20 °C (68 °F).

HVAL = Vent stream net heating value, MJ/scm (Btu/scf), where the net enthalpy per mole of vent stream is based on combustion at 25 °C and 760 mm Hg (68 °F and 30 in. Hg), but the standard temperature for determining the volume corresponding to one mole is 20 °C (68 °F) as in the definition of Q_s.

Y_s = Q_s for all vent stream categories listed in Table 1 except for Category E vent streams where $Y_s = Q_s H_T/3.6$.

E_{TOC} = Hourly emissions of TOC, kg/hr (lb/hr).

a, b, c, d, e, and f are coefficients

The set of coefficients that apply to a vent stream can be obtained from Table 1.

(2) * * *

TRE = TRE index value.

E_{TOC} = Hourly emissions of TOC, kg/hr (lb/hr).

Q_s = Vent stream flow rate, scm/min (scf/min), at a standard temperature of 20 °C (68 °F).

H_T = Vent stream net heating value, MJ/scm (Btu/scf), where the net enthalpy per mole of vent stream is based on combustion at 25 °C and 760 mm Hg (68 °F and 30 in. Hg), but the standard temperature for determining the volume corresponding to one mole is 20 °C (68 °F) as in the definition of Q_s.

a, b, c, d, and e are coefficients.

* * * * *

TABLE 2.—DISTILLATION NSPS TRE COEFFICIENTS FOR VENT STREAMS CONTROLLED BY A FLARE

	a	b	c	d	e
H_T < 11.2 MJ/scm	2.25	0.288	−0.193	−0.0051	2.08
(H_T < 301 Btu/scf)	(0.140)	(0.0367)	(−0.000448)	(−0.0051)	(4.59)
H_T ≥ 11.2 MJ/scm	0.309	0.0619	−0.0043	−0.0034	2.08
(H_T ≥ 301 Btu/scf)	(0.0193)	(0.00788)	(−0.0000010)	(−0.0034)	(4.59)

* * * * *

§ 60.665 [Amended]

203. Amend § 60.665 as follows:

a. Paragraph (b)(4)(i) is amended by revising the word ''adsorbing'' to read ''absorbing.''

b. In paragraph (e), the first sentence is amended by revising the words ''44 MW'' to read ''44 MW (150 million Btu/hour).''

c. In paragraph (g), the first sentence is amended by revising the section reference ''§ 60.663(d)'' to read ''§ 60.663(e).''

d. Paragraph (i) is amended by revising the words ''0.008 m^3/min'' to read ''0.008 scm/min (0.3 scf/min).''

e. In paragraph (l)(6), the fourth sentence is amended by revising the words ''vent stream flow rate, heating value, E_{TOC}'' to read ''vent stream flow rate, heating value, and E_{TOC}.''

f. Paragraph (n) is amended by revising the word ''capcity'' to read ''capacity.''

§ 60.672 [Amended]

204. In § 60.672, paragraph (a)(1) is amended by revising the words ''0.05 g/dscm'' to read ''0.05 g/dscm (0.022 gr/dscf).''

§ 60.676 [Amended]

205. In § 60.676, paragraphs (a)(1)(i), (a)(4)(i), and (a)(4)(ii) are amended by revising the word ''tons'' to read ''megagrams or tons'' wherever it occurs.

§ 60.685 [Amended]

206. Amend § 60.685 as follows:

a. In paragraph (c)(1), the equation definitions are revised.

b. In paragraph (c)(2) by revising the words ''2.55 dscm (90 dscf)'' to read ''2.55 dscm (90.1 dscf).''

c. In paragraph (c)(3)(i) by revising the words ''ASTM Standard Test Method D2584–68 (Reapproved 1979)'' to read ''ASTM D2584–68 (Reapproved 1985) or 94.''

The revisions read as follows:

§ 60.685 Test methods and procedures.

* * * * *

(c) * * *

(1) * * *

E = emission rate of particulate matter, kg/Mg (lb/ton).

C_t = concentration of particulate matter, g/dscm (gr/dscf).

Q_{sd} = volumetric flow rate of effluent gas, dscm/hr (dscf/hr).

P_{avg} = average glass pull rate, Mg/hr (ton/hr).

K = 1,000 g/kg (7,000 gr/lb).

* * * * *

§ 60.692–3 [Amended]

207. In § 60.692–3, paragraph (b) is amended by revising the words ''16 liters per second (250 gpm)'' to read ''16 liters per second (250 gallons per minute (gpm)).''

§ 60.695 [Amended]

208. In § 60.695, paragraphs (a)(1) and (2) are amended by revising the words ''an accuracy of 1 percent of the temperature being measured in °C or ±0.5 °C (±1.0 °F), whichever is greater'' to read ''an accuracy of ±1 percent of the temperature being measured, expressed in °C, or ±0.5 °C (0.9 °F), whichever is greater.''

§ 60.697 [Amended]

209. Amend § 60.697 by adding paragraph (k) as follows:

§ 60.697 Recordkeeping requirements.

* * * * *

(k) For oil-water separators subject to § 60.693–2, the location, date, and corrective action shall be recorded for inspections required by §§ 60.693–2(a)(1)(iii)(A) and (B), and shall be maintained for the time period specified in paragraphs (k)(1) and (2) of this section.

(1) For inspections required by § 60.693-2(a)(1)(iii)(A), ten years after the information is recorded.

(2) For inspections required by § 60.693–2(a)(1)(iii)(B), two years after the information is recorded.

§ 60.704 [Amended]

210. Amend § 60.704 as follows:

a. Paragraph (d)(2)(ii) is amended by revising ''ASTM D1946–77'' to read ''ASTM D1946–77 or 90 (Reapproved 1994).''

b. The definition of ''C_j'' in paragraph (d)(4) is amended by revising ''ASTM D1946–77'' to read ''ASTM D1946–77 or 90 (Reapproved 1994).''

c. The definition of ''H_j'' in paragraph (d)(4) is amended by revising ''ASTM D2382–76'' to read ''ASTM D2382–76 or 88 or D4809–95.''

§ 60.723 [Amended]

211. In § 60.723, paragraph (b)(1) is amended by revising the words ''Reference Method'' to read ''Method'' wherever they occur.

§ 60.724 [Amended]

212. In § 60.724, paragraph (a)(2) is amended by revising the words ''Reference Method'' to read ''Method.''

§ 60.732 [Amended]

213. In § 60.732, paragraph (a) is amended by revising the words ''0.057 g/dscm for dryers'' to read ''0.057 g/dscm (0.025 gr/dscf) for dryers.''

§ 60.753 [Amended]

214. In § 60.753, paragraph (c)(2) introductory text is amended by revising the words ''Method 3A'' to read ''Method 3A or 3C.''

§ 60.754 [Amended]

215. Amend § 60.754 as follows;

a. In paragraphs (a)(1)(i) and (a)(1)(ii), the equations are amended by revising ''$C_{NM}OC$'' to read ''C_{NMOC}.''

b. In paragraph (a)(3), the introductory text is revised; and in paragraph (d), the first sentence is removed and three sentences are added in its place to read as follows:

§ 60.754 Test methods and procedures.

(a) * * *

(3) *Tier 2.* The landfill owner or operator shall determine the NMOC concentration using the following sampling procedure. The landfill owner or operator shall install at least two sample probes per hectare of landfill surface that has retained waste for at least 2 years. If the landfill is larger than 25 hectares in area, only 50 samples are required. The sample probes should be located to avoid known areas of nondegradable solid waste. The owner or operator shall collect and analyze one sample of landfill gas from each probe to determine the NMOC concentration using Method 25 or 25C of Appendix A of this part. Method 18 of Appendix A of this part may be used to analyze the samples collected by the Method 25 or 25C sampling procedure. Taking composite samples from different probes into a single cylinder is allowed; however, equal sample volumes must be taken from each probe. For each composite, the sampling rate, collection times, beginning and ending cylinder vacuums, or alternative volume measurements must be recorded to verify that composite volumes are equal. Composite sample volumes should not be less than one liter unless evidence can be provided to substantiate the accuracy of smaller volumes. Terminate compositing before the cylinder approaches ambient pressure where measurement accuracy diminishes. If using Method 18, the owner or operator must identify all compounds in the sample and, as a minimum, test for those compounds published in the most recent Compilation of Air Pollutant Emission Factors (AP–42), minus carbon monoxide, hydrogen sulfide, and mercury. As a minimum, the instrument must be calibrated for each of the compounds on the list. Convert the concentration of each Method 18 compound to C_{NMOC} as hexane by multiplying by the ratio of its carbon atoms divided by six. If more than the required number of samples are taken, all samples must be used in the analysis. The landfill owner or operator must divide the NMOC concentration from Method 25 or 25C of Appendix A of this part by six to convert from C_{NMOC} as carbon to C_{NMOC} as hexane. If the landfill has an active or passive gas removal system in place, Method 25 or 25C samples may be collected from these systems instead of surface probes provided the removal system can be shown to provide sampling as representative as the two sampling probe per hectare requirement. For active collection systems, samples may be collected from the common header pipe before the gas moving or condensate removal equipment. For these systems, a minimum of three samples must be collected from the header pipe.

* * * * *

(d) For the performance test required in § 60.752(b)(2)(iii)(B), Method 25, 25C, or Method 18 of Appendix A of this part must be used to determine compliance with the 98 weight-percent efficiency or the 20 ppmv outlet concentration level, unless another method to demonstrate compliance has been approved by the Administrator as provided by § 60.752(b)(2)(i)(B). Method 3 or 3A shall be used to determine oxygen for correcting the NMOC concentration as hexane to 3 percent. In cases where the outlet concentration is less than 50 ppm NMOC as carbon (8 ppm NMOC as hexane), Method 25A should be used in place of Method 25. * * *

* * * * *

216. In Part 60, Appendix A is amended by revising Methods 1, 1A, 2, 2A, 2B, 2C, 2D, 2E, 3, 3B, 4, 5, 5A, 5B, 5D, 5E, 5F, 5G, 5H, 6, 6A, 6B, 7, 7A, 7B, 7C, 7D, 8, 10A, 10B, 11, 12, 13A, 13B, 14, 15, 15A, 16, 16A, 16B, 17, 18, 19, 21, 22, 24, 24A, 25, 25A, 25B, 25C, 25D, 25E, 26, 26A, 27, 28, 28A, and 29 to read as follows:

METHOD 1—Sample and Velocity Traverses for Stationary Sources

Note: This method does not include all of the specifications (*e.g.,* equipment and supplies) and procedures (*e.g.,* sampling) essential to its performance. Some material is incorporated by reference from other methods in this part. Therefore, to obtain reliable results, persons using this method should have a thorough knowledge of at least the following additional test method: Method 2.

1.0 Scope and Application

1.1 Measured Parameters. The purpose of the method is to provide guidance for the selection of sampling ports and traverse points at which sampling for air pollutants will be performed pursuant to regulations set forth in this part. Two procedures are presented: a simplified procedure, and an alternative procedure (see Section 11.5). The magnitude of cyclonic flow of effluent gas in a stack or duct is the only parameter quantitatively measured in the simplified procedure.

1.2 Applicability. This method is applicable to gas streams flowing in ducts, stacks, and flues. This method cannot be used when: (1) the flow is cyclonic or swirling; or (2) a stack is smaller than 0.30 meter (12 in.) in diameter, or 0.071 m^2 (113 $in.^2$) in cross-sectional area. The simplified procedure cannot be used when the measurement site is less than two stack or duct diameters downstream or less than a half diameter upstream from a flow disturbance.

1.3 Data Quality Objectives. Adherence to the requirements of this method will enhance the quality of the data obtained from air pollutant sampling methods.

Note: The requirements of this method must be considered before construction of a new facility from which emissions are to be measured; failure to do so may require subsequent alterations to the stack or deviation from the standard procedure. Cases involving variants are subject to approval by the Administrator.

2.0 Summary of Method

2.1 This method is designed to aid in the representative measurement of pollutant emissions and/or total volumetric flow rate from a stationary source. A measurement site where the effluent stream is flowing in a known direction is selected, and the cross-section of the stack is divided into a number of equal areas. Traverse points are then located within each of these equal areas.

3.0 Definitions [Reserved]

4.0 Interferences [Reserved]

5.0 Safety

5.1 Disclaimer. This method may involve hazardous materials, operations, and equipment. This test method may not address all of the safety problems associated with its use. It is the responsibility of the user of this test method to establish appropriate safety and health practices and determine the applicability of regulatory limitations prior to performing this test method.

6.0 Equipment and Supplies.

6.1 Apparatus. The apparatus described below is required only when utilizing the alternative site selection procedure described in Section 11.5 of this method.

6.1.1 Directional Probe. Any directional probe, such as United Sensor Type DA Three-Dimensional Directional Probe, capable of measuring both the pitch and yaw angles of gas flows is acceptable. Before using the probe, assign an identification number to the directional probe, and permanently mark or engrave the number on the body of the probe. The pressure holes of directional probes are susceptible to

plugging when used in particulate-laden gas streams. Therefore, a procedure for cleaning the pressure holes by ''back-purging'' with pressurized air is required.

6.1.2 Differential Pressure Gauges. Inclined manometers, U-tube manometers, or other differential pressure gauges (*e.g.,* magnehelic gauges) that meet the specifications described in Method 2, Section 6.2.

Note: If the differential pressure gauge produces both negative and positive readings, then both negative and positive pressure readings shall be calibrated at a minimum of three points as specified in Method 2, Section 6.2.

7.0 Reagents and Standards [Reserved]

8.0 Sample Collection, Preservation, Storage, and Transport [Reserved]

9.0 Quality Control [Reserved]

10.0 Calibration and Standardization [Reserved]

11.0 Procedure

11.1 Selection of Measurement Site.

11.1.1 Sampling and/or velocity measurements are performed at a site located at least eight stack or duct diameters downstream and two diameters upstream from any flow disturbance such as a bend, expansion, or contraction in the stack, or from a visible flame. If necessary, an alternative location may be selected, at a position at least two stack or duct diameters downstream and a half diameter upstream from any flow disturbance.

11.1.2 An alternative procedure is available for determining the acceptability of a measurement location not meeting the criteria above. This procedure described in Section 11.5 allows for the determination of gas flow angles at the sampling points and comparison of the measured results with acceptability criteria.

11.2 Determining the Number of Traverse Points.

11.2.1 Particulate Traverses.

11.2.1.1 When the eight- and two-diameter criterion can be met, the minimum number of traverse points shall be: (1) twelve, for circular or rectangular stacks with diameters (or equivalent diameters) greater than 0.61 meter (24 in.); (2) eight, for circular stacks with diameters between 0.30 and 0.61 meter (12 and 24 in.); and (3) nine, for rectangular stacks with equivalent diameters between 0.30 and 0.61 meter (12 and 24 in.).

11.2.1.2 When the eight- and two-diameter criterion cannot be met, the minimum number of traverse points is determined from Figure 1–1. Before referring to the figure, however, determine the distances from the measurement site to the nearest upstream and downstream disturbances, and divide each distance by the stack diameter or equivalent diameter, to determine the distance in terms of the number of duct diameters. Then, determine from Figure 1–1 the minimum number of traverse points that corresponds: (1) to the number of duct diameters upstream; and (2) to the number of diameters downstream. Select the higher of the two minimum numbers of traverse points, or a greater value, so that for circular stacks the number is a multiple of 4, and for rectangular stacks, the number is one of those shown in Table 1–1.

11.2.2 Velocity (Non-Particulate) Traverses. When velocity or volumetric flow rate is to be determined (but not particulate matter), the same procedure as that used for particulate traverses (Section 11.2.1) is followed, except that Figure 1–2 may be used instead of Figure 1–1.

11.3 Cross-Sectional Layout and Location of Traverse Points.

11.3.1 Circular Stacks.

11.3.1.1 Locate the traverse points on two perpendicular diameters according to Table 1–2 and the example shown in Figure 1–3. Any equation (see examples in References 2 and 3 in Section 16.0) that gives the same values as those in Table 1–2 may be used in lieu of Table 1–2.

11.3.1.2 For particulate traverses, one of the diameters must coincide with the plane containing the greatest expected concentration variation (*e.g.,* after bends); one diameter shall be congruent to the direction of the bend. This requirement becomes less critical as the distance from the disturbance increases; therefore, other diameter locations may be used, subject to the approval of the Administrator.

11.3.1.3 In addition, for elliptical stacks having unequal perpendicular diameters, separate traverse points shall be calculated and located along each diameter. To determine the cross-sectional area of the elliptical stack, use the following equation:

$$\text{Square Area} = D_1 \times D_2 \times 0.7854$$

Where: D_1 = Stack diameter 1

D_2 = Stack diameter 2

11.3.1.4 In addition, for stacks having diameters greater than 0.61 m (24 in.), no traverse points shall be within 2.5 centimeters (1.00 in.) of the stack walls; and for stack diameters equal to or less than 0.61 m (24 in.), no traverse points shall be located within 1.3 cm (0.50 in.) of the stack walls. To meet these criteria, observe the procedures given below.

11.3.2 Stacks With Diameters Greater Than 0.61 m (24 in.).

11.3.2.1 When any of the traverse points as located in Section 11.3.1 fall within 2.5 cm (1.0 in.) of the stack walls, relocate them away from the stack walls to: (1) a distance of 2.5 cm (1.0 in.); or (2) a distance equal to the nozzle inside diameter, whichever is larger. These relocated traverse points (on each end of a diameter) shall be the ''adjusted'' traverse points.

11.3.2.2 Whenever two successive traverse points are combined to form a single adjusted traverse point, treat the adjusted point as two separate traverse points, both in the sampling and/or velocity measurement procedure, and in recording of the data.

11.3.3 Stacks With Diameters Equal To or Less Than 0.61 m (24 in.). Follow the procedure in Section 11.3.1.1, noting only that any ''adjusted'' points should be relocated away from the stack walls to: (1) a distance of 1.3 cm (0.50 in.); or (2) a distance equal to the nozzle inside diameter, whichever is larger.

11.3.4 Rectangular Stacks.

11.3.4.1 Determine the number of traverse points as explained in Sections 11.1 and 11.2 of this method. From Table 1–1, determine the grid configuration. Divide the stack cross-section into as many equal rectangular elemental areas as traverse points, and then locate a traverse point at the centroid of each equal area according to the example in Figure 1–4.

11.3.4.2 To use more than the minimum number of traverse points, expand the ''minimum number of traverse points'' matrix (see Table 1–1) by adding the extra traverse points along one or the other or both legs of the matrix; the final matrix need not be balanced. For example, if a 4×3 ''minimum number of points'' matrix were expanded to 36 points, the final matrix could be 9×4 or 12×3, and would not necessarily have to be 6×6. After constructing the final matrix, divide the stack cross-section into as many equal rectangular, elemental areas as traverse points, and locate a traverse point at the centroid of each equal area.

11.3.4.3 The situation of traverse points being too close to the stack walls is not expected to arise with rectangular stacks. If this problem should ever arise, the Administrator must be contacted for resolution of the matter.

11.4 Verification of Absence of Cyclonic Flow.

11.4.1 In most stationary sources, the direction of stack gas flow is essentially parallel to the stack walls. However, cyclonic flow may exist (1) after such devices as cyclones and inertial demisters following venturi

scrubbers, or (2) in stacks having tangential inlets or other duct configurations which tend to induce swirling; in these instances, the presence or absence of cyclonic flow at the sampling location must be determined. The following techniques are acceptable for this determination.

11.4.2 Level and zero the manometer. Connect a Type S pitot tube to the manometer and leak-check system. Position the Type S pitot tube at each traverse point, in succession, so that the planes of the face openings of the pitot tube are perpendicular to the stack cross-sectional plane; when the Type S pitot tube is in this position, it is at ''0° reference.'' Note the differential pressure (Δp) reading at each traverse point. If a null (zero) pitot reading is obtained at 0° reference at a given traverse point, an acceptable flow condition exists at that point. If the pitot reading is not zero at 0° reference, rotate the pitot tube (up to ±90° yaw angle), until a null reading is obtained. Carefully determine and record the value of the rotation angle (α) to the nearest degree. After the null technique has been applied at each traverse point, calculate the average of the absolute values of α; assign α values of 0° to those points for which no rotation was required, and include these in the overall average. If the average value of α is greater than 20°, the overall flow condition in the stack is unacceptable, and alternative methodology, subject to the approval of the Administrator, must be used to perform accurate sample and velocity traverses.

11.5 The alternative site selection procedure may be used to determine the rotation angles in lieu of the procedure outlined in Section 11.4.

11.5.1 Alternative Measurement Site Selection Procedure. This alternative applies to sources where measurement locations are less than 2 equivalent or duct diameters downstream or less than one-half duct diameter upstream from a flow disturbance. The alternative should be limited to ducts larger than 24 in. in diameter where blockage and wall effects are minimal. A directional flow-sensing probe is used to measure pitch and yaw angles of the gas flow at 40 or more traverse points; the resultant angle is calculated and compared with acceptable criteria for mean and standard deviation.

Note: Both the pitch and yaw angles are measured from a line passing through the traverse point and parallel to the stack axis. The pitch angle is the angle of the gas flow component in the plane that INCLUDES the traverse line and is parallel to the stack axis. The yaw angle is the angle of the gas flow component in the plane PERPENDICULAR to the traverse line at the traverse point and is measured from the line passing through the traverse point and parallel to the stack axis.

11.5.2 Traverse Points. Use a minimum of 40 traverse points for circular ducts and 42 points for rectangular ducts for the gas flow angle determinations. Follow the procedure outlined in Section 11.3 and Table 1–1 or 1–2 for the location and layout of the traverse points. If the measurement location is determined to be acceptable according to the criteria in this alternative procedure, use the same traverse point number and locations for sampling and velocity measurements.

11.5.3 Measurement Procedure.

11.5.3.1 Prepare the directional probe and differential pressure gauges as recommended by the manufacturer. Capillary tubing or surge tanks may be used to dampen pressure fluctuations. It is recommended, but not required, that a pretest leak check be conducted. To perform a leak check, pressurize or use suction on the impact opening until a reading of at least 7.6 cm (3 in.) H_2O registers on the differential pressure gauge, then plug the impact opening. The pressure of a leak-free system will remain stable for at least 15 seconds.

11.5.3.2 Level and zero the manometers. Since the manometer level and zero may drift because of vibrations and temperature changes, periodically check the level and zero during the traverse.

11.5.3.3 Position the probe at the appropriate locations in the gas stream, and rotate until zero deflection is indicated for the yaw angle pressure gauge. Determine and record the yaw angle. Record the pressure gauge readings for the pitch angle, and determine the pitch angle from the calibration curve. Repeat this procedure for each traverse point. Complete a ''back-purge'' of the pressure lines and the impact openings prior to measurements of each traverse point.

11.5.3.4 A post-test check as described in Section 11.5.3.1 is required. If the criteria for a leak-free system are not met, repair the equipment, and repeat the flow angle measurements.

11.5.4 Calibration. Use a flow system as described in Sections 10.1.2.1 and 10.1.2.2 of Method 2. In addition, the flow system shall have the capacity to generate two test-section velocities: one between 365 and 730 m/min (1,200 and 2,400 ft/min) and one between 730 and 1,100 m/min (2,400 and 3,600 ft/min).

11.5.4.1 Cut two entry ports in the test section. The axes through the entry ports shall be perpendicular to each other and intersect in the centroid of the test section. The ports should be elongated slots parallel to the axis of the test section and of sufficient length to allow measurement of pitch angles while maintaining the pitot head position at the test-section centroid. To facilitate alignment of the directional probe during calibration, the test section should be constructed of plexiglass or some other transparent material. All calibration measurements should be made at the same point in the test section, preferably at the centroid of the test section.

11.5.4.2 To ensure that the gas flow is parallel to the central axis of the test section, follow the procedure outlined in Section 11.4 for cyclonic flow determination to measure the gas flow angles at the centroid of the test section from two test ports located 90° apart. The gas flow angle measured in each port must be ±2° of 0°. Straightening vanes should be installed, if necessary, to meet this criterion.

11.5.4.3 Pitch Angle Calibration. Perform a calibration traverse according to the manufacturer's recommended protocol in 5° increments for angles from −60° to +60° at one velocity in each of the two ranges specified above. Average the pressure ratio values obtained for each angle in the two flow ranges, and plot a calibration curve with the average values of the pressure ratio (or other suitable measurement factor as recommended by the manufacturer) versus the pitch angle. Draw a smooth line through the data points. Plot also the data values for each traverse point. Determine the differences between the measured data values and the angle from the calibration curve at the same pressure ratio. The difference at each comparison must be within 2° for angles between 0° and 40° and within 3° for angles between 40° and 60°.

11.5.4.4 Yaw Angle Calibration. Mark the three-dimensional probe to allow the determination of the yaw position of the probe. This is usually a line extending the length of the probe and aligned with the impact opening. To determine the accuracy of measurements of the yaw angle, only the zero or null position need be calibrated as follows: Place the directional probe in the test section, and rotate the probe until the zero position is found. With a protractor or other angle measuring device, measure the angle indicated by the yaw angle indicator on the three-dimensional probe. This should be within 2° of 0°. Repeat this measurement for any other points along the length of the pitot where yaw angle measurements could be read in order to account for

variations in the pitot markings used to indicate pitot head positions.

12.0 Data Analysis and Calculations

12.1 Nomenclature.

L = length.
n = total number of traverse points.
P_i = pitch angle at traverse point i, degree.
R_{avg} = average resultant angle, degree.
R_i = resultant angle at traverse point i, degree.
S_d = standard deviation, degree.
W = width.
Y_i = yaw angle at traverse point i, degree.

12.2 For a rectangular cross section, an equivalent diameter (D_e) shall be calculated using the following equation, to determine the upstream and downstream distances:

$$D_e = \frac{2(L)(W)}{L+W} \qquad \text{Eq. 1-1}$$

12.3 If use of the alternative site selection procedure (Section 11.5 of this method) is required, perform the following calculations using the equations below: the resultant angle at each traverse point, the average resultant angle, and the standard deviation. Complete the calculations retaining at least one extra significant figure beyond that of the acquired data. Round the values after the final calculations.

12.3.1 Calculate the resultant angle at each traverse point:

$$R_i = \text{arc cosine}\left[(\text{cosine } Y_i)(\text{cosine } P_i)\right] \qquad \text{Eq. 1-2}$$

12.3.2 Calculate the average resultant for the measurements:

$$R_{avg} = \sum R_i/n \qquad \text{Eq. 1-3}$$

12.3.3 Calculate the standard deviations:

$$S_d = \sqrt{\frac{\sum_{i=1}^{n}\left(R_i - R_{avg}\right)^2}{(n-1)}} \qquad \text{Eq. 1-4}$$

12.3.4 Acceptability Criteria. The measurement location is acceptable if $R_{avg} \leq 20°$ and $S_d \leq 10°$.

13.0 Method Performance [Reserved]

14.0 Pollution Prevention [Reserved]

15.0 Waste Management [Reserved]

16.0 References

1. Determining Dust Concentration in a Gas Stream, ASME Performance Test Code No. 27. New York. 1957.

2. DeVorkin, Howard, et al. Air Pollution Source Testing Manual. Air Pollution Control District. Los Angeles, CA. November 1963.

3. Methods for Determining of Velocity, Volume, Dust and Mist Content of Gases. Western Precipitation Division of Joy Manufacturing Co. Los Angeles, CA. Bulletin WP–50. 1968.

4. Standard Method for Sampling Stacks for Particulate Matter. In: 1971 Book of ASTM Standards, Part 23. ASTM Designation D 2928–71. Philadelphia, PA. 1971.

5. Hanson, H.A., et al. Particulate Sampling Strategies for Large Power Plants Including Nonuniform Flow. USEPA, ORD, ESRL, Research Triangle Park, NC. EPA–600/2–76–170. June 1976.

6. Entropy Environmentalists, Inc. Determination of the Optimum Number of Sampling Points: An Analysis of Method 1 Criteria. Environmental Protection Agency. Research Triangle Park, NC. EPA Contract No. 68–01–3172, Task 7.

7. Hanson, H.A., R.J. Davini, J.K. Morgan, and A.A. Iversen. Particulate Sampling Strategies for Large Power Plants Including Nonuniform Flow. USEPA, Research Triangle Park, NC. Publication No. EPA–600/2–76–170. June 1976. 350 pp.

8. Brooks, E.F., and R.L. Williams. Flow and Gas Sampling Manual. U.S. Environmental Protection Agency. Research Triangle Park, NC. Publication No. EPA–600/2–76–203. July 1976. 93 pp.

9. Entropy Environmentalists, Inc. Traverse Point Study. EPA Contract No. 68–02–3172. June 1977. 19 pp.

10. Brown, J. and K. Yu. Test Report: Particulate Sampling Strategy in Circular Ducts. Emission Measurement Branch. U.S. Environmental Protection Agency, Research Triangle Park, NC 27711. July 31, 1980. 12 pp.

11. Hawksley, P.G.W., S. Badzioch, and J.H. Blackett. Measurement of Solids in Flue Gases. Leatherhead, England, The British Coal Utilisation Research Association. 1961. pp. 129–133.

12. Knapp, K.T. The Number of Sampling Points Needed for Representative Source Sampling. In: Proceedings of the Fourth National Conference on Energy and Environment. Theodore, L. et al. (ed). Dayton, Dayton Section of the American Institute of Chemical Engineers. October 3–7, 1976. pp. 563–568.

13. Smith, W.S. and D.J. Grove. A Proposed Extension of EPA Method 1 Criteria. Pollution Engineering. XV (8):36–37. August 1983.

14. Gerhart, P.M. and M.J. Dorsey. Investigation of Field Test Procedures for Large Fans. University of Akron. Akron, OH. (EPRI Contract CS–1651). Final Report (RP–1649–5). December 1980.

15. Smith, W.S. and D.J. Grove. A New Look at Isokinetic Sampling—Theory and Applications. Source Evaluation Society Newsletter. VIII (3):19–24. August 1983.

17.0 Tables, Diagrams, Flowcharts, and Validation Data

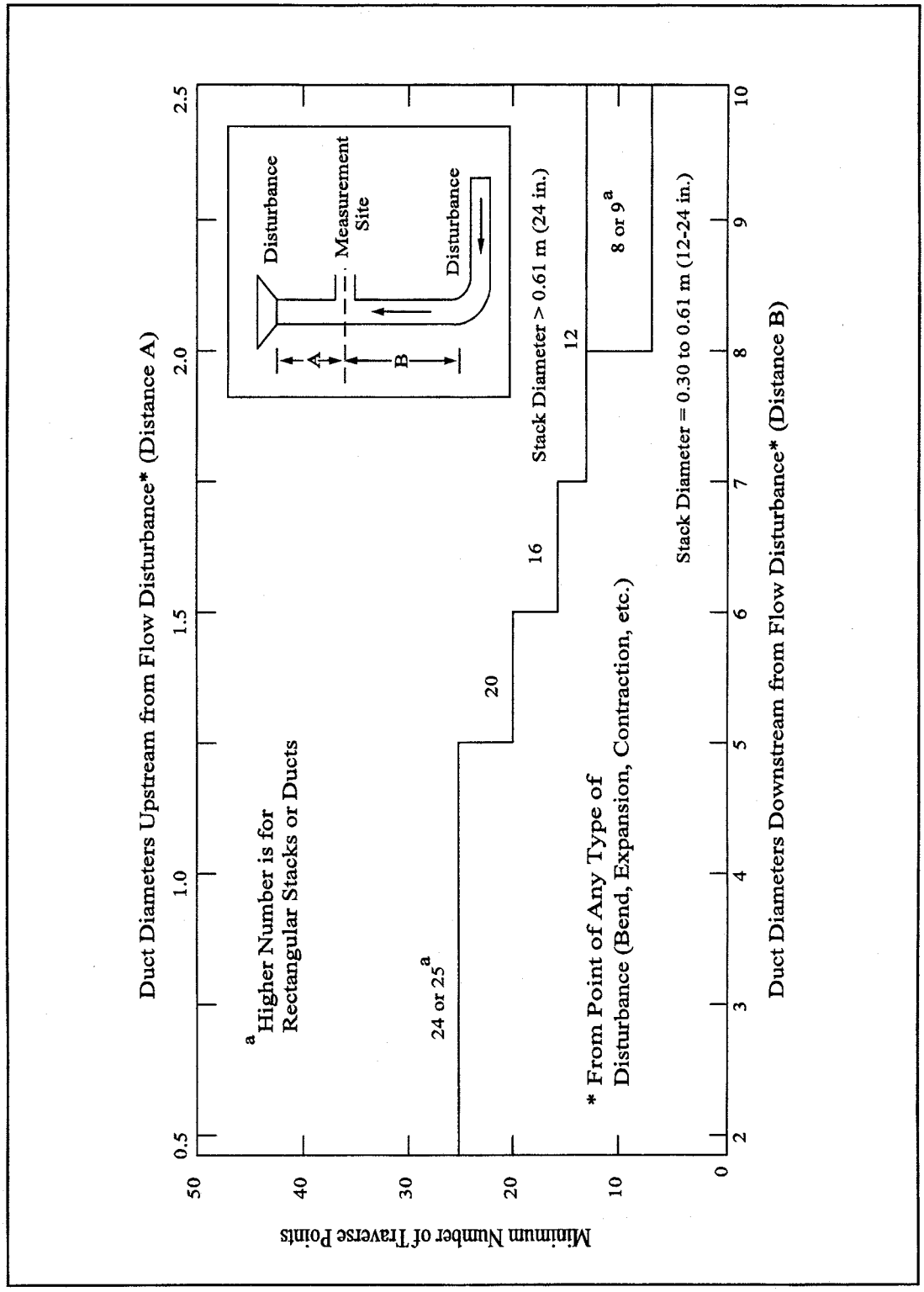

Figure 1-1. Minimum number of traverse points for particulate traverses.

TABLE 1–1 CROSS-SECTION LAYOUT FOR RECTANGULAR STACKS

Number of tranverse points layout	Matrix
9	3×3
12	4×3
16	4×4
20	5×4
25	5×5
30	6×5
36	6×6
42	7×6
49	7×7

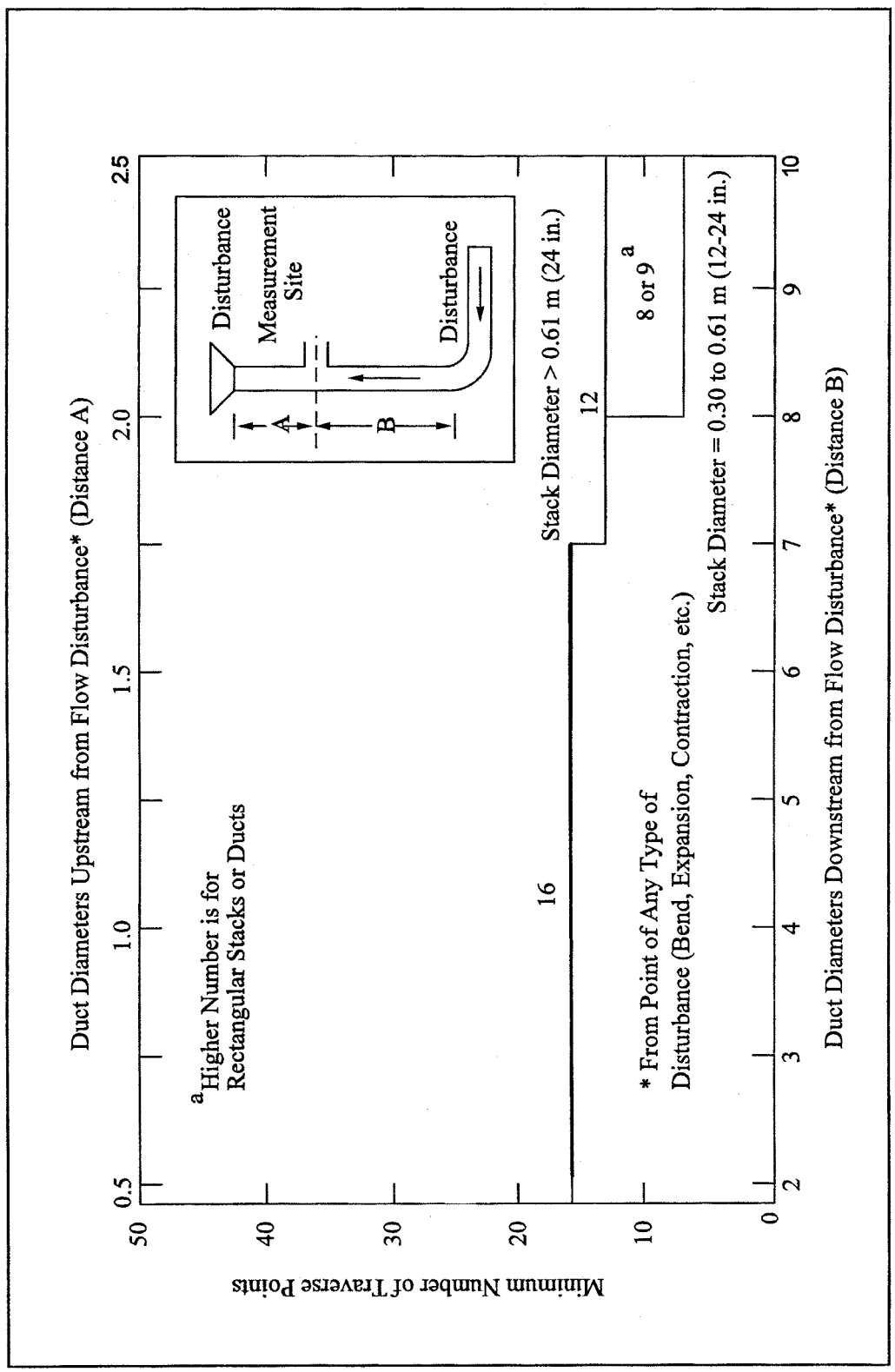

Figure 1-2. Minimum number of traverse points for velocity (nonparticulate) traverses.

TABLE 1–2.—LOCATION OF TRAVERSE POINTS IN CIRCULAR STACKS

[Percent of stack diameter from inside wall to tranverse point]

Traverse point number on a diameter	Number of traverse points on a diameter											
	2	4	6	8	10	12	14	16	18	20	22	24
1	14.6	6.7	4.4	3.2	2.6	2.1	1.8	1.6	1.4	1.3	1.1	1.1
2	85.4	25.0	14.6	10.5	8.2	6.7	5.7	4.9	4.4	3.9	3.5	3.2
3		75.0	29.6	19.4	14.6	11.8	9.9	8.5	7.5	6.7	6.0	5.5
4		93.3	70.4	32.3	22.6	17.7	14.6	12.5	10.9	9.7	8.7	7.9
5			85.4	67.7	34.2	25.0	20.1	16.9	14.6	12.9	11.6	10.5
6			95.6	80.6	65.8	35.6	26.9	22.0	18.8	16.5	14.6	13.2
7				89.5	77.4	64.4	36.6	28.3	23.6	20.4	18.0	16.1
8				96.8	85.4	75.0	63.4	37.5	29.6	25.0	21.8	19.4
9					91.8	82.3	73.1	62.5	38.2	30.6	26.2	23.0
10					97.4	88.2	79.9	71.7	61.8	38.8	31.5	27.2
11						93.3	85.4	78.0	70.4	61.2	39.3	32.3
12						97.9	90.1	83.1	76.4	69.4	60.7	39.8
13							94.3	87.5	81.2	75.0	68.5	60.2
14							98.2	91.5	85.4	79.6	73.8	67.7
15								95.1	89.1	83.5	78.2	72.8
16								98.4	92.5	87.1	82.0	77.0
17									95.6	90.3	85.4	80.6
18									98.6	93.3	88.4	83.9
19										96.1	91.3	86.8
20										98.7	94.0	89.5
21											96.5	92.1
22											98.9	94.5
23												96.8
24												99.9

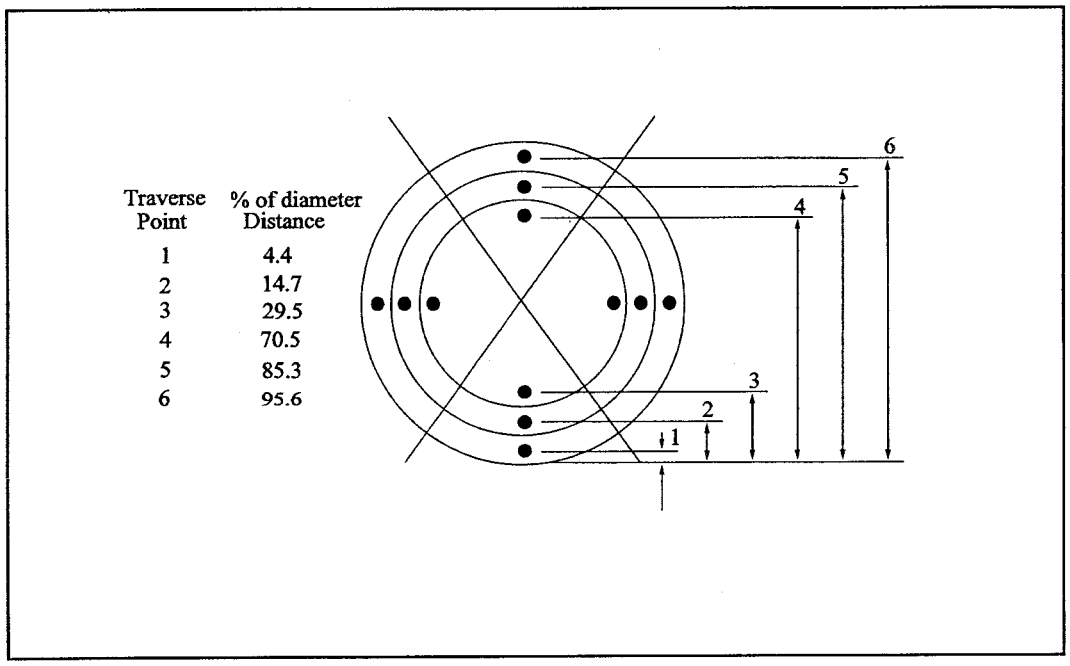

Figure 1-3. Example showing circular stack cross section divided into 12 equal areas, with location of traverse points.

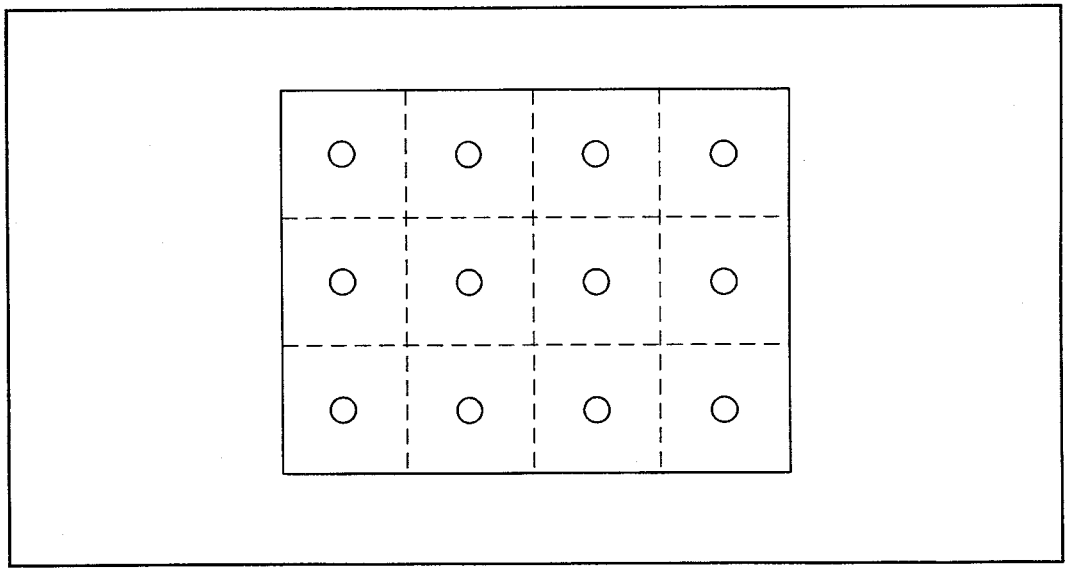

Figure 1-4. Example showing rectangular stack cross section divided into 12 equal areas, with traverse points at centroid of each area.

Method 1A—Sample and Velocity Traverses for Stationary Sources With Small Stacks or Ducts

Note: This method does not include all of the specifications (*e.g.,* equipment and supplies) and procedures (*e.g.,* sampling) essential to its performance. Some material is incorporated by reference from other methods in this part. Therefore, to obtain reliable results, persons using this method should have a thorough knowledge of at least the following additional test method: Method 1.

1.0 Scope and Application

1.1 Measured Parameters. The purpose of the method is to provide guidance for the selection of sampling ports and traverse points at which sampling for air pollutants will be performed pursuant to regulations set forth in this part.

1.2 Applicability. The applicability and principle of this method are identical to Method 1, except its applicability is limited to stacks or ducts. This method is applicable to flowing gas streams in ducts, stacks, and flues of less than about 0.30 meter (12 in.) in diameter, or 0.071 m^2 (113 $in.^2$) in cross-sectional area, but equal to or greater than about 0.10 meter (4 in.) in diameter, or 0.0081 m^2 (12.57 $in.^2$) in cross-sectional area. This method cannot be used when the flow is cyclonic or swirling.

1.3 Data Quality Objectives. Adherence to the requirements of this method will enhance the quality of the data obtained from air pollutant sampling methods.

2.0 Summary of Method

2.1 The method is designed to aid in the representative measurement of pollutant emissions and/or total volumetric flow rate from a stationary source. A measurement site or a pair of measurement sites where the effluent stream is flowing in a known direction is (are) selected. The cross-section of the stack is divided into a number of equal areas. Traverse points are then located within each of these equal areas.

2.2 In these small diameter stacks or ducts, the conventional Method 5 stack assembly (consisting of a Type S pitot tube attached to a sampling probe, equipped with a nozzle and thermocouple) blocks a significant portion of the cross-section of the duct and causes inaccurate measurements. Therefore, for particulate matter (PM) sampling in small stacks or ducts, the gas velocity is measured using a standard pitot tube downstream of the actual emission sampling site. The straight run of duct between the PM sampling and velocity measurement sites allows the flow profile, temporarily disturbed by the presence of the sampling probe, to redevelop and stabilize.

3.0 Definitions [Reserved]

4.0 Interferences [Reserved]

5.0 Safety

5.1 Disclaimer. This method may involve hazardous materials, operations, and equipment. This test method may not address all of the safety problems associated with its use. It is the responsibility of the user of this test method to establish appropriate safety and health practices and determine the applicability of regulatory limitations prior to performing this test method.

6.0 Equipment and Supplies [Reserved]

7.0 Reagents and Standards [Reserved]

8.0 Sample Collection, Preservation, Storage, and Transport [Reserved]

9.0 Quality Control [Reserved]

10.0 Calibration and Standardization [Reserved]

11.0 Procedure

11.1 Selection of Measurement Site.

11.1.1 Particulate Measurements—Steady or Unsteady Flow. Select a particulate measurement site located preferably at least eight equivalent stack or duct diameters downstream and 10 equivalent diameters upstream from any flow disturbances such as bends, expansions, or contractions in the stack, or from a visible flame. Next, locate the velocity measurement site eight equivalent diameters downstream of the particulate measurement site (see Figure 1A–1). If such locations are not available, select an alternative particulate measurement location at least two equivalent stack or duct diameters downstream and two and one-half diameters upstream from any flow disturbance. Then, locate the velocity measurement site two equivalent diameters downstream from the particulate measurement site. (See Section 12.2 of Method 1 for calculating equivalent diameters for a rectangular cross-section.)

11.1.2 PM Sampling (Steady Flow) or Velocity (Steady or Unsteady Flow) Measurements. For PM sampling when the volumetric flow rate in a duct is constant with respect to time, Section 11.1.1 of Method 1 may be followed, with the PM sampling and velocity measurement performed at one location. To demonstrate that the flow rate is constant (within 10 percent) when PM measurements are made, perform complete velocity traverses before and after the PM sampling run, and calculate the deviation of the flow rate derived after the PM sampling run from the one derived before the PM sampling run. The PM sampling run is acceptable if the deviation does not exceed 10 percent.

11.2 Determining the Number of Traverse Points.

11.2.1 Particulate Measurements (Steady or Unsteady Flow). Use Figure 1–1 of Method 1 to determine the number of traverse points to use at both the velocity measurement and PM sampling locations. Before referring to the figure, however, determine the distances between both the velocity measurement and PM sampling sites to the nearest upstream and downstream disturbances. Then divide each distance by the stack diameter or equivalent diameter to express the distances in terms of the number of duct diameters. Then, determine the number of traverse points from Figure 1–1 of Method 1 corresponding to each of these four distances. Choose the highest of the four numbers of traverse points (or a greater number) so that, for circular ducts the number is a multiple of four; and for rectangular ducts, the number is one of those shown in Table 1–1 of Method 1. When the optimum duct diameter location criteria can be satisfied, the minimum number of traverse points required is eight for circular ducts and nine for rectangular ducts.

11.2.2 PM Sampling (Steady Flow) or only Velocity (Non-Particulate) Measurements. Use Figure 1–2 of Method 1 to determine number of traverse points, following the same procedure used for PM sampling as described in Section 11.2.1 of Method 1. When the optimum duct diameter location criteria can be satisfied, the minimum number of traverse points required is eight for circular ducts and nine for rectangular ducts.

11.3 Cross-sectional Layout, Location of Traverse Points, and Verification of the Absence of Cyclonic Flow. Same as Method 1, Sections 11.3 and 11.4, respectively.

12.0 Data Analysis and Calculations [Reserved]

13.0 Method Performance [Reserved]

14.0 Pollution Prevention [Reserved]

15.0 Waste Management [Reserved]

16.0 References

Same as Method 1, Section 16.0, References 1 through 6, with the addition of the following:

1. Vollaro, Robert F. Recommended Procedure for Sample Traverses in Ducts Smaller Than 12 Inches in

Diameter. U.S. Environmental Protection Agency, Emission Measurement Branch, Research Triangle Park, North Carolina. January 1977.

17.0 Tables, Diagrams, Flowcharts, and Validation Data

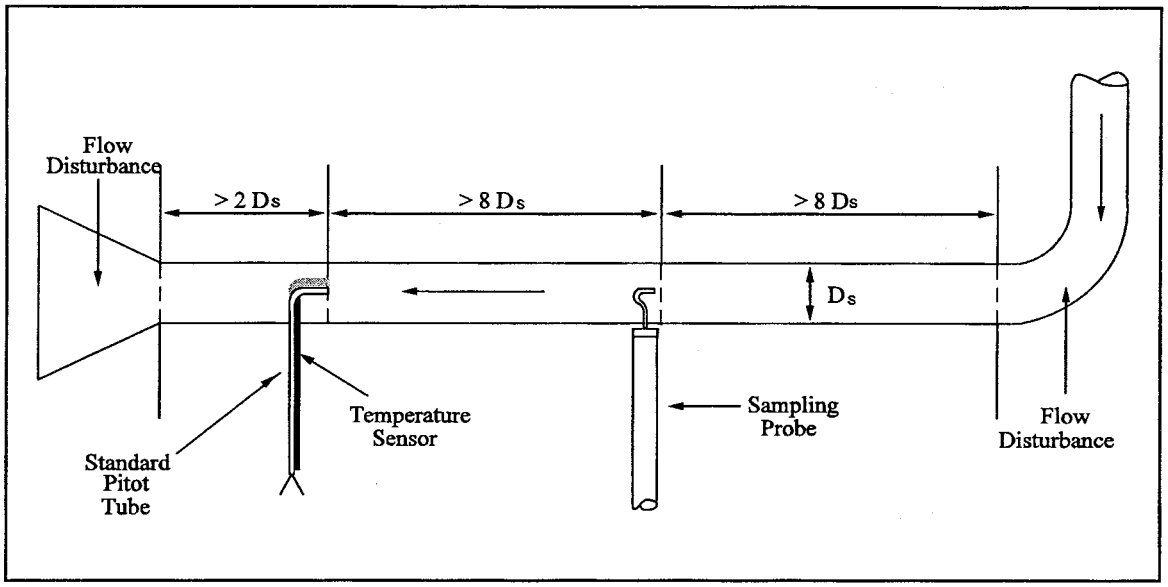

Figure 1A-1. Recommended sampling arrangement for small ducts

Method 2—Determination of Stack Gas Velocity and Volumetric Flow Rate (Type S Pitot Tube)

Note: This method does not include all of the specifications (*e.g.*, equipment and supplies) and procedures (*e.g.*, sampling) essential to its performance. Some material is incorporated by reference from other methods in this part. Therefore, to obtain reliable results, persons using this method should have a thorough knowledge of at least the following additional test method: Method 1.

1.0 Scope and Application.

1.1 This method is applicable for the determination of the average velocity and the volumetric flow rate of a gas stream.

1.2 This method is not applicable at measurement sites that fail to meet the criteria of Method 1, Section 11.1. Also, the method cannot be used for direct measurement in cyclonic or swirling gas streams; Section 11.4 of Method 1 shows how to determine cyclonic or swirling flow conditions. When unacceptable conditions exist, alternative procedures, subject to the approval of the Administrator, must be employed to produce accurate flow rate determinations. Examples of such alternative procedures are: (1) to install straightening vanes; (2) to calculate the total volumetric flow rate stoichiometrically, or (3) to move to another measurement site at which the flow is acceptable.

1.3 Data Quality Objectives. Adherence to the requirements of this method will enhance the quality of the data obtained from air pollutant sampling methods.

2.0 Summary of Method.

2.1 The average gas velocity in a stack is determined from the gas density and from measurement of the average velocity head with a Type S (Stausscheibe or reverse type) pitot tube.

3.0 Definitions [Reserved]

4.0 Interferences [Reserved]

5.0 Safety

5.1 Disclaimer. This method may involve hazardous materials, operations, and equipment. This test method may not address all of the safety problems associated with its use. It is the responsibility of the user of this test method to establish appropriate safety and health practices and determine the applicability of regulatory limitations prior to performing this test method.

6.0 Equipment and Supplies

Specifications for the apparatus are given below. Any other apparatus that has been demonstrated (subject to approval of the Administrator) to be capable of meeting the specifications will be considered acceptable.

6.1 Type S Pitot Tube.

6.1.1 Pitot tube made of metal tubing (*e.g.*, stainless steel) as shown in Figure 2–1. It is recommended that the external tubing diameter (dimension D_t, Figure 2–2b) be between 0.48 and 0.95 cm (3/16 and 3/8 inch). There shall be an equal distance from the base of each leg of the pitot tube to its face-opening plane (dimensions P_A and P_B, Figure 2–2b); it is recommended that this distance be between 1.05 and 1.50 times the external tubing diameter. The face openings of the pitot tube shall, preferably, be aligned as shown in Figure 2–2; however, slight misalignments of the openings are permissible (see Figure 2–3).

6.1.2 The Type S pitot tube shall have a known coefficient, determined as outlined in Section 10.0. An identification number shall be assigned to the pitot tube; this number shall be permanently marked or engraved on the body of the tube. A standard pitot tube may be used instead of a Type S, provided that it meets the specifications of Sections 6.7 and 10.2. Note, however, that the static and impact pressure holes of standard pitot tubes are susceptible to plugging in particulate-laden gas streams. Therefore, whenever a standard pitot tube is used to perform a traverse, adequate proof must be furnished that the openings of the pitot tube have not plugged up during the traverse period. This can be accomplished by comparing the velocity head (Δp) measurement recorded at a selected traverse point (readable Δp value) with a second Δp measurement recorded after ''back purging'' with pressurized air to clean the impact and static holes of the standard pitot tube. If the before and

after Δp measurements are within 5 percent, then the traverse data are acceptable. Otherwise, the data should be rejected and the traverse measurements redone. Note that the selected traverse point should be one that demonstrates a readable Δp value. If ''back purging'' at regular intervals is part of a routine procedure, then comparative Δp measurements shall be conducted as above for the last two traverse points that exhibit suitable Δp measurements.

6.2 Differential Pressure Gauge. An inclined manometer or equivalent device. Most sampling trains are equipped with a 10 in. (water column) inclined-vertical manometer, having 0.01 in. H_20 divisions on the 0 to 1 in. inclined scale, and 0.1 in. H_20 divisions on the 1 to 10 in. vertical scale. This type of manometer (or other gauge of equivalent sensitivity) is satisfactory for the measurement of Δp values as low as 1.27 mm (0.05 in.) H_20. However, a differential pressure gauge of greater sensitivity shall be used (subject to the approval of the Administrator), if any of the following is found to be true: (1) the arithmetic average of all Δp readings at the traverse points in the stack is less than 1.27 mm (0.05 in.) H_20; (2) for traverses of 12 or more points, more than 10 percent of the individual Δp readings are below 1.27 mm (0.05 in.) H_20; or (3) for traverses of fewer than 12 points, more than one Δp reading is below 1.27 mm (0.05 in.) H_20. Reference 18 (see Section 17.0) describes commercially available instrumentation for the measurement of low-range gas velocities.

6.2.1 As an alternative to criteria (1) through (3) above, Equation 2–1 (Section 12.2) may be used to determine the necessity of using a more sensitive differential pressure gauge. If T is greater than 1.05, the velocity head data are unacceptable and a more sensitive differential pressure gauge must be used.

Note: If differential pressure gauges other than inclined manometers are used (*e.g.*, magnehelic gauges), their calibration must be checked after each test series. To check the calibration of a differential pressure gauge, compare Δp readings of the gauge with those of a gauge-oil manometer at a minimum of three points, approximately representing the range of Δp values in the stack. If, at each point, the values of Δp as read by the differential pressure gauge and gauge-oil manometer agree to within 5 percent, the differential pressure gauge shall be considered to be in proper calibration. Otherwise, the test series shall either be voided, or procedures to adjust the measured Δp values and final results shall be used, subject to the approval of the Administrator.

6.3 Temperature Sensor. A thermocouple, liquid-filled bulb thermometer, bimetallic thermometer, mercury-in-glass thermometer, or other gauge capable of measuring temperatures to within 1.5 percent of the minimum absolute stack temperature. The temperature sensor shall be attached to the pitot tube such that the sensor tip does not touch any metal; the gauge shall be in an interference-free arrangement with respect to the pitot tube face openings (see Figure 2–1 and Figure 2–4). Alternative positions may be used if the pitot tube-temperature gauge system is calibrated according to the procedure of Section 10.0. Provided that a difference of not more than 1 percent in the average velocity measurement is introduced, the temperature gauge need not be attached to the pitot tube. This alternative is subject to the approval of the Administrator.

6.4 Pressure Probe and Gauge. A piezometer tube and mercury- or water-filled U-tube manometer capable of measuring stack pressure to within 2.5 mm (0.1 in.) Hg. The static tap of a standard type pitot tube or one leg of a Type S pitot tube with the face opening planes positioned parallel to the gas flow may also be used as the pressure probe.

6.5 Barometer. A mercury, aneroid, or other barometer capable of measuring atmospheric pressure to within 2.54 mm (0.1 in.) Hg.

Note: The barometric pressure reading may be obtained from a nearby National Weather Service station. In this case, the station value (which is the absolute barometric pressure) shall be requested and an adjustment for elevation differences between the weather station and sampling point shall be made at a rate of minus 2.5 mm (0.1 in.) Hg per 30 m (100 ft) elevation increase or plus 2.5 mm (0.1 in.) Hg per 30 m (100 ft.) for elevation decrease.

6.6 Gas Density Determination Equipment. Method 3 equipment, if needed (see Section 8.6), to determine the stack gas dry molecular weight, and Method 4 (reference method) or Method 5 equipment for moisture content determination. Other methods may be used subject to approval of the Administrator.

6.7 Calibration Pitot Tube. When calibration of the Type S pitot tube is necessary (see Section 10.1), a standard pitot tube shall be used for a reference. The standard pitot tube shall, preferably, have a known coefficient, obtained either (1) directly from the National Institute of Standards and Technology (NIST), Gaithersburg MD 20899, (301) 975–2002, or (2) by calibration against another standard pitot tube with an NIST-traceable coefficient. Alternatively, a standard pitot tube designed according to the criteria given in Sections 6.7.1 through 6.7.5 below and illustrated in Figure 2–5 (see also References 7, 8, and 17 in Section 17.0) may be used. Pitot tubes designed according to these specifications will have baseline coefficients of 0.99 ± 0.01.

6.7.1 Standard Pitot Design.

6.7.1.1 Hemispherical (shown in Figure 2–5), ellipsoidal, or conical tip.

6.7.1.2 A minimum of six diameters straight run (based upon D, the external diameter of the tube) between the tip and the static pressure holes.

6.7.1.3 A minimum of eight diameters straight run between the static pressure holes and the centerline of the external tube, following the 90° bend.

6.7.1.4 Static pressure holes of equal size (approximately 0.1 D), equally spaced in a piezometer ring configuration.

6.7.1.5 90° bend, with curved or mitered junction.

6.8 Differential Pressure Gauge for Type S Pitot Tube Calibration. An inclined manometer or equivalent. If the single-velocity calibration technique is employed (see Section 10.1.2.3), the calibration differential pressure gauge shall be readable to the nearest 0.127 mm (0.005 in.) H_20. For multivelocity calibrations, the gauge shall be readable to the nearest 0.127 mm (0.005 in.) H_20 for Δp values between 1.27 and 25.4 mm (0.05 and 1.00 in.) H_20, and to the nearest 1.27 mm (0.05 in.) H_20 for Δp values above 25.4 mm (1.00 in.) H_20. A special, more sensitive gauge will be required to read Δp values below 1.27 mm (0.05 in.) H_20 (see Reference 18 in Section 16.0).

7.0 Reagents and Standards [Reserved]

8.0 Sample Collection and Analysis

8.1 Set up the apparatus as shown in Figure 2–1. Capillary tubing or surge tanks installed between the manometer and pitot tube may be used to dampen Δp fluctuations. It is recommended, but not required, that a pretest leak-check be conducted as follows: (1) blow through the pitot impact opening until at least 7.6 cm (3.0 in.) H_20 velocity head registers on the manometer; then, close off the impact opening. The pressure shall remain stable for at least 15 seconds; (2) do the same for the static pressure side, except using suction to obtain the minimum of 7.6 cm (3.0 in.) H_20. Other leak-check procedures, subject to the approval of the Administrator, may be used.

8.2 Level and zero the manometer. Because the manometer level and zero

may drift due to vibrations and temperature changes, make periodic checks during the traverse (at least once per hour). Record all necessary data on a form similar to that shown in Figure 2–6.

8.3 Measure the velocity head and temperature at the traverse points specified by Method 1. Ensure that the proper differential pressure gauge is being used for the range of Δp values encountered (see Section 6.2). If it is necessary to change to a more sensitive gauge, do so, and remeasure the Δp and temperature readings at each traverse point. Conduct a post-test leak-check (mandatory), as described in Section 8.1 above, to validate the traverse run.

8.4 Measure the static pressure in the stack. One reading is usually adequate.

8.5 Determine the atmospheric pressure.

8.6 Determine the stack gas dry molecular weight. For combustion processes or processes that emit essentially CO_2, O_2, CO, and N_2, use Method 3. For processes emitting essentially air, an analysis need not be conducted; use a dry molecular weight of 29.0. For other processes, other methods, subject to the approval of the Administrator, must be used.

8.7 Obtain the moisture content from Method 4 (reference method, or equivalent) or from Method 5.

8.8 Determine the cross-sectional area of the stack or duct at the sampling location. Whenever possible, physically measure the stack dimensions rather than using blueprints. Do not assume that stack diameters are equal. Measure each diameter distance to verify its dimensions.

9.0 Quality Control

Section	Quality control measure	Effect
10.1–10.4	Sampling equipment calibration	Ensure accurate measurement of stack gas flow rate, sample volume.

10.0 Calibration and Standardization

10.1 Type S Pitot Tube. Before its initial use, carefully examine the Type S pitot tube top, side, and end views to verify that the face openings of the tube are aligned within the specifications illustrated in Figures 2–2 and 2–3. The pitot tube shall not be used if it fails to meet these alignment specifications. After verifying the face opening alignment, measure and record the following dimensions of the pitot tube: (a) the external tubing diameter (dimension D_t, Figure 2–2b); and (b) the base-to-opening plane distances (dimensions P_A and P_B, Figure 2–2b). If D_t is between 0.48 and 0.95 cm 3⁄16 and 3⁄8 in.), and if P_A and P_B are equal and between 1.05 and 1.50 D_t, there are two possible options: (1) the pitot tube may be calibrated according to the procedure outlined in Sections 10.1.2 through 10.1.5, or (2) a baseline (isolated tube) coefficient value of 0.84 may be assigned to the pitot tube. Note, however, that if the pitot tube is part of an assembly, calibration may still be required, despite knowledge of the baseline coefficient value (see Section 10.1.1). If D_t, P_A, and P_B are outside the specified limits, the pitot tube must be calibrated as outlined in Sections 10.1.2 through 10.1.5.

10.1.1 Type S Pitot Tube Assemblies. During sample and velocity traverses, the isolated Type S pitot tube is not always used; in many instances, the pitot tube is used in combination with other source-sampling components (e.g., thermocouple, sampling probe, nozzle) as part of an ''assembly.'' The presence of other sampling components can sometimes affect the baseline value of the Type S pitot tube coefficient (Reference 9 in Section 17.0); therefore, an assigned (or otherwise known) baseline coefficient value may or may not be valid for a given assembly. The baseline and assembly coefficient values will be identical only when the relative placement of the components in the assembly is such that aerodynamic interference effects are eliminated. Figures 2–4, 2–7, and 2–8 illustrate interference-free component arrangements for Type S pitot tubes having external tubing diameters between 0.48 and 0.95 cm (3⁄16 and 3⁄8 in.). Type S pitot tube assemblies that fail to meet any or all of the specifications of Figures 2–4, 2–7, and 2-8 shall be calibrated according to the procedure outlined in Sections 10.1.2 through 10.1.5, and prior to calibration, the values of the intercomponent spacings (pitot-nozzle, pitot-thermocouple, pitot-probe sheath) shall be measured and recorded.

Note: Do not use a Type S pitot tube assembly that is constructed such that the impact pressure opening plane of the pitot tube is below the entry plane of the nozzle (see Figure 2–6B).

10.1.2 Calibration Setup. If the Type S pitot tube is to be calibrated, one leg of the tube shall be permanently marked A, and the other, B. Calibration shall be performed in a flow system having the following essential design features:

10.1.2.1 The flowing gas stream must be confined to a duct of definite cross-sectional area, either circular or rectangular. For circular cross sections, the minimum duct diameter shall be 30.48 cm (12 in.); for rectangular cross sections, the width (shorter side) shall be at least 25.4 cm (10 in.).

10.1.2.2 The cross-sectional area of the calibration duct must be constant over a distance of 10 or more duct diameters. For a rectangular cross section, use an equivalent diameter, calculated according to Equation 2–2 (see Section 12.3), to determine the number of duct diameters. To ensure the presence of stable, fully developed flow patterns at the calibration site, or ''test section,'' the site must be located at least eight diameters downstream and two diameters upstream from the nearest disturbances.

Note: The eight- and two-diameter criteria are not absolute; other test section locations may be used (subject to approval of the Administrator), provided that the flow at the test site has been demonstrated to be or found stable and parallel to the duct axis.

10.1.2.3 The flow system shall have the capacity to generate a test-section velocity around 910 m/min (3,000 ft/min). This velocity must be constant with time to guarantee steady flow during calibration. Note that Type S pitot tube coefficients obtained by single-velocity calibration at 910 m/min (3,000 ft/min) will generally be valid to ±3 percent for the measurement of velocities above 300 m/min (1,000 ft/min) and to ±6 percent for the measurement of velocities between 180 and 300 m/min (600 and 1,000 ft/min). If a more precise correlation between the pitot tube coefficient, (C_p), and velocity is desired, the flow system should have the capacity to generate at least four distinct, time-invariant test-section velocities covering the velocity range from 180 to 1,500 m/min (600 to 5,000 ft/min), and calibration data shall be taken at regular velocity intervals over this range (see References 9 and 14 in Section 17.0 for details).

10.1.2.4 Two entry ports, one for each of the standard and Type S pitot tubes, shall be cut in the test section. The standard pitot entry port shall be located slightly downstream of the Type S port, so that the standard and Type S

impact openings will lie in the same cross-sectional plane during calibration. To facilitate alignment of the pitot tubes during calibration, it is advisable that the test section be constructed of Plexiglas™ or some other transparent material.

10.1.3 Calibration Procedure. Note that this procedure is a general one and must not be used without first referring to the special considerations presented in Section 10.1.5. Note also that this procedure applies only to single-velocity calibration. To obtain calibration data for the A and B sides of the Type S pitot tube, proceed as follows:

10.1.3.1 Make sure that the manometer is properly filled and that the oil is free from contamination and is of the proper density. Inspect and leak-check all pitot lines; repair or replace if necessary.

10.1.3.2 Level and zero the manometer. Switch on the fan, and allow the flow to stabilize. Seal the Type S pitot tube entry port.

10.1.3.3 Ensure that the manometer is level and zeroed. Position the standard pitot tube at the calibration point (determined as outlined in Section 10.1.5.1), and align the tube so that its tip is pointed directly into the flow. Particular care should be taken in aligning the tube to avoid yaw and pitch angles. Make sure that the entry port surrounding the tube is properly sealed.

10.1.3.4 Read Δp_{std}, and record its value in a data table similar to the one shown in Figure 2–9. Remove the standard pitot tube from the duct, and disconnect it from the manometer. Seal the standard entry port.

10.1.3.5 Connect the Type S pitot tube to the manometer and leak-check. Open the Type S tube entry port. Check the manometer level and zero. Insert and align the Type S pitot tube so that its A side impact opening is at the same point as was the standard pitot tube and is pointed directly into the flow. Make sure that the entry port surrounding the tube is properly sealed.

10.1.3.6 Read Δp_s, and enter its value in the data table. Remove the Type S pitot tube from the duct, and disconnect it from the manometer.

10.1.3.7 Repeat Steps 10.1.3.3 through 10.1.3.6 until three pairs of Δp readings have been obtained for the A side of the Type S pitot tube.

10.1.3.8 Repeat Steps 10.1.3.3 through 10.1.3.7 for the B side of the Type S pitot tube.

10.1.3.9 Perform calculations as described in Section 12.4. Use the Type S pitot tube only if the values of σ_A and σ_B are less than or equal to 0.01 and if the absolute value of the difference between $\overline{C}_{p(A)}$ and $\overline{C}_{p(B)}$ is 0.01 or less.

10.1.4 Special Considerations.

10.1.4.1 Selection of Calibration Point.

10.1.4.1.1 When an isolated Type S pitot tube is calibrated, select a calibration point at or near the center of the duct, and follow the procedures outlined in Section 10.1.3. The Type S pitot coefficients measured or calculated, (*i.e.* $\overline{C}_{p(A)}$ and $\overline{C}_{p(B)}$) will be valid, so long as either: (1) the isolated pitot tube is used; or (2) the pitot tube is used with other components (nozzle, thermocouple, sample probe) in an arrangement that is free from aerodynamic interference effects (see Figures 2–4, 2–7, and 2–8).

10.1.4.1.2 For Type S pitot tube-thermocouple combinations (without probe assembly), select a calibration point at or near the center of the duct, and follow the procedures outlined in Section 10.1.3. The coefficients so obtained will be valid so long as the pitot tube-thermocouple combination is used by itself or with other components in an interference-free arrangement (Figures 2–4, 2–7, and 2–8).

10.1.4.1.3 For Type S pitot tube combinations with complete probe assemblies, the calibration point should be located at or near the center of the duct; however, insertion of a probe sheath into a small duct may cause significant cross-sectional area interference and blockage and yield incorrect coefficient values (Reference 9 in Section 17.0). Therefore, to minimize the blockage effect, the calibration point may be a few inches off-center if necessary. The actual blockage effect will be negligible when the theoretical blockage, as determined by a projected-area model of the probe sheath, is 2 percent or less of the duct cross-sectional area for assemblies without external sheaths (Figure 2–10a), and 3 percent or less for assemblies with external sheaths (Figure 2–10b).

10.1.4.2 For those probe assemblies in which pitot tube-nozzle interference is a factor (i.e., those in which the pitot-nozzle separation distance fails to meet the specifications illustrated in Figure 2–7A), the value of $C_{p(s)}$ depends upon the amount of free space between the tube and nozzle and, therefore, is a function of nozzle size. In these instances, separate calibrations shall be performed with each of the commonly used nozzle sizes in place. Note that the single-velocity calibration technique is acceptable for this purpose, even though the larger nozzle sizes (>0.635 cm or ¼ in.) are not ordinarily used for isokinetic sampling at velocities around 910 m/min (3,000 ft/min), which is the calibration velocity. Note also that it is not necessary to draw an isokinetic sample during calibration (see Reference 19 in Section 17.0).

10.1.4.3 For a probe assembly constructed such that its pitot tube is always used in the same orientation, only one side of the pitot tube need be calibrated (the side which will face the flow). The pitot tube must still meet the alignment specifications of Figure 2–2 or 2–3, however, and must have an average deviation (σ) value of 0.01 or less (see Section 10.1.4.4).

10.1.5 Field Use and Recalibration.

10.1.5.1 Field Use.

10.1.5.1.1 When a Type S pitot tube (isolated or in an assembly) is used in the field, the appropriate coefficient value (whether assigned or obtained by calibration) shall be used to perform velocity calculations. For calibrated Type S pitot tubes, the A side coefficient shall be used when the A side of the tube faces the flow, and the B side coefficient shall be used when the B side faces the flow. Alternatively, the arithmetic average of the A and B side coefficient values may be used, irrespective of which side faces the flow.

10.1.5.1.2 When a probe assembly is used to sample a small duct, 30.5 to 91.4 cm (12 to 36 in.) in diameter, the probe sheath sometimes blocks a significant part of the duct cross-section, causing a reduction in the effective value of $C_{p(s)}$. Consult Reference 9 (see Section 17.0) for details. Conventional pitot-sampling probe assemblies are not recommended for use in ducts having inside diameters smaller than 30.5 cm (12 in.) (see Reference 16 in Section 17.0).

10.1.5.2 Recalibration.

10.1.5.2.1 Isolated Pitot Tubes. After each field use, the pitot tube shall be carefully reexamined in top, side, and end views. If the pitot face openings are still aligned within the specifications illustrated in Figure 2–2 and Figure 2–3, it can be assumed that the baseline coefficient of the pitot tube has not changed. If, however, the tube has been damaged to the extent that it no longer meets the specifications of Figure 2–2 and Figure 2–3, the damage shall either be repaired to restore proper alignment of the face openings, or the tube shall be discarded.

10.1.5.2.2 Pitot Tube Assemblies. After each field use, check the face opening alignment of the pitot tube, as in Section 10.1.5.2.1. Also, remeasure the intercomponent spacings of the assembly. If the intercomponent spacings have not changed and the face opening alignment is acceptable, it can be assumed that the coefficient of the assembly has not changed. If the face

opening alignment is no longer within the specifications of Figure 2–2 and Figure 2–3, either repair the damage or replace the pitot tube (calibrating the new assembly, if necessary). If the intercomponent spacings have changed, restore the original spacings, or recalibrate the assembly.

10.2 Standard Pitot Tube (if applicable). If a standard pitot tube is used for the velocity traverse, the tube shall be constructed according to the criteria of Section 6.7 and shall be assigned a baseline coefficient value of 0.99. If the standard pitot tube is used as part of an assembly, the tube shall be in an interference-free arrangement (subject to the approval of the Administrator).

10.3 Temperature Sensors.

10.3.1 After each field use, calibrate dial thermometers, liquid-filled bulb thermometers, thermocouple-potentiometer systems, and other sensors at a temperature within 10 percent of the average absolute stack temperature. For temperatures up to 405 °C (761 °F), use an ASTM mercury-in-glass reference thermometer, or equivalent, as a reference. Alternatively, either a reference thermocouple and potentiometer (calibrated against NIST standards) or thermometric fixed points (*e.g.,* ice bath and boiling water, corrected for barometric pressure) may be used. For temperatures above 405°C (761 °F), use a reference thermocouple-potentiometer system calibrated against NIST standards or an alternative reference, subject to the approval of the Administrator.

10.3.2 The temperature data recorded in the field shall be considered valid. If, during calibration, the absolute temperature measured with the sensor being calibrated and the reference sensor agree within 1.5 percent, the temperature data taken in the field shall be considered valid. Otherwise, the pollutant emission test shall either be considered invalid or adjustments (if appropriate) of the test results shall be made, subject to the approval of the Administrator.

10.4 Barometer. Calibrate the barometer used against a mercury barometer.

11.0 Analytical Procedure

Sample collection and analysis are concurrent for this method (see Section 8.0).

12.0 Data Analysis and Calculations

Carry out calculations, retaining at least one extra significant figure beyond that of the acquired data. Round off figures after final calculation.

12.1 Nomenclature.

A = Cross-sectional area of stack, m^2 (ft^2).

B_{ws} = Water vapor in the gas stream (from Method 4 (reference method) or Method 5), proportion by volume.

C_p = Pitot tube coefficient, dimensionless.

$C_{p(s)}$ = Type S pitot tube coefficient, dimensionless.

$C_{p(std)}$ = Standard pitot tube coefficient; use 0.99 if the coefficient is unknown and the tube is designed according to the criteria of Sections 6.7.1 to 6.7.5 of this method.

D_e = Equivalent diameter.

K = 0.127 mm H_2O (metric units). 0.005 in. H_2O (English units).

K_p = Velocity equation constant.

L = Length.

M_d = Molecular weight of stack gas, dry basis (see Section 8.6), g/g-mole (lb/lb-mole).

M_s = Molecular weight of stack gas, wet basis, g/g-mole (lb/lb-mole).

n = Total number of traverse points.

P_{bar} = Barometric pressure at measurement site, mm Hg (in. Hg).

P_g = Stack static pressure, mm Hg (in. Hg).

P_s = Absolute stack pressure ($P_{bar} + P_g$), mm Hg (in. Hg),

P_{std} = Standard absolute pressure, 760 mm Hg (29.92 in. Hg).

Q_{sd} = Dry volumetric stack gas flow rate corrected to standard conditions, dscm/hr (dscf/hr).

T = Sensitivity factor for differential pressure gauges.

T_s = Stack temperature, °C (°F).

$T_{s(abs)}$ = Absolute stack temperature, °K (°R).

= 273 + T_s for metric units,

= 460 + T_s for English units.

T_{std} = Standard absolute temperature, 293 °K (528 °R).

V_s = Average stack gas velocity, m/sec (ft/sec).

W = Width.

Δp = Velocity head of stack gas, mm H_2O (in. H_{20}).

Δp_i = Individual velocity head reading at traverse point ''i'', mm (in.) H_2O.

Δp_{std} = Velocity head measured by the standard pitot tube, cm (in.) H_2O.

Δp_s = Velocity head measured by the Type S pitot tube, cm (in.) H_2O.

3600 = Conversion Factor, sec/hr.

18.0 = Molecular weight of water, g/g-mole (lb/lb-mole).

12.2 Calculate T as follows:

$$T = \frac{\sum_{i=1}^{n} \sqrt{\Delta p_i + K}}{\sum_{i=1}^{n} \sqrt{\Delta p_i}} \qquad \text{Eq. 2-1}$$

12.3 Calculate D_e as follows:

$$D_e = \frac{2LW}{L + W} \qquad \text{Eq. 2-2}$$

12.4 Calibration of Type S Pitot Tube.

12.4.1 For each of the six pairs of Δp readings (i.e., three from side A and three from side B) obtained in Section 10.1.3, calculate the value of the Type S pitot tube coefficient according to Equation 2–3:

$$C_{p(s)} = C_{p(std)} \sqrt{\frac{\Delta p_{std}}{\Delta p}} \qquad \text{Eq. 2-3}$$

12.4.2 Calculate $\overline{C}_{p(A)}$, the mean A-side coefficient, and $\overline{C}_{p(B)}$, the mean B-side coefficient. Calculate the difference between these two average values.

12.4.3 Calculate the deviation of each of the three A-side values of $C_{p(s)}$ from $\overline{C}_{p(A)}$, and the deviation of each of the three B-side values of $C_{p(s)}$ from $\overline{C}_{p(B)}$, using Equation 2–4:

$$\text{Deviation} = C_{p(s)} - \overline{C}_{p(A \text{ or } B)} \qquad \text{Eq. 2-4}$$

12.4.4 Calculate σ the average deviation from the mean, for both the A and B sides of the pitot tube. Use Equation 2–5:

$$\sigma_{A \text{ or } B} = \frac{\sum_{i=1}^{3} \left| C_{p(s)} - \overline{C}_{p(A \text{ or } B)} \right|}{3} \qquad \text{Eq. 2-5}$$

12.5 Molecular Weight of Stack Gas.

$$M_s = M_d (1 - B_{ws}) + 18.0\ B_{ws} \qquad \text{Eq. 2-6}$$

12.6 Average Stack Gas Velocity.

$$V_s = K_p C_p \sqrt{\Delta p_{avg}} \sqrt{\frac{T_{s(abs)}}{P_s M_s}} \qquad \text{Eq. 2-7}$$

$$34.97 \frac{m}{sec} \left[\frac{(g/g \cdot mole)(mmHg)}{(^\circ K)(mmH_2O)} \right]^{\frac{1}{2}} \qquad \text{Metric}$$

$$85.49 \frac{m}{sec} \left[\frac{(1b/1b\text{-}mole)(in.Hg)}{(^\circ R)(in.\ H_2O)} \right]^{\frac{1}{2}} \qquad \text{English}$$

12.7 Average Stack Gas Dry Volumetric Flow Rate.

$$Q = 3600(1 - B_{ws}) v_s A \left[\frac{T_{std} P_s}{T_{s(abs)} P_{std}} \right] \qquad \text{Eq. 2-8}$$

13.0 Method Performance [Reserved]

14.0 Pollution Prevention [Reserved]

15.0 Waste Management [Reserved]

16.0 References

1. Mark, L.S. Mechanical Engineers' Handbook. New York. McGraw-Hill Book Co., Inc. 1951.
2. Perry, J.H., ed. Chemical Engineers' Handbook. New York. McGraw-Hill Book Co., Inc. 1960.
3. Shigehara, R.T., W.F. Todd, and W.S. Smith. Significance of Errors in Stack Sampling Measurements. U.S. Environmental Protection Agency, Research Triangle Park, N.C. (Presented at the Annual Meeting of the Air Pollution Control Association, St. Louis, MO., June 14–19, 1970).
4. Standard Method for Sampling Stacks for Particulate Matter. In: 1971 Book of ASTM Standards, Part 23. Philadelphia, PA. 1971. ASTM Designation D 2928–71.
5. Vennard, J.K. Elementary Fluid Mechanics. New York. John Wiley and Sons, Inc. 1947.
6. Fluid Meters—Their Theory and Application. American Society of Mechanical Engineers, New York, N.Y. 1959.
7. ASHRAE Handbook of Fundamentals. 1972. p. 208.
8. Annual Book of ASTM Standards, Part 26. 1974. p. 648.
9. Vollaro, R.F. Guidelines for Type S Pitot Tube Calibration. U.S. Environmental Protection Agency, Research Triangle Park, N.C. (Presented at 1st Annual Meeting, Source Evaluation Society, Dayton, OH, September 18, 1975.)
10. Vollaro, R.F. A Type S Pitot Tube Calibration Study. U.S. Environmental Protection Agency, Emission Measurement Branch, Research Triangle Park, N.C. July 1974.
11. Vollaro, R.F. The Effects of Impact Opening Misalignment on the Value of the Type S Pitot Tube Coefficient. U.S. Environmental Protection Agency, Emission Measurement Branch, Research Triangle Park, NC. October 1976.
12. Vollaro, R.F. Establishment of a Baseline Coefficient Value for Properly Constructed Type S Pitot Tubes. U.S. Environmental Protection Agency, Emission Measurement Branch, Research Triangle Park, NC. November 1976.
13. Vollaro, R.F. An Evaluation of Single-Velocity Calibration Technique as a Means of Determining Type S Pitot Tube Coefficients. U.S. Environmental Protection Agency, Emission Measurement Branch, Research Triangle Park, NC. August 1975.
14. Vollaro, R.F. The Use of Type S Pitot Tubes for the Measurement of Low Velocities. U.S. Environmental Protection Agency, Emission Measurement Branch, Research Triangle Park, NC. November 1976.
15. Smith, Marvin L. Velocity Calibration of EPA Type Source Sampling Probe. United Technologies Corporation, Pratt and Whitney Aircraft Division, East Hartford, CT. 1975.
16. Vollaro, R.F. Recommended Procedure for Sample Traverses in Ducts Smaller than 12 Inches in Diameter. U.S. Environmental Protection Agency, Emission Measurement Branch, Research Triangle Park, NC. November 1976.
17. Ower, E. and R.C. Pankhurst. The Measurement of Air Flow, 4th Ed. London, Pergamon Press. 1966.
18. Vollaro, R.F. A Survey of Commercially Available Instrumentation for the Measurement of Low-Range Gas Velocities. U.S. Environmental Protection Agency, Emission Measurement Branch, Research Triangle Park, NC. November 1976. (Unpublished Paper).
19. Gnyp, A.W., et al. An Experimental Investigation of the Effect of Pitot Tube-Sampling Probe Configurations on the Magnitude of the S Type Pitot Tube Coefficient for Commercially Available Source Sampling Probes. Prepared by the University of Windsor for the Ministry of the Environment, Toronto, Canada. February 1975.

17.0 Tables, Diagrams, Flowcharts, and Validation Data

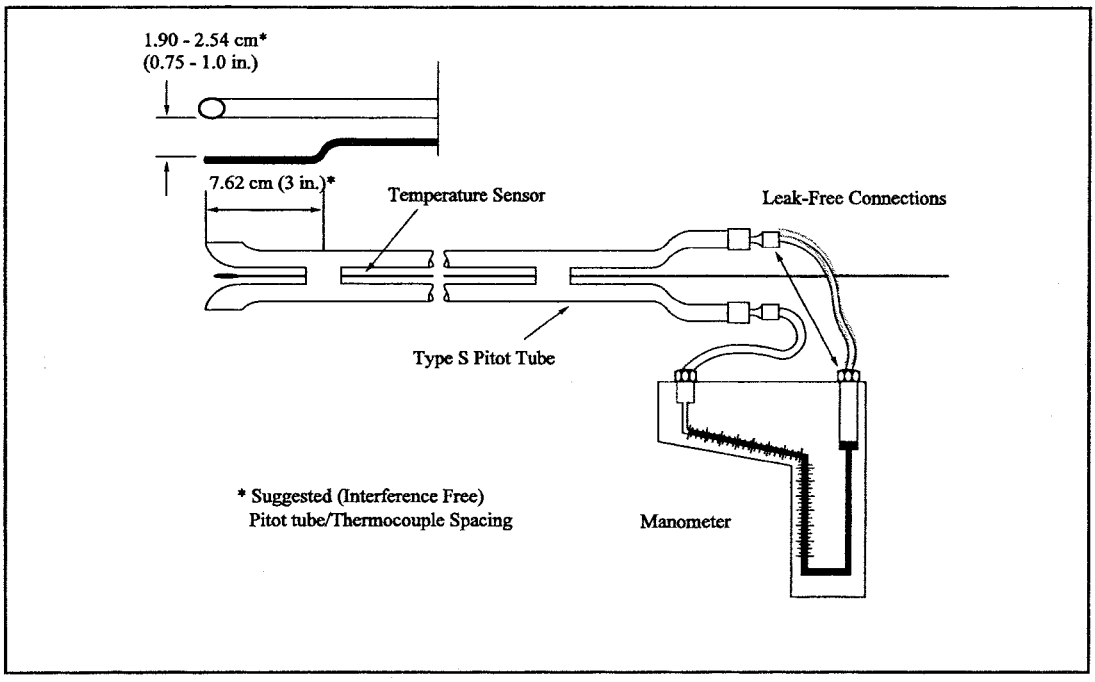

Figure 2-1. Type S Pitot Tube Manometer Assembly.

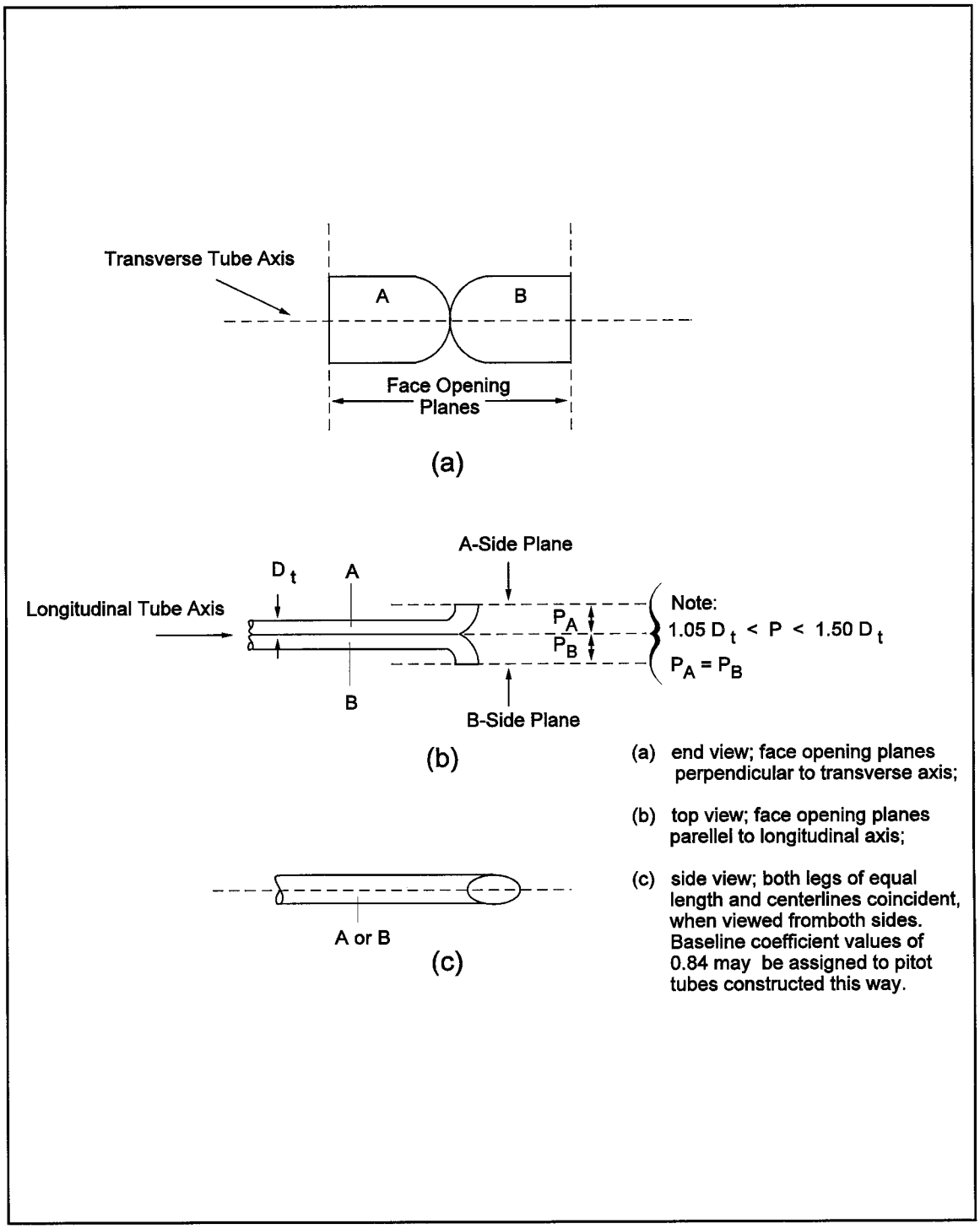

Figure 2-2. Properly Constructed Type S Pitot Tube.

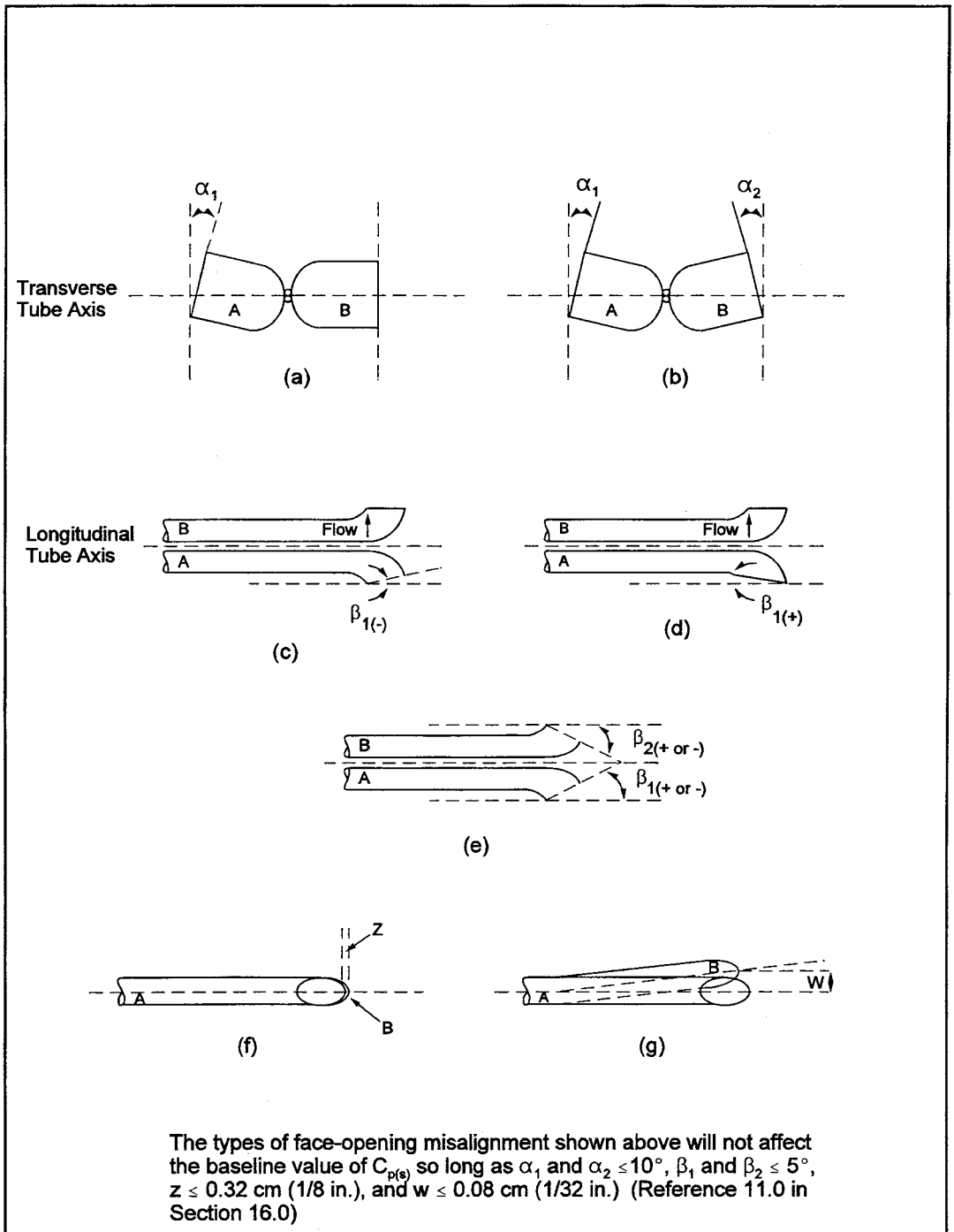

The types of face-opening misalignment shown above will not affect the baseline value of $C_{p(s)}$ so long as α_1 and $\alpha_2 \leq 10°$, β_1 and $\beta_2 \leq 5°$, $z \leq 0.32$ cm (1/8 in.), and $w \leq 0.08$ cm (1/32 in.) (Reference 11.0 in Section 16.0)

Figure 2-3. Types of face-opening misalignments that can result from field use or improper construction of type S pitot tubes.

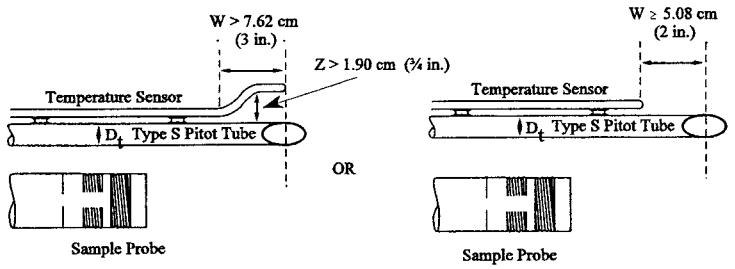

Figure 2-4. Proper temperature sensor placement to prevent interference; D_t between 0.48 and 0.95 cm (3/16 and 3/8 in).

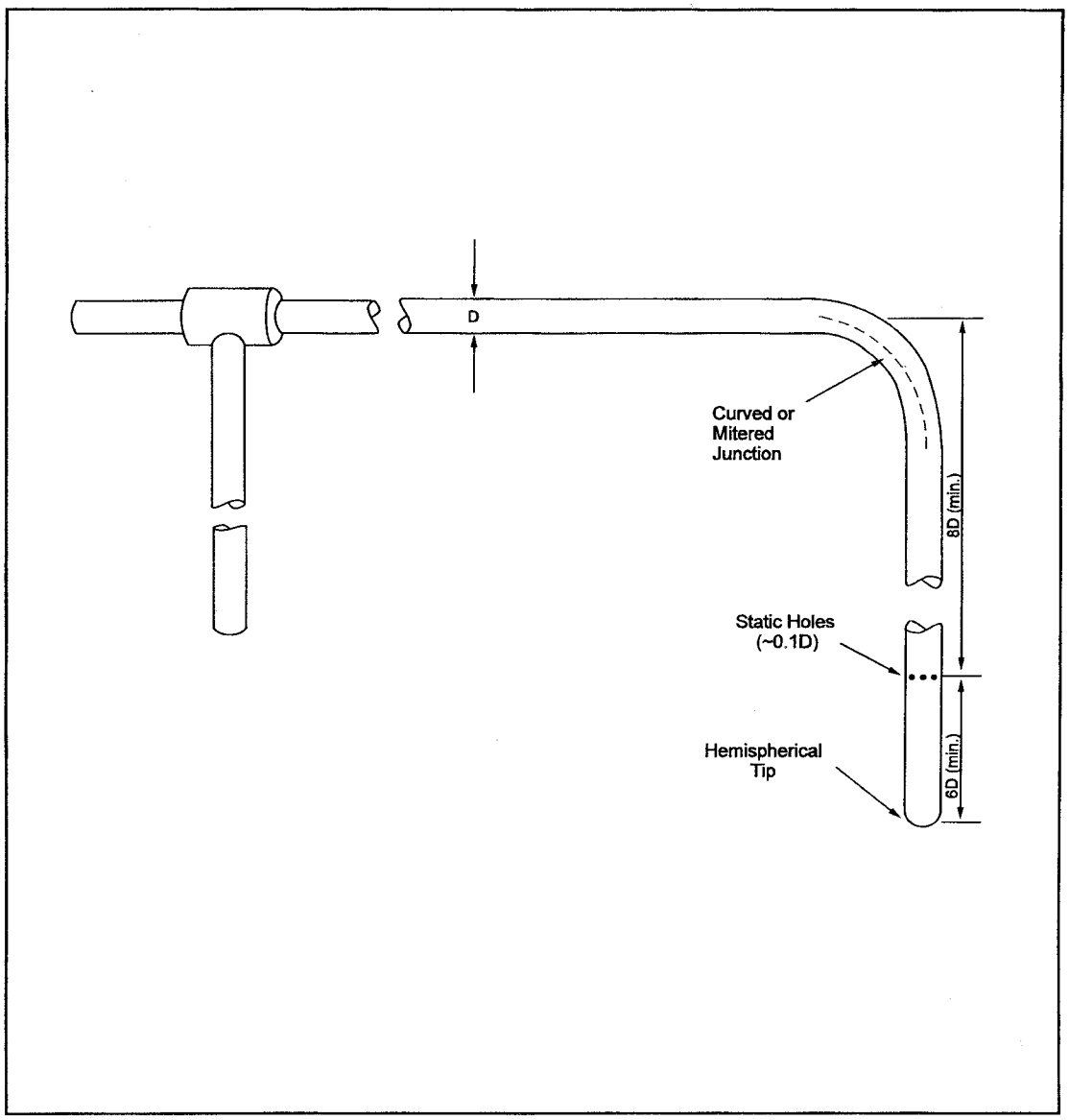

Figure 2-5. Standard pitot tube design specifications.

PLANT
DATE
RUN NO.
STACK DIA. OR DIMENSIONS, m (in.)
BAROMETRIC PRESS., mm Hg (in. Hg)
CROSS SECTIONAL AREA, m^2 (ft^2)
OPERATORS
PITOT TUBE I.D. NO.
AVG. COEFFICIENT, Cp =
LAST DATE CALIBRATED

SCHEMATIC OF STACK CROSS SECTION

Traverse Pt. No.	Vel. Hd., Δp mm (in.) H_2O	Stack temperature		P_g mm Hg (in. Hg)	$(\Delta p)^{1/2}$
		T_s, °C (°F)	T_s, °K (°R)		
	Average(1)				

Figure 2–6. Velocity Traverse Data

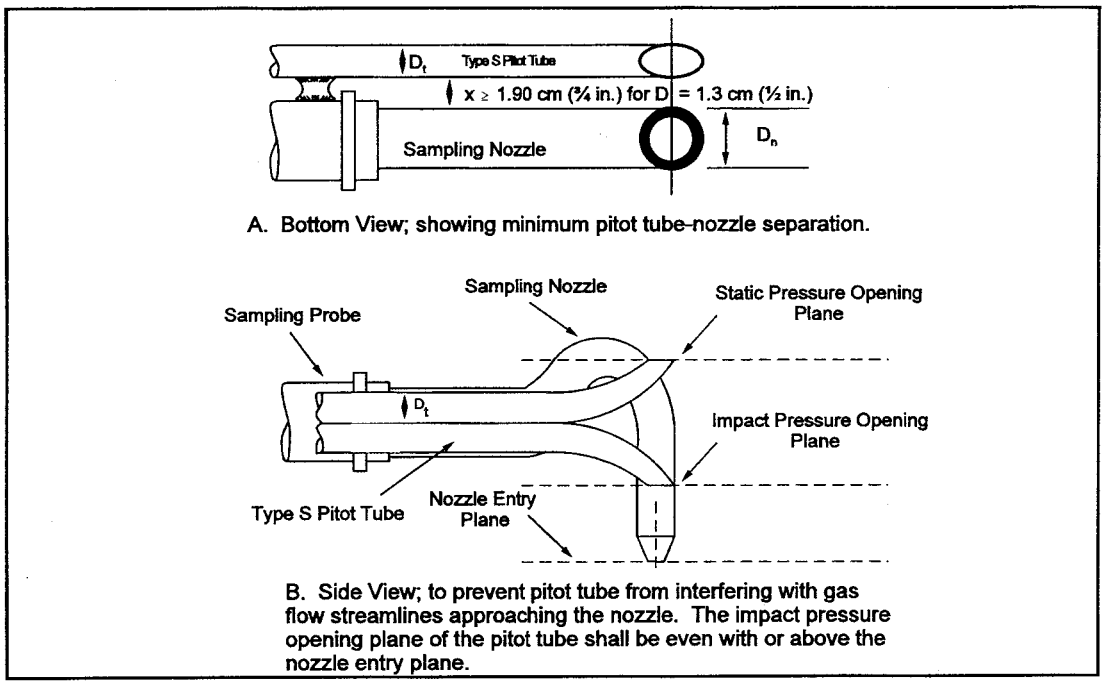

Figure 2-7. Proper pitot tube-sampling nozzle configuration.

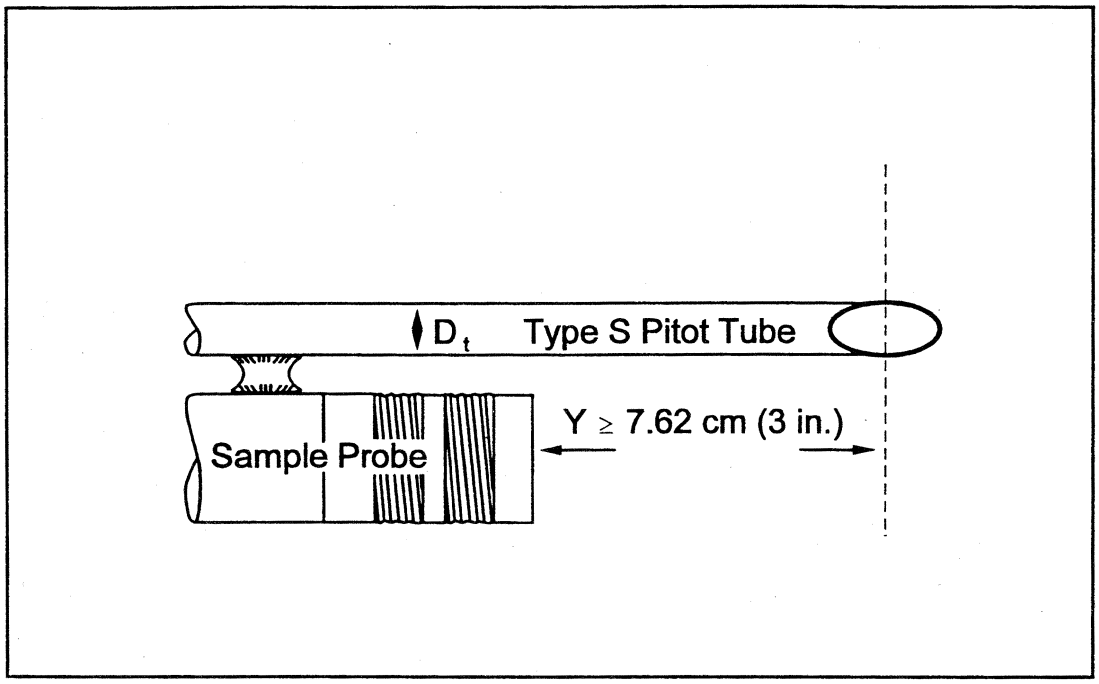

Figure 2-8. Minimum pitot-sample probe separation needed to prevent interference; D_t between 0.48 and 0.95 cm (3/16 and 3/8 in).

PITOT TUBE IDENTIFICATION NUMBER:
DATE:
CALIBRATED BY:

"A" SIDE CALIBRATION

Run No.	ΔP_{std} cm H_2O (in H_2O)	$\Delta P(_s)$ cm H_2O (in H_2O)	$C_{p(s)}$	Deviation $C_{p(s)}$—C_p(A)
1				
2				
3				
		$C_{p,\ avg}$ (SIDE A)		

"B" SIDE CALIBRATION

Run No.	ΔP_{std} cm H_2O (in H_2O)	$\Delta P_{(s)}$ cm H_2O (in H_2O)	$C_{p(s)}$	Deviation $C_{p(s)}$—C_p(B)
1				
2				
3				
		$C_{p,\ avg}$ (SIDE B)		

$$\sigma_{A\ or\ B} = \frac{\sum_{i=1}^{3}\left|C_{p(s)} - \overline{C}_{p\ (A\ or\ B)}\right|}{3} \qquad \text{Eq. 2-5}$$

[Cp, avg (side A)—Cp, avg (side B)]*

*Must be less than or equal to 0.01

Figure 2–9. Pitot Tube Calibration Data

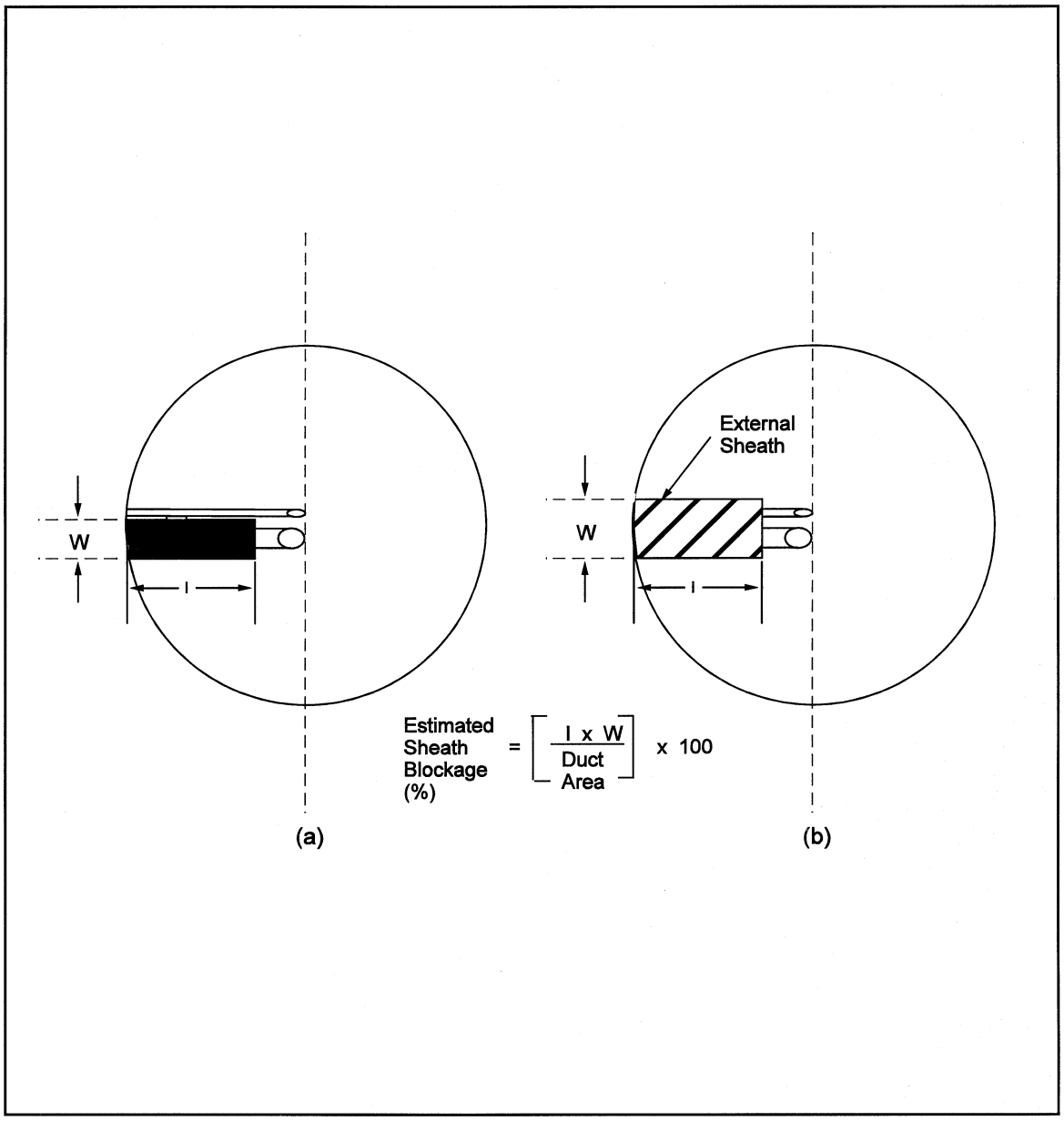

Figure 2-10. Projected-area models for typical pitot tube assemblies.

Method 2A—Direct Measurement of Gas Volume Through Pipes and Small Ducts

Note: This method does not include all of the specifications (*e.g.*, equipment and supplies) and procedures (*e.g.*, sampling) essential to its performance. Some material is incorporated by reference from other methods in this part. Therefore, to obtain reliable results, persons using this method should have a thorough knowledge of at least the following additional test methods: Method 1, Method 2.

1.0 Scope and Application

1.1 This method is applicable for the determination of gas flow rates in pipes and small ducts, either in-line or at exhaust positions, within the temperature range of 0 to 50 °C (32 to 122 °F).

1.2 Data Quality Objectives. Adherence to the requirements of this method will enhance the quality of the data obtained from air pollutant sampling methods.

2.0 Summary of Method

2.1 A gas volume meter is used to measure gas volume directly. Temperature and pressure measurements are made to allow correction of the volume to standard conditions.

3.0 Definitions [Reserved]

4.0 Interferences [Reserved]

5.0 Safety

5.1 Disclaimer. This method may involve hazardous materials, operations, and equipment. This test method may

not address all of the safety problems associated with its use. It is the responsibility of the user of this test method to establish appropriate safety and health practices and determine the applicability of regulatory limitations prior to performing this test method.

6.0 Equipment and Supplies

Specifications for the apparatus are given below. Any other apparatus that has been demonstrated (subject to approval of the Administrator) to be capable of meeting the specifications will be considered acceptable.

6.1 Gas Volume Meter. A positive displacement meter, turbine meter, or other direct measuring device capable of measuring volume to within 2 percent. The meter shall be equipped with a temperature sensor (accurate to within ±2 percent of the minimum absolute temperature) and a pressure gauge (accurate to within ±2.5 mm Hg). The manufacturer's recommended capacity of the meter shall be sufficient for the expected maximum and minimum flow rates for the sampling conditions. Temperature, pressure, corrosive characteristics, and pipe size are factors necessary to consider in selecting a suitable gas meter.

6.2 Barometer. A mercury, aneroid, or other barometer capable of measuring atmospheric pressure to within ±2.5 mm Hg.

Note: In many cases, the barometric reading may be obtained from a nearby National Weather Service station, in which case the station value (which is the absolute barometric pressure) shall be requested and an adjustment for elevation differences between the weather station and sampling point shall be applied at a rate of minus 2.5 mm (0.1 in.) Hg per 30 m (100 ft) elevation increase or vice versa for elevation decrease.

6.3 Stopwatch. Capable of measurement to within 1 second.

7.0 Reagents and Standards [Reserved]

8.0 Sample Collection and Analysis

8.1 Installation. As there are numerous types of pipes and small ducts that may be subject to volume measurement, it would be difficult to describe all possible installation schemes. In general, flange fittings should be used for all connections wherever possible. Gaskets or other seal materials should be used to assure leak-tight connections. The volume meter should be located so as to avoid severe vibrations and other factors that may affect the meter calibration.

8.2 Leak Test.

8.2.1 A volume meter installed at a location under positive pressure may be leak-checked at the meter connections by using a liquid leak detector solution containing a surfactant. Apply a small amount of the solution to the connections. If a leak exists, bubbles will form, and the leak must be corrected.

8.2.2 A volume meter installed at a location under negative pressure is very difficult to test for leaks without blocking flow at the inlet of the line and watching for meter movement. If this procedure is not possible, visually check all connections to assure leak-tight seals.

8.3 Volume Measurement.

8.3.1 For sources with continuous, steady emission flow rates, record the initial meter volume reading, meter temperature(s), meter pressure, and start the stopwatch. Throughout the test period, record the meter temperatures and pressures so that average values can be determined. At the end of the test, stop the timer, and record the elapsed time, the final volume reading, meter temperature, and pressure. Record the barometric pressure at the beginning and end of the test run. Record the data on a table similar to that shown in Figure 2A–1.

8.3.2 For sources with noncontinuous, non-steady emission flow rates, use the procedure in Section 8.3.1 with the addition of the following: Record all the meter parameters and the start and stop times corresponding to each process cyclical or noncontinuous event.

9.0 Quality Control

Section	Quality control measure	Effect
10.1–10.4	Sampling equipment calibration	Ensure accurate measurement of stack gas flow rate, sample volume.

10.0 Calibration and Standardization

10.1 Volume Meter.

10.1.1 The volume meter is calibrated against a standard reference meter prior to its initial use in the field. The reference meter is a spirometer or liquid displacement meter with a capacity consistent with that of the test meter.

10.1.2 Alternatively, a calibrated, standard pitot may be used as the reference meter in conjunction with a wind tunnel assembly. Attach the test meter to the wind tunnel so that the total flow passes through the test meter. For each calibration run, conduct a 4-point traverse along one stack diameter at a position at least eight diameters of straight tunnel downstream and two diameters upstream of any bend, inlet, or air mover. Determine the traverse point locations as specified in Method 1. Calculate the reference volume using the velocity values following the procedure in Method 2, the wind tunnel cross-sectional area, and the run time.

10.1.3 Set up the test meter in a configuration similar to that used in the field installation (*i.e.,* in relation to the flow moving device). Connect the temperature sensor and pressure gauge as they are to be used in the field. Connect the reference meter at the inlet of the flow line, if appropriate for the meter, and begin gas flow through the system to condition the meters. During this conditioning operation, check the system for leaks.

10.1.4 The calibration shall be performed during at least three different flow rates. The calibration flow rates shall be about 0.3, 0.6, and 0.9 times the rated maximum flow rate of the test meter.

10.1.5 For each calibration run, the data to be collected include: reference meter initial and final volume readings, the test meter initial and final volume reading, meter average temperature and pressure, barometric pressure, and run time. Repeat the runs at each flow rate at least three times.

10.1.6 Calculate the test meter calibration coefficient as indicated in Section 12.2.

10.1.7 Compare the three Y_m values at each of the flow rates tested and determine the maximum and minimum values. The difference between the maximum and minimum values at each flow rate should be no greater than 0.030. Extra runs may be required to complete this requirement. If this specification cannot be met in six successive runs, the test meter is not suitable for use. In addition, the meter coefficients should be between 0.95 and 1.05. If these specifications are met at all the flow rates, average all the Y_m values from runs meeting the specifications to obtain an average meter calibration coefficient, Y_m.

10.1.8 The procedure above shall be performed at least once for each volume meter. Thereafter, an abbreviated calibration check shall be completed

following each field test. The calibration of the volume meter shall be checked with the meter pressure set at the average value encountered during the field test. Three calibration checks (runs) shall be performed using this average flow rate value. Calculate the average value of the calibration factor. If the calibration has changed by more than 5 percent, recalibrate the meter over the full range of flow as described above.

Note: If the volume meter calibration coefficient values obtained before and after a test series differ by more than 5 percent, the test series shall either be voided, or calculations for the test series shall be performed using whichever meter coefficient value (*i.e.,* before or after) gives the greater value of pollutant emission rate.

10.2 Temperature Sensor. After each test series, check the temperature sensor at ambient temperature. Use an American Society for Testing and Materials (ASTM) mercury-in-glass reference thermometer, or equivalent, as a reference. If the sensor being checked agrees within 2 percent (absolute temperature) of the reference, the temperature data collected in the field shall be considered valid. Otherwise, the test data shall be considered invalid or adjustments of the results shall be made, subject to the approval of the Administrator.

10.3 Barometer. Calibrate the barometer used against a mercury barometer prior to the field test.

11.0 Analytical Procedure

Sample collection and analysis are concurrent for this method (see Section 8.0).

12.0 Data Analysis and Calculations

Carry out calculations, retaining at least one extra decimal figure beyond that of the acquired data. Round off figures after final calculation.

12.1 Nomenclature.

f = Final reading.

i = Initial reading.

P_{bar} = Barometric pressure, mm Hg.

P_g = Average static pressure in volume meter, mm Hg.

Q_s = Gas flow rate, m^3/min, standard conditions.

s = Standard conditions, 20°C and 760 mm Hg.

T_r = Reference meter average temperature, °K (°R).

T_m = Test meter average temperature, °K (°R).

V_r = Reference meter volume reading, m^3.

V_m = Test meter volume reading, m^3.

Y_m = Test meter calibration coefficient, dimensionless.

θ = Elapsed test period time, min.

12.2 Test Meter Calibration Coefficient.

$$Y_m = \frac{\left(V_{r_f} - V_{r_i}\right) P_b T_{r(abs)}}{\left(V_{m_f} - V_{m_i}\right)\left(P_b + P_g\right) T_{m(abs)}} \qquad \text{Eq. 2A-1}$$

12.3 Volume.

$$Y_{m_s} = Y_m \left[\frac{\left(P_{bar} + P_g\right)\left(V_{m_f} - V_{m_i}\right)(293\ ^\circ K)}{\left(T_m\right)(760\ \text{mmHg})} \right] \qquad \text{Eq. 2-2}$$

12.4 Gas Flow Rate.

$$Q_s = \frac{V_{m_s}}{\theta} \qquad \text{Eq. 2A-3}$$

13.0 Method Performance. [Reserved]

14.0 Pollution Prevention. [Reserved]

15.0 Waste Management. [Reserved]

16.0 References

1. Rom, Jerome J. Maintenance, Calibration, and Operation of Isokinetic Source Sampling Equipment. U.S. Environmental Protection Agency, Research Triangle Park, NC. Publication No. APTD–0576. March 1972.

2. Wortman, Martin, R. Vollaro, and P.R. Westlin. Dry Gas Volume Meter Calibrations. Source Evaluation Society Newsletter. Vol. 2, No. 2. May 1977.

3. Westlin, P.R., and R.T. Shigehara. Procedure for Calibrating and Using Dry Gas Volume Meters as Calibration Standards. Source Evaluation Society Newsletter. Vol. 3, No. 1. February 1978.

17.0 Tables, Diagrams, Flowcharts, and Validation Data [Reserved]

Method 2B—Determination of Exhaust Gas Volume Flow Rate From Gasoline Vapor Incinerators

Note: This method does not include all of the specifications (*e.g.,* equipment and supplies) and procedures (*e.g.,* sampling and analytical) essential to its performance. Some material is incorporated by reference from other methods in this part. Therefore, to obtain reliable results, persons using this method should also have a thorough knowledge of at least the following additional test methods: Method 1, Method 2, Method 2A, Method 10, Method 25A, Method 25B.

1.0 Scope and Application

1.1 This method is applicable for the determination of exhaust volume flow rate from incinerators that process gasoline vapors consisting primarily of alkanes, alkenes, and/or arenes (aromatic hydrocarbons). It is assumed that the amount of auxiliary fuel is negligible.

1.2 Data Quality Objectives. Adherence to the requirements of this method will enhance the quality of the data obtained from air pollutant sampling methods.

2.0 Summary of Method

2.1 Organic carbon concentration and volume flow rate are measured at the incinerator inlet using either Method 25A or Method 25B and Method 2A, respectively. Organic carbon, carbon dioxide (CO_2), and carbon monoxide (CO) concentrations are measured at the outlet using either Method 25A or Method 25B and Method 10, respectively. The ratio of total carbon at the incinerator inlet and outlet is multiplied by the inlet volume to determine the exhaust volume flow rate.

3.0 Definitions

Same as Section 3.0 of Method 10 and Method 25A.

4.0 Interferences

Same as Section 4.0 of Method 10.

5.0 Safety

5.1 This method may involve hazardous materials, operations, and equipment. This test method may not address all of the safety problems associated with its use. It is the responsibility of the user of this test method to establish appropriate safety and health practices and determine the applicability of regulatory limitations prior to performing this test method.

6.0 Equipment and Supplies

Same as Section 6.0 of Method 2A, Method 10, and Method 25A and/or Method 25B as applicable, with the addition of the following:

6.1 This analyzer must meet the specifications set forth in Section 6.1.2 of Method 10, except that the span shall be 15 percent CO_2 by volume.

7.0 Reagents and Standards

Same as Section 7.0 of Method 10 and Method 25A, with the following addition and exceptions:

7.1 Carbon Dioxide Analyzer Calibration. CO_2 gases meeting the specifications set forth in Section 7 of Method 6C are required.

7.2 Hydrocarbon Analyzer Calibration. Methane shall not be used as a calibration gas when performing this method.

7.3 Fuel Gas. If Method 25B is used to measure the organic carbon concentrations at both the inlet and exhaust, no fuel gas is required.

8.0 Sample Collection and Analysis

8.1 Pre-test Procedures. Perform all pre-test procedures (*e.g.*, system performance checks, leak checks) necessary to determine gas volume flow rate and organic carbon concentration in the vapor line to the incinerator inlet and to determine organic carbon, carbon monoxide, and carbon dioxide concentrations at the incinerator exhaust, as outlined in Method 2A, Method 10, and Method 25A and/or Method 25B as applicable.

8.2 Sampling. At the beginning of the test period, record the initial parameters for the inlet volume meter according to the procedures in Method 2A and mark all of the recorder strip charts to indicate the start of the test. Conduct sampling and analysis as outlined in Method 2A, Method 10, and Method 25A and/or Method 25B as applicable. Continue recording inlet organic and exhaust CO_2, CO, and organic concentrations throughout the test. During periods of process interruption and halting of gas flow, stop the timer and mark the recorder strip charts so that data from this interruption are not included in the calculations. At the end of the test period, record the final parameters for the inlet volume meter and mark the end on all of the recorder strip charts.

8.3 Post-test Procedures. Perform all post-test procedures (*e.g.*, drift tests, leak checks), as outlined in Method 2A, Method 10, and Method 25A and/or Method 25B as applicable.

9.0 Quality Control

Same as Section 9.0 of Method 2A, Method 10, and Method 25A.

10.0 Calibration and Standardization

Same as Section 10.0 of Method 2A, Method 10, and Method 25A.

Note: If a manifold system is used for the exhaust analyzers, all the analyzers and sample pumps must be operating when the analyzer calibrations are performed.

10.1 If an analyzer output does not meet the specifications of the method, invalidate the test data for the period. Alternatively, calculate the exhaust volume results using initial calibration data and using final calibration data and report both resulting volumes. Then, for emissions calculations, use the volume measurement resulting in the greatest emission rate or concentration.

11.0 Analytical Procedure

Sample collection and analysis are concurrent for this method (see Section 8.0).

12.0 Data Analysis and Calculations

Carry out the calculations, retaining at least one extra decimal figure beyond that of the acquired data. Round off figures after the final calculation.

12.1 Nomenclature.

Co_e = Mean carbon monoxide concentration in system exhaust, ppm.

$(CO_2)_2$ = Ambient carbon dioxide concentration, ppm (if not measured during the test period, may be assumed to equal 300 ppm).

$(CO_2)_e$ = Mean carbon dioxide concentration in system exhaust, ppm.

HC_e = Mean organic concentration in system exhaust as defined by the calibration gas, ppm.

Hc_i = Mean organic concentration in system inlet as defined by the calibration gas, ppm.

K_e = Hydrocarbon calibration gas factor for the exhaust hydrocarbon analyzer, unitless [equal to the number of carbon atoms per molecule of the gas used to calibrate the analyzer (2 for ethane, 3 for propane, etc.)].

K_i = Hydrocarbon calibration gas factor for the inlet hydrocarbon analyzer, unitless.

V_{es} = Exhaust gas volume, m^3.

V_{is} = Inlet gas volume, m^3.

Q_{es} = Exhaust gas volume flow rate, m^3/min.

Q_{is} = Inlet gas volume flow rate, m^3/min.

θ = Sample run time, min.

s = Standard conditions: 20 °C, 760 mm Hg.

12.2 Concentrations. Determine mean concentrations of inlet organics, outlet CO_2, outlet CO, and outlet organics according to the procedures in the respective methods and the analyzers' calibration curves, and for the time intervals specified in the applicable regulations.

12.3 Exhaust Gas Volume. Calculate the exhaust gas volume as follows:

$$V_{es} = V_{is}\frac{K_i(HC_i)}{K_e(HC_e)+\left[(CO_2)_e-(CO_2)_a\right]+CO_e} \qquad \text{Eq. 2B-1}$$

12.4 Exhaust Gas Volume Flow Rate. Calculate the exhaust gas volume flow rate as follows:

$$Q_{es} = \frac{V_{es}}{\Theta} \qquad \text{Eq. 2B-2}$$

13.0 Method Performance [Reserved]

14.0 Pollution Prevention [Reserved]

15.0 Waste Management [Reserved]

16.0 References

Same as Section 16.0 of Method 2A, Method 10, and Method 25A.

17.0 Tables, Diagrams, Flowcharts, and Validation Data [Reserved]

Method 2C—Determination of Gas Velocity and Volumetric Flow Rate in Small Stacks or Ducts (Standard Pitot Tube)

Note: This method does not include all of the specifications (e.g., equipment and supplies) and procedures (e.g., sampling) essential to its performance. Some material is incorporated by reference from other methods in this part. Therefore, to obtain reliable results, persons using this method should also have a thorough knowledge of at least the following additional test methods: Method 1, Method 2.

1.0 Scope and Application

1.1 This method is applicable for the determination of average velocity and volumetric flow rate of gas streams in small stacks or ducts. Limits on the applicability of this method are identical to those set forth in Method 2, Section 1.0, except that this method is limited to stationary source stacks or ducts less than about 0.30 meter (12 in.) in diameter, or 0.071 m^2 (113 $in.^2$) in cross-sectional area, but equal to or greater than about 0.10 meter (4 in.) in diameter, or 0.0081 m^2 (12.57 $in.^2$) in cross-sectional area.

1.2 Data Quality Objectives. Adherence to the requirements of this method will enhance the quality of the data obtained from air pollutant sampling methods.

2.0 Summary of Method

2.1 The average gas velocity in a stack or duct is determined from the gas density and from measurement of velocity heads with a standard pitot tube.

3.0 Definitions [Reserved]

4.0 Interferences [Reserved]

5.0 Safety

5.1 This method may involve hazardous materials, operations, and equipment. This test method may not address all of the safety problems associated with its use. It is the responsibility of the user of this test method to establish appropriate safety and health practices and determine the applicability of regulatory limitations prior to performing this test method.

6.0 Equipment and Supplies

Same as Method 2, Section 6.0, with the exception of the following:

6.1 Standard Pitot Tube (instead of Type S). A standard pitot tube which meets the specifications of Section 6.7 of Method 2. Use a coefficient of 0.99 unless it is calibrated against another standard pitot tube with a NIST-traceable coefficient (see Section 10.2 of Method 2).

6.2 Alternative Pitot Tube. A modified hemispherical-nosed pitot tube (see Figure 2C–1), which features a shortened stem and enlarged impact and static pressure holes. Use a coefficient of 0.99 unless it is calibrated as mentioned in Section 6.1 above. This pitot tube is useful in particulate liquid droplet-laden gas streams when a ''back purge'' is ineffective.

7.0 Reagents and Standards [Reserved]

8.0 Sample Collection and Analysis

8.1 Follow the general procedures in Section 8.0 of Method 2, except conduct the measurements at the traverse points specified in Method 1A. The static and impact pressure holes of standard pitot tubes are susceptible to plugging in particulate-laden gas streams. Therefore, adequate proof that the openings of the pitot tube have not plugged during the traverse period must be furnished; this can be done by taking the velocity head (Δp) heading at the final traverse point, cleaning out the impact and static holes of the standard pitot tube by ''back-purging'' with pressurized air, and then taking another Δp reading. If the Δp readings made before and after the air purge are the same (within ±5 percent) the traverse is acceptable. Otherwise, reject the run. Note that if the Δp at the final traverse point is unsuitably low, another point may be selected. If ''back purging'' at regular intervals is part of the procedure, then take comparative Δp readings, as above, for the last two back purges at which suitably high Δp readings are observed.

9.0 Quality Control

Section	Quality control measure	Effect
10.0	Sampling equipment calibration	Ensure accurate measurement of stack gas velocity head.

10.0 Calibration and Standardization

Same as Method 2, Sections 10.2 through 10.4.

11.0 Analytical Procedure

Sample collection and analysis are concurrent for this method (see Section 8.0).

12.0 Calculations and Data Analysis

Same as Method 2, Section 12.0.

13.0 Method Performance [Reserved]

14.0 Pollution Prevention [Reserved]

15.0 Waste Management [Reserved]

16.0 References

Same as Method 2, Section 16.0.

17.0 Tables, Diagrams, Flowcharts, and Validation Data

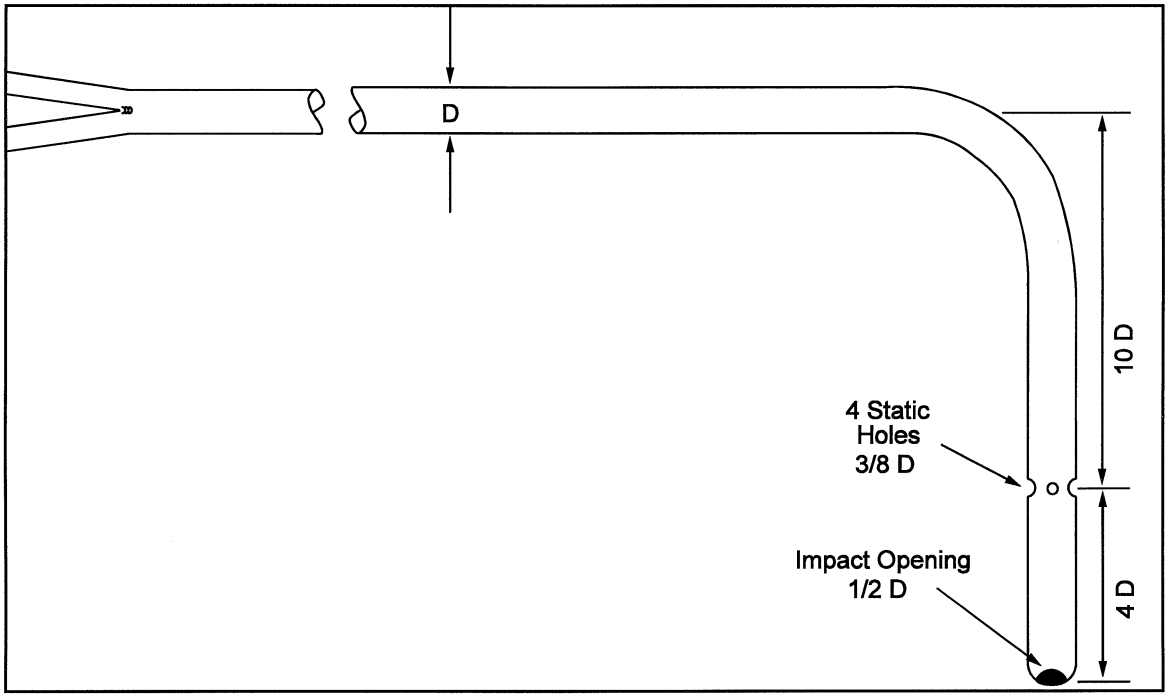

Figure 2C-1. Modified Hemispherical-Nosed Pitot Tube.

Method 2D—Measurement of Gas Volume Flow Rates in Small Pipes and Ducts

Note: This method does not include all of the specifications (*e.g.*, equipment and supplies) and procedures (e.g., sampling) essential to its performance. Some material is incorporated by reference from other methods in this part. Therefore, to obtain reliable results, persons using this method should also have a thorough knowledge of at least the following additional test methods: Method 1, Method 2, and Method 2A.

1.0 Scope and Application

1.1 This method is applicable for the determination of the volumetric flow rates of gas streams in small pipes and ducts. It can be applied to intermittent or variable gas flows only with particular caution.

1.2 Data Quality Objectives. Adherence to the requirements of this method will enhance the quality of the data obtained from air pollutant sampling methods.

2.0 Summary of Method

2.1 All the gas flow in the pipe or duct is directed through a rotameter, orifice plate or similar device to measure flow rate or pressure drop. The device has been previously calibrated in a manner that insures its proper calibration for the gas being measured. Absolute temperature and pressure measurements are made to allow correction of volumetric flow rates to standard conditions.

3.0 Definitions. [Reserved]

4.0 Interferences. [Reserved]

5.0 Safety

5.1 This method may involve hazardous materials, operations, and equipment. This test method may not address all of the safety problems associated with its use. It is the responsibility of the user of this test method to establish appropriate safety and health practices and determine the applicability of regulatory limitations prior to performing this test method.

6.0 Equipment and Supplies

Specifications for the apparatus are given below. Any other apparatus that has been demonstrated (subject to approval of the Administrator) to be capable of meeting the specifications will be considered acceptable.

6.1 Gas Metering Rate or Flow Element Device. A rotameter, orifice plate, or other volume rate or pressure drop measuring device capable of measuring the stack flow rate to within ±5 percent. The metering device shall be equipped with a temperature gauge accurate to within ±2 percent of the minimum absolute stack temperature and a pressure gauge (accurate to within ±5 mm Hg). The capacity of the metering device shall be sufficient for the expected maximum and minimum flow rates at the stack gas conditions. The magnitude and variability of stack gas flow rate, molecular weight, temperature, pressure, dewpoint, and corrosive characteristics, and pipe or duct size are factors to consider in choosing a suitable metering device.

6.2 Barometer. Same as Method 2, Section 6.5.

6.3 Stopwatch. Capable of measurement to within 1 second.

7.0 Reagents and Standards. [Reserved]

8.0 Sample Collection and Analysis

8.1 Installation and Leak Check. Same as Method 2A, Sections 8.1 and 8.2, respectively.

8.2 Volume Rate Measurement.

8.2.1 Continuous, Steady Flow. At least once an hour, record the metering device flow rate or pressure drop reading, and the metering device temperature and pressure. Make a minimum of 12 equally spaced readings of each parameter during the test period. Record the barometric pressure at the beginning and end of the test period. Record the data on a table similar to that shown in Figure 2D–1.

8.2.2 Noncontinuous and Nonsteady Flow. Use volume rate devices with particular caution. Calibration will be affected by variation in stack gas temperature, pressure and molecular

weight. Use the procedure in Section 8.2.1 with the addition of the following: Record all the metering device parameters on a time interval frequency sufficient to adequately profile each process cyclical or noncontinuous event. A multichannel continuous recorder may be used.

9.0 Quality Control

Section	Quality control measure	Effect
10.0	Sampling equipment calibration	Ensure accurate measurement of stack gas flow rate or sample volume.

10.0 Calibration and Standardization

Same as Method 2A, Section 10.0, with the following exception:

10.1 Gas Metering Device. Same as Method 2A, Section 10.1, except calibrate the metering device with the principle stack gas to be measured (examples: air, nitrogen) against a standard reference meter. A calibrated dry gas meter is an acceptable reference meter. Ideally, calibrate the metering device in the field with the actual gas to be metered. For metering devices that have a volume rate readout, calculate the test metering device calibration coefficient, Y_m, for each run shown in Equation 2D–2 Section 12.3.

10.2 For metering devices that do not have a volume rate readout, refer to the manufacturer's instructions to calculate the V_{m2} corresponding to each V_r.

10.3 Temperature Gauge. Use the procedure and specifications in Method 2A, Section 10.2. Perform the calibration at a temperature that approximates field test conditions.

10.4 Barometer. Calibrate the barometer to be used in the field test with a mercury barometer prior to the field test.

11.0 Analytical Procedure.

Sample collection and analysis are concurrent for this method (see Section 8.0).

12.0 Data Analysis and Calculations

12.1 Nomenclature.

P_{bar} = Barometric pressure, mm Hg (in. Hg).

P_m = Test meter average static pressure, mm Hg (in. Hg).

Q_r = Reference meter volume flow rate reading, m^3/min (ft^3/min).

Q_m = Test meter volume flow rate reading, m^3/min (ft^3/min).

T_r = Absolute reference meter average temperature, °K (°R).

T_m = Absolute test meter average temperature, °K (°R).

K_l = 0.3855 °K/mm Hg for metric units, = 17.65 °R/in. Hg for English units.

12.2 Gas Flow Rate.

$$Q_s = K_1 Y_m Q_m \frac{(P_{bar} + P_m)}{T_m} \qquad \text{Eq. 2D-1}$$

12.3 Test Meter Device Calibration Coefficient. Calculation for testing metering device calibration coefficient, Y_m.

$$Y_m = \frac{Q_r T_r P_{bar}}{Q_m T_m (P_{bar} + P_m)} \qquad \text{Eq. 2D-2}$$

13.0 Method Performance [Reserved]

14.0 Pollution Prevention [Reserved]

15.0 Waste Management [Reserved]

16.0 References

1. Spink, L.K. Principles and Practice of Flowmeter Engineering. The Foxboro Company. Foxboro, MA. 1967.

2. Benedict, R.P. Fundamentals of Temperature, Pressure, and Flow Measurements. John Wiley & Sons, Inc. New York, NY. 1969.

3. Orifice Metering of Natural Gas. American Gas Association. Arlington, VA. Report No. 3. March 1978. 88 pp.

17.0 Tables, Diagrams, Flowcharts, and Validation Data

Plant
Date
Run No.
Sample location
Barometric pressure (mm Hg):
Start
Finish
Operators
Metering device No.
Calibration coefficient
Calibration gas
Date to recalibrate

Time	Flow rate reading	Static Pressure [mm Hg (in. Hg)]	Temperature	
			°C (°F)	°K (°R)
Average				

Figure 2D–1. Volume Flow Rate Measurement Data

Method 2E—Determination of Landfill Gas Production Flow Rate

Note: This method does not include all of the specifications (*e.g.*, equipment and supplies) and procedures (*e.g.*, sampling and analytical) essential to its performance. Some material is incorporated by reference from other methods in this part. Therefore, to obtain reliable results, persons using this method should also have a thorough knowledge of at least the following additional test methods: Methods 2 and 3C.

1.0 Scope and Application

1.1 Applicability. This method applies to the measurement of landfill gas (LFG) production flow rate from municipal solid waste landfills and is used to calculate the flow rate of nonmethane organic compounds (NMOC) from landfills.

1.2 Data Quality Objectives. Adherence to the requirements of this method will enhance the quality of the data obtained from air pollutant sampling methods.

2.0 Summary of Method

2.1 Extraction wells are installed either in a cluster of three or at five dispersed locations in the landfill. A blower is used to extract LFG from the landfill. LFG composition, landfill pressures, and orifice pressure differentials from the wells are measured and the landfill gas production flow rate is calculated.

3.0 Definitions [Reserved]

4.0 Interferences [Reserved]

5.0 Safety

5.1 Since this method is complex, only experienced personnel should perform the test. Landfill gas contains methane, therefore explosive mixtures may exist at or near the landfill. It is advisable to take appropriate safety precautions when testing landfills, such as refraining from smoking and installing explosion-proof equipment.

6.0 Equipment and Supplies

6.1 Well Drilling Rig. Capable of boring a 0.61 m (24 in.) diameter hole into the landfill to a minimum of 75 percent of the landfill depth. The depth of the well shall not extend to the bottom of the landfill or the liquid level.

6.2 Gravel. No fines. Gravel diameter should be appreciably larger than perforations stated in Sections 6.10 and 8.2.

6.3 Bentonite.

6.4 Backfill Material. Clay, soil, and sandy loam have been found to be acceptable.

6.5 Extraction Well Pipe. Minimum diameter of 3 in., constructed of polyvinyl chloride (PVC), high density polyethylene (HDPE), fiberglass, stainless steel, or other suitable nonporous material capable of transporting landfill gas.

6.6 Above Ground Well Assembly. Valve capable of adjusting gas flow, such as a gate, ball, or butterfly valve; sampling ports at the well head and outlet; and a flow measuring device, such as an in-line orifice meter or pitot tube. A schematic of the aboveground well head assembly is shown in Figure 2E–1.

6.7 Cap. Constructed of PVC or HDPE.

6.8 Header Piping. Constructed of PVC or HDPE.

6.9 Auger. Capable of boring a 0.15- to 0.23-m (6-to 9-in.) diameter hole to a depth equal to the top of the perforated section of the extraction well, for pressure probe installation.

6.10 Pressure Probe. Constructed of PVC or stainless steel (316), 0.025-m (1-in.). Schedule 40 pipe. Perforate the bottom two-thirds. A minimum requirement for perforations is slots or holes with an open area equivalent to four 0.006-m (¼-in.) diameter holes spaced 90° apart every 0.15 m (6 in.).

6.11 Blower and Flare Assembly. Explosion-proof blower, capable of extracting LFG at a flow rate of 8.5 m^3/min (300 ft^3/min), a water knockout, and flare or incinerator.

6.12 Standard Pitot Tube and Differential Pressure Gauge for Flow Rate Calibration with Standard Pitot. Same as Method 2, Sections 6.7 and 6.8.

6.13 Orifice Meter. Orifice plate, pressure tabs, and pressure measuring device to measure the LFG flow rate.

6.14 Barometer. Same as Method 4, Section 6.1.5.

6.15 Differential Pressure Gauge. Water-filled U-tube manometer or equivalent, capable of measuring within 0.02 mm Hg (0.01 in. H_2O), for measuring the pressure of the pressure probes.

7.0 Reagents and Standards. Not Applicable

8.0 Sample Collection, Preservation, Storage, and Transport

8.1 Placement of Extraction Wells. The landfill owner or operator may install a single cluster of three extraction wells in a test area or space five equal-volume wells over the landfill. The cluster wells are recommended but may be used only if the composition, age of the refuse, and the landfill depth of the test area can be determined.

8.1.1 Cluster Wells. Consult landfill site records for the age of the refuse, depth, and composition of various sections of the landfill. Select an area near the perimeter of the landfill with a depth equal to or greater than the average depth of the landfill and with the average age of the refuse between 2 and 10 years old. Avoid areas known to contain nondecomposable materials, such as concrete and asbestos. Locate the cluster wells as shown in Figure 2E–2.

8.1.1.1 The age of the refuse in a test area will not be uniform, so calculate a weighted average age of the refuse as shown in Section 12.2.

8.1.2 Equal Volume Wells. Divide the sections of the landfill that are at least 2 years old into five areas representing equal volumes. Locate an extraction well near the center of each area.

8.2 Installation of Extraction Wells. Use a well drilling rig to dig a 0.6 m (24 in.) diameter hole in the landfill to a minimum of 75 percent of the landfill depth, not to extend to the bottom of the landfill or the liquid level. Perforate the bottom two thirds of the extraction well pipe. A minimum requirement for perforations is holes or slots with an open area equivalent to 0.01-m (0.5-in.) diameter holes spaced 90° apart every 0.1 to 0.2 m (4 to 8 in.). Place the extraction well in the center of the hole and backfill with gravel to a level 0.30 m (1 ft) above the perforated section. Add a layer of backfill material 1.2 m (4 ft) thick. Add a layer of bentonite 0.9 m (3 ft) thick, and backfill the remainder of the hole with cover material or material equal in permeability to the existing cover material. The specifications for extraction well installation are shown in Figure 2E–3.

8.3 Pressure Probes. Shallow pressure probes are used in the check for infiltration of air into the landfill, and deep pressure probes are use to determine the radius of influence. Locate pressure probes along three radial arms approximately 120° apart at distances of 3, 15, 30, and 45 m (10, 50, 100, and 150 ft) from the extraction well. The tester has the option of locating additional pressure probes at distances every 15 m (50 feet) beyond 45 m (150 ft). Example placements of probes are shown in Figure 2E–4. The 15-, 30-, and 45-m, (50-, 100-, and 150-ft) probes from each well, and any additional probes located along the three radial arms (deep probes), shall

extend to a depth equal to the top of the perforated section of the extraction wells. All other probes (shallow probes) shall extend to a depth equal to half the depth of the deep probes.

8.3.1 Use an auger to dig a hole, 0.15- to 0.23-m (6-to 9-in.) in diameter, for each pressure probe. Perforate the bottom two thirds of the pressure probe. A minimum requirement for perforations is holes or slots with an open area equivalent to four 0.006-m (0.25-in.) diameter holes spaced 90° apart every 0.15 m (6 in.). Place the pressure probe in the center of the hole and backfill with gravel to a level 0.30 m (1 ft) above the perforated section. Add a layer of backfill material at least 1.2 m (4 ft) thick. Add a layer of bentonite at least 0.3 m (1 ft) thick, and backfill the remainder of the hole with cover material or material equal in permeability to the existing cover material. The specifications for pressure probe installation are shown in Figure 2E–5.

8.4 LFG Flow Rate Measurement. Place the flow measurement device, such as an orifice meter, as shown in Figure 2E–1. Attach the wells to the blower and flare assembly. The individual wells may be ducted to a common header so that a single blower, flare assembly, and flow meter may be used. Use the procedures in Section 10.1 to calibrate the flow meter.

8.5 Leak-Check. A leak-check of the above ground system is required for accurate flow rate measurements and for safety. Sample LFG at the well head sample port and at the outlet sample port. Use Method 3C to determine nitrogen (N_2) concentrations. Determine the difference between the well head and outlet N_2 concentrations using the formula in Section 12.3. The system passes the leak-check if the difference is less than 10,000 ppmv.

8.6 Static Testing. Close the control valves on the well heads during static testing. Measure the gauge pressure (P_g) at each deep pressure probe and the barometric pressure (P_{bar}) every 8 hours (hr) for 3 days. Convert the gauge pressure of each deep pressure probe to absolute pressure using the equation in Section 12.4. Record as P_i (initial absolute pressure).

8.6.1 For each probe, average all of the 8-hr deep pressure probe readings (P_i) and record as P_{ia} (average absolute pressure). P_{ia} is used in Section 8.7.5 to determine the maximum radius of influence.

8.6.2 Measure the static flow rate of each well once during static testing.

8.7 Short-Term Testing. The purpose of short-term testing is to determine the maximum vacuum that can be applied to the wells without infiltration of ambient air into the landfill. The short-term testing is performed on one well at a time. Burn all LFG with a flare or incinerator.

8.7.1 Use the blower to extract LFG from a single well at a rate at least twice the static flow rate of the respective well measured in Section 8.6.2. If using a single blower and flare assembly and a common header system, close the control valve on the wells not being measured. Allow 24 hr for the system to stabilize at this flow rate.

8.7.2 Test for infiltration of air into the landfill by measuring the gauge pressures of the shallow pressure probes and using Method 3C to determine the LFG N_2 concentration. If the LFG N_2 concentration is less than 5 percent and all of the shallow probes have a positive gauge pressure, increase the blower vacuum by 3.7 mm Hg (2 in. H_2O), wait 24 hr, and repeat the tests for infiltration. Continue the above steps of increasing blower vacuum by 3.7 mm Hg (2 in. H_2O), waiting 24 hr, and testing for infiltration until the concentration of N_2 exceeds 5 percent or any of the shallow probes have a negative gauge pressure. When this occurs,reduce the blower vacuum to the maximum setting at which the N_2 concentration was less than 5 percent and the gauge pressures of the shallow probes are positive.

8.7.3 At this blower vacuum, measure atmospheric pressure (P_{bar}) every 8 hr for 24 hr, and record the LFG flow rate (Q_s) and the probe gauge pressures (P_f) for all of the probes. Convert the gauge pressures of the deep probes to absolute pressures for each 8-hr reading at Q_s as shown in Section 12.4.

8.7.4 For each probe, average the 8-hr deep pressure probe absolute pressure readings and record as P_{fa} (the final average absolute pressure).

8.7.5 For each probe, compare the initial average pressure (P_{ia}) from Section 8.6.1 to the final average pressure (P_{fa}). Determine the furthermost point from the well head along each radial arm where $P_{fa} \leq P_{ia}$. This distance is the maximum radius of influence (R_m), which is the distance from the well affected by the vacuum. Average these values to determine the average maximum radius of influence (R_{ma}).

8.7.6 Calculate the depth (D_{st}) affected by the extraction well during the short term test as shown in Section 12.6. If the computed value of D_{st} exceeds the depth of the landfill, set D_{st} equal to the landfill depth.

8.7.7 Calculate the void volume (V) for the extraction well as shown in Section 12.7.

8.7.8 Repeat the procedures in Section 8.7 for each well.

8.8 Calculate the total void volume of the test wells (V_v) by summing the void volumes (V) of each well.

8.9 Long-Term Testing. The purpose of long-term testing is to extract two void volumes of LFG from the extraction wells. Use the blower to extract LFG from the wells. If a single Blower and flare assembly and common header system are used, open all control valves and set the blower vacuum equal to the highest stabilized blower vacuum demonstrated by any individual well in Section 8.7. Every 8 hr, sample the LFG from the well head sample port, measure the gauge pressures of the shallow pressure probes, the blower vacuum, the LFG flow rate, and use the criteria for infiltration in Section 8.7.2 and Method 3C to test for infiltration. If infiltration is detected, do not reduce the blower vacuum, instead reduce the LFG flow rate from the well by adjusting the control valve on the well head. Adjust each affected well individually. Continue until the equivalent of two total void volumes (V_v) have been extracted, or until $V_t = 2V_v$.

8.9.1 Calculate V_t, the total volume of LFG extracted from the wells, as shown in Section 12.8.

8.9.2 Record the final stabilized flow rate as Q_f and the gauge pressure for each deep probe. If, during the long term testing, the flow rate does not stabilize, calculate Q_f by averaging the last 10 recorded flow rates.

8.9.3 For each deep probe, convert each gauge pressure to absolute pressure as in Section 12.4. Average these values and record as P_{sa}. For each probe, compare P_{ia} to P_{sa}. Determine the furthermost point from the well head along each radial arm where $P_{sa} \leq P_{ia}$. This distance is the stabilized radius of influence. Average these values to determine the average stabilized radius of influence (R_{sa}).

8.10 Determine the NMOC mass emission rate using the procedures in Section 12.9 through 12.15.

9.0 Quality Control

9.1 Miscellaneous Quality Control Measures.

Section	Quality control measure	Effect
10.1	LFG flow rate meter calibration	Ensures accurate measurement of LFG flow rate and sample volume

10.0 Calibration and Standardization

10.1 LFG Flow Rate Meter (Orifice) Calibration Procedure. Locate a standard pitot tube in line with an orifice meter. Use the procedures in Section 8, 12.5, 12.6, and 12.7 of Method 2 to determine the average dry gas volumetric flow rate for at least five flow rates that bracket the expected LFG flow rates, except in Section 8.1, use a standard pitot tube rather than a Type S pitot tube. Method 3C may be used to determine the dry molecular weight. It may be necessary to calibrate more than one orifice meter in order to bracket the LFG flow rates. Construct a calibration curve by plotting the pressure drops across the orifice meter for each flow rate versus the average dry gas volumetric flow rate in m^3/min of the gas.

11.0 Procedures [Reserved]

12.0 Data Analysis and Calculations

12.1 Nomenclature.

A = Age of landfill, yr.
A_{avg} = Average age of the refuse tested, yr.
A_i = Age of refuse in the ith fraction, yr.
A_r = Acceptance rate, Mg/yr.
C_{NMOC} = NMOC concentration, ppmv as hexane ($C_{NMOC} = C_t/6$).
C_o = Concentration of N_2 at the outlet, ppmv.
C_t = NMOC concentration, ppmv (carbon equivalent) from Method 25C.
C_w = Concentration of N_2 at the wellhead, ppmv.
D = Depth affected by the test wells, m.
D_{st} = Depth affected by the test wells in the short-term test, m.
e = Base number for natural logarithms (2.718).
f = Fraction of decomposable refuse in the landfill.
f_i = Fraction of the refuse in the ith section.
k = Landfill gas generation constant, yr^{-1}.
L_o = Methane generation potential, m^3/Mg.
L_o' = Revised methane generation potential to account for the amount of nondecomposable material in the landfill, m^3/Mg.
M_i = Mass of refuse in the ith section, Mg.
M_r = Mass of decomposable refuse affected by the test well, Mg.
P_{bar} = Atmospheric pressure, mm Hg.
P_f = Final absolute pressure of the deep pressure probes during short-term testing, mm Hg.
P_{fa} = Average final absolute pressure of the deep pressure probes during short-term testing, mm Hg.
P_{gf} = final gauge pressure of the deep pressure probes, mm Hg.
P_{gi} = Initial gauge pressure of the deep pressure probes, mm Hg.
P_i = Initial absolute pressure of the deep pressure probes during static testing, mm Hg.
P_{ia} = Average initial absolute pressure of the deep pressure probes during static testing, mm Hg.
P_s = Final absolute pressure of the deep pressure probes during long-term testing, mm Hg.
P_{sa} = Average final absolute pressure of the deep pressure probes during long-term testing, mm Hg.
Q_f = Final stabilized flow rate, m^3/min.
Q_i = LFG flow rate measured at orifice meter during the ith interval, m^3/min.
Q_s = Maximum LFG flow rate at each well determined by short-term test, m^3/min.
Q_t = NMOC mass emission rate, m^3/min.
R_m = Maximum radius of influence, m.
R_{ma} = Average maximum radius of influence, m.
R_s = Stabilized radius of influence for an individual well, m.
R_{sa} = Average stabilized radius of influence, m.
t_i = Age of section i, yr.
t_t = Total time of long-term testing, yr.
t_{vi} = Time of the ith interval (usually 8), hr.
V = Void volume of test well, m^3.
V_r = Volume of refuse affected by the test well, m^3.
V_t = Total volume of refuse affected by the long-term testing, m^3.
V_v = Total void volume affected by test wells, m^3.
WD = Well depth, m.
ρ = Refuse density, Mg/m^3 (Assume 0.64 Mg/m^3 if data are unavailable).

12.2 Use the following equation to calculate a weighted average age of landfill refuse.

$$A_{avg} = \sum_{i=1}^{n} f_i A_i \qquad \text{Eq. 2E-1}$$

12.3 Use the following equation to determine the difference in N_2 concentrations (ppmv) at the well head and outlet location.

$$\text{Difference} = C_o - C_w \qquad \text{Eq. 2E-2}$$

12.4 Use the following equation to convert the gauge pressure (P_g) of each initial deep pressure probe to absolute pressure (P_i).

$$P_i = P_{bar} + P_{gi} \qquad \text{Eq. 2E-3}$$

12.5 Use the following equation to convert the gauge pressures of the deep probes to absolute pressures for each 8-hr reading at Q_s.

$$P_f = P_{bar} + P_{gf} \qquad \text{Eq. 2E-4}$$

12.6 Use the following equation to calculate the depth (D_{st}) affected by the extraction well during the short-term test.

$$D_{st} = WD + R_{ma} \qquad \text{Eq. 2E-5}$$

12.7 Use the following equation to calculate the void volume for the extraction well (V).

$$V = 0.40\,\Pi\,R_{ma}^{\,2}\,D_{st} \qquad \text{Eq. 2E-6}$$

12.8 Use the following equation to calculate V_t, the total volume of LFG extracted from the wells.

$$V_t = \sum_{i=1}^{n} 60\,Q_i t_{vi} \qquad \text{Eq. 2E-7}$$

12.9 Use the following equation to calculate the depth affected by the test well. If using cluster wells, use the average depth of the wells for WD. If the value of D is greater than the depth of the landfill, set D equal to the landfill depth.

$$D = WD + R_{sa} \qquad \text{Eq. 2E-8}$$

12.10 Use the following equation to calculate the volume of refuse affected by the test well.

$$V_r = R_{sa}^{\,2}\,\Pi\,D \qquad \text{Eq. 2E-9}$$

12.11 Use the following equation to calculate the mass affected by the test well.

$$M_r = V_r\,\rho \qquad \text{Eq. 2E-10}$$

12.12 Modify L_o to account for the nondecomposable refuse in the landfill.

$$L_o' = f\,L_o \qquad \text{Eq. 2E-11}$$

12.13 In the following equation, solve for k (landfill gas generation constant) by iteration. A suggested procedure is to select a value for k, calculate the left side of the equation, and if not equal to zero, select another value for k. Continue this process until the left hand side of the equation equals zero, ±0.001.

$$k_e^{-k} A_{avg} - \frac{Q_f}{2\,L_o' M_r} = 0 \qquad \text{Eq. 2E-12}$$

12.14 Use the following equation to determine landfill NMOC mass emission rate if the yearly acceptance rate of refuse has been consistent (10 percent) over the life of the landfill.

$$Q_t = 2\,L_o' A_r \left(1 - e^{-kA}\right) C_{NMOC} \left(3.595 \times 10^{-9}\right) \qquad \text{Eq. 2E-13}$$

12.15 Use the following equation to determine landfill NMOC mass emission rate if the acceptance rate has not been consistent over the life of the landfill.

$$Q_t = 2\,k\,L_o' C_{NMOC} \left(3.595 \times 10^{-9}\right) \sum_{i=1}^{n} M_i e^{-kt_i} \qquad \text{Eq. 2E-14}$$

13.0 Method Performance. [Reserved]

14.0 Pollution Prevention. [Reserved]

15.0 Waste Management. [Reserved]

16.0 References

1. Same as Method 2, Appendix A, 40 CFR Part 60.

2. Emcon Associates, Methane Generation and Recovery from Landfills. Ann Arbor Science, 1982.

3. The Johns Hopkins University, Brown Station Road Landfill Gas Resource Assessment, Volume 1: Field Testing and Gas Recovery Projections. Laurel, Maryland: October 1982.

4. Mandeville and Associates, Procedure Manual for Landfill Gases Emission Testing.

5. Letter and attachments from Briggum, S., Waste Management of North America, to Thorneloe, S., EPA. Response to July 28, 1988 request for additional information. August 18, 1988.

6. Letter and attachments from Briggum, S., Waste Management of North America, to Wyatt, S., EPA. Response to December 7, 1988 request for additional information. January 16, 1989.

BILLING CODE 6560–50–C

17.0 Tables, Diagrams, Flowcharts, and Validation Data

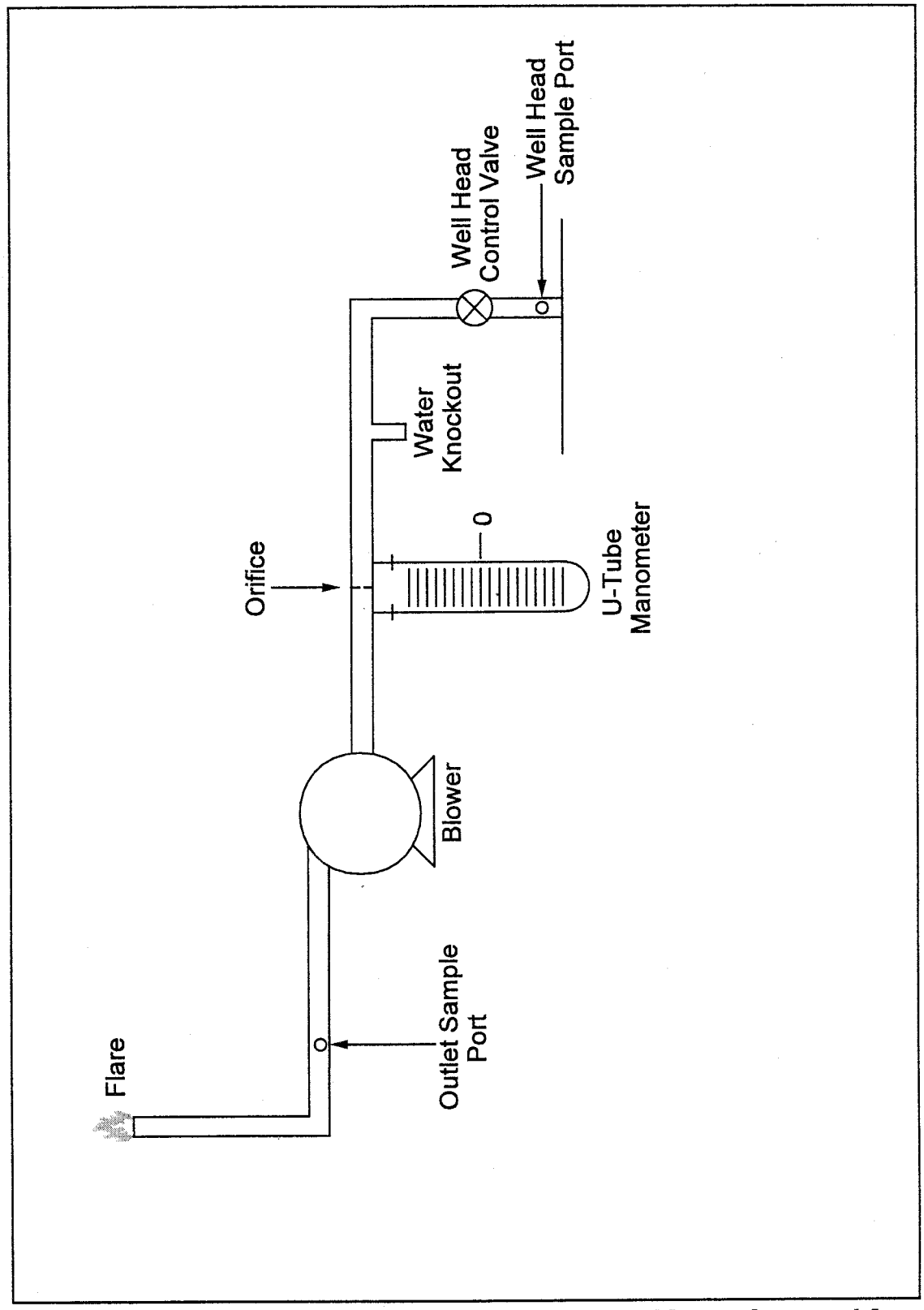

Figure 2E-1. Schematic of Aboveground Well Head Assembly.

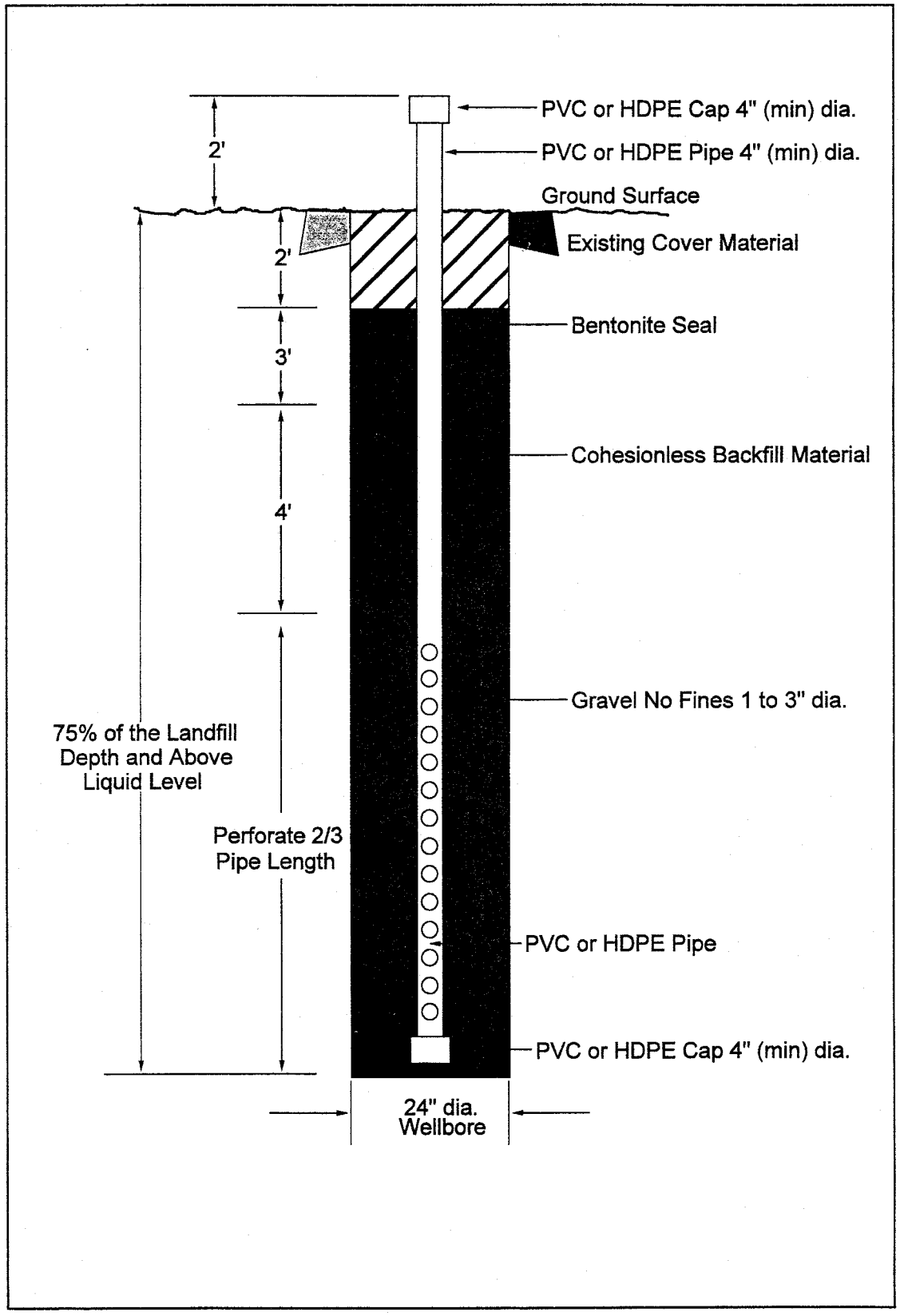

Figure 2E-3. Gas Extraction Well.

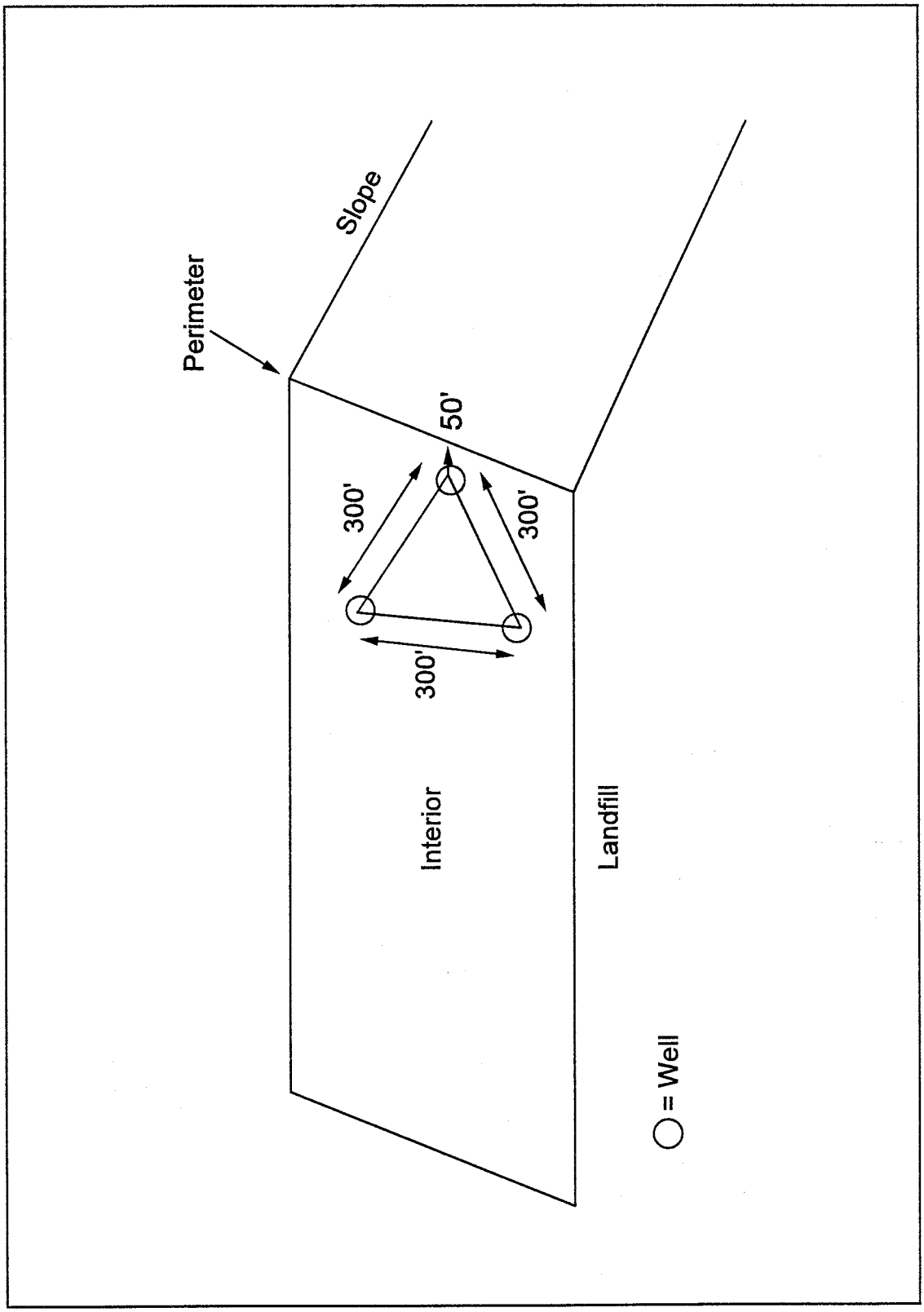

Figure 2E-2. Cluster Well Placement.

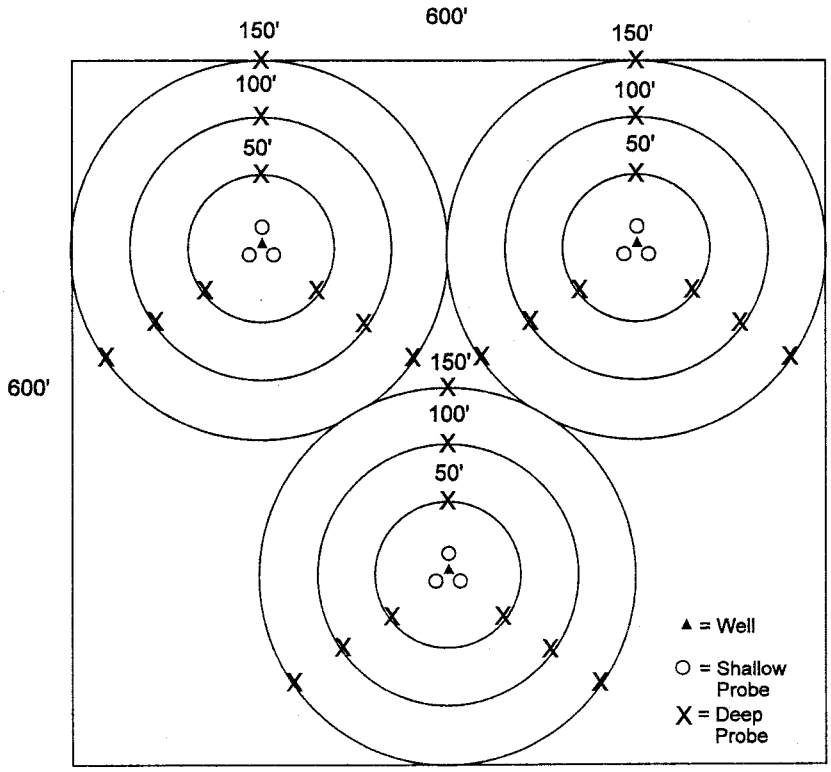

Figure 2E-4. Cluster Well Configuration.

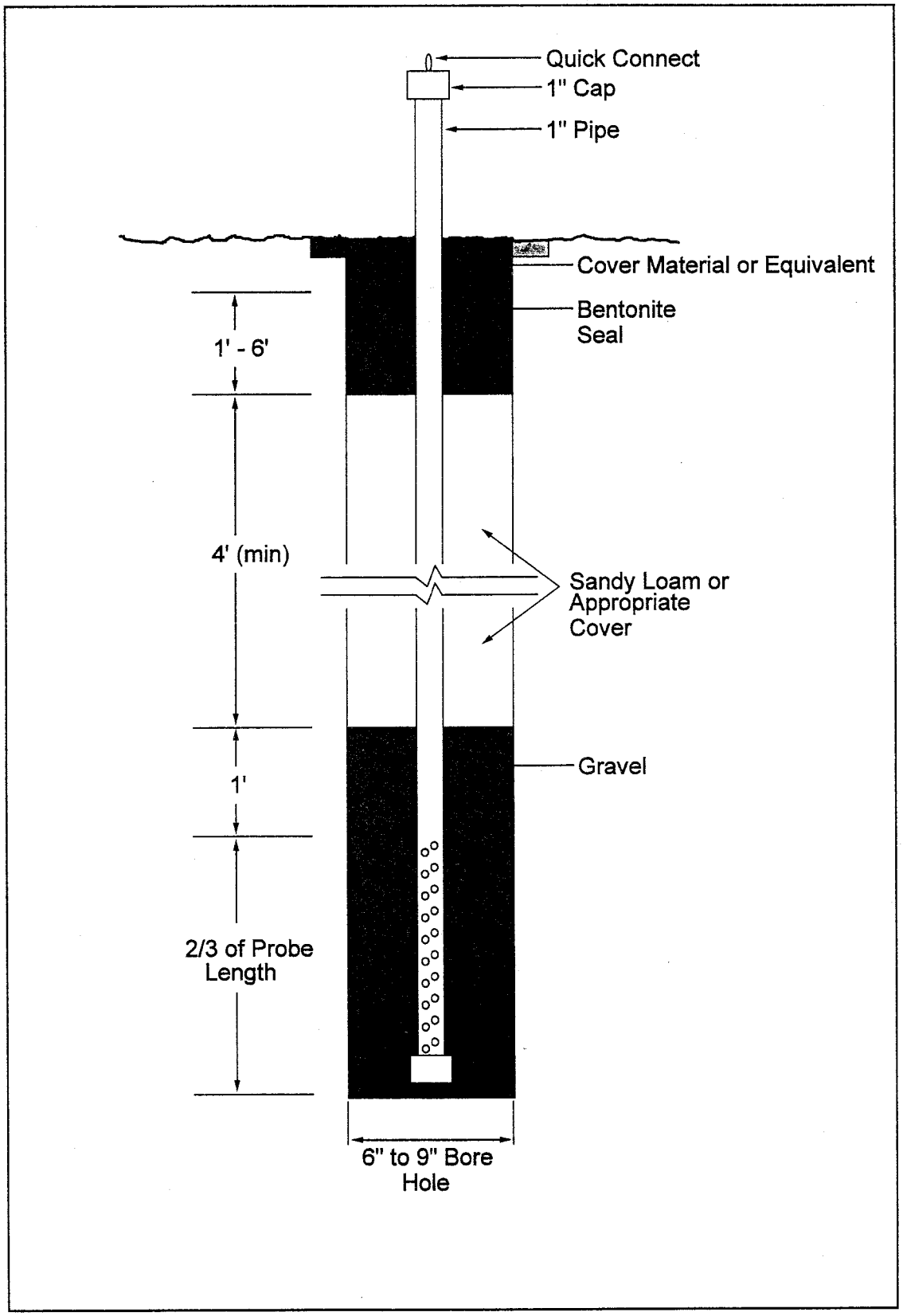

Figure 2E-5. Pressure Probe.

BILLING CODE 6560–50–C

* * * * *

Method 3—Gas Analysis for the Determination of Dry Molecular Weight

Note: This method does not include all of the specifications (*e.g.,* equipment and supplies) and procedures (*e.g.,* sampling) essential to its performance. Some material is incorporated by reference from other methods in this part. Therefore, to obtain reliable results, persons using this method should also have a thorough knowledge of Method 1.

1.0 Scope and Application

1.1 Analytes.

Analytes	CAS No.	Sensitivity
Oxygen (O_2)	7782–44–7	2,000 ppmv.
Nitrogen (N_2)	7727–37–9	N/A.
Carbon dioxide (CO_2)	124–38–9	2,000 ppmv.
Carbon monoxide (CO)	630–08–0	N/A.

1.2 Applicability. This method is applicable for the determination of CO_2 and O_2 concentrations and dry molecular weight of a sample from an effluent gas stream of a fossil-fuel combustion process or other process.

1.3 Other methods, as well as modifications to the procedure described herein, are also applicable for all of the above determinations. Examples of specific methods and modifications include: (1) A multi-point grab sampling method using an Orsat analyzer to analyze the individual grab sample obtained at each point; (2) a method for measuring either CO_2 or O_2 and using stoichiometric calculations to determine dry molecular weight; and (3) assigning a value of 30.0 for dry molecular weight, in lieu of actual measurements, for processes burning natural gas, coal, or oil. These methods and modifications may be used, but are subject to the approval of the Administrator. The method may also be applicable to other processes where it has been determined that compounds other than CO_2, O_2, carbon monoxide (CO), and nitrogen (N_2) are not present in concentrations sufficient to affect the results.

1.4 Data Quality Objectives. Adherence to the requirements of this method will enhance the quality of the data obtained from air pollutant sampling methods.

2.0 Summary of Method

2.1 A gas sample is extracted from a stack by one of the following methods: (1) single-point, grab sampling; (2) single-point, integrated sampling; or (3) multi-point, integrated sampling. The gas sample is analyzed for percent CO_2 and percent O_2. For dry molecular weight determination, either an Orsat or a Fyrite analyzer may be used for the analysis.

3.0 Definitions [Reserved]

4.0 Interferences

4.1 Several compounds can interfere, to varying degrees, with the results of Orsat or Fyrite analyses. Compounds that interfere with CO_2 concentration measurement include acid gases (*e.g.,* sulfur dioxide, hydrogen chloride); compounds that interfere with O_2 concentration measurement include unsaturated hydrocarbons (*e.g.,* acetone, acetylene), nitrous oxide, and ammonia. Ammonia reacts chemically with the O_2 absorbing solution, and when present in the effluent gas stream must be removed before analysis.

5.0 Safety

5.1 Disclaimer. This method may involve hazardous materials, operations, and equipment. This test method may not address all of the safety problems associated with its use. It is the responsibility of the user of this test method to establish appropriate safety and health practices and determine the applicability of regulatory limitations prior to performing this test method.

5.2 Corrosive Reagents.

5.2.1 A typical Orsat analyzer requires four reagents: a gas-confining solution, CO_2 absorbent, O_2 absorbent, and CO absorbent. These reagents may contain potassium hydroxide, sodium hydroxide, cuprous chloride, cuprous sulfate, alkaline pyrogallic acid, and/or chromous chloride. Follow manufacturer's operating instructions and observe all warning labels for reagent use.

5.2.2 A typical Fyrite analyzer contains zinc chloride, hydrochloric acid, and either potassium hydroxide or chromous chloride. Follow manufacturer's operating instructions and observe all warning labels for reagent use.

6.0 Equipment and Supplies

Note: As an alternative to the sampling apparatus and systems described herein, other sampling systems (*e.g.,* liquid displacement) may be used, provided such systems are capable of obtaining a representative sample and maintaining a constant sampling rate, and are, otherwise, capable of yielding acceptable results. Use of such systems is subject to the approval of the Administrator.

6.1 Grab Sampling (See Figure 3–1).

6.1.1 Probe. Stainless steel or borosilicate glass tubing equipped with an in-stack or out-of-stack filter to remove particulate matter (a plug of glass wool is satisfactory for this purpose). Any other materials, resistant to temperature at sampling conditions and inert to all components of the gas stream, may be used for the probe. Examples of such materials may include aluminum, copper, quartz glass, and Teflon.

6.1.2 Pump. A one-way squeeze bulb, or equivalent, to transport the gas sample to the analyzer.

6.2 Integrated Sampling (Figure 3–2).

6.2.1 Probe. Same as in Section 6.1.1.

6.2.2 Condenser. An air-cooled or water-cooled condenser, or other condenser no greater than 250 ml that will not remove O_2, CO_2, CO, and N_2, to remove excess moisture which would interfere with the operation of the pump and flowmeter.

6.2.3 Valve. A needle valve, to adjust sample gas flow rate.

6.2.4 Pump. A leak-free, diaphragm-type pump, or equivalent, to transport sample gas to the flexible bag. Install a small surge tank between the pump and rate meter to eliminate the pulsation effect of the diaphragm pump on the rate meter.

6.2.5 Rate Meter. A rotameter, or equivalent, capable of measuring flow rate to ± 2 percent of the selected flow rate. A flow rate range of 500 to 1000 ml/min is suggested.

6.2.6 Flexible Bag. Any leak-free plastic (*e.g.,* Tedlar, Mylar, Teflon) or plastic-coated aluminum (*e.g.,* aluminized Mylar) bag, or equivalent, having a capacity consistent with the selected flow rate and duration of the test run. A capacity in the range of 55 to 90 liters (1.9 to 3.2 ft^3) is suggested. To leak-check the bag, connect it to a water manometer, and pressurize the bag to 5 to 10 cm H_2O (2 to 4 in. H_2O). Allow to stand for 10 minutes. Any displacement in the water manometer indicates a leak. An alternative leak-check method is to pressurize the bag to

5 to 10 cm (2 to 4 in.) H_2O and allow to stand overnight. A deflated bag indicates a leak.

6.2.7 Pressure Gauge. A water-filled U-tube manometer, or equivalent, of about 30 cm (12 in.), for the flexible bag leak-check.

6.2.8 Vacuum Gauge. A mercury manometer, or equivalent, of at least 760 mm (30 in.) Hg, for the sampling train leak-check.

6.3 Analysis. An Orsat or Fyrite type combustion gas analyzer.

7.0 Reagents and Standards

7.1 Reagents. As specified by the Orsat or Fyrite-type combustion analyzer manufacturer.

7.2 Standards. Two standard gas mixtures, traceable to National Institute of Standards and Technology (NIST) standards, to be used in auditing the accuracy of the analyzer and the analyzer operator technique:

7.2.1. Gas cylinder containing 2 to 4 percent O_2 and 14 to 18 percent CO_2.

7.2.2. Gas cylinder containing 2 to 4 percent CO_2 and about 15 percent O_2.

8.0 Sample Collection, Preservation, Storage, and Transport

8.1 Single Point, Grab Sampling Procedure.

8.1.1 The sampling point in the duct shall either be at the centroid of the cross section or at a point no closer to the walls than 1.0 m (3.3 ft), unless otherwise specified by the Administrator.

8.1.2 Set up the equipment as shown in Figure 3–1, making sure all connections ahead of the analyzer are tight. If an Orsat analyzer is used, it is recommended that the analyzer be leak-checked by following the procedure in Section 11.5; however, the leak-check is optional.

8.1.3 Place the probe in the stack, with the tip of the probe positioned at the sampling point. Purge the sampling line long enough to allow at least five exchanges. Draw a sample into the analyzer, and immediately analyze it for percent CO_2 and percent O_2 according to Section 11.2.

8.2 Single-Point, Integrated Sampling Procedure.

8.2.1 The sampling point in the duct shall be located as specified in Section 8.1.1.

8.2.2 Leak-check (optional) the flexible bag as in Section 6.2.6. Set up the equipment as shown in Figure 3–2. Just before sampling, leak-check (optional) the train by placing a vacuum gauge at the condenser inlet, pulling a vacuum of at least 250 mm Hg (10 in. Hg), plugging the outlet at the quick disconnect, and then turning off the pump. The vacuum should remain stable for at least 0.5 minute. Evacuate the flexible bag. Connect the probe, and place it in the stack, with the tip of the probe positioned at the sampling point. Purge the sampling line. Next, connect the bag, and make sure that all connections are tight.

8.2.3 Sample Collection. Sample at a constant rate (±10 percent). The sampling run should be simultaneous with, and for the same total length of time as, the pollutant emission rate determination. Collection of at least 28 liters (1.0 ft^3) of sample gas is recommended; however, smaller volumes may be collected, if desired.

8.2.4 Obtain one integrated flue gas sample during each pollutant emission rate determination. Within 8 hours after the sample is taken, analyze it for percent CO_2 and percent O_2 using either an Orsat analyzer or a Fyrite type combustion gas analyzer according to Section 11.3.

Note: When using an Orsat analyzer, periodic Fyrite readings may be taken to verify/confirm the results obtained from the Orsat.

8.3 Multi-Point, Integrated Sampling Procedure.

8.3.1 Unless otherwise specified in an applicable regulation, or by the Administrator, a minimum of eight traverse points shall be used for circular stacks having diameters less than 0.61 m (24 in.), a minimum of nine shall be used for rectangular stacks having equivalent diameters less than 0.61 m (24 in.), and a minimum of 12 traverse points shall be used for all other cases. The traverse points shall be located according to Method 1.

8.3.2 Follow the procedures outlined in Sections 8.2.2 through 8.2.4, except for the following: Traverse all sampling points, and sample at each point for an equal length of time. Record sampling data as shown in Figure 3–3.

9.0 Quality Control

Section	Quality control measure	Effect
8.2	Use of Fyrite to confirm Orsat results	Ensures the accurate measurement of CO_2 and O_2.
10.1	Periodic audit of analyzer and operator technique.	Ensures that the analyzer is operating properly and that the operator performs the sampling procedure correctly and accurately.
11.3	Replicable analyses of integrated samples	Minimizes experimental error.

10.0 Calibration and Standardization

10.1 Analyzer. The analyzer and analyzer operator's technique should be audited periodically as follows: take a sample from a manifold containing a known mixture of CO_2 and O_2, and analyze according to the procedure in Section 11.3. Repeat this procedure until the measured concentration of three consecutive samples agrees with the stated value ± 0.5 percent. If necessary, take corrective action, as specified in the analyzer users manual.

10.2 Rotameter. The rotameter need not be calibrated, but should be cleaned and maintained according to the manufacturer's instruction.

11.0 Analytical Procedure

11.1 Maintenance. The Orsat or Fyrite-type analyzer should be maintained and operated according to the manufacturers specifications.

11.2 Grab Sample Analysis. Use either an Orsat analyzer or a Fyrite-type combustion gas analyzer to measure O_2 and CO_2 concentration for dry molecular weight determination, using procedures as specified in the analyzer user's manual. If an Orsat analyzer is used, it is recommended that the Orsat leak-check, described in Section 11.5, be performed before this determination; however, the check is optional. Calculate the dry molecular weight as indicated in Section 12.0. Repeat the sampling, analysis, and calculation procedures until the dry molecular weights of any three grab samples differ from their mean by no more than 0.3 g/g-mole (0.3 lb/lb-mole). Average these three molecular weights, and report the results to the nearest 0.1 g/g-mole (0.1 lb/lb-mole).

11.3 Integrated Sample Analysis. Use either an Orsat analyzer or a Fyrite-type combustion gas analyzer to measure O_2 and CO_2 concentration for dry molecular weight determination, using procedures as specified in the analyzer user's manual. If an Orsat analyzer is used, it is recommended that the Orsat leak-check, described in Section 11.5, be performed before this determination; however, the check is

optional. Calculate the dry molecular weight as indicated in Section 12.0. Repeat the analysis and calculation procedures until the individual dry molecular weights for any three analyses differ from their mean by no more than 0.3 g/g-mole (0.3 lb/lb-mole). Average these three molecular weights, and report the results to the nearest 0.1 g/g-mole (0.1 lb/lb-mole).

11.4 Standardization. A periodic check of the reagents and of operator technique should be conducted at least once every three series of test runs as outlined in Section 10.1.

11.5 Leak-Check Procedure for Orsat Analyzer. Moving an Orsat analyzer frequently causes it to leak. Therefore, an Orsat analyzer should be thoroughly leak-checked on site before the flue gas sample is introduced into it. The procedure for leak-checking an Orsat analyzer is as follows:

11.5.1 Bring the liquid level in each pipette up to the reference mark on the capillary tubing, and then close the pipette stopcock.

11.5.2 Raise the leveling bulb sufficiently to bring the confining liquid meniscus onto the graduated portion of the burette, and then close the manifold stopcock.

11.5.3 Record the meniscus position.

11.5.4 Observe the meniscus in the burette and the liquid level in the pipette for movement over the next 4 minutes.

11.5.5 For the Orsat analyzer to pass the leak-check, two conditions must be met:

11.5.5.1 The liquid level in each pipette must not fall below the bottom of the capillary tubing during this 4-minute interval.

11.5.5.2 The meniscus in the burette must not change by more than 0.2 ml during this 4-minute interval.

11.5.6 If the analyzer fails the leak-check procedure, check all rubber connections and stopcocks to determine whether they might be the cause of the leak. Disassemble, clean, and regrease any leaking stopcocks. Replace leaking rubber connections. After the analyzer is reassembled, repeat the leak-check procedure.

12.0 Calculations and Data Analysis

12.1 Nomenclature.

M_d = Dry molecular weight, g/g-mole (lb/lb-mole).

$\%CO_2$ = Percent CO_2 by volume, dry basis.

$\%O_2$ = Percent O_2 by volume, dry basis.

%CO = Percent CO by volume, dry basis.

$\%N_2$ = Percent N_2 by volume, dry basis.

0.280 = Molecular weight of N_2 or CO, divided by 100.

0.320 = Molecular weight of O_2 divided by 100.

0.440 = Molecular weight of CO_2 divided by 100.

12.2 Nitrogen, Carbon Monoxide Concentration. Determine the percentage of the gas that is N_2 and CO by subtracting the sum of the percent CO_2 and percent O_2 from 100 percent.

12.3 Dry Molecular Weight. Use Equation 3–1 to calculate the dry molecular weight of the stack gas.

$$M_d = 0.440(\%CO_2) + 0.320(\%O_2) + 0.280(\%N_2 + \%CO) \qquad \text{Eq. 3-1}$$

Note: The above Equation 3–1 does not consider the effect on calculated dry molecular weight of argon in the effluent gas. The concentration of argon, with a molecular weight of 39.9, in ambient air is about 0.9 percent. A negative error of approximately 0.4 percent is introduced. The tester may choose to include argon in the analysis using procedures subject to approval of the Administrator.

13.0 Method Performance [Reserved]

14.0 Pollution Prevention [Reserved]

15.0 Waste Management [Reserved]

16.0 References

1. Altshuller, A.P. Storage of Gases and Vapors in Plastic Bags. International Journal of Air and Water Pollution. *6*:75–81. 1963.

2. Conner, William D. and J.S. Nader. Air Sampling with Plastic Bags. Journal of the American Industrial Hygiene Association. *25*:291–297. 1964.

3. Burrell Manual for Gas Analysts, Seventh edition. Burrell Corporation, 2223 Fifth Avenue, Pittsburgh, PA. 15219. 1951.

4. Mitchell, W.J. and M.R. Midgett. Field Reliability of the Orsat Analyzer. Journal of Air Pollution Control Association. *26*:491–495. May 1976.

5. Shigehara, R.T., R.M. Neulicht, and W.S. Smith. Validating Orsat Analysis Data from Fossil Fuel-Fired Units. Stack Sampling News. *4*(2):21–26. August 1976.

17.0 Tables, Diagrams, Flowcharts, and Validation Data

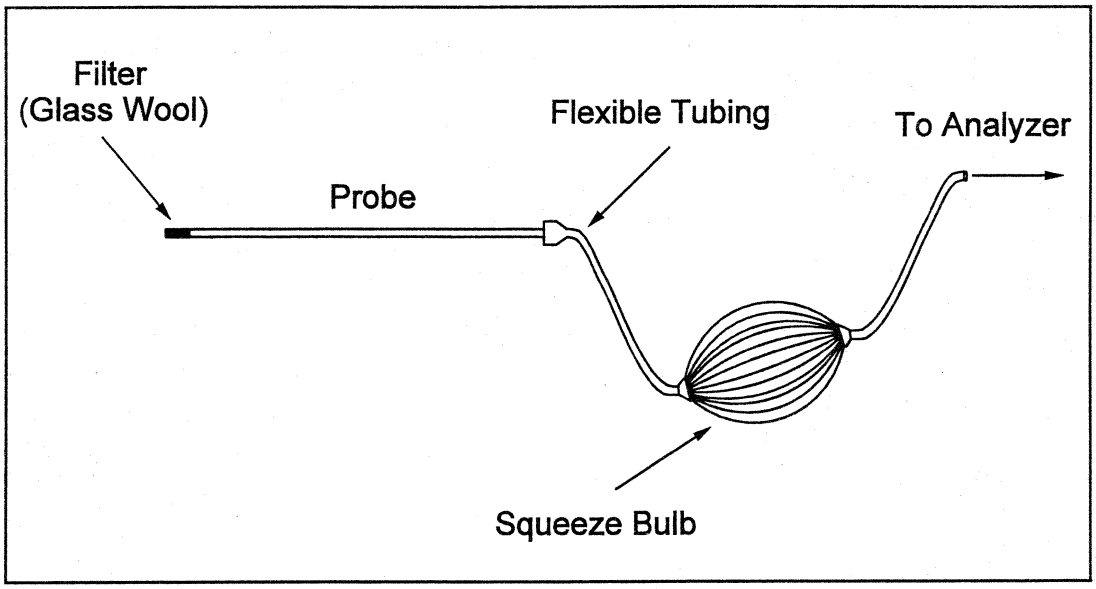

Figure 3-1. Grab-Sampling Train.

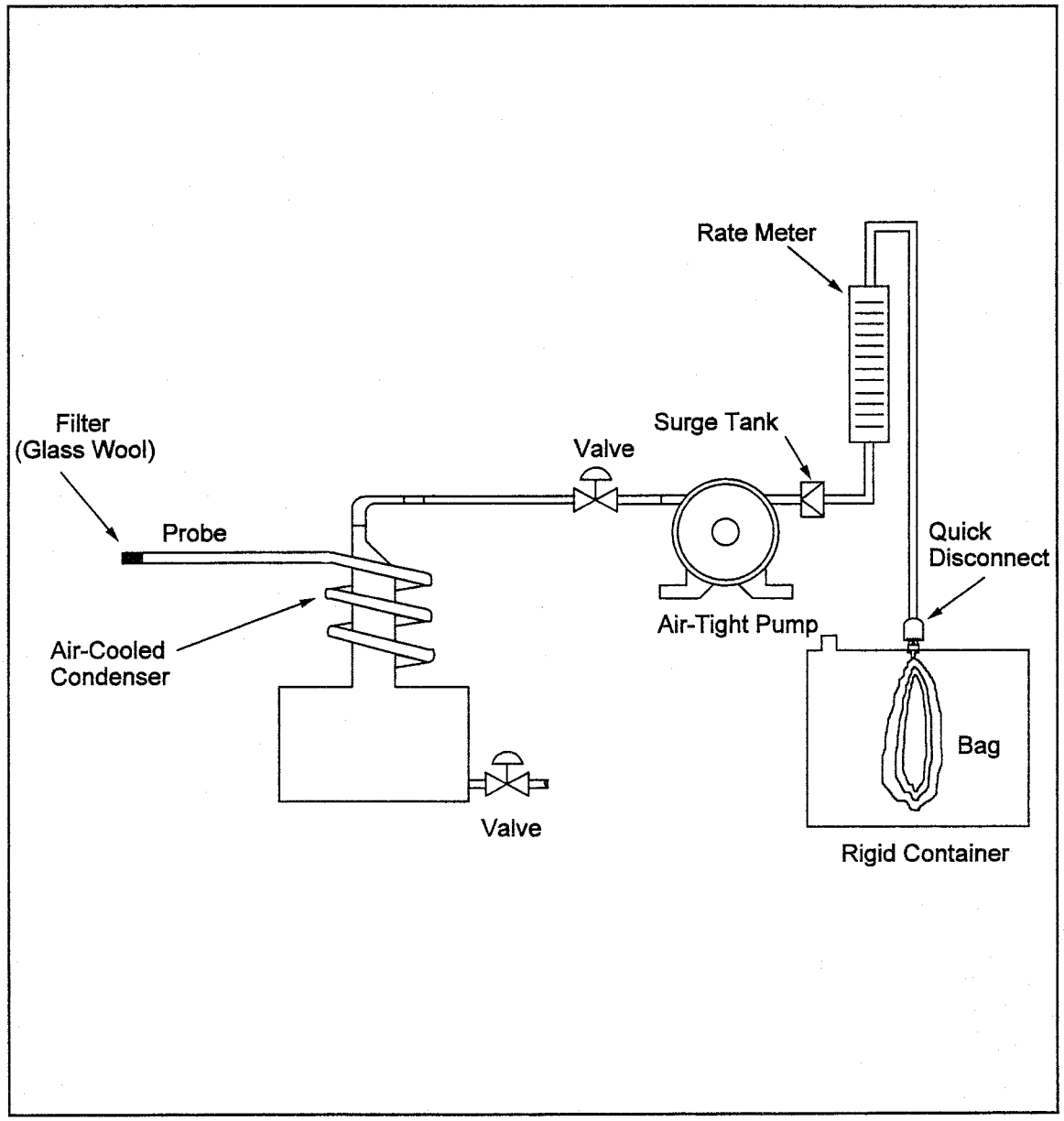

Figure 3-2. Integrated Gas-Sampling Train.

Time	Traverse point	Q (liter/min)	% Deviation [a]
Average			

[a] % Dev.=$[(Q - Q_{avg})/Q_{avg}]\times 100$ (Must be $\leq \pm 10\%$)

Figure 3–3. Sampling Rate Data

* * * * *

Method 3B—Gas Analysis for the Determination of Emission Rate Correction Factor or Excess Air

Note: This method does not include all of the specifications (*e.g.*, equipment and supplies) and procedures (*e.g.*, sampling) essential to its performance. Some material is incorporated by reference from other methods in this part. Therefore, to obtain reliable results, persons using this method should have a thorough knowledge of at least the following additional test methods: Method 1 and 3.

1.0 Scope and Application

1.1 Analytes.

Analyte	CAS No.	Sensitivity
Oxygen (O_2)	7782–44–7	2,000 ppmv.
Carbon Dioxide (CO_2)	124–38–9	2,000 ppmv.
Carbon Monoxide (CO)	630–08–0	N/A.

1.2 Applicability. This method is applicable for the determination of O_2, CO_2, and CO concentrations in the effluent from fossil-fuel combustion processes for use in excess air or emission rate correction factor calculations. Where compounds other than CO_2, O_2, CO, and nitrogen (N_2) are present in concentrations sufficient to affect the results, the calculation procedures presented in this method must be modified, subject to the approval of the Administrator.

1.3 Other methods, as well as modifications to the procedure described herein, are also applicable for all of the above determinations. Examples of specific methods and modifications include: (1) A multi-point sampling method using an Orsat analyzer to analyze individual grab samples obtained at each point, and (2) a method using CO_2 or O_2 and stoichiometric calculations to determine excess air. These methods and modifications may be used, but are subject to the approval of the Administrator.

1.4 Data Quality Objectives. Adherence to the requirements of this method will enhance the quality of the data obtained from air pollutant sampling methods.

2.0 Summary of Method

2.1 A gas sample is extracted from a stack by one of the following methods: (1) Single-point, grab sampling; (2) single-point, integrated sampling; or (3) multi-point, integrated sampling. The gas sample is analyzed for percent CO_2, percent O_2, and, if necessary, percent CO using an Orsat combustion gas analyzer.

3.0 Definitions [Reserved]

4.0 Interferences

4.1 Several compounds can interfere, to varying degrees, with the results of Orsat analyses. Compounds that interfere with CO2 concentration measurement include acid gases (*e.g.*, sulfur dioxide, hydrogen chloride); compounds that interfere with O_2 concentration measurement include unsaturated hydrocarbons (*e.g.*, acetone, acetylene), nitrous oxide, and ammonia. Ammonia reacts chemically with the O_2 absorbing solution, and when present in the effluent gas stream must be removed before analysis.

5.0 Safety

5.1 Disclaimer. This method may involve hazardous materials, operations, and equipment. This test method may not address all of the safety problems associated with its use. It is the responsibility of the user of this test method to establish appropriate safety and health practices and determine the applicability of regulatory limitations prior to performing this test method.

5.2 Corrosive Reagents. A typical Orsat analyzer requires four reagents: a gas-confining solution, CO_2 absorbent, O_2 absorbent, and CO absorbent. These reagents may contain potassium hydroxide, sodium hydroxide, cuprous chloride, cuprous sulfate, alkaline pyrogallic acid, and/or chromous chloride. Follow manufacturer's operating instructions and observe all warning labels for reagent use.

6.0 Equipment and Supplies

Note: As an alternative to the sampling apparatus and systems described herein, other sampling systems (*e.g.,* liquid displacement) may be used, provided such systems are capable of obtaining a representative sample and maintaining a constant sampling rate, and are, otherwise, capable of yielding acceptable results. Use of such systems is subject to the approval of the Administrator.

6.1 Grab Sampling and Integrated Sampling. Same as in Sections 6.1 and 6.2, respectively for Method 3.

6.2 Analysis. An Orsat analyzer only. For low CO_2 (less than 4.0 percent) or high O_2 (greater than 15.0 percent) concentrations, the measuring burette of the Orsat must have at least 0.1 percent subdivisions. For Orsat maintenance and operation procedures, follow the instructions recommended by the manufacturer, unless otherwise specified herein.

7.0 Reagents and Standards

7.1 Reagents. Same as in Method 3, Section 7.1.

7.2 Standards. Same as in Method 3, Section 7.2.

8.0 Sample Collection, Preservation, Storage, and Transport

Note: Each of the three procedures below shall be used only when specified in an applicable subpart of the standards. The use of these procedures for other purposes must have specific prior approval of the Administrator. A Fyrite-type combustion gas analyzer is not acceptable for excess air or emission rate correction factor determinations, unless approved by the Administrator. If both percent CO_2 and percent O_2 are measured, the analytical results of any of the three procedures given below may also be used for calculating the dry molecular weight (see Method 3).

8.1 Single-Point, Grab Sampling and Analytical Procedure.

8.1.1 The sampling point in the duct shall either be at the centroid of the cross section or at a point no closer to the walls than 1.0 m (3.3 ft), unless otherwise specified by the Administrator.

8.1.2 Set up the equipment as shown in Figure 3–1 of Method 3, making sure all connections ahead of the analyzer are tight. Leak-check the Orsat analyzer according to the procedure described in Section 11.5 of Method 3. This leak-check is mandatory.

8.1.3 Place the probe in the stack, with the tip of the probe positioned at the sampling point; purge the sampling line long enough to allow at least five exchanges. Draw a sample into the analyzer. For emission rate correction factor determinations, immediately analyze the sample for percent CO_2 or

percent O_2, as outlined in Section 11.2. For excess air determination, immediately analyze the sample for percent CO_2, O_2, and CO, as outlined in Section 11.2, and calculate excess air as outlined in Section 12.2.

8.1.4 After the analysis is completed, leak-check (mandatory) the Orsat analyzer once again, as described in Section 11.5 of Method 3. For the results of the analysis to be valid, the Orsat analyzer must pass this leak-test before and after the analysis.

8.2 Single-Point, Integrated Sampling and Analytical Procedure.

8.2.1 The sampling point in the duct shall be located as specified in Section 8.1.1.

8.2.2 Leak-check (mandatory) the flexible bag as in Section 6.2.6 of Method 3. Set up the equipment as shown in Figure 3–2 of Method 3. Just before sampling, leak-check (mandatory) the train by placing a vacuum gauge at the condenser inlet, pulling a vacuum of at least 250 mm Hg (10 in. Hg), plugging the outlet at the quick disconnect, and then turning off the pump. The vacuum should remain stable for at least 0.5 minute. Evacuate the flexible bag. Connect the probe, and place it in the stack, with the tip of the probe positioned at the sampling point; purge the sampling line. Next, connect the bag, and make sure that all connections are tight.

8.2.3 Sample at a constant rate, or as specified by the Administrator. The sampling run must be simultaneous with, and for the same total length of time as, the pollutant emission rate determination. Collect at least 28 liters (1.0 ft^3) of sample gas. Smaller volumes may be collected, subject to approval of the Administrator.

8.2.4 Obtain one integrated flue gas sample during each pollutant emission rate determination. For emission rate correction factor determination, analyze the sample within 4 hours after it is taken for percent CO_2 or percent O_2 (as outlined in Section 11.2).

8.3 Multi-Point, Integrated Sampling and Analytical Procedure.

8.3.1 Unless otherwise specified in an applicable regulation, or by the Administrator, a minimum of eight traverse points shall be used for circular stacks having diameters less than 0.61 m (24 in.), a minimum of nine shall be used for rectangular stacks having equivalent diameters less than 0.61 m (24 in.), and a minimum of 12 traverse points shall be used for all other cases. The traverse points shall be located according to Method 1.

8.3.2 Follow the procedures outlined in Sections 8.2.2 through 8.2.4, except for the following: Traverse all sampling points, and sample at each point for an equal length of time. Record sampling data as shown in Figure 3–3 of Method 3.

9.0 Quality Control

9.1 Data Validation Using Fuel Factor. Although in most instances, only CO_2 or O_2 measurement is required, it is recommended that both CO_2 and O_2 be measured to provide a check on the quality of the data. The data validation procedure of Section 12.3 is suggested.

Note: Since this method for validating the CO_2 and O_2 analyses is based on combustion of organic and fossil fuels and dilution of the gas stream with air, this method does not apply to sources that (1) remove CO_2 or O_2 through processes other than combustion, (2) add O_2 (*e.g.,* oxygen enrichment) and N_2 in proportions different from that of air, (3) add CO_2 (*e.g.,* cement or lime kilns), or (4) have no fuel factor, F_O, values obtainable (*e.g.,* extremely variable waste mixtures). This method validates the measured proportions of CO_2 and O_2 for fuel type, but the method does not detect sample dilution resulting from leaks during or after sample collection. The method is applicable for samples collected downstream of most lime or limestone flue-gas desulfurization units as the CO_2 added or removed from the gas stream is not significant in relation to the total CO_2 concentration. The CO_2 concentrations from other types of scrubbers using only water or basic slurry can be significantly affected and would render the fuel factor check minimally useful.

10.0 Calibration and Standardization

10.1 Analyzer. The analyzer and analyzer operator technique should be audited periodically as follows: take a sample from a manifold containing a known mixture of CO_2 and O_2, and analyze according to the procedure in Section 11.3. Repeat this procedure until the measured concentration of three consecutive samples agrees with the stated value ±0.5 percent. If necessary, take corrective action, as specified in the analyzer users manual.

10.2 Rotameter. The rotameter need not be calibrated, but should be cleaned and maintained according to the manufacturer's instruction.

11.0 Analytical Procedure

11.1 Maintenance. The Orsat analyzer should be maintained according to the manufacturers specifications.

11.2 Grab Sample Analysis. To ensure complete absorption of the CO_2, O_2, or if applicable, CO, make repeated passes through each absorbing solution until two consecutive readings are the same. Several passes (three or four) should be made between readings. (If constant readings cannot be obtained after three consecutive readings, replace the absorbing solution.) Although in most cases, only CO_2 or O_2 concentration is required, it is recommended that both CO_2 and O_2 be measured, and that the procedure in Section 12.3 be used to validate the analytical data.

Note: Since this single-point, grab sampling and analytical procedure is normally conducted in conjunction with a single-point, grab sampling and analytical procedure for a pollutant, only one analysis is ordinarily conducted. Therefore, great care must be taken to obtain a valid sample and analysis.

11.3 Integrated Sample Analysis. The Orsat analyzer must be leak-checked (see Section 11.5 of Method 3) before the analysis. If excess air is desired, proceed as follows: (1) within 4 hours after the sample is taken, analyze it (as in Sections 11.3.1 through 11.3.3) for percent CO_2, O_2, and CO; (2) determine the percentage of the gas that is N_2 by subtracting the sum of the percent CO_2, percent O_2, and percent CO from 100 percent; and (3) calculate percent excess air, as outlined in Section 12.2.

11.3.1 To ensure complete absorption of the CO_2, O_2, or if applicable, CO, follow the procedure described in Section 11.2.

Note: Although in most instances only CO_2 or O_2 is required, it is recommended that both CO_2 and O_2 be measured, and that the procedures in Section 12.3 be used to validate the analytical data.

11.3.2 Repeat the analysis until the following criteria are met:

11.3.2.1 For percent CO_2, repeat the analytical procedure until the results of any three analyses differ by no more than (a) 0.3 percent by volume when CO_2 is greater than 4.0 percent or (b) 0.2 percent by volume when CO_2 is less than or equal to 4.0 percent. Average three acceptable values of percent CO_2, and report the results to the nearest 0.2 percent.

11.3.2.2 For percent O_2, repeat the analytical procedure until the results of any three analyses differ by no more than (a) 0.3 percent by volume when O_2 is less than 15.0 percent or (b) 0.2 percent by volume when O_2 is greater than or equal to 15.0 percent. Average the three acceptable values of percent O_2, and report the results to the nearest 0.1 percent.

11.3.2.3 For percent CO, repeat the analytical procedure until the results of any three analyses differ by no more than 0.3 percent. Average the three acceptable values of percent CO, and

report the results to the nearest 0.1 percent.

11.3.3 After the analysis is completed, leak-check (mandatory) the Orsat analyzer once again, as described in Section 11.5 of Method 3. For the results of the analysis to be valid, the Orsat analyzer must pass this leak-test before and after the analysis.

11.4 Standardization. A periodic check of the reagents and of operator technique should be conducted at least once every three series of test runs as indicated in Section 10.1.

12.0 Calculations and Data Analysis

12.1 Nomenclature. Same as Section 12.1 of Method 3 with the addition of the following:

%EA = Percent excess air.
0.264 = Ratio of O_2 to N_2 in air, v/v.

12.2 Percent Excess Air. Determine the percentage of the gas that is N_2 by subtracting the sum of the percent CO_2, percent CO, and percent O_2 from 100 percent. Calculate the percent excess air (if applicable) by substituting the appropriate values of percent O_2, CO, and N_2 into Equation 3B–1.

$$\%EA = \frac{\%O_2 - 0.5\ \%CO}{0.264\ \%N_2 - (\%O_2 - 0.5\ \%CO)} \times 100 \qquad \text{Eq. 3B-1}$$

Note: The equation above assumes that ambient air is used as the source of O_2 and that the fuel does not contain appreciable amounts of N_2 (as do coke oven or blast furnace gases). For those cases when appreciable amounts of N_2 are present (coal, oil, and natural gas do not contain appreciable amounts of N_2) or when oxygen enrichment is used, alternative methods, subject to approval of the Administrator, are required.

12.3 Data Validation When Both CO_2 and O_2 Are Measured.

12.3.1 Fuel Factor, F_o. Calculate the fuel factor (if applicable) using Equation 3B–2:

$$F_o = \frac{20.9 - \%O_2}{\%CO_2} \qquad \text{Eq. 3B-2}$$

Where:
$\%O_2$ = Percent O_2 by volume, dry basis.
$\%CO_2$ = Percent CO_2 by volume, dry basis.
20.9 = Percent O_2 by volume in ambient air.

If CO is present in quantities measurable by this method, adjust the O_2 and CO_2 values using Equations 3B–3 and 3B–4 before performing the calculation for F_o:

$$\%CO_2(adj) = \%CO_2 + \%CO \qquad \text{Eq. 3B-3}$$

$$\%O_2(adj) = \%O_2 - 0.5\ \%CO \qquad \text{Eq. 3B-4}$$

Where:
%CO = Percent CO by volume, dry basis.

12.3.2 Compare the calculated F_o factor with the expected F_o values. Table 3B–1 in Section 17.0 may be used in establishing acceptable ranges for the expected F_o if the fuel being burned is known. When fuels are burned in combinations, calculate the combined fuel F_d and F_c factors (as defined in Method 19, Section 12.2) according to the procedure in Method 19, Sections 12.2 and 12.3. Then calculate the F_o factor according to Equation 3B–5.

$$F_o = \frac{0.209\ F_d}{F_c} \qquad \text{Eq. 3B-5}$$

12.3.3 Calculated F_o values, beyond the acceptable ranges shown in this table, should be investigated before accepting the test results. For example, the strength of the solutions in the gas analyzer and the analyzing technique should be checked by sampling and analyzing a known concentration, such as air; the fuel factor should be reviewed and verified. An acceptability range of ±12 percent is appropriate for the F_o factor of mixed fuels with variable fuel ratios. The level of the emission rate relative to the compliance level should be considered in determining if a retest is appropriate; i.e., if the measured emissions are much lower or much greater than the compliance limit, repetition of the test would not significantly change the compliance status of the source and would be unnecessarily time consuming and costly.

13.0 Method Performance. [Reserved]

14.0 Pollution Prevention. [Reserved]

15.0 Waste Management. [Reserved]

16.0 References

Same as Method 3, Section 16.0.

17.0 Tables, Diagrams, Flowcharts, and Validation Data

TABLE 3B–1.—F_o FACTORS FOR SELECTED FUELS

Fuel type	F_o range
Coal:	
Anthracite and lignite	1.016–1.130
Bituminous	1.083–1.230
Oil:	
Distillate	1.260–1.413
Residual	1.210–1.370
Gas:	
Natural	1.600–1.836
Propane	1.434–1.586
Butane	1.405–1.553
Wood	1.000–1.120
Wood bark	1.003–1.130

* * * * *

Method 4—Determination of Moisture Content in Stack Gases

Note: This method does not include all the specifications (*e.g.*, equipment and supplies) and procedures (*e.g.*, sampling) essential to its performance. Some material is incorporated by reference from other methods in this part. Therefore, to obtain reliable results, persons using this method should have a thorough knowledge of at least the following additional test methods: Method 1, Method 5, and Method 6.

1.0 Scope and Application

1.1 Analytes.

Analyte	CAS No.	Sensitivity
Water vapor (H_2O)	7732–18–5	N/A

1.2 Applicability. This method is applicable for the determination of the moisture content of stack gas.

1.3 Data Quality Objectives. Adherence to the requirements of this method will enhance the quality of the data obtained from air pollutant sampling methods.

2.0 Summary of Method

2.1 A gas sample is extracted at a constant rate from the source; moisture is removed from the sample stream and determined either volumetrically or gravimetrically.

2.2 The method contains two possible procedures: a reference method and an approximation method.

2.2.1 The reference method is used for accurate determinations of moisture content (such as are needed to calculate emission data). The approximation method, provides estimates of percent moisture to aid in setting isokinetic sampling rates prior to a pollutant emission measurement run. The approximation method described herein is only a suggested approach; alternative means for approximating the moisture content (*e.g.*, drying tubes, wet bulb-dry bulb techniques, condensation techniques, stoichiometric calculations, previous experience, etc.) are also acceptable.

2.2.2 The reference method is often conducted simultaneously with a pollutant emission measurement run. When it is, calculation of percent isokinetic, pollutant emission rate, etc., for the run shall be based upon the results of the reference method or its equivalent. These calculations shall not be based upon the results of the approximation method, unless the approximation method is shown, to the satisfaction of the Administrator, to be capable of yielding results within one percent H_2O of the reference method.

3.0 Definitions [Reserved]

4.0 Interferences

4.1 The moisture content of saturated gas streams or streams that contain water droplets, as measured by the reference method, may be positively biased. Therefore, when these conditions exist or are suspected, a second determination of the moisture content shall be made simultaneously with the reference method, as follows: Assume that the gas stream is saturated. Attach a temperature sensor [capable of measuring to ±1 °C (2 °F)] to the reference method probe. Measure the stack gas temperature at each traverse point (see Section 8.1.1.1) during the reference method traverse, and calculate the average stack gas temperature. Next, determine the moisture percentage, either by: (1) Using a psychrometric chart and making appropriate corrections if the stack pressure is different from that of the chart, or (2) using saturation vapor pressure tables. In cases where the psychrometric chart or the saturation vapor pressure tables are not applicable (based on evaluation of the process), alternative methods, subject to the approval of the Administrator, shall be used.

5.0 Safety

5.1 Disclaimer. This method may involve hazardous materials, operations, and equipment. This test method may not address all of the safety problems associated with its use. It is the responsibility of the user of this test method to establish appropriate safety and health practices and determine the applicability of regulatory limitations prior to performing this test method.

6.0 Equipment and Supplies

6.1 Reference Method. A schematic of the sampling train used in this reference method is shown in Figure 4–1.

6.1.1 Probe. Stainless steel or glass tubing, sufficiently heated to prevent water condensation, and equipped with a filter, either in-stack (*e.g.*, a plug of glass wool inserted into the end of the probe) or heated out-of-stack (*e.g.*, as described in Method 5), to remove particulate matter. When stack conditions permit, other metals or plastic tubing may be used for the probe, subject to the approval of the Administrator.

6.1.2 Condenser. Same as Method 5, Section 6.1.1.8.

6.1.3 Cooling System. An ice bath container, crushed ice, and water (or equivalent), to aid in condensing moisture.

6.1.4 Metering System. Same as in Method 5, Section 6.1.1.9, except do not use sampling systems designed for flow rates higher than 0.0283 m^3/min (1.0 cfm). Other metering systems, capable of maintaining a constant sampling rate to within 10 percent and determining sample gas volume to within 2 percent, may be used, subject to the approval of the Administrator.

6.1.5 Barometer and Graduated Cylinder and/or Balance. Same as Method 5, Sections 6.1.2 and 6.2.5, respectively.

6.2. Approximation Method. A schematic of the sampling train used in this approximation method is shown in Figure 4–2.

6.2.1 Probe. Same as Section 6.1.1.

6.2.2 Condenser. Two midget impingers, each with 30-ml capacity, or equivalent.

6.2.3 Cooling System. Ice bath container, crushed ice, and water, to aid in condensing moisture in impingers.

6.2.4 Drying Tube. Tube packed with new or regenerated 6- to 16-mesh indicating-type silica gel (or equivalent desiccant), to dry the sample gas and to protect the meter and pump.

6.2.5 Valve. Needle valve, to regulate the sample gas flow rate.

6.2.6 Pump. Leak-free, diaphragm type, or equivalent, to pull the gas sample through the train.

6.2.7 Volume Meter. Dry gas meter, sufficiently accurate to measure the sample volume to within 2 percent, and calibrated over the range of flow rates and conditions actually encountered during sampling.

6.2.8 Rate Meter. Rotameter, or equivalent, to measure the flow range from 0 to 3 liters/min (0 to 0.11 cfm).

6.2.9 Graduated Cylinder. 25-ml.

6.2.10 Barometer. Same as Method 5, Section 6.1.2.

6.2.11 Vacuum Gauge. At least 760-mm (30-in.) Hg gauge, to be used for the sampling leak check.

7.0 Reagents and Standards [Reserved]

8.0 Sample Collection, Preservation, Transport, and Storage

8.1 Reference Method. The following procedure is intended for a condenser system (such as the impinger system described in Section 6.1.1.8 of Method 5) incorporating volumetric analysis to measure the condensed moisture, and silica gel and gravimetric analysis to measure the moisture leaving the condenser.

8.1.1 Preliminary Determinations.

8.1.1.1 Unless otherwise specified by the Administrator, a minimum of eight traverse points shall be used for circular stacks having diameters less than 0.61 m (24 in.), a minimum of nine points shall be used for rectangular stacks having equivalent diameters less than 0.61 m (24 in.), and a minimum of twelve traverse points shall be used in all other cases. The traverse points shall be located according to Method 1. The use of fewer points is subject to the approval of the Administrator. Select a suitable probe and probe length such that all traverse points can be sampled. Consider sampling from opposite sides of the stack (four total sampling ports) for large stacks, to permit use of shorter probe lengths. Mark the probe with heat resistant tape or by some other method to denote the proper distance into the stack or duct for each sampling point.

8.1.1.2 Select a total sampling time such that a minimum total gas volume of 0.60 scm (21 scf) will be collected, at a rate no greater than 0.021 m^3/min (0.75 cfm). When both moisture content and pollutant emission rate are to be determined, the moisture determination shall be simultaneous with, and for the same total length of time as, the pollutant emission rate run, unless otherwise specified in an applicable subpart of the standards.

8.1.2 Preparation of Sampling Train.

8.1.2.1 Place known volumes of water in the first two impingers; alternatively, transfer water into the first two impingers and record the weight of each impinger (plus water) to the nearest 0.5 g. Weigh and record the weight of the silica gel to the nearest 0.5 g, and transfer the silica gel to the fourth impinger; alternatively, the silica gel may first be transferred to the impinger, and the weight of the silica gel plus impinger recorded.

8.1.2.2 Set up the sampling train as shown in Figure 4–1. Turn on the probe heater and (if applicable) the filter heating system to temperatures of approximately 120 °C (248 °F), to prevent water condensation ahead of the condenser. Allow time for the temperatures to stabilize. Place crushed ice and water in the ice bath container.

8.1.3 Leak Check Procedures. It is recommended, but not required, that the volume metering system and sampling train be leak-checked as follows:

8.1.3.1 Metering System. Same as Method 5, Section 8.4.1.

8.1.3.2 Sampling Train. Disconnect the probe from the first impinger or (if applicable) from the filter holder. Plug the inlet to the first impinger (or filter holder), and pull a 380 mm (15 in.) Hg vacuum. A lower vacuum may be used, provided that it is not exceeded during the test. A leakage rate in excess of 4 percent of the average sampling rate or 0.00057 m^3/min (0.020 cfm), whichever is less, is unacceptable. Following the leak check, reconnect the probe to the sampling train.

8.1.4 Sampling Train Operation. During the sampling run, maintain a sampling rate within 10 percent of constant rate, or as specified by the Administrator. For each run, record the data required on a data sheet similar to that shown in Figure 4–3. Be sure to record the dry gas meter reading at the beginning and end of each sampling time increment and whenever sampling is halted. Take other appropriate readings at each sample point at least once during each time increment.

Note: When Method 4 is used concurrently with an isokinetic method (*e.g.,* Method 5) the sampling rate should be maintained at isokinetic conditions rather than 10 percent of constant rate.

8.1.4.1 To begin sampling, position the probe tip at the first traverse point. Immediately start the pump, and adjust the flow to the desired rate. Traverse the cross section, sampling at each traverse point for an equal length of time. Add more ice and, if necessary, salt to maintain a temperature of less than 20 °C (68 °F) at the silica gel outlet.

8.1.4.2 After collecting the sample, disconnect the probe from the first impinger (or from the filter holder), and conduct a leak check (mandatory) of the sampling train as described in Section 8.1.3.2. Record the leak rate. If the leakage rate exceeds the allowable rate, either reject the test results or correct the sample volume as in Section 12.3 of Method 5.

8.2 Approximation Method.

Note: The approximation method described below is presented only as a suggested method (see Section 2.0).

8.2.1 Place exactly 5 ml water in each impinger. Leak check the sampling train as follows: Temporarily insert a vacuum gauge at or near the probe inlet. Then, plug the probe inlet and pull a vacuum of at least 250 mm (10 in.) Hg. Note the time rate of change of the dry gas meter dial; alternatively, a rotameter (0 to 40 ml/min) may be temporarily attached to the dry gas meter outlet to determine the leakage rate. A leak rate not in excess of 2 percent of the average sampling rate is acceptable.

Note: Release the probe inlet plug slowly before turning off the pump.

8.2.2 Connect the probe, insert it into the stack, and sample at a constant rate of 2 liters/min (0.071 cfm). Continue sampling until the dry gas meter registers about 30 liters (1.1 ft^3) or until visible liquid droplets are carried over from the first impinger to the second. Record temperature, pressure, and dry gas meter readings as indicated by Figure 4–4.

9.0 Quality Control

9.1 Miscellaneous Quality Control Measures.

Section	Quality control measure	Effect
Section 8.1.1.4	Leak rate of the sampling system cannot exceed four percent of the average sampling rate or 0.00057 m^3/min (0.20 cfm).	Ensures the accuracy of the volume of gas sampled. (Reference Method)
Section 8.2.1	Leak rate of the sampling system cannot exceed two percent of the average sampling rate.	Ensures the accuracy of the volume of gas sampled. (Approximation Method)

9.2 Volume Metering System Checks. Same as Method 5, Section 9.2.

10.0 Calibration and Standardization

Note: Maintain a laboratory log of all calibrations.

10.1 Reference Method. Calibrate the metering system, temperature sensors, and barometer according to Method 5, Sections 10.3, 10.5, and 10.6, respectively.

10.2 Approximation Method. Calibrate the metering system and the barometer according to Method 6, Section 10.1 and Method 5, Section 10.6, respectively.

11.0 Analytical Procedure

11.1 Reference Method. Measure the volume of the moisture condensed in each of the impingers to the nearest ml. Alternatively, if the impingers were weighed prior to sampling, weigh the impingers after sampling and record the difference in weight to the nearest 0.5 g. Determine the increase in weight of the silica gel (or silica gel plus impinger) to the nearest 0.5 g. Record this information (see example data sheet, Figure 4–5), and calculate the moisture content, as described in Section 12.0.

11.2 Approximation Method. Combine the contents of the two impingers, and measure the volume to the nearest 0.5 ml.

12.0 Data Analysis and Calculations

Carry out the following calculations, retaining at least one extra significant figure beyond that of the acquired data. Round off figures after final calculation.

12.1 Reference Method.

12.1.1 Nomenclature.

B_{ws} = Proportion of water vapor, by volume, in the gas stream.

M_w = Molecular weight of water, 18.0 g/g-mole (18.0 lb/lb-mole).

P_m = Absolute pressure (for this method, same as barometric pressure) at the dry gas meter, mm Hg (in. Hg).

P_{std} = Standard absolute pressure, 760 mm Hg (29.92 in. Hg).

R = Ideal gas constant, 0.06236 (mm Hg)(m^3)/(g-mole)(°K) for metric units and 21.85 (in. Hg)(ft^3)/(lb-mole)(°R) for English units.

T_m = Absolute temperature at meter, °K (°R).

T_{std} = Standard absolute temperature, 293 °K (528 °R).

V_f = Final volume of condenser water, ml.
V_i = Initial volume, if any, of condenser water, ml.
V_m = Dry gas volume measured by dry gas meter, dcm (dcf).
$V_{m(std)}$ = Dry gas volume measured by the dry gas meter, corrected to standard conditions, dscm (dscf).
$V_{wc(std)}$ = Volume of water vapor condensed, corrected to standard conditions, scm (scf).
$V_{wsg(std)}$ = Volume of water vapor collected in silica gel, corrected to standard conditions, scm (scf).
W_f = Final weight of silica gel or silica gel plus impinger, g.
W_i = Initial weight of silica gel or silica gel plus impinger, g.
Y = Dry gas meter calibration factor.
ΔV_m = Incremental dry gas volume measured by dry gas meter at each traverse point, dcm (dcf).
ρ_w = Density of water, 0.9982 g/ml (0.002201 lb/ml).

12.1.2 Volume of Water Vapor Condensed.

$$V_{wc(std)} = \frac{(V_f - V_i)\,\rho_w R\,T_{std}}{P_{std} M_W} = K_1 (V_f - V_i) \qquad \text{Eq. 4-1}$$

Where:

K_1 = 0.001333 m³/ml for metric units,
= 0.04706 ft³/ml for English units.

12.1.3 Volume of Water Collected in Silica Gel.

$$V_{wsg(std)} = \frac{(W_f - W_i)\,R\,T_{std}}{P_{std} M_W K_2} = K_3 (W_f - W_i) \qquad \text{Eq. 4-2}$$

Where:

K_2 = 1.0 g/g for metric units,
= 453.6 g/lb for English units.
K_3 = 0.001335 m³/g for metric units,
= 0.04715 ft³/g for English units.

12.1.4 Sample Gas Volume.

$$V_{m(std)} = \frac{V_m\,Y\,P_m T_{std}}{P_{std} T_m} = K_4 Y \frac{V_m P_m}{T_m} \qquad \text{Eq. 4-3}$$

Where:

K_4 = 0.3855 °K/mm Hg for metric units,
= 17.64 °R/in. Hg for English units.

Note: If the post-test leak rate (Section 8.1.4.2) exceeds the allowable rate, correct the value of Vm in Equation 4–3, as described in Section 12.3 of Method 5.

12.1.5 Moisture Content.

$$B_{ws} = \frac{V_{wc(std)} + V_{wsg(std)}}{V_{wc(std)} + V_{wsg(std)} + V_{m(std)}} \qquad \text{Eq. 4-4}$$

12.1.6 Verification of Constant Sampling Rate. For each time increment, determine the ΔV_m. Calculate the average. If the value for any time increment differs from the average by more than 10 percent, reject the results, and repeat the run.

12.1.7 In saturated or moisture droplet-laden gas streams, two calculations of the moisture content of the stack gas shall be made, one using a value based upon the saturated conditions (see Section 4.1), and another based upon the results of the impinger analysis. The lower of these two values of B_{ws} shall be considered correct.

12.2 Approximation Method. The approximation method presented is designed to estimate the moisture in the stack gas; therefore, other data, which are only necessary for accurate moisture determinations, are not collected. The following equations adequately estimate the moisture content for the purpose of determining isokinetic sampling rate settings.

12.2.1 Nomenclature.

B_{wm} = Approximate proportion by volume of water vapor in the gas stream leaving the second impinger, 0.025.
B_{ws} = Water vapor in the gas stream, proportion by volume.
M_w = Molecular weight of water, 18.0 g/g-mole (18.0 lb/lb-mole).
P_m = Absolute pressure (for this method, same as barometric pressure) at the dry gas meter, mm Hg (in. Hg).
P_{std} = Standard absolute pressure, 760 mm Hg (29.92 in. Hg).
R = Ideal gas constant, 0.06236 [(mm Hg)(m³)]/[(g-mole)(K)] for metric units and 21.85 [(in. Hg)(ft³)]/[(lb-mole)(°R)] for English units.
T_m = Absolute temperature at meter, °K (°R).
T_{std} = Standard absolute temperature, 293 °K (528 °R).
V_f = Final volume of impinger contents, ml.
V_i = Initial volume of impinger contents, ml.
V_m = Dry gas volume measured by dry gas meter, dcm (dcf).
$V_{m(std)}$ = Dry gas volume measured by dry gas meter, corrected to standard conditions, dscm (dscf).
$V_{wc(std)}$ = Volume of water vapor condensed, corrected to standard conditions, scm (scf).
Y = Dry gas meter calibration factor.
ρ_w = Density of water, 0.09982 g/ml (0.002201 lb/ml).

12.2.2 Volume of Water Vapor Collected.

$$V_{wc(std)} = \frac{(V_f - V_i)\,\rho_w R\,T_{std}}{P_{std} M_W} = K_5 (V_f - V_i) \qquad \text{Eq. 4-5}$$

Where:

K_5 = 0.001333 m³/ml for metric units,
= 0.04706 ft³/ml for English units.

12.2.3 Sample Gas Volume.

$$V_{m(std)} = \frac{V_m\,Y\,P_m T_{std}}{P_{std} T_m} = K_6 Y \frac{V_m P_m}{T_m} \qquad \text{Eq. 4-6}$$

Where:

K_6 = 0.3855 °K/mm Hg for metric units,
= 17.64 °R/in. Hg for English units.

12.2.4 Approximate Moisture Content.

$$B_{ws} = \frac{V_{wc(std)}}{V_{wc(std)} + V_{m(std)}} + B_{wm} = \frac{V_{wc(std)}}{V_{wc(std)} + V_{m(std)}} + (0.025) \qquad \text{Eq. 4-7}$$

13.0 Method Performance [Reserved]

14.0 Pollution Prevention [Reserved]

15.0 Waste Management [Reserved]

16.0 Alternative Procedures

The procedure described in Method 5 for determining moisture content is acceptable as a reference method.

17.0 References

1. Air Pollution Engineering Manual (Second Edition). Danielson, J.A. (ed.). U.S. Environmental Protection Agency, Office of Air Quality Planning and Standards. Research Triangle Park, NC. Publication No. AP–40. 1973.
2. Devorkin, Howard, et al. Air Pollution Source Testing Manual. Air Pollution Control District, Los Angeles, CA. November 1963.
3. Methods for Determination of Velocity, Volume, Dust and Mist Content of Gases. Western Precipitation Division of Joy Manufacturing Co. Los Angeles, CA. Bulletin WP–50. 1968.

18.0 Tables, Diagrams, Flowcharts, and Validation Data

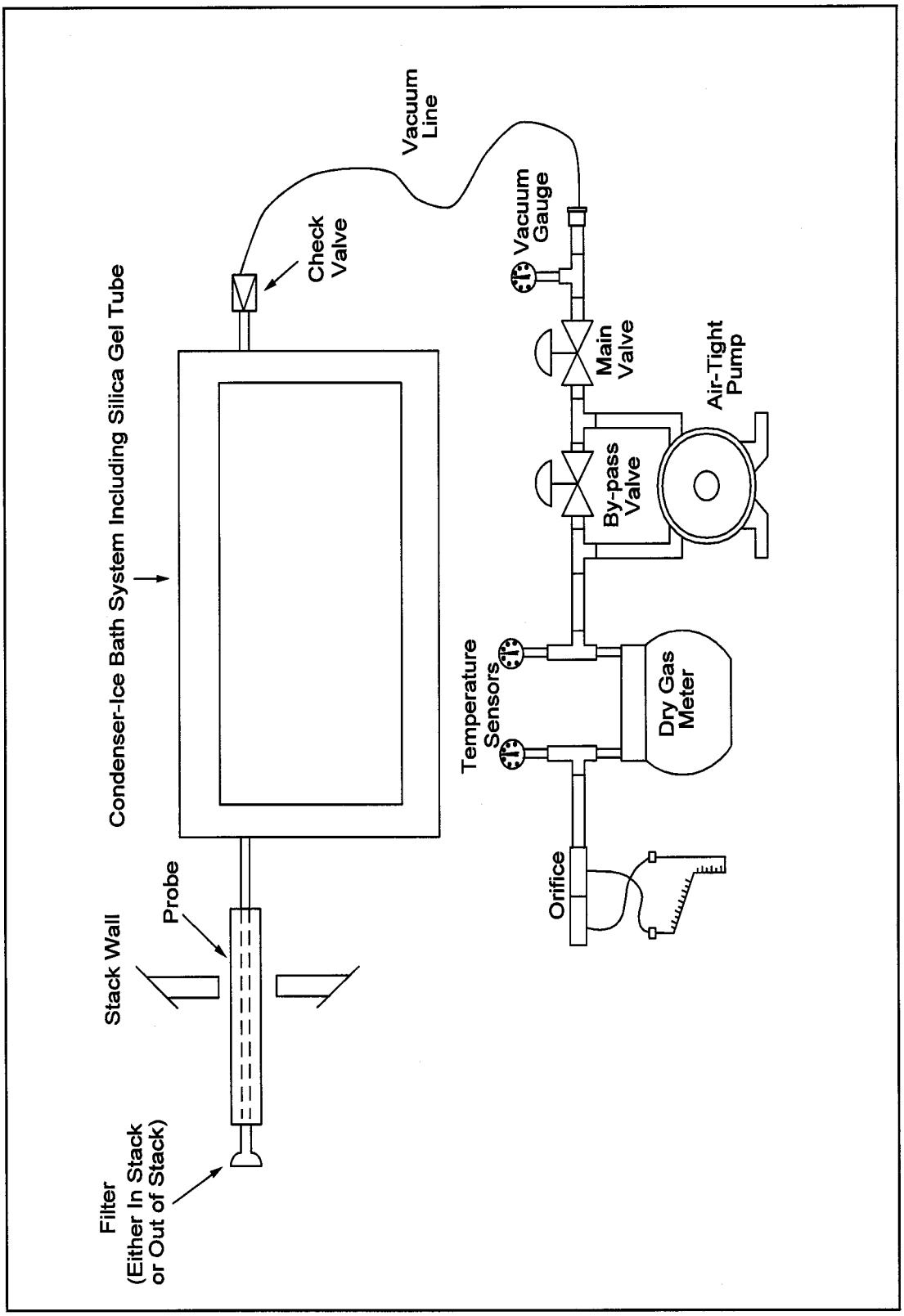

Figure 4-1. Moisture Sampling Train-Reference Method

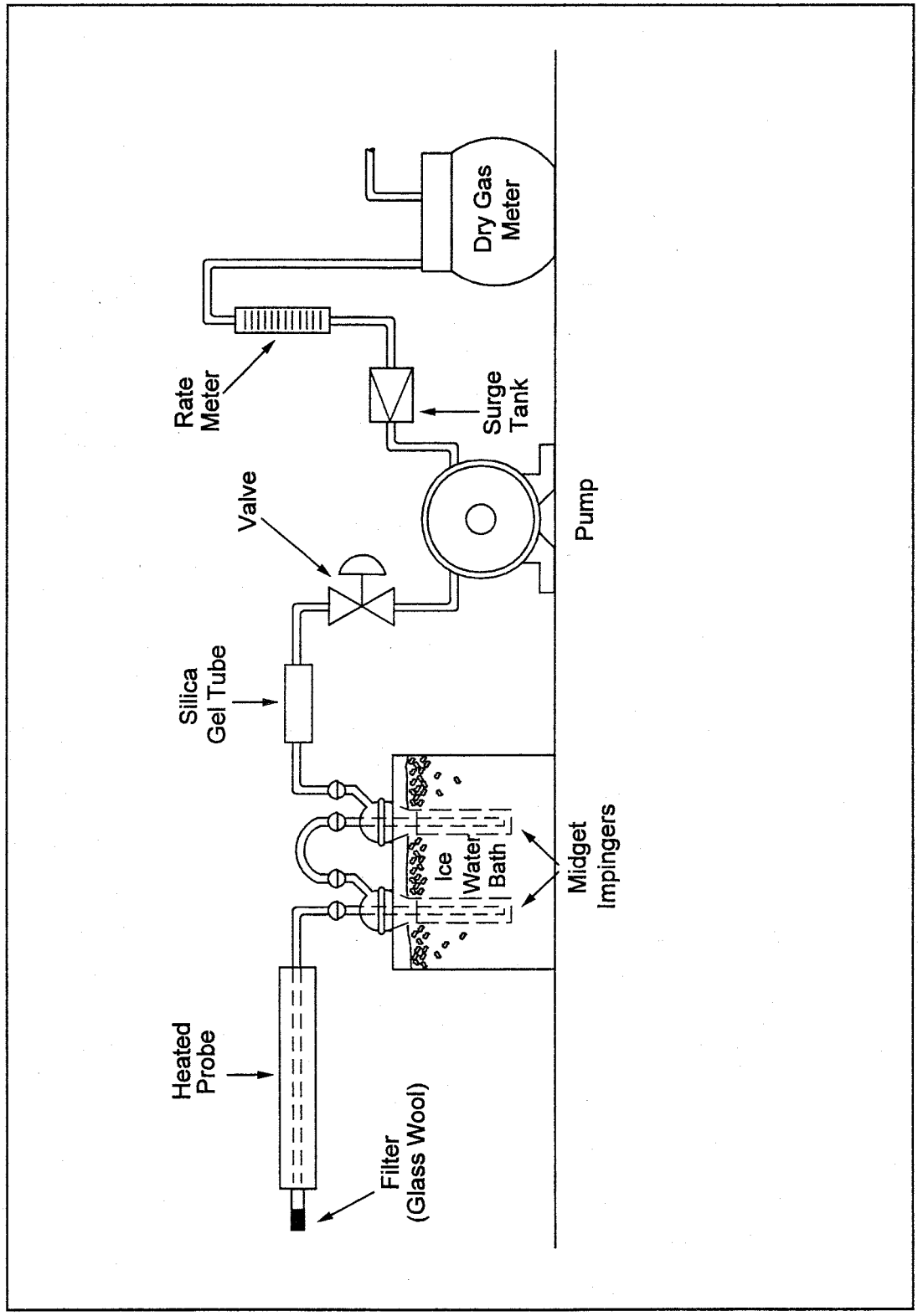

Figure 4-2. Moisture Sampling Train - Approximation Method.

Plant
Location
Operator
Date
Run No.
Ambient temperature
Barometric pressure
Probe Length

SCHEMATIC OF STACK CROSS SECTION

Traverse Pt. No.	Sampling time (Δ), min	Stack temperature °C (°F)	Pressure differential across orifice meter ΔH mm (in.) H_2O	Meter reading gas sample volume m^3 (ft^3)	ΔV_m m^3 (ft^3)	Gas sample temperature at dry gas meter		Temperature of gas leaving condenser or last impinger °C (°F)
						Inlet Tm_{in} °C (°F)	Outlet Tm_{out} °C (°F)	
Average								

Location
Test
Date
Operator
Barometric pressure
Comments:

Figure 4–3. Moisture Determination—Reference Method

Clock time	Gas Volume through meter, (V_m), m^3 (ft^3)	Rate meter setting m^3/min (ft^3/min)	Meter temperature °C (°F)

Figure 4–4. Example Moisture Determination Field Data Sheet—Approximation Method

	Impinger volume, ml	Silica gel weight, g
Final Initial Difference		

Figure 4–5. Analytical Data—Reference Method

Method 5—Determination of Particulate Matter Emissions From Stationary Sources

Note: This method does not include all of the specifications (*e.g.,* equipment and supplies) and procedures (*e.g.,* sampling and analytical) essential to its performance. Some material is incorporated by reference from other methods in this part. Therefore, to obtain reliable results, persons using this method should have a thorough knowledge of at least the following additional test methods: Method 1, Method 2, Method 3.

1.0 Scope and Application

1.1 Analyte. Particulate matter (PM). No CAS number assigned.

1.2 Applicability. This method is applicable for the determination of PM emissions from stationary sources.

1.3 Data Quality Objectives. Adherence to the requirements of this method will enhance the quality of the data obtained from air pollutant sampling methods.

2.0 Summary of Method

Particulate matter is withdrawn isokinetically from the source and collected on a glass fiber filter maintained at a temperature of 120 ± 14°C (248 ± 25°F) or such other temperature as specified by an applicable subpart of the standards or approved by the Administrator for a particular application. The PM mass, which includes any material that condenses at or above the filtration temperature, is determined gravimetrically after the removal of uncombined water.

3.0 Definitions [Reserved]

4.0 Interferences [Reserved]

5.0 Safety

5.1 Disclaimer. This method may involve hazardous materials, operations, and equipment. This test method may not address all of the safety problems associated with its use. It is the responsibility of the user of this test method to establish appropriate safety and health practices and to determine the applicability of regulatory limitations prior to performing this test method.

6.0 Equipment and Supplies

6.1 Sample Collection. The following items are required for sample collection:

6.1.1 Sampling Train. A schematic of the sampling train used in this method is shown in Figure 5–1 in Section 18.0. Complete construction details are given in APTD–0581 (Reference 2 in Section 17.0); commercial models of this train are also available. For changes from APTD–0581 and for allowable modifications of the train shown in Figure 5–1, see the following subsections.

Note: The operating and maintenance procedures for the sampling train are described in APTD–0576 (Reference 3 in Section 17.0). Since correct usage is important in obtaining valid results, all users should read APTD–0576 and adopt the operating and maintenance procedures outlined in it, unless otherwise specified herein.

6.1.1.1 Probe Nozzle. Stainless steel (316) or glass with a sharp, tapered leading edge. The angle of taper shall be ≤30°, and the taper shall be on the outside to preserve a constant internal diameter. The probe nozzle shall be of the button-hook or elbow design, unless otherwise specified by the Administrator. If made of stainless steel, the nozzle shall be constructed from seamless tubing. Other materials of construction may be used, subject to the approval of the Administrator. A range of nozzle sizes suitable for isokinetic sampling should be available. Typical nozzle sizes range from 0.32 to 1.27 cm (⅛ to ½ in) inside diameter (ID) in increments of 0.16 cm (1/16 in). Larger nozzles sizes are also available if higher volume sampling trains are used. Each nozzle shall be calibrated, according to the procedures outlined in Section 10.1.

6.1.1.2 Probe Liner. Borosilicate or quartz glass tubing with a heating system capable of maintaining a probe gas temperature during sampling of 120 ± 14 °C (248 ± 25 °F), or such other temperature as specified by an applicable subpart of the standards or as approved by the Administrator for a particular application. Since the actual temperature at the outlet of the probe is not usually monitored during sampling, probes constructed according to APTD–0581 and utilizing the calibration curves of APTD–0576 (or calibrated according to the procedure outlined in APTD–0576) will be considered acceptable. Either borosilicate or quartz glass probe liners may be used for stack temperatures up to about 480 °C (900 °F); quartz glass liners shall be used for temperatures between 480 and 900 °C (900 and 1,650 °F). Both types of liners may be used at higher temperatures than specified for short periods of time, subject to the approval of the Administrator. The softening temperature for borosilicate glass is 820 °C (1500°F), and for quartz glass it is 1500 °C (2700 °F). Whenever practical, every effort should be made to use borosilicate or quartz glass probe liners. Alternatively, metal liners (e.g., 316 stainless steel, Incoloy 825 or other corrosion resistant metals) made of seamless tubing may be used, subject to the approval of the Administrator.

6.1.1.3 Pitot Tube. Type S, as described in Section 6.1 of Method 2, or other device approved by the Administrator. The pitot tube shall be attached to the probe (as shown in Figure 5–1) to allow constant monitoring of the stack gas velocity. The impact (high pressure) opening plane of the pitot tube shall be even with or above the nozzle entry plane (see Method 2, Figure 2–7) during sampling. The Type S pitot tube assembly shall have a known coefficient, determined as outlined in Section 10.0 of Method 2.

6.1.1.4 Differential Pressure Gauge. Inclined manometer or equivalent device (two), as described in Section 6.2 of Method 2. One manometer shall be used for velocity head (Δp) readings, and the other, for orifice differential pressure readings.

6.1.1.5 Filter Holder. Borosilicate glass, with a glass frit filter support and a silicone rubber gasket. Other materials of construction (*e.g.,* stainless steel, Teflon, or Viton) may be used, subject to the approval of the Administrator. The holder design shall provide a positive seal against leakage from the outside or around the filter. The holder shall be attached immediately at the outlet of the probe (or cyclone, if used).

6.1.1.6 Filter Heating System. Any heating system capable of maintaining a temperature around the filter holder of 120 ±14 °C (248 ±25 °F) during sampling, or such other temperature as specified by an applicable subpart of the standards or approved by the Administrator for a particular application.

6.1.1.7 Temperature Sensor. A temperature sensor capable of measuring temperature to within ±3 °C (5.4 °F) shall be installed so that the sensing tip of the temperature sensor is in direct contact with the sample gas, and the temperature around the filter holder can be regulated and monitored during sampling.

6.1.1.8 Condenser. The following system shall be used to determine the stack gas moisture content: Four impingers connected in series with leak-free ground glass fittings or any similar leak-free noncontaminating fittings. The first, third, and fourth impingers shall be of the Greenburg-Smith design, modified by replacing the tip with a 1.3 cm (½ in.) ID glass tube extending to about 1.3 cm (½ in.) from the bottom of the flask. The second impinger shall be of the Greenburg-Smith design with the standard tip. Modifications (e.g., using flexible connections between the impingers, using materials other than glass, or using flexible vacuum lines to connect the filter holder to the condenser) may be used, subject to the approval of the Administrator. The first and second impingers shall contain known quantities of water (Section 8.3.1), the third shall be empty, and the fourth shall contain a known weight of silica gel, or equivalent desiccant. A temperature sensor, capable of measuring temperature to within 1 °C (2 °F) shall be placed at the outlet of the fourth impinger for monitoring purposes. Alternatively, any system that cools the sample gas stream and allows

measurement of the water condensed and moisture leaving the condenser, each to within 1 ml or 1 g may be used, subject to the approval of the Administrator. An acceptable technique involves the measurement of condensed water either gravimetrically or volumetrically and the determination of the moisture leaving the condenser by: (1) monitoring the temperature and pressure at the exit of the condenser and using Dalton's law of partial pressures; or (2) passing the sample gas stream through a tared silica gel (or equivalent desiccant) trap with exit gases kept below 20 °C (68 °F) and determining the weight gain. If means other than silica gel are used to determine the amount of moisture leaving the condenser, it is recommended that silica gel (or equivalent) still be used between the condenser system and pump to prevent moisture condensation in the pump and metering devices and to avoid the need to make corrections for moisture in the metered volume.

Note: If a determination of the PM collected in the impingers is desired in addition to moisture content, the impinger system described above shall be used, without modification. Individual States or control agencies requiring this information shall be contacted as to the sample recovery and analysis of the impinger contents.

6.1.1.9 Metering System. Vacuum gauge, leak-free pump, temperature sensors capable of measuring temperature to within 3 °C (5.4 °F), dry gas meter (DGM) capable of measuring volume to within 2 percent, and related equipment, as shown in Figure 5–1. Other metering systems capable of maintaining sampling rates within 10 percent of isokinetic and of determining sample volumes to within 2 percent may be used, subject to the approval of the Administrator. When the metering system is used in conjunction with a pitot tube, the system shall allow periodic checks of isokinetic rates.

6.1.1.10 Sampling trains utilizing metering systems designed for higher flow rates than that described in APTD–0581 or APTD–0576 may be used provided that the specifications of this method are met.

6.1.2 Barometer. Mercury, aneroid, or other barometer capable of measuring atmospheric pressure to within 2.5 mm Hg (0.1 in.).

Note: The barometric pressure reading may be obtained from a nearby National Weather Service station. In this case, the station value (which is the absolute barometric pressure) shall be requested and an adjustment for elevation differences between the weather station and sampling point shall be made at a rate of minus 2.5 mm Hg (0.1 in.) per 30 m (100 ft) elevation increase or plus 2.5 mm Hg (0.1 in) per 30 m (100 ft) elevation decrease.

6.1.3 Gas Density Determination Equipment. Temperature sensor and pressure gauge, as described in Sections 6.3 and 6.4 of Method 2, and gas analyzer, if necessary, as described in Method 3. The temperature sensor shall, preferably, be permanently attached to the pitot tube or sampling probe in a fixed configuration, such that the tip of the sensor extends beyond the leading edge of the probe sheath and does not touch any metal. Alternatively, the sensor may be attached just prior to use in the field. Note, however, that if the temperature sensor is attached in the field, the sensor must be placed in an interference-free arrangement with respect to the Type S pitot tube openings (see Method 2, Figure 2–4). As a second alternative, if a difference of not more than 1 percent in the average velocity measurement is to be introduced, the temperature sensor need not be attached to the probe or pitot tube. (This alternative is subject to the approval of the Administrator.)

6.2 Sample Recovery. The following items are required for sample recovery:

6.2.1 Probe-Liner and Probe-Nozzle Brushes. Nylon bristle brushes with stainless steel wire handles. The probe brush shall have extensions (at least as long as the probe) constructed of stainless steel, Nylon, Teflon, or similarly inert material. The brushes shall be properly sized and shaped to brush out the probe liner and nozzle.

6.2.2 Wash Bottles. Two Glass wash bottles are recommended. Alternatively, polyethylene wash bottles may be used. It is recommended that acetone not be stored in polyethylene bottles for longer than a month.

6.2.3 Glass Sample Storage Containers. Chemically resistant, borosilicate glass bottles, for acetone washes, 500 ml or 1000 ml. Screw cap liners shall either be rubber-backed Teflon or shall be constructed so as to be leak-free and resistant to chemical attack by acetone. (Narrow mouth glass bottles have been found to be less prone to leakage.) Alternatively, polyethylene bottles may be used.

6.2.4 Petri Dishes. For filter samples; glass or polyethylene, unless otherwise specified by the Administrator.

6.2.5 Graduated Cylinder and/or Balance. To measure condensed water to within 1 ml or 0.5 g. Graduated cylinders shall have subdivisions no greater than 2 ml.

6.2.6 Plastic Storage Containers. Air-tight containers to store silica gel.

6.2.7 Funnel and Rubber Policeman. To aid in transfer of silica gel to container; not necessary if silica gel is weighed in the field.

6.2.8 Funnel. Glass or polyethylene, to aid in sample recovery.

6.3 Sample Analysis. The following equipment is required for sample analysis:

6.3.1 Glass Weighing Dishes.

6.3.2 Desiccator.

6.3.3 Analytical Balance. To measure to within 0.1 mg.

6.3.4 Balance. To measure to within 0.5 g.

6.3.5 Beakers. 250 ml.

6.3.6 Hygrometer. To measure the relative humidity of the laboratory environment.

6.3.7 Temperature Sensor. To measure the temperature of the laboratory environment.

7.0 Reagents and Standards

7.1 Sample Collection. The following reagents are required for sample collection:

7.1.1 Filters. Glass fiber filters, without organic binder, exhibiting at least 99.95 percent efficiency (<0.05 percent penetration) on 0.3 micron dioctyl phthalate smoke particles. The filter efficiency test shall be conducted in accordance with ASTM Method D 2986–71, 78, or 95a (incorporated by reference—see § 60.17). Test data from the supplier's quality control program are sufficient for this purpose. In sources containing SO_2 or SO_3, the filter material must be of a type that is unreactive to SO_2 or SO_3. Reference 10 in Section 17.0 may be used to select the appropriate filter.

7.1.2 Silica Gel. Indicating type, 6 to 16 mesh. If previously used, dry at 175 °C (350 °F) for 2 hours. New silica gel may be used as received. Alternatively, other types of desiccants (equivalent or better) may be used, subject to the approval of the Administrator.

7.1.3 Water. When analysis of the material caught in the impingers is required, deionized distilled water (to conform to ASTM D 1193–77 or 91 Type 3 (incorporated by reference—see § 60.17)) shall be used. Run blanks prior to field use to eliminate a high blank on test samples.

7.1.4 Crushed Ice.

7.1.5 Stopcock Grease. Acetone-insoluble, heat-stable silicone grease. This is not necessary if screw-on connectors with Teflon sleeves, or similar, are used. Alternatively, other types of stopcock grease may be used, subject to the approval of the Administrator.

7.2 Sample Recovery. Acetone, reagent grade, ≤0.001 percent residue, in glass bottles, is required. Acetone from metal containers generally has a high

residue blank and should not be used. Sometimes, suppliers transfer acetone to glass bottles from metal containers; thus, acetone blanks shall be run prior to field use and only acetone with low blank values (≤0.001 percent) shall be used. In no case shall a blank value of greater than 0.001 percent of the weight of acetone used be subtracted from the sample weight.

7.3 Sample Analysis. The following reagents are required for sample analysis:

7.3.1 Acetone. Same as in Section 7.2.

7.3.2 Desiccant. Anhydrous calcium sulfate, indicating type. Alternatively, other types of desiccants may be used, subject to the approval of the Administrator.

8.0 Sample Collection, Preservation, Storage, and Transport

8.1 Pretest Preparation. It is suggested that sampling equipment be maintained according to the procedures described in APTD–0576.

8.1.1 Place 200 to 300 g of silica gel in each of several air-tight containers. Weigh each container, including silica gel, to the nearest 0.5 g, and record this weight. As an alternative, the silica gel need not be preweighed, but may be weighed directly in its impinger or sampling holder just prior to train assembly.

8.1.2 Check filters visually against light for irregularities, flaws, or pinhole leaks. Label filters of the proper diameter on the back side near the edge using numbering machine ink. As an alternative, label the shipping containers (glass or polyethylene petri dishes), and keep each filter in its identified container at all times except during sampling.

8.1.3 Desiccate the filters at 20 ± 5.6 °C (68 ± 10 °F) and ambient pressure for at least 24 hours. Weigh each filter (or filter and shipping container) at intervals of at least 6 hours to a constant weight (*i.e.*, ≤0.5 mg change from previous weighing). Record results to the nearest 0.1 mg. During each weighing, the period for which the filter is exposed to the laboratory atmosphere shall be less than 2 minutes. Alternatively (unless otherwise specified by the Administrator), the filters may be oven dried at 105 °C (220 °F) for 2 to 3 hours, desiccated for 2 hours, and weighed. Procedures other than those described, which account for relative humidity effects, may be used, subject to the approval of the Administrator.

8.2 Preliminary Determinations.

8.2.1 Select the sampling site and the minimum number of sampling points according to Method 1 or as specified by the Administrator. Determine the stack pressure, temperature, and the range of velocity heads using Method 2; it is recommended that a leak check of the pitot lines (see Method 2, Section 8.1) be performed. Determine the moisture content using Approximation Method 4 or its alternatives for the purpose of making isokinetic sampling rate settings. Determine the stack gas dry molecular weight, as described in Method 2, Section 8.6; if integrated Method 3 sampling is used for molecular weight determination, the integrated bag sample shall be taken simultaneously with, and for the same total length of time as, the particulate sample run.

8.2.2 Select a nozzle size based on the range of velocity heads, such that it is not necessary to change the nozzle size in order to maintain isokinetic sampling rates. During the run, do not change the nozzle size. Ensure that the proper differential pressure gauge is chosen for the range of velocity heads encountered (see Section 8.3 of Method 2).

8.2.3 Select a suitable probe liner and probe length such that all traverse points can be sampled. For large stacks, consider sampling from opposite sides of the stack to reduce the required probe length.

8.2.4 Select a total sampling time greater than or equal to the minimum total sampling time specified in the test procedures for the specific industry such that (l) the sampling time per point is not less than 2 minutes (or some greater time interval as specified by the Administrator), and (2) the sample volume taken (corrected to standard conditions) will exceed the required minimum total gas sample volume. The latter is based on an approximate average sampling rate.

8.2.5 The sampling time at each point shall be the same. It is recommended that the number of minutes sampled at each point be an integer or an integer plus one-half minute, in order to avoid timekeeping errors.

8.2.6 In some circumstances (*e.g.*, batch cycles) it may be necessary to sample for shorter times at the traverse points and to obtain smaller gas sample volumes. In these cases, the Administrator's approval must first be obtained.

8.3 Preparation of Sampling Train.

8.3.1 During preparation and assembly of the sampling train, keep all openings where contamination can occur covered until just prior to assembly or until sampling is about to begin. Place 100 ml of water in each of the first two impingers, leave the third impinger empty, and transfer approximately 200 to 300 g of preweighed silica gel from its container to the fourth impinger. More silica gel may be used, but care should be taken to ensure that it is not entrained and carried out from the impinger during sampling. Place the container in a clean place for later use in the sample recovery. Alternatively, the weight of the silica gel plus impinger may be determined to the nearest 0.5 g and recorded.

8.3.2 Using a tweezer or clean disposable surgical gloves, place a labeled (identified) and weighed filter in the filter holder. Be sure that the filter is properly centered and the gasket properly placed so as to prevent the sample gas stream from circumventing the filter. Check the filter for tears after assembly is completed.

8.3.3 When glass probe liners are used, install the selected nozzle using a Viton A O-ring when stack temperatures are less than 260 °C (500 °F) or a heat-resistant string gasket when temperatures are higher. See APTD–0576 for details. Other connecting systems using either 316 stainless steel or Teflon ferrules may be used. When metal liners are used, install the nozzle as discussed above or by a leak-free direct mechanical connection. Mark the probe with heat resistant tape or by some other method to denote the proper distance into the stack or duct for each sampling point.

8.3.4 Set up the train as shown in Figure 5–1, using (if necessary) a very light coat of silicone grease on all ground glass joints, greasing only the outer portion (see APTD–0576) to avoid the possibility of contamination by the silicone grease. Subject to the approval of the Administrator, a glass cyclone may be used between the probe and filter holder when the total particulate catch is expected to exceed 100 mg or when water droplets are present in the stack gas.

8.3.5 Place crushed ice around the impingers.

8.4 Leak-Check Procedures.

8.4.1 Leak Check of Metering System Shown in Figure 5–1. That portion of the sampling train from the pump to the orifice meter should be leak-checked prior to initial use and after each shipment. Leakage after the pump will result in less volume being recorded than is actually sampled. The following procedure is suggested (see Figure 5–2): Close the main valve on the meter box. Insert a one-hole rubber stopper with rubber tubing attached into the orifice exhaust pipe. Disconnect and vent the

low side of the orifice manometer. Close off the low side orifice tap. Pressurize the system to 13 to 18 cm (5 to 7 in.) water column by blowing into the rubber tubing. Pinch off the tubing, and observe the manometer for one minute. A loss of pressure on the manometer indicates a leak in the meter box; leaks, if present, must be corrected.

8.4.2 Pretest Leak Check. A pretest leak check of the sampling train is recommended, but not required. If the pretest leak check is conducted, the following procedure should be used.

8.4.2.1 After the sampling train has been assembled, turn on and set the filter and probe heating systems to the desired operating temperatures. Allow time for the temperatures to stabilize. If a Viton A O-ring or other leak-free connection is used in assembling the probe nozzle to the probe liner, leak-check the train at the sampling site by plugging the nozzle and pulling a 380 mm (15 in.) Hg vacuum.

Note: A lower vacuum may be used, provided that it is not exceeded during the test.

8.4.2.2 If a heat-resistant string is used, do not connect the probe to the train during the leak check. Instead, leak-check the train by first plugging the inlet to the filter holder (cyclone, if applicable) and pulling a 380 mm (15 in.) Hg vacuum (see **Note** in Section 8.4.2.1). Then connect the probe to the train, and leak-check at approximately 25 mm (1 in.) Hg vacuum; alternatively, the probe may be leak-checked with the rest of the sampling train, in one step, at 380 mm (15 in.) Hg vacuum. Leakage rates in excess of 4 percent of the average sampling rate or 0.00057 m^3/min (0.020 cfm), whichever is less, are unacceptable.

8.4.2.3 The following leak-check instructions for the sampling train described in APTD–0576 and APTD–0581 may be helpful. Start the pump with the bypass valve fully open and the coarse adjust valve completely closed. Partially open the coarse adjust valve, and slowly close the bypass valve until the desired vacuum is reached. Do not reverse the direction of the bypass valve, as this will cause water to back up into the filter holder. If the desired vacuum is exceeded, either leak-check at this higher vacuum, or end the leak check and start over.

8.4.2.4 When the leak check is completed, first slowly remove the plug from the inlet to the probe, filter holder, or cyclone (if applicable), and immediately turn off the vacuum pump. This prevents the water in the impingers from being forced backward into the filter holder and the silica gel from being entrained backward into the third impinger.

8.4.3 Leak Checks During Sample Run. If, during the sampling run, a component (*e.g.*, filter assembly or impinger) change becomes necessary, a leak check shall be conducted immediately before the change is made. The leak check shall be done according to the procedure outlined in Section 8.4.2 above, except that it shall be done at a vacuum equal to or greater than the maximum value recorded up to that point in the test. If the leakage rate is found to be no greater than 0.00057 m^3/min (0.020 cfm) or 4 percent of the average sampling rate (whichever is less), the results are acceptable, and no correction will need to be applied to the total volume of dry gas metered; if, however, a higher leakage rate is obtained, either record the leakage rate and plan to correct the sample volume as shown in Section 12.3 of this method, or void the sample run.

Note: Immediately after component changes, leak checks are optional. If such leak checks are done, the procedure outlined in Section 8.4.2 above should be used.

8.4.4 Post-Test Leak Check. A leak check of the sampling train is mandatory at the conclusion of each sampling run. The leak check shall be performed in accordance with the procedures outlined in Section 8.4.2, except that it shall be conducted at a vacuum equal to or greater than the maximum value reached during the sampling run. If the leakage rate is found to be no greater than 0.00057 m^3 min (0.020 cfm) or 4 percent of the average sampling rate (whichever is less), the results are acceptable, and no correction need be applied to the total volume of dry gas metered. If, however, a higher leakage rate is obtained, either record the leakage rate and correct the sample volume as shown in Section 12.3 of this method, or void the sampling run.

8.5 Sampling Train Operation. During the sampling run, maintain an isokinetic sampling rate (within 10 percent of true isokinetic unless otherwise specified by the Administrator) and a temperature around the filter of 120 ± 14 °C (248 ± 25 °F), or such other temperature as specified by an applicable subpart of the standards or approved by the Administrator.

8.5.1 For each run, record the data required on a data sheet such as the one shown in Figure 5–3. Be sure to record the initial DGM reading. Record the DGM readings at the beginning and end of each sampling time increment, when changes in flow rates are made, before and after each leak check, and when sampling is halted. Take other readings indicated by Figure 5–3 at least once at each sample point during each time increment and additional readings when significant changes (20 percent variation in velocity head readings) necessitate additional adjustments in flow rate. Level and zero the manometer. Because the manometer level and zero may drift due to vibrations and temperature changes, make periodic checks during the traverse.

8.5.2 Clean the portholes prior to the test run to minimize the chance of collecting deposited material. To begin sampling, verify that the filter and probe heating systems are up to temperature, remove the nozzle cap, verify that the pitot tube and probe are properly positioned. Position the nozzle at the first traverse point with the tip pointing directly into the gas stream. Immediately start the pump, and adjust the flow to isokinetic conditions. Nomographs are available which aid in the rapid adjustment of the isokinetic sampling rate without excessive computations. These nomographs are designed for use when the Type S pitot tube coefficient (C_p) is 0.85 ± 0.02, and the stack gas equivalent density [dry molecular weight (M_d)] is equal to 29 ± 4. APTD–0576 details the procedure for using the nomographs. If C_p and M_d are outside the above stated ranges, do not use the nomographs unless appropriate steps (see Reference 7 in Section 17.0) are taken to compensate for the deviations.

8.5.3 When the stack is under significant negative pressure (*i.e.*, height of impinger stem), take care to close the coarse adjust valve before inserting the probe into the stack to prevent water from backing into the filter holder. If necessary, the pump may be turned on with the coarse adjust valve closed.

8.5.4 When the probe is in position, block off the openings around the probe and porthole to prevent unrepresentative dilution of the gas stream.

8.5.5 Traverse the stack cross-section, as required by Method 1 or as specified by the Administrator, being careful not to bump the probe nozzle into the stack walls when sampling near the walls or when removing or inserting the probe through the portholes; this minimizes the chance of extracting deposited material.

8.5.6 During the test run, make periodic adjustments to keep the temperature around the filter holder at the proper level; add more ice and, if necessary, salt to maintain a temperature of less than 20 °C (68 °F) at the condenser/silica gel outlet. Also,

periodically check the level and zero of the manometer.

8.5.7 If the pressure drop across the filter becomes too high, making isokinetic sampling difficult to maintain, the filter may be replaced in the midst of the sample run. It is recommended that another complete filter assembly be used rather than attempting to change the filter itself. Before a new filter assembly is installed, conduct a leak check (see Section 8.4.3). The total PM weight shall include the summation of the filter assembly catches.

8.5.8 A single train shall be used for the entire sample run, except in cases where simultaneous sampling is required in two or more separate ducts or at two or more different locations within the same duct, or in cases where equipment failure necessitates a change of trains. In all other situations, the use of two or more trains will be subject to the approval of the Administrator.

Note: When two or more trains are used, separate analyses of the front-half and (if applicable) impinger catches from each train shall be performed, unless identical nozzle sizes were used on all trains, in which case, the front-half catches from the individual trains may be combined (as may the impinger catches) and one analysis of front-half catch and one analysis of impinger catch may be performed. Consult with the Administrator for details concerning the calculation of results when two or more trains are used.

8.5.9 At the end of the sample run, close the coarse adjust valve, remove the probe and nozzle from the stack, turn off the pump, record the final DGM meter reading, and conduct a post-test leak check, as outlined in Section 8.4.4. Also, leak-check the pitot lines as described in Method 2, Section 8.1. The lines must pass this leak check, in order to validate the velocity head data.

8.6 Calculation of Percent Isokinetic. Calculate percent isokinetic (see Calculations, Section 12.11) to determine whether the run was valid or another test run should be made. If there was difficulty in maintaining isokinetic rates because of source conditions, consult with the Administrator for possible variance on the isokinetic rates.

8.7 Sample Recovery.

8.7.1 Proper cleanup procedure begins as soon as the probe is removed from the stack at the end of the sampling period. Allow the probe to cool.

8.7.2 When the probe can be safely handled, wipe off all external PM near the tip of the probe nozzle, and place a cap over it to prevent losing or gaining PM. Do not cap off the probe tip tightly while the sampling train is cooling down. This would create a vacuum in the filter holder, thereby drawing water from the impingers into the filter holder.

8.7.3 Before moving the sample train to the cleanup site, remove the probe from the sample train, wipe off the silicone grease, and cap the open outlet of the probe. Be careful not to lose any condensate that might be present. Wipe off the silicone grease from the filter inlet where the probe was fastened, and cap it. Remove the umbilical cord from the last impinger, and cap the impinger. If a flexible line is used between the first impinger or condenser and the filter holder, disconnect the line at the filter holder, and let any condensed water or liquid drain into the impingers or condenser. After wiping off the silicone grease, cap off the filter holder outlet and impinger inlet. Either ground-glass stoppers, plastic caps, or serum caps may be used to close these openings.

8.7.4 Transfer the probe and filter-impinger assembly to the cleanup area. This area should be clean and protected from the wind so that the chances of contaminating or losing the sample will be minimized.

8.7.5 Save a portion of the acetone used for cleanup as a blank. Take 200 ml of this acetone directly from the wash bottle being used, and place it in a glass sample container labeled ''acetone blank.''

8.7.6 Inspect the train prior to and during disassembly, and note any abnormal conditions. Treat the samples as follows:

8.7.6.1 Container No. 1. Carefully remove the filter from the filter holder, and place it in its identified petri dish container. Use a pair of tweezers and/or clean disposable surgical gloves to handle the filter. If it is necessary to fold the filter, do so such that the PM cake is inside the fold. Using a dry Nylon bristle brush and/or a sharp-edged blade, carefully transfer to the petri dish any PM and/or filter fibers that adhere to the filter holder gasket. Seal the container.

8.7.6.2 Container No. 2. Taking care to see that dust on the outside of the probe or other exterior surfaces does not get into the sample, quantitatively recover PM or any condensate from the probe nozzle, probe fitting, probe liner, and front half of the filter holder by washing these components with acetone and placing the wash in a glass container. Deionized distilled water may be used instead of acetone when approved by the Administrator and shall be used when specified by the Administrator. In these cases, save a water blank, and follow the Administrator's directions on analysis. Perform the acetone rinse as follows:

8.7.6.2.1 Carefully remove the probe nozzle. Clean the inside surface by rinsing with acetone from a wash bottle and brushing with a Nylon bristle brush. Brush until the acetone rinse shows no visible particles, after which make a final rinse of the inside surface with acetone.

8.7.6.2.2 Brush and rinse the inside parts of the fitting with acetone in a similar way until no visible particles remain.

8.7.6.2.3 Rinse the probe liner with acetone by tilting and rotating the probe while squirting acetone into its upper end so that all inside surfaces will be wetted with acetone. Let the acetone drain from the lower end into the sample container. A funnel (glass or polyethylene) may be used to aid in transferring liquid washes to the container. Follow the acetone rinse with a probe brush. Hold the probe in an inclined position, squirt acetone into the upper end as the probe brush is being pushed with a twisting action through the probe; hold a sample container underneath the lower end of the probe, and catch any acetone and particulate matter that is brushed from the probe. Run the brush through the probe three times or more until no visible PM is carried out with the acetone or until none remains in the probe liner on visual inspection. With stainless steel or other metal probes, run the brush through in the above prescribed manner at least six times since metal probes have small crevices in which particulate matter can be entrapped. Rinse the brush with acetone, and quantitatively collect these washings in the sample container. After the brushing, make a final acetone rinse of the probe.

8.7.6.2.4 It is recommended that two people clean the probe to minimize sample losses. Between sampling runs, keep brushes clean and protected from contamination.

8.7.6.2.5 After ensuring that all joints have been wiped clean of silicone grease, clean the inside of the front half of the filter holder by rubbing the surfaces with a Nylon bristle brush and rinsing with acetone. Rinse each surface three times or more if needed to remove visible particulate. Make a final rinse of the brush and filter holder. Carefully rinse out the glass cyclone, also (if applicable). After all acetone washings and particulate matter have been collected in the sample container, tighten the lid on the sample container so that acetone will not leak out when it is shipped to the laboratory. Mark the height of the fluid level to allow determination of whether leakage

occurred during transport. Label the container to identify clearly its contents.

8.7.6.3 Container No. 3. Note the color of the indicating silica gel to determine whether it has been completely spent, and make a notation of its condition. Transfer the silica gel from the fourth impinger to its original container, and seal. A funnel may make it easier to pour the silica gel without spilling. A rubber policeman may be used as an aid in removing the silica gel from the impinger. It is not necessary to remove the small amount of dust particles that may adhere to the impinger wall and are difficult to remove. Since the gain in weight is to be used for moisture calculations, do not use any water or other liquids to transfer the silica gel. If a balance is available in the field, follow the procedure for Container No. 3 in Section 11.2.3.

8.7.6.4 Impinger Water. Treat the impingers as follows: Make a notation of any color or film in the liquid catch. Measure the liquid that is in the first three impingers to within 1 ml by using a graduated cylinder or by weighing it to within 0.5 g by using a balance. Record the volume or weight of liquid present. This information is required to calculate the moisture content of the effluent gas. Discard the liquid after measuring and recording the volume or weight, unless analysis of the impinger catch is required (see NOTE, Section 6.1.1.8). If a different type of condenser is used, measure the amount of moisture condensed either volumetrically or gravimetrically.

8.8 Sample Transport. Whenever possible, containers should be shipped in such a way that they remain upright at all times.

9.0 Quality Control

9.1 Miscellaneous Quality Control Measures.

Section	Quality control measure	Effect
8.4, 10.1–10.6	Sampling equipment leak check and calibration.	Ensures accurate measurement of stack gas flow rate, sample volume.

9.2 Volume Metering System Checks. The following procedures are suggested to check the volume metering system calibration values at the field test site prior to sample collection. These procedures are optional.

9.2.1 Meter Orifice Check. Using the calibration data obtained during the calibration procedure described in Section 10.3, determine the ΔH@ for the metering system orifice. The ΔH@ is the orifice pressure differential in units of in. H_2O that correlates to 0.75 cfm of air at 528 °R and 29.92 in. Hg. The ΔH@ is calculated as follows:

$$\Delta H@ = 0.0319\ \Delta H \frac{T_M \theta^2}{P_{bar} Y^2 V_m^2}$$

Where:

ΔH = Average pressure differential across the orifice meter, in. H_2O.

T_m = Absolute average DGM temperature, °R.

P_{bar} = Barometric pressure, in. Hg.

θ = Total sampling time, min.

Y = DGM calibration factor, dimensionless.

V_m = Volume of gas sample as measured by DGM, dcf.

0.0319 = (0.0567 in. Hg/°R) (0.75 cfm)^2

9.2.1.1 Before beginning the field test (a set of three runs usually constitutes a field test), operate the metering system (*i.e.*, pump, volume meter, and orifice) at the ΔH@ pressure differential for 10 minutes. Record the volume collected, the DGM temperature, and the barometric pressure. Calculate a DGM calibration check value, Y_c, as follows:

$$Y_c = \frac{10}{V_m}\left[\frac{0.0319\ T_m}{P_{bar}}\right]^{\frac{1}{2}}$$

where:

Y_c = DGM calibration check value, dimensionless.

10 = Run time, min.

9.2.1.2 Compare the Y_c value with the dry gas meter calibration factor Y to determine that: $0.97Y < Y_c < 1.03Y$. If the Y_c value is not within this range, the volume metering system should be investigated before beginning the test.

9.2.2 Calibrated Critical Orifice. A critical orifice, calibrated against a wet test meter or spirometer and designed to be inserted at the inlet of the sampling meter box, may be used as a check by following the procedure of Section 16.2.

10.0 Calibration and Standardization

Note: Maintain a laboratory log of all calibrations.

10.1 Probe Nozzle. Probe nozzles shall be calibrated before their initial use in the field. Using a micrometer, measure the ID of the nozzle to the nearest 0.025 mm (0.001 in.). Make three separate measurements using different diameters each time, and obtain the average of the measurements. The difference between the high and low numbers shall not exceed 0.1 mm (0.004 in.). When nozzles become nicked, dented, or corroded, they shall be reshaped, sharpened, and recalibrated before use. Each nozzle shall be permanently and uniquely identified.

10.2 Pitot Tube Assembly. The Type S pitot tube assembly shall be calibrated according to the procedure outlined in Section 10.1 of Method 2.

10.3 Metering System.

10.3.1 Calibration Prior to Use. Before its initial use in the field, the metering system shall be calibrated as follows: Connect the metering system inlet to the outlet of a wet test meter that is accurate to within 1 percent. Refer to Figure 5–4. The wet test meter should have a capacity of 30 liters/rev (1 ft^3/rev). A spirometer of 400 liters (14 ft^3) or more capacity, or equivalent, may be used for this calibration, although a wet test meter is usually more practical. The wet test meter should be periodically calibrated with a spirometer or a liquid displacement meter to ensure the accuracy of the wet test meter. Spirometers or wet test meters of other sizes may be used, provided that the specified accuracies of the procedure are maintained. Run the metering system pump for about 15 minutes with the orifice manometer indicating a median reading as expected in field use to allow the pump to warm up and to permit the interior surface of the wet test meter to be thoroughly wetted. Then, at each of a minimum of three orifice manometer settings, pass an exact quantity of gas through the wet test meter and note the gas volume indicated by the DGM. Also note the barometric pressure and the temperatures of the wet test meter, the inlet of the DGM, and the outlet of the DGM. Select the highest and lowest orifice settings to bracket the expected field operating range of the orifice. Use a minimum volume of 0.14 m^3 (5 ft^3) at all orifice settings. Record all the data on a form similar to Figure 5–5 and calculate Y, the DGM calibration factor, and $\Delta H_@$, the orifice calibration factor, at each orifice setting as shown on Figure 5–5. Allowable tolerances for

individual Y and $\Delta H_@$ values are given in Figure 5–5. Use the average of the Y values in the calculations in Section 12.0.

10.3.1.1 Before calibrating the metering system, it is suggested that a leak check be conducted. For metering systems having diaphragm pumps, the normal leak-check procedure will not detect leakages within the pump. For these cases the following leak-check procedure is suggested: make a 10-minute calibration run at 0.00057 m^3/min (0.020 cfm). At the end of the run, take the difference of the measured wet test meter and DGM volumes. Divide the difference by 10 to get the leak rate. The leak rate should not exceed 0.00057 m^3/min (0.020 cfm).

10.3.2 Calibration After Use. After each field use, the calibration of the metering system shall be checked by performing three calibration runs at a single, intermediate orifice setting (based on the previous field test), with the vacuum set at the maximum value reached during the test series. To adjust the vacuum, insert a valve between the wet test meter and the inlet of the metering system. Calculate the average value of the DGM calibration factor. If the value has changed by more than 5 percent, recalibrate the meter over the full range of orifice settings, as detailed in Section 10.3.1.

Note: Alternative procedures (*e.g.,* rechecking the orifice meter coefficient) may be used, subject to the approval of the Administrator.

10.3.3 Acceptable Variation in Calibration. If the DGM coefficient values obtained before and after a test series differ by more than 5 percent, the test series shall either be voided, or calculations for the test series shall be performed using whichever meter coefficient value (*i.e.,* before or after) gives the lower value of total sample volume.

10.4 Probe Heater Calibration. Use a heat source to generate air heated to selected temperatures that approximate those expected to occur in the sources to be sampled. Pass this air through the probe at a typical sample flow rate while measuring the probe inlet and outlet temperatures at various probe heater settings. For each air temperature generated, construct a graph of probe heating system setting versus probe outlet temperature. The procedure outlined in APTD–0576 can also be used. Probes constructed according to APTD–0581 need not be calibrated if the calibration curves in APTD–0576 are used. Also, probes with outlet temperature monitoring capabilities do not require calibration.

Note: The probe heating system shall be calibrated before its initial use in the field.

10.5 Temperature Sensors. Use the procedure in Section 10.3 of Method 2 to calibrate in-stack temperature sensors. Dial thermometers, such as are used for the DGM and condenser outlet, shall be calibrated against mercury-in-glass thermometers.

10.6 Barometer. Calibrate against a mercury barometer.

11.0 Analytical Procedure

11.1 Record the data required on a sheet such as the one shown in Figure 5–6.

11.2 Handle each sample container as follows:

11.2.1 Container No. 1. Leave the contents in the shipping container or transfer the filter and any loose PM from the sample container to a tared glass weighing dish. Desiccate for 24 hours in a desiccator containing anhydrous calcium sulfate. Weigh to a constant weight, and report the results to the nearest 0.1 mg. For the purposes of this section, the term ''constant weight'' means a difference of no more than 0.5 mg or 1 percent of total weight less tare weight, whichever is greater, between two consecutive weighings, with no less than 6 hours of desiccation time between weighings. Alternatively, the sample may be oven dried at 104 °C (220 °F) for 2 to 3 hours, cooled in the desiccator, and weighed to a constant weight, unless otherwise specified by the Administrator. The sample may be oven dried at 104 °C (220 °F) for 2 to 3 hours. Once the sample has cooled, weigh the sample, and use this weight as a final weight.

11.2.2 Container No. 2. Note the level of liquid in the container, and confirm on the analysis sheet whether leakage occurred during transport. If a noticeable amount of leakage has occurred, either void the sample or use methods, subject to the approval of the Administrator, to correct the final results. Measure the liquid in this container either volumetrically to ±1 ml or gravimetrically to ±0.5 g. Transfer the contents to a tared 250 ml beaker, and evaporate to dryness at ambient temperature and pressure. Desiccate for 24 hours, and weigh to a constant weight. Report the results to the nearest 0.1 mg.

11.2.3 Container No. 3. Weigh the spent silica gel (or silica gel plus impinger) to the nearest 0.5 g using a balance. This step may be conducted in the field.

11.2.4 Acetone Blank Container. Measure the acetone in this container either volumetrically or gravimetrically. Transfer the acetone to a tared 250 ml beaker, and evaporate to dryness at ambient temperature and pressure. Desiccate for 24 hours, and weigh to a constant weight. Report the results to the nearest 0.1 mg.

Note: The contents of Container No. 2 as well as the acetone blank container may be evaporated at temperatures higher than ambient. If evaporation is done at an elevated temperature, the temperature must be below the boiling point of the solvent; also, to prevent ''bumping,'' the evaporation process must be closely supervised, and the contents of the beaker must be swirled occasionally to maintain an even temperature. Use extreme care, as acetone is highly flammable and has a low flash point.

12.0 Data Analysis and Calculations

Carry out calculations, retaining at least one extra significant figure beyond that of the acquired data. Round off figures after the final calculation. Other forms of the equations may be used, provided that they give equivalent results.

12.1 Nomenclature.

A_n = Cross-sectional area of nozzle, m^2 (ft^2).

B_{ws} = Water vapor in the gas stream, proportion by volume.

C_a = Acetone blank residue concentration, mg/mg.

c_s = Concentration of particulate matter in stack gas, dry basis, corrected to standard conditions, g/dscm (gr/dscf).

I = Percent of isokinetic sampling.

L_1 = Individual leakage rate observed during the leak-check conducted prior to the first component change, m^3/min (ft^3/min)

L_a = Maximum acceptable leakage rate for either a pretest leak-check or for a leak-check following a component change; equal to 0.00057 m^3/min (0.020 cfm) or 4 percent of the average sampling rate, whichever is less.

L_i = Individual leakage rate observed during the leak-check conducted prior to the ''i^{th}'' component change (i = 1, 2, 3 . . . n), m^3/min (cfm).

L_p = Leakage rate observed during the post-test leak-check, m^3/min (cfm).

m_a = Mass of residue of acetone after evaporation, mg.

m_n = Total amount of particulate matter collected, mg.

M_w = Molecular weight of water, 18.0 g/g-mole (18.0 lb/lb-mole).

P_{bar} = Barometric pressure at the sampling site, mm Hg (in. Hg).

P_s = Absolute stack gas pressure, mm Hg (in. Hg).

P_{std} = Standard absolute pressure, 760 mm Hg (29.92 in. Hg).

R = Ideal gas constant, 0.06236 ((mm Hg)(m^3))/((K)(g-mole)) {21.85 ((in. Hg) (ft^3))/((°R) (lb-mole))}.

T_m = Absolute average DGM temperature (see Figure 5–3), K (°R).
T_s = Absolute average stack gas temperature (see Figure 5–3), K (°R).
T_{std} = Standard absolute temperature, 293 K (528 °R).
V_a = Volume of acetone blank, ml.
V_{aw} = Volume of acetone used in wash, ml.
V_{1c} = Total volume of liquid collected in impingers and silica gel (see Figure 5–6), ml.
V_m = Volume of gas sample as measured by dry gas meter, dcm (dcf).
$V_{m(std)}$ = Volume of gas sample measured by the dry gas meter, corrected to standard conditions, dscm (dscf).
$V_{w(std)}$ = Volume of water vapor in the gas sample, corrected to standard conditions, scm (scf).
V_s = Stack gas velocity, calculated by Method 2, Equation 2–7, using data obtained from Method 5, m/sec (ft/sec).
W_a = Weight of residue in acetone wash, mg.
Y = Dry gas meter calibration factor.
ΔH = Average pressure differential across the orifice meter (see Figure 5–4), mm H_2O (in. H_2O).
ρ_a = Density of acetone, mg/ml (see label on bottle).
ρ_w = Density of water, 0.9982 g/ml.(0.002201 lb/ml).
θ = Total sampling time, min.
θ_1 = Sampling time interval, from the beginning of a run until the first component change, min.
θ_i = Sampling time interval, between two successive component changes, beginning with the interval between the first and second changes, min.
θ_p = Sampling time interval, from the final (n^{th}) component change until the end of the sampling run, min.
13.6 = Specific gravity of mercury.
60 = Sec/min.
100 = Conversion to percent.

12.2 Average Dry Gas Meter Temperature and Average Orifice Pressure Drop. See data sheet (Figure 5–3).

12.3 Dry Gas Volume. Correct the sample volume measured by the dry gas meter to standard conditions (20 °C, 760 mm Hg or 68 °F, 29.92 in. Hg) by using Equation 5–1.

$$V_{m(std)} = V_m Y \frac{T_{std}\left(P_{bar} + \frac{\Delta H}{13.6}\right)}{T_m P_{std}} \qquad \text{Eq. 5-1}$$

$$= K_1 V_m Y \frac{P_{bar} + \left(\frac{\Delta H}{13.6}\right)}{T_m}$$

Where:

K_1 = 0.3858 °K/mm Hg for metric units, = 17.64 °R/in. Hg for English units.

Note: Equation 5–1 can be used as written unless the leakage rate observed during any of the mandatory leak checks (*i.e.*, the post-test leak check or leak checks conducted prior to component changes) exceeds L_a. If L_p or L_i exceeds L_a, Equation 5–1 must be modified as follows:

(a) Case I. No component changes made during sampling run. In this case, replace V_m in Equation 5–1 with the expression:

$$\left(V_m - \left(L_p - L_a\right)\theta\right)$$

(b) Case II. One or more component changes made during the sampling run. In this case, replace V_m in Equation 5–1 by the expression:

$$\left[V_m - \left(L_1 - L_a\right)\theta_1 - \sum_{i=2}^{n}\left(L_1 - L_a\right)\theta_i - \left(L_p - L_a\right)\theta_p\right]$$

and substitute only for those leakage rates (L_i or L_p) which exceed L_a.

12.4 Volume of Water Vapor Condensed.

$$V_{w(std)} = V_{1c} \frac{\rho_w R T_{std}}{M_w P_{std}} \qquad \text{Eq. 5-2}$$

$$= K_2 V_{1c}$$

Where:

K_2 = 0.001333 m^3/ml for metric units, = 0.04706 ft^3/ml for English units.

12.5 Moisture Content.

$$B_{ws} = \frac{V_{w(std)}}{V_{m(std)} + V_{w(std)}} \qquad \text{Eq. 5-3}$$

Note: In saturated or water droplet-laden gas streams, two calculations of the moisture content of the stack gas shall be made, one from the impinger analysis (Equation 5–3), and a second from the assumption of saturated conditions. The lower of the two values of B_{ws} shall be considered correct. The procedure for determining the moisture content based upon the assumption of saturated conditions is given in Section 4.0 of Method 4. For the purposes of this method, the average stack gas temperature from Figure 5–3 may be used to make this determination, provided that the accuracy of the in-stack temperature sensor is ± 1°C (2°F).

12.6 Acetone Blank Concentration.

$$C_a = \frac{m_a}{V_a \rho_a} \qquad \text{Eq. 5-4}$$

12.7 Acetone Wash Blank.

$$W_a = C_a V_{aw} \rho_a \qquad \text{Eq. 5-5}$$

12.8 Total Particulate Weight. Determine the total particulate matter

catch from the sum of the weights obtained from Containers 1 and 2 less the acetone blank (see Figure 5–6).

Note: In no case shall a blank value of greater than 0.001 percent of the weight of acetone used be subtracted from the sample weight. Refer to Section 8.5.8 to assist in calculation of results involving two or more filter assemblies or two or more sampling trains.

12.9 Particulate Concentration.

$$C_s = \frac{K_3 m_n}{V_{m(std)}} \qquad \text{Eq. 5-6}$$

Where:

K_3 = 0.001 g/mg for metric units.
= 0.0154 gr/mg for English units.

12.10 Conversion Factors:

From	To	Multiply by
ft^3	m^3	0.02832
gr	mg	64.80004
gr/ft^3	mg/m^3	2288.4
mg	g	0.001
gr	lb	1.429×10^{-4}

12.11 Isokinetic Variation.

12.11.1 Calculation from Raw Data.

$$I = \frac{100\, T_s \left[K_4 V_{1c} + \frac{(V_m Y)}{T_m}\left(P_{bar} + \frac{\Delta H}{13.6}\right)\right]}{60\, \theta v_s P_s A_n} \qquad \text{Eq. 5-7}$$

Where:

K_4 = 0.003454 ((mm Hg)(m^3))/((ml)(°K)) for metric units,
= 0.002669 ((in. Hg)(ft^3))/((ml)(°R)) for English units.

12.11.2 Calculation from Intermediate Values.

$$I = \frac{T_s V_{m(std)} P_{std} 100}{T_{std} v_s \theta A_n P_s 60 (1 - B_{ws})} \qquad \text{Eq. 5-8}$$

$$= K_5 \frac{T_s V_{m(std)}}{P_s v_s A_n \theta (1 - B_{ws})}$$

Where:

K_5 = 4.320 for metric units,
= 0.09450 for English units.

12.11.3 Acceptable Results. If 90 percent ≤ I ≤ 110 percent, the results are acceptable. If the PM results are low in comparison to the standard, and ''I'' is over 110 percent or less than 90 percent, the Administrator may opt to accept the results. Reference 4 in Section 17.0 may be used to make acceptability judgments. If ''I'' is judged to be unacceptable, reject the results, and repeat the sampling run.

12.12 Stack Gas Velocity and Volumetric Flow Rate. Calculate the average stack gas velocity and volumetric flow rate, if needed, using data obtained in this method and the equations in Sections 12.3 and 12.4 of Method 2.

13.0 Method Performance. [Reserved]

14.0 Pollution Prevention. [Reserved]

15.0 Waste Management. [Reserved]

16.0 Alternative Procedures

16.1 Dry Gas Meter as a Calibration Standard. A DGM may be used as a calibration standard for volume measurements in place of the wet test meter specified in Section 10.3, provided that it is calibrated initially and recalibrated periodically as follows:

16.1.1 Standard Dry Gas Meter Calibration.

16.1.1.1. The DGM to be calibrated and used as a secondary reference meter should be of high quality and have an appropriately sized capacity (*e.g.*, 3 liters/rev (0.1 ft^3/rev)). A spirometer (400 liters (14 ft^3) or more capacity), or equivalent, may be used for this calibration, although a wet test meter is usually more practical. The wet test meter should have a capacity of 30 liters/rev (1 ft^3/rev) and capable of measuring volume to within 1.0 percent. Wet test meters should be checked against a spirometer or a liquid displacement meter to ensure the accuracy of the wet test meter. Spirometers or wet test meters of other sizes may be used, provided that the specified accuracies of the procedure are maintained.

16.1.1.2 Set up the components as shown in Figure 5–7. A spirometer, or equivalent, may be used in place of the wet test meter in the system. Run the pump for at least 5 minutes at a flow rate of about 10 liters/min (0.35 cfm) to condition the interior surface of the wet test meter. The pressure drop indicated by the manometer at the inlet side of the DGM should be minimized (no greater than 100 mm H_2O (4 in. H_2O) at a flow rate of 30 liters/min (1 cfm)). This can be accomplished by using large diameter tubing connections and straight pipe fittings.

16.1.1.3 Collect the data as shown in the example data sheet (see Figure 5–8). Make triplicate runs at each of the flow rates and at no less than five different flow rates. The range of flow rates should be between 10 and 34 liters/min (0.35 and 1.2 cfm) or over the expected operating range.

16.1.1.4 Calculate flow rate, Q, for each run using the wet test meter volume, V_W, and the run time, θ. Calculate the DGM coefficient, Y_{ds}, for each run. These calculations are as follows:

$$Q = K_1 \frac{P_{bar} V_w}{(T_w + T_{std})\theta} \qquad \text{Eq. 5-9}$$

$$Y_{ds} = \frac{V_w (T_{ds} + T_{std}) P_{bar}}{V_{ds}(T_w + T_{std})\left(P_{bar} + \frac{\Delta p}{13.6}\right)} \qquad \text{Eq. 5-10}$$

Where:

K_1 = 0.3858 °C/mm Hg for metric units=17.64 °F/in. Hg for English units.

V_W = Wet test meter volume, liter (ft^3).

V_{ds} = Dry gas meter volume, liter (ft^3).

T_{ds} = Average dry gas meter temperature, °C (°F).

T_{adj} = 273 °C for metric units = 460 °F for English units.

T_W = Average wet test meter temperature, °C (°F)

P_{bar} = Barometric pressure, mm Hg (in. Hg).
Δp = Dry gas meter inlet differential pressure, mm H_2O (in. H_2O).
θ = Run time, min.

16.1.1.5 Compare the three Y_{ds} values at each of the flow rates and determine the maximum and minimum values. The difference between the maximum and minimum values at each flow rate should be no greater than 0.030. Extra sets of triplicate runs may be made in order to complete this requirement. In addition, the meter coefficients should be between 0.95 and 1.05. If these specifications cannot be met in three sets of successive triplicate runs, the meter is not suitable as a calibration standard and should not be used as such. If these specifications are met, average the three Y_{ds} values at each flow rate resulting in no less than five average meter coefficients, Y_{ds}.

16.1.1.6 Prepare a curve of meter coefficient, Y_{ds}, versus flow rate, Q, for the DGM. This curve shall be used as a reference when the meter is used to calibrate other DGMs and to determine whether recalibration is required.

16.1.2 Standard Dry Gas Meter Recalibration.

16.1.2.1 Recalibrate the standard DGM against a wet test meter or spirometer annually or after every 200 hours of operation, whichever comes first. This requirement is valid provided the standard DGM is kept in a laboratory and, if transported, cared for as any other laboratory instrument. Abuse to the standard meter may cause a change in the calibration and will require more frequent recalibrations.

16.1.2.2 As an alternative to full recalibration, a two-point calibration check may be made. Follow the same procedure and equipment arrangement as for a full recalibration, but run the meter at only two flow rates [suggested rates are 14 and 30 liters/min (0.5 and 1.0 cfm)]. Calculate the meter coefficients for these two points, and compare the values with the meter calibration curve. If the two coefficients are within 1.5 percent of the calibration curve values at the same flow rates, the meter need not be recalibrated until the next date for a recalibration check.

16.2 Critical Orifices As Calibration Standards. Critical orifices may be used as calibration standards in place of the wet test meter specified in Section 16.1, provided that they are selected, calibrated, and used as follows:

16.2.1 Selection of Critical Orifices.

16.2.1.1 The procedure that follows describes the use of hypodermic needles or stainless steel needle tubings which have been found suitable for use as critical orifices. Other materials and critical orifice designs may be used provided the orifices act as true critical orifices (*i.e.,* a critical vacuum can be obtained, as described in Section 16.2.2.2.3). Select five critical orifices that are appropriately sized to cover the range of flow rates between 10 and 34 liters/min (0.35 and 1.2 cfm) or the expected operating range. Two of the critical orifices should bracket the expected operating range. A minimum of three critical orifices will be needed to calibrate a Method 5 DGM; the other two critical orifices can serve as spares and provide better selection for bracketing the range of operating flow rates. The needle sizes and tubing lengths shown in Table 5–1 in Section 18.0 give the approximate flow rates.

16.2.1.2 These needles can be adapted to a Method 5 type sampling train as follows: Insert a serum bottle stopper, 13 by 20 mm sleeve type, into a ½-inch Swagelok (or equivalent) quick connect. Insert the needle into the stopper as shown in Figure 5–9.

16.2.2 Critical Orifice Calibration. The procedure described in this section uses the Method 5 meter box configuration with a DGM as described in Section 6.1.1.9 to calibrate the critical orifices. Other schemes may be used, subject to the approval of the Administrator.

16.2.2.1 Calibration of Meter Box. The critical orifices must be calibrated in the same configuration as they will be used (*i.e.,* there should be no connections to the inlet of the orifice).

16.2.2.1.1 Before calibrating the meter box, leak check the system as follows: Fully open the coarse adjust valve, and completely close the by-pass valve. Plug the inlet. Then turn on the pump, and determine whether there is any leakage. The leakage rate shall be zero (*i.e.,* no detectable movement of the DGM dial shall be seen for 1 minute).

16.2.2.1.2 Check also for leakages in that portion of the sampling train between the pump and the orifice meter. See Section 8.4.1 for the procedure; make any corrections, if necessary. If leakage is detected, check for cracked gaskets, loose fittings, worn O-rings, etc., and make the necessary repairs.

16.2.2.1.3 After determining that the meter box is leakless, calibrate the meter box according to the procedure given in Section 10.3. Make sure that the wet test meter meets the requirements stated in Section 16.1.1.1. Check the water level in the wet test meter. Record the DGM calibration factor, Y.

16.2.2.2 Calibration of Critical Orifices. Set up the apparatus as shown in Figure 5–10.

16.2.2.2.1 Allow a warm-up time of 15 minutes. This step is important to equilibrate the temperature conditions through the DGM.

16.2.2.2.2 Leak check the system as in Section 16.2.2.1.1. The leakage rate shall be zero.

16.2.2.2.3 Before calibrating the critical orifice, determine its suitability and the appropriate operating vacuum as follows: Turn on the pump, fully open the coarse adjust valve, and adjust the by-pass valve to give a vacuum reading corresponding to about half of atmospheric pressure. Observe the meter box orifice manometer reading, ΔH. Slowly increase the vacuum reading until a stable reading is obtained on the meter box orifice manometer. Record the critical vacuum for each orifice. Orifices that do not reach a critical value shall not be used.

16.2.2.2.4 Obtain the barometric pressure using a barometer as described in Section 6.1.2. Record the barometric pressure, P_{bar}, in mm Hg (in. Hg).

16.2.2.2.5 Conduct duplicate runs at a vacuum of 25 to 50 mm Hg (1 to 2 in. Hg) above the critical vacuum. The runs shall be at least 5 minutes each. The DGM volume readings shall be in increments of complete revolutions of the DGM. As a guideline, the times should not differ by more than 3.0 seconds (this includes allowance for changes in the DGM temperatures) to achieve ± 0.5 percent in K′ (see Eq. 5–11). Record the information listed in Figure 5–11.

16.2.2.2.6 Calculate K′ using Equation 5–11.

$$K^1 = \frac{K_1 V_m Y \left(P_{bar} + \frac{\Delta H}{13.6} \right) T_{amb}^{1/2}}{P_{bar} T_m \theta} \qquad \text{Eq. 5-11}$$

Where:

K′ = Critical orifice coefficient, $[m^3)(°K)^{1/2}]/$

[(mm Hg)(min)] {[(ft³)(°R)½)] [(in. Hg)(min)].
T_{amb} = Absolute ambient temperature, °K (°R).

Calculate the arithmetic mean of the K′ values. The individual K' values should not differ by more than ±0.5 percent from the mean value.

16.2.3 Using the Critical Orifices as Calibration Standards.

16.2.3.1 Record the barometric pressure.

16.2.3.2 Calibrate the metering system according to the procedure outlined in Section 16.2.2. Record the information listed in Figure 5–12.

16.2.3.3 Calculate the standard volumes of air passed through the DGM and the critical orifices, and calculate the DGM calibration factor, Y, using the equations below:

$$V_{m(std)} = \frac{K_1 V_m \left[P_{bar} + \left(\frac{\Delta H}{13.6} \right) \right]}{T_m} \qquad \text{Eq. 5-12}$$

$$V_{cr(std)} = K_1 \frac{P_{bar} \Theta}{\sqrt{T_{amb}}} \qquad \text{Eq. 5-13}$$

$$Y = \frac{V_{cr\,(std)}}{V_{m(std)}} \qquad \text{Eq. 5-14}$$

Where:

$V_{cr(std)}$ = Volume of gas sample passed through the critical orifice, corrected to standard conditions, dscm (dscf).
K_1 = 0.3858 K/mm Hg for metric units
= 17.64 °R/in. Hg for English units.

16.2.3.4 Average the DGM calibration values for each of the flow rates. The calibration factor, Y, at each of the flow rates should not differ by more than ± 2 percent from the average.

16.2.3.5 To determine the need for recalibrating the critical orifices, compare the DGM Y factors obtained from two adjacent orifices each time a DGM is calibrated; for example, when checking orifice 13/2.5, use orifices 12/10.2 and 13/5.1. If any critical orifice yields a DGM Y factor differing by more than 2 percent from the others, recalibrate the critical orifice according to Section 16.2.2.

17.0 References.

1. Addendum to Specifications for Incinerator Testing at Federal Facilities. PHS, NCAPC. December 6, 1967.
2. Martin, Robert M. Construction Details of Isokinetic Source-Sampling Equipment. Environmental Protection Agency. Research Triangle Park, NC. APTD–0581. April 1971.
3. Rom, Jerome J. Maintenance, Calibration, and Operation of Isokinetic Source Sampling Equipment. Environmental Protection Agency. Research Triangle Park, NC. APTD–0576. March 1972.
4. Smith, W.S., R.T. Shigehara, and W.F. Todd. A Method of Interpreting Stack Sampling Data. Paper Presented at the 63rd Annual Meeting of the Air Pollution Control Association, St. Louis, MO. June 14–19, 1970.
5. Smith, W.S., et al. Stack Gas Sampling Improved and Simplified With New Equipment. APCA Paper No. 67–119. 1967.
6. Specifications for Incinerator Testing at Federal Facilities. PHS, NCAPC. 1967.
7. Shigehara, R.T. Adjustment in the EPA Nomograph for Different Pitot Tube Coefficients and Dry Molecular Weights. Stack Sampling News 2:4–11. October 1974.
8. Vollaro, R.F. A Survey of Commercially Available Instrumentation for the Measurement of Low-Range Gas Velocities. U.S. Environmental Protection Agency, Emission Measurement Branch. Research Triangle Park, NC. November 1976 (unpublished paper).
9. Annual Book of ASTM Standards. Part 26. Gaseous Fuels; Coal and Coke; Atmospheric Analysis. American Society for Testing and Materials. Philadelphia, PA. 1974. pp. 617–622.
10. Felix, L.G., G.I. Clinard, G.E. Lacy, and J.D. McCain. Inertial Cascade Impactor Substrate Media for Flue Gas Sampling. U.S. Environmental Protection Agency. Research Triangle Park, NC 27711. Publication No. EPA–600/7–77–060. June 1977. 83 pp.
11. Westlin, P.R. and R.T. Shigehara. Procedure for Calibrating and Using Dry Gas Volume Meters as Calibration Standards. Source Evaluation Society Newsletter. *3*(1):17–30. February 1978.
12. Lodge, J.P., Jr., J.B. Pate, B.E. Ammons, and G.A. Swanson. The Use of Hypodermic Needles as Critical Orifices in Air Sampling. J. Air Pollution Control Association. *16*:197–200. 1966.

18.0 Tables, Diagrams, Flowcharts, and Validation Data

Gauge/cm	Flow rate liters/min.	Gauge/cm	Flow rate liters/min.
12/7.6	32.56	14/2.5	19.54
12/10.2	30.02	14/5.1	17.27
13/2.5	25.77	14/7.6	16.14
13/5.1	23.50	15/3.2	14.16
13/7.6	22.37	15/7.6	11.61
13/10.2	20.67	15/10.2	10.48

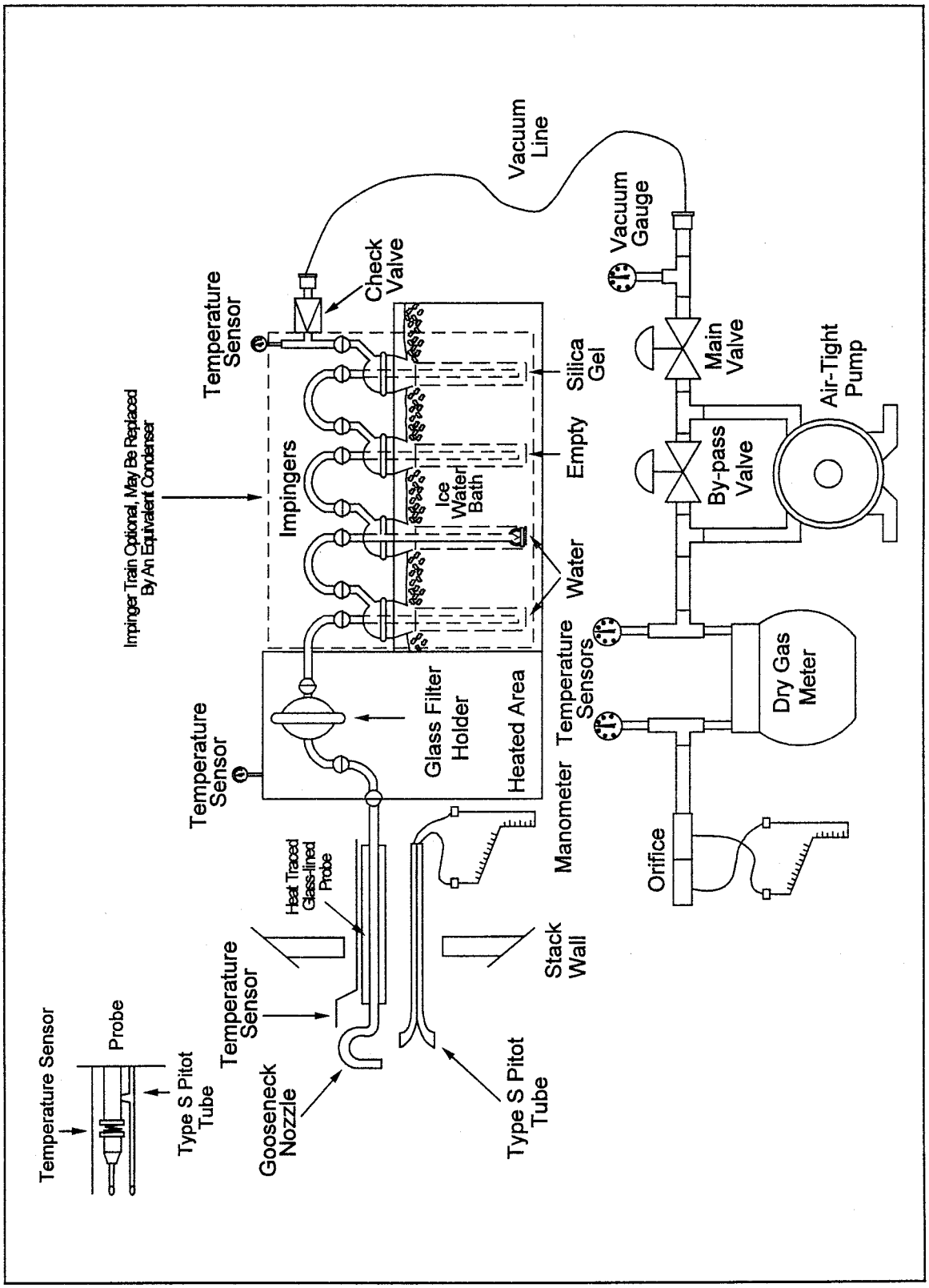

Figure 5-1. Particulate Sampling Train.

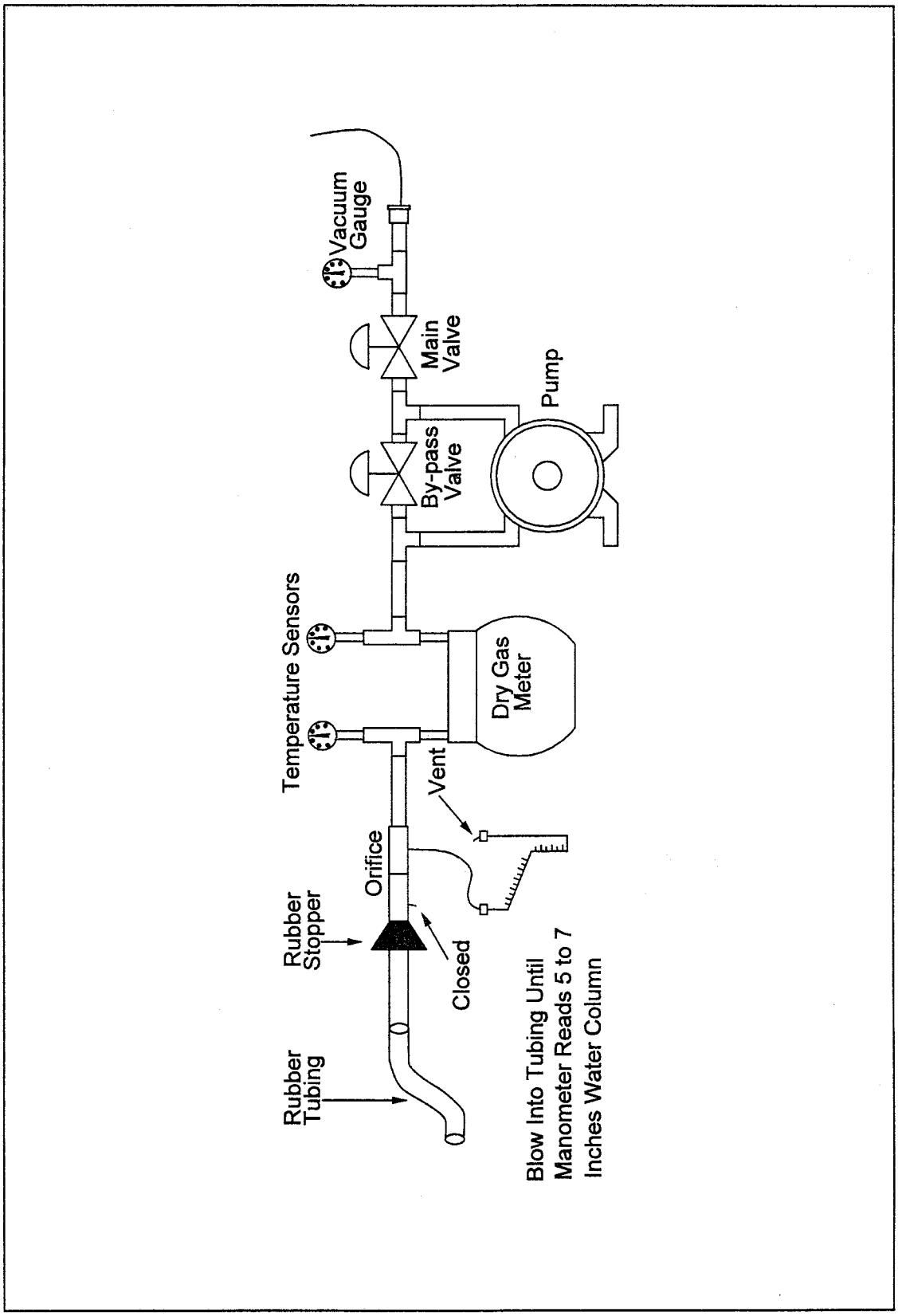

Figure 5-2. Leak Check of Meter Box.

Plant _____
Location _____
Operator _____
Date _____
Run No. _____
Sample box No. _____
Meter box No. _____
Meter $\Delta H@$ _____
C factor _____
Pitot tube coefficient, Cp _____

SCHEMATIC OF STACK CROSS SECTION

Ambient temperature _____
Barometric pressure _____
Assumed moisture, % _____
Probe length, (ft.) _____
Nozzle identification No. _____
Average calibrated nozzle diameter, (in.) _____
Probe heater setting _____
Leak rate, (cfm) _____
Static pressure, (in. Hg) _____
Filter No. _____

Traverse point number	Sampling time	Vacuum	Stack temperature	Velocity head	Pressure differential across orifice meter	Gas meter reading	Gas sample temperature at dry gas meter		Filter temperature	Temperature of gas leaving condenser or last impinger
							Inlet	Outlet		
	min.	(in.Hg)	(T_s) (°F)	(ΔP_s)(in. H_2O)	(in. H_2O)	(ft^3)	(°F)	(°F)	(°F)	(°F)
Total							Avg.	Avg.		
Average							Avg.			

Figure 5-3. Particulate Field Data.

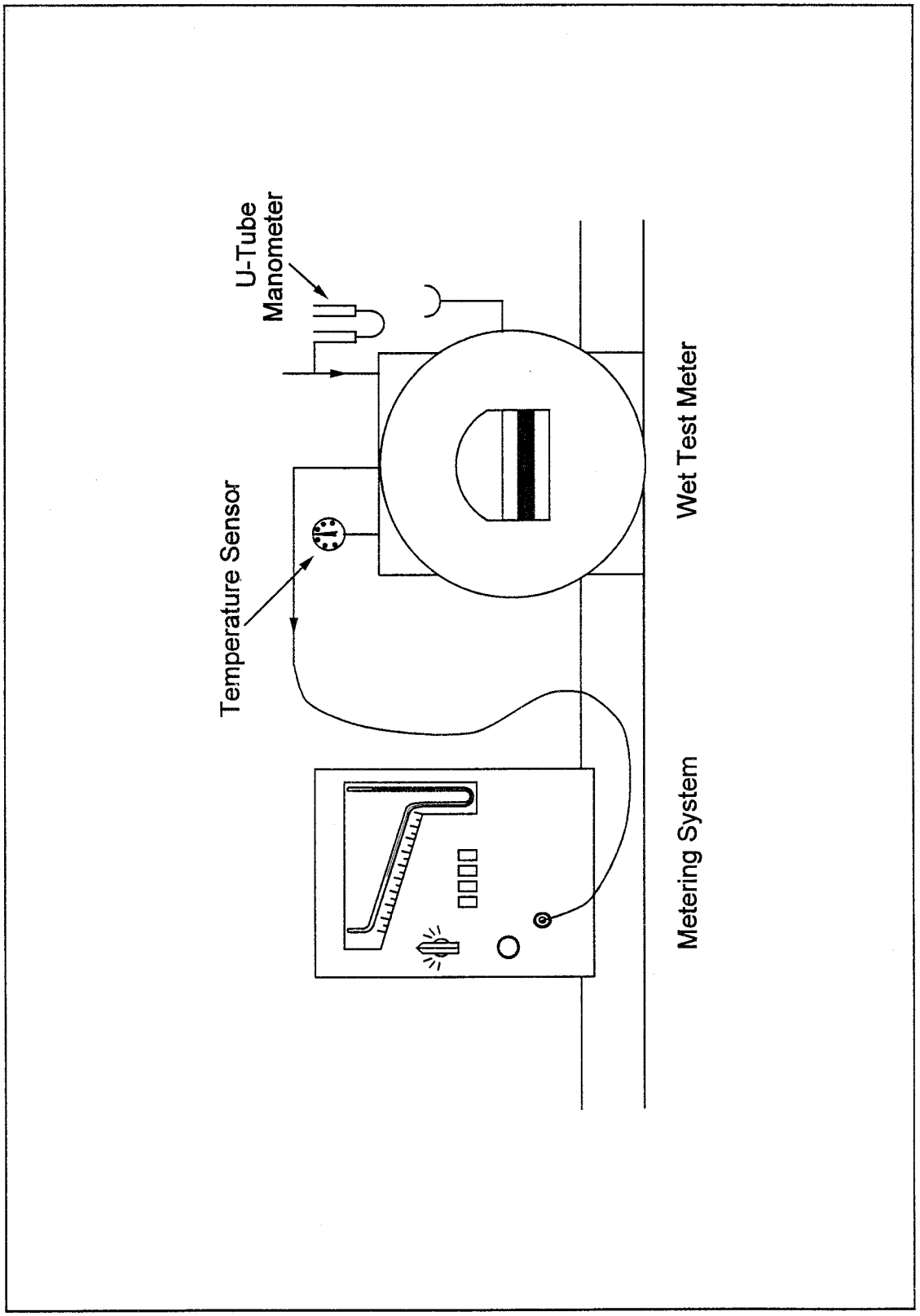

Figure 5-4. Equipment arrangement for metering system calibration.

Date: _____ Metering System Identification: _____

Barometric pressure, P_b = _____ in. Hg

Orifice manometer setting ΔH in. H_2O	Spirometer (wet meter) gas volume, V_w ft^3	Dry gas meter volume, V_m, ft^3	Temperatures				Time Θ min
			Spirometer (wet meter) T_w °F	Dry Gas Meter			
				Inlet T_i °F	Outlet T_o °F	Average T_m °F	

Calculations

ΔH in H_2O	Y				ΔH@		
Average							

Y = Ratio of reading of wet test meter to dry test meter; tolerance for individual values ± 0.02 from average.

$\Delta H_@$ = Orifice pressure differential that equates to 0.75 cfm of air @ 68°F and 29.92 inches of mercury, in. H_2O; tolerance for individual values ± 0.20 from average.

Figure 5-5. Example Data Sheet for Calibration of Metering System (English Units).

Plant
Date
Run No.
Filter No.
Amount liquid lost during transport
Acetone blank volume, m1
Acetone blank concentration, mg/mg (Equation 5–4)
Acetone wash blank, mg (Equation 5–5)

Container number	Weight of particulate collected, mg		
	Final weight	Tare weight	Weight gain
1.			
2.			
Total: Less acetone blank. Weight of particulate matter.			

	Volume of liquid water collected	
	Impinger volume, ml	Silica gel weight, g
Final Initial Liquid collected Total volume collected	.....	g* ml

*Convert weight of water to volume by dividing total weight increase by density of water (1 g/ml).

Figure 5–6. Analytical Data Sheet

$$\frac{\text{Increase, g}}{(1\text{g / ml})} = \text{Volume water, ml}$$

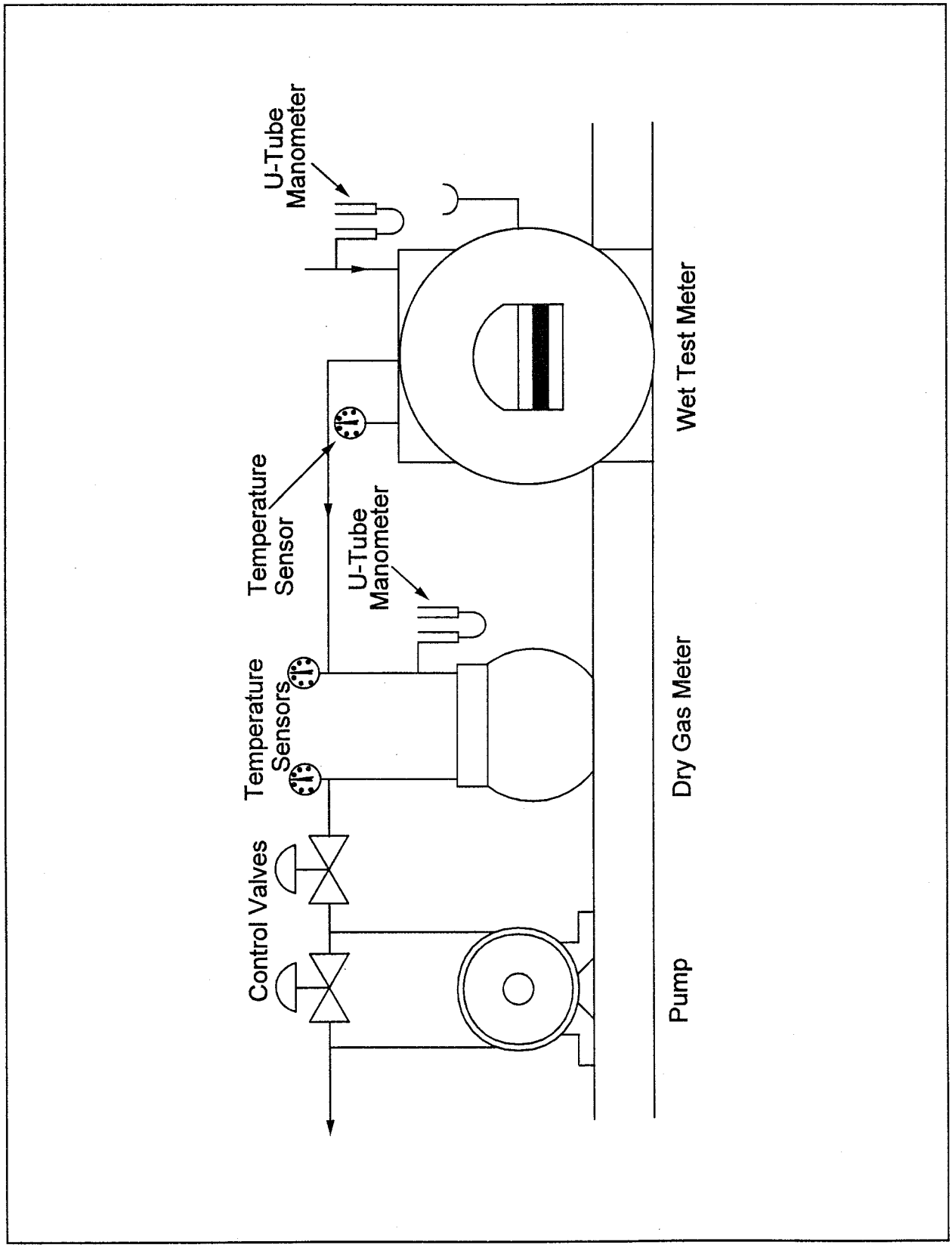

Figure 5-7. Equipment Arrangement for Dry Gas Meter Calibration.

Date: _____

Dry Gas Meter Identification: _____

Barometric Pressure (P): _____ in. Hg

Approximate Flow Rate ($\tilde{Q}$) cfm	Spirometer (Wet Meter) Gas Volume (V_s) ft³	Dry Gas Meter Volume (V_{dg}) ft³	Temperatures: Spirometer (Wet Meter) (t_s) °F	Temperatures: Dry Gas Meter: Inlet (t_i) °F	Temperatures: Dry Gas Meter: Outlet (t_o) °F	Temperatures: Dry Gas Meter: Average ($\bar{t}_d$) °F	Dry Gas Meter Pressure (Δp) in. H_2O	Time (q) ft³	Flow Rate (Q) cfm	Meter Coefficient (Y_{ds})	Average Meter Coefficient ($\overline{Y_{ds}}$)
0.40											
0.60											
0.80											
1.00											
1.20											

$$Q = K_1 \frac{P_{bar} V_w}{(T_w + T_{std} Q)} \qquad Y_{ds} = \frac{V_w (T_{ds} + T_{std}) P_{bar}}{V_{ds} (T_w + T_{std}) (P_{bar} + \Delta P/13.6)}$$

Figure 5-8. Example Data Sheet for Calibration of a Standard Dry Gas Meter for Method 5 Sampling Equipment (English units).

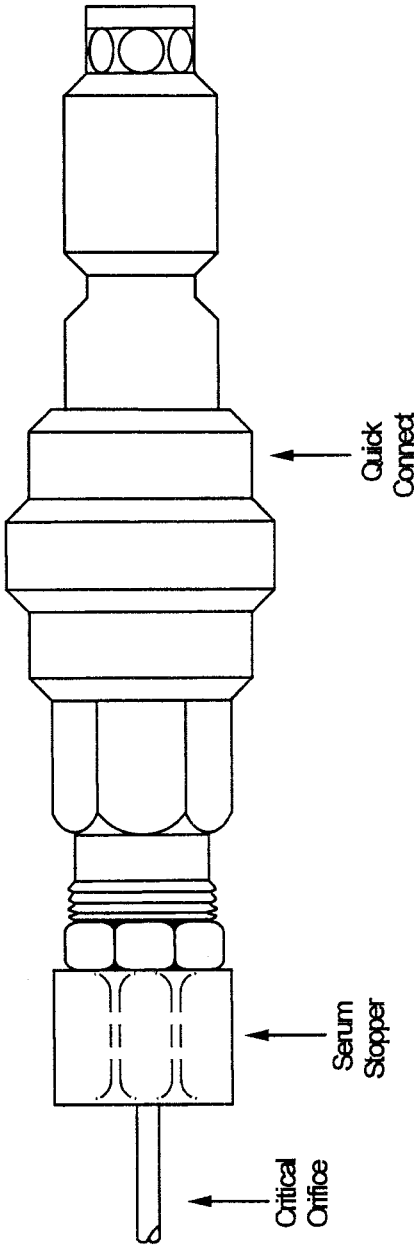

Figure 5-9. Critical Orifice Adaptation to Method 5 Metering System.

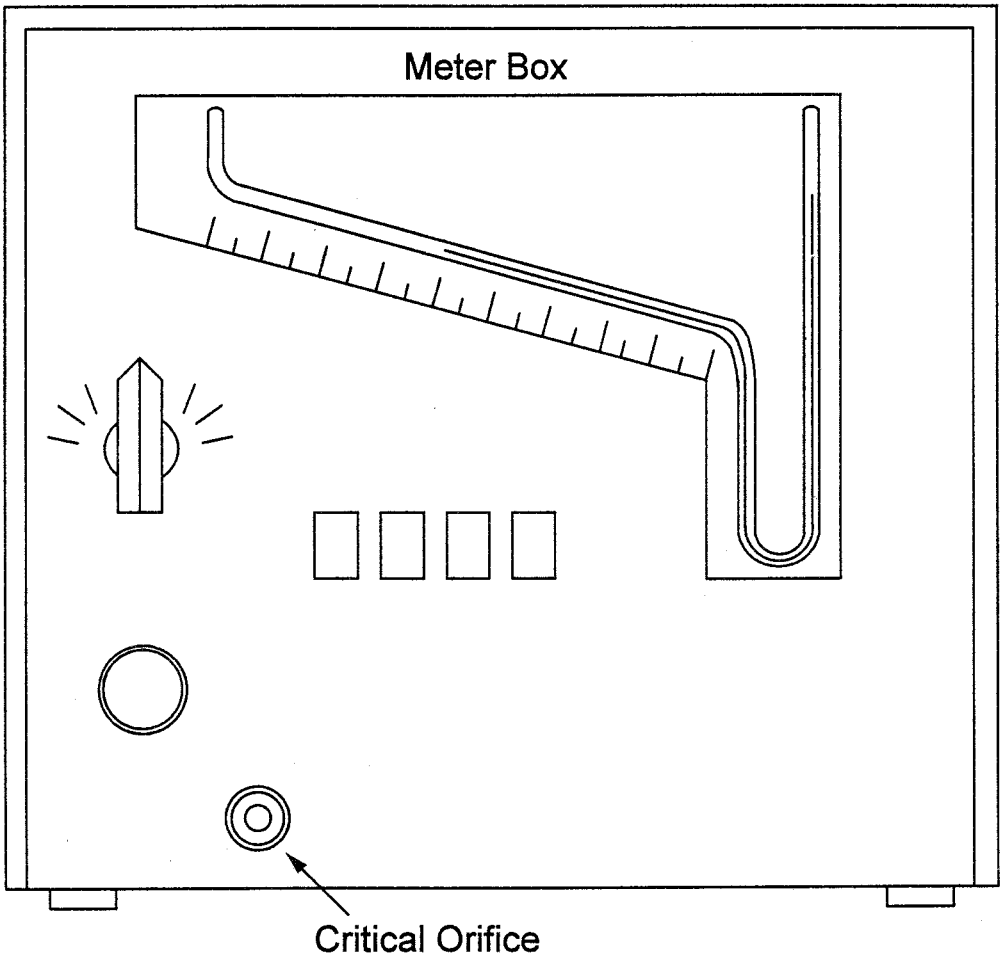

Figure 5-10. Apparatus Setup.

Date
Train ID
DGM cal. factor
Critical orifice ID

Dry gas meter		Run No.	
		1	2
Final reading	m^3 (ft^3)		
Initial reading	m^3 (ft^3)		
Difference, V_m	m^3 (ft^3)		
Inlet/Outlet			
Temperatures:	°C (°F)	/	/
Initial	°C (°F)	/	/
Final	min/sec	/	/
Av. Temeperature, t_m	min		
Time, θ			
Orifice man. rdg., ΔH	mm (in.) H_2		
Bar. pressure, P_{bar}	mm (in.) Hg		
Ambient temperature, t_{amb}	mm (in.) Hg		
Pump vacuum			
K′ factor			
Average			

Figure 5–11. Data sheet of determining K′ factor.

Date
Train ID
Critical orifice ID
Critical orifice K' factor

Dry gas meter		Run No.	
		1	2
Final reading	m^3 (ft^3)		
Initial reading	m^3 (ft^3)		
Difference, V_m	m^3 (ft^3)		
Inlet/outlet temperatures	°C (°F)	/	/
Initial	°C (°F)	/	/
Final	°C (°F)		
Avg. Temperature, t_m	min/sec	/	/
Time, θ	min		
Orifice man. rdg., ΔH	min		
Bar. pressure, P_{bar}	mm (in.) H_2O		
Ambient temperature, t_{amb}	mm (in.) Hg		
Pump vacuum	°C (°F)		
$V_{m(std)}$	mm (in.) Hg		
$V_{cr(std)}$	m^3 (ft^3)		
DGM cal. factor, Y	m^3 (ft^3)		

Figure 5–12. Data Sheet for Determining DGM Y Factor

Method 5A—Determination of Particulate Matter Emissions From the Asphalt Processing and Asphalt Roofing Industry

Note: This method does not include all of the specifications (*e.g.,* equipment and supplies) and procedures (*e.g.,* sampling and analytical) essential to its performance. Some material is incorporated by reference from other methods in this part. Therefore, to obtain reliable results, persons using this method should have a thorough knowledge of at least the following additional test methods: Method 1, Method 2, Method 3, and Method 5.

1.0 Scope and Applications

1.1 Analyte. Particulate matter (PM). No CAS number assigned.

1.2 Applicability. This method is applicable for the determination of PM emissions from asphalt roofing industry process saturators, blowing stills, and other sources as specified in the regulations.

1.3 Data Quality Objectives. Adherence to the requirements of this method will enhance the quality of the data obtained from air pollutant sampling methods.

2.0 Summary of Method

Particulate matter is withdrawn isokinetically from the source and collected on a glass fiber filter maintained at a temperature of 42 ± 10 °C (108 ± 18 °F). The PM mass, which includes any material that condenses at or above the filtration temperature, is determined gravimetrically after the removal of uncombined water.

3.0 Definitions [Reserved]

4.0 Interferences [Reserved]

5.0 Safety

5.1 Disclaimer. This method may involve hazardous materials, operations, and equipment. This test method may not address all of the safety problems associated with its use. It is the responsibility of the user of this test

method to establish appropriate safety and health practices and to determine the applicability of regulatory limitations prior to performing this test method.

6.0 Equipment and Supplies

6.1 Sample Collection. Same as Method 5, Section 6.1, with the following exceptions and additions:

6.1.1 Probe Liner. Same as Method 5, Section 6.1.1.2, with the note that at high stack gas temperatures greater than 250 °C (480 °F), water-cooled probes may be required to control the probe exit temperature to 42 ± 10 °C (108 ± 18 °F).

6.1.2 Precollector Cyclone. Borosilicate glass following the construction details shown in Air Pollution Technical Document (APTD)–0581, ''Construction Details of Isokinetic Source-Sampling Equipment'' (Reference 2 in Method 5, Section 17.0).

Note: The cyclone shall be used when the stack gas moisture is greater than 10 percent, and shall not be used otherwise.

6.1.3 Filter Heating System. Any heating (or cooling) system capable of maintaining a sample gas temperature at the exit end of the filter holder during sampling at 42 ± 10 °C (108 ± 18 °F).

6.2 Sample Recovery. The following items are required for sample recovery:

6.2.1 Probe-Liner and Probe-Nozzle Brushes, Graduated Cylinder and/or Balance, Plastic Storage Containers, and Funnel and Rubber Policeman. Same as in Method 5, Sections 6.2.1, 6.2.5, 6.2.6, and 6.2.7, respectively.

6.2.2 Wash Bottles. Glass.

6.2.3 Sample Storage Containers. Chemically resistant 500-ml or 1,000-ml borosilicate glass bottles, with rubber-backed Teflon screw cap liners or caps that are constructed so as to be leak-free, and resistant to chemical attack by 1,1,1-trichloroethane (TCE). (Narrow-mouth glass bottles have been found to be less prone to leakage.)

6.2.4 Petri Dishes. Glass, unless otherwise specified by the Administrator.

6.2.5 Funnel. Glass.

6.3 Sample Analysis. Same as Method 5, Section 6.3, with the following additions:

6.3.1 Beakers. Glass, 250-ml and 500-ml.

6.3.2 Separatory Funnel. 100-ml or greater.

7.0. Reagents and Standards

7.1 Sample Collection. The following reagents are required for sample collection:

7.1.1 Filters, Silica Gel, Water, and Crushed Ice. Same as in Method 5, Sections 7.1.1, 7.1.2, 7.1.3, and 7.1.4, respectively.

7.1.2 Stopcock Grease. TCE-insoluble, heat-stable grease (if needed). This is not necessary if screw-on connectors with Teflon sleeves, or similar, are used.

7.2 Sample Recovery. Reagent grade TCE, ≤0.001 percent residue and stored in glass bottles. Run TCE blanks before field use, and use only TCE with low blank values (≤0.001 percent). In no case shall a blank value of greater than 0.001 percent of the weight of TCE used be subtracted from the sample weight.

7.3 Analysis. Two reagents are required for the analysis:

7.3.1 TCE. Same as in Section 7.2.

7.3.2 Desiccant. Same as in Method 5, Section 7.3.2.

8.0. Sample Collection, Preservation, Storage, and Transport

8.1. Pretest Preparation. Unless otherwise specified, maintain and calibrate all components according to the procedure described in APTD–0576, ''Maintenance, Calibration, and Operation of Isokinetic Source-Sampling Equipment'' (Reference 3 in Method 5, Section 17.0).

8.1.1 Prepare probe liners and sampling nozzles as needed for use. Thoroughly clean each component with soap and water followed by a minimum of three TCE rinses. Use the probe and nozzle brushes during at least one of the TCE rinses (refer to Section 8.7 for rinsing techniques). Cap or seal the open ends of the probe liners and nozzles to prevent contamination during shipping.

8.1.2 Prepare silica gel portions and glass filters as specified in Method 5, Section 8.1.

8.2 Preliminary Determinations. Select the sampling site, probe nozzle, and probe length as specified in Method 5, Section 8.2. Select a total sampling time greater than or equal to the minimum total sampling time specified in the ''Test Methods and Procedures'' section of the applicable subpart of the regulations. Follow the guidelines outlined in Method 5, Section 8.2 for sampling time per point and total sample volume collected.

8.3 Preparation of Sampling Train. Prepare the sampling train as specified in Method 5, Section 8.3, with the addition of the precollector cyclone, if used, between the probe and filter holder. The temperature of the precollector cyclone, if used, should be maintained in the same range as that of the filter, *i.e.,* 42 ± 10 °C (108 ± 18 °F). Use no stopcock grease on ground glass joints unless grease is insoluble in TCE.

8.4 Leak-Check Procedures. Same as Method 5, Section 8.4.

8.5 Sampling Train Operation. Operate the sampling train as described in Method 5, Section 8.5, except maintain the temperature of the gas exiting the filter holder at 42 ± 10 °C (108 ± 18 °F).

8.6 Calculation of Percent Isokinetic. Same as Method 5, Section 8.6.

8.7 Sample Recovery. Same as Method 5, Section 8.7.1 through 8.7.6.1, with the addition of the following:

8.7.1 Container No. 2 (Probe to Filter Holder).

8.7.1.1 Taking care to see that material on the outside of the probe or other exterior surfaces does not get into the sample, quantitatively recover PM or any condensate from the probe nozzle, probe fitting, probe liner, precollector cyclone and collector flask (if used), and front half of the filter holder by washing these components with TCE and placing the wash in a glass container. Carefully measure the total amount of TCE used in the rinses. Perform the TCE rinses as described in Method 5, Section 8.7.6.2, using TCE instead of acetone.

8.7.1.2 Brush and rinse the inside of the cyclone, cyclone collection flask, and the front half of the filter holder. Brush and rinse each surface three times or more, if necessary, to remove visible PM.

8.7.2 Container No. 3 (Silica Gel). Same as in Method 5, Section 8.7.6.3.

8.7.3 Impinger Water. Same as Method 5, Section 8.7.6.4.

8.8 Blank. Save a portion of the TCE used for cleanup as a blank. Take 200 ml of this TCE directly from the wash bottle being used, and place it in a glass sample container labeled ''TCE Blank.''

9.0 Quality Control

9.1 Miscellaneous Quality Control Measures.

Section	Quality control measure	Effect
8.4, 10.0	Sampling equipment leak check and calibration.	Ensures accurate measurement of stack gas flow rate, sample volume.

9.2 A quality control (QC) check of the volume metering system at the field site is suggested before collecting the sample. Use the procedure outlined in Method 5, Section 9.2.

10.0 Calibration and Standardization

Same as Method 5, Section 10.0.

11.0 Analytical Procedures

11.1 Analysis. Record the data required on a sheet such as the one shown in Figure 5A–1. Handle each sample container as follows:

11.1.1 Container No. 1 (Filter). Transfer the filter from the sample container to a tared glass weighing dish, and desiccate for 24 hours in a desiccator containing anhydrous calcium sulfate. Rinse Container No. 1 with a measured amount of TCE, and analyze this rinse with the contents of Container No. 2. Weigh the filter to a constant weight. For the purpose of this analysis, the term ''constant weight'' means a difference of no more than 10 percent of the net filter weight or 2 mg (whichever is greater) between two consecutive weighings made 24 hours apart. Report the ''final weight'' to the nearest 0.1 mg as the average of these two values.

11.1.2 Container No. 2 (Probe to Filter Holder).

11.1.2.1 Before adding the rinse from Container No. 1 to Container No. 2, note the level of liquid in Container No. 2, and confirm on the analysis sheet whether leakage occurred during transport. If noticeable leakage occurred, either void the sample or take steps, subject to the approval of the Administrator, to correct the final results.

11.1.2.2 Add the rinse from Container No. 1 to Container No. 2 and measure the liquid in this container either volumetrically to ±1 ml or gravimetrically to ±0.5 g. Check to see whether there is any appreciable quantity of condensed water present in the TCE rinse (look for a boundary layer or phase separation). If the volume of condensed water appears larger than 5 ml, separate the oil-TCE fraction from the water fraction using a separatory funnel. Measure the volume of the water phase to the nearest ml; adjust the stack gas moisture content, if necessary (see Sections 12.3 and 12.4). Next, extract the water phase with several 25-ml portions of TCE until, by visual observation, the TCE does not remove any additional organic material. Transfer the remaining water fraction to a tared beaker and evaporate to dryness at 93 °C (200 °F), desiccate for 24 hours, and weigh to the nearest 0.1 mg.

11.1.2.3 Treat the total TCE fraction (including TCE from the filter container rinse and water phase extractions) as follows: Transfer the TCE and oil to a tared beaker, and evaporate at ambient temperature and pressure. The evaporation of TCE from the solution may take several days. Do not desiccate the sample until the solution reaches an apparent constant volume or until the odor of TCE is not detected. When it appears that the TCE has evaporated, desiccate the sample, and weigh it at 24-hour intervals to obtain a ''constant weight'' (as defined for Container No. 1 above). The ''total weight'' for Container No. 2 is the sum of the evaporated PM weight of the TCE-oil and water phase fractions. Report the results to the nearest 0.1 mg.

11.1.3 Container No. 3 (Silica Gel). This step may be conducted in the field. Weigh the spent silica gel (or silica gel plus impinger) to the nearest 0.5 g using a balance.

11.1.4 ''TCE Blank'' Container. Measure TCE in this container either volumetrically or gravimetrically. Transfer the TCE to a tared 250-ml beaker, and evaporate to dryness at ambient temperature and pressure. Desiccate for 24 hours, and weigh to a constant weight. Report the results to the nearest 0.1 mg.

Note: In order to facilitate the evaporation of TCE liquid samples, these samples may be dried in a controlled temperature oven at temperatures up to 38 °C (100 °F) until the liquid is evaporated.

12.0 Data Analysis and Calculations

Carry out calculations, retaining at least one extra significant figure beyond that of the acquired data. Round off figures after the final calculation. Other forms of the equations may be used as long as they give equivalent results.

12.1 Nomenclature. Same as Method 5, Section 12.1, with the following additions:

C_t = TCE blank residue concentration, mg/g.
m_t = Mass of residue of TCE blank after evaporation, mg.
V_{pc} = Volume of water collected in precollector, ml.
V_t = Volume of TCE blank, ml.
V_{tw} = Volume of TCE used in wash, ml.
W_t = Weight of residue in TCE wash, mg.
ρ_t = Density of TCE (see label on bottle), g/ml.

12.2 Dry Gas Meter Temperature, Orifice Pressure Drop, and Dry Gas Volume. Same as Method 5, Sections 12.2 and 12.3, except use data obtained in performing this test.

12.3 Volume of Water Vapor.

$$V_{w(std)} = K_2\left(V_{1c} + V_{pc}\right) \qquad \text{Eq. 5A-1}$$

Where:

K_2 = 0.001333 m^3/ml for metric units.
= 0.04706 ft^3/ml for English units.

12.4 Moisture Content.

$$B_{ws} = \frac{V_{w(std)}}{V_{m(std)} + V_{w(std)}} \qquad \text{Eq. 5A-2}$$

Note: In saturated or water droplet-laden gas streams, two calculations of the moisture content of the stack gas shall be made, one from the impinger and precollector analysis (Equations 5A–1 and 5A–2) and a second from the assumption of saturated conditions. The lower of the two values of moisture content shall be considered correct. The procedure for determining the moisture content based upon assumption of saturated conditions is given in Section 4.0 of Method 4. For the purpose of this method, the average stack gas temperature from Figure 5–3 of Method 5 may be used to make this determination, provided that the accuracy of the in-stack temperature sensor is within 1 °C (2 °F).

12.5 TCE Blank Concentration.

$$C_t = \frac{m_t}{V_t \rho_t} \qquad \text{Eq. 5A-3}$$

Note: In no case shall a blank value of greater than 0.001 percent of the weight of TCE used be subtracted from the sample weight.

12.6 TCE Wash Blank.

$$W_t = C_t V_{tw} \rho_t \qquad \text{Eq. 5A-4}$$

12.7 Total PM Weight. Determine the total PM catch from the sum of the weights obtained from Containers 1 and 2, less the TCE blank.

12.8 PM Concentration.

$$c_s = K_3 \frac{m_n}{V_{m(std)}} \qquad \text{Eq. 5A-5}$$

Where:

K_3 = 0.001 g/mg for metric units
= 0.0154 gr/mg for English units

12.9 Isokinetic Variation. Same as in Method 5, Section 12.11.

13.0 Method Performance [Reserved]

14.0 Pollution Prevention [Reserved]

15.0 Waste Management [Reserved]

16.0 References

Same as Method 5, Section 17.0.

17.0 Tables, Diagrams, Flowcharts, and Validation Data

Plant
Date
Run No.
Filter No.
Amount liquid lost during transport
Acetone blank volume, m1
Acetone blank concentration, mg/mg (Equation 5–4)
Acetone wash blank, mg (Equation 5–5)

Container number	Weight of particulate collected, mg		
	Final weight	Tare weight	Weight gain
1.			
2.			
Total: Less acetone blank. Weight of particulate matter.			

	Volume of liquid water collected	
	Impinger volume, ml	Silica gel weight, g
Final Initial Liquid collected Total volume collected	.....	g* ml

* Convert weight of water to volume by dividing total weight increase by density of water (1 g/ml).

$$\frac{\text{Increase, g}}{(1\text{g/ml})} = \text{Volume water, ml}$$

Method 5B—Determination of Nonsulfuric Acid Particulate Matter Emissions From Stationary Sources

Note: This method does not include all of the specifications (*e.g.,* equipment and supplies) and procedures (*e.g.,* sampling and analytical) essential to its performance. Some material is incorporated by reference from other methods in this part. Therefore, to obtain reliable results, persons using this method should have a thorough knowledge of at least the following additional test methods: Method 1, Method 2, Method 3, Method 5.

1.0 Scope and Application

1.1 Analyte. Nonsulfuric acid particulate matter. No CAS number assigned.

1.2 Applicability. This method is determining applicable for the determination of nonsulfuric acid particulate matter from stationary sources, only where specified by an applicable subpart of the regulations or where approved by the Administrator for a particular application.

1.3 Data Quality Objectives. Adherence to the requirements of this method will enhance the quality of the data obtained from air pollutant sampling methods.

2.0 Summary of Method

Particulate matter is withdrawn isokinetically from the source and collected on a glass fiber filter maintained at a temperature of 160 ± 14 °C (320 ± 25 °F). The collected sample is then heated in an oven at 160 °C (320 °F) for 6 hours to volatilize any condensed sulfuric acid that may have been collected, and the nonsulfuric acid particulate mass is determined gravimetrically.

3.0 Definitions [Reserved]

4.0 Interferences [Reserved]

5.0 Safety

5.1 Disclaimer. This method may involve hazardous materials, operations, and equipment. This test method may not address all of the safety problems associated with its use. It is the responsibility of the user of this test method to establish appropriate safety and health practices and to determine the applicability of regulatory limitations prior to performing this test method.

6.0 Equipment and Supplies

Same as Method 5, Section 6.0, with the following addition and exceptions:

6.1 Sample Collection. The probe liner heating system and filter heating system must be capable of maintaining a sample gas temperature of 160 ± 14 °C (320 ± 25 °F).

6.2 Sample Preparation. An oven is required for drying the sample.

7.0 Reagents and Standards

Same as Method 5, Section 7.0.

8.0 Sample Collection, Preservation, Storage, and Transport.

Same as Method 5, with the exception of the following:

8.1 Initial Filter Tare. Oven dry the filter at 160 ± 5 °C (320 ± 10 °F) for 2 to 3 hours, cool in a desiccator for 2 hours, and weigh. Desiccate to constant weight to obtain the initial tare weight. Use the applicable specifications and techniques of Section 8.1.3 of Method 5 for this determination.

8.2 Probe and Filter Temperatures. Maintain the probe outlet and filter temperatures at 160 ± 14 °C (320 ± 25 °F).

9.0 Quality Control

Same as Method 5, Section 9.0.

10.0 Calibration and Standardization

Same as Method 5, Section 10.0.

11.0 Analytical Procedure

Same as Method 5, Section 11.0, except replace Section

11.2.2 With the following:

11.1 Container No. 2. Note the level of liquid in the container, and confirm on the analysis sheet whether leakage occurred during transport. If a noticeable amount of leakage has occurred, either void the sample or use methods, subject to the approval of the Administrator, to correct the final results. Measure the liquid in this container either volumetrically to ±1 ml or gravimetrically to ±0.5 g. Transfer the

contents to a tared 250 ml beaker, and evaporate to dryness at ambient temperature and pressure. Then oven dry the probe and filter samples at a temperature of 160 ± 5 °C (320 ± 10 °F) for 6 hours. Cool in a desiccator for 2 hours, and weigh to constant weight. Report the results to the nearest 0.1 mg.

12.0 Data Analysis and Calculations

Same as in Method 5, Section 12.0.

13.0 Method Performance [Reserved]

14.0 Pollution Prevention [Reserved]

15.0 Waste Management [Reserved]

16.0 References

Same as Method 5, Section 17.0.

17.0 Tables, Diagrams, Flowcharts, and Validation Data. [Reserved]

* * * * *

Method 5D—Determination of Particulate Matter Emissions from Positive Pressure Fabric Filters

Note: This method does not include all of the specifications (*e.g.,* equipment and supplies) and procedures (*e.g.,* sampling and analytical) essential to its performance. Some material is incorporated by reference from other methods in this part. Therefore, to obtain reliable results, persons using this method should have a thorough knowledge of at least the following additional test methods: Method 1, Method 2, Method 3, Method 5, Method 17.

1.0 Scope and Application

1.1 Analyte. Particulate matter (PM). No CAS number assigned.

1.2 Applicability.

1.2.1 This method is applicable for the determination of PM emissions from positive pressure fabric filters. Emissions are determined in terms of concentration (mg/m^3 or gr/ft^3) and emission rate (kg/hr or lb/hr).

1.2.2 The General Provisions of 40 CFR part 60, § 60.8(e), require that the owner or operator of an affected facility shall provide performance testing facilities. Such performance testing facilities include sampling ports, safe sampling platforms, safe access to sampling sites, and utilities for testing. It is intended that affected facilities also provide sampling locations that meet the specification for adequate stack length and minimal flow disturbances as described in Method 1. Provisions for testing are often overlooked factors in designing fabric filters or are extremely costly. The purpose of this procedure is to identify appropriate alternative locations and procedures for sampling the emissions from positive pressure fabric filters. The requirements that the affected facility owner or operator provide adequate access to performance testing facilities remain in effect.

1.3 Data Quality Objectives. Adherence to the requirements of this method will enhance the quality of the data obtained from air pollutant sampling methods.

2.0 Summary of Method

2.1 Particulate matter is withdrawn isokinetically from the source and collected on a glass fiber filter maintained at a temperature at or above the exhaust gas temperature up to a nominal 120°C (248 ± 25°F). The particulate mass, which includes any material that condenses at or above the filtration temperature, is determined gravimetrically after the removal of uncombined water.

3.0 Definitions [Reserved]

4.0 Interferences [Reserved]

5.0 Safety

5.1 Disclaimer. This method may involve hazardous materials, operations, and equipment. This test method may not address all of the safety problems associated with its use. It is the responsibility of the user to establish appropriate safety and health practices and to determine the applicability of regulatory limitations prior to performing this test method.

6.0 Equipment and Supplies

Same as Section 6.0 of either Method 5 or Method 17.

7.0 Reagents and Standards

Same as Section 7.0 of either Method 5 or Method 17.

8.0 Sample Collection, Preservation, Storage, and Transport

Same Section 8.0 of either Method 5 or Method 17, except replace Section 8.2.1 of Method 5 with the following:

8.1 Determination of Measurement Site. The configuration of positive pressure fabric filter structures frequently are not amenable to emission testing according to the requirements of Method 1. Following are several alternatives for determining measurement sites for positive pressure fabric filters.

8.1.1 Stacks Meeting Method 1 Criteria. Use a measurement site as specified in Method 1, Section 11.1.

8.1.2 Short Stacks Not Meeting Method 1 Criteria. Use stack extensions and the procedures in Method 1. Alternatively, use flow straightening vanes of the ''egg-crate'' type (see Figure 5D–1). Locate the measurement site downstream of the straightening vanes at a distance equal to or greater than two times the average equivalent diameter of the vane openings and at least one-half of the overall stack diameter upstream of the stack outlet.

8.1.3 Roof Monitor or Monovent. (See Figure 5D–2). For a positive pressure fabric filter equipped with a peaked roof monitor, ridge vent, or other type of monovent, use a measurement site at the base of the monovent. Examples of such locations are shown in Figure 5D–2. The measurement site must be upstream of any exhaust point (*e.g.,* louvered vent).

8.1.4 Compartment Housing. Sample immediately downstream of the filter bags directly above the tops of the bags as shown in the examples in Figure 5D–2. Depending on the housing design, use sampling ports in the housing walls or locate the sampling equipment within the compartment housing.

8.2 Determination of Number and Location of Traverse Points. Locate the traverse points according to Method 1, Section 11.3. Because a performance test consists of at least three test runs and because of the varied configurations of positive pressure fabric filters, there are several schemes by which the number of traverse points can be determined and the three test runs can be conducted.

8.2.1 Single Stacks Meeting Method 1 Criteria. Select the number of traverse points according to Method 1. Sample all traverse points for each test run.

8.2.2 Other Single Measurement Sites. For a roof monitor or monovent, single compartment housing, or other stack not meeting Method 1 criteria, use at least 24 traverse points. For example, for a rectangular measurement site, such as a monovent, use a balanced 5×5 traverse point matrix. Sample all traverse points for each test run.

8.2.3 Multiple Measurement Sites. Sampling from two or more stacks or measurement sites may be combined for a test run, provided the following guidelines are met:

8.2.3.1 All measurement sites up to 12 must be sampled. For more than 12 measurement sites, conduct sampling on at least 12 sites or 50 percent of the sites, whichever is greater. The measurement sites sampled should be evenly, or nearly evenly, distributed among the available sites; if not, all sites are to be sampled.

8.2.3.2 The same number of measurement sites must be sampled for each test run.

8.2.3.3 The minimum number of traverse points per test run is 24. An exception to the 24-point minimum would be a test combining the sampling from two stacks meeting Method 1 criteria for acceptable stack length, and

Method 1 specifies fewer than 12 points per site.

8.2.3.4 As long as the 24 traverse points per test run criterion is met, the number of traverse points per measurement site may be reduced to eight.

8.2.3.5 Alternatively, conduct a test run for each measurement site individually using the criteria in Section 8.2.1 or 8.2.2 to determine the number of traverse points. Each test run shall count toward the total of three required for a performance test. If more than three measurement sites are sampled, the number of traverse points per measurement site may be reduced to eight as long as at least 72 traverse points are sampled for all the tests.

8.2.3.6 The following examples demonstrate the procedures for sampling multiple measurement sites.

8.2.3.6.1 Example 1: A source with nine circular measurement sites of equal areas may be tested as follows: For each test run, traverse three measurement sites using four points per diameter (eight points per measurement site). In this manner, test run number 1 will include sampling from sites 1,2, and 3; run 2 will include samples from sites 4, 5, and 6; and run 3 will include sites 7, 8, and 9. Each test area may consist of a separate test of each measurement site using eight points. Use the results from all nine tests in determining the emission average.

8.2.3.6.2 Example 2: A source with 30 rectangular measurement sites of equal areas may be tested as follows: For each of the three test runs, traverse five measurement sites using a 3×3 matrix of traverse points for each site. In order to distribute the sampling evenly over all the available measurement sites while sampling only 50 percent of the sites, number the sites consecutively from 1 to 30 and sample all the even numbered (or odd numbered) sites. Alternatively, conduct a separate test of each of 15 measurement sites using Section 8.2.1 or 8.2.2 to determine the number and location of traverse points, as appropriate.

8.2.3.6.3 Example 3: A source with two measurement sites of equal areas may be tested as follows: For each test of three test runs, traverse both measurement sites, using Section 8.2.3 in determining the number of traverse points. Alternatively, conduct two full emission test runs for each measurement site using the criteria in Section 8.2.1 or 8.2.2 to determine the number of traverse points.

8.2.3.7 Other test schemes, such as random determination of traverse points for a large number of measurement sites, may be used with prior approval from the Administrator.

8.3 Velocity Determination.

8.3.1 The velocities of exhaust gases from positive pressure baghouses are often too low to measure accurately with the type S pitot tube specified in Method 2 (*i.e.*, velocity head <1.3 mm H_2O (0.05 in. H_2O)). For these conditions, measure the gas flow rate at the fabric filter inlet following the procedures outlined in Method 2. Calculate the average gas velocity at the measurement site as shown in Section 12.2 and use this average velocity in determining and maintaining isokinetic sampling rates.

8.3.2 Velocity determinations to determine and maintain isokinetic rates at measurement sites with gas velocities within the range measurable with the type S pitot tube (*i.e.,* velocity head greater than 1.3 mm H_2O (0.05 in. H_2O)) shall be conducted according to the procedures outlined in Method 2.

8.4 Sampling. Follow the procedures specified in Sections 8.1 through 8.6 of Method 5 or Sections 8.1 through 8.25 in Method 17 with the exceptions as noted above.

8.5 Sample Recovery. Follow the procedures specified in Section 8.7 of Method 5 or Section 8.2 of Method 17.

9.0 Quality Control

9.1 Miscellaneous Quality Control Measures.

Section	Quality control measure	Effect
8.0, 10.0	Sampling equipment leak check and calibration.	Ensures accurate measurement of stack gas flow rate, sample volume.

9.2 Volume Metering System Checks. Same as Method 5, Section 9.2.

10.0 Calibration and Standardization

Same as Section 10.0 of either Method 5 or Method 17.

11.0 Analytical Procedure

Same as Section 11.0 of either Method 5 or Method 17.

12.0 Data Analysis and Calculations

Same as Section 12.0 of either Method 5 or Method 17 with the following exceptions:

12.1 Nomenclature.

A_o = Measurement site(s) total cross-sectional area, m^2 (ft^2).

$\overline{C}$ or C_{avg} = Average concentration of PM for all n runs, mg/scm (gr/scf).

Q_i = Inlet gas volume flow rate, m^3/sec (ft^3/sec).

m_i = Mass collected for run i of n, mg (gr).

T_o = Average temperature of gas at measurement site, °K (°R).

T_i = Average temperature of gas at inlet, °K (°R).

Vol_i = Sample volume collected for run i of n, scm (scf).

$\overline{v}$ = Average gas velocity at the measurement site(s), m/s (ft/s)

Q_o = Total baghouse exhaust volumetric flow rate, m^3/sec (ft^3/sec).

Q_d = Dilution air flow rate, m^3/sec (ft^3/sec).

Tamb = Ambient Temperature, (°K).

12.2 Average Gas Velocity. When following Section 8.3.1, calculate the average gas velocity at the measurement site as follows:

$$\overline{v} = \frac{Q_o}{A_o} \qquad \text{Eq. 5D-1}$$

12.3 Volumetric Flow Rate. Total volumetric flow rate may be determined as follows:

$$Q_o = Q_i + Q_d \qquad \text{Eq. 5D-2}$$

12.4 Dilution Air Flow Rate.

$$Q_d = \frac{Q_i\left(T_i - T_o\right)}{T_o - T_{amb}} \qquad \text{Eq. 5D-3}$$

12.5 Average PM Concentration. For multiple measurement sites, calculate the average PM concentration as follows:

$$C_{avg} \text{ or } \overline{C} = \frac{\sum_{i=1}^{n} m_i}{\sum_{i=1}^{n} Vol_i} \qquad \text{Eq. 5D-4}$$

13.0 Method Performance. [Reserved]

14.0 Pollution Prevention. [Reserved]

15.0 Waste Management. [Reserved]

16.0 References

Same as Method 5, Section 17.0.

17.0 Tables, Diagrams, Flowcharts, and Validation Data

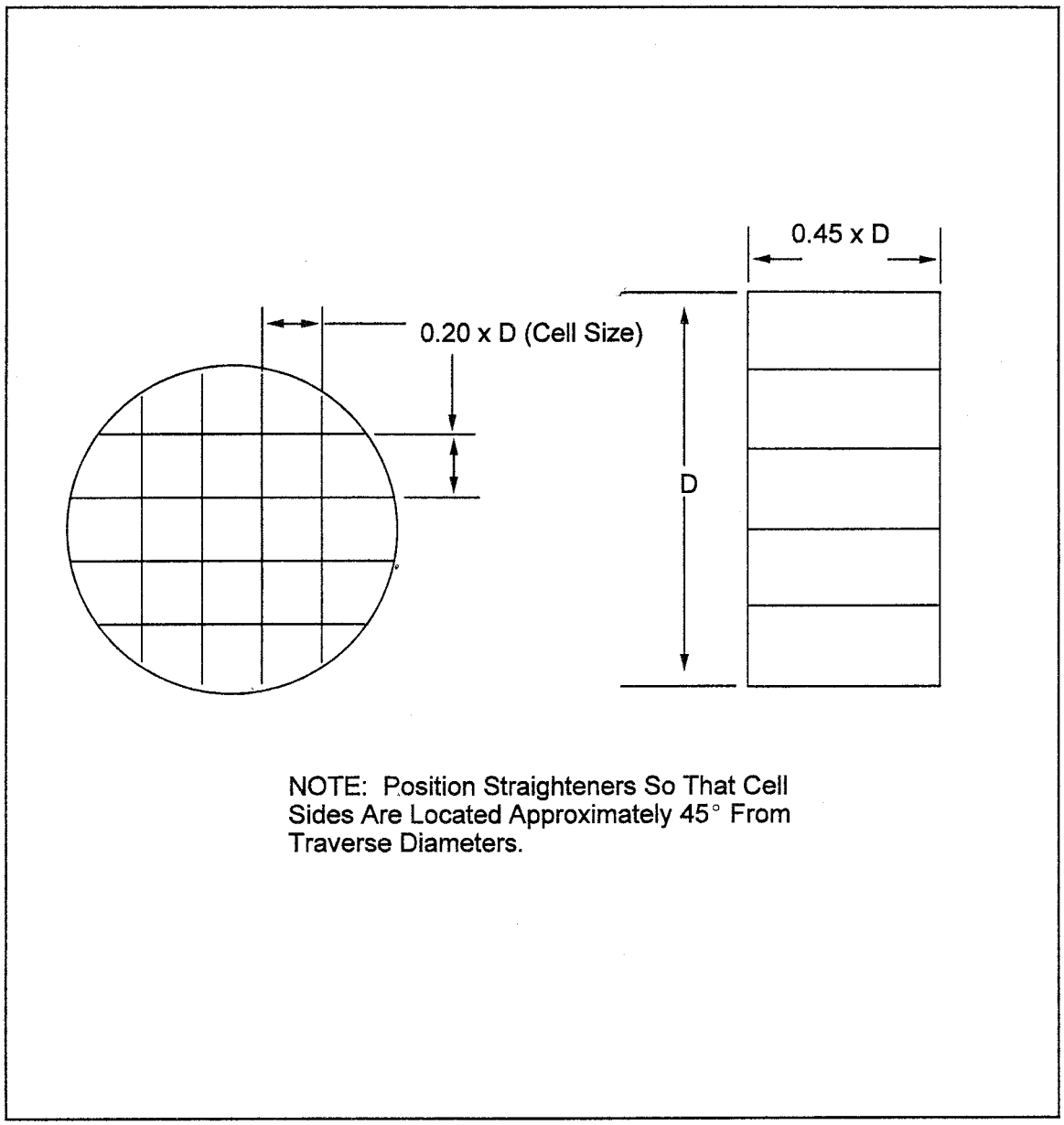

Figure 5D-1. Example of Flow Straightening Vanes.

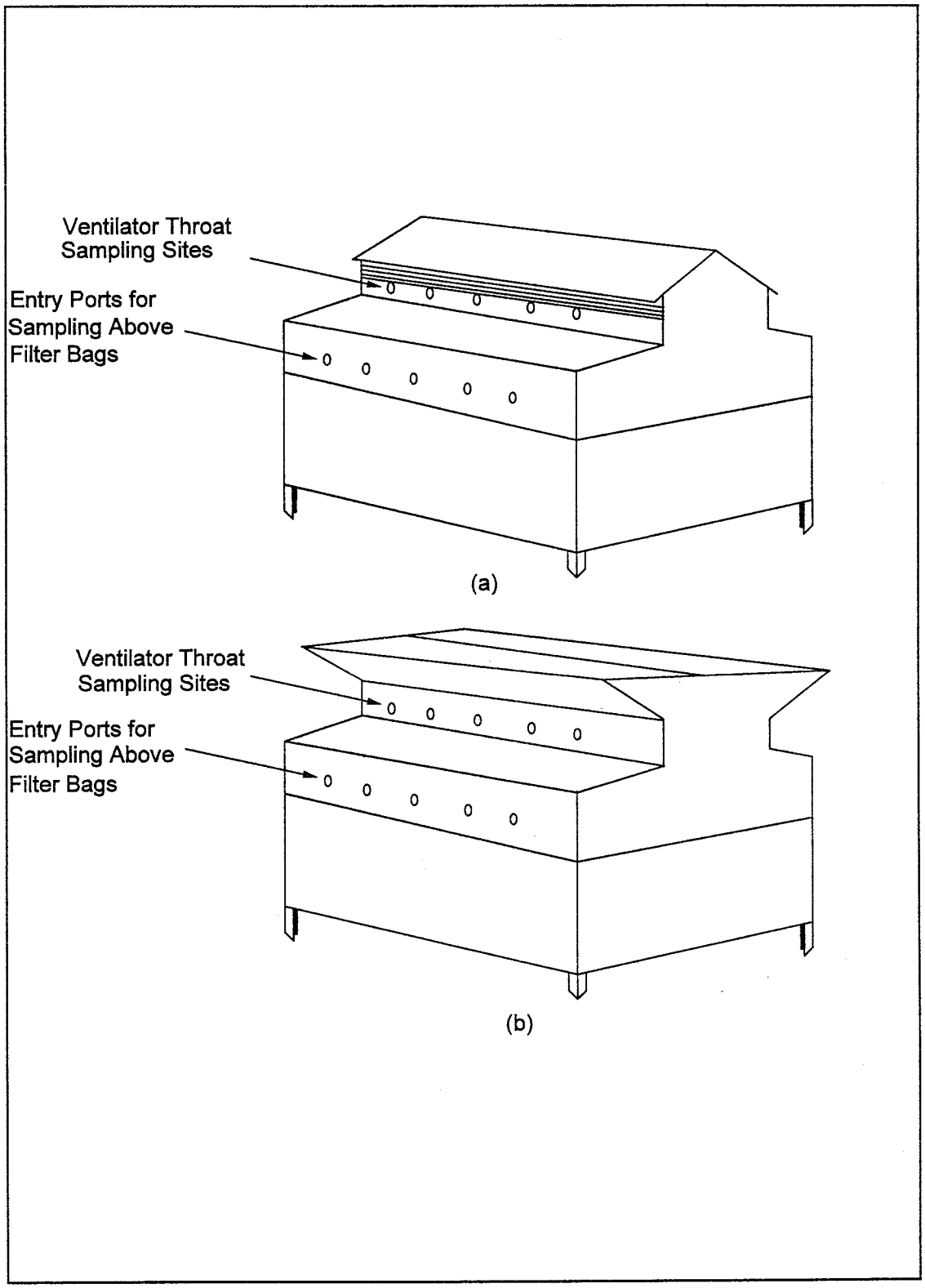

Figure 5D-2. Acceptable Sampling Site Locations for: (a) Peaked Roof; and (b) Ridge Vent Type Fabric Filters

Method 5E—Determination of Particulate Matter Emissions From the Wool Fiberglass Insulation Manufacturing Industry

Note: This method does not include all of the specifications (*e.g.*, equipment and supplies) and procedures (*e.g.*, sampling and analytical) essential to its performance. Some material is incorporated by reference from other methods in this part. Therefore, to obtain reliable results, persons using this method should have a thorough knowledge of at least the following additional test methods: Method 1, Method 2, Method 3, and Method 5.

1.0 Scope and Applications

1.1 Analyte. Particulate matter (PM). No CAS number assigned.

1.2 Applicability. This method is applicable for the determination of PM emissions from wool fiberglass insulation manufacturing sources.

2.0 Summary of Method

Particulate matter is withdrawn isokinetically from the source and is collected either on a glass fiber filter maintained at a temperature in the range of 120 ± 14°C (248 ± 25°F) and in impingers in solutions of 0.1 N sodium hydroxide (NaOH). The filtered particulate mass, which includes any material that condenses at or above the filtration temperature, is determined gravimetrically after the removal of uncombined water. The condensed PM collected in the impinger solutions is determined as total organic carbon (TOC) using a nondispersive infrared type of analyzer. The sum of the filtered PM mass and the condensed PM is reported as the total PM mass.

3.0 Definitions [Reserved]

4.0 Interferences [Reserved]

5.0 Safety

5.1 Disclaimer. This method may involve hazardous materials, operations, and equipment. This test method may not address all of the safety problems associated with its use. It is the responsibility of the user of this test method to establish appropriate safety and health practices and to determine the applicability of regulatory limitations prior to performing this test method.

5.2 Corrosive Reagents. The following reagents are hazardous. Personal protective equipment and safe procedures are useful in preventing chemical splashes. If contact occurs, immediately flush with copious amounts of water at least 15 minutes. Remove clothing under shower and decontaminate. Treat residual chemical burn as thermal burn.

5.2.1 Hydrochloric Acid (HCl). Highly toxic. Vapors are highly irritating to eyes, skin, nose, and lungs, causing severe damage. May cause bronchitis, pneumonia, or edema of lungs. Exposure to concentrations of 0.13 to 0.2 percent in air can be lethal in minutes. Will react with metals, producing hydrogen.

5.2.2 Sodium Hydroxide (NaOH). Causes severe damage to eye tissues and to skin. Inhalation causes irritation to nose, throat, and lungs. Reacts exothermically with limited amounts of water.

6.0 Equipment and Supplies

6.1 Sample Collection. Same as Method 5, Section 6.1, with the exception of the following:

6.1.1 Probe Liner. Same as described in Section 6.1.1.2 of Method 5 except use only borosilicate or quartz glass liners.

6.1.2 Filter Holder. Same as described in Section 6.1.1.5 of Method 5 with the addition of a leak-tight connection in the rear half of the filter holder designed for insertion of a temperature sensor used for measuring the sample gas exit temperature.

6.2 Sample Recovery. Same as Method 5, Section 6.2, except three wash bottles are needed instead of two and only glass storage bottles and funnels may be used.

6.3 Sample Analysis. Same as Method 5, Section 6.3, with the additional equipment for TOC analysis as described below:

6.3.1 Sample Blender or Homogenizer. Waring type or ultrasonic.

6.3.2 Magnetic Stirrer.

6.3.3 Hypodermic Syringe. 0- to 100-µl capacity.

6.3.4 Total Organic Carbon Analyzer. Rosemount Model 2100A analyzer or equivalent and a recorder.

6.3.5 Beaker. 30-ml.

6.3.6 Water Bath. Temperature controlled.

6.3.7 Volumetric Flasks. 1000-ml and 500-ml.

7.0 Reagents and Standards

Unless otherwise indicated, it is intended that all reagents conform to the specifications established by the Committee on Analytical Reagents of the American Chemical Society, where such specifications are available; otherwise, use the best available grade.

7.1 Sample Collection. Same as Method 5, Section 7.1, with the addition of 0.1 N NaOH (Dissolve 4 g of NaOH in water and dilute to 1 liter).

7.2 Sample Recovery. Same as Method 5, Section 7.2, with the addition of the following:

7.2.1 Water. Deionized distilled to conform to ASTM Specification D 1193–77 or 91 Type 3 (incorporated by reference—see § 60.17). The potassium permanganate ($KMnO_4$) test for oxidizable organic matter may be omitted when high concentrations of organic matter are not expected to be present.

7.2.2 Sodium Hydroxide. Same as described in Section 7.1.

7.3 Sample Analysis. Same as Method 5, Section 7.3, with the addition of the following:

7.3.1 Carbon Dioxide-Free Water. Distilled or deionized water that has been freshly boiled for 15 minutes and cooled to room temperature while preventing exposure to ambient air by using a cover vented with an Ascarite tube.

7.3.2 Hydrochloric Acid. HCl, concentrated, with a dropper.

7.3.3 Organic Carbon Stock Solution. Dissolve 2.1254 g of dried potassium biphthalate ($HOOCC_6H_4COOK$) in CO_2-free water, and dilute to 1 liter in a volumetric flask. This solution contains 1000 mg/L organic carbon.

7.3.4 Inorganic Carbon Stock Solution. Dissolve 4.404 g anhydrous sodium carbonate (Na_2CO_3.) in about 500 ml of CO_2-free water in a 1-liter volumetric flask. Add 3.497 g anhydrous sodium bicarbonate ($NaHCO_3$) to the flask, and dilute to 1 liter with CO_2 -free water. This solution contains 1000 mg/L inorganic carbon.

7.3.5 Oxygen Gas. CO_2 -free.

8.0 Sample Collection, Preservation, Storage, and Transport

8.1 Pretest Preparation and Preliminary Determinations. Same as Method 5, Sections 8.1 and 8.2, respectively.

8.2 Preparation of Sampling Train. Same as Method 5, Section 8.3, except that 0.1 N NaOH is used in place of water in the impingers. The volumes of the solutions are the same as in Method 5.

8.3 Leak-Check Procedures, Sampling Train Operation, Calculation of Percent Isokinetic. Same as Method 5, Sections 8.4 through 8.6, respectively.

8.4 Sample Recovery. Same as Method 5, Sections 8.7.1 through 8.7.4, with the addition of the following:

8.4.1 Save portions of the water, acetone, and 0.1 N NaOH used for cleanup as blanks. Take 200 ml of each liquid directly from the wash bottles being used, and place in glass sample containers labeled ''water blank,'' ''acetone blank,'' and ''NaOH blank,'' respectively.

8.4.2 Inspect the train prior to and during disassembly, and note any abnormal conditions. Treat the samples as follows:

8.4.2.1 Container No. 1. Same as Method 5, Section 8.7.6.1.

8.4.2.2 Container No. 2. Use water to rinse the sample nozzle, probe, and front half of the filter holder three times in the manner described in Section 8.7.6.2 of Method 5 except that no brushing is done. Put all the water wash in one container, seal, and label.

8.4.2.3 Container No. 3. Rinse and brush the sample nozzle, probe, and front half of the filter holder with acetone as described for Container No. 2 in Section 8.7.6.2 of Method 5.

8.4.2.4 Container No. 4. Place the contents of the silica gel impinger in its original container as described for Container No. 3 in Section 8.7.6.3 of Method 5.

8.4.2.5 Container No. 5. Measure the liquid in the first three impingers and record the volume or weight as described for the Impinger Water in Section 8.7.6.4 of Method 5. Do not discard this liquid, but place it in a sample container using a glass funnel to aid in the transfer from the impingers or graduated cylinder (if used) to the sample container. Rinse each impinger thoroughly with 0.1 N NaOH three times, as well as the graduated cylinder (if used) and the funnel, and put these rinsings in the same sample container. Seal the container and label to clearly identify its contents.

8.5 Sample Transport. Whenever possible, containers should be shipped in such a way that they remain upright at all times.

9.0 Quality Control.

9.1 Miscellaneous Quality Control Measures.

Section	Quality control measure	Effect
8.3, 10.0	Sampling equipment leak-check and calibration.	Ensures accurate measurement of stack gas flow rate, sample volume.
10.1.2, 11.2.5.3	Repetitive analyses	Ensures precise measurement of total carbon and inorganic carbon concentration of samples, blank, and standards.
10.1.4	TOC analyzer calibration	Ensures linearity of analyzer response to standards.

9.2 Volume Metering System Checks. Same as Method 5, Section 9.2.

10.0 Calibration and Standardization

Same as Method 5, Section 10.0, with the addition of the following procedures for calibrating the total organic carbon analyzer:

10.1 Preparation of Organic Carbon Standard Curve.

10.1.1 Add 10 ml, 20 ml, 30 ml, 40 ml, and 50 ml of the organic carbon stock solution to a series of five 1000-ml volumetric flasks. Add 30 ml, 40 ml, and 50 ml of the same solution to a series of three 500-ml volumetric flasks. Dilute the contents of each flask to the mark using CO_2-free water. These flasks contain 10, 20, 30, 40, 50, 60, 80, and 100 mg/L organic carbon, respectively.

10.1.2 Use a hypodermic syringe to withdraw a 20- to 50-µl aliquot from the 10 mg/L standard solution and inject it into the total carbon port of the analyzer. Measure the peak height. Repeat the injections until three consecutive peaks are obtained within 10 percent of their arithmetic mean. Repeat this procedure for the remaining organic carbon standard solutions.

10.1.3 Calculate the corrected peak height for each standard by deducting the blank correction (see Section 11.2.5.3) as follows:

$$\text{Corrected Peak Height} = A - B \qquad \text{Eq. 5E-1}$$

Where:

A = Peak height of standard or sample, mm or other appropriate unit.

B = Peak height of blank, mm or other appropriate unit.

10.1.4 Prepare a linear regression plot of the arithmetic mean of the three consecutive peak heights obtained for each standard solution against the concentration of that solution. Calculate the calibration factor as the inverse of the slope of this curve. If the product of the arithmetic mean peak height for any standard solution and the calibration factor differs from the actual concentration by more than 5 percent, remake and reanalyze that standard.

10.2 Preparation of Inorganic Carbon Standard Curve. Repeat the procedures outlined in Sections 10.1.1 through 10.1.4, substituting the inorganic carbon stock solution for the organic carbon stock solution, and the inorganic carbon port of the analyzer for the total carbon port.

11.0 Analytical Procedure

11.1 Record the data required on a sheet such as the one shown in Figure 5–6 of Method 5.

11.2 Handle each sample container as follows:

11.2.1 Container No. 1. Same as Method 5, Section 11.2.1, except that the filters must be dried at 20 ± 6 °C (68 ± 10 °F) and ambient pressure.

11.2.2 Containers No. 2 and No. 3. Same as Method 5, Section 11.2.2, except that evaporation of the samples must be at 20 ± 6 °C (68 ± 10 °F) and ambient pressure.

11.2.3 Container No. 4. Same as Method 5, Section 11.2.3.

11.2.4 ''Water Blank'' and ''Acetone Blank'' Containers. Determine the water and acetone blank values following the procedures for the ''Acetone Blank'' container in Section 11.2.4 of Method 5. Evaporate the samples at ambient temperature (20 ± 6 °C (68 ± 10 °F)) and pressure.

11.2.5 Container No. 5. For the determination of total organic carbon, perform two analyses on successive identical samples, *i.e.*, total carbon and inorganic carbon. The desired quantity is the difference between the two values obtained. Both analyses are based on conversion of sample carbon into carbon dioxide for measurement by a nondispersive infrared analyzer. Results of analyses register as peaks on a strip chart recorder.

11.2.5.1 The principal differences between the operating parameters for the two channels involve the combustion tube packing material and temperature. In the total carbon channel, a high temperature (950 °C (1740 °F)) furnace heats a Hastelloy combustion tube packed with cobalt oxide-impregnated asbestos fiber. The oxygen in the carrier gas, the elevated temperature, and the catalytic effect of the packing result in oxidation of both organic and inorganic carbonaceous material to CO_2, and steam. In the

inorganic carbon channel, a low temperature (150 °C (300 °F)) furnace heats a glass tube containing quartz chips wetted with 85 percent phosphoric acid. The acid liberates CO_2 and steam from inorganic carbonates. The operating temperature is below that required to oxidize organic matter. Follow the manufacturer's instructions for assembly, testing, calibration, and operation of the analyzer.

11.2.5.2 As samples collected in 0.1 N NaOH often contain a high measure of inorganic carbon that inhibits repeatable determinations of TOC, sample pretreatment is necessary. Measure and record the liquid volume of each sample (or impinger contents). If the sample contains solids or immiscible liquid matter, homogenize the sample with a blender or ultrasonics until satisfactory repeatability is obtained. Transfer a representative portion of 10 to 15 ml to a 30-ml beaker, and acidify with about 2 drops of concentrated HCl to a pH of 2 or less. Warm the acidified sample at 50 °C (120 °F) in a water bath for 15 minutes.

11.2.5.3 While stirring the sample with a magnetic stirrer, use a hypodermic syringe to withdraw a 20-to 50-µ1 aliquot from the beaker. Analyze the sample for total carbon and calculate its corrected mean peak height according to the procedures outlined in Sections 10.1.2 and 10.1.3. Similarly analyze an aliquot of the sample for inorganic carbon. Repeat the analyses for all the samples and for the 0.1 N NaOH blank.

11.2.5.4 Ascertain the total carbon and inorganic carbon concentrations (C_{TC} and C_{IC}, respectively) of each sample and blank by comparing the corrected mean peak heights for each sample and blank to the appropriate standard curve.

Note: If samples must be diluted for analysis, apply an appropriate dilution factor.

12.0 Data Analysis and Calculations

Same as Method 5, Section 12.0, with the addition of the following:

12.1 Nomenclature.

C_c = Concentration of condensed particulate matter in stack gas, gas dry basis, corrected to standard conditions, g/dscm (gr/dscf).

C_{IC} = Concentration of condensed TOC in the liquid sample, from Section 11.2.5, mg/L.

C_t = Total particulate concentration, dry basis, corrected to standard conditions, g/dscm (gr/dscf).

C_{TC} = Concentration of condensed TOC in the liquid sample, from Section 11.2.5, mg/L.

C_{TOC} = Concentration of condensed TOC in the liquid sample, mg/L.

m_{TOC} = Mass of condensed TOC collected in the impingers, mg.

$V_{m(std)}$ = Volume of gas sample measured by the dry gas meter, corrected to standard conditions, from Section 12.3 of Method 5, dscm (dscf).

V_s = Total volume of liquid sample, ml.

12.2 Concentration of Condensed TOC in Liquid Sample.

$$C_{TOC} = C_{TC} - C_{IC} \qquad \text{Eq. 5E-2}$$

12.3 Mass of Condensed TOC Collected.

$$m_{TOC} = 0.001\, C_{TOC} V_s \qquad \text{Eq. 5E-3}$$

Where:

0.001 = Liters per milliliter.

12.4 Concentration of Condensed Particulate Material.

$$C_c = K_4 m_{TOC} / V_{m(std)} \qquad \text{Eq. 5E-4}$$

Where:

K_4 = 0.001 g/mg for metric units.
= 0.0154 gr/mg for English units.

12.5 Total Particulate Concentration.

$$C_t = C_s + C_c \qquad \text{Eq. 5E-4}$$

13.0 Method Performance. [Reserved]

14.0 Pollution Prevention. [Reserved]

15.0 Waste Management. [Reserved]

16.0 References.

Same as Section 17.0 of Method 5, with the addition of the following:

1. American Public Health Association, American Water Works Association, Water Pollution Control Federation. Standard Methods for the Examination of Water and Wastewater. Fifteenth Edition. Washington, D.C. 1980.

17.0 Tables, Diagrams, Flowcharts, and Validation Data. [Reserved]

Method 5F—Determination of Nonsulfate Particulate Matter Emissions From Stationary Sources

Note: This method does not include all of the specifications (*e.g.,* equipment and supplies) and procedures (*e.g.,* sampling and analytical) essential to its performance. Some material is incorporated by reference from other methods in this part. Therefore, to obtain reliable results, persons using this method should have a thorough knowledge of at least the following additional test methods: Method 1, Method 2, Method 3, and Method 5.

1.0 Scope and Applications

1.1 Analyte. Nonsulfate particulate matter (PM). No CAS number assigned.

1.2 Applicability. This method is applicable for the determination of nonsulfate PM emissions from stationary sources. Use of this method must be specified by an applicable subpart of the standards, or approved by the Administrator for a particular application.

1.3 Data Quality Objectives. Adherence to the requirements of this method will enhance the quality of the data obtained from air pollutant sampling methods.

2.0 Summary of Method

Particulate matter is withdrawn isokinetically from the source and collected on a filter maintained at a temperature in the range 160 ± 14 °C (320 ± 25 °F). The collected sample is extracted with water. A portion of the extract is analyzed for sulfate content by ion chromatography. The remainder is neutralized with ammonium hydroxide (NH_4OH), dried, and weighed. The weight of sulfate in the sample is calculated as ammonium sulfate ($(NH_4)_2SO_4$), and is subtracted from the total particulate weight; the result is reported as nonsulfate particulate matter.

3.0 Definitions [Reserved]

4.0 Interferences [Reserved]

5.0 Safety

5.1 Disclaimer. This method may involve hazardous materials, operations, and equipment. This test method may not address all of the safety problems associated with its use. It is the responsibility of the user of this test method to establish appropriate safety and health practices and to determine the applicability of regulatory limitations prior to performing this test method.

6.0 Equipment and Supplies

6.1 Sample Collection and Recovery. Same as Method 5, Sections 6.1 and 6.2, respectively.

6.2 Sample Analysis. Same as Method 5, Section 6.3, with the addition of the following:

6.2.1 Erlenmeyer Flasks. 125-ml, with ground glass joints.

6.2.2 Air Condenser. With ground glass joint compatible with the Erlenmeyer flasks.

6.2.3 Beakers. 600-ml.

6.2.4 Volumetric Flasks. 1-liter, 500-ml (one for each sample), 200-ml, and 50-ml (one for each sample and standard).

6.2.5 Pipet. 5-ml (one for each sample and standard).

6.2.6 Ion Chromatograph. The ion chromatograph should have at least the following components.

6.2.6.1 Columns. An anion separation column or other column

capable of resolving the sulfate ion from other species present and a standard anion suppressor column. Suppressor columns are produced as proprietary items; however, one can be produced in the laboratory using the resin available from BioRad Company, 32nd and Griffin Streets, Richmond, California. Other systems which do not use suppressor columns may also be used.

6.2.6.2 Pump. Capable of maintaining a steady flow as required by the system.

6.2.6.3 Flow Gauges. Capable of measuring the specified system flow rate.

6.2.6.4 Conductivity Detector.

6.2.6.5 Recorder. Compatible with the output voltage range of the detector.

7.0 Reagents and Standards

Unless otherwise indicated, it is intended that all reagents conform to the specifications established by the Committee on Analytical Reagents of the American Chemical Society, where such specifications are available; otherwise, use the best available grade.

7.1 Sample Collection. Same as Method 5, Section 7.1.

7.2 Sample Recovery. Same as Method 5, Section 7.2, with the addition of the following:

7.2.1 Water. Deionized distilled, to conform to ASTM D 1193–77 or 91 Type 3 (incorporated by reference—see § 60.17). The potassium permanganate ($KMnO_4$) test for oxidizable organic matter may be omitted when high concentrations of organic matter are not expected to be present.

7.3 Analysis. Same as Method 5, Section 7.3, with the addition of the following:

7.3.1 Water. Same as in Section 7.2.1.

7.3.2 Stock Standard Solution, 1 mg $(NH_4)_2SO_4$/ml. Dry an adequate amount of primary standard grade ammonium sulfate ($(NH_4)_2SO_4$) at 105 to 110 °C (220 to 230 °F) for a minimum of 2 hours before preparing the standard solution. Then dissolve exactly 1.000 g of dried $(NH_4)_2SO_4$ in water in a 1-liter volumetric flask, and dilute to 1 liter. Mix well.

7.3.3 Working Standard Solution, 25 µg $(NH_4)_2SO_4$/ml. Pipet 5 ml of the stock standard solution into a 200-ml volumetric flask. Dilute to 200 ml with water.

7.3.4 Eluent Solution. Weigh 1.018 g of sodium carbonate (Na_2CO_3) and 1.008 g of sodium bicarbonate ($NaHCO_3$), and dissolve in 4 liters of water. This solution is 0.0024 M Na_2CO_3/0.003 M $NaHCO_3$. Other eluents appropriate to the column type and capable of resolving sulfate ion from other species present may be used.

7.3.5 Ammonium Hydroxide. Concentrated, 14.8 M.

7.3.6 Phenolphthalein Indicator. 3,3-Bis(4-hydroxyphenyl)-1-(3H)-isobenzofuranone. Dissolve 0.05 g in 50 ml of ethanol and 50 ml of water.

8.0 Sample Collection, Preservation, Storage, and Transport

Same as Method 5, Section 8.0, with the exception of the following:

8.1 Sampling Train Operation. Same as Method 5, Section 8.5, except that the probe outlet and filter temperatures shall be maintained at 160 ± 14 °C (320 ± 25 °F).

8.2 Sample Recovery. Same as Method 5, Section 8.7, except that the recovery solvent shall be water instead of acetone, and a clean filter from the same lot as those used during testing shall be saved for analysis as a blank.

9.0 Quality Control

9.1 Miscellaneous Quality Control Measures

Section	Quality control measure	Effect
8.3, 10.0	Sampling equipment leak check and calibration.	Ensures accurate measurement of stack gas flow rate, sample volume.
10.1.2, 11.2.5.3	Repetitive analyses	Ensures precise measurement of total carbon and inorganic carbon concentration of samples, blank, and standards.

9.2 Volume Metering System Checks. Same as Method 5, Section 9.2.

10.0 Calibration and Standardization

Same as Method 5, Section 10.0, with the addition of the following:

10.1 Determination of Ion Chromatograph Calibration Factor S. Prepare a series of five standards by adding 1.0, 2.0, 4.0, 6.0, and 10.0 ml of working standard solution (25 µg/ml) to a series of five 50-ml volumetric flasks. (The standard masses will equal 25, 50, 100, 150, and 250 µg.) Dilute each flask to the mark with water, and mix well. Analyze each standard according to the chromatograph manufacturer's instructions. Take peak height measurements with symmetrical peaks; in all other cases, calculate peak areas. Prepare or calculate a linear regression plot of the standard masses in µg (x-axis) versus their responses (y-axis). From this line, or equation, determine the slope and calculate its reciprocal which is the calibration factor, S. If any point deviates from the line by more than 7 percent of the concentration at that point, remake and reanalyze that standard. This deviation can be determined by multiplying S times the response for each standard. The resultant concentrations must not differ by more than 7 percent from each known standard mass (*i.e.*, 25, 50, 100, 150, and 250 µg).

10.2 Conductivity Detector. Calibrate according to manufacturer's specifications prior to initial use.

11.0 Analytical Procedure

11.1 Sample Extraction.

11.1.1 Note on the analytical data sheet, the level of the liquid in the container, and whether any sample was lost during shipment. If a noticeable amount of leakage has occurred, either void the sample or use methods, subject to the approval of the Administrator, to correct the final results.

11.1.2 Cut the filter into small pieces, and place it in a 125-ml Erlenmeyer flask with a ground glass joint equipped with an air condenser. Rinse the shipping container with water, and pour the rinse into the flask. Add additional water to the flask until it contains about 75 ml, and place the flask on a hot plate. Gently reflux the contents for 6 to 8 hours. Cool the solution, and transfer it to a 500-ml volumetric flask. Rinse the Erlenmeyer flask with water, and transfer the rinsings to the volumetric flask including the pieces of filter.

11.1.3 Transfer the probe rinse to the same 500-ml volumetric flask with the filter sample. Rinse the sample bottle with water, and add the rinsings to the volumetric flask. Dilute the contents of the flask to the mark with water.

11.1.4 Allow the contents of the flask to settle until all solid material is at the bottom of the flask. If necessary, remove and centrifuge a portion of the sample.

11.1.5 Repeat the procedures outlined in Sections 11.1.1 through 11.1.4 for each sample and for the filter blank.

11.2 Sulfate (SO_4) Analysis.

11.2.1 Prepare a standard calibration curve according to the procedures outlined in Section 10.1.

11.2.2 Pipet 5 ml of the sample into a 50-ml volumetric flask, and dilute to 50 ml with water. (Alternatively, eluent solution may be used instead of water in all sample, standard, and blank dilutions.) Analyze the set of standards followed by the set of samples, including the filter blank, using the same injection volume used for the standards.

11.2.3 Repeat the analyses of the standards and the samples, with the standard set being done last. The two peak height or peak area responses for each sample must agree within 5 percent of their arithmetic mean for the analysis to be valid. Perform this analysis sequence on the same day. Dilute any sample and the blank with equal volumes of water if the concentration exceeds that of the highest standard.

11.2.4 Document each sample chromatogram by listing the following analytical parameters: injection point, injection volume, sulfate retention time, flow rate, detector sensitivity setting, and recorder chart speed.

11.3 Sample Residue.

11.3.1 Transfer the remaining contents of the volumetric flask to a tared 600-ml beaker or similar container. Rinse the volumetric flask with water, and add the rinsings to the tared beaker. Make certain that all particulate matter is transferred to the beaker. Evaporate the water in an oven at 105 °C (220 °F) until only about 100 ml of water remains. Remove the beakers from the oven, and allow them to cool.

11.3.2 After the beakers have cooled, add five drops of phenolphthalein indicator, and then add concentrated ammonium hydroxide until the solution turns pink. Return the samples to the oven at 105 °C (220 °F), and evaporate the samples to dryness. Cool the samples in a desiccator, and weigh the samples to constant weight.

12.0 Data Analysis and Calculations

Same as Method 5, Section 12.0, with the addition of the following:

12.1 Nomenclature.

C_W = Water blank residue concentration, mg/ml.

F = Dilution factor (required only if sample dilution was needed to reduce the concentration into the range of calibration).

H_S = Arithmetic mean response of duplicate sample analyses, mm for height or mm2 for area.

H_b = Arithmetic mean response of duplicate filter blank analyses, mm for height or mm2 for area.

m_b = Mass of beaker used to dry sample, mg.

m_f = Mass of sample filter, mg.

m_n = Mass of nonsulfate particulate matter in the sample as collected, mg.

m_s = Mass of ammonium sulfate in the sample as collected, mg.

m_t = Mass of beaker, filter, and dried sample, mg.

m_w = Mass of residue after evaporation of water blank, mg.

S = Calibration factor, µg/mm.

V_b = Volume of water blank, ml.

V_S = Volume of sample collected, 500 ml.

12.2 Water Blank Concentration.

$$C_w = \frac{m_w}{V_b} \qquad \text{Eq. 5F-1}$$

12.3 Mass of Ammonium Sulfate.

$$m_s = \frac{(99)\, S\left(H_s - H_b\right)}{(1000)} F \qquad \text{Eq. 5F-2}$$

Where:

100 = Aliquot factor, 495 ml/5 ml

1000 = Constant, µg/mg

12.4 Mass of Nonsulfate Particulate Matter.

$$m_n = m_t - m_b - m_s - m_f - V_s C_w \qquad \text{Eq. 5F-3}$$

13.0 Method Performance. [Reserved]

14.0 Pollution Prevention. [Reserved]

15.0 Waste Management. [Reserved]

16.0 Alternative Procedures

16.1 The following procedure may be used as an alternative to the procedure in Section 11.0

16.1.1 Apparatus. Same as for Method 6, Sections 6.3.3 to 6.3.6 with the following additions.

16.1.1.1 Beakers. 250-ml, one for each sample, and 600-ml.

16.1.1.2 Oven. Capable of maintaining temperatures of 75 ± 5 °C (167 ± 9 °F) and 105 ± 5 °C (221 ± 9 °F).

16.1.1.3 Buchner Funnel.

16.1.1.4 Glass Columns. 25-mm x 305-mm (1-in. x 12-in.) with Teflon stopcock.

16.1.1.5 Volumetric Flasks. 50-ml and 500-ml, one set for each sample, and 100-ml, 200-ml, and 1000-ml.

16.1.1.6 Pipettes. Two 20-ml and one 200-ml, one set for each sample, and 5-ml.

16.1.1.7 Filter Flasks. 500-ml.

16.1.1.8 Polyethylene Bottle. 500-ml, one for each sample.

16.1.2 Reagents. Same as Method 6, Sections 7.3.2 to 7.3.5 with the following additions:

16.1.2.1 Water, Ammonium Hydroxide, and Phenolphthalein. Same as Sections 7.2.1, 7.3.5, and 7.3.6 of this method, respectively.

16.1.2.2 Filter. Glass fiber to fit Buchner funnel.

16.1.2.3 Hydrochloric Acid (HCl), 1 m. Add 8.3 ml of concentrated HCl (12 M) to 50 ml of water in a 100-ml volumetric flask. Dilute to 100 ml with water.

16.1.2.4 Glass Wool.

16.1.2.5 Ion Exchange Resin. Strong cation exchange resin, hydrogen form, analytical grade.

16.1.2.6 pH Paper. Range of 1 to 7.

16.1.3 Analysis.

16.1.3.1 Ion Exchange Column Preparation. Slurry the resin with 1 M HCl in a 250-ml beaker, and allow to stand overnight. Place 2.5 cm (1 in.) of glass wool in the bottom of the glass column. Rinse the slurried resin twice with water. Resuspend the resin in water, and pour sufficient resin into the column to make a bed 5.1 cm (2 in.) deep. Do not allow air bubbles to become entrapped in the resin or glass wool to avoid channeling, which may produce erratic results. If necessary, stir the resin with a glass rod to remove air bubbles, after the column has been prepared, never let the liquid level fall below the top of the upper glass wool plug. Place a 2.5-cm (1-in.) plug of glass wool on top of the resin. Rinse the column with water until the eluate gives a pH of 5 or greater as measured with pH paper.

16.1.3.2 Sample Extraction. Followup the procedure given in Section 11.1.3 except do not dilute the sample to 500 ml.

16.1.3.3 Sample Residue.

16.1.3.3.1 Place at least one clean glass filter for each sample in a Buchner funnel, and rinse the filters with water. Remove the filters from the funnel, and dry them in an oven at 105 ± 5° C (221 ± 9 °F); then cool in a desiccator. Weigh each filter to constant weight according to the procedure in Method 5, Section 11.0. Record the weight of each filter to the nearest 0.1 mg.

16.1.3.3.2 Assemble the vacuum filter apparatus, and place one of the clean, tared glass fiber filters in the Buchner funnel. Decant the liquid portion of the extracted sample (Section 16.1.3.2) through the tared glass fiber filter into a clean, dry, 500-ml filter flask. Rinse all the particulate matter remaining in the volumetric flask onto the glass fiber filter with water. Rinse the particulate matter with additional water. Transfer the filtrate to a 500-ml volumetric flask, and dilute to 500 ml with water. Dry the filter overnight at 105 ± 5° C (221 ± 9°F), cool in a desiccator, and weigh to the nearest 0.1 mg.

16.1.3.3.3 Dry a 250-ml beaker at 75 ± 5° C (167 ± 9° F), and cool in a desiccator; then weigh to constant weight to the nearest 0.1 mg. Pipette 200 ml of the filtrate that was saved into a tared 250-ml beaker; add five drops of phenolphthalein indicator and sufficient concentrated ammonium hydroxide to turn the solution pink. Carefully evaporate the contents of the beaker to dryness at 75 ± 5° C (167 ± 9° F). Check for dryness every 30 minutes. Do not continue to bake the sample once it has dried. Cool the sample in a desiccator, and weigh to constant weight to the nearest 0.1 mg.

16.1.3.4 Sulfate Analysis. Adjust the flow rate through the ion exchange column to 3 ml/min. Pipette a 20-ml aliquot of the filtrate onto the top of the ion exchange column, and collect the eluate in a 50-ml volumetric flask. Rinse the column with two 15-ml portions of water. Stop collection of the eluate when the volume in the flask reaches 50-ml. Pipette a 20-ml aliquot of the eluate into a 250-ml Erlenmeyer flask, add 80 ml of 100 percent isopropanol and two to four drops of thorin indicator, and titrate to a pink end point using 0.0100 N barium perchlorate. Repeat and average the titration volumes. Run a blank with each series of samples. Replicate titrations must agree within 1 percent or 0.2 ml, whichever is larger. Perform the ion exchange and titration procedures on duplicate portions of the filtrate. Results should agree within 5 percent. Regenerate or replace the ion exchange resin after 20 sample aliquots have been analyzed or if the end point of the titration becomes unclear.

Note: Protect the 0.0100 N barium perchlorate solution from evaporation at all times.

16.1.3.5 Blank Determination. Begin with a sample of water of the same volume as the samples being processed and carry it through the analysis steps described in Sections 16.1.3.3 and 16.1.3.4. A blank value larger than 5 mg should not be subtracted from the final particulate matter mass. Causes for large blank values should be investigated and any problems resolved before proceeding with further analyses.

16.1.4 Calibration. Calibrate the barium perchlorate solutions as in Method 6, Section 10.5.

16.1.5 Calculations.

16.1.5.1 Nomenclature. Same as Section 12.1 with the following additions:

m_a = Mass of clean analytical filter, mg.
m_d = Mass of dissolved particulate matter, mg.
m_e = Mass of beaker and dissolved particulate matter after evaporation of filtrate, mg.
m_p = Mass of insoluble particulate matter, mg.
m_r = Mass of analytical filter, sample filter, and insoluble particulate matter, mg.
m_{bk} = Mass of nonsulfate particulate matter in blank sample, mg.
m_n = Mass of nonsulfate particulate matter, mg.
m_s = Mass of Ammonium sulfate, mg.
N = Normality of $Ba(ClO_4)$ titrant, meq/ml.
V_a = Volume of aliquot taken for titration, 20 ml.
V_c = Volume of titrant used for titration blank, ml.
V_d = Volume of filtrate evaporated, 200 ml.
V_e = Volume of eluate collected, 50 ml.
V_f = Volume of extracted sample, 500 ml.
V_i = Volume of filtrate added to ion exchange column, 20 ml.
V_t = Volume of $Ba(C10_4)_2$ titrant, ml.
W = Equivalent weight of ammonium sulfate, 66.07 mg/meq.

16.1.5.2 Mass of Insoluble Particulate Matter.

$$m_p = m_r - m_a - m_f \qquad \text{Eq. 5F-4}$$

16.1.5.3 Mass of Dissolved Particulate Matter.

$$m_d = \left(m_e - \left(V_f / V_d\right) m_b\right) \qquad \text{Eq. 5F-5}$$

16.1.5.4 Mass of Ammonium Sulfate.

$$m_s = \frac{\left(V_t - V_c\right) N\, W\, V_e V_f}{V_a V_i} \qquad \text{Eq. 5F-6}$$

16.1.5.5 Mass of Nonsulfate Particulate Matter.

$$m_n = m_p + m_d - m_s - m_{bk} \qquad \text{Eq. 5F-7}$$

17.0 References

Same as Method 5, Section 17.0, with the addition of the following:

1. Mulik, J.D. and E. Sawicki. Ion Chromatographic Analysis of Environmental Pollutants. Ann Arbor, Ann Arbor Science Publishers, Inc. Vol. 2, 1979.
2. Sawicki, E., J.D. Mulik, and E. Wittgenstein. Ion Chromatographic Analysis of Environmental Pollutants. Ann Arbor, Ann Arbor Science Publishers, Inc. Vol. 1. 1978.
3. Siemer, D.D. Separation of Chloride and Bromide from Complex Matrices Prior to Ion Chromatographic Determination. Analytical Chemistry 52(12): 1874–1877. October 1980.
4. Small, H., T.S. Stevens, and W.C. Bauman. Novel Ion Exchange Chromatographic Method Using Conductimetric Determination. Analytical Chemistry. *47*(11):1801. 1975.

18.0 Tables, Diagrams, Flowcharts, and Validation Data. [Reserved]

Method 5G—Determination of Particulate Matter Emissions From Wood Heaters (Dilution Tunnel Sampling Location)

Note: This method does not include all of the specifications (*e.g.*, equipment and supplies) and procedures (*e.g.*, sampling and analytical) essential to its performance. Some material is incorporated by reference from other methods in this part. Therefore, to obtain reliable results, persons using this method should have a thorough knowledge of at least the following additional test methods: Method 1, Method 2, Method 3, Method 4, Method 5, Method 5H, and Method 28.

1.0 Scope and Application

1.1 Analyte. Particulate matter (PM). No CAS number assigned.

1.2 Applicability. This method is applicable for the determination of PM emissions from wood heaters.

1.3 Data Quality Objectives. Adherence to the requirements of this method will enhance the quality of the data obtained from air pollutant sampling methods.

2.0 Summary of Method

2.1 The exhaust from a wood heater is collected with a total collection hood, and is combined with ambient dilution air. Particulate matter is withdrawn proportionally from a single point in a sampling tunnel, and is collected on two glass fiber filters in series. The filters are maintained at a temperature of no greater than 32 °C (90 °F). The particulate mass is determined gravimetrically after the removal of uncombined water.

2.2 There are three sampling train approaches described in this method: (1) One dual-filter dry sampling train operated at about 0.015 m^3/min (0.5 cfm), (2) One dual-filter plus impingers sampling train operated at about 0.015 m^3/min (0.5 cfm), and (3) two dual-filter dry sampling trains operated simultaneously at any flow rate. Options

(2) and (3) are referenced in Section 16.0 of this method. The dual-filter dry sampling train equipment and operation, option (1), are described in detail in this method.

3.0 Definitions [Reserved]

4.0 Interferences [Reserved]

5.0 Safety

5.1 Disclaimer. This method may involve hazardous materials, operations, and equipment. This test method may not address all of the safety problems associated with its use. It is the responsibility of the user of this test method to establish appropriate safety and health practices and to determine the applicability of regulatory limitations prior to performing this test method.

6.0 Equipment and Supplies

6.1 Sample Collection. The following items are required for sample collection:

6.1.1 Sampling Train. The sampling train configuration is shown in Figure 5G–1 and consists of the following components:

6.1.1.1 Probe. Stainless steel (*e.g.*, 316 or grade more corrosion resistant) or glass about 9.5 mm (⅜ in.) I.D., 0.6 m (24 in.) in length. If made of stainless steel, the probe shall be constructed from seamless tubing.

6.1.1.2 Pitot Tube. Type S, as described in Section 6.1 of Method 2. The Type S pitot tube assembly shall have a known coefficient, determined as outlined in Method 2, Section 10. Alternatively, a standard pitot may be used as described in Method 2, Section 6.1.2.

6.1.1.3 Differential Pressure Gauge. Inclined manometer or equivalent device, as described in Method 2, Section 6.2. One manometer shall be used for velocity head (Δp) readings and another (optional) for orifice differential pressure readings (ΔH).

6.1.1.4 Filter Holders. Two each made of borosilicate glass, stainless steel, or Teflon, with a glass frit or stainless steel filter support and a silicone rubber, Teflon, or Viton gasket. The holder design shall provide a positive seal against leakage from the outside or around the filters. The filter holders shall be placed in series with the backup filter holder located 25 to 100 mm (1 to 4 in.) downstream from the primary filter holder. The filter holder shall be capable of holding a filter with a 100 mm (4 in.) diameter, except as noted in Section 16.

6.1.1.5 Filter Temperature Monitoring System. A temperature sensor capable of measuring temperature to within ± 3 °C (± 5 °F). The sensor shall be installed at the exit side of the front filter holder so that the sensing tip of the temperature sensor is in direct contact with the sample gas or in a thermowell as shown in Figure 5G–1. The temperature sensor shall comply with the calibration specifications in Method 2, Section 10.3. Alternatively, the sensing tip of the temperature sensor may be installed at the inlet side of the front filter holder.

6.1.1.6 Dryer. Any system capable of removing water from the sample gas to less than 1.5 percent moisture (volume percent) prior to the metering system. The system shall include a temperature sensor for demonstrating that sample gas temperature exiting the dryer is less than 20 °C (68 °F).

6.1.1.7 Metering System. Same as Method 5, Section 6.1.1.9.

6.1.2 Barometer. Same as Method 5, Section 6.1.2.

6.1.3 Dilution Tunnel Gas Temperature Measurement. A temperature sensor capable of measuring temperature to within ± 3 °C (± 5 °F).

6.1.4 Dilution Tunnel. The dilution tunnel apparatus is shown in Figure 5G–2 and consists of the following components:

6.1.4.1 Hood. Constructed of steel with a minimum diameter of 0.3 m (1 ft) on the large end and a standard 0.15 to 0.3 m (0.5 to 1 ft) coupling capable of connecting to standard 0.15 to 0.3 m (0.5 to 1 ft) stove pipe on the small end.

6.1.4.2 90° Elbows. Steel 90° elbows, 0.15 to 0.3 m (0.5 to 1 ft) in diameter for connecting mixing duct, straight duct and optional damper assembly. There shall be at least two 90° elbows upstream of the sampling section (see Figure 5G–2).

6.1.4.3 Straight Duct. Steel, 0.15 to 0.3 m (0.5 to 1 ft) in diameter to provide the ducting for the dilution apparatus upstream of the sampling section. Steel duct, 0.15 m (0.5 ft) in diameter shall be used for the sampling section. In the sampling section, at least 1.2 m (4 ft) downstream of the elbow, shall be two holes (velocity traverse ports) at 90° to each other of sufficient size to allow entry of the pitot for traverse measurements. At least 1.2 m (4 ft) downstream of the velocity traverse ports, shall be one hole (sampling port) of sufficient size to allow entry of the sampling probe. Ducts of larger diameter may be used for the sampling section, provided the specifications for minimum gas velocity and the dilution rate range shown in Section 8 are maintained. The length of duct from the hood inlet to the sampling ports shall not exceed 9.1 m (30 ft).

6.1.4.4 Mixing Baffles. Steel semicircles (two) attached at 90° to the duct axis on opposite sides of the duct midway between the two elbows upstream of sampling section. The space between the baffles shall be about 0.3 m (1 ft).

6.1.4.5 Blower. Squirrel cage or other fan capable of extracting gas from the dilution tunnel of sufficient flow to maintain the velocity and dilution rate specifications in Section 8 and exhausting the gas to the atmosphere.

6.2 Sample Recovery. The following items are required for sample recovery: probe brushes, wash bottles, sample storage containers, petri dishes, and funnel. Same as Method 5, Sections 6.2.1 through 6.2.4, and 6.2.8, respectively.

6.3 Sample Analysis. The following items are required for sample analysis: glass weighing dishes, desiccator, analytical balance, beakers (250-ml or smaller), hygrometer, and temperature sensor. Same as Method 5, Sections 6.3.1 through 6.3.3 and 6.3.5 through 6.3.7, respectively.

7.0 Reagents and Standards

7.1 Sample Collection. The following reagents are required for sample collection:

7.1.1 Filters. Glass fiber filters with a minimum diameter of 100 mm (4 in.), without organic binder, exhibiting at least 99.95 percent efficiency (<0.05 percent penetration) on 0.3-micron dioctyl phthalate smoke particles. Gelman A/E 61631 has been found acceptable for this purpose.

7.1.2 Stopcock Grease. Same as Method 5, Section 7.1.5. 7.2 Sample Recovery. Acetone-reagent grade, same as Method 5, Section 7.2.

7.3 Sample Analysis. Two reagents are required for the sample analysis:

7.3.1 Acetone. Same as in Section 7.2.

7.3.2 Desiccant. Anhydrous calcium sulfate, calcium chloride, or silica gel, indicating type.

8.0 Sample Collection, Preservation, Transport, and Storage

8.1 Dilution Tunnel Assembly and Cleaning. A schematic of a dilution tunnel is shown in Figure 5G–2. The dilution tunnel dimensions and other features are described in Section 6.1.4. Assemble the dilution tunnel, sealing joints and seams to prevent air leakage. Clean the dilution tunnel with an appropriately sized wire chimney brush before each certification test.

8.2 Draft Determination. Prepare the wood heater as in Method 28, Section 6.2.1. Locate the dilution tunnel hood centrally over the wood heater stack

exhaust. Operate the dilution tunnel blower at the flow rate to be used during the test run. Measure the draft imposed on the wood heater by the dilution tunnel (*i.e.,* the difference in draft measured with and without the dilution tunnel operating) as described in Method 28, Section 6.2.3. Adjust the distance between the top of the wood heater stack exhaust and the dilution tunnel hood so that the dilution tunnel induced draft is less than 1.25 Pa (0.005 in. H_2O). Have no fire in the wood heater, close the wood heater doors, and open fully the air supply controls during this check and adjustment.

8.3 Pretest Ignition. Same as Method 28, Section 8.7.

8.4 Smoke Capture. During the pretest ignition period, operate the dilution tunnel and visually monitor the wood heater stack exhaust. Operate the wood heater with the doors closed and determine that 100 percent of the exhaust gas is collected by the dilution tunnel hood. If less than 100 percent of the wood heater exhaust gas is collected, adjust the distance between the wood heater stack and the dilution tunnel hood until no visible exhaust gas is escaping. Stop the pretest ignition period, and repeat the draft determination procedure described in Section 8.2.

8.5 Velocity Measurements. During the pretest ignition period, conduct a velocity traverse to identify the point of average velocity. This single point shall be used for measuring velocity during the test run.

8.5.1 Velocity Traverse. Measure the diameter of the duct at the velocity traverse port location through both ports. Calculate the duct area using the average of the two diameters. A pretest leak-check of pitot lines as in Method 2, Section 8.1, is recommended. Place the calibrated pitot tube at the centroid of the stack in either of the velocity traverse ports. Adjust the damper or similar device on the blower inlet until the velocity indicated by the pitot is approximately 220 m/min (720 ft/min). Continue to read the Δp and temperature until the velocity has remained constant (less than 5 percent change) for 1 minute. Once a constant velocity is obtained at the centroid of the duct, perform a velocity traverse as outlined in Method 2, Section 8.3 using four points per traverse as outlined in Method 1. Measure the Δp and tunnel temperature at each traverse point and record the readings. Calculate the total gas flow rate using calculations contained in Method 2, Section 12. Verify that the flow rate is 4 ± 0.40 dscm/min (140 ± 14 dscf/min); if not, readjust the damper, and repeat the velocity traverse. The moisture may be assumed to be 4 percent (100 percent relative humidity at 85 °F). Direct moisture measurements (*e.g.,* according to Method 4) are also permissible.

Note: If burn rates exceed 3 kg/hr (6.6 lb/hr), dilution tunnel duct flow rates greater than 4 dscm/min (140 dscfm) and sampling section duct diameters larger than 150 mm (6 in.) are allowed. If larger ducts or flow rates are used, the sampling section velocity shall be at least 220 m/min (720 fpm). In order to ensure measurable particulate mass catch, it is recommended that the ratio of the average mass flow rate in the dilution tunnel to the average fuel burn rate be less than 150:1 if larger duct sizes or flow rates are used.

8.5.2 Testing Velocity Measurements. After obtaining velocity traverse results that meet the flow rate requirements, choose a point of average velocity and place the pitot and temperature sensor at that location in the duct. Alternatively, locate the pitot and the temperature sensor at the duct centroid and calculate a velocity correction factor for the centroidal position. Mount the pitot to ensure no movement during the test run and seal the port holes to prevent any air leakage. Align the pitot opening to be parallel with the duct axis at the measurement point. Check that this condition is maintained during the test run (about 30-minute intervals). Monitor the temperature and velocity during the pretest ignition period to ensure that the proper flow rate is maintained. Make adjustments to the dilution tunnel flow rate as necessary.

8.6 Pretest Preparation. Same as Method 5, Section 8.1.

8.7 Preparation of Sampling Train. During preparation and assembly of the sampling train, keep all openings where contamination can occur covered until just prior to assembly or until sampling is about to begin.

Using a tweezer or clean disposable surgical gloves, place one labeled (identified) and weighed filter in each of the filter holders. Be sure that each filter is properly centered and that the gasket is properly placed so as to prevent the sample gas stream from circumventing the filter. Check each filter for tears after assembly is completed.

Mark the probe with heat resistant tape or by some other method to denote the proper distance into the stack or duct. Set up the train as shown in Figure 5G–1.

8.8 Leak-Check Procedures.

8.8.1 Leak-Check of Metering System Shown in Figure 5G–1. That portion of the sampling train from the pump to the orifice meter shall be leak-checked prior to initial use and after each certification or audit test. Leakage after the pump will result in less volume being recorded than is actually sampled. Use the procedure described in Method 5, Section 8.4.1. Similar leak-checks shall be conducted for other types of metering systems (*i.e.,* without orifice meters).

8.8.2 Pretest Leak-Check. A pretest leak-check of the sampling train is recommended, but not required. If the pretest leak check is conducted, the procedures outlined in Method 5, Section 8.4.2 should be used. A vacuum of 130 mm Hg (5 in. Hg) may be used instead of 380 mm Hg (15 in. Hg).

8.8.3 Post-Test Leak-Check. A leak-check of the sampling train is mandatory at the conclusion of each test run. The leak-check shall be performed in accordance with the procedures outlined in Method 5, Section 8.4.2. A vacuum of 130 mm Hg (5 in. Hg) or the highest vacuum measured during the test run, whichever is greater, may be used instead of 380 mm Hg (15 in. Hg).

8.9 Preliminary Determinations. Determine the pressure, temperature and the average velocity of the tunnel gases as in Section 8.5. Moisture content of diluted tunnel gases is assumed to be 4 percent for making flow rate calculations; the moisture content may be measured directly as in Method 4.

8.10 Sampling Train Operation. Position the probe inlet at the stack centroid, and block off the openings around the probe and porthole to prevent unrepresentative dilution of the gas stream. Be careful not to bump the probe into the stack wall when removing or inserting the probe through the porthole; this minimizes the chance of extracting deposited material.

8.10.1 Begin sampling at the start of the test run as defined in Method 28, Section 8.8.1. During the test run, maintain a sample flow rate proportional to the dilution tunnel flow rate (within 10 percent of the initial proportionality ratio) and a filter holder temperature of no greater than 32 °C (90 °F). The initial sample flow rate shall be approximately 0.015 m^3/min (0.5 cfm).

8.10.2 For each test run, record the data required on a data sheet such as the one shown in Figure 5G–3. Be sure to record the initial dry gas meter reading. Record the dry gas meter readings at the beginning and end of each sampling time increment and when sampling is halted. Take other readings as indicated on Figure 5G–3 at least once each 10 minutes during the test run. Since the manometer level and zero may drift because of vibrations and temperature changes, make periodic checks during the test run.

8.10.3 For the purposes of proportional sampling rate

determinations, data from calibrated flow rate devices, such as glass rotameters, may be used in lieu of incremental dry gas meter readings. Proportional rate calculation procedures must be revised, but acceptability limits remain the same.

8.10.4 During the test run, make periodic adjustments to keep the temperature between (or upstream of) the filters at the proper level. Do not change sampling trains during the test run.

8.10.5 At the end of the test run (see Method 28, Section 6.4.6), turn off the coarse adjust valve, remove the probe from the stack, turn off the pump, record the final dry gas meter reading, and conduct a post-test leak-check, as outlined in Section 8.8.2. Also, leak-check the pitot lines as described in Method 2, Section 8.1; the lines must pass this leak-check in order to validate the velocity head data.

8.11 Calculation of Proportional Sampling Rate. Calculate percent proportionality (see Section 12.7) to determine whether the run was valid or another test run should be made.

8.12 Sample Recovery. Same as Method 5, Section 8.7, with the exception of the following:

8.12.1 An acetone blank volume of about 50-ml or more may be used.

8.12.2 Treat the samples as follows:

8.12.2.1 Container Nos. 1 and 1A. Treat the two filters according to the procedures outlined in Method 5, Section 8.7.6.1. The filters may be stored either in a single container or in separate containers. Use the sum of the filter tare weights to determine the sample mass collected.

8.12.2.3 Container No. 2.

8.12.2.3.1 Taking care to see that dust on the outside of the probe or other exterior surfaces does not get into the sample, quantitatively recover particulate matter or any condensate from the probe and filter holders by washing and brushing these components with acetone and placing the wash in a labeled glass container. At least three cycles of brushing and rinsing are required.

8.12.2.3.2 Between sampling runs, keep brushes clean and protected from contamination.

8.12.2.3.3 After all acetone washings and particulate matter have been collected in the sample containers, tighten the lids on the sample containers so that the acetone will not leak out when transferred to the laboratory weighing area. Mark the height of the fluid levels to determine whether leakage occurs during transport. Label the containers clearly to identify contents.

8.13 Sample Transport. Whenever possible, containers should be shipped in such a way that they remain upright at all times.

Note: Requirements for capping and transport of sample containers are not applicable if sample recovery and analysis occur in the same room.

9.0 Quality Control

9.1 Miscellaneous Quality Control Measures.

Section	Quality control measure	Effect
8.8, 10.1–10.4	Sampling equipment leak check and calibration.	Ensures accurate measurement of stack gas flow rate, sample volume.
10.5	Analytical balance calibration	Ensure accurate and precise measurement of collected particulate.
16.2.5	Simultaneous, dual-train sample collection	Ensure precision of measured particulate concentration.

9.2 Volume Metering System Checks. Same as Method 5, Section 9.2.

10.0 Calibration and Standardization

Note: Maintain a laboratory record of all calibrations.

10.1 Pitot Tube. The Type S pitot tube assembly shall be calibrated according to the procedure outlined in Method 2, Section 10.1, prior to the first certification test and checked semiannually, thereafter. A standard pitot need not be calibrated but shall be inspected and cleaned, if necessary, prior to each certification test.

10.2 Volume Metering System.

10.2.1 Initial and Periodic Calibration. Before its initial use and at least semiannually thereafter, calibrate the volume metering system as described in Method 5, Section 10.3.1, except that the wet test meter with a capacity of 3.0 liters/rev (0.1 ft^3/rev) may be used. Other liquid displacement systems accurate to within ±1 percent, may be used as calibration standards.

Note: Procedures and equipment specified in Method 5, Section 16.0, for alternative calibration standards, including calibrated dry gas meters and critical orifices, are allowed for calibrating the dry gas meter in the sampling train. A dry gas meter used as a calibration standard shall be recalibrated at least once annually.

10.2.2 Calibration After Use. After each certification or audit test (four or more test runs conducted on a wood heater at the four burn rates specified in Method 28), check calibration of the metering system by performing three calibration runs at a single, intermediate flow rate as described in Method 5, Section 10.3.2.

Note: Procedures and equipment specified in Method 5, Section 16.0, for alternative calibration standards are allowed for the post-test dry gas meter calibration check.

10.2.3 Acceptable Variation in Calibration. If the dry gas meter coefficient values obtained before and after a certification test differ by more than 5 percent, the certification test shall either be voided and repeated, or calculations for the certification test shall be performed using whichever meter coefficient value (*i.e.,* before or after) gives the lower value of total sample volume.

10.3 Temperature Sensors. Use the procedure in Method 2, Section 10.3, to calibrate temperature sensors before the first certification or audit test and at least semiannually, thereafter.

10.4 Barometer. Calibrate against a mercury barometer before the first certification test and at least semiannually, thereafter. If a mercury barometer is used, no calibration is necessary. Follow the manufacturer's instructions for operation.

10.5 Analytical Balance. Perform a multipoint calibration (at least five points spanning the operational range) of the analytical balance before the first certification test and semiannually, thereafter. Before each certification test, audit the balance by weighing at least one calibration weight (class F) that corresponds to 50 to 150 percent of the weight of one filter. If the scale cannot reproduce the value of the calibration weight to within 0.1 mg, conduct the multipoint calibration before use.

11.0 Analytical Procedure

11.1 Record the data required on a sheet such as the one shown in Figure 5G–4. Use the same analytical balance for determining tare weights and final sample weights.

11.2 Handle each sample container as follows:

11.2.1 Container Nos. 1 and 1A. Treat the two filters according to the procedures outlined in Method 5, Section 11.2.1.

11.2.2 Container No. 2. Same as Method 5, Section 11.2.2, except that the beaker may be smaller than 250 ml.

11.2.3 Acetone Blank Container. Same as Method 5, Section 11.2.4, except that the beaker may be smaller than 250 ml.

12.0 Data Analysis and Calculations

Carry out calculations, retaining at least one extra significant figure beyond that of the acquired data. Round off figures after the final calculation. Other forms of the equations may be used as long as they give equivalent results.

12.1 Nomenclature.

B_{ws} = Water vapor in the gas stream, proportion by volume (assumed to be 0.04).

c_s = Concentration of particulate matter in stack gas, dry basis, corrected to standard conditions, g/dscm (gr/dscf).

E = Particulate emission rate, g/hr (lb/hr).

E_{adj} = Adjusted particulate emission rate, g/hr (lb/hr).

L_a = Maximum acceptable leakage rate for either a pretest or post-test leak-check, equal to 0.00057 m^3/min (0.020 cfm) or 4 percent of the average sampling rate, whichever is less.

L_p = Leakage rate observed during the post-test leak-check, m^3/min (cfm).

m_a = Mass of residue of acetone blank after evaporation, mg.

m_{aw} = Mass of residue from acetone wash after evaporation, mg.

m_n = Total amount of particulate matter collected, mg.

M_w = Molecular weight of water, 18.0 g/g-mole (18.0 lb/lb-mole).

P_{bar} = Barometric pressure at the sampling site, mm Hg (in. Hg).

PR = Percent of proportional sampling rate.

P_s = Absolute gas pressure in dilution tunnel, mm Hg (in. Hg).

P_{std} = Standard absolute pressure, 760 mm Hg (29.92 in. Hg).

Q_{sd} = Average gas flow rate in dilution tunnel, calculated as in Method 2, Equation 2–8, dscm/hr (dscf/hr).

T_m = Absolute average dry gas meter temperature (see Figure 5G–3), °K (°R).

T_{mi} = Absolute average dry gas meter temperature during each 10-minute interval, i, of the test run, °K (°R).

T_s = Absolute average gas temperature in the dilution tunnel (see Figure 5G–3), °K (°R).

T_{si} = Absolute average gas temperature in the dilution tunnel during each 10 minute interval, i, of the test run, °K (°R).

T_{std} = Standard absolute temperature, 293 °K (528 °R).

V_a = Volume of acetone blank, ml.

V_{aw} = Volume of acetone used in wash, ml.

V_m = Volume of gas sample as measured by dry gas meter, dcm (dcf).

V_{mi} = Volume of gas sample as measured by dry gas meter during each 10-minute interval, i, of the test run, dcm.

$V_{m(std)}$ = Volume of gas sample measured by the dry gas meter, corrected to standard conditions, dscm (dscf).

V_s = Average gas velocity in the dilution tunnel, calculated by Method 2, Equation 2–7, m/sec (ft/sec). The dilution tunnel dry gas molecular weight may be assumed to be 29 g/g mole (lb/lb mole).

V_{si} = Average gas velocity in dilution tunnel during each 10-minute interval, i, of the test run, calculated by Method 2, Equation 2–7, m/sec (ft/sec).

Y = Dry gas meter calibration factor.

ΔH = Average pressure differential across the orifice meter, if used (see Figure 5G–2), mm H^2O (in. H^2O).

U = Total sampling time, min.

10 = 10 minutes, length of first sampling period.

13.6 = Specific gravity of mercury.

100 = Conversion to percent.

12.2 Dry Gas Volume. Same as Method 5, Section 12.2, except that component changes are not allowable.

12.3 Solvent Wash Blank.

$$m_{aw} = \frac{m_a V_{aw}}{V_a} \qquad \text{Eq. 5G-1}$$

12.4 Total Particulate Weight. Determine the total particulate catch, mn, from the sum of the weights obtained from Container Nos. 1, 1A, and 2, less the acetone blank (see Figure 5G–4).

12.5 Particulate Concentration.

$$c_s = K_2 \frac{m_n}{V_{m(std)}} \qquad \text{Eq. 5G-2}$$

Where:

K_2 = 0.001 g/mg for metric units.
= 0.0154 gr/mg for English units.

12.6 Particulate Emission Rate.

$$E = C_s Q_{sd} \qquad \text{Eq. 5G-3}$$

Note: Particulate emission rate results produced using the sampling train described in Section 6 and shown in Figure 5G–1 shall be adjusted for reporting purposes by the following method adjustment factor:

$$E_{adj} = K_3 E^{0.83} \qquad \text{Eq. 5G-4}$$

Where:

K_3 = constant, 1.82 for metric units.
= constant, 0.643 for English units.

12.7 Proportional Rate Variation. Calculate PR for each 10-minute interval, i, of the test run.

$$PR = \left(\frac{\theta \left(V_{mi} V_s T_m T_{si} \right)}{10 \left(V_m V_{si} T_s T_{mi} \right)} \right) \times 100 \qquad \text{Eq. 5G-5}$$

Alternate calculation procedures for proportional rate variation may be used if other sample flow rate data (e.g., orifice flow meters or rotameters) are monitored to maintain proportional sampling rates. The proportional rate variations shall be calculated for each 10-minute interval by comparing the stack to nozzle velocity ratio for each 10-minute interval to the average stack to nozzle velocity ratio for the test run. Proportional rate variation may be calculated for intervals shorter than 10 minutes with appropriate revisions to Equation 5G–5. If no more than 10 percent of the PR values for all the intervals exceed 90 percent ≤ PR ≤ 110 percent, and if no PR value for any interval exceeds 80 percent ≤ PR ≤ 120 percent, the results are acceptable. If the PR values for the test run are judged to be unacceptable, report the test run emission results, but do not include the results in calculating the weighted average emission rate, and repeat the test run.

13.0 Method Performance. [Reserved]

14.0 Pollution Prevention. [Reserved]

15.0 Waste Management. [Reserved]

16.0 Alternative Procedures

16.1 Method 5H Sampling Train. The sampling train and sample collection, recovery, and analysis procedures described in Method 5H, Sections 6.1.1, 7.1, 7.2, 8.1, 8.10, 8.11, and 11.0, respectively, may be used in lieu of similar sections in Method 5G.

Operation of the Method 5H sampling train in the dilution tunnel is as described in Section 8.10 of this method. Filter temperatures and condenser conditions are as described in Method 5H. No adjustment to the measured particulate matter emission rate (Equation 5G–4, Section 12.6) is to be applied to the particulate emission rate measured by this alternative method.

16.2 Dual Sampling Trains. Two sampling trains may be operated simultaneously at sample flow rates other than that specified in Section 8.10, provided that the following specifications are met.

16.2.1 Sampling Train. The sampling train configuration shall be the same as specified in Section 6.1.1, except the probe, filter, and filter holder need not be the same sizes as specified in the applicable sections. Filter holders of plastic materials such as Nalgene or polycarbonate materials may be used (the Gelman 1119 filter holder has been found suitable for this purpose). With such materials, it is recommended that solvents not be used in sample recovery. The filter face velocity shall not exceed 150 mm/sec (30 ft/min) during the test run. The dry gas meter shall be calibrated for the same flow rate range as encountered during the test runs. Two separate, complete sampling trains are required for each test run.

16.2.2 Probe Location. Locate the two probes in the dilution tunnel at the same level (see Section 6.1.4.3). Two sample ports are necessary. Locate the probe inlets within the 50 mm (2 in.) diameter centroidal area of the dilution tunnel no closer than 25 mm (1 in.) apart.

16.2.3 Sampling Train Operation. Operate the sampling trains as specified in Section 8.10, maintaining proportional sampling rates and starting and stopping the two sampling trains simultaneously. The pitot values as described in Section 8.5.2 shall be used to adjust sampling rates in both sampling trains.

16.2.4 Recovery and Analysis of Sample. Recover and analyze the samples from the two sampling trains separately, as specified in Sections 8.12 and 11.0, respectively.

16.2.4.1 For this alternative procedure, the probe and filter holder assembly may be weighed without sample recovery (use no solvents) described above in order to determine the sample weight gains. For this approach, weigh the clean, dry probe and filter holder assembly upstream of the front filter (without filters) to the nearest 0.1 mg to establish the tare weights. The filter holder section between the front and second filter need not be weighed. At the end of the test run, carefully clean the outside of the probe, cap the ends, and identify the sample (label). Remove the filters from the filter holder assemblies as described for container Nos. 1 and 1A in Section 8.12.2.1. Reassemble the filter holder assembly, cap the ends, identify the sample (label), and transfer all the samples to the laboratory weighing area for final weighing. Requirements for capping and transport of sample containers are not applicable if sample recovery and analysis occur in the same room.

16.2.4.2 For this alternative procedure, filters may be weighed directly without a petri dish. If the probe and filter holder assembly are to be weighed to determine the sample weight, rinse the probe with acetone to remove moisture before desiccating prior to the test run. Following the test run, transport the probe and filter holder to the desiccator, and uncap the openings of the probe and the filter holder assembly. Desiccate for 24 hours and weigh to a constant weight. Report the results to the nearest 0.1 mg.

16.2.5 Calculations. Calculate an emission rate (Section 12.6) for the sample from each sampling train separately and determine the average emission rate for the two values. The two emission rates shall not differ by more than 7.5 percent from the average emission rate, or 7.5 percent of the weighted average emission rate limit in the applicable subpart of the regulations, whichever is greater. If this specification is not met, the results are unacceptable. Report the results, but do not include the results in calculating the weighted average emission rate. Repeat the test run until acceptable results are achieved, report the average emission rate for the acceptable test run, and use the average in calculating the weighted average emission rate.

17.0 References

Same as Method 5, Section 17.0, References 1 through 11, with the addition of the following:

1. Oregon Department of Environmental Quality. Standard Method for Measuring the Emissions and Efficiencies of Woodstoves. June 8, 1984. Pursuant to Oregon Administrative Rules Chapter 340, Division 21.

2. American Society for Testing and Materials. Proposed Test Methods for Heating Performance and Emissions of Residential Wood-fired Closed Combustion-Chamber Heating Appliances. E–6 Proposal P 180. August 1986.

BILLING CODE 6560–50–P

18.0 Tables, Diagrams, Flowcharts, and Validation Data

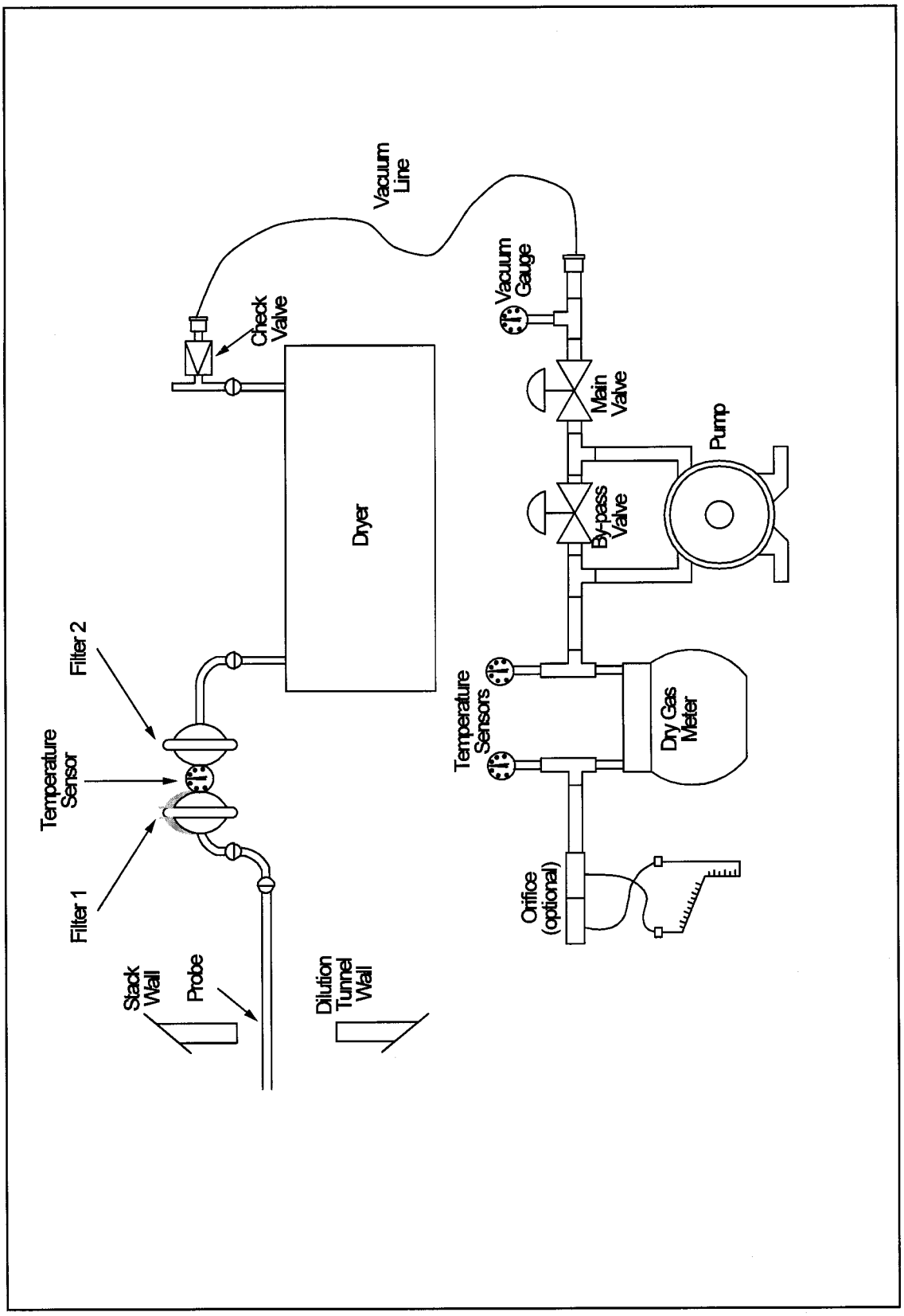

Figure 5G-1. Method 5G Sampling Train.

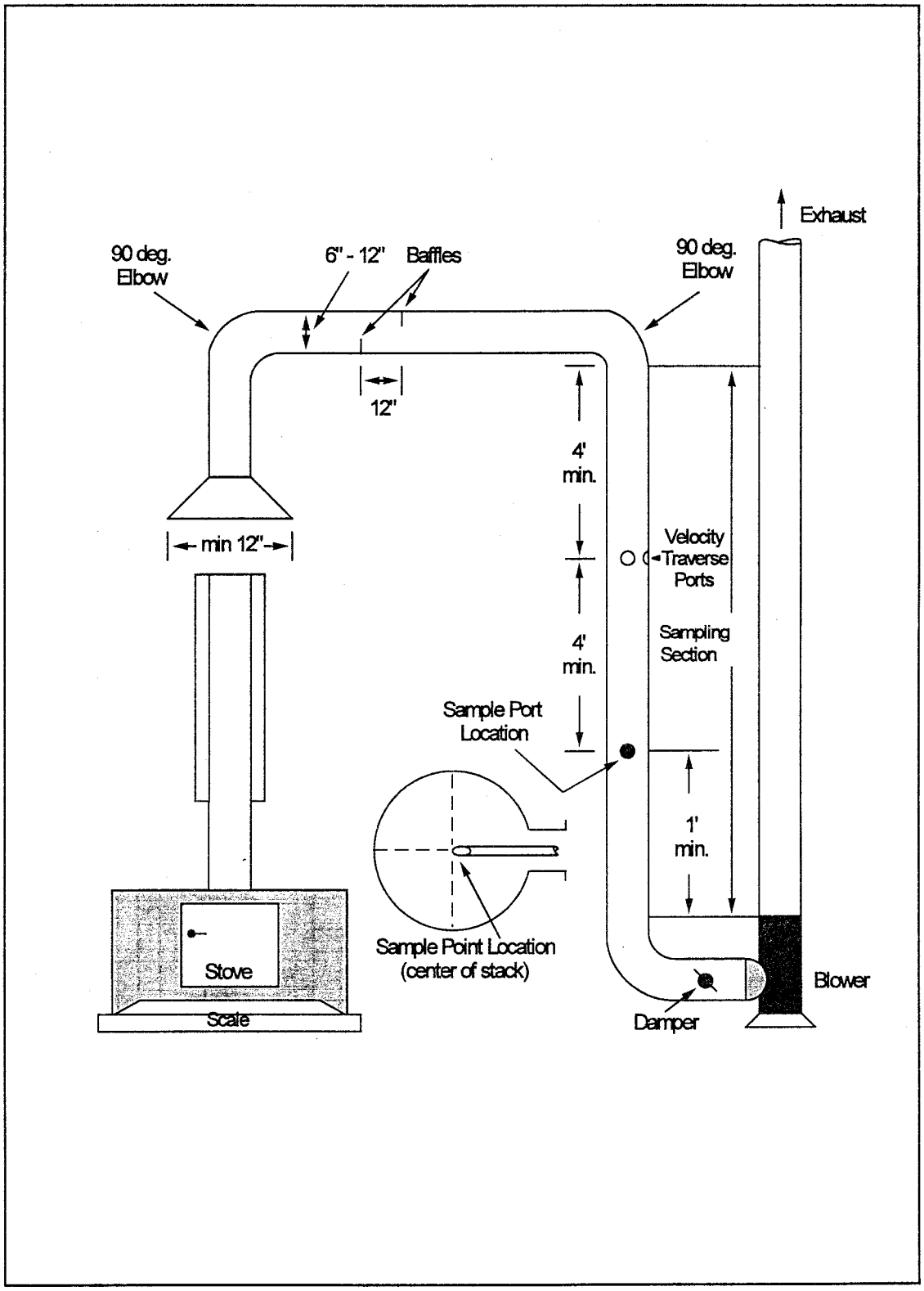

Figure 5G-2. Suggested Construction Details of the Dilution Tunnel.

Stove _____
Test Method _____
Operator _____
Date _____
Run No. _____
Start Time _____
Stop Time _____
Sample Box No. _____
Meter Box No. _____
Meter ΔH @ (optional) _____

Pitot tube coefficient, C_p _____
Room temperature, °C (°F) _____
Barometric pressure mb (in. Hg) _____
Measured or assumed moisture, % _____
Final leak rate, m^3/min, (cfm) _____
Probe liner material _____
Draft or static pressure, mm H_2O (in. H_2O) _____
Filter No. _____

Clock time	Test run time (e) min.	Vacuum mm Hg (in. Hg)	Tunnel temp (T_s) °C (°F)	Velocity head (ΔP_s) mm (in. H_2O)	Sample flow rate indicator (orifice meter optional) mm H_2O (in. H_2O)	Gas meter volume m^3 (ft^3)	Gas sample temp at dry gas meter		Filter holder temp °C (°F)	Temperature of gas leaving dryer or last impinger °C (°F)
							Inlet °C (°F)	Outlet °C (°F)		
Total							Avg.	Avg.		
Average							Avg.			

Figure 5G-3. Sampling Data Sheet.

Stove _____
Date _____
Run No. _____
Filter Nos. _____
Liquid lost during transport, ml _____
Acetone blank volume, ml _____
Acetone wash volume, ml _____
Acetone blank concentration, mg/mg _____
Acetone wash blank, mg _____

Container number	Weight of particulate collected, mg	
	Final weight	Tare weight
1_____		
2_____		
3_____		
Total		
Less acetone blank		
Weight of particulate matter		

Stack Moisture Measurement Data
(Optional)

	Volume of liquid water collected	
	Implinger volume, ml	Silica gel weight, g
Final_____		
Initial_____		
Liquid collected_____		
Total volume collected_____		g[1] or ml

[1]Convert weight of water to volume by dividing total weight increase by density of water (1 g/ml).

$$\frac{\text{Increase, g}}{(1\ \text{g/ml})} = \text{Volume water, ml}$$

Figure 5G-4. Analysis Data Sheet.

BILLING CODE 6560–50–C

Method 5H—Determination of Particulate Matter Emissions From Wood Heaters From a Stack Location

Note: This method does not include all of the specifications (*e.g.,* equipment and supplies) and procedures (*e.g.,* sampling and analytical) essential to its performance. Some material is incorporated by reference from other methods in this part. Therefore, to obtain reliable results, persons using this method should have a thorough knowledge of at least the following additional test methods: Method 2, Method 3, Method 5, Method 5G, Method 6, Method 6C, Method 16A, and Method 28.

1.0 Scope and Application

1.1 Analyte. Particulate matter (PM). No CAS number assigned.

1.2 Applicability. This method is applicable for the determination of PM and condensible emissions from wood heaters.

1.3 Data Quality Objectives. Adherence to the requirements of this method will enhance the quality of the data obtained from air pollutant sampling methods.

2.0 Summary of Method

2.1 Particulate matter is withdrawn proportionally from the wood heater exhaust and is collected on two glass fiber filters separated by impingers immersed in an ice water bath. The first filter is maintained at a temperature of no greater than 120 °C (248 °F). The second filter and the impinger system are cooled such that the temperature of the gas exiting the second filter is no greater than 20 °C (68 °F). The particulate mass collected in the probe, on the filters, and in the impingers is determined gravimetrically after the removal of uncombined water.

3.0 Definitions

Same as in Method 6C, Section 3.0.

4.0 Interferences. [Reserved]

5.0 Safety

5.1 Disclaimer. This method may involve hazardous materials, operations, and equipment. This test method may not address all of the safety problems associated with its use. It is the responsibility of the user of this test method to establish appropriate safety and health practices and to determine the applicability of regulatory limitations prior to performing this test method.

6.0 Equipment and Supplies

6.1 Sample Collection. The following items are required for sample collection:

6.1.1 Sampling Train. The sampling train configuration is shown in Figure 5H–1. Same as Method 5, Section 6.1.1, with the exception of the following:

6.1.1.1 Probe Nozzle. The nozzle is optional; a straight sampling probe without a nozzle is an acceptable alternative.

6.1.1.2 Probe Liner. Same as Method 5, Section 6.1.1.2, except that the maximum length of the sample probe shall be 0.6 m (2 ft) and probe heating is optional.

6.1.1.3 Filter Holders. Two each of borosilicate glass, with a glass frit or stainless steel filter support and a silicone rubber, Teflon, or Viton gasket. The holder design shall provide a positive seal against leakage from the outside or around the filter. The front filter holder shall be attached immediately at the outlet of the probe and prior to the first impinger. The second filter holder shall be attached on the outlet of the third impinger and prior to the inlet of the fourth (silica gel) impinger.

6.1.2 Barometer. Same as Method 5, Section 6.2.

6.1.3 Stack Gas Flow Rate Measurement System. A schematic of an example test system is shown in Figure 5H–2. The flow rate measurement system consists of the following components:

6.1.3.1 Sample Probe. A glass or stainless steel sampling probe.

6.1.3.2 Gas Conditioning System. A high density filter to remove particulate matter and a condenser capable of lowering the dew point of the gas to less than 5 °C (40 °F). Desiccant, such as Drierite, may be used to dry the sample gas. Do not use silica gel.

6.1.3.3 Pump. An inert (*e.g.,* Teflon or stainless steel heads) sampling pump capable of delivering more than the total amount of sample required in the manufacturer's instructions for the individual instruments. A means of controlling the analyzer flow rate and a device for determining proper sample flow rate (*e.g.,* precision rotameter, pressure gauge downstream of all flow controls) shall be provided at the analyzer. The requirements for measuring and controlling the analyzer flow rate are not applicable if data are presented that demonstrate that the analyzer is insensitive to flow variations over the range encountered during the test.

6.1.3.4 Carbon Monoxide (CO) Analyzer. Any analyzer capable of providing a measure of CO in the range of 0 to 10 percent by volume at least once every 10 minutes.

6.1.3.5 Carbon Dioxide (CO_2) Analyzer. Any analyzer capable of providing a measure of CO_2 in the range of 0 to 25 percent by volume at least once every 10 minutes.

Note: Analyzers with ranges less than those specified above may be used provided actual concentrations do not exceed the range of the analyzer.

6.1.3.6 Manifold. A sampling tube capable of delivering the sample gas to two analyzers and handling an excess of the total amount used by the analyzers. The excess gas is exhausted through a separate port.

6.1.3.7 Recorders (optional). To provide a permanent record of the analyzer outputs.

6.1.4 Proportional Gas Flow Rate System. To monitor stack flow rate changes and provide a measurement that can be used to adjust and maintain particulate sampling flow rates proportional to the stack gas flow rate. A schematic of the proportional flow rate system is shown in Figure 5H–2 and consists of the following components:

6.1.4.1 Tracer Gas Injection System. To inject a known concentration of sulfur dioxide (SO_2) into the flue. The tracer gas injection system consists of a cylinder of SO_2, a gas cylinder regulator, a stainless steel needle valve or flow controller, a nonreactive (stainless steel and glass) rotameter, and an injection loop to disperse the SO_2 evenly in the flue.

6.1.4.2 Sample Probe. A glass or stainless steel sampling probe.

6.1.4.3 Gas Conditioning System. A combustor as described in Method 16A, Sections 6.1.5 and 6.1.6, followed by a high density filter to remove particulate matter, and a condenser capable of lowering the dew point of the gas to less than 5 °C (40 °F). Desiccant, such as Drierite, may be used to dry the sample gas. Do not use silica gel.

6.1.4.4 Pump. Same as described in Section 6.1.3.3.

6.1.4.5 SO_2 Analyzer. Any analyzer capable of providing a measure of the SO_2 concentration in the range of 0 to 1,000 ppm by volume (or other range necessary to measure the SO_2 concentration) at least once every 10 minutes.

6.1.4.6 Recorder (optional). To provide a permanent record of the analyzer outputs.

Note: Other tracer gas systems, including helium gas systems, are acceptable for determination of instantaneous proportional sampling rates.

6.2 Sample Recovery. Same as Method 5, Section 6.2.

6.3 Sample Analysis. Same as Method 5, Section 6.3, with the addition of the following:

6.3.1 Separatory Funnel. Glass or Teflon, 500-ml or greater.

7.0 Reagents and Standards

7.1 Sample Collection. Same as Method 5, Section 7.1, including deionized distilled water.

7.2 Sample Recovery. Same as Method 5, Section 7.2.

7.3 Sample Analysis. The following reagents and standards are required for sample analysis:

7.3.1 Acetone. Same as Method 5 Section 7.2.

7.3.2 Dichloromethane (Methylene Chloride). Reagent grade, <0.001 percent residue in glass bottles.

7.3.3 Desiccant. Anhydrous calcium sulfate, calcium chloride, or silica gel, indicating type.

7.3.4 Cylinder Gases. For the purposes of this procedure, span value is defined as the upper limit of the range specified for each analyzer as described in Section 6.1.3.4 or 6.1.3.5. If an analyzer with a range different from that specified in this method is used, the span value shall be equal to the upper limit of the range for the analyzer used (see **Note** in Section 6.1.3.5).

7.3.4.1 Calibration Gases. The calibration gases for the CO_2, CO, and SO_2 analyzers shall be CO_2 in nitrogen (N_2), CO in N_2, and SO_2 in N_2, respectively. CO_2 and CO calibration gases may be combined in a single cylinder. Use three calibration gases as specified in Method 6C, Sections 7.2.1 through 7.2.3.

7.3.4.2 SO_2 Injection Gas. A known concentration of SO_2 in N_2. The concentration must be at least 2 percent SO_2 with a maximum of 100 percent SO_2.

8.0 Sample Collection, Preservation, Transport, and Storage

8.1 Pretest Preparation. Same as Method 5, Section 8.1.

8.2 Calibration Gas and SO_2 Injection Gas Concentration Verification, Sampling System Bias Check, Response Time Test, and Zero and Calibration Drift Tests. Same as Method 6C, Sections 8.2.1, 8.2.3, 8.2.4, and 8.5, respectively, except that for verification of CO and CO_2 gas concentrations, substitute Method 3 for Method 6.

8.3 Preliminary Determinations.

8.3.1 Sampling Location. The sampling location for the particulate sampling probe shall be 2.45 ± 0.15 m (8 ± 0.5 ft) above the platform upon which the wood heater is placed (*i.e.*, the top of the scale).

8.3.2 Sampling Probe and Nozzle. Select a nozzle, if used, sized for the range of velocity heads, such that it is not necessary to change the nozzle size in order to maintain proportional sampling rates. During the run, do not change the nozzle size. Select a suitable probe liner and probe length to effect minimum blockage.

8.4 Preparation of Particulate Sampling Train. Same as Method 5, Section 8.3, with the exception of the following:

8.4.1 The train should be assembled as shown in Figure 5H–1.

8.4.2 A glass cyclone may not be used between the probe and filter holder.

8.5 Leak-Check Procedures.

8.5.1 Leak-Check of Metering System Shown in Figure 5H–1. That portion of the sampling train from the pump to the orifice meter shall be leak-checked after each certification or audit test. Use the procedure described in Method 5, Section 8.4.1.

8.5.2 Pretest Leak-Check. A pretest leak-check of the sampling train is recommended, but not required. If the pretest leak-check is conducted, the procedures outlined in Method 5, Section 8.5.2 should be used. A vacuum of 130 mm Hg (5 in. Hg) may be used instead of 380 mm Hg (15 in. Hg).

8.5.2 Leak-Checks During Sample Run. If, during the sampling run, a component (*e.g.*, filter assembly or impinger) change becomes necessary, conduct a leak-check as described in Method 5, Section 8.4.3.

8.5.3 Post-Test Leak-Check. A leak-check is mandatory at the conclusion of each sampling run. The leak-check shall be performed in accordance with the procedures outlined in Method 5, Section 8.4.4, except that a vacuum of 130 mm Hg (5 in. Hg) or the greatest vacuum measured during the test run, whichever is greater, may be used instead of 380 mm Hg (15 in. Hg).

8.6 Tracer Gas Procedure. A schematic of the tracer gas injection and sampling systems is shown in Figure 5H–2.

8.6.1 SO_2 Injection Probe. Install the SO_2 injection probe and dispersion loop in the stack at a location 2.9 ± 0.15 m (9.5 ± 0.5 ft) above the sampling platform.

8.6.2 SO_2 Sampling Probe. Install the SO_2 sampling probe at the centroid of the stack at a location 4.1 ± 0.15 m (13.5 ± 0.5 ft) above the sampling platform.

8.7 Flow Rate Measurement System. A schematic of the flow rate measurement system is shown in Figure 5H–2. Locate the flow rate measurement sampling probe at the centroid of the stack at a location 2.3 ± 0.3 m (7.5 ± 1 ft) above the sampling platform.

8.8 Tracer Gas Procedure. Within 1 minute after closing the wood heater door at the start of the test run (as defined in Method 28, Section 8.8.1), meter a known concentration of SO_2 tracer gas at a constant flow rate into the wood heater stack. Monitor the SO_2 concentration in the stack, and record the SO_2 concentrations at 10-minute intervals or more often. Adjust the particulate sampling flow rate proportionally to the SO_2 concentration changes using Equation 5H–6 (*e.g.*, the SO_2 concentration at the first 10-minute reading is measured to be 100 ppm; the next 10 minute SO_2 concentration is measured to be 75 ppm: the particulate sample flow rate is adjusted from the initial 0.15 cfm to 0.20 cfm). A check for proportional rate variation shall be made at the completion of the test run using Equation 5H–10.

8.9 Volumetric Flow Rate Procedure. Apply stoichiometric relationships to the wood combustion process in determining the exhaust gas flow rate as follows:

8.9.1 Test Fuel Charge Weight. Record the test fuel charge weight (wet) as specified in Method 28, Section 8.8.2. The wood is assumed to have the following weight percent composition: 51 percent carbon, 7.3 percent hydrogen, 41 percent oxygen. Record the wood moisture for each fuel charge as described in Method 28, Section 8.6.5. The ash is assumed to have negligible effect on associated C, H, and O concentrations after the test burn.

8.9.2 Measured Values. Record the CO and CO_2 concentrations in the stack on a dry basis every 10 minutes during the test run or more often. Average these values for the test run. Use as a mole fraction (*e.g.*, 10 percent CO_2 is recorded as 0.10) in the calculations to express total flow (see Equation 5H–6).

8.10 Sampling Train Operation.

8.10.1 For each run, record the data required on a data sheet such as the one shown in Figure 5H–3. Be sure to record the initial dry gas meter reading. Record the dry gas meter readings at the beginning and end of each sampling time increment, when changes in flow rates are made, before and after each leak-check, and when sampling is halted. Take other readings as indicated on Figure 5H–3 at least once each 10 minutes during the test run.

8.10.2 Remove the nozzle cap, verify that the filter and probe heating systems are up to temperature, and that the probe is properly positioned. Position the nozzle, if used, facing into gas stream, or the probe tip in the 50 mm (2 in.) centroidal area of the stack.

8.10.3 Be careful not to bump the probe tip into the stack wall when removing or inserting the probe through the porthole; this minimizes the chance of extracting deposited material.

8.10.4 When the probe is in position, block off the openings around the probe and porthole to prevent unrepresentative dilution of the gas stream.

8.10.5 Begin sampling at the start of the test run as defined in Method 28, Section 8.8.1, start the sample pump, and adjust the sample flow rate to between 0.003 and 0.014 m^3/min (0.1 and 0.5 cfm). Adjust the sample flow rate proportionally to the stack gas flow during the test run according to the procedures outlined in Section 8. Maintain a proportional sampling rate (within 10 percent of the desired value) and a filter holder temperature no greater than 120 °C (248 °F).

8.10.6 During the test run, make periodic adjustments to keep the temperature around the filter holder at the proper level. Add more ice to the impinger box and, if necessary, salt to maintain a temperature of less than 20 °C (68 °F) at the condenser/silica gel outlet.

8.10.7 If the pressure drop across the filter becomes too high, making proportional sampling difficult to maintain, either filter may be replaced during a sample run. It is recommended that another complete filter assembly be used rather than attempting to change the filter itself. Before a new filter assembly is installed, conduct a leak-check (see Section 8.5.2). The total particulate weight shall include the summation of all filter assembly catches. The total time for changing sample train components shall not exceed 10 minutes. No more than one component change is allowed for any test run.

8.10.8 At the end of the test run, turn off the coarse adjust valve, remove the probe and nozzle from the stack, turn off the pump, record the final dry gas meter reading, and conduct a post-test leak-check, as outlined in Section 8.5.3.

8.11 Sample Recovery. Same as Method 5, Section 8.7, with the exception of the following:

8.11.1 Blanks. The volume of the acetone blank may be about 50-ml, rather than 200-ml; a 200-ml water blank shall also be saved for analysis.

8.11.2 Samples.

8.11.2.1 Container Nos. 1 and 1A. Treat the two filters according to the procedures outlined in Method 5, Section 8.7.6.1. The filters may be stored either in a single container or in separate containers.

8.11.2.2 Container No. 2. Same as Method 5, Section 8.7.6.2, except that the container should not be sealed until the impinger rinse solution is added (see Section 8.10.2.4).

8.11.2.3 Container No. 3. Treat the impingers as follows: Measure the liquid which is in the first three impingers to within 1-ml by using a graduated cylinder or by weighing it to within 0.5 g by using a balance (if one is available). Record the volume or weight of liquid present. This information is required to calculate the moisture content of the effluent gas. Transfer the water from the first, second, and third impingers to a glass container. Tighten the lid on the sample container so that water will not leak out.

8.11.2.4 Rinse impingers and graduated cylinder, if used, with acetone three times or more. Avoid direct contact between the acetone and any stopcock grease or collection of any stopcock grease in the rinse solutions. Add these rinse solutions to sample Container No. 2.

8.11.2.5 Container No. 4. Same as Method 5, Section 8.7.6.3

8.12 Sample Transport. Whenever possible, containers should be transferred in such a way that they remain upright at all times.

Note: Requirements for capping and transport of sample containers are not applicable if sample recovery and analysis occur in the same room.

9.0 Quality Control

9.1 Miscellaneous Quality Control Measures.

Section	Quality control measure	Effect
8.2	Sampling system bias check	Ensures that bias introduced by measurement system, minus analyzer, is no greater than 3 percent of span.
8.2	Analyzer zero and calibration drift tests	Ensures that bias introduced by drift in the measurement system output during the run is no greater than 3 percent of span.
8.5, 10.1, 12.13	Sampling equipment leak-check and calibration; proportional sampling rate verification.	Ensures accurate measurement of stack gas flow rate, sample volume.
10.1	Analytical balance calibration	Ensure accurate and precise measurement of collected particulate.
10.3	Analyzer calibration error check	Ensures that bias introduced by analyzer calibration error is no greater than 2 percent of span.

9.2 Volume Metering System Checks. Same as Method 5, Section 9.2.

10.0 Calibration and Standardization

Note: Maintain a laboratory record of all calibrations.

10.1 Volume Metering System, Temperature Sensors, Barometer, and Analytical Balance. Same as Method 5G, Sections 10.2 through 10.5, respectively.

10.2 SO_2 Injection Rotameter. Calibrate the SO_2 injection rotameter system with a soap film flowmeter or similar direct volume measuring device with an accuracy of 2 percent. Operate the rotameter at a single reading for at least three calibration runs for 10 minutes each. When three consecutive calibration flow rates agree within 5 percent, average the three flow rates, mark the rotameter at the calibrated setting, and use the calibration flow rate as the SO_2 injection flow rate during the test run. Repeat the rotameter calibration before the first certification test and semiannually thereafter.

10.3. Gas Analyzers. Same as Method 6C, Section 10.0.

11.0 Analytical Procedure

11.1 Record the data required on a sheet such as the one shown in Figure 5H–4.

11.2 Handle each sample container as follows:

11.2.1 Container Nos. 1 and 1A. Treat the two filters according to the procedures outlined in Method 5, Section 11.2.1.

11.2.2 Container No. 2. Same as Method 5, Section 11.2.2, except that the beaker may be smaller than 250-ml.

11.2.3 Container No. 3. Note the level of liquid in the container and confirm on the analysis sheet whether leakage occurred during transport. If a noticeable amount of leakage has occurred, either void the sample or use methods, subject to the approval of the Administrator, to correct the final results. Determination of sample leakage is not applicable if sample recovery and analysis occur in the same room. Measure the liquid in this container either volumetrically to within 1-ml or gravimetrically to within 0.5 g. Transfer the contents to a 500-ml or larger separatory funnel. Rinse the container with water, and add to the separatory

funnel. Add 25-ml of dichloromethane to the separatory funnel, stopper and vigorously shake 1 minute, let separate and transfer the dichloromethane (lower layer) into a tared beaker or evaporating dish. Repeat twice more. It is necessary to rinse Container No. 3 with dichloromethane. This rinse is added to the impinger extract container. Transfer the remaining water from the separatory funnel to a tared beaker or evaporating dish and evaporate to dryness at 104 °C (220 °F). Desiccate and weigh to a constant weight. Evaporate the combined impinger water extracts at ambient temperature and pressure. Desiccate and weigh to a constant weight. Report both results to the nearest 0.1 mg.

11.2.4 Container No. 4. Weigh the spent silica gel (or silica gel plus impinger) to the nearest 0.5 g using a balance.

11.2.5 Acetone Blank Container. Same as Method 5, Section 11.2.4, except that the beaker may be smaller than 250 ml.

11.2.6 Dichloromethane Blank Container. Treat the same as the acetone blank.

11.2.7 Water Blank Container. Transfer the water to a tared 250 ml beaker and evaporate to dryness at 104 °C (220 °F). Desiccate and weigh to a constant weight.

12.0 Data Analysis and Calculations

Carry out calculations, retaining at least one extra significant figure beyond that of the acquired data. Round off figures after the final calculation. Other forms of the equations may be used as long as they give equivalent results.

12.1 Nomenclature.

a = Sample flow rate adjustment factor.
BR = Dry wood burn rate, kg/hr (lb/hr), from Method 28, Section 8.3.
B_{ws} = Water vapor in the gas stream, proportion by volume.
C_s = Concentration of particulate matter in stack gas, dry basis, corrected to standard conditions, g/dscm (g/dscf).
E = Particulate emission rate, g/hr (lb/hr).
ΔH = Average pressure differential across the orifice meter (see Figure 5H–1), mm H_2O (in. H_2O).
L_a = Maximum acceptable leakage rate for either a post-test leak-check or for a leak-check following a component change; equal to 0.00057 cmm (0.020 cfm) or 4 percent of the average sampling rate, whichever is less.
L_1 = Individual leakage rate observed during the leak-check conducted before a component change, cmm (cfm).
L_p = Leakage rate observed during the post-test leak-check, cmm (cfm).
m_n = Total amount of particulate matter collected, mg.
M_a = Mass of residue of solvent after evaporation, mg.
N_C = Grams of carbon/gram of dry fuel (lb/lb), equal to 0.0425.
N_T = Total dry moles of exhaust gas/kg of dry wood burned, g-moles/kg (lb-moles/lb).
PR = Percent of proportional sampling rate.
P_{bar} = Barometric pressure at the sampling site, mm Hg (in.Hg).
P_{std} = Standard absolute pressure, 760 mm Hg (29.92 in.Hg).
Q_{sd} = Total gas flow rate, dscm/hr (dscf/hr).
S_1 = Concentration measured at the SO_2 analyzer for the first 10-minute interval, ppm.
S_i = Concentration measured at the SO_2 analyzer for the ''ith'' 10 minute interval, ppm.
T_m = Absolute average dry gas meter temperature (see Figure 5H–3), °K (°R).
T_{std} = Standard absolute temperature, 293 °K (528 °R).
V_a = volume of solvent blank, ml.
V_{aw} = Volume of solvent used in wash, ml.
V_{lc} = Total volume of liquid collected in impingers and silica gel (see Figure 5H–4), ml.
V_m = Volume of gas sample as measured by dry gas meter, dcm (dcf).
$V_{m(std)}$ = Volume of gas sample measured by the dry gas meter, corrected to standard conditions, dscm (dscf).
$V_{mi(std)}$ = Volume of gas sample measured by the dry gas meter during the ''ith'' 10-minute interval, dscm (dscf).
$V_{w(std)}$ = Volume of water vapor in the gas sample, corrected to standard conditions, scm (scf).
W_a = Weight of residue in solvent wash, mg.
Y = Dry gas meter calibration factor.
Y_{CO} = Measured mole fraction of CO (dry), average from Section 8.2, g/g-mole (lb/lb-mole).
Y_{CO2} = Measured mole fraction of CO_2 (dry), average from Section 8.2, g/g-mole (lb/lb-mole).
Y_{HC} = Assumed mole fraction of HC (dry), g/g-mole (lb/lb-mole); = 0.0088 for catalytic wood heaters; = 0.0132 for non-catalytic wood heaters; = 0.0080 for pellet-fired wood heaters.
10 = Length of first sampling period, min.
13.6 = Specific gravity of mercury.
100 = Conversion to percent.
θ = Total sampling time, min.
θ_1 = Sampling time interval, from the beginning of a run until the first component change, min.

12.2 Average Dry Gas Meter Temperature and Average Orifice Pressure Drop. See data sheet (Figure 5H–3).

12.3 Dry Gas Volume. Same as Method 5, Section 12.3.

12.4 Volume of Water Vapor.

$$V_{w(std)} = K_2 V_{1c} \qquad \text{Eq. 5H-1}$$

Where:

K_2 = 0.001333 m^3/ml for metric units.
K_2 = 0.04707 ft^3/ml for English units.

12.5 Moisture Content.

$$B_{ws} = \frac{V_{w(std)}}{V_{m(std)} + V_{w(std)}} \qquad \text{Eq. 5H-2}$$

12.6 Solvent Wash Blank.

$$W_a = \frac{M_a V_{aw}}{V_a} \qquad \text{Eq. 5H-3}$$

12.7 Total Particulate Weight. Determine the total particulate catch from the sum of the weights obtained from containers 1, 2, 3, and 4 less the appropriate solvent blanks (see Figure 5H–4).

Note: Refer to Method 5, Section 8.5 to assist in calculation of results involving two filter assemblies.

12.8 Particulate Concentration.

$$C_s = \frac{0.001g}{mg} \frac{m_n}{V_{m(std)}} \qquad \text{Eq. 5H-4}$$

12.9 Sample Flow Rate Adjustment.

$$a = \frac{S_1}{S_i} \qquad \text{Eq. 5H-5}$$

12.10 Carbon Balance for Total Moles of Exhaust Gas (dry)/kg of Wood Burned in the Exhaust Gas.

$$N_T = \frac{K_3 N_C}{Y_{CO_2} + Y_{CO} + Y_{HC}} \qquad \text{Eq. 5H-6}$$

Where:

K_3 = 1000 g/kg for metric units.
K_3 = 1.0 lb/lb for English units.

Note: The NO_X/SO_X portion of the gas is assumed to be negligible.

12.11 Total Stack Gas Flow Rate.

$$Q_{sd} = K_4 \, N_T \, BR \qquad \text{Eq. 5H-7}$$

Where:

K_4 = 0.02406 dscm/g-mole for metric units.
K_4 = 384.8 dscf/lb-mole for English units.

12.12 Particulate Emission Rate.

$$E = C_s \, Q_{sd} \qquad \text{Eq. 5H-8}$$

12.13 Proportional Rate Variation. Calculate PR for each 10-minute interval, i, of the test run.

$$PR = \frac{\theta\, S_i V_{mi(std)}}{10 \sum_{i=1}^{N} \left[S_i V_{mi(std)} \right]} \times 100 \qquad \text{Eq. 5H-9}$$

12.14 Acceptable Results. If no more than 15 percent of the PR values for all the intervals fall outside the range 90 percent ≤ PR ≤ 110 percent, and if no PR value for any interval falls outside the range 75 ≤ PR ≤ 125 percent, the results are acceptable. If the PR values for the test runs are judged to be unacceptable, report the test run emission results, but do not include the test run results in calculating the weighted average emission rate, and repeat the test.

13.0 Method Performance. [Reserved]

14.0 Pollution Prevention. [Reserved]

15.0 Waste Management. [Reserved]

16.0 References

Same as Method 5G, Section 17.0.

BILLING CODE 6560–50–P

17.0 Tables, Diagrams, Flowcharts, and Validation Data

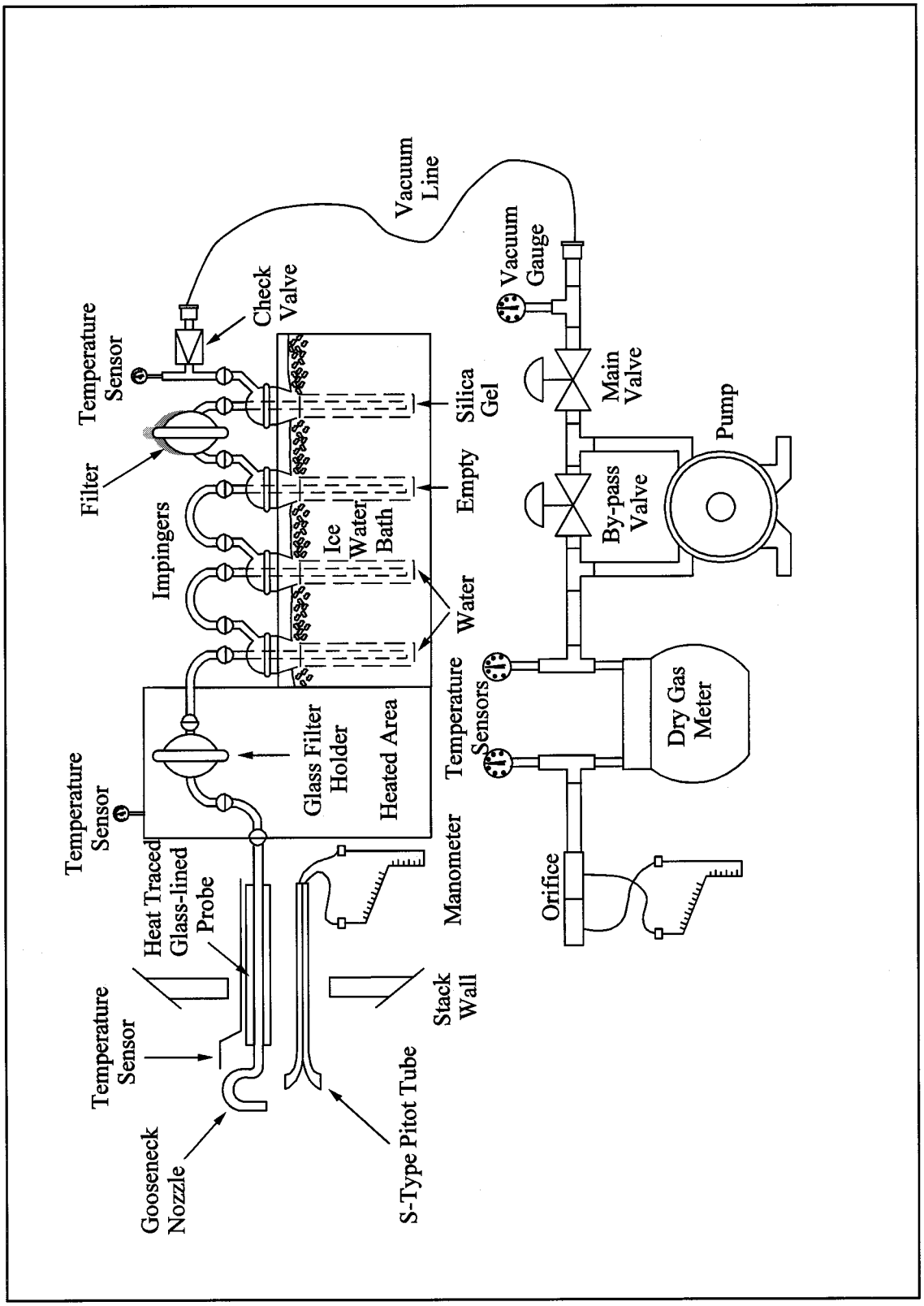

Figure 5H-1. Sampling Train.

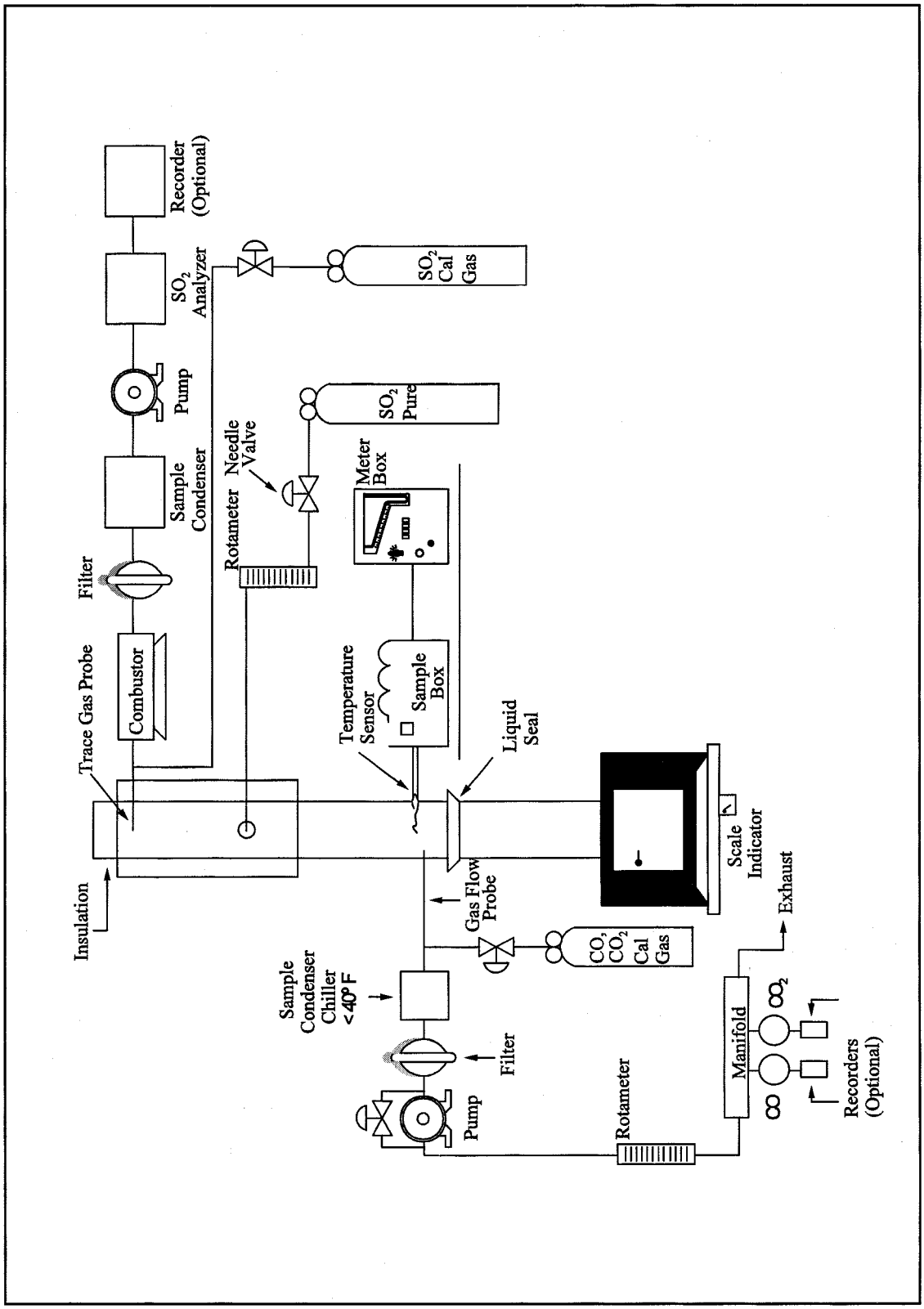

Figure 5H-2. Test System Schematic.

Stove _____
Test Method _____
Operator _____
Date _____
Run No. _____
Start Time _____
Stop Time _____
Sample Box No. _____
Meter Box No. _____
Meter $\Delta H_@$ (Optional) _____
C Factor _____

Pitot tube coefficient, Cp _____
Room temperature, C°, (°F) _____
Barometric pressure mb (in. Hg) _____
Measured or assumed moisture, % _____
Nozzle identification No. _____
Average calibrated nozzle diameter, mm (in.) _____
Final leak rate, m³/min, (cfm) _____
Probe liner material _____
Draft or static pressure, mm H_2O (in. H_2O) _____
Filter Nos. _____

Clock time	Test run time	Vacuum	Fuel temperature	Flow in Flue	Volume sample in period	Gas meter volume	Gas sample temperature at dry gas meter		Front filter holder temperature	Temperature of gas leaving dryer or last impinger
	(q). min.	mm Hg (in. Hg)	(T_s) °C (°F)	m³/ min (ft³/min)	m³(ft³)	m³ (ft³)	°C (°F)	°C (°F)	°C (°F)	°C (°F)
Total							Avg.	Avg.		
Average							Avg.			

Figure 5H-3. Sampling Data Sheet.

Stove _____
Date _____
Run No. _____
Filter Nos. _____
Amount liquid lost during transport, ml _____
Acetone blank volume, ml _____
Acetone wash volume, ml _____
Acetone blank concentration, mg/ml _____
Acetone wash blank, mg _____

Dichloromethane blank volume, ml _____
Dichloromethane wash volume, ml _____
Dichloromethane blank concentration, mg/ml _____
Dichloromethane wash blank, mg _____
Water blank volume, ml _____
Waster wash volume, ml _____
Water blank concentration, mg/ml _____
Water wash blank, mg _____

Container number	Weight of particulate collected, mg		
	Final weight	Tare weight	Weight gain
1 _____			
2 _____			
3 _____			
4 _____			
5 _____			
Total			
Less acetone blank			
Less dichloromethane blank			
Less water blank			
Weight of particulate matter			

	Volume of liquid water collected	
	Impinger volume, ml	Silica gel weight, g
Final _____		
Initial _____		
Liquid collected _____		
Total volume collected _____		g or ml

* Convert weight of water to volume by dividing total weight increase by density of water (1 g/ml).

$$\frac{\text{Increase, g}}{(1\ \text{g/ml})} = \text{Volume water, ml}$$

Figure 5H-4. Analysis data sheet.

Figure 5H-4. Analysis Data Sheet.

Method 6—Determination of Sulfur Dioxide Emissions From Stationary Sources

Note: This method does not include all of the specifications (*e.g.,* equipment and supplies) and procedures (*e.g.,* sampling and analytical) essential to its performance. Some material is incorporated by reference from other methods in this part. Therefore, to obtain reliable results, persons using this method should have a thorough knowledge of at least the following additional test methods: Method 1, Method 2, Method 3, Method 5, and Method 8.

1.0 Scope and Application

1.1 Analytes.

Analyte	CAS No.	Sensitivity
SO_2	7449–09–5	3.4 mg SO_2/m^3 $(2.12 \times 10)_{-7}$ lb/ft$_3$

1.2 Applicability. This method applies to the measurement of sulfur dioxide (SO^2) emissions from stationary sources.

1.3 Data Quality Objectives. Adherence to the requirements of this method will enhance the quality of the data obtained from air pollutant sampling methods.

2. 0 Summary of Method

2.1 A gas sample is extracted from the sampling point in the stack. The SO^2 and the sulfur trioxide, including those fractions in any sulfur acid mist, are separated. The SO^2 fraction is measured by the barium-thorin titration method.

3.0 Definitions. [Reserved]

4.0 Interferences

4.1 Free Ammonia. Free ammonia interferes with this method by reacting with SO^2 to form particulate sulfite and by reacting with the indicator. If free ammonia is present (this can be determined by knowledge of the process and/or noticing white particulate matter in the probe and isopropanol bubbler), alternative methods, subject to the approval of the Administrator are required. One approved alternative is listed in Reference 13 of Section 17.0.

4.2 Water-Soluble Cations and Fluorides. The cations and fluorides are removed by a glass wool filter and an isopropanol bubbler; therefore, they do not affect the SO_2 analysis. When samples are collected from a gas stream with high concentrations of metallic fumes (*i.e.,* very fine cation aerosols) a high-efficiency glass fiber filter must be used in place of the glass wool plug (*i.e.,* the one in the probe) to remove the cation interferent.

5.0 Safety

5.1 Disclaimer. This method may involve hazardous materials, operations, and equipment. This test method may not address all of the safety problems associated with its use. It is the responsibility of the user to establish appropriate safety and health practices and determine the applicability of regulatory limitations before performing this test method.

5.2 Corrosive reagents. The following reagents are hazardous. Personal protective equipment and safe procedures are useful in preventing chemical splashes. If contact occurs, immediately flush with copious amounts of water for at least 15 minutes. Remove clothing under shower and decontaminate. Treat residual chemical burns as thermal burns.

5.2.1 Hydrogen Peroxide (H_2O_2). Irritating to eyes, skin, nose, and lungs. 30% H_2O_2 is a strong oxidizing agent. Avoid contact with skin, eyes, and combustible material. Wear gloves when handling.

5.2.2 Sodium Hydroxide (NaOH). Causes severe damage to eyes and skin. Inhalation causes irritation to nose, throat, and lungs. Reacts exothermically with limited amounts of water.

5.2.3 Sulfuric Acid (H_2SO_4). Rapidly destructive to body tissue. Will cause third degree burns. Eye damage may result in blindness. Inhalation may be fatal from spasm of the larynx, usually within 30 minutes. May cause lung tissue damage with edema. 1 mg/m^3 for 8 hours will cause lung damage or, in higher concentrations, death. Provide ventilation to limit inhalation. Reacts violently with metals and organics.

6.0 Equipment and Supplies

6.1 Sample Collection. The following items are required for sample collection:

6.1.1 Sampling Train. A schematic of the sampling train is shown in Figure 6–1. The sampling equipment described in Method 8 may be substituted in place of the midget impinger equipment of Method 6. However, the Method 8 train must be modified to include a heated filter between the probe and isopropanol impinger, and the operation of the sampling train and sample analysis must be at the flow rates and solution volumes defined in Method 8. Alternatively, SO_2 may be determined simultaneously with particulate matter and moisture determinations by either (1) replacing the water in a Method 5 impinger system with a 3 percent H_2O_2 solution, or (2) replacing the Method 5 water impinger system with a Method 8 isopropanol-filter-H_2O_2 system. The analysis for SO_2 must be consistent with the procedure of Method 8. The Method 6 sampling train consists of the following components:

6.1.1.1 Probe. Borosilicate glass or stainless steel (other materials of construction may be used, subject to the approval of the Administrator), approximately 6 mm (0.25 in.) inside diameter, with a heating system to prevent water condensation and a filter (either in-stack or heated out-of-stack) to remove particulate matter, including sulfuric acid mist. A plug of glass wool is a satisfactory filter.

6.1.1.2 Bubbler and Impingers. One midget bubbler with medium-coarse glass frit and borosilicate or quartz glass wool packed in top (see Figure 6–1) to prevent sulfuric acid mist carryover, and three 30-ml midget impingers. The midget bubbler and midget impingers must be connected in series with leak-free glass connectors. Silicone grease may be used, if necessary, to prevent leakage. A midget impinger may be used in place of the midget bubbler.

Note: Other collection absorbers and flow rates may be used, subject to the approval of the Administrator, but the collection efficiency must be shown to be at least 99 percent for each test run and must be documented in the report. If the efficiency is found to be acceptable after a series of three tests, further documentation is not required. To conduct the efficiency test, an extra absorber must be added and analyzed separately. This extra absorber must not contain more than 1 percent of the total SO_2.

6.1.1.3 Glass Wool. Borosilicate or quartz.

6.1.1.4 Stopcock Grease. Acetone-insoluble, heat-stable silicone grease may be used, if necessary.

6.1.1.5 Temperature Sensor. Dial thermometer, or equivalent, to measure temperature of gas leaving impinger train to within 1 °C (2 °F).

6.1.1.6 Drying Tube. Tube packed with 6- to 16- mesh indicating-type silica gel, or equivalent, to dry the gas sample and to protect the meter and pump. If silica gel is previously used, dry at 177 °C (350 °F) for 2 hours. New silica gel may be used as received. Alternatively, other types of desiccants

(equivalent or better) may be used, subject to the approval of the Administrator.

6.1.1.7 Valve. Needle valve, to regulate sample gas flow rate.

6.1.1.8 Pump. Leak-free diaphragm pump, or equivalent, to pull gas through the train. Install a small surge tank between the pump and rate meter to negate the pulsation effect of the diaphragm pump on the rate meter.

6.1.1.9 Rate Meter. Rotameter, or equivalent, capable of measuring flow rate to within 2 percent of the selected flow rate of about 1 liter/min (0.035 cfm).

6.1.1.10 Volume Meter. Dry gas meter (DGM), sufficiently accurate to measure the sample volume to within 2 percent, calibrated at the selected flow rate and conditions actually encountered during sampling, and equipped with a temperature sensor (dial thermometer, or equivalent) capable of measuring temperature accurately to within 3 °C (5.4 °F). A critical orifice may be used in place of the DGM specified in this section provided that it is selected, calibrated, and used as specified in Section 16.0.

6.1.2 Barometer. Mercury, aneroid, or other barometer capable of measuring atmospheric pressure to within 2.5 mm Hg (0.1 in. Hg). See the **Note** in Method 5, Section 6.1.2.

6.1.3 Vacuum Gauge and Rotameter. At least 760-mm Hg (30-in. Hg) gauge and 0- to 40-ml/min rotameter, to be used for leak-check of the sampling train.

6.2 Sample Recovery. The following items are needed for sample recovery:

6.2.1 Wash Bottles. Two polyethylene or glass bottles, 500-ml.

6.2.2 Storage Bottles. Polyethylene bottles, 100-ml, to store impinger samples (one per sample).

6.3 Sample Analysis. The following equipment is needed for sample analysis:

6.3.1 Pipettes. Volumetric type, 5-ml, 20-ml (one needed per sample), and 25-ml sizes.

6.3.2 Volumetric Flasks. 100-ml size (one per sample) and 1000-ml size.

6.3.3 Burettes. 5- and 50-ml sizes.

6.3.4 Erlenmeyer Flasks. 250-ml size (one for each sample, blank, and standard).

6.3.5 Dropping Bottle. 125-ml size, to add indicator.

6.3.6 Graduated Cylinder. 100-ml size.

6.3.7 Spectrophotometer. To measure absorbance at 352 nm.

7.0 Reagents and Standards

Note: Unless otherwise indicated, all reagents must conform to the specifications established by the Committee on Analytical Reagents of the American Chemical Society. Where such specifications are not available, use the best available grade.

7.1 Sample Collection. The following reagents are required for sample collection:

7.1.1 Water. Deionized distilled to conform to ASTM Specification D 1193–77 or 91 Type 3 (incorporated by reference—see § 60.17). The $KMnO_4$ test for oxidizable organic matter may be omitted when high concentrations of organic matter are not expected to be present.

7.1.2 Isopropanol, 80 Percent by Volume. Mix 80 ml of isopropanol with 20 ml of water.

7.1.2.1 Check each lot of isopropanol for peroxide impurities as follows: Shake 10 ml of isopropanol with 10 ml of freshly prepared 10 percent potassium iodide solution. Prepare a blank by similarly treating 10 ml of water. After 1 minute, read the absorbance at 352 nm on a spectrophotometer using a 1-cm path length. If absorbance exceeds 0.1, reject alcohol for use.

7.1.2.2 Peroxides may be removed from isopropanol by redistilling or by passage through a column of activated alumina; however, reagent grade isopropanol with suitably low peroxide levels may be obtained from commercial sources. Rejection of contaminated lots may, therefore, be a more efficient procedure.

7.1.3 Hydrogen Peroxide (H_2O_2), 3 Percent by Volume. Add 10 ml of 30 percent H_2O_2 to 90 ml of water. Prepare fresh daily.

7.1.4 Potassium Iodide Solution, 10 Percent Weight by Volume (w/v). Dissolve 10.0 g of KI in water, and dilute to 100 ml. Prepare when needed.

7.2 Sample Recovery. The following reagents are required for sample recovery:

7.2.1 Water. Same as in Section 7.1.1.

7.2.2 Isopropanol, 80 Percent by Volume. Same as in Section 7.1.2.

7.3 Sample Analysis. The following reagents and standards are required for sample analysis:

7.3.1 Water. Same as in Section 7.1.1.

7.3.2 Isopropanol, 100 Percent.

7.3.3 Thorin Indicator. 1-(o-arsonophenylazo)-2-naphthol-3,6-disulfonic acid, disodium salt, or equivalent. Dissolve 0.20 g in 100 ml of water.

7.3.4 Barium Standard Solution, 0.0100 N. Dissolve 1.95 g of barium perchlorate trihydrate [$Ba(ClO_4)_2$ $3H_2O$] in 200 ml water, and dilute to 1 liter with isopropanol. Alternatively, 1.22 g of barium chloride dihydrate [$BaCl_2$ $2H_2O$] may be used instead of the barium perchlorate trihydrate. Standardize as in Section 10.5.

7.3.5 Sulfuric Acid Standard, 0.0100 N. Purchase or standardize to ±0.0002 N against 0.0100 N NaOH which has previously been standardized against potassium acid phthalate (primary standard grade).

7.3.6 Quality Assurance Audit Samples. When making compliance determinations, audit samples, if available must be obtained from the appropriate EPA Regional Office or from the responsible enforcement authority and analyzed in conjunction with the field samples.

Note: The responsible enforcement authority should be notified at least 30 days prior to the test date to allow sufficient time for sample delivery.

8.0 Sample Collection, Preservation, Storage and Transport

8.1 Preparation of Sampling Train. Measure 15 ml of 80 percent isopropanol into the midget bubbler and 15 ml of 3 percent H_2O_2 into each of the first two midget impingers. Leave the final midget impinger dry. Assemble the train as shown in Figure 6–1. Adjust the probe heater to a temperature sufficient to prevent water condensation. Place crushed ice and water around the impingers.

8.2 Sampling Train Leak-Check Procedure. A leak-check prior to the sampling run is recommended, but not required. A leak-check after the sampling run is mandatory. The leak-check procedure is as follows:

8.2.1 Temporarily attach a suitable (*e.g.,* 0- to 40- ml/min) rotameter to the outlet of the DGM, and place a vacuum gauge at or near the probe inlet. Plug the probe inlet, pull a vacuum of at least 250 mm Hg (10 in. Hg), and note the flow rate as indicated by the rotameter. A leakage rate in excess of 2 percent of the average sampling rate is not acceptable.

Note: Carefully (*i.e.,* slowly) release the probe inlet plug before turning off the pump.

8.2.2 It is suggested (not mandatory) that the pump be leak-checked separately, either prior to or after the sampling run. To leak-check the pump, proceed as follows: Disconnect the drying tube from the probe-impinger assembly. Place a vacuum gauge at the inlet to either the drying tube or the pump, pull a vacuum of 250 mm Hg (10 in. Hg), plug or pinch off the outlet of the flow meter, and then turn off the pump. The vacuum should remain stable for at least 30 seconds.

If performed prior to the sampling run, the pump leak-check shall precede the leak-check of the sampling train described immediately above; if performed after the sampling run, the pump leak-check shall follow the sampling train leak-check.

8.2.3 Other leak-check procedures may be used, subject to the approval of the Administrator.

8.3 Sample Collection.

8.3.1 Record the initial DGM reading and barometric pressure. To begin sampling, position the tip of the probe at the sampling point, connect the probe to the bubbler, and start the pump. Adjust the sample flow to a constant rate of approximately 1.0 liter/min as indicated by the rate meter. Maintain this constant rate (± 10 percent) during the entire sampling run.

8.3.2 Take readings (DGM volume, temperatures at DGM and at impinger outlet, and rate meter flow rate) at least every 5 minutes. Add more ice during the run to keep the temperature of the gases leaving the last impinger at 20°C (68 °F) or less.

8.3.3 At the conclusion of each run, turn off the pump, remove the probe from the stack, and record the final readings. Conduct a leak-check as described in Section 8.2. (This leak-check is mandatory.) If a leak is detected, void the test run or use procedures acceptable to the Administrator to adjust the sample volume for the leakage.

8.3.4 Drain the ice bath, and purge the remaining part of the train by drawing clean ambient air through the system for 15 minutes at the sampling rate. Clean ambient air can be provided by passing air through a charcoal filter or through an extra midget impinger containing 15 ml of 3 percent H_2O_2. Alternatively, ambient air without purification may be used.

8.4 Sample Recovery. Disconnect the impingers after purging. Discard the contents of the midget bubbler. Pour the contents of the midget impingers into a leak-free polyethylene bottle for shipment. Rinse the three midget impingers and the connecting tubes with water, and add the rinse to the same storage container. Mark the fluid level. Seal and identify the sample container.

9.0 Quality Control

Section	Quality control measure	Effect
7.1.2	Isopropanol check	Ensure acceptable level of peroxide impurities in isopropanol.
8.2, 10.1–10.4	Sampling equipment leak-check and calibration	Ensure accurate measurement of stack gas flow rate, sample volume.
10.5	Barium standard solution standardization	Ensure precision of normality determination.
11.2.3	Replicate titrations	Ensure precision of titration determinations
11.3	Audit sample analysis	Evaluate analyst's technique and standards preparation.

10.0 Calibration and Standardization

10.1 Volume Metering System.

10.1.1 Initial Calibration.

10.1.1.1 Before its initial use in the field, leak-check the metering system (drying tube, needle valve, pump, rate meter, and DGM) as follows: Place a vacuum gauge at the inlet to the drying tube and pull a vacuum of 250 mm Hg (10 in. Hg). Plug or pinch off the outlet of the flow meter, and then turn off the pump. The vacuum must remain stable for at least 30 seconds. Carefully release the vacuum gauge before releasing the flow meter end.

10.1.1.2 Remove the drying tube, and calibrate the metering system (at the sampling flow rate specified by the method) as follows: Connect an appropriately sized wet-test meter (*e.g.*, 1 liter per revolution) to the inlet of the needle valve. Make three independent calibration runs, using at least five revolutions of the DGM per run. Calculate the calibration factor Y (wet-test meter calibration volume divided by the DGM volume, both volumes adjusted to the same reference temperature and pressure) for each run, and average the results (Y_i). If any Y-value deviates by more than 2 percent from (Y_i), the metering system is unacceptable for use. If the metering system is acceptable, use (Y_i) as the calibration factor for subsequent test runs.

10.1.2 Post-Test Calibration Check. After each field test series, conduct a calibration check using the procedures outlined in Section 10.1.1.2, except that three or more revolutions of the DGM may be used, and only two independent runs need be made. If the average of the two post-test calibration factors does not deviate by more than 5 percent from Y_i, then Y_i is accepted as the DGM calibration factor (Y), which is used in Equation 6–1 to calculate collected sample volume (see Section 12.2). If the deviation is more than 5 percent, recalibrate the metering system as in Section 10.1.1, and determine a post-test calibration factor (Y_f). Compare Y_i and Y_f; the smaller of the two factors is accepted as the DGM calibration factor. If recalibration indicates that the metering system is unacceptable for use, either void the test run or use methods, subject to the approval of the Administrator, to determine an acceptable value for the collected sample volume.

10.1.3 DGM as a Calibration Standard. A DGM may be used as a calibration standard for volume measurements in place of the wet-test meter specified in Section 10.1.1.2, provided that it is calibrated initially and recalibrated periodically according to the same procedures outlined in Method 5, Section 10.3 with the following exceptions: (a) the DGM is calibrated against a wet-test meter having a capacity of 1 liter/rev (0.035 ft^3/rev) or 3 liters/rev (0.1 ft^3/rev) and having the capability of measuring volume to within 1 percent; (b) the DGM is calibrated at 1 liter/min (0.035 cfm); and (c) the meter box of the Method 6 sampling train is calibrated at the same flow rate.

10.2 Temperature Sensors. Calibrate against mercury-in-glass thermometers.

10.3 Rate Meter. The rate meter need not be calibrated, but should be cleaned and maintained according to the manufacturer's instructions.

10.4 Barometer. Calibrate against a mercury barometer.

10.5 Barium Standard Solution. Standardize the barium perchlorate or chloride solution against 25 ml of standard sulfuric acid to which 100 ml of 100 percent isopropanol has been added. Run duplicate analyses. Calculate the normality using the average of duplicate analyses where the titrations agree within 1 percent or 0.2 ml, whichever is larger.

11.0 Analytical Procedure

11.1 Sample Loss Check. Note level of liquid in container and confirm whether any sample was lost during shipment; note this finding on the analytical data sheet. If a noticeable amount of leakage has occurred, either void the sample or use methods, subject to the approval of the Administrator, to correct the final results.

11.2 Sample Analysis.

11.2.1 Transfer the contents of the storage container to a 100-ml volumetric flask, dilute to exactly 100 ml with water, and mix the diluted sample.

11.2.2 Pipette a 20-ml aliquot of the diluted sample into a 250-ml Erlenmeyer flask and add 80 ml of 100 percent isopropanol plus two to four drops of thorin indicator. While stirring the solution, titrate to a pink endpoint using 0.0100 N barium standard solution.

11.2.3 Repeat the procedures in Section 11.2.2, and average the titration volumes. Run a blank with each series of samples. Replicate titrations must agree within 1 percent or 0.2 ml, whichever is larger.

Note: Protect the 0.0100 N barium standard solution from evaporation at all times.

11.3 Audit Sample Analysis.

11.3.1 When the method is used to analyze samples to demonstrate compliance with a source emission regulation, an audit sample, if available, must be analyzed.

11.3.2 Concurrently analyze the audit sample and the compliance samples in the same manner to evaluate the technique of the analyst and the standards preparation.

11.3.3 The same analyst, analytical reagents, and analytical system must be used for the compliance samples and the audit sample. If this condition is met, duplicate auditing of subsequent compliance analyses for the same enforcement agency within a 30-day period is waived. An audit sample set may not be used to validate different sets of compliance samples under the jurisdiction of separate enforcement agencies, unless prior arrangements have been made with both enforcement agencies.

11.4 Audit Sample Results.

11.4.1 Calculate the audit sample concentrations and submit results using the instructions provided with the audit samples.

11.4.2 Report the results of the audit samples and the compliance determination samples along with their identification numbers, and the analyst's name to the responsible enforcement authority. Include this information with reports of any subsequent compliance analyses for the same enforcement authority during the 30-day period.

11.4.3 The concentrations of the audit samples obtained by the analyst must agree within 5 percent of the actual concentration. If the 5 percent specification is not met, reanalyze the compliance and audit samples, and include initial and reanalysis values in the test report.

11.4.4 Failure to meet the 5-percent specification may require retests until the audit problems are resolved. However, if the audit results do not affect the compliance or noncompliance status of the affected facility, the Administrator may waive the reanalysis requirement, further audits, or retests and accept the results of the compliance test. While steps are being taken to resolve audit analysis problems, the Administrator may also choose to use the data to determine the compliance or noncompliance status of the affected facility.

12.0 Data Analysis and Calculations

Carry out calculations, retaining at least one extra significant figure beyond that of the acquired data. Round off figures after final calculation.

12.1 Nomenclature.

C_a = Actual concentration of SO_2 in audit sample, mg/dscm.

C_d = Determined concentration of SO_2 in audit sample, mg/dscm.

C_{SO2} = Concentration of SO_2, dry basis, corrected to standard conditions, mg/dscm (lb/dscf).

N = Normality of barium standard titrant, meq/ml.

P_{bar} = Barometric pressure, mm Hg (in. Hg).

P_{std} = Standard absolute pressure, 760 mm Hg (29.92 in. Hg).

RE = Relative error of QA audit sample analysis, percent

T_m = Average DGM absolute temperature, °K (°R).

T_{std} = Standard absolute temperature, 293 °K (528 °R).

V_a = Volume of sample aliquot titrated, ml.

V_m = Dry gas volume as measured by the DGM, dcm (dcf).

$V_{m(std)}$ = Dry gas volume measured by the DGM, corrected to standard conditions, dscm (dscf).

V_{soln} = Total volume of solution in which the SO*2* sample is contained, 100 ml.

V_t = Volume of barium standard titrant used for the sample (average of replicate titration), ml.

V_{tb} = Volume of barium standard titrant used for the blank, ml.

Y = DGM calibration factor.

12.2 Dry Sample Gas Volume, Corrected to Standard Conditions.

$$V_{m(std)} = \frac{(V_m Y T_{std} P_{bar})}{(T_m P_{std})} = \frac{K_1 Y V_m P_{bar}}{T_m} \quad \text{Eq. 6-1}$$

Where:

K_1 = 0.3855 °K/mm Hg for metric units,
K_1 = 17.65 °R/in. Hg for English units.

12.3 SO_2 Concentration.

$$C_{so_2} = \frac{K_2 N (V_t - V_{tb})(V_{soln}/V_a)}{V_{m(std)}} \quad \text{Eq. 6-2}$$

Where:

K_2 = 32.03 mg SO_2/meq for metric units,
$K_2 = 7.061 \times 10^{-5}$ lb SO_2/meq for English units.

12.4 Relative Error for QA Audit Samples.

$$RE = \frac{100 (C_d - C_a)}{C_a} \quad \text{Eq. 6-3}$$

13.0 Method Performance

13.1 Range. The minimum detectable limit of the method has been determined to be 3.4 mg SO_2/m^3 (2.12×10^{-7} lb/ft^3). Although no upper limit has been established, tests have shown that concentrations as high as 80,000 mg/m^3 (0.005 lb/ft^3) of SO_2 can be collected efficiently at a rate of 1.0 liter/min (0.035 cfm) for 20 minutes in two midget impingers, each containing 15 ml of 3 percent H_2O_2. Based on theoretical calculations, the upper concentration limit in a 20 liter (0.7 ft^3) sample is about 93,300 mg/m^3 (0.00583 lb/ft^3).

14.0 Pollution Prevention. [Reserved]

15.0 Waste Management. [Reserved]

16.0 Alternative Procedures

16.1 Nomenclature. Same as Section 12.1, with the following additions:

B_{wa} = Water vapor in ambient air, proportion by volume.

M_a = Molecular weight of the ambient air saturated at impinger temperature, g/g-mole (lb/lb-mole).

M_s = Molecular weight of the sample gas saturated at impinger temperature, g/g-mole (lb/lb-mole).

P_c = Inlet vacuum reading obtained during the calibration run, mm Hg (in. Hg).
P_{sr} = Inlet vacuum reading obtained during the sampling run, mm Hg (in. Hg).
$\overline{Q}_{std}$ = Volumetric flow rate through critical orifice, scm/min (scf/min).
Q_{std} = Average flow rate of pre-test and post-test calibration runs, scm/min (scf/min).
T_{amb} = Ambient absolute temperature of air, °K (°R).
V_{sb} = Volume of gas as measured by the soap bubble meter, m^3 (ft^3).
$V_{sb(std)}$ = Volume of gas as measured by the soap bubble meter, corrected to standard conditions, scm (scf).
θ = Soap bubble travel time, min.
θ_s = Time, min.

16.2 Critical Orifices for Volume and Rate Measurements. A critical orifice may be used in place of the DGM specified in Section 6.1.1.10, provided that it is selected, calibrated, and used as follows:

16.2.1 Preparation of Sampling Train. Assemble the sampling train as shown in Figure 6–2. The rate meter and surge tank are optional but are recommended in order to detect changes in the flow rate.

Note: The critical orifices can be adapted to a Method 6 type sampling train as follows: Insert sleeve type, serum bottle stoppers into two reducing unions. Insert the needle into the stoppers as shown in Figure 6–3.

16.2.2 Selection of Critical Orifices.

16.2.2.1 The procedure that follows describes the use of hypodermic needles and stainless steel needle tubings, which have been found suitable for use as critical orifices. Other materials and critical orifice designs may be used provided the orifices act as true critical orifices, (*i.e.*, a critical vacuum can be obtained) as described in this section. Select a critical orifice that is sized to operate at the desired flow rate. The needle sizes and tubing lengths shown in Table 6–1 give the following approximate flow rates.

16.2.2.2 Determine the suitability and the appropriate operating vacuum of the critical orifice as follows: If applicable, temporarily attach a rate meter and surge tank to the outlet of the sampling train, if said equipment is not present (see Section 16.2.1). Turn on the pump and adjust the valve to give an outlet vacuum reading corresponding to about half of the atmospheric pressure. Observe the rate meter reading. Slowly increase the vacuum until a stable reading is obtained on the rate meter. Record the critical vacuum, which is the outlet vacuum when the rate meter first reaches a stable value. Orifices that do not reach a critical value must not be used.

16.2.3 Field Procedures.

16.2.3.1 Leak-Check Procedure. A leak-check before the sampling run is recommended, but not required. The leak-check procedure is as follows: Temporarily attach a suitable (*e.g.*, 0–40 ml/min) rotameter and surge tank, or a soap bubble meter and surge tank to the outlet of the pump. Plug the probe inlet, pull an outlet vacuum of at least 250 mm Hg (10 in. Hg), and note the flow rate as indicated by the rotameter or bubble meter. A leakage rate in excess of 2 percent of the average sampling rate ($\overline{Q}_{std}$) is not acceptable. Carefully release the probe inlet plug before turning off the pump.

16.2.3.2 Moisture Determination. At the sampling location, prior to testing, determine the percent moisture of the ambient air using the wet and dry bulb temperatures or, if appropriate, a relative humidity meter.

16.2.3.3 Critical Orifice Calibration. At the sampling location, prior to testing, calibrate the entire sampling train (*i.e.*, determine the flow rate of the sampling train when operated at critical conditions). Attach a 500-ml soap bubble meter to the inlet of the probe, and operate the sampling train at an outlet vacuum of 25 to 50 mm Hg (1 to 2 in. Hg) above the critical vacuum. Record the information listed in Figure 6–4. Calculate the standard volume of air measured by the soap bubble meter and the volumetric flow rate using the equations below:

$$V_{sb(std)} = V_{sb}\left(T_{std}/T_{amb}\right)\left(P_{bar}/P_{std}\right) \qquad \text{Eq. 6-4}$$

$$Q_{std} = \frac{V_{sb(std)}}{\theta} \qquad \text{Eq. 6-5}$$

16.2.3.4 Sampling.

16.2.3.4.1 Operate the sampling train for sample collection at the same vacuum used during the calibration run. Start the watch and pump simultaneously. Take readings (temperature, rate meter, inlet vacuum, and outlet vacuum) at least every 5 minutes. At the end of the sampling run, stop the watch and pump simultaneously.

16.2.3.4.2 Conduct a post-test calibration run using the calibration procedure outlined in Section 16.2.3.3. If the Q_{std} obtained before and after the test differ by more than 5 percent, void the test run; if not, calculate the volume of the gas measured with the critical orifice using Equation 6–6 as follows:

$$V_{m(std)} = \frac{\overline{Q}_{std}\ \theta_s\ \left(1-B_{wa}\right)\left(P_{bar}+P_{sr}\right)}{\left(P_{bar}+P_c\right)} \qquad \text{Eq. 6-6}$$

16.2.3.4.3 If the percent difference between the molecular weight of the ambient air at saturated conditions and the sample gas is more that ± 3 percent, then the molecular weight of the gas sample must be considered in the calculations using the following equation:

$$_{(std)} = \frac{\overline{Q}_{std}\ \theta_s\ \left(1-B_{wa}\right)\left(P_{bar}+P_{sr}\right)\left(M_a/M_s\right)^1}{\left(P_{bar}+P_c\right)} \qquad \text{Eq. 6-7}$$

Note: A post-test leak-check is not necessary because the post-test calibration run results will indicate whether there is any leakage.

16.2.3.4.4 Drain the ice bath, and purge the sampling train using the procedure described in Section 8.3.4.

16.3 Elimination of Ammonia Interference. The following alternative procedures must be used in addition to those specified in the method when

sampling at sources having ammonia emissions.

16.3.1 Sampling. The probe shall be maintained at 275 °C (527 °F) and equipped with a high-efficiency in-stack filter (glass fiber) to remove particulate matter. The filter material shall be unreactive to SO_2. Whatman 934AH (formerly Reeve Angel 934AH) filters treated as described in Reference 10 in Section 17.0 of Method 5 is an example of a filter that has been shown to work. Where alkaline particulate matter and condensed moisture are present in the gas stream, the filter shall be heated above the moisture dew point but below 225 °C (437 °F).

16.3.2 Sample Recovery. Recover the sample according to Section 8.4 except for discarding the contents of the midget bubbler. Add the bubbler contents, including the rinsings of the bubbler with water, to a separate polyethylene bottle from the rest of the sample. Under normal testing conditions where sulfur trioxide will not be present significantly, the tester may opt to delete the midget bubbler from the sampling train. If an approximation of the sulfur trioxide concentration is desired, transfer the contents of the midget bubbler to a separate polyethylene bottle.

16.3.3 Sample Analysis. Follow the procedures in Sections 11.1 and 11.2, except add 0.5 ml of 0.1 N HCl to the Erlenmeyer flask and mix before adding the indicator. The following analysis procedure may be used for an approximation of the sulfur trioxide concentration. The accuracy of the calculated concentration will depend upon the ammonia to SO_2 ratio and the level of oxygen present in the gas stream. A fraction of the SO_2 will be counted as sulfur trioxide as the ammonia to SO_2 ratio and the sample oxygen content increases. Generally, when this ratio is 1 or less and the oxygen content is in the range of 5 percent, less than 10 percent of the SO_2 will be counted as sulfur trioxide. Analyze the peroxide and isopropanol sample portions separately. Analyze the peroxide portion as described above. Sulfur trioxide is determined by difference using sequential titration of the isopropanol portion of the sample. Transfer the contents of the isopropanol storage container to a 100-ml volumetric flask, and dilute to exactly 100 ml with water. Pipette a 20-ml aliquot of this solution into a 250-ml Erlenmeyer flask, add 0.5 ml of 0.1 N HCl, 80 ml of 100 percent isopropanol, and two to four drops of thorin indicator. Titrate to a pink endpoint using 0.0100 N barium perchlorate. Repeat and average the titration volumes that agree within 1 percent or 0.2 ml, whichever is larger. Use this volume in Equation 6–2 to determine the sulfur trioxide concentration. From the flask containing the remainder of the isopropanol sample, determine the fraction of SO_2 collected in the bubbler by pipetting 20-ml aliquots into 250-ml Erlenmeyer flasks. Add 5 ml of 3 percent H_2O_2, 100 ml of 100 percent isopropanol, and two to four drips of thorin indicator, and titrate as before. From this titration volume, subtract the titrant volume determined for sulfur trioxide, and add the titrant volume determined for the peroxide portion. This final volume constitutes V_t, the volume of barium perchlorate used for the SO_2 sample.

17.0 References

1. Atmospheric Emissions from Sulfuric Acid Manufacturing Processes. U.S. DHEW, PHS, Division of Air Pollution. Public Health Service Publication No. 999–AP–13. Cincinnati, OH. 1965.

2. Corbett, P.F. The Determination of SO_2 and SO_3 in Flue Gases. Journal of the Institute of Fuel. *24*:237–243. 1961.

3. Matty, R.E., and E.K. Diehl. Measuring Flue-Gas SO_2 and SO_3. Power. *101*:94–97. November 1957.

4. Patton, W.F., and J.A. Brink, Jr. New Equipment and Techniques for Sampling Chemical Process Gases. J. Air Pollution Control Association. *13*:162. 1963.

5. Rom, J.J. Maintenance, Calibration, and Operation of Isokinetic Source Sampling Equipment. Office of Air Programs, U.S. Environmental Protection Agency. Research Triangle Park, NC. APTD–0576. March 1972.

6. Hamil, H.F., and D.E. Camann. Collaborative Study of Method for the Determination of Sulfur Dioxide Emissions from Stationary Sources (Fossil-Fuel Fired Steam Generators). U.S. Environmental Protection Agency, Research Triangle Park, NC. EPA–650/4–74–024. December 1973.

7. Annual Book of ASTM Standards. Part 31; Water, Atmospheric Analysis. American Society for Testing and Materials. Philadelphia, PA. 1974. pp. 40–42.

8. Knoll, J.E., and M.R. Midgett. The Application of EPA Method 6 to High Sulfur Dioxide Concentrations. U.S. Environmental Protection Agency. Research Triangle Park, NC. EPA–600/4–76–038. July 1976.

9. Westlin, P.R., and R.T. Shigehara. Procedure for Calibrating and Using Dry Gas Volume Meters as Calibration Standards. Source Evaluation Society Newsletter. *3*(1):17–30. February 1978.

10. Yu, K.K. Evaluation of Moisture Effect on Dry Gas Meter Calibration. Source Evaluation Society Newsletter. *5*(1):24–28. February 1980.

11. Lodge, J.P., Jr., *et al.* The Use of Hypodermic Needles as Critical Orifices in Air Sampling. J. Air Pollution Control Association. *16*:197–200. 1966.

12. Shigehara, R.T., and C.B. Sorrell. Using Critical Orifices as Method 5 CalibrationStandards. Source Evaluation Society Newsletter. *10*:4–15. August 1985.

13. Curtis, F., Analysis of Method 6 Samples in the Presence of Ammonia. Source Evaluation Society Newsletter. 13(1):9–15 February 1988.

18.0 Tables, Diagrams, Flowcharts and Validation Data

TABLE 6–1.—APPROXIMATE FLOW RATES FOR VARIOUS NEEDLE SIZES

Needle size (gauge)	Needle length (cm)	Flow rate (ml/min)
21	7.6	1,100
22	2.9	1,000
22	3.8	900
23	3.8	500
23	5.1	450
24	3.2	400

BILLING CODE 6560–50–P

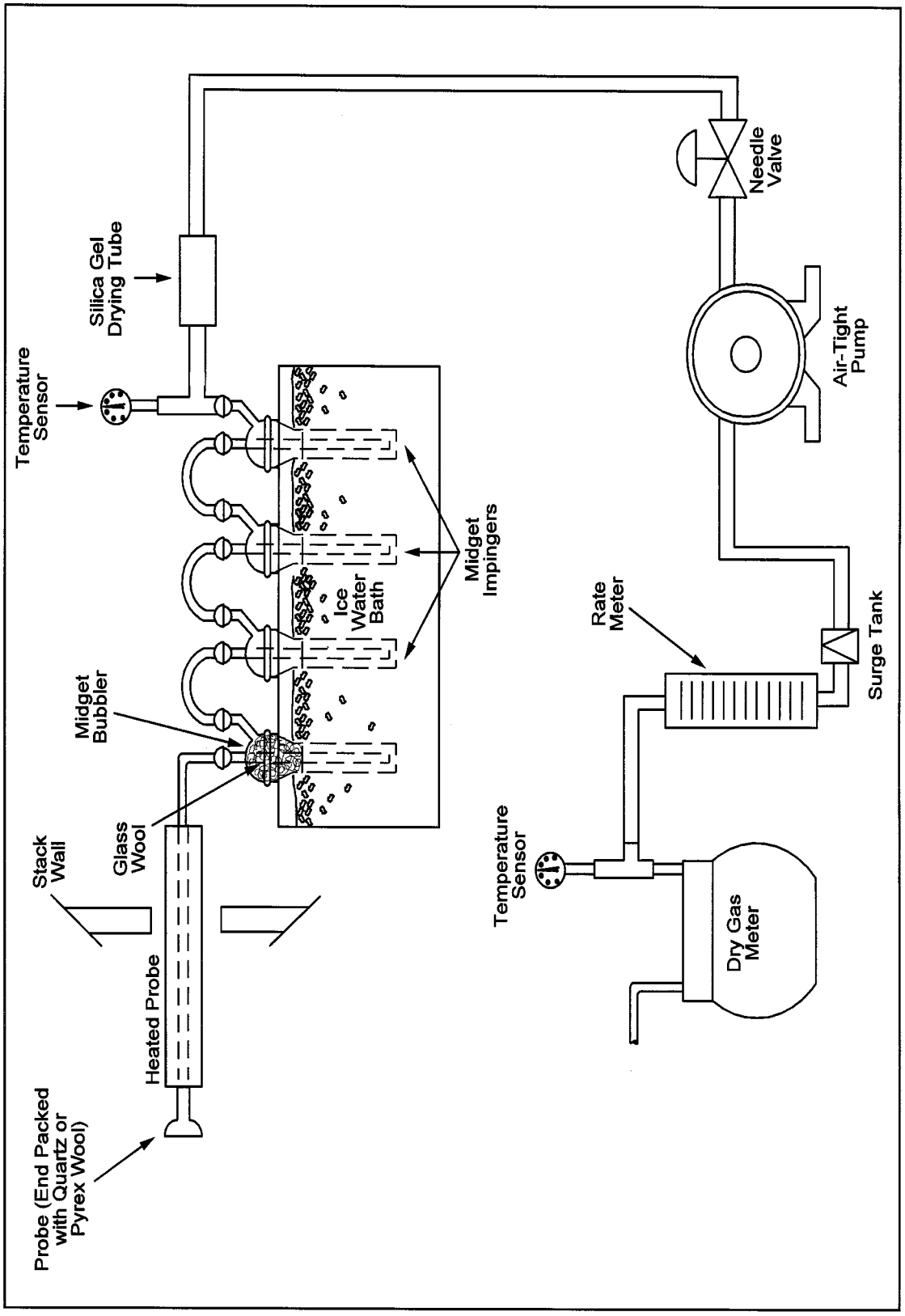

Figure 6-1. Sulfur Dioxide Sampling Train.

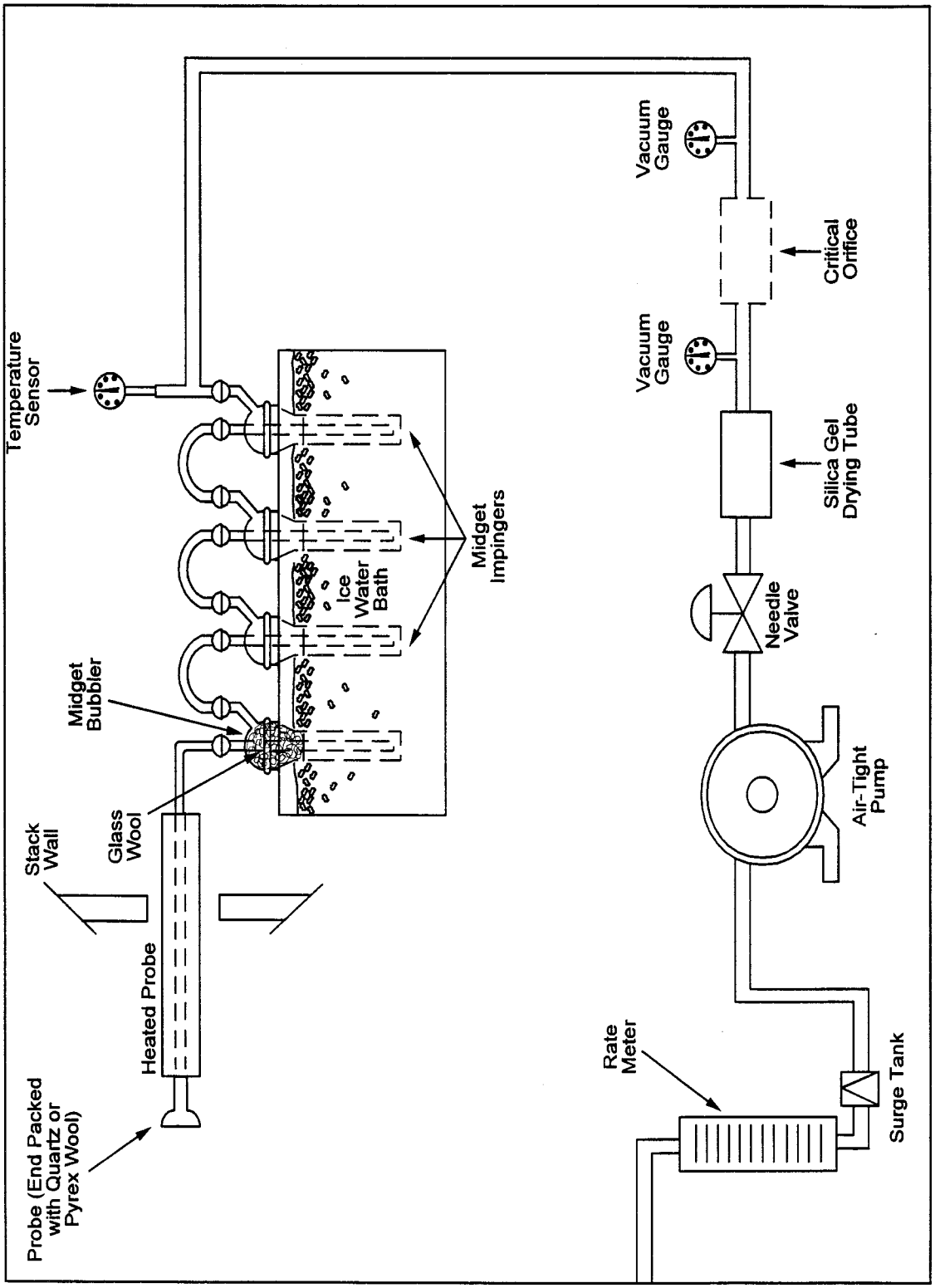

Figure 6-2. Sulfur Dioxide Sampling Train Using a Critical Orifice.

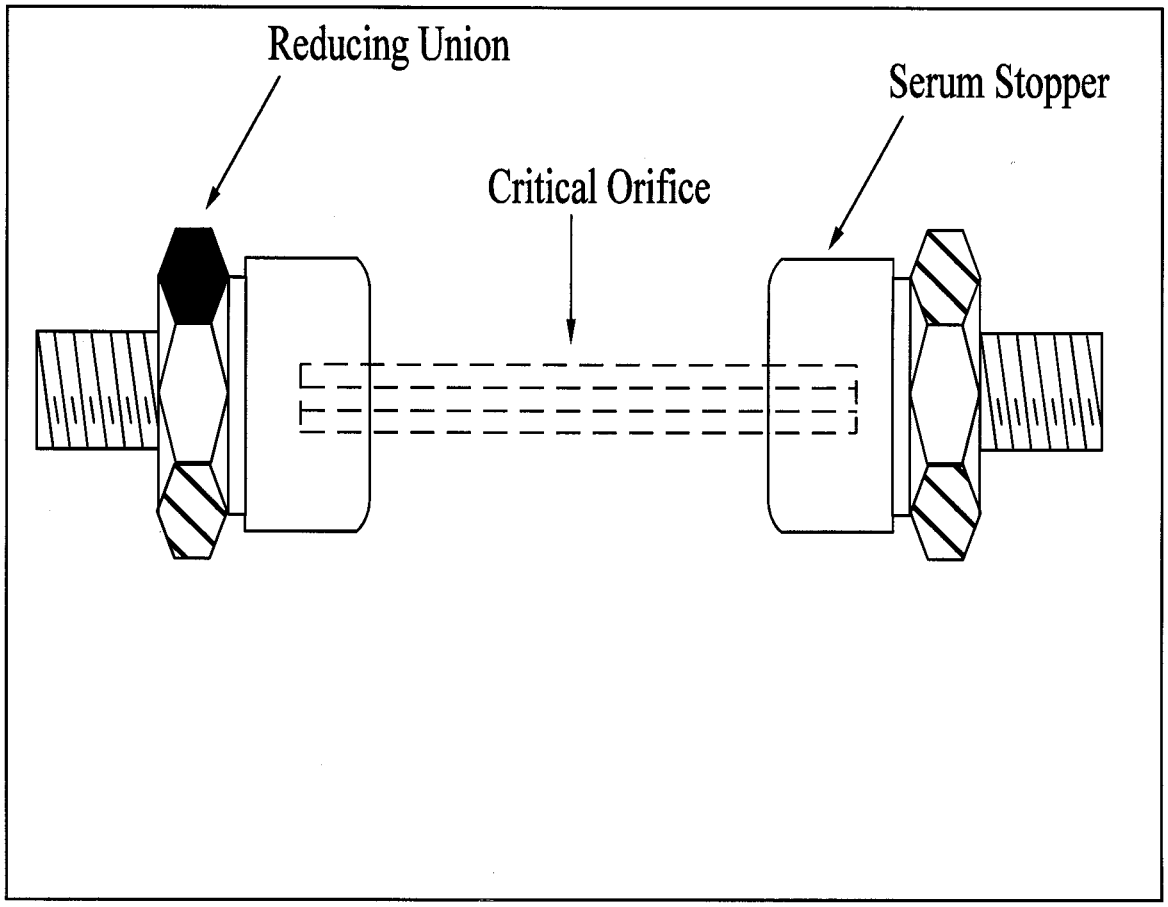

Figure 6-3. Critical Orifice Adaptation for the Method 6 Sampling Train.

Date _____ Train ID _____

Critical orifice size _____ Critical vacuum _____

		Pretest	Post-test
Soap bubble meter volume, V_{sb}	cc	_____	_____
	m^3 (ft^3)	_____	_____
Time, θ	sec	_____	_____
	min	_____	_____
Barometric pressure, P_{bar}	mm Hg (in. Hg)	_____	_____
Ambient temperature, t_{amb}	°C (°F)	_____	_____
Inlet vacuum, P_c	mm Hg (in. Hg)	_____	_____
Outlet vacuum	mm Hg (in. Hg)	_____	_____
$V_{sb(std)}$	m^3 (ft^3)	_____	_____
Flow rate, Q_{std}	$\frac{m^3}{min}\left(\frac{ft^3}{min}\right)$	_____	_____

Figure 6-4. Critical Orifice Calibration Data Sheet.

BILLING CODE 6560–50–P

Method 6A—Determination of Sulfur Dioxide, Moisture, and Carbon Dioxide From Fossil Fuel Combustion Sources

Note: This method does not include all of the specifications (*e.g.,* equipment and supplies) and procedures (*e.g.,* sampling and analytical) essential to its performance. Some material is incorporated by reference from other methods in this part. Therefore, to obtain reliable results, persons using this method should have a thorough knowledge of at least the following additional test methods: Method 1, Method 2, Method 3, Method 5, Method 6, and Method 19.

1.0 Scope and Application

1.1 Analytes.

Analyte	CAS No.	Sensitivity
SO_2	7449–09–05	3.4 mg SO_2/m^3 (2.12×10^{-7} lb/ft^3)
CO_2	124–38–9	N/A
H_2O	7732–18–5	N/A

1.2 Applicability. This method is applicable for the determination of sulfur dioxide (SO_2) emissions from fossil fuel combustion sources in terms of concentration (mg/dscm or lb/dscf) and in terms of emission rate (ng/J or lb/10^6 Btu) and for the determination of carbon dioxide (CO_2) concentration (percent). Moisture content (percent), if desired, may also be determined by this method.

1.3 Data Quality Objectives. Adherence to the requirements of this method will enhance the quality of the data obtained from air pollutant sampling methods.

2.0 Summary of Method

2.1 A gas sample is extracted from a sampling point in the stack. The SO_2 and the sulfur trioxide, including those fractions in any sulfur acid mist, are separated. The SO_2 fraction is measured by the barium-thorin titration method. Moisture and CO_2 fractions are collected in the same sampling train, and are determined gravimetrically.

3.0 Definitions. [Reserved]

4.0 Interferences

Same as Method 6, Section 4.0.

5.0 Safety

5.1 Disclaimer. This method may involve hazardous materials, operations, and equipment. This test method may not address all of the safety problems associated with its use. It is the responsibility of the user to establish appropriate safety and health practices and determine the applicability of regulatory limitations prior to performing this test method.

5.2 Corrosive reagents. Same as Method 6, Section 5.2.

6.0 Equipment and Supplies

6.1 Sample Collection. Same as Method 6, Section 6.1, with the exception of the following:

6.1.1 Sampling Train. A schematic of the sampling train used in this method is shown in Figure 6A–1.

6.1.1.1 Impingers and Bubblers. Two 30=ml midget impingers with a 1=mm restricted tip and two 30=ml midget bubblers with unrestricted tips. Other types of impingers and bubblers (*e.g.,* Mae West for SO_2 collection and rigid cylinders containing Drierite for moisture absorbers), may be used with proper attention to reagent volumes and levels, subject to the approval of the Administrator.

6.1.1.2 CO_2 Absorber. A sealable rigid cylinder or bottle with an inside diameter between 30 and 90 mm , a length between 125 and 250 mm, and appropriate connections at both ends. The filter may be a separate heated unit or may be within the heated portion of the probe. If the filter is within the sampling probe, the filter should not be within 15 cm of the probe inlet or any unheated section of the probe, such as the connection to the first bubbler. The probe and filter should be heated to at least 20 °C (68 °F) above the source temperature, but not greater than 120 °C (248 °F). The filter temperature (*i.e.,* the sample gas temperature) should be monitored to assure the desired temperature is maintained. A heated Teflon connector may be used to connect the filter holder or probe to the first impinger.

Note: For applications downstream of wet scrubbers, a heated out-of-stack filter (either borosilicate glass wool or glass fiber mat) is necessary.

6.2 Sample Recovery. Same as Method 6, Section 6.2.

6.3 Sample Analysis. Same as Method 6, Section 6.3, with the addition of a balance to measure within 0.05 g.

7.0 Reagents and Standards

Note: Unless otherwise indicated, all reagents must conform to the specifications established by the Committee on Analytical Reagents of the American Chemical Society. Where such specifications are not available, use the best available grade.

7.1 Sample Collection. Same as Method 6, Section 7.1, with the addition of the following:

7.1.1 Drierite. Anhydrous calcium sulfate ($CaSO_4$) desiccant, 8 mesh, indicating type is recommended.

Note: Do not use silica gel or similar desiccant in this application.

7.1.2 CO_2 Absorbing Material. Ascarite II. Sodium hydroxide-coated silica, 8- to 20-mesh.

7.2 Sample Recovery and Analysis. Same as Method 6, Sections 7.2 and 7.3, respectively.

8.0 Sample Collection, Preservation, Transport, and Storage

8.1 Preparation of Sampling Train.

8.1.1 Measure 15 ml of 80 percent isopropanol into the first midget bubbler and 15 ml of 3 percent hydrogen peroxide into each of the two midget impingers (the second and third vessels in the train) as described in Method 6, Section 8.1. Insert the glass wool into the top of the isopropanol bubbler as shown in Figure 6A–1. Place about 25 g of Drierite into the second midget bubbler (the fourth vessel in the train). Clean the outside of the bubblers and impingers and allow the vessels to reach room temperature. Weigh the four vessels simultaneously to the nearest 0.1 g, and record this initial weight (m_{wi}).

8.1.2 With one end of the CO_2 absorber sealed, place glass wool into the cylinder to a depth of about 1 cm (0.5 in.). Place about 150 g of CO_2 absorbing material in the cylinder on top of the glass wool, and fill the remaining space in the cylinder with glass wool. Assemble the cylinder as shown in Figure 6A–2. With the cylinder in a horizontal position, rotate it around the horizontal axis. The CO_2 absorbing material should remain in position during the rotation, and no open spaces or channels should be formed. If necessary, pack more glass wool into the cylinder to make the CO_2 absorbing material stable. Clean the outside of the cylinder of loose dirt and moisture and allow the cylinder to reach room temperature. Weigh the cylinder to the nearest 0.1 g, and record this initial weight (m_{ai}).

8.1.3 Assemble the train as shown in Figure 6A–1. Adjust the probe heater to a temperature sufficient to prevent condensation (see **Note** in Section 6.1). Place crushed ice and water around the impingers and bubblers. Mount the CO_2 absorber outside the water bath in a vertical flow position with the sample gas inlet at the bottom. Flexible tubing (*e.g.,* Tygon) may be used to connect the last SO_2 absorbing impinger to the moisture absorber and to connect the moisture absorber to the CO_2 absorber. A second, smaller CO_2 absorber containing Ascarite II may be added in-line downstream of the primary CO_2 absorber as a breakthrough indicator. Ascarite II turns white when CO_2 is absorbed.

8.2 Sampling Train Leak-Check Procedure and Sample Collection. Same as Method 6, Sections 8.2 and 8.3, respectively.

8.3 Sample Recovery.

8.3.1 Moisture Measurement. Disconnect the isopropanol bubbler, the SO_2 impingers, and the moisture absorber from the sample train. Allow about 10 minutes for them to reach room temperature, clean the outside of loose dirt and moisture, and weigh them simultaneously in the same manner as in Section 8.1. Record this final weight (m_{wf}).

8.3.2 Peroxide Solution. Discard the contents of the isopropanol bubbler and pour the contents of the midget impingers into a leak-free polyethylene bottle for shipping. Rinse the two midget impingers and connecting tubes with water, and add the washing to the same storage container.

8.3.3 CO_2 Absorber. Allow the CO_2 absorber to warm to room temperature (about 10 minutes), clean the outside of loose dirt and moisture, and weigh to the nearest 0.1 g in the same manner as in Section 8.1. Record this final weight (m_{af}). Discard used Ascarite II material.

9.0 Quality Control

Same as Method 6, Section 9.0.

10.0 Calibration and Standardization

Same as Method 6, Section 10.0.

11.0 Analytical Procedure

11.1 Sample Analysis. The sample analysis procedure for SO_2 is the same as that specified in Method 6, Section 11.0.

11.2 Quality Assurance (QA) Audit Samples. Analysis of QA audit samples is required only when this method is used for compliance determinations. Obtain an audit sample set as directed in Section 7.3.6 of Method 6. Analyze the audit samples, and report the results as directed in Section 11.3 of Method 6. Acceptance criteria for the audit results are the same as those in Method 6.

12.0 Data Analysis and Calculations

Same as Method 6, Section 12.0, with the addition of the following:

12.1 Nomenclature.

C_w = Concentration of moisture, percent.

C_{CO2} = Concentration of CO_2, dry basis, percent.

E_{SO2} = Emission rate of SO_2, ng/J (lb/10^6 Btu).

F_C = Carbon F-factor from Method 19 for the fuel burned, dscm/J (dscf/10^6 Btu).

m_{wi} = Initial weight of impingers, bubblers, and moisture absorber, g.

m_{wf} = Final weight of impingers, bubblers, and moisture absorber, g.

m_{ai} = Initial weight of CO_2 absorber, g.

m_{af} = Final weight of CO_2 absorber, g.

m_{SO2} = Mass of SO_2 collected, mg.

$V_{CO2(std)}$ = Equivalent volume of CO_2 collected at standard conditions, dscm (dscf).

$V_{w(std)}$ = Equivalent volume of moisture collected at standard conditions, scm (scf).

12.2 CO_2 Volume Collected, Corrected to Standard Conditions.

$$V_{CO_2(std)} = K_3\left(m_{af} - m_{ai}\right) \qquad \text{Eq. 6A-1}$$

Where:

K_3 = Equivalent volume of gaseous CO_2 at standard conditions, 5.467×10^{-4} dscm/g (1.930×10^{-2} dscf/g).

12.3 Moisture Volume Collected, Corrected to Standard Conditions.

$$V_{w(std)} = K_4\left(m_{wf} - m_{wi}\right) \qquad \text{Eq. 6A-2}$$

Where:

K_4 = Equivalent volume of water vapor at standard conditions, 1.336×10^{-3} scm/g (4.717×10^{-2} scf/g).

12.4 SO_2 Concentration.

$$C_{so_2} = \frac{K_2 N\left(V_t - V_{tb}\right)\left(V_{soln}/V_a\right)}{V_{m(std)} + V_{co_2(std)}} \qquad \text{Eq. 6A-3}$$

Where:

K_2 = 32.03 mg SO_2/meq. SO_2 (7.061×10^{-5} lb SO_2/meq. SO_2)

12.5 CO_2 Concentration.

$$C_{co_2} = \frac{V_{co_2(std)}}{V_{m(std)} + V_{co_2(std)}} \qquad \text{Eq. 6A-4}$$

12.6 Moisture Concentration.

$$C_w = \frac{V_{w(std)}}{V_{m(std)} + V_{w(std)} + V_{co_2(std)}} \qquad \text{Eq. 6A-5}$$

13.0 Method Performance

13.1 Range and Precision. The minimum detectable limit and the upper limit for the measurement of SO_2 are the same as for Method 6. For a 20-liter sample, this method has a precision of ±0.5 percent CO_2 for concentrations between 2.5 and 25 percent CO_2 and ±1.0 percent moisture for moisture concentrations greater than 5 percent.

14.0 Pollution Prevention [Reserved]

15.0 Waste Management. [Reserved]

16.0 Alternative Methods

If the only emission measurement desired is in terms of emission rate of SO_2 (ng/J or lb/10^6 Btu), an abbreviated

procedure may be used. The differences between the above procedure and the abbreviated procedure are described below.

16.1 Sampling Train. The sampling train is the same as that shown in Figure 6A–1 and as described in Section 6.1, except that the dry gas meter is not needed.

16.2 Preparation of the Sampling Train. Follow the same procedure as in Section 8.1, except do not weigh the isopropanol bubbler, the SO_2 absorbing impingers, or the moisture absorber.

16.3 Sampling Train Leak-Check Procedure and Sample Collection. Leak-check and operate the sampling train as described in Section 8.2, except that dry gas meter readings, barometric pressure, and dry gas meter temperatures need not be recorded during sampling.

16.4 Sample Recovery. Follow the procedure in Section 8.3, except do not weigh the isopropanol bubbler, the SO_2 absorbing impingers, or the moisture absorber.

16.5 Sample Analysis. Analysis of the peroxide solution and QA audit samples is the same as that described in Sections 11.1 and 11.2, respectively.

16.6 Calculations.

16.6.1 SO_2 Collected.

$$m_{SO_2} = K_2 N \left(V_t - V_{tb}\right)\left(V_{soln} / V_a\right) \qquad \text{Eq. 6A-6}$$

Where:

K_2 = 32.03 mg SO_2/meq. SO_2

$K_2 = 7.061 \times 10^{-5}$ lb SO_2/meq. SO_2

16.6.2 Sulfur Dioxide Emission Rate.

$$E_{SO_2} = K_5 F_c m_{so_2} / \left(m_{af} - m_{ai}\right) \qquad \text{Eq. 6A-7}$$

Where:

$K_5 = 1.829 \times 10^9$ mg/dscm

K_2 = 0.1142 lb/dscf

17.0 References

Same as Method 6, Section 17.0, References 1 through 8, with the addition of the following:

1. Stanley, Jon and P.R. Westlin. An Alternate Method for Stack Gas Moisture Determination. Source Evaluation Society Newsletter. *3*(4). November 1978.

2. Whittle, Richard N. and P.R. Westlin. Air Pollution Test Report: Development and Evaluation of an Intermittent Integrated SO_2/CO_2 Emission Sampling Procedure. Environmental Protection Agency, Emission Standard and Engineering Division, Emission Measurement Branch. Research Triangle Park, NC. December 1979. 14 pp.

BILLING CODE 6560–50–P

18.0 Tables, Diagrams, Flowcharts, and Validation Data

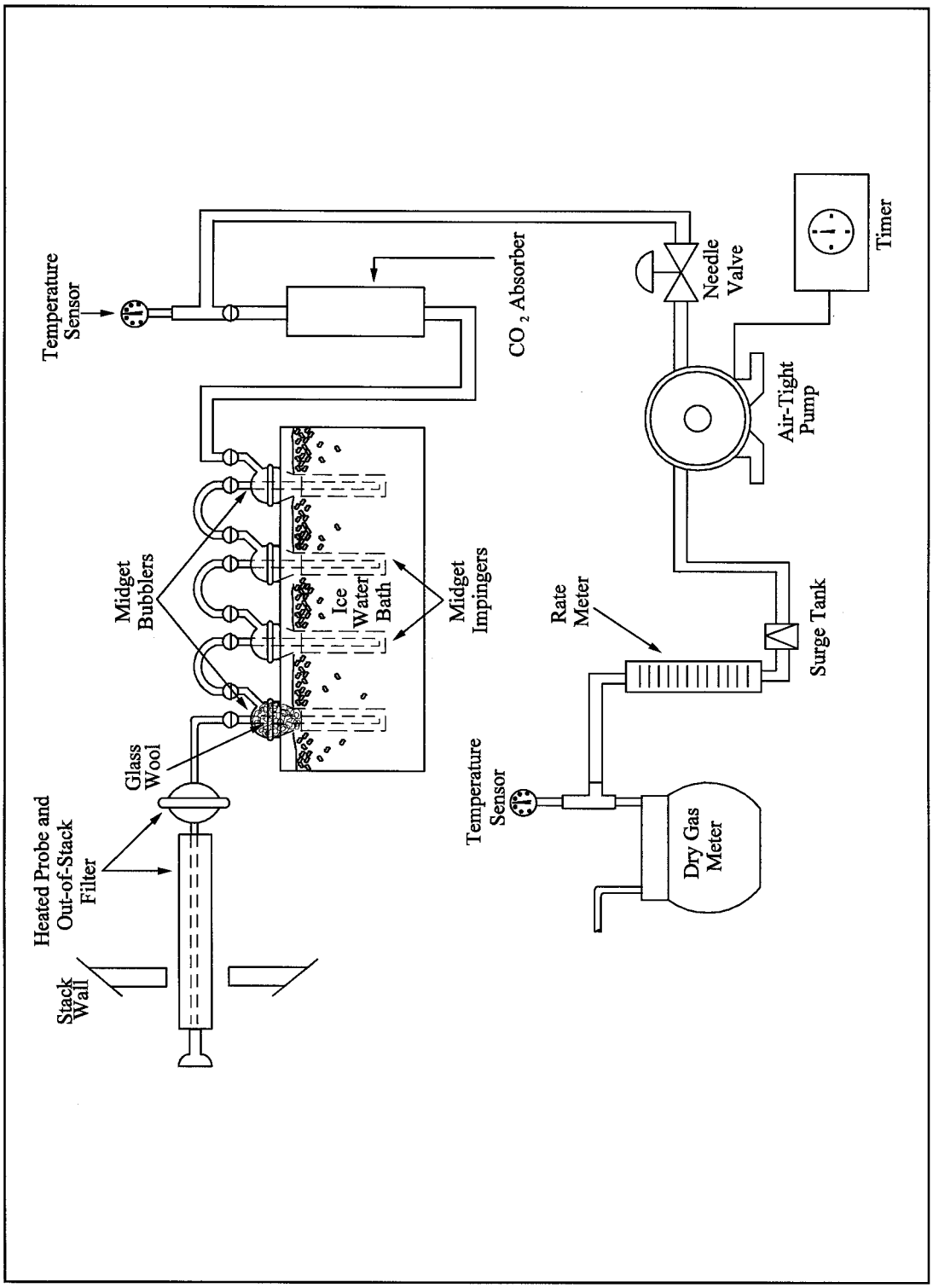

Figure 6A-1. Sampling train.

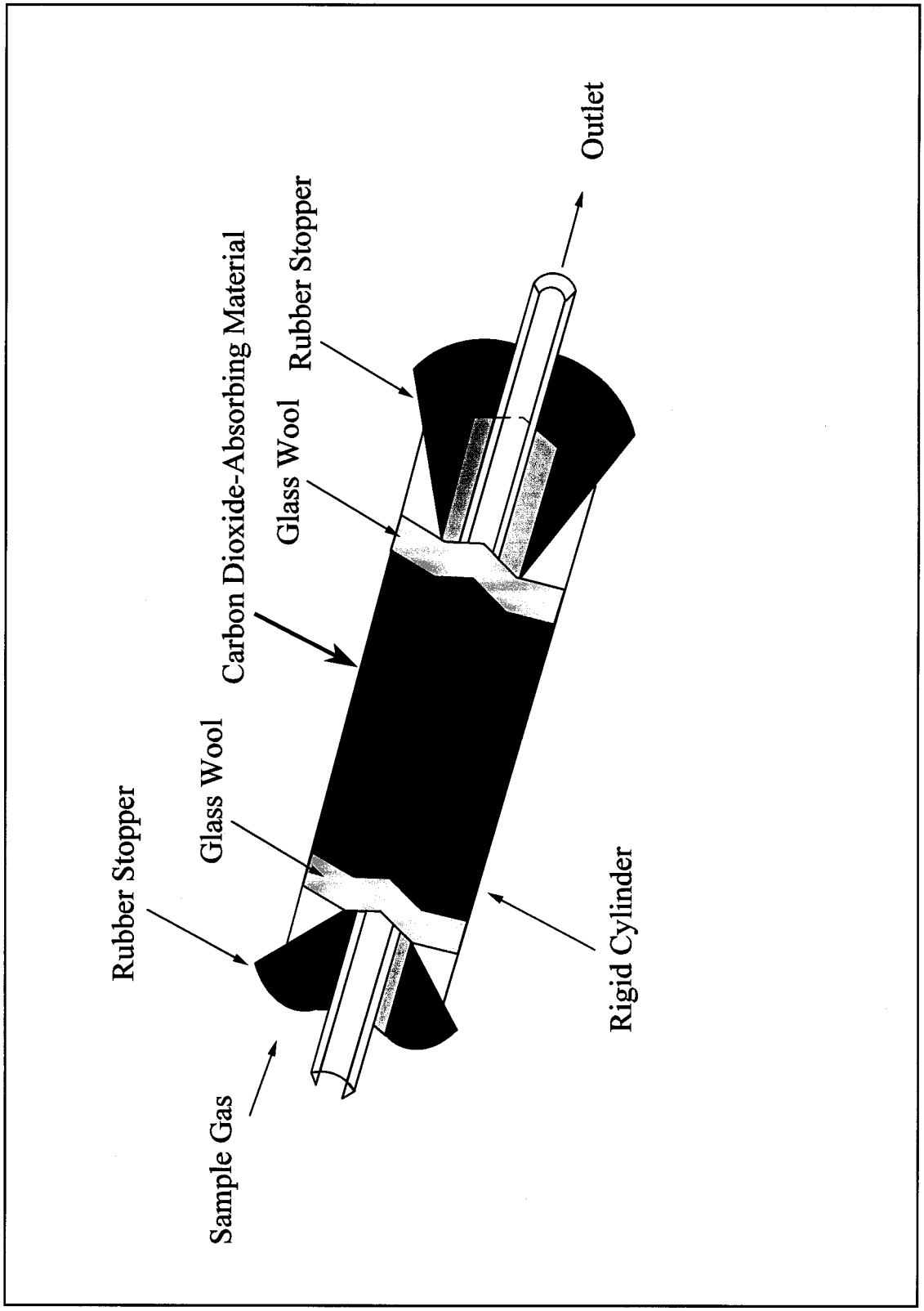

Figure 6A-2. CO_2 Absorber

BILLING CODE 6560–50–C

Method 6B—Determination of Sulfur Dioxide and Carbon Dioxide Daily Average Emissions From Fossil Fuel Combustion Sources

Note: This method does not include all of the specifications (*e.g.*, equipment and supplies) and procedures (*e.g.*, sampling and analytical) essential to its performance. Some material is incorporated by reference from other methods in this part. Therefore, to obtain reliable results, persons using this method should have a thorough knowledge of at least the following additional test methods: Method 1, Method 2, Method 3, Method 5, Method 6, and Method 6A.

1.0 Scope and Application

1.1 Analytes.

Analyte	CAS No.	Sensitivity
Sulfur dioxide (SO_2)	7449–09–05	3.4 mg SO_2/m^3 (2.12×10^{-7} lb/ft^3)
Carbon dioxide (CO_2)	124–38–9	N/A

1.2 Applicability. This method is applicable for the determination of SO_2 emissions from combustion sources in terms of concentration (ng/dscm or lb/dscf) and emission rate (ng/J or lb/10^6 Btu), and for the determination of CO_2 concentration (percent) on a daily (24 hours) basis.

1.3 Data Quality Objectives. Adherence to the requirements of this method will enhance the quality of the data obtained from air pollutant sampling methods.

2.0 Summary of Method

2.1 A gas sample is extracted from the sampling point in the stack intermittently over a 24-hour or other specified time period. The SO_2 fraction is measured by the barium-thorin titration method. Moisture and CO_2 fractions are collected in the same sampling train, and are determined gravimetrically.

3.0 Definitions. [Reserved]

4.0 Interferences

Same as Method 6, Section 4.0.

5.0 Safety

5.1 Disclaimer. This method may involve hazardous materials, operations, and equipment. This test method may not address all of the safety problems associated with its use. It is the responsibility of the user to establish appropriate safety and health practices and determine the applicability of regulatory limitations prior to performing this test method.

5.2 Corrosive Reagents. Same as Method 6, Section 5.2.

6.0 Equipment and Supplies

Same as Method 6A, Section 6.0, with the following exceptions and additions:

6.1 The isopropanol bubbler is not used. An empty bubbler for the collection of liquid droplets, that does not allow direct contact between the collected liquid and the gas sample, may be included in the sampling train.

6.2 For intermittent operation, include an industrial timer-switch designed to operate in the ''on'' position at least 2 minutes continuously and ''off'' the remaining period over a repeating cycle. The cycle of operation is designated in the applicable regulation. At a minimum, the sampling operation should include at least 12, equal, evenly-spaced periods per 24 hours.

6.3 Stainless steel sampling probes, type 316, are not recommended for use with Method 6B because of potential sample contamination due to corrosion. Glass probes or other types of stainless steel, *e.g.*, Hasteloy or Carpenter 20, are recommended for long-term use.

Note: For applications downstream of wet scrubbers, a heated out-of-stack filter (either borosilicate glass wool or glass fiber mat) is necessary. Probe and filter heating systems capable of maintaining a sample gas temperature of between 20 and 120 °C (68 and 248 °F) at the filter are also required in these cases. The electric supply for these heating systems should be continuous and separate from the timed operation of the sample pump.

7.0 Reagents and Standards

Same as Method 6A, Section 7.0, with the following exceptions:

7.1 Isopropanol is not used for sampling.

7.2 The hydrogen peroxide absorbing solution shall be diluted to no less than 6 percent by volume, instead of 3 percent as specified in Methods 6 and 6A.

7.3 If the Method 6B sampling train is to be operated in a low sample flow condition (less than 100 ml/min or 0.21 ft^3/hr), molecular sieve material may be substituted for Ascarite II as the CO_2 absorbing material. The recommended molecular sieve material is Union Carbide 1/16 inch pellets, 5 A°, or equivalent. Molecular sieve material need not be discarded following the sampling run, provided that it is regenerated as per the manufacturer's instruction. Use of molecular sieve material at flow rates higher than 100 ml/min (0.21 ft^3/hr) may cause erroneous CO_2 results.

8.0 Sample Collection, Preservation, Transport, and Storage

8.1 Preparation of Sampling Train. Same as Method 6A, Section 8.1, with the addition of the following:

8.1.1 The sampling train is assembled as shown in Figure 6A–1 of Method 6A, except that the isopropanol bubbler is not included.

8.1.2 Adjust the timer-switch to operate in the ''on'' position from 2 to 4 minutes on a 2-hour repeating cycle or other cycle specified in the applicable regulation. Other timer sequences may be used with the restriction that the total sample volume collected is between 25 and 60 liters (0.9 and 2.1 ft^3) for the amounts of sampling reagents prescribed in this method.

8.1.3 Add cold water to the tank until the impingers and bubblers are covered at least two-thirds of their length. The impingers and bubbler tank must be covered and protected from intense heat and direct sunlight. If freezing conditions exist, the impinger solution and the water bath must be protected.

Note: Sampling may be conducted continuously if a low flow-rate sample pump [20 to 40 ml/min (0.04 to 0.08 ft^3/hr) for the reagent volumes described in this method] is used. If sampling is continuous, the timer-switch is not necessary. In addition, if the sample pump is designed for constant rate sampling, the rate meter may be deleted. The total gas volume collected should be between 25 and 60 liters (0.9 and 2.1 ft^3) for the amounts of sampling reagents prescribed in this method.

8.2 Sampling Train Leak-Check Procedure. Same as Method 6, Section 8.2.

8.3 Sample Collection.

8.3.1 The probe and filter (either in-stack, out-of-stack, or both) must be heated to a temperature sufficient to prevent water condensation.

8.3.2 Record the initial dry gas meter reading. To begin sampling, position the tip of the probe at the sampling point, connect the probe to the first impinger (or filter), and start the timer and the sample pump. Adjust the sample flow to

a constant rate of approximately 1.0 liter/min (0.035 cfm) as indicated by the rotameter. Observe the operation of the timer, and determine that it is operating as intended (*i.e.,* the timer is in the ''on'' position for the desired period, and the cycle repeats as required).

8.3.3 One time between 9 a.m. and 11 a.m. during the 24-hour sampling period, record the dry gas meter temperature (T_m) and the barometric pressure ($P_{(bar)}$).

8.3.4 At the conclusion of the run, turn off the timer and the sample pump, remove the probe from the stack, and record the final gas meter volume reading. Conduct a leak-check as described in Section 8.2. If a leak is found, void the test run or use procedures acceptable to the Administrator to adjust the sample volume for leakage. Repeat the steps in Sections 8.3.1 to 8.3.4 for successive runs.

8.4 Sample Recovery. The procedures for sample recovery (moisture measurement, peroxide solution, and CO_2 absorber) are the same as those in Method 6A, Section 8.3.

9.0 Quality Control

Same as Method 6, Section 9.0., with the exception of the isopropanol-check.

10.0 Calibration and Standardization

Same as Method 6, Section 10.0, with the addition of the following:

10.1 Periodic Calibration Check. After 30 days of operation of the test train, conduct a calibration check according to the same procedures as the post-test calibration check (Method 6, Section 10.1.2). If the deviation between initial and periodic calibration factors exceeds 5 percent, use the smaller of the two factors in calculations for the preceding 30 days of data, but use the most recent calibration factor for succeeding test runs.

11.0 Analytical Procedures

11.1 Sample Loss Check and Analysis. Same as Method 6, Sections 11.1 and 11.2, respectively.

11.2 Quality Assurance (QA) Audit Samples. Analysis of QA audit samples is required only when this method is used for compliance determinations. Obtain an audit sample set as directed in Section 7.3.6 of Method 6. Analyze the audit samples at least once for every 30 days of sample collection, and report the results as directed in Section 11.3 of Method 6. The analyst performing the sample analyses shall perform the audit analyses. If more than one analyst performs the sample analyses during the 30-day sampling period, each analyst shall perform the audit analyses and all audit results shall be reported. Acceptance criteria for the audit results are the same as those in Method 6.

12.0 Data Analysis and Calculations

Same as Method 6A, Section 12.0, except that P_{bar} and T_m correspond to the values recorded in Section 8.3.3 of this method. The values are as follows:

P_{bar} = Initial barometric pressure for the test period, mm Hg.

T_m = Absolute meter temperature for the test period, °K.

13.0 Method Performance

13.1 Range.

13.1.1 Sulfur Dioxide. Same as Method 6.

13.1.2 Carbon Dioxide. Not determined.

13.2 Repeatability and Reproducibility. EPA-sponsored collaborative studies were undertaken to determine the magnitude of repeatability and reproducibility achievable by qualified testers following the procedures in this method. The results of the studies evolve from 145 field tests including comparisons with Methods 3 and 6. For measurements of emission rates from wet, flue gas desulfurization units in (ng/J), the repeatability (intra-laboratory precision) is 8.0 percent and the reproducibility (inter-laboratory precision) is 11.1 percent.

14.0 Pollution Prevention. [Reserved]

15.0 Waste Management. [Reserved]

16.0 Alternative Methods

Same as Method 6A, Section 16.0, except that the timer is needed and is operated as outlined in this method.

17.0 References

Same as Method 6A, Section 17.0, with the addition of the following:

1. Butler, Frank E., et. al. The Collaborative Test of Method 6B: Twenty-Four-Hour Analysis of SO_2 and CO_2. JAPCA. Vol. 33, No. 10. October 1983.

18.0 Tables, Diagrams, Flowcharts, and Validation Data. [Reserved]

* * * * *

Method 7—Determination of Nitrogen Oxide Emissions From Stationary Sources

Note: This method does not include all of the specifications (*e.g.,* equipment and supplies) and procedures (*e.g.,* sampling and analytical) essential to its performance. Some material is incorporated by reference from other methods in this part. Therefore, to obtain reliable results, persons using this method should have a thorough knowledge of at least the following additional test methods: Method 1 and Method 5.

1.0 Scope and Application

1.1 Analytes.

Analyte	CAS No.	Sensitivity
Nitrogen oxides (NO_X), as NO_2, including:		
Nitric oxide (NO)	10102–43–9	
Nitrogen dioxide (NO_2)	10102–44–0	2–400 mg/dscm

1.2 Applicability. This method is applicable for the measurement of nitrogen oxides (NO_X) emitted from stationary sources.

1.3 Data Quality Objectives. Adherence to the requirements of this method will enhance the quality of the data obtained from air pollutant sample methods.

2.0 Summary of Method

A grab sample is collected in an evacuated flask containing a dilute sulfuric acid-hydrogen peroxide absorbing solution, and the nitrogen oxides, except nitrous oxide, are measured colorimetrically using the phenoldisulfonic acid (PDS) procedure.

3.0 Definitions. [Reserved]

4.0 Interferences

Biased results have been observed when sampling under conditions of high sulfur dioxide concentrations (above 2000 ppm).

5.0 Safety

5.1 Disclaimer. This method may involve hazardous materials, operations, and equipment. This test method may not address all of the safety problems associated with its use. It is the responsibility of the user to establish appropriate safety and health practices and to determine the applicability of regulatory limitations prior to performing this test method.

5.2 Corrosive Reagents. The following reagents are hazardous.

Personal protective equipment and safe procedures are useful in preventing chemical splashes. If contact occurs, immediately flush with copious amounts of water for at least 15 minutes. Remove clothing under shower and decontaminate. Treat residual chemical burns as thermal burns.

5.2.1 Hydrogen Peroxide (H_2O_2). Irritating to eyes, skin, nose, and lungs.

5.2.2 Phenoldisulfonic Acid. Irritating to eyes and skin.

5.2.3 Sodium Hydroxide (NaOH). Causes severe damage to eyes and skin. Inhalation causes irritation to nose, throat, and lungs. Reacts exothermically with limited amounts of water.

5.2.4 Sulfuric Acid (H_2SO_4). Rapidly destructive to body tissue. Will cause third degree burns. Eye damage may result in blindness. Inhalation may be fatal from spasm of the larynx, usually within 30 minutes. May cause lung tissue damage with edema. 1 mg/m^3 for 8 hours will cause lung damage or, in higher concentrations, death. Provide ventilation to limit inhalation. Reacts violently with metals and organics.

5.2.5 Phenol. Poisonous and caustic. Do not handle with bare hands as it is absorbed through the skin.

6.0 Equipment and Supplies

6.1 Sample Collection. A schematic of the sampling train used in performing this method is shown in Figure 7–1. Other grab sampling systems or equipment, capable of measuring sample volume to within 2.0 percent and collecting a sufficient sample volume to allow analytical reproducibility to within 5 percent, will be considered acceptable alternatives, subject to the approval of the Administrator. The following items are required for sample collection:

6.1.1 Probe. Borosilicate glass tubing, sufficiently heated to prevent water condensation and equipped with an in-stack or heated out-of-stack filter to remove particulate matter (a plug of glass wool is satisfactory for this purpose). Stainless steel or Teflon tubing may also be used for the probe. Heating is not necessary if the probe remains dry during the purging period.

6.1.2 Collection Flask. Two-liter borosilicate, round bottom flask, with short neck and 24/40 standard taper opening, protected against implosion or breakage.

6.1.3 Flask Valve. T-bore stopcock connected to a 24/40 standard taper joint.

6.1.4 Temperature Gauge. Dial-type thermometer, or other temperature gauge, capable of measuring 1 °C (2 °F) intervals from −5 to 50 °C (23 to 122 °F).

6.1.5 Vacuum Line. Tubing capable of withstanding a vacuum of 75 mm (3 in.) Hg absolute pressure, with ''T'' connection and T-bore stopcock.

6.1.6 Vacuum Gauge. U-tube manometer, 1 meter (39 in.), with 1 mm (0.04 in.) divisions, or other gauge capable of measuring pressure to within 2.5 mm (0.10 in.) Hg.

6.1.7 Pump. Capable of evacuating the collection flask to a pressure equal to or less than 75 mm (3 in.) Hg absolute.

6.1.8 Squeeze Bulb. One-way.

6.1.9 Volumetric Pipette. 25-ml.

6.1.10 Stopcock and Ground Joint Grease. A high-vacuum, high-temperature chlorofluorocarbon grease is required. Halocarbon 25–5S has been found to be effective.

6.1.11 Barometer. Mercury, aneroid, or other barometer capable of measuring atmospheric pressure to within 2.5 mm (0.1 in.) Hg. See **NOTE** in Method 5, Section 6.1.2.

6.2 Sample Recovery. The following items are required for sample recovery:

6.2.1 Graduated Cylinder. 50-ml with 1 ml divisions.

6.2.2 Storage Containers. Leak-free polyethylene bottles.

6.2.3 Wash Bottle. Polyethylene or glass.

6.2.4 Glass Stirring Rod.

6.2.5 Test Paper for Indicating pH. To cover the pH range of 7 to 14.

6.3 Analysis. The following items are required for analysis:

6.3.1 Volumetric Pipettes. Two 1-ml, two 2-ml, one 3-ml, one 4-ml, two 10-ml, and one 25-ml for each sample and standard.

6.3.2 Porcelain Evaporating Dishes. 175- to 250-ml capacity with lip for pouring, one for each sample and each standard. The Coors No. 45006 (shallowform, 195-ml) has been found to be satisfactory. Alternatively, polymethyl pentene beakers (Nalge No. 1203, 150-ml), or glass beakers (150-ml) may be used. When glass beakers are used, etching of the beakers may cause solid matter to be present in the analytical step; the solids should be removed by filtration.

6.3.3 Steam Bath. Low-temperature ovens or thermostatically controlled hot plates kept below 70 °C (160 °F) are acceptable alternatives.

6.3.4 Dropping Pipette or Dropper. Three required.

6.3.5 Polyethylene Policeman. One for each sample and each standard.

6.3.6 Graduated Cylinder. 100-ml with 1-ml divisions.

6.3.7 Volumetric Flasks. 50-ml (one for each sample and each standard), 100-ml (one for each sample and each standard, and one for the working standard KNO_3 solution), and 1000-ml (one).

6.3.8 Spectrophotometer. To measure at 410 nm.

6.3.9 Graduated Pipette. 10-ml with 0.1-ml divisions.

6.3.10 Test Paper for Indicating pH. To cover the pH range of 7 to 14.

6.3.11 Analytical Balance. To measure to within 0.1 mg.

7.0 Reagents and Standards

Unless otherwise indicated, it is intended that all reagents conform to the specifications established by the Committee on Analytical Reagents of the American Chemical Society, where such specifications are available; otherwise, use the best available grade.

7.1 Sample Collection. The following reagents are required for sampling:

7.1.1 Water. Deionized distilled to conform to ASTM D 1193–77 or 91 Type 3 (incorporated by reference—see § 60.17). The $KMnO_4$ test for oxidizable organic matter may be omitted when high concentrations of organic matter are not expected to be present.

7.1.2 Absorbing Solution. Cautiously add 2.8 ml concentrated H_2SO_4 to a 1-liter flask partially filled with water. Mix well, and add 6 ml of 3 percent hydrogen peroxide, freshly prepared from 30 percent hydrogen peroxide solution. Dilute to 1 liter of water and mix well. The absorbing solution should be used within 1 week of its preparation. Do not expose to extreme heat or direct sunlight.

7.2 Sample Recovery. The following reagents are required for sample recovery:

7.2.1 Water. Same as in 7.1.1.

7.2.2 Sodium Hydroxide, 1 N. Dissolve 40 g NaOH in water, and dilute to 1 liter.

7.3 Analysis. The following reagents and standards are required for analysis:

7.3.1 Water. Same as in 7.1.1.

7.3.2 Fuming Sulfuric Acid. 15 to 18 percent by weight free sulfur trioxide. HANDLE WITH CAUTION.

7.3.3 Phenol. White solid.

7.3.4 Sulfuric Acid. Concentrated, 95 percent minimum assay.

7.3.5 Potassium Nitrate (KNO_3). Dried at 105 to 110 °C (221 to 230 °F) for a minimum of 2 hours just prior to preparation of standard solution.

7.3.6 Standard KNO_3 Solution. Dissolve exactly 2.198 g of dried KNO_3 in water, and dilute to 1 liter with water in a 1000-ml volumetric flask.

7.3.7 Working Standard KNO_3 Solution. Dilute 10 ml of the standard solution to 100 ml with water. One ml of the working standard solution is equivalent to 100 μg nitrogen dioxide (NO_2).

7.3.8 Phenoldisulfonic Acid Solution. Dissolve 25 g of pure white phenol solid in 150 ml concentrated sulfuric acid on a steam bath. Cool, add 75 ml fuming sulfuric acid (15 to 18 percent by weight free sulfur trioxide—HANDLE WITH CAUTION), and heat at 100 °C (212 °F) for 2 hours. Store in a dark, stoppered bottle.

7.3.9 Concentrated Ammonium Hydroxide.

7.3.10 Quality Assurance Audit Samples. When making compliance determinations, and upon availability, audit samples may be obtained from the appropriate EPA Regional Office or from the responsible enforcement authority.

Note: The responsible enforcement authority should be notified at least 30 days prior to the test date to allow sufficient time for sample delivery.

8.0 Sample Collection, Preservation, Storage and Transport

8.1 Sample Collection.

8.1.1 Flask Volume. The volume of the collection flask and flask valve combination must be known prior to sampling. Assemble the flask and flask valve, and fill with water to the stopcock. Measure the volume of water to ±10 ml. Record this volume on the flask.

8.1.2 Pipette 25 ml of absorbing solution into a sample flask, retaining a sufficient quantity for use in preparing the calibration standards. Insert the flask valve stopper into the flask with the valve in the ''purge'' position. Assemble the sampling train as shown in Figure 7–1, and place the probe at the sampling point. Make sure that all fittings are tight and leak-free, and that all ground glass joints have been greased properly with a high-vacuum, high temperature chlorofluorocarbon-based stopcock grease. Turn the flask valve and the pump valve to their ''evacuate'' positions. Evacuate the flask to 75 mm (3 in.) Hg absolute pressure, or less. Evacuation to a pressure approaching the vapor pressure of water at the existing temperature is desirable. Turn the pump valve to its ''vent'' position, and turn off the pump. Check for leakage by observing the manometer for any pressure fluctuation. (Any variation greater than 10 mm (0.4 in.) Hg over a period of 1 minute is not acceptable, and the flask is not to be used until the leakage problem is corrected. Pressure in the flask is not to exceed 75 mm (3 in.) Hg absolute at the time sampling is commenced.) Record the volume of the flask and valve (V_f), the flask temperature (T_i), and the barometric pressure. Turn the flask valve counterclockwise to its ''purge'' position, and do the same with the pump valve. Purge the probe and the vacuum tube using the squeeze bulb. If condensation occurs in the probe and the flask valve area, heat the probe, and purge until the condensation disappears. Next, turn the pump valve to its ''vent'' position. Turn the flask valve clockwise to its ''evacuate'' position, and record the difference in the mercury levels in the manometer. The absolute internal pressure in the flask (P_i) is equal to the barometric pressure less the manometer reading. Immediately turn the flask valve to the ''sample'' position, and permit the gas to enter the flask until pressures in the flask and sample line (*i.e.,* duct, stack) are equal. This will usually require about 15 seconds; a longer period indicates a plug in the probe, which must be corrected before sampling is continued. After collecting the sample, turn the flask valve to its ''purge'' position, and disconnect the flask from the sampling train.

8.1.3 Shake the flask for at least 5 minutes.

8.1.4 If the gas being sampled contains insufficient oxygen for the conversion of NO to NO_2 (*e.g.,* an applicable subpart of the standards may require taking a sample of a calibration gas mixture of NO in N_2), then introduce oxygen into the flask to permit this conversion. Oxygen may be introduced into the flask by one of three methods: (1) Before evacuating the sampling flask, flush with pure cylinder oxygen, then evacuate flask to 75 mm (3 in.) Hg absolute pressure or less; or (2) inject oxygen into the flask after sampling; or (3) terminate sampling with a minimum of 50 mm (2 in.) Hg vacuum remaining in the flask, record this final pressure, and then vent the flask to the atmosphere until the flask pressure is almost equal to atmospheric pressure.

8.2 Sample Recovery. Let the flask sit for a minimum of 16 hours, and then shake the contents for 2 minutes.

8.2.1 Connect the flask to a mercury filled U-tube manometer. Open the valve from the flask to the manometer, and record the flask temperature (T_f), the barometric pressure, and the difference between the mercury levels in the manometer. The absolute internal pressure in the flask (P_f) is the barometric pressure less the manometer reading. Transfer the contents of the flask to a leak-free polyethylene bottle. Rinse the flask twice with 5 ml portions of water, and add the rinse water to the bottle. Adjust the pH to between 9 and 12 by adding 1 N NaOH, dropwise (about 25 to 35 drops). Check the pH by dipping a stirring rod into the solution and then touching the rod to the pH test paper. Remove as little material as possible during this step. Mark the height of the liquid level so that the container can be checked for leakage after transport. Label the container to identify clearly its contents. Seal the container for shipping.

9.0 Quality Control

Section	Quality control measure	Effect
10.1	Spectrophotometer calibration	Ensure linearity of spectrophotometer response to standards.
11.4	Audit sample analysis	Evaluate analytical technique, preparation of standards.

10.0 Calibration and Standardization

10.1 Spectrophotometer.

10.1.1 Optimum Wavelength Determination.

10.1.1.1 Calibrate the wavelength scale of the spectrophotometer every 6 months. The calibration may be accomplished by using an energy source with an intense line emission such as a mercury lamp, or by using a series of glass filters spanning the measuring range of the spectrophotometer. Calibration materials are available commercially and from the National Institute of Standards and Technology. Specific details on the use of such materials should be supplied by the vendor; general information about calibration techniques can be obtained from general reference books on analytical chemistry. The wavelength scale of the spectrophotometer must read correctly within 5 nm at all calibration points; otherwise, repair and recalibrate the spectrophotometer. Once the wavelength scale of the spectrophotometer is in proper calibration, use 410 nm as the optimum wavelength for the measurement of the absorbance of the standards and samples.

10.1.1.2 Alternatively, a scanning procedure may be employed to determine the proper measuring wavelength. If the instrument is a double-beam spectrophotometer, scan the spectrum between 400 and 415 nm

using a 200 μg NO_2 standard solution in the sample cell and a blank solution in the reference cell. If a peak does not occur, the spectrophotometer is probably malfunctioning and should be repaired. When a peak is obtained within the 400 to 415 nm range, the wavelength at which this peak occurs shall be the optimum wavelength for the measurement of absorbance of both the standards and the samples. For a single-beam spectrophotometer, follow the scanning procedure described above, except scan separately the blank and standard solutions. The optimum wavelength shall be the wavelength at which the maximum difference in absorbance between the standard and the blank occurs.

10.1.2 Determination of Spectrophotometer Calibration Factor K_c. Add 0 ml, 2.0 ml, 4.0 ml, 6.0 ml, and 8.0 ml of the KNO_3 working standard solution (1 ml = 100 μg NO_2) to a series of five 50-ml volumetric flasks. To each flask, add 25 ml of absorbing solution and 10 ml water. Add 1 N NaOH to each flask until the pH is between 9 and 12 (about 25 to 35 drops). Dilute to the mark with water. Mix thoroughly, and pipette a 25-ml aliquot of each solution into a separate porcelain evaporating dish. Beginning with the evaporation step, follow the analysis procedure of Section 11.2 until the solution has been transferred to the 100-ml volumetric flask and diluted to the mark. Measure the absorbance of each solution at the optimum wavelength as determined in Section 10.2.1. This calibration procedure must be repeated on each day that samples are analyzed. Calculate the spectrophotometer calibration factor as shown in Section 12.2.

10.1.3 Spectrophotometer Calibration Quality Control. Multiply the absorbance value obtained for each standard by the K_c factor (reciprocal of the least squares slope) to determine the distance each calibration point lies from the theoretical calibration line. The difference between the calculated concentration values and the actual concentrations (*i.e.,* 100, 200, 300, and 400 μg NO_2) should be less than 7 percent for all standards.

10.2 Barometer. Calibrate against a mercury barometer.

10.3 Temperature Gauge. Calibrate dial thermometers against mercury-in-glass thermometers.

10.4 Vacuum Gauge. Calibrate mechanical gauges, if used, against a mercury manometer such as that specified in Section 6.1.6.

10.5 Analytical Balance. Calibrate against standard weights.

11.0 Analytical Procedures

11.1 Sample Loss Check. Note the level of the liquid in the container, and confirm whether any sample was lost during shipment. Note this on the analytical data sheet. If a noticeable amount of leakage has occurred, either void the sample or use methods, subject to the approval of the Administrator, to correct the final results.

11.2 Sample Preparation. Immediately prior to analysis, transfer the contents of the shipping container to a 50 ml volumetric flask, and rinse the container twice with 5 ml portions of water. Add the rinse water to the flask, and dilute to mark with water; mix thoroughly. Pipette a 25-ml aliquot into the porcelain evaporating dish. Return any unused portion of the sample to the polyethylene storage bottle. Evaporate the 25-ml aliquot to dryness on a steam bath, and allow to cool. Add 2 ml phenoldisulfonic acid solution to the dried residue, and triturate thoroughly with a polyethylene policeman. Make sure the solution contacts all the residue. Add 1 ml water and 4 drops of concentrated sulfuric acid. Heat the solution on a steam bath for 3 minutes with occasional stirring. Allow the solution to cool, add 20 ml water, mix well by stirring, and add concentrated ammonium hydroxide, dropwise, with constant stirring, until the pH is 10 (as determined by pH paper). If the sample contains solids, these must be removed by filtration (centrifugation is an acceptable alternative, subject to the approval of the Administrator) as follows: Filter through Whatman No. 41 filter paper into a 100-ml volumetric flask. Rinse the evaporating dish with three 5-ml portions of water. Filter these three rinses. Wash the filter with at least three 15-ml portions of water. Add the filter washings to the contents of the volumetric flask, and dilute to the mark with water. If solids are absent, the solution can be transferred directly to the 100-ml volumetric flask and diluted to the mark with water.

11.3 Sample Analysis. Mix the contents of the flask thoroughly, and measure the absorbance at the optimum wavelength used for the standards (Section 10.2.1), using the blank solution as a zero reference. Dilute the sample and the blank with equal volumes of water if the absorbance exceeds A_4, the absorbance of the 400-μg NO_2 standard (see Section 10.2.2).

11.4 Audit Sample Analysis.

11.4.1 When the method is used to analyze samples to demonstrate compliance with a source emission regulation, an audit sample must be analyzed, subject to availability.

11.4.2 Concurrently analyze the audit sample and the compliance samples in the same manner to evaluate the technique of the analyst and the standards preparation.

11.4.3 The same analyst, analytical reagents, and analytical system must be used for the compliance samples and the audit sample. If this condition is met, duplicate auditing of subsequent compliance analyses for the same enforcement agency within a 30-day period is waived. An audit sample set may not be used to validate different sets of compliance samples under the jurisdiction of separate enforcement agencies, unless prior arrangements have been made with both enforcement agencies.

11.5 Audit Sample Results.

11.5.1 Calculate the audit sample concentrations and submit results using the instructions provided with the audit samples.

11.5.2 Report the results of the audit samples and the compliance determination samples along with their identification numbers, and the analyst's name to the responsible enforcement authority. Include this information with reports of any subsequent compliance analyses for the same enforcement authority during the 30-day period.

11.5.3 The concentrations of the audit samples obtained by the analyst must agree within 5 percent of the actual concentration. If the 5 percent specification is not met, reanalyze the compliance and audit samples, and include initial and reanalysis values in the test report.

11.5.4 Failure to meet the 5-percent specification may require retests until the audit problems are resolved. However, if the audit results do not affect the compliance or noncompliance status of the affected facility, the Administrator may waive the reanalysis requirement, further audits, or retests and accept the results of the compliance test. While steps are being taken to resolve audit analysis problems, the Administrator may also choose to use the data to determine the compliance or noncompliance status of the affected facility.

12.0 Data Analysis and Calculations

Carry out the calculations, retaining at least one extra significant figure beyond that of the acquired data. Round off figures after final calculations.

12.1 Nomenclature.

A = Absorbance of sample.

A_1 = Absorbance of the 100-μg NO_2 standard.

A_2 = Absorbance of the 200-μg NO_2 standard.

A_3 = Absorbance of the 300-μg NO_2 standard.
A_4 = Absorbance of the 400-μg NO_2 standard.
C = Concentration of NO_X as NO_2, dry basis, corrected to standard conditions, mg/dsm³ (lb/dscf).
C_d = Determined audit sample concentration, mg/dscm.
C_a = Actual audit sample concentration, mg/dscm.
F = Dilution factor (*i.e.*, 25/5, 25/10, etc., required only if sample dilution was needed to reduce the absorbance into the range of the calibration).
K_c = Spectrophotometer calibration factor.
m = Mass of NO_X as NO_2 in gas sample, μg.
P_f = Final absolute pressure of flask, mm Hg (in. Hg).
P_i = Initial absolute pressure of flask, mm Hg (in. Hg).
P_{std} = Standard absolute pressure, 760 mm Hg (29.92 in. Hg).
RE = Relative error for QA audit samples, percent.
T_f = Final absolute temperature of flask, °K (°R).
T_i = Initial absolute temperature of flask, °K (°R).
T_{std} = Standard absolute temperature, 293 °K (528 °R).
V_{sc} = Sample volume at standard conditions (dry basis), ml.
V_f = Volume of flask and valve, ml.
V_a = Volume of absorbing solution, 25 ml.

12.2 Spectrophotometer Calibration Factor.

$$K_c = 100\frac{A_1 + 2A_2 + 3A_3 + 4A_4}{A_1^2 + A_2^2 + A_3^2 + A_4^2} \qquad \text{Eq. 7-1}$$

12.3 Sample Volume, Dry Basis, Corrected to Standard Conditions.

$$V_{sc} = \left(V_f - V_a\right)\frac{T_{std}}{P_{std}}\left[\frac{P_f}{T_f} - \frac{P_i}{T_i}\right] \qquad \text{Eq. 7-2}$$

$$= K_1\left(V_f - 25\right)\left[\frac{P_f}{T_f} - \frac{P_i}{T_i}\right]$$

Where:

K_1 = 0.3858 °K/mm Hg for metric units,
K_1 = 17.65 °R/in. Hg for English units.

12.4 Total μg NO_2 per sample.

$$m = 2K_cAF \qquad \text{Eq. 7-3}$$

Where:

2 = 50/25, the aliquot factor.

Note: If other than a 25-ml aliquot is used for analysis, the factor 2 must be replaced by a corresponding factor.

12.5 Sample Concentration, Dry Basis, Corrected to Standard Conditions.

$$C = K_2\left(m/V_{sc}\right) \qquad \text{Eq. 7-4}$$

Where:

K2 = 10^3 (mg/m³)/(μg/ml) for metric units,
$K_2 = 6.242 \times 10^{-5}$ (lb/scf)/(μg/ml) for English units.

12.6 Relative Error for QA Audit Samples.

$$RE = 100\left(C_d - C_a\right)/C_a \qquad \text{Eq. 7-5}$$

13.0 Method Performance

13.1 Range. The analytical range of the method has been determined to be 2 to 400 milligrams NO_X (as NO_2) per dry standard cubic meter, without having to dilute the sample.

14.0 Pollution Prevention. [Reserved]

15.0 Waste Management. [Reserved]

16.0 References

1. Standard Methods of Chemical Analysis. 6th ed. New York, D. Van Nostrand Co., Inc. 1962. Vol. 1, pp. 329–330.
2. Standard Method of Test for Oxides of Nitrogen in Gaseous Combustion Products (Phenoldisulfonic Acid Procedure). In: 1968 Book of ASTM Standards, Part 26. Philadelphia, PA. 1968. ASTM Designation D 1608–60, pp. 725–729.
3. Jacob, M.B. The Chemical Analysis of Air Pollutants. New York. Interscience Publishers, Inc. 1960. Vol. 10, pp. 351–356.
4. Beatty, R.L., L.B. Berger, and H.H. Schrenk. Determination of Oxides of Nitrogen by the Phenoldisulfonic Acid Method. Bureau of Mines, U.S. Dept. of Interior. R.I. 3687. February 1943.
5. Hamil, H.F. and D.E. Camann. Collaborative Study of Method for the Determination of Nitrogen Oxide Emissions from Stationary Sources (Fossil Fuel-Fired Steam Generators). Southwest Research Institute Report for Environmental Protection Agency. Research Triangle Park, NC. October 5, 1973.
6. Hamil, H.F. and R.E. Thomas. Collaborative Study of Method for the Determination of Nitrogen Oxide Emissions from Stationary Sources (Nitric Acid Plants). Southwest Research Institute Report for Environmental Protection Agency. Research Triangle Park, NC. May 8, 1974.
7. Stack Sampling Safety Manual (Draft). U.S. Environmental Protection Agency, Office of Air Quality Planning and Standards, Research Triangle Park, NC. September 1978.

BILLING CODE 6560–50–P

17.0 Tables, Diagrams, Flowcharts, and Validation Data

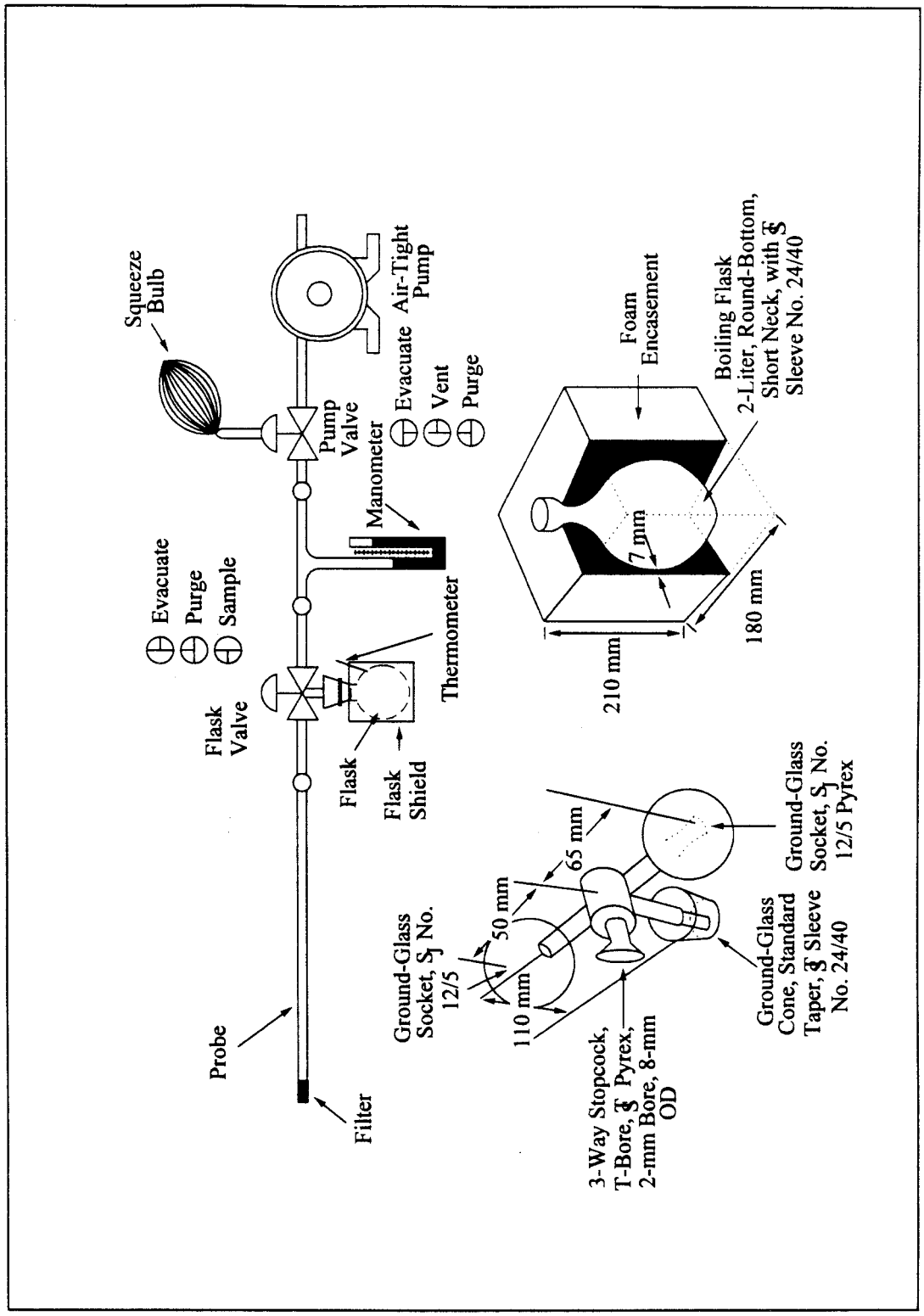

Figure 7-1. Sampling Train, Flask Valve, and Flask.

BILLING CODE 6560–50–C

Method 7A—Determination of Nitrogen Oxide Emissions From Stationary Sources (Ion Chromatographic Method)

Note: This method does not include all of the specifications (*e.g.,* equipment and supplies) and procedures (*e.g.,* sampling and analytical) essential to its performance. Some material is incorporated by reference from other methods in this part. Therefore, to obtain reliable results, persons using this method should have a thorough knowledge of at least the following additional test methods: Method 1, Method 3, Method 5, and Method 7.

1.0 Scope and Application

1.1 Analytes.

Analyte	CAS No.	Sensitivity
Nitrogen oxides (NO_X), as NO_2, including:		
Nitric oxide (NO)	10102–43–9	
Nitrogen dioxide (NO_2)	10102–44–0	65–655 ppmv

1.2 Applicability. This method is applicable for the determination of NO_X emissions from stationary sources.

1.3 Data Quality Objectives. Adherence to the requirements of this method will enhance the quality of the data obtained from air pollutant sampling methods.

2.0 Summary of Method

A grab sample is collected in an evacuated flask containing a dilute sulfuric acid-hydrogen peroxide absorbing solution. The nitrogen oxides, excluding nitrous oxide (N_2O), are oxidized to nitrate and measured by ion chromatography.

3.0 Definitions [Reserved]

4.0 Interferences

Biased results have been observed when sampling under conditions of high sulfur dioxide concentrations (above 2000 ppm).

5.0 Safety

5.1 This method may involve hazardous materials, operations, and equipment. This test method may not address all of the safety problems associated with its use. It is the responsibility of the user of this test method to establish appropriate safety and health practices and to determine the applicability of regulatory limitations prior to performing this test method.

5.2 Corrosive reagents. The following reagents are hazardous. Personal protective equipment and safe procedures are useful in preventing chemical splashes. If contact occurs, immediately flush with copious amounts of water at least 15 minutes. Remove clothing under shower and decontaminate. Treat residual chemical burns as thermal burns.

5.2.1 Hydrogen Peroxide (H_2O_2). Irritating to eyes, skin, nose, and lungs.

5.2.2 Sulfuric Acid (H_2SO_4). Rapidly destructive to body tissue. Will cause third degree burns. Eye damage may result in blindness. Inhalation may be fatal from spasm of the larynx, usually within 30 minutes. May cause lung tissue damage with edema. 3 mg/m^3 will cause lung damage in uninitiated. 1 mg/m^3 for 8 hours will cause lung damage or, in higher concentrations, death. Provide ventilation to limit inhalation. Reacts violently with metals and organics.

6.0 Equipment and Supplies

6.1 Sample Collection. Same as in Method 7, Section 6.1.

6.2 Sample Recovery. Same as in Method 7, Section 6.2, except the stirring rod and pH paper are not needed.

6.3 Analysis. For the analysis, the following equipment and supplies are required. Alternative instrumentation and procedures will be allowed provided the calibration precision requirement in Section 10.1.2 and audit accuracy requirement in Section 11.3 can be met.

6.3.1 Volumetric Pipets. Class A; 1-, 2-, 4-, 5-ml (two for the set of standards and one per sample), 6-, 10-, and graduated 5-ml sizes.

6.3.2 Volumetric Flasks. 50-ml (two per sample and one per standard), 200-ml, and 1-liter sizes.

6.3.3 Analytical Balance. To measure to within 0.1 mg.

6.3.4 Ion Chromatograph. The ion chromatograph should have at least the following components:

6.3.4.1 Columns. An anion separation or other column capable of resolving the nitrate ion from sulfate and other species present and a standard anion suppressor column (optional). Suppressor columns are produced as proprietary items; however, one can be produced in the laboratory using the resin available from BioRad Company, 32nd and Griffin Streets, Richmond, California. Peak resolution can be optimized by varying the eluent strength or column flow rate, or by experimenting with alternative columns that may offer more efficient separation. When using guard columns with the stronger reagent to protect the separation column, the analyst should allow rest periods between injection intervals to purge possible sulfate buildup in the guard column.

6.3.4.2 Pump. Capable of maintaining a steady flow as required by the system.

6.3.4.3 Flow Gauges. Capable of measuring the specified system flow rate.

6.3.4.4 Conductivity Detector.

6.3.4.5 Recorder. Compatible with the output voltage range of the detector.

7.0 Reagents and Standards

Unless otherwise indicated, it is intended that all reagents conform to the specifications established by the Committee on Analytical Reagents of the American Chemical Society, where such specifications are available; otherwise, use the best available grade.

7.1 Sample Collection. Same as Method 7, Section 7.1.

7.2 Sample Recovery. Same as Method 7, Section 7.1.1.

7.3 Analysis. The following reagents and standards are required for analysis:

7.3.1 Water. Same as Method 7, Section 7.1.1.

7.3.2 Stock Standard Solution, 1 mg NO_2/ml. Dry an adequate amount of sodium nitrate ($NaNO_3$) at 105 to 110 °C (221 to 230 °F) for a minimum of 2 hours just before preparing the standard solution. Then dissolve exactly 1.847 g of dried $NaNO_3$ in water, and dilute to l liter in a volumetric flask. Mix well. This solution is stable for 1 month and should not be used beyond this time.

7.3.3 Working Standard Solution, 25 µg/ml. Dilute 5 ml of the standard solution to 200 ml with water in a volumetric flask, and mix well.

7.3.4 Eluent Solution. Weigh 1.018 g of sodium carbonate (Na_2CO_3) and 1.008 g of sodium bicarbonate ($NaHCO_3$), and dissolve in 4 liters of water. This solution is 0.0024 M Na_2CO_3/0.003 M $NaHCO_3$. Other eluents appropriate to the column type and capable of resolving nitrate ion from sulfate and other species present may be used.

7.3.5 Quality Assurance Audit Samples. Same as Method 7, Section 7.3.8.

8.0 Sample Collection, Preservation, Storage, and Transport

8.1 Sampling. Same as in Method 7, Section 8.1.

8.2 Sample Recovery. Same as in Method 7, Section 8.2, except delete the steps on adjusting and checking the pH of the sample. Do not store the samples more than 4 days between collection and analysis.

9.0 Quality Control

Section	Quality control measure	Effect
10.1	Ion chromatograph calibration	Ensure linearity of ion chromatograph response to standards.
11.3	Audit sample analysis	Evaluate analytical technique, preparation of standards.

10.0 Calibration and Standardizations

10.1 Ion Chromatograph.

10.1.1 Determination of Ion Chromatograph Calibration Factor S. Prepare a series of five standards by adding 1.0, 2.0, 4.0, 6.0, and 10.0 ml of working standard solution (25 µg/ml) to a series of five 50-ml volumetric flasks. (The standard masses will equal 25, 50, 100, 150, and 250 µg.) Dilute each flask to the mark with water, and mix well. Analyze with the samples as described in Section 11.2, and subtract the blank from each value. Prepare or calculate a linear regression plot of the standard masses in µg (x-axis) versus their peak height responses in millimeters (y-axis). (Take peak height measurements with symmetrical peaks; in all other cases, calculate peak areas.) From this curve, or equation, determine the slope, and calculate its reciprocal to denote as the calibration factor, S.

10.1.2 Ion Chromatograph Calibration Quality Control. If any point on the calibration curve deviates from the line by more than 7 percent of the concentration at that point, remake and reanalyze that standard. This deviation can be determined by multiplying S times the peak height response for each standard. The resultant concentrations must not differ by more than 7 percent from each known standard mass (*i.e.,* 25, 50, 100, 150, and 250 µg).

10.2 Conductivity Detector. Calibrate according to manufacturer's specifications prior to initial use.

10.3 Barometer. Calibrate against a mercury barometer.

10.4 Temperature Gauge. Calibrate dial thermometers against mercury-in-glass thermometers.

10.5 Vacuum Gauge. Calibrate mechanical gauges, if used, against a mercury manometer such as that specified in Section 6.1.6 of Method 7.

10.6 Analytical Balance. Calibrate against standard weights.

11.0 Analytical Procedures

11.1 Sample Preparation.

11.1.1 Note on the analytical data sheet, the level of the liquid in the container, and whether any sample was lost during shipment. If a noticeable amount of leakage has occurred, either void the sample or use methods, subject to the approval of the Administrator, to correct the final results. Immediately before analysis, transfer the contents of the shipping container to a 50-ml volumetric flask, and rinse the container twice with 5 ml portions of water. Add the rinse water to the flask, and dilute to the mark with water. Mix thoroughly.

11.1.2 Pipet a 5-ml aliquot of the sample into a 50-ml volumetric flask, and dilute to the mark with water. Mix thoroughly. For each set of determinations, prepare a reagent blank by diluting 5 ml of absorbing solution to 50 ml with water. (Alternatively, eluent solution may be used instead of water in all sample, standard, and blank dilutions.)

11.2 Analysis.

11.2.1 Prepare a standard calibration curve according to Section 10.1.1. Analyze the set of standards followed by the set of samples using the same injection volume for both standards and samples. Repeat this analysis sequence followed by a final analysis of the standard set. Average the results. The two sample values must agree within 5 percent of their mean for the analysis to be valid. Perform this duplicate analysis sequence on the same day. Dilute any sample and the blank with equal volumes of water if the concentration exceeds that of the highest standard.

11.2.2 Document each sample chromatogram by listing the following analytical parameters: injection point, injection volume, nitrate and sulfate retention times, flow rate, detector sensitivity setting, and recorder chart speed.

11.3 Audit Sample Analysis. Same as Method 7, Section 11.4.

12.0 Data Analysis and Calculations

Carry out the calculations, retaining at least one extra significant figure beyond that of the acquired data. Round off figures after final calculations.

12.1 Sample Volume. Calculate the sample volume Vsc (in ml), on a dry basis, corrected to standard conditions, using Equation 7–2 of Method 7.

12.2 Sample Concentration of NO_X as NO_2.

12.2.1 Calculate the sample concentration C (in mg/dscm) as follows:

$$C = (H)(S)(F)\left(10^4\right)/V_{sc} \qquad \text{Eq. 7A-1}$$

Where:

H = Sample peak height, mm.

S = Calibration factor, µg/mm.

F = Dilution factor (required only if sample dilution was needed to reduce the concentration into the range of calibration), dimensionless.

10^4 = 1:10 dilution times conversion factor of: (mg/10^3 µg)(10^6 ml/m^3).

12.2.2 If desired, the concentration of NO_2 may be calculated as ppm NO_2 at standard conditions as follows:

$$\text{ppm } NO_2 = 0.5228C \qquad \text{Eq. 7A-2}$$

Where:

0.5228 = ml/mg NO_2.

13.0 Method Performance

13.1 Range. The analytical range of the method is from 125 to 1250 mg NO_X/m^3 as NO_2 (65 to 655 ppmv), and higher concentrations may be analyzed by diluting the sample. The lower detection limit is approximately 19 mg/m^3 (10 ppmv), but may vary among instruments.

14.0 Pollution Prevention. [Reserved]

15.0 Waste Management. [Reserved]

16.0 References

1. Mulik, J.D., and E. Sawicki. Ion Chromatographic Analysis of Environmental Pollutants. Ann Arbor, Ann Arbor Science Publishers, Inc. Vol. 2, 1979.

2. Sawicki, E., J.D. Mulik, and E. Wittgenstein. Ion Chromatographic Analysis of Environmental Pollutants. Ann Arbor, Ann Arbor Science Publishers, Inc. Vol. 1. 1978.

3. Siemer, D.D. Separation of Chloride and Bromide from Complex Matrices Prior to Ion Chromatographic Determination. Anal. Chem. *52*(12):1874–1877. October 1980.

4. Small, H., T.S. Stevens, and W.C. Bauman. Novel Ion Exchange Chromatographic Method Using Conductimetric Determination. Anal. Chem. *47*(11):1801. 1975.

5. Yu, K.K., and P.R. Westlin. Evaluation of Reference Method 7 Flask Reaction Time. Source Evaluation Society Newsletter. *4*(4). November 1979. 10 pp.

6. Stack Sampling Safety Manual (Draft). U.S. Environmental Protection Agency, Office of Air Quality Planning and Standard, Research Triangle Park, NC. September 1978.

17.0 Tables, Diagrams, Flowcharts, and Validation Data. [Reserved]

Method 7B—Determination of Nitrogen Oxide Emissions From Stationary Sources (Ultraviolet Spectrophotometric Method)

Note: This method does not include all of the specifications (*e.g.,* equipment and supplies) and procedures (*e.g.,* sampling and analytical) essential to its performance. Some material is incorporated by reference from other methods in this part. Therefore, to obtain reliable results, persons using this method should have a thorough knowledge of at least the following additional test methods: Method 1, Method 5, and Method 7.

1.0 Scope and Application

1.1 Analytes.

Analyte	CAS No.	Sensitivity
Nitrogen oxides (NO_X), as NO_2, including:		
Nitric oxide (NO)	10102–43–9	
Nitrogen dioxide (NO_2)	10102–44–0	30–786 ppmv

1.2 Applicability. This method is applicable for the determination of NO_X emissions from nitric acid plants.

1.3 Data Quality Objectives. Adherence to the requirements of this method will enhance the quality of the data obtained from air pollutant sampling methods.

2.0 Summary of Method

2.1 A grab sample is collected in an evacuated flask containing a dilute sulfuric acid-hydrogen peroxide absorbing solution; the NO_X, excluding nitrous oxide (N_2O), are measured by ultraviolet spectrophotometry.

3.0 Definition. [Reserved]

4.0 Interferences. [Reserved]

5.0 Safety

5.1 This method may involve hazardous materials, operations, and equipment. This test method may not address all of the safety problems associated with its use. It is the responsibility of the user of this test method to establish appropriate safety and health practices and to determine the applicability of regulatory limitations prior to performing this test method.

5.2 Corrosive reagents. The following reagents are hazardous. Personal protective equipment and safe procedures are useful in preventing chemical splashes. If contact occurs, immediately flush with copious amounts of water at least 15 minutes. Remove clothing under shower and decontaminate. Treat residual chemical burn as thermal burn.

5.2.1 Hydrogen Peroxide (H_2O_2). Irritating to eyes, skin, nose, and lungs.

5.2.2 Sodium Hydroxide (NaOH). Causes severe damage to eyes and skin. Inhalation causes irritation to nose, throat, and lungs. Reacts exothermically with limited amounts of water.

5.2.3 Sulfuric Acid (H_2SO_4). Rapidly destructive to body tissue. Will cause third degree burns. Eye damage may result in blindness. Inhalation may be fatal from spasm of the larynx, usually within 30 minutes. May cause lung tissue damage with edema. 3 mg/m^3 will cause lung damage in uninitiated. 1 mg/m^3 for 8 hours will cause lung damage or, in higher concentrations, death. Provide ventilation to limit inhalation. Reacts violently with metals and organics.

6.0 Equipment and Supplies

6.1 Sample Collection. Same as Method 7, Section 6.1.

6.2 Sample Recovery. The following items are required for sample recovery:

6.2.1 Wash Bottle. Polyethylene or glass.

6.2.2 Volumetric Flasks. 100-ml (one for each sample).

6.3 Analysis. The following items are required for analysis:

6.3.1 Volumetric Pipettes. 5-, 10-, 15-, and 20-ml to make standards and sample dilutions.

6.3.2 Volumetric Flasks. 1000- and 100-ml for preparing standards and dilution of samples.

6.3.3 Spectrophotometer. To measure ultraviolet absorbance at 210 nm.

6.3.4 Analytical Balance. To measure to within 0.1 mg.

7.0 Reagents and Standards

Note: Unless otherwise indicated, all reagents are to conform to the specifications established by the Committee on Analytical Reagents of the American Chemical Society, where such specifications are available. Otherwise, use the best available grade.

7.1 Sample Collection. Same as Method 7, Section 7.1. It is important that the amount of hydrogen peroxide in the absorbing solution not be increased. Higher concentrations of peroxide may interfere with sample analysis.

7.2 Sample Recovery. Same as Method 7, Section 7.2.

7.3 Analysis. Same as Method 7, Sections 7.3.1, 7.3.3, and 7.3.4, with the addition of the following:

7.3.1 Working Standard KNO_3 Solution. Dilute 10 ml of the standard solution to 1000 ml with water. One milliliter of the working standard is equivalent to 10 µg NO_2.

8.0 Sample Collection, Preservation, Storage, and Transport

8.1 Sample Collection. Same as Method 7, Section 8.1.

8.2 Sample Recovery.

8.2.1 Let the flask sit for a minimum of 16 hours, and then shake the contents for 2 minutes.

8.2.2 Connect the flask to a mercury filled U-tube manometer. Open the valve from the flask to the manometer, and record the flask temperature (T_f), the barometric pressure, and the difference between the mercury levels in the manometer. The absolute internal pressure in the flask (P_f) is the barometric pressure less the manometer reading.

8.2.3 Transfer the contents of the flask to a leak-free wash bottle. Rinse the flask three times with 10-ml portions of water, and add to the bottle. Mark the height of the liquid level so that the container can be checked for leakage after transport. Label the container to identify clearly its contents. Seal the container for shipping.

9.0 Quality Control

Section	Quality control measure	Effect
10.1	Spectrophometer calibration	Ensures linearity of spectrophotometer response to standards.
11.4	Audit sample analysis	Evaluates analytical technique and preparation of standards.

10.0 Calibration and Standardizations

Same as Method 7, Sections 10.2 through 10.5, with the addition of the following:

10.1 Determination of Spectrophotometer Standard Curve. Add 0 ml, 5 ml, 10 ml, 15 ml, and 20 ml of the KNO_3 working standard solution (1 ml = 10 µg NO_2) to a series of five 100-ml volumetric flasks. To each flask, add 5 ml of absorbing solution. Dilute to the mark with water. The resulting solutions contain 0.0, 50, 100, 150, and 200 µg NO_2, respectively. Measure the absorbance by ultraviolet spectrophotometry at 210 nm, using the blank as a zero reference. Prepare a standard curve plotting absorbance vs. µg NO_2.

Note: If other than a 20-ml aliquot of sample is used for analysis, then the amount of absorbing solution in the blank and standards must be adjusted such that the same amount of absorbing solution is in the blank and standards as is in the aliquot of sample used.

10.1.1 Calculate the spectrophotometer calibration factor as follows:

$$K_c = \frac{\sum_{i=1}^{n} M_i A_i}{\sum_{i=1}^{n} A_i^2} \qquad \text{Eq. 7B-1}$$

Where:

Mi = Mass of NO_2 in standard i, µg.

Ai = Absorbance of NO_2 standard i.

n = Total number of calibration standards.

10.1.2 For the set of calibration standards specified here, Equation 7B–1 simplifies to the following:

$$K_c = 50 \frac{A_1 + 2A_2 + 3A_3 + 4A_4}{A_1^2 + A_2^2 + A_3^2 + A_4^2} \qquad \text{Eq. 7B-2}$$

10.2 Spectrophotometer Calibration Quality Control. Multiply the absorbance value obtained for each standard by the K_c factor (reciprocal of the least squares slope) to determine the distance each calibration point lies from the theoretical calibration line. The difference between the calculated concentration values and the actual concentrations (*i.e.,* 50, 100, 150, and 200 µg NO_2) should be less than 7 percent for all standards.

11.0 Analytical Procedures

11.1 Sample Loss Check. Note the level of the liquid in the container, and confirm whether any sample was lost during shipment. Note this on the analytical data sheet. If a noticeable amount of leakage has occurred, either void the sample or use methods, subject to the approval of the Administrator, to correct the final results.

11.2 Sample Preparation. Immediately prior to analysis, transfer the contents of the shipping container to a 100-ml volumetric flask, and rinse the container twice with 5-ml portions of water. Add the rinse water to the flask, and dilute to mark with water.

11.3 Sample Analysis. Mix the contents of the flask thoroughly and pipette a 20 ml-aliquot of sample into a 100-ml volumetric flask. Dilute to the mark with water. Using the blank as zero reference, read the absorbance of the sample at 210 nm.

11.4 Audit Sample Analysis. Same as Method 7, Section 11.4, except that a set of audit samples must be analyzed with each set of compliance samples or once per analysis day, or once per week when averaging continuous samples.

12.0 Data Analysis and Calculations

Same as Method 7, Section 12.0, except replace Section 12.3 with the following:

12.1 Total µg NO_2 Per Sample.

$$m = 5\, K_c\, A\, F \qquad \text{Eq. 7B-3}$$

Where:

5 = 100/20, the aliquot factor.

Note: If other than a 20-ml aliquot is used for analysis, the factor 5 must be replaced by a corresponding factor.

13.0 Method Performance

13.1 Range. The analytical range of the method as outlined has been determined to be 57 to 1500 milligrams NO_X (as NO_2) per dry standard cubic meter, or 30 to 786 parts per million by volume (ppmv) NO_X.

14.0 Pollution Prevention. [Reserved]

15.0 Waste Management. [Reserved]

16.0 References

1. National Institute for Occupational Safety and Health. Recommendations for Occupational Exposure to Nitric Acid. In: Occupational Safety and Health Reporter. Washington, D.C. Bureau of National Affairs, Inc. 1976. p. 149.

2. Rennie, P.J., A.M. Sumner, and F.B. Basketter. Determination of Nitrate in Raw, Potable, and Waste Waters by Ultraviolet Spectrophotometry. Analyst. *104*:837. September 1979.

17.0 Tables, Diagrams, Flowcharts, and Validation Data. [Reserved]

Method 7C—Determination of Nitrogen Oxide Emissions From Stationary Sources (Alkaline Permanganate/Colorimetric Method)

Note: This method does not include all of the specifications (*e.g.*, equipment and supplies) and procedures (*e.g.*, sampling and analytical) essential to its performance. Some material is incorporated by reference from other methods in this part. Therefore, to obtain reliable results, persons using this method should have a thorough knowledge of at least the following additional test methods: Method 1, Method 3, Method 6 and Method 7.

1.0 Scope and Application

1.1 Analytes.

Analyte	CAS no.	Sensitivity
Nitrogen oxides (NO_X), as NO_2, including:		
Nitric oxide (NO)	10102–43–9	
Nitrogen dioxide (NO_2)	10102–44–07	ppmv

1.2 Applicability. This method applies to the measurement of NO_X emissions from fossil-fuel fired steam generators, electric utility plants, nitric acid plants, or other sources as specified in the regulations.

1.3 Data Quality Objectives. Adherence to the requirements of this method will enhance the quality of the data obtained from air pollutant sampling methods.

2.0 Summary of Method

An integrated gas sample is extracted from the stack and passed through impingers containing an alkaline potassium permanganate solution; NO_X ($NO + NO_2$) emissions are oxidized to NO_2 and NO_3. Then NO_3^- is reduced to NO_2^- with cadmium, and the NO_2^- is analyzed colorimetrically.

3.0 Definitions. [Reserved]

4.0 Interferences

Possible interferents are sulfur dioxides (SO_2) and ammonia (NH_3).

4.1 High concentrations of SO_2 could interfere because SO_2 consumes MnO_4 (as does NO_X) and, therefore, could reduce the NO_X collection efficiency. However, when sampling emissions from a coal-fired electric utility plant burning 2.1 percent sulfur coal with no control of SO_2 emissions, collection efficiency was not reduced. In fact, calculations show that sampling 3000 ppm SO_2 will reduce the MnO_4 concentration by only 5 percent if all the SO_2 is consumed in the first impinger.

4.2 Ammonia (NH_3) is slowly oxidized to NO_3^- by the absorbing solution. At 100 ppm NH_3 in the gas stream, an interference of 6 ppm NO_X (11 mg NO_2/m^3) was observed when the sample was analyzed 10 days after collection. Therefore, the method may not be applicable to plants using NH_3 injection to control NO_X emissions unless means are taken to correct the results. An equation has been developed to allow quantification of the interference and is discussed in Reference 5 of Section 16.0.

5.0 Safety

5.1 Disclaimer. This method may involve hazardous materials, operations, and equipment. This test method may not address all of the safety problems associated with its use. It is the responsibility of the user of this test method to establish appropriate safety and health practices and to determine the applicability of regulatory limitations prior to performing this test method.

5.2 Corrosive Reagents. The following reagents are hazardous. Personal protective equipment and safe procedures are useful in preventing chemical splashes. If contact occurs, immediately flush with copious amounts of water for at least 15 minutes. Remove clothing under shower and decontaminate. Treat residual chemical burns as thermal burns.

5.2.1 Hydrochloric Acid (HCl). Highly toxic and corrosive. Causes severe damage to skin. Vapors are highly irritating to eyes, skin, nose, and lungs, causing severe damage. May cause bronchitis, pneumonia, or edema of lungs. Exposure to vapor concentrations of 0.13 to 0.2 percent can be lethal in minutes. Will react with metals, producing hydrogen.

5.2.2 Oxalic Acid $(COOH)_2$. Poisonous. Irritating to eyes, skin, nose, and throat.

5.2.3 Sodium Hydroxide (NaOH). Causes severe damage to eye tissues and to skin. Inhalation causes irritation to nose, throat, and lungs. Reacts exothermically with small amounts of water.

5.2.4 Potassium Permanganate ($KMnO_4$). Caustic, strong oxidizer. Avoid bodily contact with.

6.0 Equipment and Supplies

6.1 Sample Collection and Sample Recovery. A schematic of the Method 7C sampling train is shown in Figure 7C–1, and component parts are discussed below. Alternative apparatus and procedures are allowed provided acceptable accuracy and precision can be demonstrated to the satisfaction of the Administrator.

6.1.1 Probe. Borosilicate glass tubing, sufficiently heated to prevent water condensation and equipped with an in-stack or heated out-of-stack filter to remove particulate matter (a plug of glass wool is satisfactory for this purpose). Stainless steel or Teflon tubing may also be used for the probe.

6.1.2 Impingers. Three restricted-orifice glass impingers, having the specifications given in Figure 7C–2, are required for each sampling train. The impingers must be connected in series with leak-free glass connectors. Stopcock grease may be used, if necessary, to prevent leakage. (The impingers can be fabricated by a glass blower if not available commercially.)

6.1.3 Glass Wool, Stopcock Grease, Drying Tube, Valve, Pump, Barometer, and Vacuum Gauge and Rotameter. Same as in Method 6, Sections 6.1.1.3, 6.1.1.4, 6.1.1.6, 6.1.1.7, 6.1.1.8, 6.1.2, and 6.1.3, respectively.

6.1.4 Rate Meter. Rotameter, or equivalent, accurate to within 2 percent at the selected flow rate of between 400 and 500 ml/min (0.014 to 0.018 cfm). For rotameters, a range of 0 to 1 liter/min (0 to 0.035 cfm) is recommended.

6.1.5 Volume Meter. Dry gas meter (DGM) capable of measuring the sample volume under the sampling conditions of 400 to 500 ml/min (0.014 to 0.018 cfm) for 60 minutes within an accuracy of 2 percent.

6.1.6 Filter. To remove NO_X from ambient air, prepared by adding 20 g of 5-angstrom molecular sieve to a cylindrical tube (*e.g.*, a polyethylene drying tube).

6.1.7 Polyethylene Bottles. 1-liter, for sample recovery.

6.1.8 Funnel and Stirring Rods. For sample recovery.

6.2 Sample Preparation and Analysis.

6.2.1 Hot Plate. Stirring type with 50- by 10-mm Teflon-coated stirring bars.

6.2.2 Beakers. 400-, 600-, and 1000-ml capacities.

6.2.3 Filtering Flask. 500-ml capacity with side arm.

6.2.4 Buchner Funnel. 75-mm ID, with spout equipped with a 13-mm ID by 90-mm long piece of Teflon tubing to minimize possibility of aspirating sample solution during filtration.

6.2.5 Filter Paper. Whatman GF/C, 7.0-cm diameter.

6.2.6 Stirring Rods.

6.2.7 Volumetric Flasks. 100-, 200- or 250-, 500-, and 1000-ml capacity.

6.2.8 Watch Glasses. To cover 600- and 1000-ml beakers.

6.2.9 Graduated Cylinders. 50- and 250-ml capacities.

6.2.10 Pipettes. Class A.

6.2.11 pH Meter. To measure pH from 0.5 to 12.0.

6.2.12 Burette. 50-ml with a micrometer type stopcock. (The stopcock is Catalog No. 8225–t–05, Ace Glass, Inc., Post Office Box 996, Louisville, Kentucky 50201.) Place a glass wool plug in bottom of burette. Cut off burette at a height of 43 cm (17 in.)

from the top of plug, and have a blower attach a glass funnel to top of burette such that the diameter of the burette remains essentially unchanged. Other means of attaching the funnel are acceptable.

6.2.13 Glass Funnel. 75-mm ID at the top.

6.2.14 Spectrophotometer. Capable of measuring absorbance at 540 nm; 1-cm cells are adequate.

6.2.15 Metal Thermometers. Bimetallic thermometers, range 0 to 150 °C (32 to 300 °F).

6.2.16 Culture Tubes. 20-by 150-mm, Kimax No. 45048.

6.2.17 Parafilm ''M.'' Obtained from American Can Company, Greenwich, Connecticut 06830.

6.2.18 CO_2 Measurement Equipment. Same as in Method 3, Section 6.0.

7.0 Reagents and Standards

Unless otherwise indicated, it is intended that all reagents conform to the specifications established by the Committee on Analytical Reagents of the American Chemical Society, where such specifications are available; otherwise, use the best available grade.

7.1 Sample Collection.

7.1.1 Water. Deionized distilled to conform to ASTM Specification D 1193–77 or 91 Type 3 (incorporated by reference—see § 60.17).

7.1.2 Potassium Permanganate, 4.0 Percent (w/w), Sodium Hydroxide, 2.0 Percent (w/w) solution ($KMnO_4$/NaOH solution). Dissolve 40.0 g of $KMnO_4$ and 20.0 g of NaOH in 940 ml of water.

7.2 Sample Preparation and Analysis.

7.2.1 Water. Same as in Section 7.1.1.

7.2.2 Oxalic Acid Solution. Dissolve 48 g of oxalic acid [$(COOH)_2 \cdot 2H_2O$] in water, and dilute to 500 ml. Do not heat the solution.

7.2.3 Sodium Hydroxide, 0.5 N. Dissolve 20 g of NaOH in water, and dilute to 1 liter.

7.2.4 Sodium Hydroxide, 10 N. Dissolve 40 g of NaOH in water, and dilute to 100 ml.

7.2.5 Ethylenediamine Tetraacetic Acid (EDTA) Solution, 6.5 percent (w/v). Dissolve 6.5 g of EDTA (disodium salt) in water, and dilute to 100 ml. Dissolution is best accomplished by using a magnetic stirrer.

7.2.6 Column Rinse Solution. Add 20 ml of 6.5 percent EDTA solution to 960 ml of water, and adjust the pH to between 11.7 and 12.0 with 0.5 N NaOH.

7.2.7 Hydrochloric Acid (HCl), 2 N. Add 86 ml of concentrated HCl to a 500 ml-volumetric flask containing water, dilute to volume, and mix well. Store in a glass-stoppered bottle.

7.2.8 Sulfanilamide Solution. Add 20 g of sulfanilamide (melting point 165 to 167 °C (329 to 333 °F)) to 700 ml of water. Add, with mixing, 50 ml concentrated phosphoric acid (85 percent), and dilute to 1000 ml. This solution is stable for at least 1 month, if refrigerated.

7.2.9 N-(1-Naphthyl)-Ethylenediamine Dihydrochloride (NEDA) Solution. Dissolve 0.5 g of NEDA in 500 ml of water. An aqueous solution should have one absorption peak at 320 nm over the range of 260 to 400 nm. NEDA that shows more than one absorption peak over this range is impure and should not be used. This solution is stable for at least 1 month if protected from light and refrigerated.

7.2.10 Cadmium. Obtained from Matheson Coleman and Bell, 2909 Highland Avenue, Norwood, Ohio 45212, as EM Laboratories Catalog No. 2001. Prepare by rinsing in 2 N HCl for 5 minutes until the color is silver-grey. Then rinse the cadmium with water until the rinsings are neutral when tested with pH paper. CAUTION: H_2 is liberated during preparation. Prepare in an exhaust hood away from any flame or combustion source.

7.2.11 Sodium Sulfite ($NaNO_2$) Standard Solution, Nominal Concentration, 1000 μg NO_2^-/ml. Desiccate NaNO2 overnight. Accurately weigh 1.4 to 1.6 g of $NaNO_2$ (assay of 97 percent $NaNO_2$ or greater), dissolve in water, and dilute to 1 liter. Calculate the exact NO_2-concentration using Equation 7C–1 in Section 12.2. This solution is stable for at least 6 months under laboratory conditions.

7.2.12 Potassium Nitrate (KNO_3) Standard Solution. Dry KNO_3 at 110 °C (230 °F) for 2 hours, and cool in a desiccator. Accurately weigh 9 to 10 g of KNO_3 to within 0.1 mg, dissolve in water, and dilute to 1 liter. Calculate the exact NO_3^- concentration using Equation 7C–2 in Section 12.3. This solution is stable for 2 months without preservative under laboratory conditions.

7.2.13 Spiking Solution. Pipette 7 ml of the KNO_3 standard into a 100-ml volumetric flask, and dilute to volume.

7.2.14 Blank Solution. Dissolve 2.4 g of $KMnO_4$ and 1.2 g of NaOH in 96 ml of water. Alternatively, dilute 60 ml of $KMnO_4$/NaOH solution to 100 ml.

7.2.15 Quality Assurance Audit Samples. Same as in Method 7, Section 7.3.10. When requesting audit samples, specify that they be in the appropriate concentration range for Method 7C.

8.0 Sample Collection, Preservation, Storage, and Transport

8.1 Preparation of Sampling Train. Add 200 ml of $KMnO_4$/NaOH solution (Section 7.1.2) to each of three impingers, and assemble the train as shown in Figure 7C–1. Adjust the probe heater to a temperature sufficient to prevent water condensation.

8.2 Leak-Checks. Same as in Method 6, Section 8.2.

8.3 Sample Collection.

8.3.1 Record the initial DGM reading and barometric pressure. Determine the sampling point or points according to the appropriate regulations (*e.g.*, § 60.46(b)(5) of 40 CFR Part 60). Position the tip of the probe at the sampling point, connect the probe to the first impinger, and start the pump. Adjust the sample flow to a value between 400 and 500 ml/min (0.014 and 0.018 cfm). CAUTION: DO NOT EXCEED THESE FLOW RATES. Once adjusted, maintain a constant flow rate during the entire sampling run. Sample for 60 minutes. For relative accuracy (RA) testing of continuous emission monitors, the minimum sampling time is 1 hour, sampling 20 minutes at each traverse point.

Note: When the SO_2 concentration is greater than 1200 ppm, the sampling time may have to be reduced to 30 minutes to eliminate plugging of the impinger orifice with MnO_2. For RA tests with SO_2 greater than 1200 ppm, sample for 30 minutes (10 minutes at each point).

8.3.2 Record the DGM temperature, and check the flow rate at least every 5 minutes. At the conclusion of each run, turn off the pump, remove the probe from the stack, and record the final readings. Divide the sample volume by the sampling time to determine the average flow rate. Conduct the mandatory post-test leak-check. If a leak is found, void the test run, or use procedures acceptable to the Administrator to adjust the sample volume for the leakage.

8.4 CO_2 Measurement. During sampling, measure the CO_2 content of the stack gas near the sampling point using Method 3. The single-point grab sampling procedure is adequate, provided the measurements are made at least three times (near the start, midway, and before the end of a run), and the average CO_2 concentration is computed. The Orsat or Fyrite analyzer may be used for this analysis.

8.5 Sample Recovery. Disconnect the impingers. Pour the contents of the impingers into a 1-liter polyethylene bottle using a funnel and a stirring rod (or other means) to prevent spillage. Complete the quantitative transfer by

rinsing the impingers and connecting tubes with water until the rinsings are clear to light pink, and add the rinsings to the bottle. Mix the sample, and mark the solution level. Seal and identify the sample container.

9.0 Quality Control

Section	Quality control measure	Effect
8.2, 10.1–10.3	Sampling equipment leak-check and calibration.	Ensure accurate measurement of sample volume.
10.4	Spectrophotometer calibration	Ensure linearity of spectrophotometer response to standards.
11.3	Spiked sample analysis	Ensure reduction efficiency of column.
11.6	Audit sample analysis	Evaluate analytical technique, preparation of standards.

10.0 Calibration and Standardizations

10.1 Volume Metering System. Same as Method 6, Section 10.1. For detailed instructions on carrying out these calibrations, it is suggested that Section 3.5.2 of Reference 4 of Section 16.0 be consulted.

10.2 Temperature Sensors and Barometer. Same as in Method 6, Sections 10.2 and 10.4, respectively.

10.3 Check of Rate Meter Calibration Accuracy (Optional). Disconnect the probe from the first impinger, and connect the filter. Start the pump, and adjust the rate meter to read between 400 and 500 ml/min (0.014 and 0.018 cfm). After the flow rate has stabilized, start measuring the volume sampled, as recorded by the dry gas meter and the sampling time. Collect enough volume to measure accurately the flow rate. Then calculate the flow rate. This average flow rate must be less than 500 ml/min (0.018 cfm) for the sample to be valid; therefore, it is recommended that the flow rate be checked as above prior to each test.

10.4 Spectrophotometer.

10.4.1 Dilute 5.0 ml of the $NaNO_2$ standard solution to 200 ml with water. This solution nominally contains 25 µg NO_2^-/ml. Use this solution to prepare calibration standards to cover the range of 0.25 to 3.00 µg NO_2^-/ml. Prepare a minimum of three standards each for the linear and slightly nonlinear (described below) range of the curve. Use pipettes for all additions.

10.4.2 Measure the absorbance of the standards and a water blank as instructed in Section 11.5. Plot the net absorbance vs. µg NO_2^-/ml. Draw a smooth curve through the points. The curve should be linear up to an absorbance of approximately 1.2 with a slope of approximately 0.53 absorbance units/µg NO_2^-/ml. The curve should pass through the origin. The curve is slightly nonlinear from an absorbance of 1.2 to 1.6.

11.0 Analytical Procedures

11.1 Sample Stability. Collected samples are stable for at least four weeks; thus, analysis must occur within 4 weeks of collection.

11.2 Sample Preparation.

11.2.1 Prepare a cadmium reduction column as follows: Fill the burette with water. Add freshly prepared cadmium slowly, with tapping, until no further settling occurs. The height of the cadmium column should be 39 cm (15 in). When not in use, store the column under rinse solution.

Note: The column should not contain any bands of cadmium fines. This may occur if regenerated cadmium is used and will greatly reduce the column lifetime.

11.2.2 Note the level of liquid in the sample container, and determine whether any sample was lost during shipment. If a noticeable amount of leakage has occurred, the volume lost can be determined from the difference between initial and final solution levels, and this value can then be used to correct the analytical result. Quantitatively transfer the contents to a 1-liter volumetric flask, and dilute to volume.

11.2.3 Take a 100-ml aliquot of the sample and blank (unexposed $KMnO_4$/NaOH) solutions, and transfer to 400-ml beakers containing magnetic stirring bars. Using a pH meter, add concentrated H_2SO_4 with stirring until a pH of 0.7 is obtained. Allow the solutions to stand for 15 minutes. Cover the beakers with watch glasses, and bring the temperature of the solutions to 50 °C (122 °F). Keep the temperature below 60 °C (140 °F). Dissolve 4.8 g of oxalic acid in a minimum volume of water, approximately 50 ml, at room temperature. Do not heat the solution. Add this solution slowly, in increments, until the $KMnO_4$ solution becomes colorless. If the color is not completely removed, prepare some more of the above oxalic acid solution, and add until a colorless solution is obtained. Add an excess of oxalic acid by dissolving 1.6 g of oxalic acid in 50 ml of water, and add 6 ml of this solution to the colorless solution. If suspended matter is present, add concentrated H_2SO_4 until a clear solution is obtained.

11.2.4 Allow the samples to cool to near room temperature, being sure that the samples are still clear. Adjust the pH to between 11.7 and 12.0 with 10 N NaOH. Quantitatively transfer the mixture to a Buchner funnel containing GF/C filter paper, and filter the precipitate. Filter the mixture into a 500-ml filtering flask. Wash the solid material four times with water. When filtration is complete, wash the Teflon tubing, quantitatively transfer the filtrate to a 500-ml volumetric flask, and dilute to volume. The samples are now ready for cadmium reduction. Pipette a 50-ml aliquot of the sample into a 150-ml beaker, and add a magnetic stirring bar. Pipette in 1.0 ml of 6.5 percent EDTA solution, and mix.

11.3 Determine the correct stopcock setting to establish a flow rate of 7 to 9 ml/min of column rinse solution through the cadmium reduction column. Use a 50-ml graduated cylinder to collect and measure the solution volume. After the last of the rinse solution has passed from the funnel into the burette, but before air entrapment can occur, start adding the sample, and collect it in a 250-ml graduated cylinder. Complete the quantitative transfer of the sample to the column as the sample passes through the column. After the last of the sample has passed from the funnel into the burette, start adding 60 ml of column rinse solution, and collect the rinse solution until the solution just disappears from the funnel. Quantitatively transfer the sample to a 200-ml volumetric flask (a 250-ml flask may be required), and dilute to volume. The samples are now ready for NO_2^- analysis.

Note: Two spiked samples should be run with every group of samples passed through the column. To do this, prepare two additional 50-ml aliquots of the sample suspected to have the highest NO_2^- concentration, and add 1 ml of the spiking solution to these aliquots. If the spike recovery or column efficiency (see Section 12.2) is below 95 percent, prepare a new column, and repeat the cadmium reduction.

11.4 Repeat the procedures outlined in Sections 11.2 and 11.3 for each sample and each blank.

11.5 Sample Analysis. Pipette 10 ml of sample into a culture tube. Pipette in 10 ml of sulfanilamide solution and 1.4 ml of NEDA solution. Cover the culture tube with parafilm, and mix the solution. Prepare a blank in the same manner using the sample from treatment of the unexposed $KMnO_4$/NaOH solution. Also, prepare a calibration standard to check the slope of the calibration curve. After a 10-minute color development interval, measure the absorbance at 540 nm against water. Read µg NO_2^-/ml from the calibration curve. If the absorbance is greater than that of the highest calibration standard, use less than 10 ml of sample, and repeat the analysis. Determine the NO_2^- concentration using the calibration curve obtained in Section 10.4.

Note: Some test tubes give a high blank NO_2^- value but culture tubes do not.

11.6 Audit Sample Analysis. Same as in Method 7, Section 11.4.

12.0 Data Analysis and Calculations

Carry out calculations, retaining at least one extra significant figure beyond that of the acquired data. Round off figures after final calculation.

12.1 Nomenclature.

B = Analysis of blank, µg NO_2^-/ml.
C = Concentration of NO_X as NO_2, dry basis, mg/dsm^3.
E = Column efficiency, dimensionless
$K_2 = 10^{-3}$ mg/µg.
m = Mass of NO_X, as NO_2, in sample, µg.
P_{bar} = Barometric pressure, mm Hg (in. Hg).
P_{std} = Standard absolute pressure, 760 mm Hg (29.92 in. Hg).
s = Concentration of spiking solution, µg NO_3/ml.
S = Analysis of sample, µg NO_2^-/ml.
T_m = Average dry gas meter absolute temperature, °K.
T_{std} = Standard absolute temperature, 293 °K (528 °R).
$V_{m(std)}$ = Dry gas volume measured by the dry gas meter, corrected to standard conditions, dscm (dscf).
V_m = Dry gas volume as measured by the dry gas meter, scm (scf).
x = Analysis of spiked sample, µg NO_2^-/ml.
X = Correction factor for CO_2 collection = 100/(100 − %CO_2(V/V)).
y = Analysis of unspiked sample, µg NO_2^-/ml.
Y = Dry gas meter calibration factor.
1.0 ppm NO = 1.247 mg NO/m^3 at STP.
1.0 ppm NO_2 = 1.912 mg NO_2/m^3 at STP.
1 ft^3 = 2.832×10^{-2} m^3.

12.2 NO_2 Concentration. Calculate the NO_2 concentration of the solution (see Section 7.2.11) using the following equation:

$$\frac{\mu g\ NO_2^-}{ml} = g\ NaNO_2 \times \frac{\text{purity, \%}}{100} \times 10^3 \times \frac{46.01}{69.01} \qquad \text{Eq. 7C-1}$$

12.3 NO_3 Concentration. Calculate the NO_3 concentration of the KNO_3 solution (see Section 7.2.12) using the following equation:

$$\frac{\mu g\ NO_3^-}{ml} = g\ KNO_3 \times \left(10^3\right) \times \frac{62.01}{101.10} \qquad \text{Eq. 7C-2}$$

12.4 Sample Volume, Dry Basis, Corrected to Standard Conditions.

$$V_{m(std)} = V_m\ X\ Y \frac{T_{std}}{T_m} \frac{P_{bar}}{P_{std}} \qquad \text{Eq. 7C-3}$$

$$= K_1\ X\ Y\ V_m \frac{P_{bar}}{T_m}$$

Where:
K_1 = 0.3855 °K/mm Hg for metric units.
K_1 = 17.65 °R/in. Hg for English units.

12.5 Efficiency of Cadmium Reduction Column. Calculate this value as follows:

$$E = \frac{200\ (x - y)}{1.0\ s\ \frac{46.01}{62.01}} = \frac{269.6\ (x - y)}{s} \qquad \text{Eq. 7C-4}$$

Where:
200 = Final volume of sample and blank after passing through the column, ml.
1.0 = Volume of spiking solution added, ml.
46.01 = µg NO_2^-/µmole.
62.01 = µg NO_3^-/µmole.

12.6 Total µg NO_2.

$$m = 200 \left(\frac{500}{50}\right)\left(\frac{1000}{100}\right)\left(\frac{(S - B)}{E}\right) = \frac{(2 \times 10^4)(S - B)}{E} \qquad \text{Eq. 7C-5}$$

Where:
500 = Total volume of prepared sample, ml.
50 = Aliquot of prepared sample processed through cadmium column, ml.
100 = Aliquot of $KMnO_4$/NaOH solution, ml.

1000 = Total volume of $KMnO_4$/NaOH solution, ml.

12.7 Sample Concentration.

$$C = K_2 \frac{m}{V_{m(std)}} \qquad \text{Eq. 7C-6}$$

13.0 Method Performance

13.1 Precision. The intra-laboratory relative standard deviation for a single measurement is 2.8 and 2.9 percent at 201 and 268 ppm NO_X, respectively.

13.2 Bias. The method does not exhibit any bias relative to Method 7.

13.3 Range. The lower detectable limit is 13 mg NO_X/m^3, as NO_2 (7 ppm NO_X) when sampling at 500 ml/min for 1 hour. No upper limit has been established; however, when using the recommended sampling conditions, the method has been found to collect NO_X emissions quantitatively up to 1782 mg NO_X/m^3, as NO_2 (932 ppm NO_X).

14.0 Pollution Prevention. [Reserved]

15.0 Waste Management. [Reserved]

16.0 References

1. Margeson, J.H., W.J. Mitchell, J.C. Suggs, and M.R. Midgett. Integrated Sampling and Analysis Methods for Determining NO_X Emissions at Electric Utility Plants. U.S. Environmental Protection Agency, Research Triangle Park, NC. Journal of the Air Pollution Control Association. *32*:1210–1215. 1982.

2. Memorandum and attachment from J.H. Margeson, Source Branch, Quality Assurance Division, Environmental Monitoring Systems Laboratory, to The Record, EPA. March 30, 1983. NH_3 Interference in Methods 7C and 7D.

3. Margeson, J.H., J.C. Suggs, and M.R. Midgett. Reduction of Nitrate to Nitrite with Cadmium. Anal. Chem. *52*:1955–57. 1980.

4. Quality Assurance Handbook for Air Pollution Measurement Systems. Volume III—Stationary Source Specific Methods. U.S. Environmental Protection Agency. Research Triangle Park, NC. Publication No. EPA–600/4–77–027b. August 1977.

5. Margeson, J.H., *et al.* An Integrated Method for Determining NO_X Emissions at Nitric Acid Plants. Analytical Chemistry. *47* (11):1801. 1975.

BILLING CODE 6560–50–P

17.0 Tables, Diagrams, Flowcharts, and Validation Data

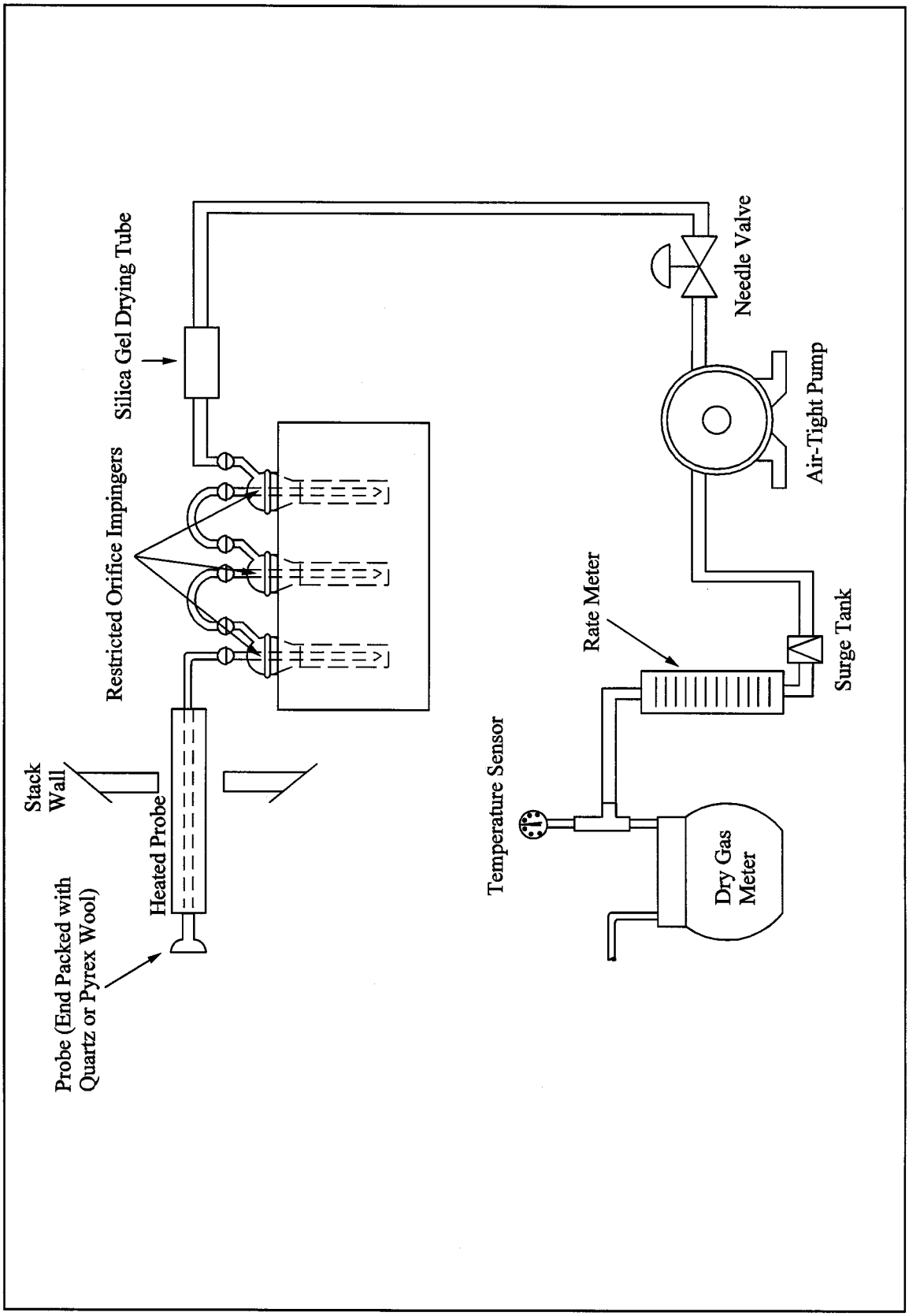

Figure 7C-1. NO_x Sampling Train.

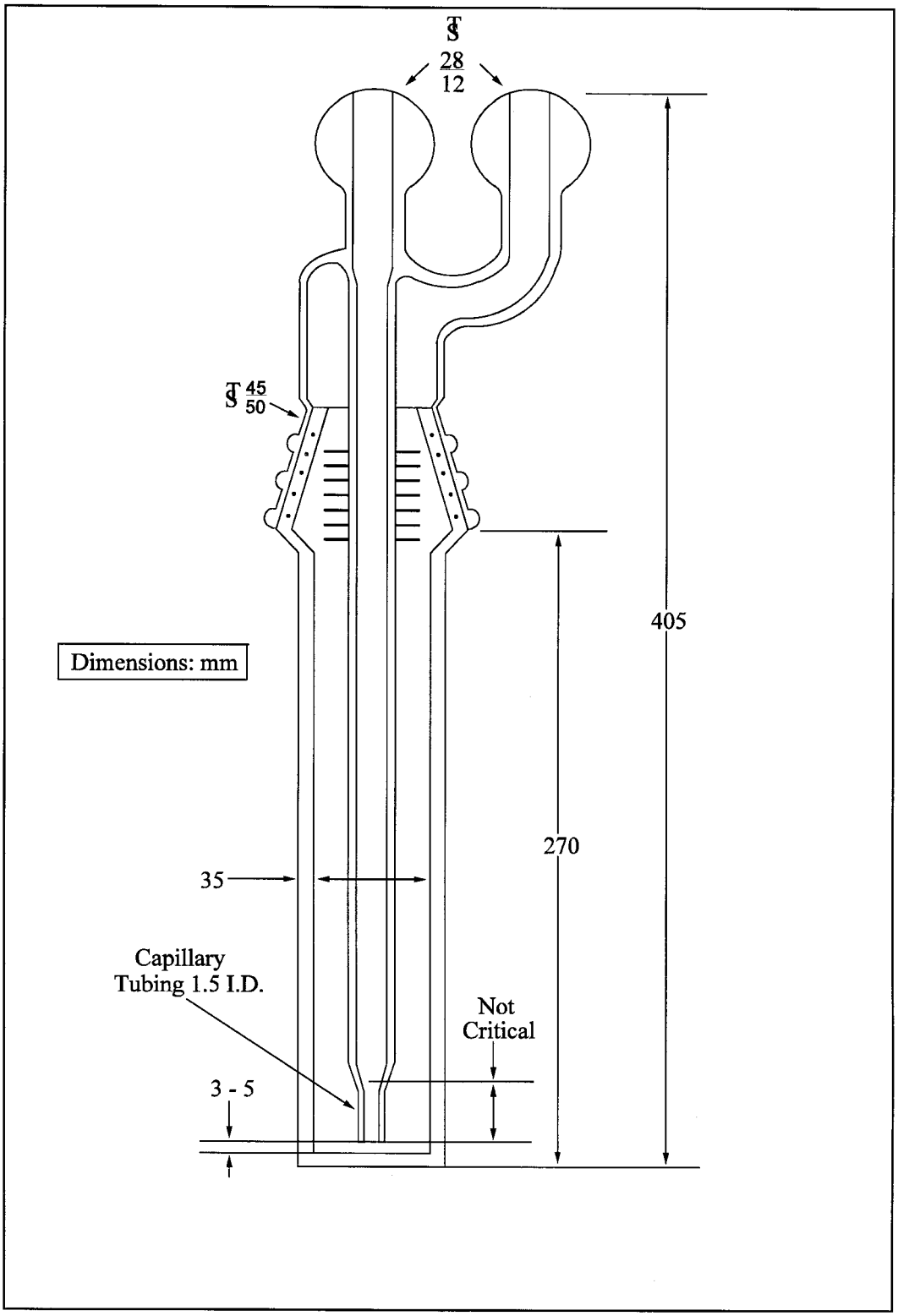

Figure 7C-2. Restricted-Orifice Impinger.

BILLING CODE 6560–50–C

Method 7D—Determination of Nitrogen Oxide Emissions From Stationary Sources (Alkaline-Permanganate/Ion Chromatographic Method)

Note: This method is not inclusive with respect to specifications (*e.g.,* equipment and supplies) and procedures (*e.g.,* sampling and analytical) essential to its performance. Some material is incorporated by reference from other methods in this part. Therefore, to obtain reliable results, persons using this method should have a thorough knowledge of at least the following additional test methods: Method 1, Method 3, Method 6, Method 7, and Method 7C.

1.0 Scope and Application

1.1 Analytes.

Analyte	CAS No.	Sensitivity
Nitrogen oxides (NO_X), as NO_2, including:		
Nitric oxide (NO)	10102–43–9	
Nitrogen dioxide (NO_2)	10102–44–0	7 ppmv

1.2 Applicability. This method applies to the measurement of NO_X emissions from fossil-fuel fired steam generators, electric utility plants, nitric acid plants, or other sources as specified in the regulations.

1.3 Data Quality Objectives. Adherence to the requirements of this method will enhance the quality of the data obtained from air pollutant sampling methods.

2.0 Summary of Method

An integrated gas sample is extracted from the stack and passed through impingers containing an alkaline-potassium permanganate solution; NO_X ($NO + NO_2$) emissions are oxidized to NO_3^-. Then NO_3^- is analyzed by ion chromatography.

3.0 Definitions [Reserved]

4.0 Interferences

Same as in Method 7C, Section 4.0.

5.0 Safety

5.1 Disclaimer. This method may involve hazardous materials, operations, and equipment. This test method may not address all of the safety problems associated with its use. It is the responsibility of the user of this test method to establish appropriate safety and health practices and to determine the applicability of regulatory limitations prior to performing this test method.

5.2 Corrosive reagents. The following reagents are hazardous. Personal protective equipment and safe procedures are useful in preventing chemical splashes. If contact occurs, immediately flush with copious amounts of water for at least 15 minutes. Remove clothing under shower and decontaminate. Treat residual chemical burns as thermal burns.

5.2.1 Hydrogen Peroxide (H_2O_2). Irritating to eyes, skin, nose, and lungs. 30% H_2O_2 is a strong oxidizing agent; avoid contact with skin, eyes, and combustible material. Wear gloves when handling.

5.2.2 Sodium Hydroxide (NaOH). Causes severe damage to eye tissues and to skin. Inhalation causes irritation to nose, throat, and lungs. Reacts exothermically with limited amounts of water.

5.2.3 Potassium Permanganate ($KMnO_4$). Caustic, strong oxidizer. Avoid bodily contact with.

6.0 Equipment and Supplies

6.1 Sample Collection and Sample Recovery. Same as Method 7C, Section 6.1. A schematic of the sampling train used in performing this method is shown in Figure 7C–1 of Method 7C.

6.2 Sample Preparation and Analysis.

6.2.1 Magnetic Stirrer. With 25- by 10-mm Teflon-coated stirring bars.

6.2.2 Filtering Flask. 500-ml capacity with sidearm.

6.2.3 Buchner Funnel. 75-mm ID, with spout equipped with a 13-mm ID by 90-mm long piece of Teflon tubing to minimize possibility of aspirating sample solution during filtration.

6.2.4 Filter Paper. Whatman GF/C, 7.0-cm diameter.

6.2.5 Stirring Rods.

6.2.6 Volumetric Flask. 250-ml.

6.2.7 Pipettes. Class A.

6.2.8 Erlenmeyer Flasks. 250-ml.

6.2.9 Ion Chromatograph. Equipped with an anion separator column to separate NO_3^-, H_3^+ suppressor, and necessary auxiliary equipment. Nonsuppressed and other forms of ion chromatography may also be used provided that adequate resolution of NO_3^- is obtained. The system must also be able to resolve and detect NO_2^-.

7.0 Reagents and Standards

Note: Unless otherwise indicated, it is intended that all reagents conform to the specifications established by the Committee on Analytical Reagents of the American Chemical Society, where such specifications are available; otherwise, use the best available grade.

7.1 Sample Collection.

7.1.1 Water. Deionized distilled to conform to ASTM specification D 1193–77 or 91 Type 3 (incorporated by reference—see § 60.17).

7.1.2 Potassium Permanganate, 4.0 Percent (w/w), Sodium Hydroxide, 2.0 Percent (w/w). Dissolve 40.0 g of $KMnO_4$ and 20.0 g of NaOH in 940 ml of water.

7.2 Sample Preparation and Analysis.

7.2.1 Water. Same as in Section 7.1.1.

7.2.2 Hydrogen Peroxide (H_2O_2), 5 Percent. Dilute 30 percent H_2O_2 1:5 (v/v) with water.

7.2.3 Blank Solution. Dissolve 2.4 g of $KMnO_4$ and 1.2 g of NaOH in 96 ml of water. Alternatively, dilute 60 ml of $KMnO_4$/NaOH solution to 100 ml.

7.2.4 KNO_3 Standard Solution. Dry KNO_3 at 110°C for 2 hours, and cool in a desiccator. Accurately weigh 9 to 10 g of KNO_3 to within 0.1 mg, dissolve in water, and dilute to 1 liter. Calculate the exact NO_3^- concentration using Equation 7D–1 in Section 12.2. This solution is stable for 2 months without preservative under laboratory conditions.

7.2.5 Eluent, 0.003 M $NaHCO_3$/0.0024 M Na_2CO_3. Dissolve 1.008 g $NaHCO_3$ and 1.018 g Na_2CO_3 in water, and dilute to 4 liters. Other eluents capable of resolving nitrate ion from sulfate and other species present may be used.

7.2.6 Quality Assurance Audit Samples. Same as Method 7, Section 7.3.10. When requesting audit samples, specify that they be in the appropriate concentration range for Method 7D.

8.0 Sample Collection, Preservation, Transport, and Storage.

8.1 Sampling. Same as in Method 7C, Section 8.1.

8.2 Sample Recovery. Same as in Method 7C, Section 8.2.

8.3 Sample Preparation for Analysis.

Note: Samples must be analyzed within 28 days of collection.

8.3.1 Note the level of liquid in the sample container, and determine whether any sample was lost during shipment. If a noticeable amount of

leakage has occurred, the volume lost can be determined from the difference between initial and final solution levels, and this value can then be used to correct the analytical result. Quantitatively transfer the contents to a 1-liter volumetric flask, and dilute to volume.

8.3.2 Sample preparation can be started 36 hours after collection. This time is necessary to ensure that all NO_2^- is converted to NO_3^- in the collection solution. Take a 50-ml aliquot of the sample and blank, and transfer to 250-ml Erlenmeyer flasks. Add a magnetic stirring bar. Adjust the stirring rate to as fast a rate as possible without loss of solution. Add 5 percent H_2O_2 in increments of approximately 5 ml using a 5-ml pipette. When the $KMnO_4$ color appears to have been removed, allow the precipitate to settle, and examine the supernatant liquid. If the liquid is clear, the H_2O_2 addition is complete. If the $KMnO_4$ color persists, add more H_2O_2, with stirring, until the supernatant liquid is clear.

Note: The faster the stirring rate, the less volume of H_2O_2 that will be required to remove the $KMnO_4$.) Quantitatively transfer the mixture to a Buchner funnel containing GF/C filter paper, and filter the precipitate. The spout of the Buchner funnel should be equipped with a 13-mm ID by 90-mm long piece of Teflon tubing. This modification minimizes the possibility of aspirating sample solution during filtration. Filter the mixture into a 500-ml filtering flask. Wash the solid material four times with water. When filtration is complete, wash the Teflon tubing, quantitatively transfer the filtrate to a 250-ml volumetric flask, and dilute to volume. The sample and blank are now ready for NO_3^- analysis.

9.0 Quality Control

Section	Quality control measure	Effect
8.2, 10.1–10.3	Sampling equipment leak-check and calibration.	Ensure accurate measurement of sample volume.
10.4	Spectrophotometer calibration	Ensure linearity of spectrophotometer response to standards.
11.3	Spiked sample analysis	Ensure reduction efficiency of column.
11.6	Audit sample analysis	Evaluate analytical technique, preparation of standards.

10.0 Calibration and Standardizations

10.1 Dry Gas Meter (DGM) System.

10.1.1 Initial Calibration. Same as in Method 6, Section 10.1.1. For detailed instructions on carrying out this calibration, it is suggested that Section 3.5.2 of Citation 4 in Section 16.0 of Method 7C be consulted.

10.1.2 Post-Test Calibration Check. Same as in Method 6, Section 10.1.2.

10.2 Thermometers for DGM and Barometer. Same as in Method 6, Sections 10.2 and 10.4, respectively.

10.3 Ion Chromatograph.

10.3.1 Dilute a given volume (1.0 ml or greater) of the KNO_3 standard solution to a convenient volume with water, and use this solution to prepare calibration standards. Prepare at least four standards to cover the range of the samples being analyzed. Use pipettes for all additions. Run standards as instructed in Section 11.2. Determine peak height or area, and plot the individual values versus concentration in µg NO_3^-/ml.

10.3.2 Do not force the curve through zero. Draw a smooth curve through the points. The curve should be linear. With the linear curve, use linear regression to determine the calibration equation.

11.0 Analytical Procedures

11.1 The following chromatographic conditions are recommended: 0.003 M $NaHCO_3$/0.0024 Na_2CO_3 eluent solution (Section 7.2.5), full scale range, 3 µMHO; sample loop, 0.5 ml; flow rate, 2.5 ml/min. These conditions should give a NO_3^- retention time of approximately 15 minutes (Figure 7D–1).

11.2 Establish a stable baseline. Inject a sample of water, and determine whether any NO_3^- appears in the chromatogram. If NO_3^- is present, repeat the water load/injection procedure approximately five times; then re-inject a water sample and observe the chromatogram. When no NO_3^- is present, the instrument is ready for use. Inject calibration standards. Then inject samples and a blank. Repeat the injection of the calibration standards (to compensate for any drift in response of the instrument). Measure the NO_3^- peak height or peak area, and determine the sample concentration from the calibration curve.

11.3 Audit Analysis. Same as in Method 7, Section 11.4

12.0 Data Analysis and Calculations

Carry out calculations, retaining at least one extra significant figure beyond that of the acquired data. Round off figures after final calculation.

12.1 Nomenclature. Same as in Method 7C, Section 12.1.

12.2 NO_3^- concentration. Calculate the NO_3^- concentration in the KNO_3 standard solution (see Section 7.2.4) using the following equation:

$$\frac{\mu g\ NO_3^-}{ml} = g\ of\ KNO_3 \times 10^3 \times \frac{62.01}{101.10} \qquad \text{Eq. 7D-1}$$

12.3 Sample Volume, Dry Basis, Corrected to Standard Conditions. Same as in Method 7C, Section 12.4.

12.4 Total µg NO_2 Per Sample.

$$m = 250\left(\frac{1000}{50}\right)\left(\frac{46.01}{62.01}\right)(S-B) \qquad \text{Eq. 7D-2}$$

$$= 3710\ (S-B)$$

Where:

250 = Volume of prepared sample, ml.
1000 = Total volume of $KMnO_4$ solution, ml.
50 = Aliquot of $KMnO_4$/NaOH solution, ml.
46.01 = Molecular weight of NO_3^-.
62.01 = Molecular weight of NO_3^-.

12.5 Sample Concentration. Same as in Method 7C, Section 12.7.

13.0 Method Performance

13.1 Precision. The intra-laboratory relative standard deviation for a single measurement is approximately 6 percent at 200 to 270 ppm NO_x.

13.2 Bias. The method does not exhibit any bias relative to Method 7.

13.3 Range. The lower detectable limit is similar to that of Method 7C. No upper limit has been established; however, when using the recommended sampling conditions, the method has been found to collect NO_X emissions quantitatively up to 1782 mg NO_X/m^3, as NO_2 (932 ppm NO_x).

14.0 Pollution Prevention. [Reserved]

15.0 Waste Management. [Reserved]

16.0 References

Same as Method 7C, Section 16.0, References 1, 2, 4, and 5.

BILLING CODE 6560–50–P

17.0 Tables, Diagrams, Flowcharts, and Validation Data

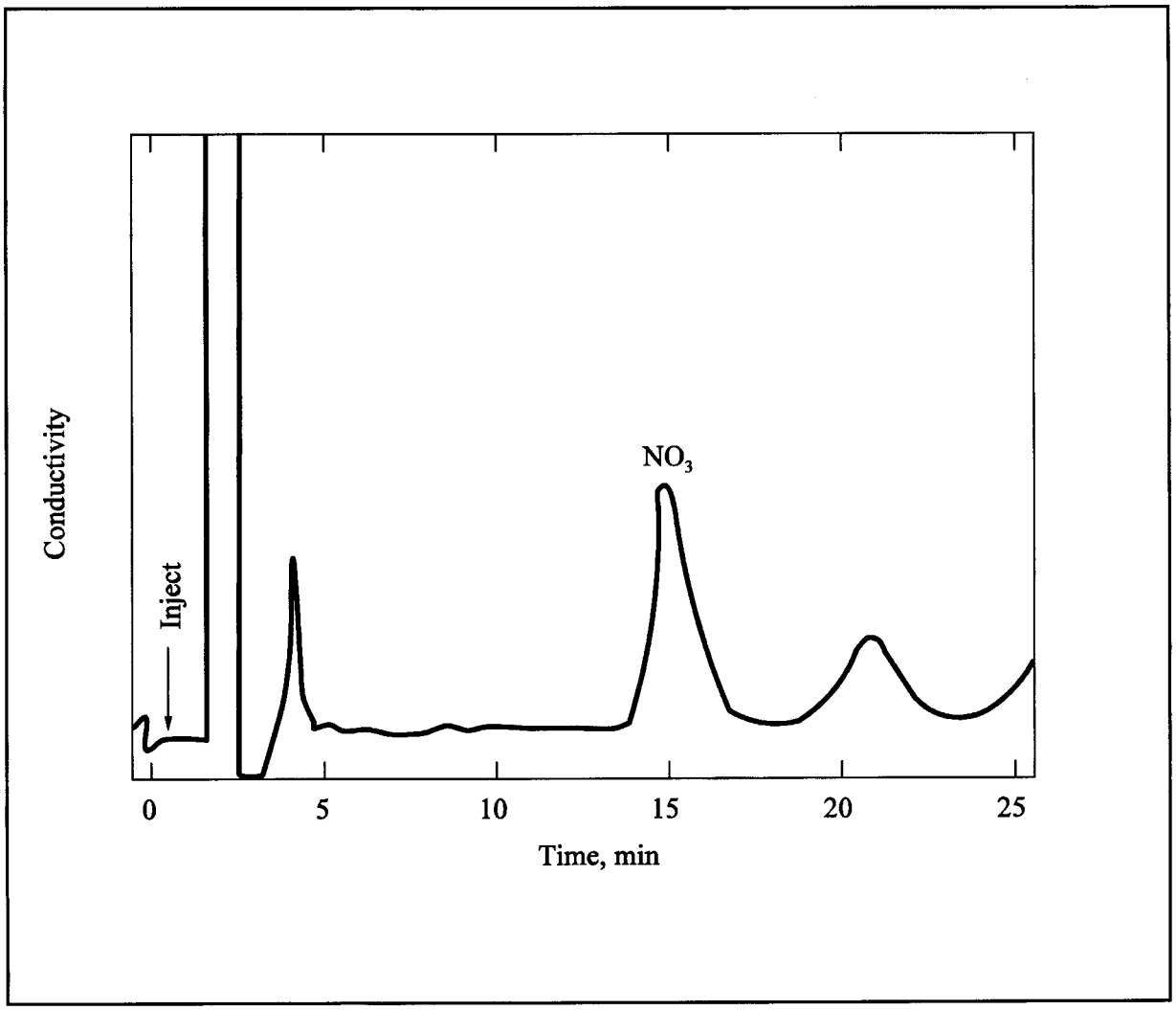

Figure 7D-1. Ion Chromatograph of a Prepared Sample.

BILLING CODE 6560–50–C

* * * * *

Method 8—Determination of Sulfuric Acid and Sulfur Dioxide Emissions From Stationary Sources

Note: This method does not include all of the specifications (*e.g.*, equipment and supplies) and procedures (*e.g.*, sampling and analytical) essential to its performance. Some material is incorporated by reference from other methods in this part. Therefore, to obtain reliable results, persons using this method should have a thorough knowledge

of at least the following additional test methods: Method 1, Method 2, Method 3, Method 5, and Method 6.

1.0 Scope and Application

1.1 Analytes.

Analyte	CAS No.	Sensitivity
Sulfuric acid, including: Sulfuric acid (H_2SO_4) mist, Sulfur trioxide (SO_3).	7664–93–9, 7449–11–9	0.05 mg/m^3 (0.03×10^{-7} lb/ft^3).
Sulfur dioxide (SO_2)	7449–09–5	1.2 mg/m^3 (3×10^{-9} lb/ft^3).

1.2 Applicability. This method is applicable for the determination of H_2SO_4 (including H_2SO_4 mist and SO_3) and gaseous SO_2 emissions from stationary sources.

Note: Filterable particulate matter may be determined along with H_2SO_4 and SO_2 (subject to the approval of the Administrator) by inserting a heated glass fiber filter between the probe and isopropanol impinger (see Section 6.1.1 of Method 6). If this option is chosen, particulate analysis is gravimetric only; sulfuric acid is not determined separately.

1.3 Data Quality Objectives. Adherence to the requirements of this method will enhance the quality of the data obtained from air pollutant sampling methods.

2.0 Summary of Method

A gas sample is extracted isokinetically from the stack. The H_2SO_4 and the SO_2 are separated, and both fractions are measured separately by the barium-thorin titration method.

3.0 Definitions. [Reserved]

4.0 Interferences

4.1 Possible interfering agents of this method are fluorides, free ammonia, and dimethyl aniline. If any of these interfering agents is present (this can be determined by knowledge of the process), alternative methods, subject to the approval of the Administrator, are required.

5.0 Safety

5.1 Disclaimer. This method may involve hazardous materials, operations, and equipment. This test method may not address all of the safety problems associated with its use. It is the responsibility of the user of this test method to establish appropriate safety and health practices and determine the applicability of regulatory limitations prior to performing this test method.

5.2 Corrosive reagents. Same as Method 6, Section 5.2.

6.0 Equipment and Supplies

6.1 Sample Collection. Same as Method 5, Section 6.1, with the following additions and exceptions:

6.1.1 Sampling Train. A schematic of the sampling train used in this method is shown in Figure 8–1; it is similar to the Method 5 sampling train, except that the filter position is different, and the filter holder does not have to be heated. See Method 5, Section 6.1.1, for details and guidelines on operation and maintenance.

6.1.1.1 Probe Liner. Borosilicate or quartz glass, with a heating system to prevent visible condensation during sampling. Do not use metal probe liners.

6.1.1.2 Filter Holder. Borosilicate glass, with a glass frit filter support and a silicone rubber gasket. Other gasket materials (*e.g.*, Teflon or Viton) may be used, subject to the approval of the Administrator. The holder design shall provide a positive seal against leakage from the outside or around the filter. The filter holder shall be placed between the first and second impingers. Do not heat the filter holder.

6.1.1.3 Impingers. Four, of the Greenburg-Smith design, as shown in Figure 8–1. The first and third impingers must have standard tips. The second and fourth impingers must be modified by replacing the insert with an approximately 13-mm (½-in.) ID glass tube, having an unconstricted tip located 13 mm (½ in.) from the bottom of the impinger. Similar collection systems, subject to the approval of the Administrator, may be used.

6.1.1.4 Temperature Sensor. Thermometer, or equivalent, to measure the temperature of the gas leaving the impinger train to within 1 °C (2 °F).

6.2 Sample Recovery. The following items are required for sample recovery:

6.2.1 Wash Bottles. Two polyethylene or glass bottles, 500-ml.

6.2.2 Graduated Cylinders. Two graduated cylinders (volumetric flasks may be used), 250-ml, 1-liter.

6.2.3 Storage Bottles. Leak-free polyethylene bottles, 1-liter size (two for each sampling run).

6.2.4 Trip Balance. 500-g capacity, to measure to ± 0.5 g (necessary only if a moisture content analysis is to be done).

6.3 Analysis. The following items are required for sample analysis:

6.3.1 Pipettes. Volumetric 10-ml, 100-ml.

6.3.2 Burette. 50-ml.

6.3.3 Erlenmeyer Flask. 250-ml (one for each sample, blank, and standard).

6.3.4 Graduated Cylinder. 100-ml.

6.3.5 Dropping Bottle. To add indicator solution, 125-ml size.

7.0 Reagents and Standards

Note: Unless otherwise indicated, all reagents are to conform to the specifications established by the Committee on Analytical Reagents of the American Chemical Society, where such specifications are available. Otherwise, use the best available grade.

7.1 Sample Collection. The following reagents are required for sample collection:

7.1.1 Filters and Silica Gel. Same as in Method 5, Sections 7.1.1 and 7.1.2, respectively.

7.1.2 Water. Same as in Method 6, Section 7.1.1.

7.1.3 Isopropanol, 80 Percent by Volume. Mix 800 ml of isopropanol with 200 ml of water.

Note: Check for peroxide impurities using the procedure outlined in Method 6, Section 7.1.2.1.

7.1.4 Hydrogen Peroxide (H^2O^2), 3 Percent by Volume. Dilute 100 ml of 30 percent H_2O_2) to 1 liter with water. Prepare fresh daily.

7.1.5 Crushed Ice.

7.2 Sample Recovery. The reagents and standards required for sample recovery are:

7.2.1 Water. Same as in Section 7.1.2.

7.2.2 Isopropanol, 80 Percent. Same as in Section 7.1.3.

7.3 Sample Analysis. Same as Method 6, Section 7.3.

7.3.1 Quality Assurance Audit Samples. When making compliance determinations, and upon availability, audit samples may be obtained from the appropriate EPA Regional Office or from the responsible enforcement authority.

Note: The responsible enforcement authority should be notified at least 30 days prior to the test date to allow sufficient time for sample delivery.

8.0 Sample Collection, Preservation, Storage, and Transport

8.1 Pretest Preparation. Same as Method 5, Section 8.1, except that filters should be inspected but need not be desiccated, weighed, or identified. If the

effluent gas can be considered dry (i.e., moisture-free), the silica gel need not be weighed.

8.2 Preliminary Determinations. Same as Method 5, Section 8.2.

8.3 Preparation of Sampling Train. Same as Method 5, Section 8.3, with the following exceptions:

8.3.1 Use Figure 8–1 instead of Figure 5–1.

8.3.2 Replace the second sentence of Method 5, Section 8.3.1 with: Place 100 ml of 80 percent isopropanol in the first impinger, 100 ml of 3 percent H_2O_2 in both the second and third impingers; retain a portion of each reagent for use as a blank solution. Place about 200 g of silica gel in the fourth impinger.

8.3.3 Ignore any other statements in Section 8.3 of Method 5 that are obviously not applicable to the performance of Method 8.

Note: If moisture content is to be determined by impinger analysis, weigh each of the first three impingers (plus absorbing solution) to the nearest 0.5 g, and record these weights. Weigh also the silica gel (or silica gel plus container) to the nearest 0.5 g, and record.)

8.4 Metering System Leak-Check Procedure. Same as Method 5, Section 8.4.1.

8.5 Pretest Leak-Check Procedure. Follow the basic procedure in Method 5, Section 8.4.2, noting that the probe heater shall be adjusted to the minimum temperature required to prevent condensation, and also that verbage such as ''* * * plugging the inlet to the filter holder * * * '' found in Section 8.4.2.2 of Method 5 shall be replaced by '' * * * plugging the inlet to the first impinger * * * ''. The pretest leak-check is recommended, but is not required.

8.6 Sampling Train Operation. Follow the basic procedures in Method 5, Section 8.5, in conjunction with the following special instructions:

8.6.1 Record the data on a sheet similar to that shown in Figure 8–2 (alternatively, Figure 5–2 in Method 5 may be used). The sampling rate shall not exceed 0.030 m^3/min (1.0 cfm) during the run. Periodically during the test, observe the connecting line between the probe and first impinger for signs of condensation. If condensation does occur, adjust the probe heater setting upward to the minimum temperature required to prevent condensation. If component changes become necessary during a run, a leak-check shall be performed immediately before each change, according to the procedure outlined in Section 8.4.3 of Method 5 (with appropriate modifications, as mentioned in Section 8.5 of this method); record all leak rates. If the leakage rate(s) exceeds the specified rate, the tester shall either void the run or plan to correct the sample volume as outlined in Section 12.3 of Method 5. Leak-checks immediately after component changes are recommended, but not required. If these leak-checks are performed, the procedure in Section 8.4.2 of Method 5 (with appropriate modifications) shall be used.

8.6.2 After turning off the pump and recording the final readings at the conclusion of each run, remove the probe from the stack. Conduct a post-test (mandatory) leak-check as outlined in Section 8.4.4 of Method 5 (with appropriate modifications), and record the leak rate. If the post-test leakage rate exceeds the specified acceptable rate, either correct the sample volume, as outlined in Section 12.3 of Method 5, or void the run.

8.6.3 Drain the ice bath and, with the probe disconnected, purge the remaining part of the train by drawing clean ambient air through the system for 15 minutes at the average flow rate used for sampling.

Note: Clean ambient air can be provided by passing air through a charcoal filter. Alternatively, ambient air (without cleaning) may be used.

8.7 Calculation of Percent Isokinetic. Same as Method 5, Section 8.6.

8.8 Sample Recovery. Proper cleanup procedure begins as soon as the probe is removed from the stack at the end of the sampling period. Allow the probe to cool. Treat the samples as follows:

8.8.1 Container No. 1.

8.8.1.1 If a moisture content analysis is to be performed, clean and weigh the first impinger (plus contents) to the nearest 0.5 g, and record this weight.

8.8.1.2 Transfer the contents of the first impinger to a 250-ml graduated cylinder. Rinse the probe, first impinger, all connecting glassware before the filter, and the front half of the filter holder with 80 percent isopropanol. Add the isopropanol rinse solution to the cylinder. Dilute the contents of the cylinder to 225 ml with 80 percent isopropanol, and transfer the cylinder contents to the storage container. Rinse the cylinder with 25 ml of 80 percent isopropanol, and transfer the rinse to the storage container. Add the filter to the solution in the storage container and mix. Seal the container to protect the solution against evaporation. Mark the level of liquid on the container, and identify the sample container.

8.8.2 Container No. 2.

8.8.2.1 If a moisture content analysis is to be performed, clean and weigh the second and third impingers (plus contents) to the nearest 0.5 g, and record the weights. Also, weigh the spent silica gel (or silica gel plus impinger) to the nearest 0.5 g, and record the weight.

8.8.2.2 Transfer the solutions from the second and third impingers to a 1-liter graduated cylinder. Rinse all connecting glassware (including back half of filter holder) between the filter and silica gel impinger with water, and add this rinse water to the cylinder. Dilute the contents of the cylinder to 950 ml with water. Transfer the solution to a storage container. Rinse the cylinder with 50 ml of water, and transfer the rinse to the storage container. Mark the level of liquid on the container. Seal and identify the sample container.

9.0 Quality Control

9.1 Miscellaneous Quality Control Measures.

Section	Quality control measure	Effect
7.1.3	Isopropanol check	Ensure acceptable level of peroxide impurities in isopropanol.
8.4, 8.5, 10.1	Sampling equipment leak-check and calibration.	Ensure accurate measurement of stack gas flow rate, sample volume.
10.2	Barium standard solution standardization	Ensure normality determination.
11.2	Replicate titrations	Ensure precision of titration determinations.
11.3	Audit sample analysis	Evaluate analyst's technique and standards preparation.

9.2 Volume Metering System Checks. Same as Method 5, Section 9.2.

10.0 Calibration and Standardization

10.1 Sampling Equipment. Same as Method 5, Section 10.0.

10.2 Barium Standard Solution. Same as Method 6, Section 10.5.

11.0 Analytical Procedure

11.1. Sample Loss. Same as Method 6, Section 11.1.

11.2. Sample Analysis.

11.2.1 Container No. 1. Shake the container holding the isopropanol solution and the filter. If the filter breaks up, allow the fragments to settle for a few minutes before removing a sample aliquot. Pipette a 100-ml aliquot of this solution into a 250-ml Erlenmeyer flask, add 2 to 4 drops of thorin indicator, and titrate to a pink endpoint using 0.0100 N barium standard solution. Repeat the titration with a second aliquot of sample, and average the titration values. Replicate titrations must agree within 1 percent or 0.2 ml, whichever is greater.

11.2.2 Container No. 2. Thoroughly mix the solution in the container holding the contents of the second and third impingers. Pipette a 10-ml aliquot of sample into a 250-ml Erlenmeyer flask. Add 40 ml of isopropanol, 2 to 4 drops of thorin indicator, and titrate to a pink endpoint using 0.0100 N barium standard solution. Repeat the titration with a second aliquot of sample, and average the titration values. Replicate titrations must agree within 1 percent or 0.2 ml, whichever is greater.

11.2.3 Blanks. Prepare blanks by adding 2 to 4 drops of thorin indicator to 100 ml of 80 percent isopropanol. Titrate the blanks in the same manner as the samples.

11.3 Audit Sample Analysis.

11.3.1 When the method is used to analyze samples to demonstrate compliance with a source emission regulation, EPA audit samples must be analyzed, subject to availability.

11.3.2 Concurrently analyze audit samples and the compliance samples in the same manner to evaluate the technique of the analyst and the standards preparation.

Note: It is recommended that known quality control samples be analyzed prior to the compliance and audit sample analyses to optimize the system accuracy and precision. These quality control samples may be obtained by contacting the appropriate EPA regional Office or the responsible enforcement authority.

11.3.3 The same analyst, analytical reagents, and analytical system shall be used for the compliance samples and the EPA audit samples. If this condition is met, duplicate auditing of subsequent compliance analyses for the same enforcement agency within a 30-day period is waived. Audit samples may not be used to validate different compliance samples under the jurisdiction of separate enforcement agencies, unless prior arrangements have been made with both enforcement agencies.

11.4 Audit Sample Results.

11.4.1 Calculate the audit sample concentrations in mg/dscm and submit results using the instructions provided with the audit samples.

11.4.2 Report the results of the audit samples and the compliance determination samples along with their identification numbers, and the analyst's name to the responsible enforcement authority. Include this information with reports of any subsequent compliance analyses for the same enforcement authority during the 30-day period.

11.4.3 The concentrations of the audit samples obtained by the analyst shall agree within 5 percent of the actual concentrations. If the 5 percent specification is not met, reanalyze the compliance and audit samples, and include initial and reanalysis values in the test report.

11.4.4 Failure to meet the 5 percent specification may require retests until the audit problems are resolved. However, if the audit results do not affect the compliance or noncompliance status of the affected facility, the Administrator may waive the reanalysis requirement, further audits, or retests and accept the results of the compliance test. While steps are being taken to resolve audit analysis problems, the Administrator may also choose to use the data to determine the compliance or noncompliance status of the affected facility.

12.0 Data Analysis and Calculations

Carry out calculations retaining at least one extra significant figure beyond that of the acquired data. Round off figures after final calculation.

12.1 Nomenclature. Same as Method 5, Section 12.1, with the following additions and exceptions:

C_a = Actual concentration of SO_2 in audit sample, mg/dscm.

C_d = Determined concentration of SO_2 in audit sample, mg/dscm.

C_{H2SO4} = Sulfuric acid (including SO_3) concentration, g/dscm (lb/dscf).

C_{SO2} = Sulfur dioxide concentration, g/dscm (lb/dscf).

N = Normality of barium perchlorate titrant, meq/ml.

RE = Relative error of QA audit sample analysis, percent

V_a = Volume of sample aliquot titrated, 100 ml for H_2SO_4 and 10 ml for SO_2.

V_{soln} = Total volume of solution in which the sample is contained, 250 ml for the SO_2 sample and 1000 ml for the H_2SO_4 sample.

V_t = Volume of barium standard solution titrant used for the sample, ml.

V_{tb} = Volume of barium standard solution titrant used for the blank, ml.

12.2 Average Dry Gas Meter Temperature and Average Orifice Pressure Drop. See data sheet (Figure 8–2).

12.3 Dry Gas Volume. Same as Method 5, Section 12.3.

12.4 Volume of Water Vapor Condensed and Moisture Content. Calculate the volume of water vapor using Equation 5–2 of Method 5; the weight of water collected in the impingers and silica gel can be converted directly to milliliters (the specific gravity of water is 1 g/ml). Calculate the moisture content of the stack gas (B_{ws}) using Equation 5–3 of Method 5. The **Note** in Section 12.5 of Method 5 also applies to this method. Note that if the effluent gas stream can be considered dry, the volume of water vapor and moisture content need not be calculated.

12.5 Sulfuric Acid Mist (Including SO_3) Concentration.

$$C_{H_2SO_4} = K_3\left[N\left(V_t - V_{tb}\right)\left(V_{soln}/V_a\right)\right]/V_{m(std)} \qquad \text{Eq. 8-1}$$

Where:

K_3 = 0.04904 g/meq for metric units,

$K_3 = 1.081 \times 10^{-4}$ lb/meq for English units.

12.6 Sulfur Dioxide Concentration.

$$C_{SO_2} = K_4\left[N\left(V_t - V_{tb}\right)\left(V_{soln}/V_a\right)\right]/V_{m(std)} \qquad \text{Eq. 8-2}$$

Where:

K_4 = 0.03203 g/meq for metric units,

$K_4 = 7.061 \times 10^{-5}$ lb/meq for English units.

12.7 Isokinetic Variation. Same as Method 5, Section 12.11.

12.8 Stack Gas Velocity and Volumetric Flow Rate. Calculate the average stack gas velocity and volumetric flow rate, if needed, using data obtained in this method and the equations in Sections 12.6 and 12.7 of Method 2.

12.9 Relative Error (RE) for QA Audit Samples. Same as Method 6, Section 12.4.

13.0 Method Performance

13.1 Analytical Range. Collaborative tests have shown that the minimum detectable limits of the method are 0.06 mg/m^3 (4×10^{-9} lb/ft^3) for H_2SO_4 and 1.2 mg/m^3 (74×10^{-9} lb/ft^3) for SO_2. No upper limits have been established. Based on theoretical calculations for 200 ml of 3 percent H_2O_2 solution, the upper concentration limit for SO_2 in a 1.0 m^3 (35.3 ft^3) gas sample is about 12,000 mg/m^3 (7.7×10^{-4} lb/ft^3). The upper limit can be extended by increasing the quantity of peroxide solution in the impingers.

14.0 Pollution Prevention. [Reserved]

15.0 Waste Management. [Reserved]

16.0 References

Same as Section 17.0 of Methods 5 and 6.

BILLING CODE 6560–50–C

17.0 Tables, Diagrams, Flowcharts, and Validation Data

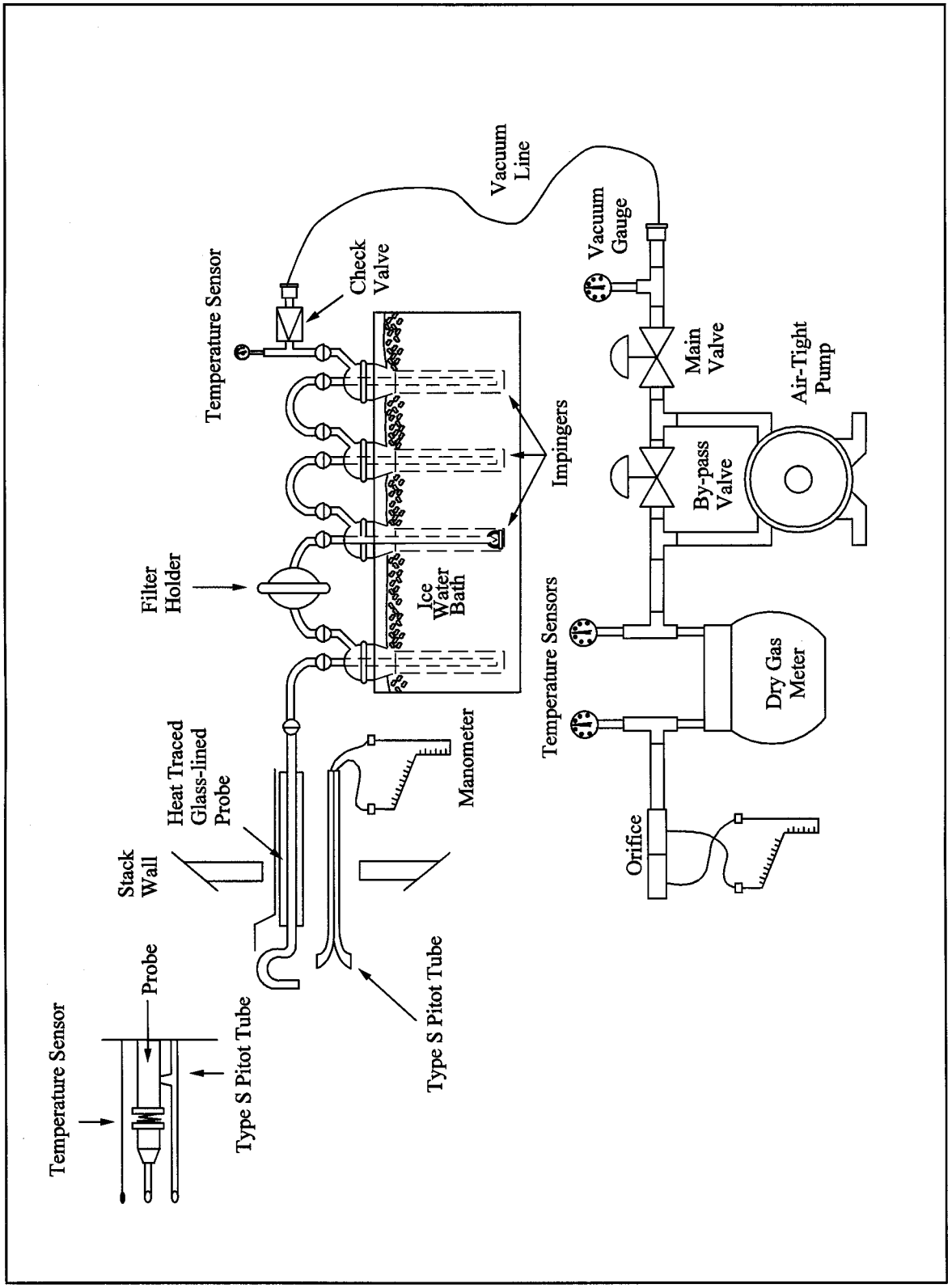

Figure 8-1. Sulfuric Acid Sampling Train.

Plant _____
Location _____
Operator _____
Date _____
Run No. _____
Sample box No. _____
Meter box No. _____
Meter ΔH@ _____
C factor _____
Pitot tube coefficient, C_p _____

SCHEMATIC OF STACK CROSS SECTION

Ambient temperature _____
Barometric pressure _____
Assumed moisture, % _____
Probe length, (ft.) _____
Nozzle identification No. _____
Average calibrated nozzle diameter, (in.) _____
Probe heater setting _____
Leak rate, (cfm) _____
Static pressure, (in. Hg) _____
Probe liner material _____
Filter No. _____

Traverse point number	Sampling time	Vacuum	Stack temperature	Velocity head	Pressure differential across orifice meter	Gas meter reading	Gas sample temperature at dry gas meter		Filter temperature	Temperature of gas leaving condenser or last impinger
							Inlet	Outlet		
	min.	(in.Hg)	(T_s) (°F)	(ΔP_s) (in. H_2O)	(in. H_2O)	(ft³)	(°F)	(°F)	(°F)	(°F)
Total							Avg.	Avg.		
Average							Avg.			

Figure 8-2. Field Data Sheet.

* * * * *

BILLING CODE 6560–50–C

Method 10A—Determination of Carbon Monoxide Emissions in Certifying Continuous Emission Monitoring Systems at Petroleum Refineries

Note: This method does not include all of the specifications (*e.g.,* equipment and supplies) and procedures (*e.g.,* sampling and analytical) essential to its performance. Some material is incorporated by reference from other methods in this part. Therefore, to obtain reliable results, persons using this method should have a thorough knowledge of at least the following additional test methods: Method 1, Method 4, and Method 5.

1.0 Scope and Application

1.1 Analytes.

Analyte	CAS No.	Sensitivity
Carbon monoxide (CO)	630–08–0	3 ppmv

1.2 Applicability. This method is applicable for the determination of CO emissions at petroleum refineries. This method serves as the reference method in the relative accuracy test for nondispersive infrared (NDIR) CO continuous emission monitoring systems (CEMS) that are required to be installed in petroleum refineries on fluid catalytic cracking unit catalyst regenerators (§ 60.105(a)(2) of this part).

1.3 Data Quality Objectives. Adherence to the requirements of this method will enhance the quality of the data obtained from air pollutant sampling methods.

2.0 Summary of Method

An integrated gas sample is extracted from the stack, passed through an alkaline permanganate solution to remove sulfur oxides and nitrogen oxides, and collected in a Tedlar bag. The CO concentration in the sample is measured spectrophotometrically using the reaction of CO with *p*-sulfaminobenzoic acid.

3.0 Definitions. [Reserved]

4.0 Interferences

Sulfur oxides, nitric oxide, and other acid gases interfere with the colorimetric reaction. They are removed by passing the sampled gas through an alkaline potassium permanganate scrubbing solution. Carbon dioxide (CO_2) does not interfere, but, because it is removed by the scrubbing solution, its concentration must be measured independently and an appropriate volume correction made to the sampled gas.

5.0 Safety

5.1 Disclaimer. This method may involve hazardous materials, operations, and equipment. This test method may not address all of the safety problems associated with its use. It is the responsibility of the user of this test method to establish appropriate safety and health practices and determine the applicability of regulatory limitations prior to performing this test method. The analyzer users manual should be consulted for specific precautions to be taken with regard to the analytical procedure.

5.2 Corrosive reagents. The following reagents are hazardous. Personal protective equipment and safe procedures are useful in preventing chemical splashes. If contact occurs, immediately flush with copious amounts of water for at least 15 minutes. Remove clothing under shower and decontaminate. Treat residual chemical burns as thermal burns.

5.2.1 Sodium Hydroxide (NaOH). Causes severe damage to eyes and skin. Inhalation causes irritation to nose, throat, and lungs. Reacts exothermically with limited amounts of water.

6.0 Equipment and Supplies

6.1 Sample Collection. The sampling train shown in Figure 10A–1 is required for sample collection. Component parts are described below:

6.1.1 Probe. Stainless steel, sheathed Pyrex glass, or equivalent, equipped with a glass wool plug to remove particulate matter.

6.1.2 Sample Conditioning System. Three Greenburg-Smith impingers connected in series with leak-free connections.

6.1.3 Pump. Leak-free pump with stainless steel and Teflon parts to transport sample at a flow rate of 300 ml/min (0.01 ft^3/min) to the flexible bag.

6.1.4 Surge Tank. Installed between the pump and the rate meter to eliminate the pulsation effect of the pump on the rate meter.

6.1.5 Rate Meter. Rotameter, or equivalent, to measure flow rate at 300 ml/min (0.01 ft^3/min). Calibrate according to Section 10.2.

6.1.6 Flexible Bag. Tedlar, or equivalent, with a capacity of 10 liters (0.35 ft^3) and equipped with a sealing quick-connect plug. The bag must be leak-free according to Section 8.1. For protection, it is recommended that the bag be enclosed within a rigid container.

6.1.7 Valves. Stainless-steel needle valve to adjust flow rate, and stainless-steel three-way valve, or equivalent.

6.1.8 CO_2 Analyzer. Fyrite, or equivalent, to measure CO_2 concentration to within O.5 percent.

6.1.9 Volume Meter. Dry gas meter, capable of measuring the sample volume under calibration conditions of 300 ml/min (0.01 ft^3/min) for 10 minutes.

6.1.10 Pressure Gauge. A water filled U-tube manometer, or equivalent, of about 30 cm (12 in.) to leak-check the flexible bag.

6.2 Sample Analysis.

6.2.1 Spectrophotometer. Single- or double-beam to measure absorbance at 425 and 600 nm. Slit width should not exceed 20 nm.

6.2.2 Spectrophotometer Cells. 1-cm pathlength.

6.2.3 Vacuum Gauge. U-tube mercury manometer, 1 meter (39 in.), with 1-mm divisions, or other gauge capable of measuring pressure to within 1 mm Hg.

6.2.4 Pump. Capable of evacuating the gas reaction bulb to a pressure equal to or less than 40 mm Hg absolute, equipped with coarse and fine flow control valves.

6.2.5 Barometer. Mercury, aneroid, or other barometer capable of measuring atmospheric pressure to within 1 mm Hg.

6.2.6 Reaction Bulbs. Pyrex glass, 100-ml with Teflon stopcock (Figure 10A–2), leak-free at 40 mm Hg, designed so that 10 ml of the colorimetric reagent can be added and removed easily and accurately. Commercially available gas sample bulbs such as Supelco Catalog No. 2–2161 may also be used.

6.2.7 Manifold. Stainless steel, with connections for three reaction bulbs and the appropriate connections for the manometer and sampling bag as shown in Figure 10A–3.

6.2.8 Pipets. Class A, 10–ml size.

6.2.9 Shaker Table. Reciprocating-stroke type such as Eberbach Corporation, Model 6015. A rocking arm or rotary-motion type shaker may also be used. The shaker must be large enough to accommodate at least six gas sample bulbs simultaneously. It may be necessary to construct a table top extension for most commercial shakers to provide sufficient space for the needed bulbs (Figure 10A–4).

6.2.10 Valve. Stainless steel shut-off valve.

6.2.11 Analytical Balance. Capable of weighing to 0.1 mg.

7.0 Reagents and Standards

Unless otherwise indicated, all reagents shall conform to the specifications established by the Committee on Analytical Reagents of the American Chemical Society, where such specifications are available; otherwise, the best available grade shall be used.

7.1 Sample Collection.

7.1.1 Water. Deionized distilled, to conform to ASTM D 1193–77 or 91, Type 3 (incorporated by reference—see § 60.17). If high concentrations of organic matter are not expected to be present, the potassium permanganate test for oxidizable organic matter may be omitted.

7.1.2 Alkaline Permanganate Solution, 0.25 M $KMnO_4$/1.5 M Sodium Hydroxide (NaOH). Dissolve 40 g $KMnO_4$ and 60 g NaOH in approximately 900 ml water, cool, and dilute to 1 liter.

7.2 Sample Analysis.

7.2.1 Water. Same as in Section 7.1.1.

7.2.2 1 M Sodium Hydroxide Solution. Dissolve 40 g NaOH in approximately 900 ml of water, cool, and dilute to 1 liter.

7.2.3 0.1 M NaOH Solution. Dilute 50 ml of the 1 M NaOH solution prepared in Section 7.2.2 to 500 ml.

7.2.4 0.1 M Silver Nitrate ($AgNO_3$) Solution. Dissolve 8.5 g $AgNO_3$ in water, and dilute to 500 ml.

7.2.5 0.1 M Para-Sulfaminobenzoic Acid (p-SABA) Solution. Dissolve 10.0 g p-SABA in 0.1 M NaOH, and dilute to 500 ml with 0.1 M NaOH.

7.2.6 Colorimetric Solution. To a flask, add 100 ml of 0.1 M p-SABA solution and 100 ml of 0.1 M $AgNO_3$ solution. Mix, and add 50 ml of 1 M NaOH with shaking. The resultant solution should be clear and colorless. This solution is acceptable for use for a period of 2 days.

7.2.7 Standard Gas Mixtures. Traceable to National Institute of Standards and Technology (NIST) standards and containing between 50 and 1000 ppm CO in nitrogen. At least two concentrations are needed to span each calibration range used (Section 10.3). The calibration gases must be certified by the manufacturer to be within 2 percent of the specified concentrations.

8.0 Sample Collection, Preservation, Storage, and Transport

8.1 Sample Bag Leak-Checks. While a bag leak-check is required after bag use, it should also be done before the bag is used for sample collection. The bag should be leak-checked in the inflated and deflated condition according to the following procedure:

8.1.1 Connect the bag to a water manometer, and pressurize the bag to 5 to 10 cm H_2O (2 to 4 in H_2O). Allow the bag to stand for 60 minutes. Any displacement in the water manometer indicates a leak.

8.1.2 Evacuate the bag with a leakless pump that is connected to the downstream side of a flow indicating device such as a 0- to 100-ml/min rotameter or an impinger containing water. When the bag is completely evacuated, no flow should be evident if the bag is leak-free.

8.2 Sample Collection.

8.2.1 Evacuate the Tedlar bag completely using a vacuum pump. Assemble the apparatus as shown in Figure 10A–1. Loosely pack glass wool in the tip of the probe. Place 400 ml of alkaline permanganate solution in the first two impingers and 250 ml in the third. Connect the pump to the third impinger, and follow this with the surge tank, rate meter, and 3-way valve. Do not connect the Tedlar bag to the system at this time.

8.2.2 Leak-check the sampling system by plugging the probe inlet, opening the 3-way valve, and pulling a vacuum of approximately 250 mm Hg on the system while observing the rate meter for flow. If flow is indicated on the rate meter, do not proceed further until the leak is found and corrected.

8.2.3 Purge the system with sample gas by inserting the probe into the stack and drawing the sample gas through the system at 300 ml/min ± 10 percent for 5 minutes. Connect the evacuated Tedlar bag to the system, record the starting time, and sample at a rate of 300 ml/min for 30 minutes, or until the Tedlar bag is nearly full. Record the sampling time, the barometric pressure, and the ambient temperature. Purge the system as described above immediately before each sample.

8.2.4 The scrubbing solution is adequate for removing sulfur oxides and nitrogen oxides from 50 liters (1.8 ft^3) of stack gas when the concentration of each is less than 1,000 ppm and the CO_2 concentration is less than 15 percent. Replace the scrubber solution after every fifth sample.

8.3 Carbon Dioxide Measurement. Measure the CO_2 content in the stack to the nearest 0.5 percent each time a CO sample is collected. A simultaneous grab sample analyzed by the Fyrite analyzer is acceptable.

9.0 Quality Control

9.1 Miscellaneous Quality Control Measures.

Section	Quality control measure	Effect
8.1	Sampling equipment leak-checks and calibration.	Ensure accuracy and precision of sampling measurements.
10.3	Spectrophotometer calibration	Ensure linearity of spectrophotometer response to standards.

9.2 Volume Metering System Checks. Same as Method 5, Section 9.2.

10.0 Calibration and Standardization

Note: Maintain a laboratory log of all calibrations.

10.1 Gas Bulb Calibration. Weigh the empty bulb to the nearest 0.1 g. Fill the bulb to the stopcock with water, and again weigh to the nearest 0.1 g. Subtract the tare weight, and calculate the volume in liters to three significant figures using the density of water at the measurement temperature. Record the volume on the bulb. Alternatively, mark an identification number on the bulb, and record the volume in a notebook.

10.2 Rate Meter Calibration. Assemble the system as shown in Figure 10A–1 (the impingers may be removed), and attach a volume meter to the probe inlet. Set the rotameter at 300 ml/min, record the volume meter reading, start the pump, and pull ambient air through the system for 10 minutes. Record the final volume meter reading. Repeat the procedure and average the results to determine the volume of gas that passed through the system.

10.3 Spectrophotometer Calibration Curve.

10.3.1 Collect the standards as described in Section 8.2. Prepare at least two sets of three bulbs as standards to span the 0 to 400 or 400 to 1000 ppm range. If any samples span both concentration ranges, prepare a calibration curve for each range using separate reagent blanks. Prepare a set of three bulbs containing colorimetric reagent but no CO to serve as a reagent

blank. Analyze each standard and blank according to the sample analysis procedure of Section 11.0 Reject the standard set where any of the individual bulb absorbances differs from the set mean by more than 10 percent.

10.3.2 Calculate the average absorbance for each set (3 bulbs) of standards using Equation 10A–1 and Table 10A–1. Construct a graph of average absorbance for each standard against its corresponding concentration. Draw a smooth curve through the points. The curve should be linear over the two concentration ranges discussed in Section 13.3.

11.0 Analytical Procedure

11.1 Assemble the system shown in Figure 10A–3, and record the information required in Table 10A–1 as it is obtained. Pipet 10.0 ml of the colorimetric reagent into each gas reaction bulb, and attach the bulbs to the system. Open the stopcocks to the reaction bulbs, but leave the valve to the Tedlar bag closed. Turn on the pump, fully open the coarse-adjust flow valve, and slowly open the fine-adjust valve until the pressure is reduced to at least 40 mm Hg. Now close the coarse adjust valve, and observe the manometer to be certain that the system is leak-free. Wait a minimum of 2 minutes. If the pressure has increased less than 1 mm Hg, proceed as described below. If a leak is present, find and correct it before proceeding further.

11.2 Record the vacuum pressure (P_v) to the nearest 1 mm Hg, and close the reaction bulb stopcocks. Open the Tedlar bag valve, and allow the system to come to atmospheric pressure. Close the bag valve, open the pump coarse adjust valve, and evacuate the system again. Repeat this fill/evacuation procedure at least twice to flush the manifold completely. Close the pump coarse adjust valve, open the Tedlar bag valve, and let the system fill to atmospheric pressure. Open the stopcocks to the reaction bulbs, and let the entire system come to atmospheric pressure. Close the bulb stopcocks, remove the bulbs, record the room temperature and barometric pressure (P_{bar}, to nearest mm Hg), and place the bulbs on the shaker table with their main axis either parallel to or perpendicular to the plane of the table top. Purge the bulb-filling system with ambient air for several minutes between samples. Shake the samples for exactly 2 hours.

11.3 Immediately after shaking, measure the absorbance (A) of each bulb sample at 425 nm if the concentration is less than or equal to 400 ppm CO or at 600 nm if the concentration is above 400 ppm.

Note: This may be accomplished with multiple bulb sets by sequentially collecting sets and adding to the shaker at staggered intervals, followed by sequentially removing sets from the shaker for absorbance measurement after the two-hour designated intervals have elapsed.

11.4 Use a small portion of the sample to rinse a spectrophotometer cell several times before taking an aliquot for analysis. If one cell is used to analyze multiple samples, rinse the cell with deionized distilled water several times between samples. Prepare and analyze standards and a reagent blank as described in Section 10.3. Use water as the reference. Reject the analysis if the blank absorbance is greater than 0.1. All conditions should be the same for analysis of samples and standards. Measure the absorbances as soon as possible after shaking is completed.

11.5 Determine the CO concentration of each bag sample using the calibration curve for the appropriate concentration range as discussed in Section 10.3.

12.0 Calculations and Data Analysis

Carry out calculations retaining at least one extra decimal figure beyond that of the acquired data. Round off figures after final calculation.

12.1 Nomenclature.

A = Sample absorbance, uncorrected for the reagent blank.
A_r = Absorbance of the reagent blank.
A_s = Average sample absorbance per liter, units/liter.
B_w = Moisture content in the bag sample.
C = CO concentration in the stack gas, dry basis, ppm.
C_b = CO concentration of the bag sample, dry basis, ppm.
C_g = CO concentration from the calibration curve, ppm.
F = Volume fraction of CO_2 in the stack.
n = Number of reaction bulbs used per bag sample.
P_b = Barometric pressure, mm Hg.
P_v = Residual pressure in the sample bulb after evacuation, mm Hg.
P_w = Vapor pressure of H_2O in the bag (from Table 10A–2), mm Hg.
V_b = Volume of the sample bulb, liters.
V_r = Volume of reagent added to the sample bulb, 0.0100 liter.

12.2 Average Sample Absorbance per Liter. Calculate A_s for each gas bulb using Equation 10A–1, and record the value in Table 10A–1. Calculate the average A_s for each bag sample, and compare the three values to the average. If any single value differs by more than 10 percent from the average, reject this value, and calculate a new average using the two remaining values.

$$A_s = \frac{(A - A_r)(P_b)}{(V_b - V_r)(P_b - P_v)} \qquad \text{Eq. 10A-1}$$

Note: A and A_r must be at the same wavelength.

12.3 CO Concentration in the Bag. Calculate C_b using Equations 10A–2 and 10A–3. If condensate is visible in the Tedlar bag, calculate B_w using Table 10A–2 and the temperature and barometric pressure in the analysis room. If condensate is not visible, calculate B_w using the temperature and barometric pressure at the sampling site.

$$B_w = \frac{P_w}{P_b} \qquad \text{Eq. 10A-2}$$

$$C_b = \frac{C_g}{(1 - B_w)} \qquad \text{Eq. 10A-3}$$

12.4 CO Concentration in the Stack.

$$C = C_b\,(1 - F) \qquad \text{Eq. 10A-4}$$

13.0 Method Performance

13.1 Precision. The estimated intralaboratory standard deviation of the method is 3 percent of the mean for gas samples analyzed in duplicate in the concentration range of 39 to 412 ppm. The interlaboratory precision has not been established.

13.2 Accuracy. The method contains no significant biases when compared to an NDIR analyzer calibrated with NIST standards.

13.3 Range. Approximately 3 to 1800 ppm CO. Samples having concentrations below 400 ppm are analyzed at 425 nm, and samples having concentrations above 400 ppm are analyzed at 600 nm.

13.4 Sensitivity. The detection limit is 3 ppmv based on a change in concentration equal to three times the standard deviation of the reagent blank solution.

13.5 Stability. The individual components of the colorimetric reagent are stable for at least 1 month. The colorimetric reagent must be used within 2 days after preparation to avoid excessive blank correction. The samples in the Tedlar bag should be stable for at least 1 week if the bags are leak-free.

14.0 Pollution Prevention. [Reserved]

15.0 Waste Management. [Reserved]

16.0 References

1. Butler, F.E., J.E. Knoll, and M.R. Midgett. Development and Evaluation of Methods for Determining Carbon Monoxide Emissions.

U.S. Environmental Protection Agency, Research Triangle Park, N.C. June 1985. 33 pp.

2. Ferguson, B.B., R.E. Lester, and W.J. Mitchell. Field Evaluation of Carbon Monoxide and Hydrogen Sulfide Continuous Emission Monitors at an Oil Refinery. U.S. Environmental Protection Agency, Research Triangle Park, N.C. Publication No. EPA–600/4–82–054. August 1982. 100 pp.

3. Lambert, J.L., and R.E. Weins. Induced Colorimetric Method for Carbon Monoxide. Analytical Chemistry. *46*(7):929–930. June 1974.

4. Levaggi, D.A., and M. Feldstein. The Colorimetric Determination of Low Concentrations of Carbon Monoxide. Industrial Hygiene Journal. *25*:64–66. January-February 1964.

5. Repp, M. Evaluation of Continuous Monitors For Carbon Monoxide in Stationary Sources. U.S. Environmental Protection Agency. Research Triangle Park, N.C. Publication No. EPA–600/2–77–063. March 1977. 155 pp.

6. Smith, F., D.E. Wagoner, and R.P. Donovan. Guidelines for Development of a Quality Assurance Program: Volume VIII—Determination of CO Emissions from Stationary Sources by NDIR Spectrometry. U.S. Environmental Protection Agency. Research Triangle Park, N.C. Publication No. EPA–650/4–74–005–h. February 1975. 96 pp.

17.0 Tables, Diagrams, Flowcharts, and Validation Data

TABLE 10A–1.—DATA RECORDING SHEET FOR SAMPLES ANALYZED IN TRIPLICATE

Sample No./type	Room temp °C	Stack %CO_2	Bulb No.	Bulb vol. liters	Reagent vol. in bulb, liter	Partial pressure of gas in bulb, mm Hg	P_b, mm Hg	Shaking time, min	Abs versus water	$A–A_r$	A_s	Avg A_s
blank												
Std. 1												
Std. 2												
Sample 1												
Sample 2												
Sample 3												

TABLE 10A–2.—MOISTURE CORRECTION

Temperature °C	Vapor pressure of H_2O, mm Hg	Temperature °C	Vapor pressure of H_2, mm Hg
4	6.1	18	15.5
6	7.0	20	17.5
8	8.0	22	19.8
10	9.2	24	22.4
12	10.5	26	25.2
14	12.0	28	28.3
16	13.6	30	31.8

BILLING CODE 6560–50–P

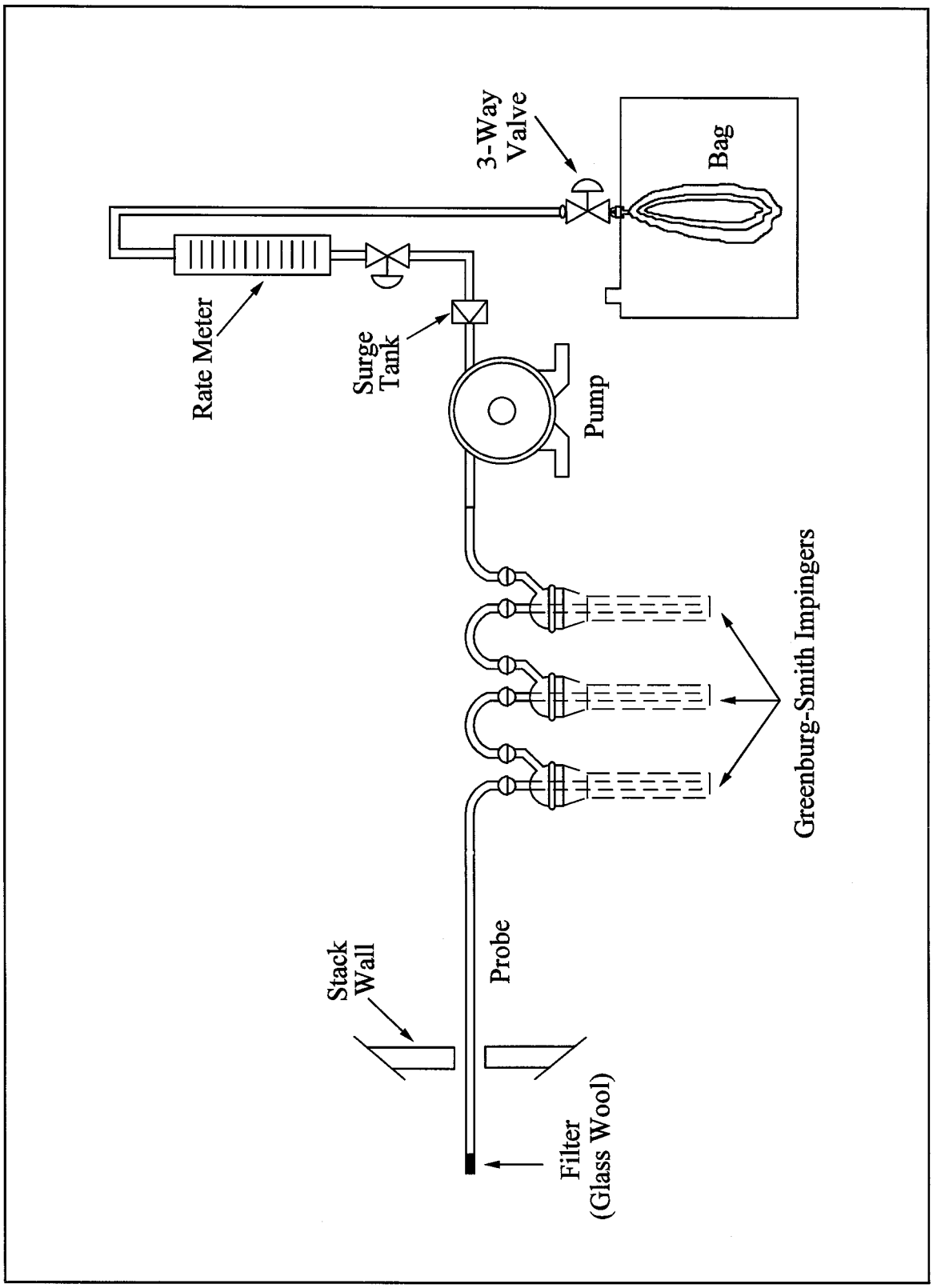

Figure 10A-1. Sampling Train.

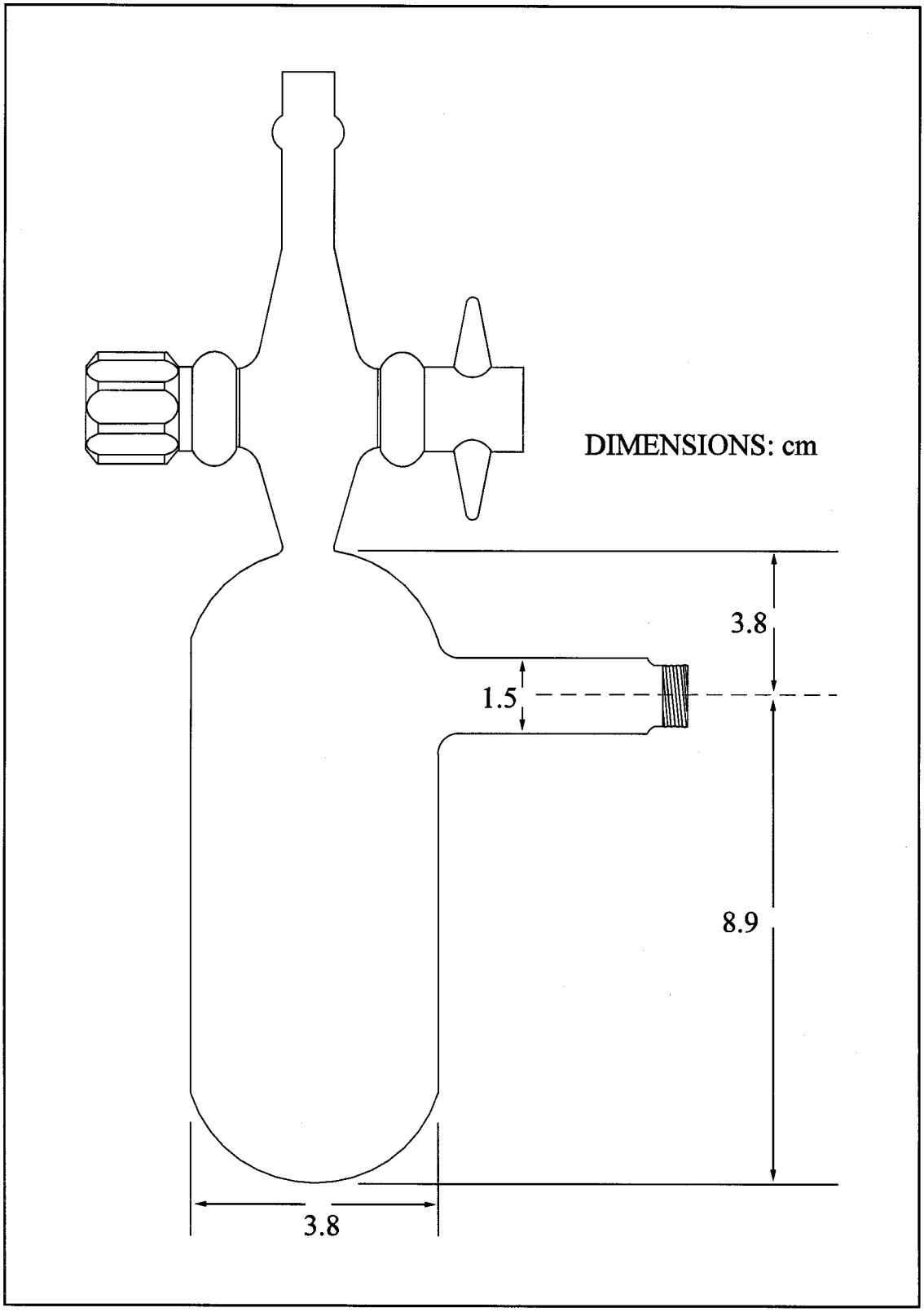

Figure 10A-2. Sample Reaction Bulbs.

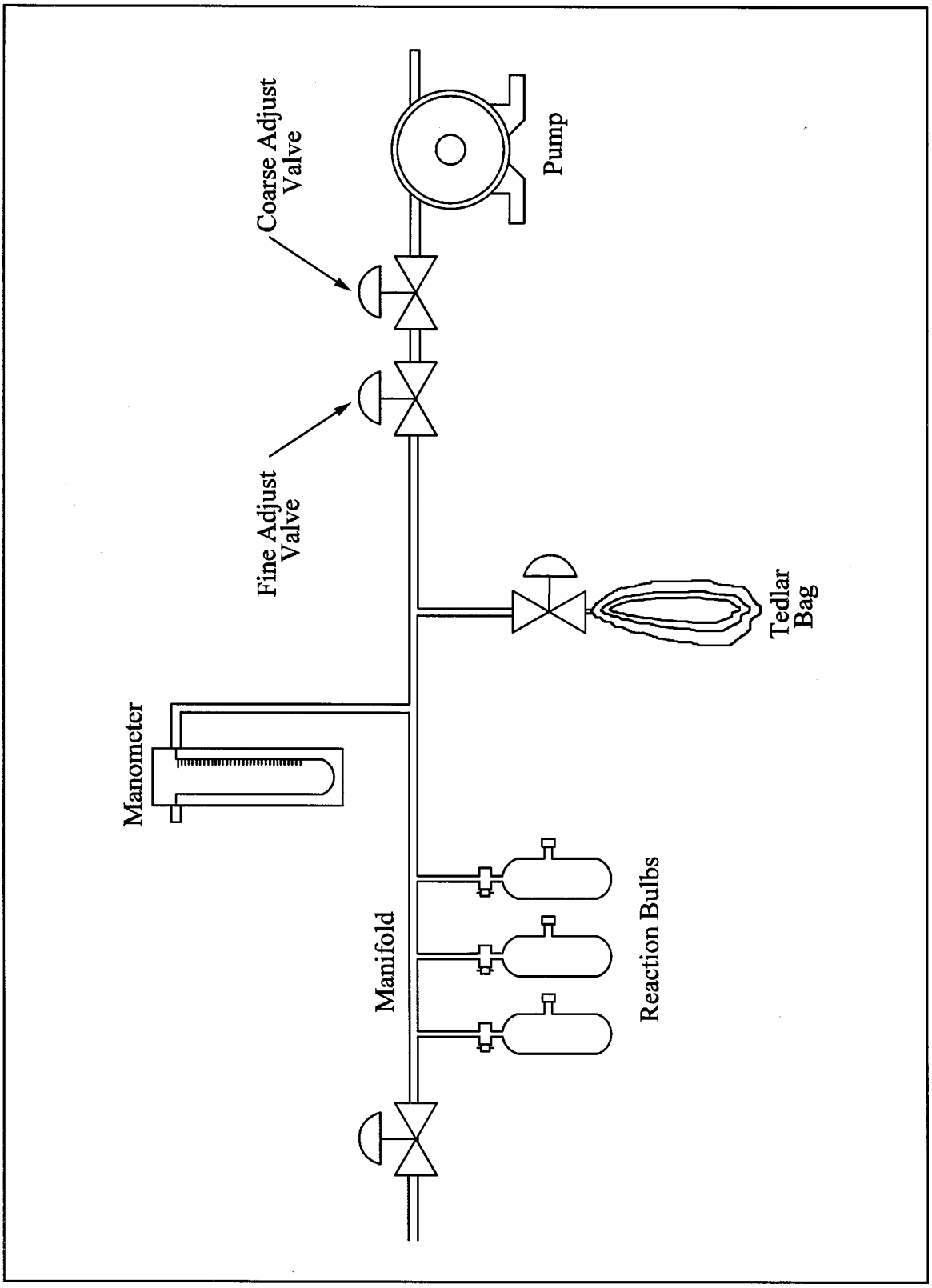

Figure 10A-3. Sample Bulb Filling System.

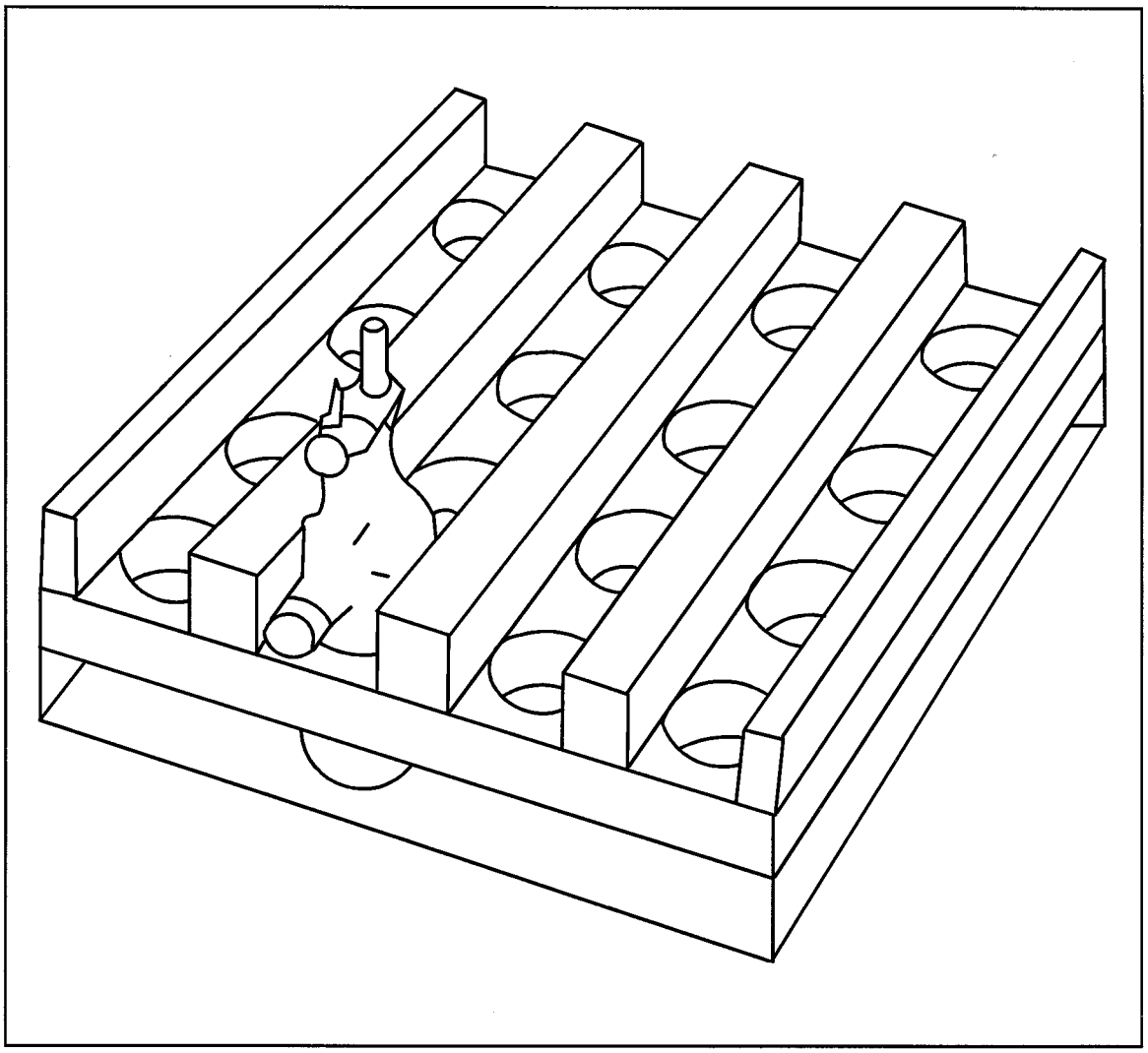

Figure 10A-4. Shaker Table Adapter.

BILLING CODE 6560–50–C

Method 10B—Determination of Carbon Monoxide Emissions From Stationary Sources

Note: This method is not inclusive with respect to specifications (*e.g.,* equipment and supplies) and procedures (*e.g.,* sampling and analytical) essential to its performance. Some material is incorporated by reference from other methods in this part. Therefore, to obtain reliable results, persons using this method should have a thorough knowledge of at least the following additional test methods: Method 1, Method 4, Method 10A, and Method 25.

1.0 Scope and Application

1.1 Analytes.

Analyte	CAS No.	Sensitivity
Carbon monoxide (CO)	630–08–0	Not determined.

1.2 Applicability. This method applies to the measurement of CO emissions at petroleum refineries and from other sources when specified in an applicable subpart of the regulations.

1.3 Data Quality Objectives. Adherence to the requirements of this method will enhance the quality of the data obtained from air pollutant sampling methods.

2.0 Summary of Method

2.1 An integrated gas sample is extracted from the sampling point, passed through a conditioning system to remove interferences, and collected in a Tedlar bag. The CO is separated from the sample by gas chromatography (GC) and catalytically reduced to methane (CH_4) which is determined by flame ionization detection (FID). The analytical portion of this method is identical to applicable sections in Method 25 detailing CO measurement.

3.0 Definitions. [Reserved]

4.0 Interferences

4.1 Carbon dioxide (CO_2) and organics potentially can interfere with the analysis. Most of the CO_2 is removed from the sample by the alkaline permanganate conditioning system; any

residual CO_2 and organics are separated from the CO by GC.

5.0 Safety

5.1 Disclaimer. This method may involve hazardous materials, operations, and equipment. This test method may not address all of the safety problems associated with its use. It is the responsibility of the user of this test method to establish appropriate safety and health practices and determine the applicability of regulatory limitations prior to performing this test method. The analyzer users manual should be consulted for specific precautions concerning the analytical procedure.

6.0 Equipment and Supplies

6.1 Sample Collection. Same as in Method 10A, Section 6.1.

6.2 Sample Analysis. A GC/FID analyzer, capable of quantifying CO in the sample and consisting of at least the following major components, is required for sample analysis. [Alternatively, complete Method 25 analytical systems (Method 25, Section 6.3) are acceptable alternatives when calibrated for CO and operated in accordance with the Method 25 analytical procedures (Method 25, Section 11.0).]

6.2.1 Separation Column. A column capable of separating CO from CO_2 and organic compounds that may be present. A 3.2-mm (⅛-in.) OD stainless steel column packed with 1.7 m (5.5 ft.) of 60/80 mesh Carbosieve S–II (available from Supelco) has been used successfully for this purpose.

6.2.2 Reduction Catalyst. Same as in Method 25, Section 6.3.1.2.

6.2.3 Sample Injection System. Same as in Method 25, Section 6.3.1.4, equipped to accept a sample line from the Tedlar bag.

6.2.4 Flame Ionization Detector. Meeting the linearity specifications of Section 10.3 and having a minimal instrument range of 10 to 1,000 ppm CO.

6.2.5 Data Recording System. Analog strip chart recorder or digital integration system, compatible with the FID, for permanently recording the analytical results.

7.0 Reagents and Standards

7.1 Sample Collection. Same as in Method 10A, Section 7.1.

7.2 Sample Analysis.

7.2.1 Carrier, Fuel, and Combustion Gases. Same as in Method 25, Sections 7.2.1, 7.2.2, and 7.2.3, respectively.

7.2.2 Calibration Gases. Three standard gases with nominal CO concentrations of 20, 200, and 1,000 ppm CO in nitrogen. The calibration gases shall be certified by the manufacturer to be ± 2 percent of the specified concentrations.

7.2.3 Reduction Catalyst Efficiency Check Calibration Gas. Standard CH_4 gas with a nominal concentration of 1,000 ppm in air.

8.0 Sample Collection, Preservation, Storage, and Transport

Same as in Method 10A, Section 8.0.

9.0 Quality Control

Section	Quality control measure	Effect
8.0	Sample bag/sampling system leak-checks	Ensures that negative bias introduced through leakage is minimized.
10.1	Carrier gas blank check	Ensures that positive bias introduced by contamination of carrier gas is less than 5 ppmv.
10.2	Reduction catalyst efficiency check	Ensures that negative bias introduced by inefficient reduction catalyst is less than 5 percent.
10.3	Analyzer calibration	Ensures linearity of analyzer response to standards.
11.2	Triplicate sample analyses	Ensures precision of analytical results.

10.0 Calibration and Standardization

10.1 Carrier Gas Blank Check. Analyze each new tank of carrier gas with the GC analyzer according to Section 11.2 to check for contamination. The corresponding concentration must be less than 5 ppm for the tank to be acceptable for use.

10.2 Reduction Catalyst Efficiency Check. Prior to initial use, the reduction catalyst shall be tested for reduction efficiency. With the heated reduction catalyst bypassed, make triplicate injections of the 1,000 ppm CH_4 gas (Section 7.2.3) to calibrate the analyzer. Repeat the procedure using 1,000 ppm CO gas (Section 7.2.2) with the catalyst in operation. The reduction catalyst operation is acceptable if the CO response is within 5 percent of the certified gas value.

10.3 Analyzer Calibration. Perform this test before the system is first placed into operation. With the reduction catalyst in operation, conduct a linearity check of the analyzer using the standards specified in Section 7.2.2. Make triplicate injections of each calibration gas, and then calculate the average response factor (area/ppm) for each gas, as well as the overall mean of the response factor values. The instrument linearity is acceptable if the average response factor of each calibration gas is within 2.5 percent of the overall mean value and if the relative standard deviation (calculated in Section 12.8 of Method 25) for each set of triplicate injections is less than 2 percent. Record the overall mean of the response factor values as the calibration response factor (R).

11.0 Analytical Procedure

11.1 Preparation for Analysis. Before putting the GC analyzer into routine operation, conduct the calibration procedures listed in Section 10.0. Establish an appropriate carrier flow rate and detector temperature for the specific instrument used.

11.2 Sample Analysis. Purge the sample loop with sample, and then inject the sample. Analyze each sample in triplicate, and calculate the average sample area (A). Determine the bag CO concentration according to Section 12.2.

12.0 Calculations and Data Analysis

Carry out calculations retaining at least one extra significant figure beyond that of the acquired data. Round off results only after the final calculation.

12.1 Nomenclature.

A = Average sample area.

B_w = Moisture content in the bag sample, fraction.

C = CO concentration in the stack gas, dry basis, ppm.

C_b = CO concentration in the bag sample, dry basis, ppm.

F = Volume fraction of CO_2 in the stack, fraction.

P_{bar} = Barometric pressure, mm Hg.

P_w = Vapor pressure of the H_2O in the bag (from Table 10A–2, Method 10A), mm Hg.

R = Mean calibration response factor, area/ppm.

12.2 CO Concentration in the Bag. Calculate C_b using Equations 10B–1 and 10B–2. If condensate is visible in the Tedlar bag, calculate B_w using Table 10A–2 of Method 10A and the temperature and barometric pressure in the analysis room. If condensate is not visible, calculate B_w using the

temperature and barometric pressure at the sampling site.

$$B_w = \frac{P_w}{P_{bar}} \qquad \text{Eq. 10B-1}$$

$$C_b = \frac{A}{R\left(1 - B_w\right)} \qquad \text{Eq. 10B-2}$$

12.3 CO Concentration in the Stack

$$C = C_b\,(1 - F) \qquad \text{Eq. 10B-3}$$

13.0 Method Performance. [Reserved]

14.0 Pollution Prevention. [Reserved]

15.0 Waste Management. [Reserved]

16.0 References

Same as in Method 25, Section 16.0, with the addition of the following:

1. Butler, F.E, J.E. Knoll, and M.R. Midgett. Development and Evaluation of Methods for Determining Carbon Monoxide Emissions. Quality Assurance Division, Environmental Monitoring Systems Laboratory, U.S. Environmental Protection Agency, Research Triangle Park, NC. June 1985. 33 pp.

17.0 Tables, Diagrams, Flowcharts, and Validation Data. [Reserved]

Method 11—Determination of Hydrogen Sulfide Content of Fuel Gas Streams in Petroleum Refineries

1.0 Scope and Application

1.1 Analytes.

Analyte	CAS No.	Sensitivity
Hydrogen sulfide (H_2S)	7783–06–4	8 mg/m^3—740 mg/m^3, (6 ppm—520 ppm).

1.2 Applicability. This method is applicable for the determination of the H_2S content of fuel gas streams at petroleum refineries.

1.3 Data Quality Objectives. Adherence to the requirements of this method will enhance the quality of the data obtained from air pollutant sampling methods.

2.0 Summary of Method

2.1 A sample is extracted from a source and passed through a series of midget impingers containing a cadmium sulfate ($CdSO_4$) solution; H_2S is absorbed, forming cadmium sulfide (CdS). The latter compound is then measured iodometrically.

3.0 Definitions. [Reserved]

4.0 Interferences

4.1 Any compound that reduces iodine (I_2) or oxidizes the iodide ion will interfere in this procedure, provided it is collected in the $CdSO_4$ impingers. Sulfur dioxide in concentrations of up to 2,600 mg/m^3 is removed with an impinger containing a hydrogen peroxide (H_2O_2) solution. Thiols precipitate with H_2S. In the absence of H_2S, only traces of thiols are collected. When methane-and ethane-thiols at a total level of 300 mg/m^3 are present in addition to H_2S, the results vary from 2 percent low at an H_2S concentration of 400 mg/m^3 to 14 percent high at an H_2S concentration of 100 mg/m^3. Carbonyl sulfide at a concentration of 20 percent does not interfere. Certain carbonyl-containing compounds react with iodine and produce recurring end points. However, acetaldehyde and acetone at concentrations of 1 and 3 percent, respectively, do not interfere.

4.2 Entrained H_2O_2 produces a negative interference equivalent to 100 percent of that of an equimolar quantity of H_2S. Avoid the ejection of H_2O_2 into the $CdSO_4$ impingers.

5.0 Safety

5.1 Disclaimer. This method may involve hazardous materials, operations, and equipment. This test method may not address all of the safety problems associated with its use. It is the responsibility of the user of this test method to establish appropriate safety and health practices and determine the applicability of regulatory limitations prior to performing this test method.

5.2 Corrosive reagents. The following reagents are hazardous. Personal protective equipment and safe procedures are useful in preventing chemical splashes. If contact occurs, immediately flush with copious amounts of water for at least 15 minutes. Remove clothing under shower and decontaminate. Treat residual chemical burns as thermal burns.

5.2.1 Hydrogen Peroxide. Irritating to eyes, skin, nose, and lungs. 30% H_2O_2 is a strong oxidizing agent. Avoid contact with skin, eyes, and combustible material. Wear gloves when handling.

5.2.2 Hydrochloric Acid. Highly toxic. Vapors are highly irritating to eyes, skin, nose, and lungs, causing severe damage. May cause bronchitis, pneumonia, or edema of lungs. Exposure to concentrations of 0.13 to 0.2 percent can be lethal in minutes. Will react with metals, producing hydrogen.

6.0 Equipment and Supplies

6.1 Sample Collection. The following items are needed for sample collection:

6.1.1 Sampling Line. Teflon tubing, 6- to 7- mm (¼-in.) ID, to connect the sampling train to the sampling valve.

6.1.2 Impingers. Five midget impingers, each with 30-ml capacity. The internal diameter of the impinger tip must be 1 mm ± 0.05 mm. The impinger tip must be positioned 4 to 6 mm from the bottom of the impinger.

6.1.3 Tubing. Glass or Teflon connecting tubing for the impingers.

6.1.4 Ice Water Bath. To maintain absorbing solution at a low temperature.

6.1.5 Drying Tube. Tube packed with 6- to 16- mesh indicating-type silica gel, or equivalent, to dry the gas sample and protect the meter and pump. If the silica gel has been used previously, dry at 175 °C (350 °F) for 2 hours. New silica gel may be used as received. Alternatively, other types of desiccants (equivalent or better) may be used, subject to approval of the Administrator.

Note: Do not use more than 30 g of silica gel. Silica gel adsorbs gases such as propane from the fuel gas stream, and use of excessive amounts of silica gel could result in errors in the determination of sample volume.

6.1.6 Sampling Valve. Needle valve, or equivalent, to adjust gas flow rate. Stainless steel or other corrosion-resistant material.

6.1.7 Volume Meter. Dry gas meter (DGM), sufficiently accurate to measure the sample volume within 2 percent, calibrated at the selected flow rate (about 1.0 liter/min) and conditions actually encountered during sampling. The meter shall be equipped with a temperature sensor (dial thermometer or equivalent) capable of measuring temperature to within 3 °C (5.4 °F). The gas meter should have a petcock, or equivalent, on the outlet connector which can be closed during the leak-check. Gas volume for one revolution of the meter must not be more than 10 liters.

6.1.8 Rate Meter. Rotameter, or equivalent, to measure flow rates in the range from 0.5 to 2 liters/min (1 to 4 ft^3/hr).

6.1.9 Graduated Cylinder. 25-ml size.

6.1.10 Barometer. Mercury, aneroid, or other barometer capable of measuring

atmospheric pressure to within 2.5 mm Hg (0.1 in. Hg). In many cases, the barometric reading may be obtained from a nearby National Weather Service station, in which case, the station value (which is the absolute barometric pressure) shall be requested and an adjustment for elevation differences between the weather station and the sampling point shall be applied at a rate of minus 2.5 mm Hg (0.1 in Hg) per 30 m (100 ft) elevation increase or vice-versa for elevation decrease.

6.1.11 U-tube Manometer. 0-; to 30-cm water column, for leak-check procedure.

6.1.12 Rubber Squeeze Bulb. To pressurize train for leak-check.

6.1.13 Tee, Pinchclamp, and Connecting Tubing. For leak-check.

6.1.14 Pump. Diaphragm pump, or equivalent. Insert a small surge tank between the pump and rate meter to minimize the pulsation effect of the diaphragm pump on the rate meter. The pump is used for the air purge at the end of the sample run; the pump is not ordinarily used during sampling, because fuel gas streams are usually sufficiently pressurized to force sample gas through the train at the required flow rate. The pump need not be leak-free unless it is used for sampling.

6.1.15 Needle Valve or Critical Orifice. To set air purge flow to 1 liter/min.

6.1.16 Tube Packed with Active Carbon. To filter air during purge.

6.1.17 Volumetric Flask. One 1000-ml.

6.1.18 Volumetric Pipette. One 15-ml.

6.1.19 Pressure-Reduction Regulator. Depending on the sampling stream pressure, a pressure-reduction regulator may be needed to reduce the pressure of the gas stream entering the Teflon sample line to a safe level.

6.1.20 Cold Trap. If condensed water or amine is present in the sample stream, a corrosion-resistant cold trap shall be used immediately after the sample tap. The trap shall not be operated below 0 °C (32 °F) to avoid condensation of C_3 or C_4 hydrocarbons.

6.2 Sample Recovery. The following items are needed for sample recovery:

6.2.1 Sample Container. Iodine flask, glass-stoppered, 500-ml size.

6.2.2 Volumetric Pipette. One 50-ml.

6.2.3 Graduated Cylinders. One each 25- and 250-ml.

6.2.4 Erlenmeyer Flasks. 125-ml.

6.2.5 Wash Bottle.

6.2.6 Volumetric Flasks. Three 1000-ml.

6.3 Sample Analysis. The following items are needed for sample analysis:

6.3.1 Flask. Glass-stoppered iodine flask, 500-ml.

6.3.2 Burette. 50-ml.

6.3.3 Erlenmeyer Flask. 125-ml.

6.3.4 Volumetric Pipettes. One 25-ml; two each 50- and 100-ml.

6.3.5 Volumetric Flasks. One 1000-ml; two 500-ml.

6.3.6 Graduated Cylinders. One each 10- and 100-ml.

7.0 Reagents and Standards

Note: Unless otherwise indicated, it is intended that all reagents conform to the specifications established by the Committee on Analytical Reagents of the American Chemical Society, where such specifications are available. Otherwise, use the best available grade.

7.1 Sample Collection. The following reagents are required for sample collection:

7.1.1 $CdSO_4$ Absorbing Solution. Dissolve 41 g of $3CdSO_48H_2O$ and 15 ml of 0.1 M sulfuric acid in a 1-liter volumetric flask that contains approximately ¾ liter of water. Dilute to volume with deionized, distilled water. Mix thoroughly. The pH should be 3 ± 0.1. Add 10 drops of Dow-Corning Antifoam B. Shake well before use. This solution is stable for at least one month. If Antifoam B is not used, a more labor-intensive sample recovery procedure is required (see Section 11.2).

7.1.2 Hydrogen Peroxide, 3 Percent. Dilute 30 percent H_2O_2 to 3 percent as needed. Prepare fresh daily.

7.1.3 Water. Deionized distilled to conform to ASTM D 1193–77 or 91, Type 3 (incorporated by reference—see § 60.17). The $KMnO_4$ test for oxidizable organic matter may be omitted when high concentrations of organic matter are not expected to be present.

7.2 Sample Recovery. The following reagents are needed for sample recovery:

7.2.1 Water. Same as Section 7.1.3.

7.2.2 Hydrochloric Acid (HCl) Solution, 3 M. Add 240 ml of concentrated HCl (specific gravity 1.19) to 500 ml of water in a 1-liter volumetric flask. Dilute to 1 liter with water. Mix thoroughly.

7.2.3 Iodine (I_2) Solution, 0.1 N. Dissolve 24 g of potassium iodide (KI) in 30 ml of water. Add 12.7 g of resublimed iodine (I_2) to the KI solution. Shake the mixture until the I_2 is completely dissolved. If possible, let the solution stand overnight in the dark. Slowly dilute the solution to 1 liter with water, with swirling. Filter the solution if it is cloudy. Store solution in a brown-glass reagent bottle.

7.2.4 Standard I_2 Solution, 0.01 N. Pipette 100.0 ml of the 0.1 N iodine solution into a 1-liter volumetric flask, and dilute to volume with water. Standardize daily as in Section 10.2.1. This solution must be protected from light. Reagent bottles and flasks must be kept tightly stoppered.

7.3 Sample Analysis. The following reagents and standards are needed for sample analysis:

7.3.1 Water. Same as in Section 7.1.3.

7.3.2 Standard Sodium Thiosulfate Solution, 0.1 N. Dissolve 24.8 g of sodium thiosulfate pentahydrate ($Na_2S_2O_3{\cdot}5H_2O$) or 15.8 g of anhydrous sodium thiosulfate ($Na_2S_2O_3$) in 1 liter of water, and add 0.01 g of anhydrous sodium carbonate (Na_2CO_3) and 0.4 ml of chloroform ($CHCl_3$) to stabilize. Mix thoroughly by shaking or by aerating with nitrogen for approximately 15 minutes, and store in a glass-stoppered, reagent bottle. Standardize as in Section 10.2.2.

7.3.3 Standard Sodium Thiosulfate Solution, 0.01 N. Pipette 50.0 ml of the standard 0.1 N $Na_2S_2O_3$ solution into a volumetric flask, and dilute to 500 ml with water.

Note: A 0.01 N phenylarsine oxide (C_6H_5AsO) solution may be prepared instead of 0.01 N $Na_2S_2O_3$ (see Section 7.3.4).

7.3.4 Standard Phenylarsine Oxide Solution, 0.01 N. Dissolve 1.80 g of (C_6H_5AsO) in 150 ml of 0.3 N sodium hydroxide. After settling, decant 140 ml of this solution into 800 ml of water. Bring the solution to pH 6–7 with 6 N HCl, and dilute to 1 liter with water. Standardize as in Section 10.2.3.

7.3.5 Starch Indicator Solution. Suspend 10 g of soluble starch in 100 ml of water, and add 15 g of potassium hydroxide (KOH) pellets. Stir until dissolved, dilute with 900 ml of water, and let stand for 1 hour. Neutralize the alkali with concentrated HCl, using an indicator paper similar to Alkacid test ribbon, then add 2 ml of glacial acetic acid as a preservative.

Note: Test starch indicator solution for decomposition by titrating with 0.01 N I_2 solution, 4 ml of starch solution in 200 ml of water that contains 1 g of KI. If more than 4 drops of the 0.01 N I_2 solution are required to obtain the blue color, a fresh solution must be prepared.

8.0 Sample Collection, Preservation, Storage, and Transport

8.1 Sampling Train Preparation. Assemble the sampling train as shown in Figure 11–1, connecting the five midget impingers in series. Place 15 ml of 3 percent H_2O_2 solution in the first impinger. Leave the second impinger empty. Place 15 ml of the $CdSO_4$ solution in the third, fourth, and fifth impingers. Place the impinger assembly in an ice water bath container, and place water and crushed ice around the impingers. Add more ice during the run, if needed.

8.2 Leak-Check Procedure.

8.2.1 Connect the rubber bulb and manometer to the first impinger, as shown in Figure 11–1. Close the petcock on the DGM outlet. Pressurize the train to 25 cm water with the bulb, and close off the tubing connected to the rubber bulb. The train must hold 25 cm water pressure with not more than a 1 cm drop in pressure in a 1-minute interval. Stopcock grease is acceptable for sealing ground glass joints.

8.2.2 If the pump is used for sampling, it is recommended, but not required, that the pump be leak-checked separately, either prior to or after the sampling run. To leak-check the pump, proceed as follows: Disconnect the drying tube from the impinger assembly. Place a vacuum gauge at the inlet to either the drying tube or the pump, pull a vacuum of 250 mm Hg (10 in. Hg), plug or pinch off the outlet of the flow meter, and then turn off the pump. The vacuum should remain stable for at least 30 seconds. If performed prior to the sampling run, the pump leak-check should precede the leak-check of the sampling train described immediately above; if performed after the sampling run, the pump leak-check should follow the sampling train leak-check.

8.3 Purge the connecting line between the sampling valve and the first impinger by disconnecting the line from the first impinger, opening the sampling valve, and allowing process gas to flow through the line for one to two minutes. Then, close the sampling valve, and reconnect the line to the impinger train. Open the petcock on the dry gas meter outlet. Record the initial DGM reading.

8.4 Open the sampling valve, and then adjust the valve to obtain a rate of approximately 1 liter/min (0.035 cfm). Maintain a constant (±10 percent) flow rate during the test. Record the DGM temperature.

8.5 Sample for at least 10 minutes. At the end of the sampling time, close the sampling valve, and record the final volume and temperature readings. Conduct a leak-check as described in Section 8.2 above.

8.6 Disconnect the impinger train from the sampling line. Connect the charcoal tube and the pump as shown in Figure 11–1. Purge the train [at a rate of 1 liter/min (0.035 ft^3/min)] with clean ambient air for 15 minutes to ensure that all H_2S is removed from the H_2O_2. For sample recovery, cap the open ends, and remove the impinger train to a clean area that is away from sources of heat. The area should be well lighted, but not exposed to direct sunlight.

8.7 Sample Recovery.

8.7.1 Discard the contents of the H_2O_2 impinger. Carefully rinse with water the contents of the third, fourth, and fifth impingers into a 500-ml iodine flask.

Note: The impingers normally have only a thin film of CdS remaining after a water rinse. If Antifoam B was not used or if significant quantities of yellow CdS remain in the impingers, the alternative recovery procedure in Section 11.2 must be used.

8.7.2 Proceed to Section 11 for the analysis.

9.0 Quality Control

Section	Quality control measure	Effect
8.2, 10.1	Sampling equipment leak-check and calibration	Ensure accurate measurement of sample volume.
11.2	Replicate titrations of blanks	Ensure precision of titration determinations.

10.0 Calibration and Standardization

Note: Maintain a log of all calibrations.

10.1 Calibration. Calibrate the sample collection equipment as follows.

10.1.1 Dry Gas Meter.

10.1.1.1 Initial Calibration. The DGM shall be calibrated before its initial use in the field. Proceed as follows: First, assemble the following components in series: Drying tube, needle valve, pump, rotameter, and DGM. Then, leak-check the metering system as follows: Place a vacuum gauge (at least 760 mm Hg) at the inlet to the drying tube, and pull a vacuum of 250 mm Hg (10 in. Hg); plug or pinch off the outlet of the flow meter, and then turn off the pump. The vacuum shall remain stable for at least 30 seconds. Carefully release the vacuum gauge before releasing the flow meter end. Next, calibrate the DGM (at the sampling flow rate specified by the method) as follows: Connect an appropriately sized wet-test meter (*e.g.,* 1 liter per revolution) to the inlet of the drying tube. Make three independent calibration runs, using at least five revolutions of the DGM per run. Calculate the calibration factor, Y (wet-test meter calibration volume divided by the DGM volume, both volumes adjusted to the same reference temperature and pressure), for each run, and average the results. If any Y value deviates by more than 2 percent from the average, the DGM is unacceptable for use. Otherwise, use the average as the calibration factor for subsequent test runs.

10.1.1.2 Post-Test Calibration Check. After each field test series, conduct a calibration check as in Section 10.1.1.1, above, except for the following two variations: (a) three or more revolutions of the DGM may be used and (b) only two independent runs need be made. If the calibration factor does not deviate by more than 5 percent from the initial calibration factor (determined in Section 10.1.1.1), then the DGM volumes obtained during the test series are acceptable. If the calibration factor deviates by more than 5 percent, recalibrate the DGM as in Section 10.1.1.1, and for the calculations, use the calibration factor (initial or recalibration) that yields the lower gas volume for each test run.

10.1.2 Temperature Sensors. Calibrate against mercury-in-glass thermometers.

10.1.3 Rate Meter. The rate meter need not be calibrated, but should be cleaned and maintained according to the manufacturer's instructions.

10.1.4 Barometer. Calibrate against a mercury barometer.

10.2 Standardization.

10.2.1 Iodine Solution Standardization. Standardize the 0.01 N I_2 solution daily as follows: Pipette 25 ml of the I_2 solution into a 125-ml Erlenmeyer flask. Add 2 ml of 3 M HCl. Titrate rapidly with standard 0.01 N $Na_2S_2O_3$ solution or with 0.01 N C_6H_5AsO until the solution is light yellow, using gentle mixing. Add four drops of starch indicator solution, and continue titrating slowly until the blue color just disappears. Record the volume of $Na_2S_2O_3$ solution used, V_{SI}, or the volume of C_6H_5AsO solution used, V_{AI}, in ml. Repeat until replicate values agree within 0.05 ml. Average the replicate titration values which agree within 0.05 ml, and calculate the exact normality of the I_2 solution using Equation 11–3. Repeat the standardization daily.

10.2.2 Sodium Thiosulfate Solution Standardization. Standardize the 0.1 N $Na_2S_2O_3$ solution as follows: Oven-dry potassium dichromate ($K_2Cr_2O_7$) at 180 to 200 °C (360 to 390 °F). To the nearest milligram, weigh 2 g of the dichromate (W). Transfer the dichromate to a 500–ml volumetric flask, dissolve in water, and dilute to exactly 500 ml. In a 500–ml iodine flask, dissolve approximately 3 g of KI in 45 ml of water, then add 10 ml of 3 M HCl solution. Pipette 50

ml of the dichromate solution into this mixture. Gently swirl the contents of the flask once, and allow it to stand in the dark for 5 minutes. Dilute the solution with 100 to 200 ml of water, washing down the sides of the flask with part of the water. Titrate with 0.1 N $Na_2S_2O_3$ until the solution is light yellow. Add 4 ml of starch indicator and continue titrating slowly to a green end point. Record the volume of $Na_2S_2O_3$ solution used, V_S, in ml. Repeat until replicate values agree within 0.05 ml. Calculate the normality using Equation 11–1. Repeat the standardization each week or after each test series, whichever time is shorter.

10.2.3 Phenylarsine Oxide Solution Standardization. Standardize the 0.01 N C_6H_5AsO (if applicable) as follows: Oven-dry $K_2Cr_2O_7$ at 180 to 200 °C (360 to 390 °F). To the nearest milligram, weigh 2 g of the dichromate (W). Transfer the dichromate to a 500–ml volumetric flask, dissolve in water, and dilute to exactly 500 ml. In a 500–ml iodine flask, dissolve approximately 0.3 g of KI in 45 ml of water, then add 10 ml of 3 M HCl. Pipette 5 ml of the dichromate solution into the iodine flask. Gently swirl the contents of the flask once, and allow it to stand in the dark for 5 minutes. Dilute the solution with 100 to 200 ml of water, washing down the sides of the flask with part of the water. Titrate with 0.01 N C_6H_5AsO until the solution is light yellow. Add 4 ml of starch indicator, and continue titrating slowly to a green end point. Record the volume of C_6H_5AsO used, V_A, in ml. Repeat until replicate analyses agree within 0.05 ml. Calculate the normality using Equation 11–2. Repeat the standardization each week or after each test series, whichever time is shorter.

11.0 Analytical Procedure

Conduct the titration analyses in a clean area away from direct sunlight.

11.1 Pipette exactly 50 ml of 0.01 N I_2 solution into a 125-ml Erlenmeyer flask. Add 10 ml of 3 M HCl to the solution. Quantitatively rinse the acidified I_2 into the iodine flask. Stopper the flask immediately, and shake briefly.

11.2 Use these alternative procedures if Antifoam B was not used or if significant quantities of yellow CdS remain in the impingers. Extract the remaining CdS from the third, fourth, and fifth impingers using the acidified I_2 solution. Immediately after pouring the acidified I_2 into an impinger, stopper it and shake for a few moments, then transfer the liquid to the iodine flask. Do not transfer any rinse portion from one impinger to another; transfer it directly to the iodine flask. Once the acidified I_2 solution has been poured into any glassware containing CdS, the container must be tightly stoppered at all times except when adding more solution, and this must be done as quickly and carefully as possible. After adding any acidified I_2 solution to the iodine flask, allow a few minutes for absorption of the H_2S before adding any further rinses. Repeat the I_2 extraction until all CdS is removed from the impingers. Extract that part of the connecting glassware that contains visible CdS. Quantitatively rinse all the I_2 from the impingers, connectors, and the beaker into the iodine flask using water. Stopper the flask and shake briefly.

11.3 Allow the iodine flask to stand about 30 minutes in the dark for absorption of the H_2S into the I_2, then complete the titration analysis as outlined in Sections 11.5 and 11.6.

Note: Iodine evaporates from acidified I_2 solutions. Samples to which acidified I_2 has been added may not be stored, but must be analyzed in the time schedule stated above.

11.4 Prepare a blank by adding 45 ml of $CdSO_4$ absorbing solution to an iodine flask. Pipette exactly 50 ml of 0.01 N I_2 solution into a 125-ml Erlenmeyer flask. Add 10 ml of 3 M HCl. Stopper the flask, shake briefly, let stand 30 minutes in the dark, and titrate with the samples.

Note: The blank must be handled by exactly the same procedure as that used for the samples.

11.5 Using 0.01 N $Na_2S_2O_3$ solution (or 0.01 N C_6H_5AsO, if applicable), rapidly titrate each sample in an iodine flask using gentle mixing, until solution is light yellow. Add 4 ml of starch indicator solution, and continue titrating slowly until the blue color just disappears. Record the volume of $Na_2S_2O_3$ solution used, V_{TT}, or the volume of C_6H_5AsO solution used, V_{AT}, in ml.

11.6 Titrate the blanks in the same manner as the samples. Run blanks each day until replicate values agree within 0.05 ml. Average the replicate titration values which agree within 0.05 ml.

12.0 Data Analysis and Calculations

Carry out calculations, retaining at least one extra significant figure beyond that of the acquired data. Round off figures only after the final calculation.

12.1 Nomenclature.

C_{H2S} = Concentration of H_2S at standard conditions, mg/dscm.
N_A = Normality of standard C_6H_5AsO solution, g-eq/liter.
N_I = Normality of standard I_2 solution, g-eq/liter.
N_S = Normality of standard (≃0.1 N) $Na_2S_2O_3$ solution, g-eq/liter.
N_T = Normality of standard (≃0.01 N) $Na_2S_2O_3$ solution, assumed to be 0.1 NS, g-eq/liter.
P_{bar} = Barometric pressure at the sampling site, mm Hg.
P_{std} = Standard absolute pressure, 760 mm Hg.
T_m = Average DGM temperature, °K.
T_{std} = Standard absolute temperature, 293 °K.
V_A = Volume of C_6H_5AsO solution used for standardization, ml.
V_{AI} = Volume of standard C_6H_5AsO solution used for titration analysis, ml.
V_I = Volume of standard I_2 solution used for standardization, ml.
V_{IT} = Volume of standard I_2 solution used for titration analysis, normally 50 ml.
V_m = Volume of gas sample at meter conditions, liters.
$V_{m(std)}$ = Volume of gas sample at standard conditions, liters.
V_{SI} = Volume of ''0.1 N $Na_2S_2O_3$ solution used for standardization, ml.
V_T = Volume of standard (≃0.01 N) $Na_2S_2O_3$ solution used in standardizing iodine solution (see Section 10.2.1), ml.
V_{TT} = Volume of standard (~0.01 N) $Na_2S_2O_3$ solution used for titration analysis, ml.
W = Weight of $K_2Cr_2O_7$ used to standardize $Na_2s_2O_3$ or C_6H_5AsO solutions, as applicable (see Sections 10.2.2 and 10.2.3), g.
Y = DGM calibration factor.

12.2 Normality of the Standard (≃0.1 N) Sodium Thiosulfate Solution.

$$N_S = \frac{2.039\ W}{V_S} \qquad \text{Eq. 11-1}$$

Where:
2.039 = Conversion factor
= (6 g-eq I_2/mole $K_2Cr_2O_7$) (1,000 ml/liter)/(294.2 g $K_2Cr_2O_7$/mole) (10 aliquot factor)

12.3 Normality of Standard Phenylarsine Oxide Solution (if applicable).

$$N_A = \frac{0.2039\ W}{V_A} \qquad \text{Eq. 11-2}$$

Where:
0.2039 = Conversion factor.
= (6 g-eq I_2/mole $K_2Cr_2O_7$) (1,000 ml/liter)/(294.2 g $K_2Cr_2O_7$/mole) (100 aliquot factor)

12.4 Normality of Standard Iodine Solution.

$$N_I = \frac{N_T V_T}{V_I} \qquad \text{Eq. 11-3}$$

Note: If C_6H_5AsO is used instead of $Na_2S_2O_3$, replace N_T and V_T in Equation 11–3 with N_A and V_{AS}, respectively (see Sections 10.2.1 and 10.2.3).

12.5 Dry Gas Volume. Correct the sample volume measured by the DGM to standard conditions (20 °C and 760 mm Hg).

$$V_{m(std)} = V_m Y \frac{T_{std}}{T_m} \frac{P_{bar}}{P_{std}} \qquad \text{Eq. 11-4}$$

12.6 Concentration of H_2S. Calculate the concentration of H_2S in the gas stream at standard conditions using Equation 11–5:

$$C_{H_2S} = 17.04 \times 10^3 \frac{\left(V_{IT}N_I - V_{TT}N_T\right)_{sample} - \left(V_{IT}N_I - V_{TT}N_T\right)_{blank}}{V_{m(std)}} \qquad \text{Eq. 11-5}$$

Where:

17.04×10^3 = Conversion factor = (34.07 g/mole H_2S) (1,000 liters/m^3) (1,000mg/g)/(1,000 ml/liter) (2H_2S eq/mole)

Note: If C_6H_5AsO is used instead of NaS_22O_3, replace N_A and V_{AT} in Equation 11–5 with N_A and V_{AT}, respectively (see Sections 11.5 and 10.2.3).

13.0 Method Performance

13.1 Precision. Collaborative testing has shown the intra-laboratory precision to be 2.2 percent and the inter-laboratory precision to be 5 percent.

13.2 Bias. The method bias was shown to be −4.8 percent when only H_2S was present. In the presence of the interferences cited in Section 4.0, the bias was positive at low H_2S concentration and negative at higher concentrations. At 230 mg H_2S/m^3, the level of the compliance standard, the bias was +2.7 percent. Thiols had no effect on the precision.

14.0 Pollution Prevention. [Reserved]

15.0 Waste Management. [Reserved]

16.0 References

1. Determination of Hydrogen Sulfide, Ammoniacal Cadmium Chloride Method. API Method 772–54. In: Manual on Disposal of Refinery Wastes, Vol. V: Sampling and Analysis of Waste Gases and Particulate Matter. American Petroleum Institute, Washington, D.C. 1954.

2. Tentative Method of Determination of Hydrogen Sulfide and Mercaptan Sulfur in Natural Gas. Natural Gas Processors Association, Tulsa, OK. NGPA Publication No. 2265–65. 1965.

3. Knoll, J.D., and M.R. Midgett. Determination of Hydrogen Sulfide in Refinery Fuel Gases. Environmental Monitoring Series, Office of Research and Development, USEPA. Research Triangle Park, NC 27711. EPA 600/4–77–007.

4. Scheil, G.W., and M.C. Sharp. Standardization of Method 11 at a Petroleum Refinery. Midwest Research Institute Draft Report for USEPA. Office of Research and Development. Research Triangle Park, NC 27711. EPA Contract No. 68–02–1098. August 1976. EPA 600/4–77–088a (Volume 1) and EPA 600/4–77–088b (Volume 2).

BILLING CODE 6560–50–P

17.0 Tables, Diagrams, Flowcharts, and Validation Data

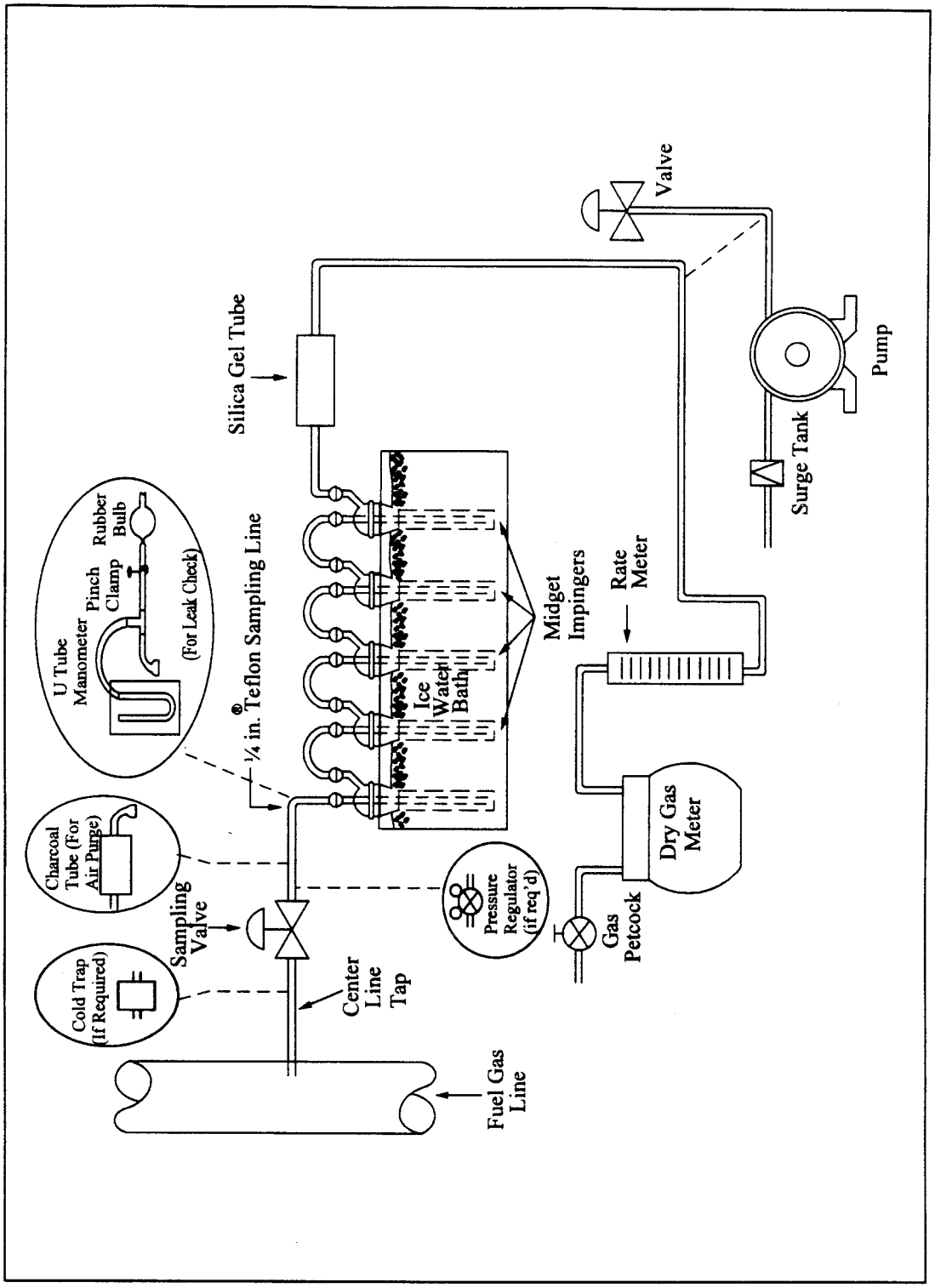

Figure 11-1. Hydrogen Sulfide Sampling Train.

BILLING CODE 6560–50–C

Method 12—Determination of Inorganic Lead Emissions From Stationary Sources

Note: This method does not include all of the specifications (*e.g.*, equipment and supplies) and procedures (*e.g.*, sampling and analytical) essential to its performance. Some material is incorporated by reference from other methods in this part. Therefore, to obtain reliable results, persons using this method should have a thorough knowledge of at least the following additional test methods: Method 1, Method 2, Method 3, and Method 5.

1.0 Scope and Application

1.1 Analytes.

Analyte	CAS No.	Sensitivity
Inorganic Lead Compounds as lead (Pb)	7439–92–1	see Section 13.3.

1.2 Applicability. This method is applicable for the determination of inorganic lead emissions from stationary sources, only as specified in an applicable subpart of the regulations.

1.3 Data Quality Objectives. Adherence to the requirements of this method will enhance the quality of the data obtained from air pollutant sampling methods.

2.0 Summary of Method

2.1 Particulate and gaseous Pb emissions are withdrawn isokinetically from the source and are collected on a filter and in dilute nitric acid. The collected samples are digested in acid solution and are analyzed by atomic absorption spectrophotometry using an air/acetylene flame.

3.0 Definitions. [Reserved]

4.0 Interferences

4.1 Copper. High concentrations of copper may interfere with the analysis of Pb at 217.0 nm. This interference can be avoided by analyzing the samples at 283.3 nm.

4.2 Matrix Effects. Analysis for Pb by flame atomic absorption spectrophotometry is sensitive to the chemical composition and to the physical properties (*e.g.*, viscosity, pH) of the sample. The analytical procedure requires the use of the Method of Standard Additions to check for these matrix effects, and requires sample analysis using the Method of Standard Additions if significant matrix effects are found to be present.

5.0 Safety

5.1 Disclaimer. This method may involve hazardous materials, operations, and equipment. This test method may not address all of the safety problems associated with its use. It is the responsibility of the user of this test method to establish appropriate safety and health practices and to determine the applicability of regulatory limitations prior to performing this test method.

5.2 Corrosive Reagents. The following reagents are hazardous. Personal protective equipment and safe procedures are useful in preventing chemical splashes. If contact occurs, immediately flush with copious amounts of water at least 15 minutes. Remove clothing under shower and decontaminate. Treat residual chemical burn as thermal burn.

5.2.1 Hydrogen Peroxide (H_2O_2). Irritating to eyes, skin, nose, and lungs.

5.2.2 Nitric Acid (HNO_3). Highly corrosive to eyes, skin, nose, and lungs. Vapors cause bronchitis, pneumonia, or edema of lungs. Reaction to inhalation may be delayed as long as 30 hours and still be fatal. Provide ventilation to limit exposure. Strong oxidizer. Hazardous reaction may occur with organic materials such as solvents.

6.0 Equipment and Supplies

6.1 Sample Collection. A schematic of the sampling train used in performing this method is shown in Figure 12–1 in Section 18.0; it is similar to the Method 5 train. The following items are needed for sample collection:

6.1.1 Probe Nozzle, Probe Liner, Pitot Tube, Differential Pressure Gauge, Filter Holder, Filter Heating System, Temperature Sensor, Metering System, Barometer, and Gas Density Determination Equipment. Same as Method 5, Sections 6.1.1.1 through 6.1.1.7, 6.1.1.9, 6.1.2, and 6.1.3, respectively.

6.1.2 Impingers. Four impingers connected in series with leak-free ground glass fittings or any similar leak-free noncontaminating fittings are needed. For the first, third, and fourth impingers, use the Greenburg-Smith design, modified by replacing the tip with a 1.3 cm (½ in.) ID glass tube extending to about 1.3 cm (½ in.) from the bottom of the flask. For the second impinger, use the Greenburg-Smith design with the standard tip.

6.1.3 Temperature Sensor. Place a temperature sensor, capable of measuring temperature to within 1 °C (2 °F) at the outlet of the fourth impinger for monitoring purposes.

6.2 Sample Recovery. The following items are needed for sample recovery:

6.2.1 Probe-Liner and Probe-Nozzle Brushes, Petri Dishes, Graduated Cylinder and/or Balance, Plastic Storage Containers, and Funnel and Rubber Policeman. Same as Method 5, Sections 6.2.1 and 6.2.4 through 6.2.7, respectively.

6.2.2 Wash Bottles. Glass (2).

6.2.3 Sample Storage Containers. Chemically resistant, borosilicate glass bottles, for 0.1 N nitric acid (HNO_3) impinger and probe solutions and washes, 1000-ml. Use screw-cap liners that are either rubber-backed Teflon or leak-free and resistant to chemical attack by 0.1 N HNO_3. (Narrow mouth glass bottles have been found to be less prone to leakage.)

6.2.4 Funnel. Glass, to aid in sample recovery.

6.3 Sample Analysis. The following items are needed for sample analysis:

6.3.1 Atomic Absorption Spectrophotometer. With lead hollow cathode lamp and burner for air/acetylene flame.

6.3.2 Hot Plate.

6.3.3 Erlenmeyer Flasks. 125-ml, 24/40 standard taper.

6.3.4 Membrane Filters. Millipore SCWPO 4700, or equivalent.

6.3.5 Filtration Apparatus. Millipore vacuum filtration unit, or equivalent, for use with the above membrane filter.

6.3.6 Volumetric Flasks. 100-ml, 250-ml, and 1000-ml.

7.0 Reagents and Standards

Note: Unless otherwise indicated, it is intended that all reagents conform to the specifications established by the Committee on Analytical Reagents of the American Chemical Society, where such specifications are available; otherwise, use the best available grade.

7.1 Sample Collection. The following reagents are needed for sample collection:

7.1.1 Filter. Gelman Spectro Grade, Reeve Angel 934 AH, MSA 1106 BH, all with lot assay for Pb, or other high-purity glass fiber filters, without organic binder, exhibiting at least 99.95 percent efficiency (<0.05 percent penetration) on 0.3 micron dioctyl phthalate smoke particles. Conduct the filter efficiency test using ASTM D 2986–71, 78, or 95a (incorporated by reference—see § 60.17) or use test data from the supplier's quality control program.

7.1.2 Silica Gel, Crushed Ice, and Stopcock Grease. Same as Method 5,

Sections 7.1.2, 7.1.4, and 7.1.5, respectively.

7.1.3 Water. Deionized distilled, to conform to ASTM D 1193–77 or 91, Type 3 (incorporated by reference—see § 60.17). If high concentrations of organic matter are not expected to be present, the potassium permanganate test for oxidizable organic matter may be omitted.

7.1.4 Nitric Acid, 0.1 N. Dilute 6.5 ml of concentrated HNO_3 to 1 liter with water. (It may be desirable to run blanks before field use to eliminate a high blank on test samples.)

7.2 Sample Recovery. 0.1 N HNO_3 (Same as in Section 7.1.4 above).

7.3 Sample Analysis. The following reagents and standards are needed for sample analysis:

7.3.1 Water. Same as in Section 7.1.3.

7.3.2 Nitric Acid, Concentrated.

7.3.3 Nitric Acid, 50 Percent (v/v). Dilute 500 ml of concentrated HNO_3 to 1 liter with water.

7.3.4 Stock Lead Standard Solution, 1000 µg Pb/ml. Dissolve 0.1598 g of lead nitrate [$Pb(NO_3)_2$] in about 60 ml water, add 2 ml concentrated HNO_3, and dilute to 100 ml with water.

7.3.5 Working Lead Standards. Pipet 0.0, 1.0, 2.0, 3.0, 4.0, and 5.0 ml of the stock lead standard solution (Section 7.3.4) into 250-ml volumetric flasks. Add 5 ml of concentrated HNO_3 to each flask, and dilute to volume with water. These working standards contain 0.0, 4.0, 8.0, 12.0, 16.0, and 20.0 µg Pb/ml, respectively. Prepare, as needed, additional standards at other concentrations in a similar manner.

7.3.6 Air. Suitable quality for atomic absorption spectrophotometry.

7.3.7 Acetylene. Suitable quality for atomic absorption spectrophotometry.

7.3.8 Hydrogen Peroxide, 3 Percent (v/v). Dilute 10 ml of 30 percent H_2O_2 to 100 ml with water.

8.0 Sample Collection, Preservation, Storage, and Transport

8.1 Pretest Preparation. Follow the same general procedure given in Method 5, Section 8.1, except that the filter need not be weighed.

8.2 Preliminary Determinations. Follow the same general procedure given in Method 5, Section 8.2.

8.3 Preparation of Sampling Train. Follow the same general procedure given in Method 5, Section 8.3, except place 100 ml of 0.1 N HNO_3 (instead of water) in each of the first two impingers. As in Method 5, leave the third impinger empty and transfer approximately 200 to 300 g of preweighed silica gel from its container to the fourth impinger. Set up the train as shown in Figure 12–1.

8.4 Leak-Check Procedures. Same as Method 5, Section 8.4.

8.5 Sampling Train Operation. Same as Method 5, Section 8.5.

8.6 Calculation of Percent Isokinetic. Same as Method 5, Section 8.6.

8.7 Sample Recovery. Same as Method 5, Sections 8.7.1 through 8.7.6.1, with the addition of the following:

8.7.1 Container No. 2 (Probe).

8.7.1.1 Taking care that dust on the outside of the probe or other exterior surfaces does not get into the sample, quantitatively recover sample matter and any condensate from the probe nozzle, probe fitting, probe liner, and front half of the filter holder by washing these components with 0.1 N HNO_3 and placing the wash into a glass sample storage container. Measure and record (to the nearest 2 ml) the total amount of 0.1 N HNO_3 used for these rinses. Perform the 0.1 N HNO_3 rinses as follows:

8.7.1.2 Carefully remove the probe nozzle, and rinse the inside surfaces with 0.1 N HNO_3 from a wash bottle while brushing with a stainless steel, Nylon-bristle brush. Brush until the 0.1 N HNO_3 rinse shows no visible particles, then make a final rinse of the inside surface with 0.1 N HNO_3.

8.7.1.3 Brush and rinse with 0.1 N HNO_3 the inside parts of the Swagelok fitting in a similar way until no visible particles remain.

8.7.1.4 Rinse the probe liner with 0.1 N HNO_3. While rotating the probe so that all inside surfaces will be rinsed with 0.1 N HNO_3, tilt the probe, and squirt 0.1 N HNO_3 into its upper end. Let the 0.1 N HNO_3 drain from the lower end into the sample container. A glass funnel may be used to aid in transferring liquid washes to the container. Follow the rinse with a probe brush. Hold the probe in an inclined position, squirt 0.1 N HNO_3 into the upper end of the probe as the probe brush is being pushed with a twisting action through the probe; hold the sample container underneath the lower end of the probe, and catch any 0.1 N HNO_3 and sample matter that is brushed from the probe. Run the brush through the probe three times or more until no visible sample matter is carried out with the 0.1 N HNO_3 and none remains on the probe liner on visual inspection. With stainless steel or other metal probes, run the brush through in the above prescribed manner at least six times, since metal probes have small crevices in which sample matter can be entrapped. Rinse the brush with 0.1 N HNO_3, and quantitatively collect these washings in the sample container. After the brushing, make a final rinse of the probe as described above.

8.7.1.5 It is recommended that two people clean the probe to minimize loss of sample. Between sampling runs, keep brushes clean and protected from contamination.

8.7.1.6 After ensuring that all joints are wiped clean of silicone grease, brush and rinse with 0.1 N HNO_3 the inside of the from half of the filter holder. Brush and rinse each surface three times or more, if needed, to remove visible sample matter. Make a final rinse of the brush and filter holder. After all 0.1 N HNO_3 washings and sample matter are collected in the sample container, tighten the lid on the sample container so that the fluid will not leak out when it is shipped to the laboratory. Mark the height of the fluid level to determine whether leakage occurs during transport. Label the container to identify its contents clearly.

8.7.2 Container No. 3 (Silica Gel). Note the color of the indicating silica gel to determine if it has been completely spent, and make a notation of its condition. Transfer the silica gel from the fourth impinger to the original container, and seal. A funnel may be used to pour the silica gel from the impinger and a rubber policeman may be used to remove the silica gel from the impinger. It is not necessary to remove the small amount of particles that may adhere to the walls and are difficult to remove. Since the gain in weight is to be used for moisture calculations, do not use any water or other liquids to transfer the silica gel. If a balance is available in the field, follow the procedure for Container No. 3 in Section 11.4.2.

8.7.3 Container No. 4 (Impingers). Due to the large quantity of liquid involved, the impinger solutions may be placed in several containers. Clean each of the first three impingers and connecting glassware in the following manner:

8.7.3.1. Wipe the impinger ball joints free of silicone grease, and cap the joints.

8.7.3.2. Rotate and agitate each impinger, so that the impinger contents might serve as a rinse solution.

8.7.3.3. Transfer the contents of the impingers to a 500-ml graduated cylinder. Remove the outlet ball joint cap, and drain the contents through this opening. Do not separate the impinger parts (inner and outer tubes) while transferring their contents to the cylinder. Measure the liquid volume to within 2 ml. Alternatively, determine the weight of the liquid to within 0.5 g. Record in the log the volume or weight of the liquid present, along with a

notation of any color or film observed in the impinger catch. The liquid volume or weight is needed, along with the silica gel data, to calculate the stack gas moisture content (see Method 5, Figure 5–6).

8.7.3.4. Transfer the contents to Container No. 4.

Note: In Sections 8.7.3.5 and 8.7.3.6, measure and record the total amount of 0.1 N HNO_3 used for rinsing.

8.7.3.5. Pour approximately 30 ml of 0.1 N HNO_3 into each of the first three impingers and agitate the impingers. Drain the 0.1 N HNO_3 through the outlet arm of each impinger into Container No. 4. Repeat this operation a second time; inspect the impingers for any abnormal conditions.

8.7.3.6. Wipe the ball joints of the glassware connecting the impingers free of silicone grease and rinse each piece of glassware twice with 0.1 N HNO_3; transfer this rinse into Container No. 4. Do not rinse or brush the glass-fritted filter support. Mark the height of the fluid level to determine whether leakage occurs during transport. Label the container to identify its contents clearly.

8.8 Blanks.

8.8.1 Nitric Acid. Save 200 ml of the 0.1 N HNO_3 used for sampling and cleanup as a blank. Take the solution directly from the bottle being used and place into a glass sample container labeled ''0.1 N HNO_3 blank.''

8.8.2 Filter. Save two filters from each lot of filters used in sampling. Place these filters in a container labeled ''filter blank.''

9.0 Quality Control

9.1 Miscellaneous Quality Control Measures.

Section	Quality control measure	Effect
8.4, 10.1	Sampling equipment leak-checks and calibration.	Ensure accuracy and precision of sampling measurements.
10.2	Spectrophotometer calibration	Ensure linearity of spectrophotometer response to standards.
11.5	Check for matrix effects	Eliminate matrix effects.

9.2 Volume Metering System Checks. Same as Method 5, Section 9.2.

10.0 Calibration and Standardizations

Note: Maintain a laboratory log of all calibrations.

10.1 Sampling Equipment. Same as Method 5, Section 10.0.

10.2 Spectrophotometer.

10.2.1 Measure the absorbance of the standard solutions using the instrument settings recommended by the spectrophotometer manufacturer. Repeat until good agreement (±3 percent) is obtained between two consecutive readings. Plot the absorbance (y-axis) versus concentration in µg Pb/ml (x-axis). Draw or compute a straight line through the linear portion of the curve. Do not force the calibration curve through zero, but if the curve does not pass through the origin or at least lie closer to the origin than ±0.003 absorbance units, check for incorrectly prepared standards and for curvature in the calibration curve.

10.2.2 To determine stability of the calibration curve, run a blank and a standard after every five samples, and recalibrate as necessary.

11.0 Analytical Procedures

11.1 Sample Loss Check. Prior to analysis, check the liquid level in Containers Number 2 and Number 4. Note on the analytical data sheet whether leakage occurred during transport. If a noticeable amount of leakage occurred, either void the sample or take steps, subject to the approval of the Administrator, to adjust the final results.

11.2 Sample Preparation.

11.2.1 Container No. 1 (Filter). Cut the filter into strips and transfer the strips and all loose particulate matter into a 125-ml Erlenmeyer flask. Rinse the petri dish with 10 ml of 50 percent HNO_3 to ensure a quantitative transfer, and add to the flask.

Note: If the total volume required in Section 11.2.3 is expected to exceed 80 ml, use a 250-ml flask in place of the 125-ml flask.

11.2.2 Containers No. 2 and No. 4 (Probe and Impingers). Combine the contents of Containers No. 2 and No. 4, and evaporate to dryness on a hot plate.

11.2.3 Sample Extraction for Lead.

11.2.3.1 Based on the approximate stack gas particulate concentration and the total volume of stack gas sampled, estimate the total weight of particulate sample collected. Next, transfer the residue from Containers No. 2 and No. 4 to the 125-ml Erlenmeyer flask that contains the sampling filter using a rubber policeman and 10 ml of 50 percent HNO_3 for every 100 mg of sample collected in the train or a minimum of 30 ml of 50 percent HNO_3, whichever is larger.

11.2.3.2 Place the Erlenmeyer flask on a hot plate, and heat with periodic stirring for 30 minutes at a temperature just below boiling. If the sample volume falls below 15 ml, add more 50 percent HNO_3. Add 10 ml of 3 percent H_2O_2, and continue heating for 10 minutes. Add 50 ml of hot (80 °C, 176 °F) water, and heat for 20 minutes. Remove the flask from the hot plate, and allow to cool. Filter the sample through a Millipore membrane filter, or equivalent, and transfer the filtrate to a 250-ml volumetric flask. Dilute to volume with water.

11.2.4 Filter Blank. Cut each filter into strips, and place each filter in a separate 125-ml Erlenmeyer flask. Add 15 ml of 50 percent HNO_3, and treat as described in Section 11.2.3 using 10 ml of 3 percent H_2O_2 and 50 ml of hot water. Filter and dilute to a total volume of 100 ml using water.

11.2.5 Nitric Acid Blank, 0.1 N. Take the entire 200 ml of 0.1 N HNO_3 to dryness on a steam bath, add 15 ml of 50 percent HNO_3, and treat as described in Section 11.2.3 using 10 ml of 3 percent H_20_2 and 50 ml of hot water. Dilute to a total volume of 100 ml using water.

11.3 Spectrophotometer Preparation. Turn on the power; set the wavelength, slit width, and lamp current; and adjust the background corrector as instructed by the manufacturer's manual for the particular atomic absorption spectrophotometer. Adjust the burner and flame characteristics as necessary.

11.4 Analysis.

11.4.1 Lead Determination. Calibrate the spectrophotometer as outlined in Section 10.2, and determine the absorbance for each source sample, the filter blank, and 0.1 N HNO_3 blank. Analyze each sample three times in this manner. Make appropriate dilutions, as needed, to bring all sample Pb concentrations into the linear absorbance range of the spectrophotometer. Because instruments vary between manufacturers, no detailed operating instructions will be given here. Instead, the instructions provided with the particular instrument should be followed. If the Pb concentration of a sample is at the low end of the calibration curve and high accuracy is required, the sample can be taken to dryness on a hot plate and the residue dissolved in the appropriate volume of water to bring it into the optimum range of the calibration curve.

11.4.2 Container No. 3 (Silica Gel). This step may be conducted in the field. Weigh the spent silica gel (or silica gel plus impinger) to the nearest 0.5 g; record this weight.

11.5 Check for Matrix Effects. Use the Method of Standard Additions as follows to check at least one sample from each source for matrix effects on the Pb results:

11.5.1 Add or spike an equal volume of standard solution to an aliquot of the sample solution.

11.5.2 Measure the absorbance of the resulting solution and the absorbance of an aliquot of unspiked sample.

11.5.3 Calculate the Pb concentration C_m in µg/ml of the sample solution using Equation 12–1 in Section 12.5.

Volume corrections will not be required if the solutions as analyzed have been made to the same final volume. Therefore, C_m and C_a represent Pb concentration before dilutions.

Method of Standard Additions procedures described on pages 9–4 and 9–5 of the section entitled ''General Information'' of the Perkin Elmer Corporation Atomic Absorption Spectrophotometry Manual, Number 303–0152 (Reference 1 in Section 17.0) may also be used. In any event, if the results of the Method of Standard Additions procedure used on the single source sample do not agree to within ±5 percent of the value obtained by the routine atomic absorption analysis, then reanalyze all samples from the source using the Method of Standard Additions procedure.

12.0 Data Analysis and Calculations

12.1 Nomenclature.

A_m = Absorbance of the sample solution.
A_n = Cross-sectional area of nozzle, m^2 (ft^2).
A_t = Absorbance of the spiked sample solution.
B_{ws} = Water in the gas stream, proportion by volume.
C_a = Lead concentration in standard solution, µg/ml.
C_m = Lead concentration in sample solution analyzed during check for matrix effects, µg/ml.
C_s = Lead concentration in stack gas, dry basis, converted to standard conditions, mg/dscm (gr/dscf).
I = Percent of isokinetic sampling.
L_1 = Individual leakage rate observed during the leak-check conducted prior to the first component change, m^3/min (ft^3/min)
L_a = Maximum acceptable leakage rate for either a pretest leak-check or for a leak-check following a component change; equal to 0.00057 m^3/min (0.020 cfm) or 4 percent of the average sampling rate, whichever is less.
L_i = Individual leakage rate observed during the leak-check conducted prior to the ''ith'' component change (i = 1, 2, 3 * * * n), m^3/min (cfm).
L_p = Leakage rate observed during the post-test leak-check, m^3/min (cfm).
m_t = Total weight of lead collected in the sample, µg.
M_w = Molecular weight of water, 18.0 g/g-mole (18.0 lb/lb-mole).
P_{bar} = Barometric pressure at the sampling site, mm Hg (in. Hg).
P_s = Absolute stack gas pressure, mm Hg (in. Hg).
P_{std} = Standard absolute pressure, 760 mm Hg (29.92 in. Hg).
R = Ideal gas constant, 0.06236 [(mm Hg) (m^3)]/[(°K) (g-mole)] {21.85 [(in. Hg) (ft^3)]/[(°R) (lb-mole)]}.
T_m = Absolute average dry gas meter temperature (see Figure 5–3 of Method 5), °K (°R).
T_{std} = Standard absolute temperature, 293 °K (528 °R).
v_s = Stack gas velocity, m/sec (ft/sec).
V_m = Volume of gas sample as measured by the dry gas meter, dry basis, m^3 (ft^3).
$V_{m(std)}$ = Volume of gas sample as measured by the dry gas meter, corrected to standard conditions, m^3 (ft^3).
$V_{w(std)}$ = Volume of water vapor collected in the sampling train, corrected to standard conditions, m^3 (ft^3).
Y = Dry gas meter calibration factor.
ΔH = Average pressure differential across the orifice meter (see Figure 5–3 of Method 5), mm H_2O (in. H_2O).
θ = Total sampling time, min.
θ_1 = Sampling time interval, from the beginning of a run until the first component change, min.
θ_i = Sampling time interval, between two successive component changes, beginning with the interval between the first and second changes, min.
θ_p = Sampling time interval, from the final (n^{th}) component change until the end of the sampling run, min.
ρ_w = Density of water, 0.9982 g/ml (0.002201 lb/ml).

12.2 Average Dry Gas Meter Temperatures (T_m) and Average Orifice Pressure Drop (ΔH). See data sheet (Figure 5–3 of Method 5).

12.3 Dry Gas Volume, Volume of Water Vapor, and Moisture Content. Using data obtained in this test, calculate $V_{m(std)}$, $V_{w(std)}$, and B_{ws} according to the procedures outlined in Method 5, Sections 12.3 through 12.5.

12.4 Total Lead in Source Sample. For each source sample, correct the average absorbance for the contribution of the filter blank and the 0.1 N HNO_3 blank. Use the calibration curve and this corrected absorbance to determine the Pb concentration in the sample aspirated into the spectrophotometer. Calculate the total Pb content m_t (in µg) in the original source sample; correct for all the dilutions that were made to bring the Pb concentration of the sample into the linear range of the spectrophotometer.

12.5 Sample Lead Concentration. Calculate the Pb concentration of the sample using the following equation:

$$C_m = C_a \frac{A_m}{A_t - A_m} \qquad \text{Eq. 12-1}$$

12.6 Lead Concentration. Calculate the stack gas Pb concentration C_s using Equation 12–2:

$$C_s = K_3 \frac{m_t}{V_{m(std)}} \qquad \text{Eq. 12-2}$$

Where:

K_3 = 0.001 mg/µg for metric units.
= 1.54×10^{-5} gr/µg for English units

12.7 Stack Gas Velocity and Volumetric Flow Rate. Calculate the average stack gas velocity and volumetric flow rate using data obtained in this method and the equations in Sections 12.2 and 12.3 of Method 2.

12.8 Isokinetic Variation. Same as Method 5, Section 12.11.

13.0 Method Performance

13.1 Precision. The within-laboratory precision, as measured by the coefficient of variation, ranges from 0.2 to 9.5 percent relative to a run-mean concentration. These values were based on tests conducted at a gray iron foundry, a lead storage battery manufacturing plant, a secondary lead smelter, and a lead recovery furnace of an alkyl lead manufacturing plant. The concentrations encountered during these tests ranged from 0.61 to 123.3 mg Pb/m^3.

13.2 Analytical Range. For a minimum analytical accuracy of ±10 percent, the lower limit of the range is 100 µg. The upper limit can be extended considerably by dilution.

13.3 Analytical Sensitivity. Typical sensitivities for a 1-percent change in absorption (0.0044 absorbance units) are 0.2 and 0.5 µg Pb/ml for the 217.0 and 283.3 nm lines, respectively.

14.0 Pollution Prevention. [Reserved]

15.0 Waste Management. [Reserved]

16.0 Alternative Procedures

16.1 Simultaneous Determination of Particulate and Lead Emissions. Method

5 may be used to simultaneously determine Pb provided: (1) acetone is used to remove particulate from the probe and inside of the filter holder as specified by Method 5, (2) 0.1 N HNO_3 is used in the impingers, (3) a glass fiber filter with a low Pb background is used, and (4) the entire train contents, including the impingers, are treated and analyzed for Pb as described in Sections 8.0 and 11.0 of this method.

16.2 Filter Location. A filter may be used between the third and fourth impingers provided the filter is included in the analysis for Pb.

16.3 In-Stack Filter. An in-stack filter may be used provided: (1) A glass-lined probe and at least two impingers, each containing 100 ml of 0.1 N HNO_3 after the in-stack filter, are used and (2) the probe and impinger contents are recovered and analyzed for Pb. Recover sample from the nozzle with acetone if a particulate analysis is to be made.

17.0 References

Same as Method 5, Section 17.0, References 2, 3, 4, 5, and 7, with the addition of the following:

1. Perkin Elmer Corporation. Analytical Methods for Atomic Absorption Spectrophotometry. Norwalk, Connecticut. September 1976.

2. American Society for Testing and Materials. Annual Book of ASTM Standards, Part 31: Water, Atmospheric Analysis. Philadelphia, PA 1974. p. 40–42.

3. Kelin, R., and C. Hach. Standard Additions—Uses and Limitations in Spectrophotometric Analysis. Amer. Lab. *9*:21–27. 1977.

4. Mitchell, W.J., and M.R. Midgett. Determining Inorganic and Alkyl Lead Emissions from Stationary Sources. U.S. Environmental Protection Agency. Emission Monitoring and Support Laboratory. Research Triangle Park, NC. (Presented at National APCA Meeting, Houston. June 26, 1978).

BILLING CODE 6560–50–P

18.0 Tables, Diagrams, Flowcharts, and Validation Data

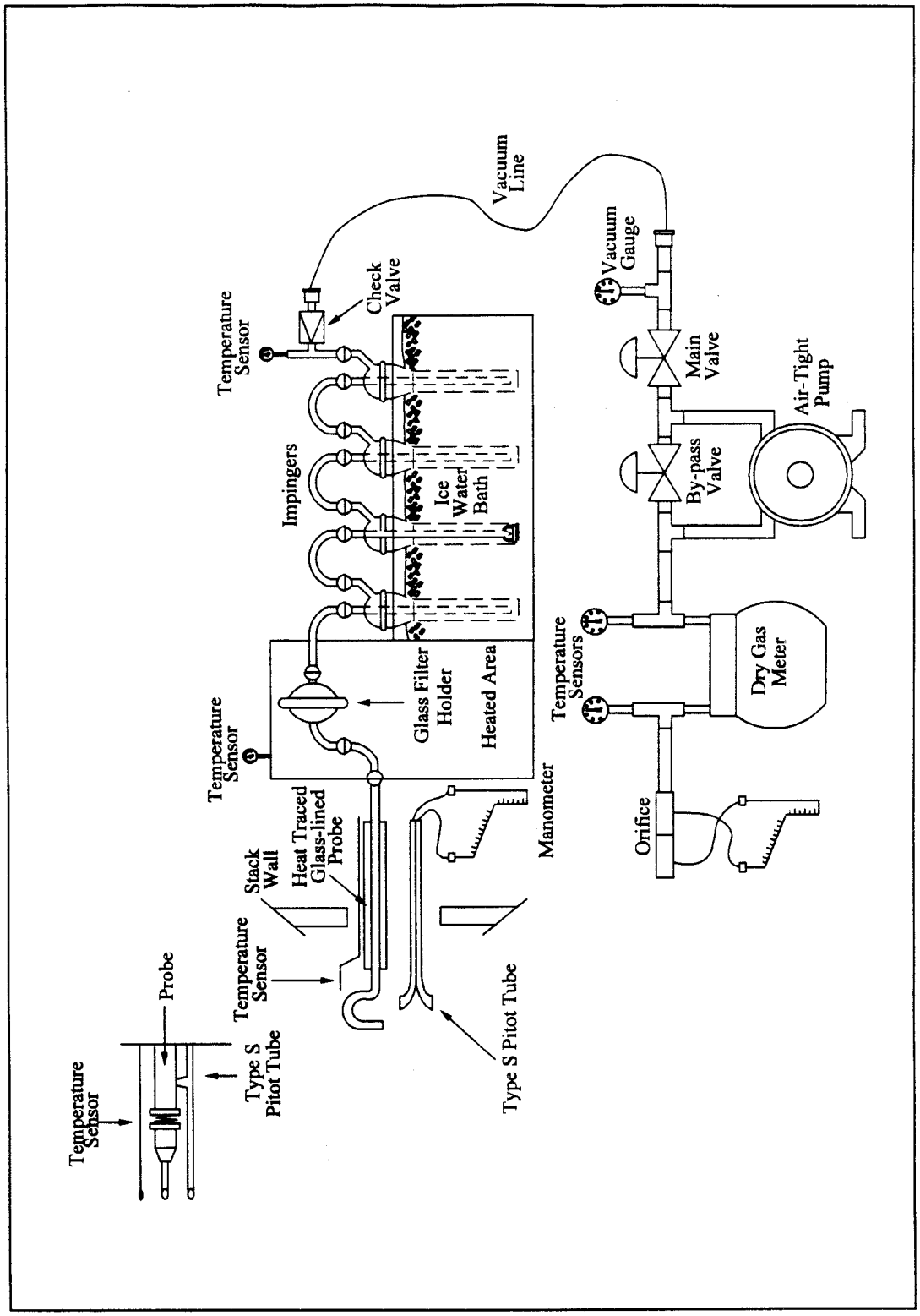

Figure 12-1. Inorganic Lead Sampling Train.

BILLING CODE 6560–50–C

Method 13A—Determination of Total Fluoride Emissions From Stationary Sources (Spadns Zirconium Lake Method)

Note: This method does not include all of the specifications (*e.g.*, equipment and supplies) and procedures (*e.g.*, sampling and analytical) essential to its performance. Some material is incorporated by reference from other methods in this part. Therefore, to obtain reliable results, persons using this method should have a thorough knowledge of at least the following additional test methods: Method 1, Method 2, Method 3, and Method 5.

1.0 Scope and Application

1.1 Analytes.

Analyte	CAS No.	Sensitivity
Total fluorides as Fluorine	7782–41–4	Not determined.

1.2 Applicability. This method is applicable for the determination of fluoride (F^-) emissions from sources as specified in the regulations. It does not measure fluorocarbons, such as Freons.

1.3 Data Quality Objectives. Adherence to the requirements of this method will enhance the quality of the data obtained from air pollutant sampling methods.

2.0 Summary

Gaseous and particulate F^- are withdrawn isokinetically from the source and collected in water and on a filter. The total F^- is then determined by the SPADNS Zirconium Lake Colorimetric method.

3.0 Definitions [Reserved]

4.0 Interferences

4.1 Chloride. Large quantities of chloride will interfere with the analysis, but this interference can be prevented by adding silver sulfate into the distillation flask (see Section 11.3). If chloride ion is present, it may be easier to use the specific ion electrode method of analysis (Method 13B).

4.2 Grease. Grease on sample-exposed surfaces may cause low F^- results due to adsorption.

5.0 Safety

5.1 Disclaimer. This method may involve hazardous materials, operations, and equipment. This test method may not address all of the safety problems associated with its use. It is the responsibility of the user of this test method to establish appropriate safety and health practices and to determine the applicability of regulatory limitations prior to performing this test method.

5.2 Corrosive Reagents. The following reagents are hazardous. Personal protective equipment and safe procedures are useful in preventing chemical splashes. If contact occurs, immediately flush with copious amounts of water at least 15 minutes. Remove clothing under shower and decontaminate. Treat residual chemical burn as thermal burn.

5.2.1 Hydrochloric Acid (HCl). Highly toxic. Vapors are highly irritating to eyes, skin, nose, and lungs, causing severe damage. May cause bronchitis, pneumonia, or edema of lungs. Exposure to concentrations of 0.13 to 0.2 percent can be lethal in minutes. Will react with metals, producing hydrogen.

5.2.2 Sodium Hydroxide (NaOH). Causes severe damage to eye tissues and to skin. Inhalation causes irritation to nose, throat, and lungs. Reacts exothermically with limited amounts of water.

5.2.3 Sulfuric Acid (H_2SO_4). Rapidly destructive to body tissue. Will cause third degree burns. Eye damage may result in blindness. Inhalation may be fatal from spasm of the larynx, usually within 30 minutes. May cause lung tissue damage with edema. 1 mg/m^3 for 8 hours will cause lung damage or, in higher concentrations, death. Provide ventilation to limit inhalation. Reacts violently with metals and organics.

6.0 Equipment and Supplies

6.1 Sample Collection. A schematic of the sampling train used in performing this method is shown in Figure 13A–1; it is similar to the Method 5 sampling train except that the filter position is interchangeable. The sampling train consists of the following components:

6.1.1 Probe Nozzle, Pitot Tube, Differential Pressure Gauge, Filter Heating System, Temperature Sensor, Metering System, Barometer, and Gas Density Determination Equipment. Same as Method 5, Sections 6.1.1.1, 6.1.1.3 through 6.1.1.7, 6.1.1.9, 6.1.2, and 6.1.3, respectively. The filter heating system and temperature sensor are needed only when moisture condensation is a problem.

6.1.2 Probe Liner. Borosilicate glass or 316 stainless steel. When the filter is located immediately after the probe, a probe heating system may be used to prevent filter plugging resulting from moisture condensation, but the temperature in the probe shall not be allowed to exceed 120 ± 14 °C (248 ± 25 °F).

6.1.3 Filter Holder. With positive seal against leakage from the outside or around the filter. If the filter is located between the probe and first impinger, use borosilicate glass or stainless steel with a 20-mesh stainless steel screen filter support and a silicone rubber gasket; do not use a glass frit or a sintered metal filter support. If the filter is located between the third and fourth impingers, borosilicate glass with a glass frit filter support and a silicone rubber gasket may be used. Other materials of construction may be used, subject to the approval of the Administrator.

6.1.4 Impingers. Four impingers connected as shown in Figure 13A–1 with ground-glass (or equivalent), vacuum-tight fittings. For the first, third, and fourth impingers, use the Greenburg-Smith design, modified by replacing the tip with a 1.3–cm (½ in.) ID glass tube extending to 1.3 cm (½ in.) from the bottom of the flask. For the second impinger, use a Greenburg-Smith impinger with the standard tip. Modifications (*e.g.*, flexible connections between the impingers or materials other than glass) may be used, subject to the approval of the Administrator. Place a temperature sensor, capable of measuring temperature to within 1 °C (2 °F), at the outlet of the fourth impinger for monitoring purposes.

6.2 Sample Recovery. The following items are needed for sample recovery:

6.2.1 Probe-liner and Probe-Nozzle Brushes, Wash Bottles, Graduated Cylinder and/or Balance, Plastic Storage Containers, Funnel and Rubber Policeman, and Funnel. Same as Method 5, Sections 6.2.1, 6.2.2 and 6.2.5 to 6.2.8, respectively.

6.2.2 Sample Storage Container. Wide-mouth, high-density polyethylene bottles for impinger water samples, 1 liter.

6.3 Sample Preparation and Analysis. The following items are needed for sample preparation and analysis:

6.3.1 Distillation Apparatus. Glass distillation apparatus assembled as shown in Figure 13A–2.

6.3.2 Bunsen Burner.

6.3.3 Electric Muffle Furnace. Capable of heating to 600 °C (1100 °F).

6.3.4 Crucibles. Nickel, 75- to 100-ml.

6.3.5 Beakers. 500-ml and 1500-ml.

6.3.6 Volumetric Flasks. 50-ml.

6.3.7 Erlenmeyer Flasks or Plastic Bottles. 500-ml.

6.3.8 Constant Temperature Bath. Capable of maintaining a constant temperature of ±1.0 °C at room temperature conditions.

6.3.9 Balance. 300-g capacity, to measure to ±0.5 g.

6.3.10 Spectrophotometer. Instrument that measures absorbance at 570 nm and provides at least a 1-cm light path.

6.3.11 Spectrophotometer Cells. 1-cm path length.

7.0 Reagents and Standards

Unless otherwise indicated, all reagents are to conform to the specifications established by the Committee on Analytical Reagents of the American Chemical Society, where such specifications are available. Otherwise, use the best available grade.

7.1 Sample Collection. The following reagents are needed for sample collection:

7.1.1 Filters.

7.1.1.1 If the filter is located between the third and fourth impingers, use a Whatman No. 1 filter, or equivalent, sized to fit the filter holder.

7.1.1.2 If the filter is located between the probe and first impinger, use any suitable medium (*e.g.*, paper, organic membrane) that can withstand prolonged exposure to temperatures up to 135 °C (275 °F), and has at least 95 percent collection efficiency (<5 percent penetration) for 0.3 µm dioctyl phthalate smoke particles. Conduct the filter efficiency test before the test series, using ASTM D 2986–71, 78, or 95a (incorporated by reference—see § 60.17), or use test data from the supplier's quality control program. The filter must also have a low F^- blank value (<0.015 mg F^-/cm^2 of filter area). Before the test series, determine the average F^- blank value of at least three filters (from the lot to be used for sampling) using the applicable procedures described in Sections 8.3 and 8.4 of this method. In general, glass fiber filters have high and/or variable F^- blank values, and will not be acceptable for use.

7.1.2 Water. Deionized distilled, to conform to ASTM D 1193–77 or 91, Type 3 (incorporated by reference—see § 60.17). If high concentrations of organic matter are not expected to be present, the potassium permanganate test for oxidizable organic matter may be deleted.

7.1.3 Silica Gel, Crushed Ice, and Stopcock Grease. Same as Method 5, Sections 7.1.2, 7.1.4, and 7.1.5, respectively.

7.2 Sample Recovery. Water, as described in Section 7.1.2, is needed for sample recovery.

7.3 Sample Preparation and Analysis. The following reagents and standards are needed for sample preparation and analysis:

7.3.1 Calcium Oxide (CaO). Certified grade containing 0.005 percent F^- or less.

7.3.2 Phenolphthalein Indicator. Dissolve 0.1 g of phenolphthalein in a mixture of 50 ml of 90 percent ethanol and 50 ml of water.

7.3.3 Silver Sulfate (Ag_2SO_4).

7.3.4 Sodium Hydroxide (NaOH), Pellets.

7.3.5 Sulfuric Acid (H_2SO_4), Concentrated.

7.3.6 Sulfuric Acid, 25 Percent (v/v). Mix 1 part of concentrated H_2SO_4 with 3 parts of water.

7.3.7 Filters. Whatman No. 541, or equivalent.

7.3.8 Hydrochloric Acid (HCl), Concentrated.

7.3.9 Water. Same as in Section 7.1.2.

7.3.10 Fluoride Standard Solution, 0.01 mg F^-/ml. Dry approximately 0.5 g of sodium fluoride (NaF) in an oven at 110 °C (230 °F) for at least 2 hours. Dissolve 0.2210 g of NaF in 1 liter of water. Dilute 100 ml of this solution to 1 liter with water.

7.3.11 SPADNS Solution [4,5 Dihydroxyl-3-(p-Sulfophenylazo)-2,7-Naphthalene-Disulfonic Acid Trisodium Salt]. Dissolve 0.960 ± 0.010 g of SPADNS reagent in 500 ml water. If stored in a well-sealed bottle protected from the sunlight, this solution is stable for at least 1 month.

7.3.12 Spectrophotometer Zero Reference Solution. Add 10 ml of SPADNS solution to 100 ml water, and acidify with a solution prepared by diluting 7 ml of concentrated HCl to 10 ml with deionized, distilled water. Prepare daily.

7.3.13 SPADNS Mixed Reagent. Dissolve 0.135 ± 0.005 g of zirconyl chloride octahydrate ($ZrOCl_2$ $8H_2O$) in 25 ml of water. Add 350 ml of concentrated HCl, and dilute to 500 ml with deionized, distilled water. Mix equal volumes of this solution and SPADNS solution to form a single reagent. This reagent is stable for at least 2 months.

8.0 Sample Collection, Preservation, Storage, and Transport

8.1 Pretest Preparation. Follow the general procedure given in Method 5, Section 8.1, except that the filter need not be weighed.

8.2 Preliminary Determinations. Follow the general procedure given in Method 5, Section 8.2, except that the nozzle size must be selected such that isokinetic sampling rates below 28 liters/min (1.0 cfm) can be maintained.

8.3 Preparation of Sampling Train. Follow the general procedure given in Method 5, Section 8.3, except for the following variation: Assemble the train as shown in Figure 13A–1 with the filter between the third and fourth impingers. Alternatively, if a 20-mesh stainless steel screen is used for the filter support, the filter may be placed between the probe and first impinger. A filter heating system to prevent moisture condensation may be used, but shall not allow the temperature to exceed 120 ± 14 °C (248 ± 25 °F). Record the filter location on the data sheet (see Section 8.5).

8.4 Leak-Check Procedures. Follow the leak-check procedures given in Method 5, Section 8.4.

8.5 Sampling Train Operation. Follow the general procedure given in Method 5, Section 8.5, keeping the filter and probe temperatures (if applicable) at 120 ± 14 °C (248 ± 25 °F) and isokinetic sampling rates below 28 liters/min (1.0 cfm). For each run, record the data required on a data sheet such as the one shown in Method 5, Figure 5–3.

8.6 Sample Recovery. Proper cleanup procedure begins as soon as the probe is removed from the stack at the end of the sampling period. Allow the probe to cool.

8.6.1 When the probe can be safely handled, wipe off all external particulate matter near the tip of the probe nozzle, and place a cap over it to keep from losing part of the sample. Do not cap off the probe tip tightly while the sampling train is cooling down as this would create a vacuum in the filter holder, thus drawing water from the impingers into the filter holder.

8.6.2 Before moving the sample train to the cleanup site, remove the probe from the sample train, wipe off any silicone grease, and cap the open outlet of the probe. Be careful not to lose any condensate that might be present. Remove the filter assembly, wipe off any silicone grease from the filter holder inlet, and cap this inlet. Remove the umbilical cord from the last impinger, and cap the impinger. After wiping off any silicone grease, cap off the filter holder outlet and any open impinger inlets and outlets. Ground-glass stoppers, plastic caps, or serum caps may be used to close these openings.

8.6.3 Transfer the probe and filter-impinger assembly to the cleanup area.

This area should be clean and protected from the wind so that the chances of contaminating or losing the sample will be minimized.

8.6.4 Inspect the train prior to and during disassembly, and note any abnormal conditions. Treat the samples as follows:

8.6.4.1 Container No. 1 (Probe, Filter, and Impinger Catches).

8.6.4.1.1 Using a graduated cylinder, measure to the nearest ml, and record the volume of the water in the first three impingers; include any condensate in the probe in this determination. Transfer the impinger water from the graduated cylinder into a polyethylene container. Add the filter to this container. (The filter may be handled separately using procedures subject to the Administrator's approval.) Taking care that dust on the outside of the probe or other exterior surfaces does not get into the sample, clean all sample-exposed surfaces (including the probe nozzle, probe fitting, probe liner, first three impingers, impinger connectors, and filter holder) with water. Use less than 500 ml for the entire wash. Add the washings to the sample container. Perform the water rinses as follows:

8.6.4.1.2 Carefully remove the probe nozzle and rinse the inside surface with water from a wash bottle. Brush with a Nylon bristle brush, and rinse until the rinse shows no visible particles, after which make a final rinse of the inside surface. Brush and rinse the inside parts of the Swagelok fitting with water in a similar way.

8.6.4.1.3 Rinse the probe liner with water. While squirting the water into the upper end of the probe, tilt and rotate the probe so that all inside surfaces will be wetted with water. Let the water drain from the lower end into the sample container. A funnel (glass or polyethylene) may be used to aid in transferring the liquid washes to the container. Follow the rinse with a probe brush. Hold the probe in an inclined position, and squirt water into the upper end as the probe brush is being pushed with a twisting action through the probe. Hold the sample container underneath the lower end of the probe, and catch any water and particulate matter that is brushed from the probe. Run the brush through the probe three times or more. With stainless steel or other metal probes, run the brush through in the above prescribed manner at least six times since metal probes have small crevices in which particulate matter can be entrapped. Rinse the brush with water, and quantitatively collect these washings in the sample container. After the brushing, make a final rinse of the probe as described above.

8.6.4.1.4 It is recommended that two people clean the probe to minimize sample losses. Between sampling runs, keep brushes clean and protected from contamination.

8.6.4.1.5 Rinse the inside surface of each of the first three impingers (and connecting glassware) three separate times. Use a small portion of water for each rinse, and brush each sample-exposed surface with a Nylon bristle brush, to ensure recovery of fine particulate matter. Make a final rinse of each surface and of the brush.

8.6.4.1.6 After ensuring that all joints have been wiped clean of the silicone grease, brush and rinse with water the inside of the filter holder (front-half only, if filter is positioned between the third and fourth impingers). Brush and rinse each surface three times or more if needed. Make a final rinse of the brush and filter holder.

8.6.4.1.7 After all water washings and particulate matter have been collected in the sample container, tighten the lid so that water will not leak out when it is shipped to the laboratory. Mark the height of the fluid level to transport. Label the container clearly to identify its contents.

8.6.4.2 Container No. 2 (Sample Blank). Prepare a blank by placing an unused filter in a polyethylene container and adding a volume of water equal to the total volume in Container No. 1. Process the blank in the same manner as for Container No. 1.

8.6.4.3 Container No. 3 (Silica Gel). Note the color of the indicating silica gel to determine whether it has been completely spent, and make a notation of its condition. Transfer the silica gel from the fourth impinger to its original container, and seal. A funnel may be used to pour the silica gel and a rubber policeman to remove the silica gel from the impinger. It is not necessary to remove the small amount of dust particles that may adhere to the impinger wall and are difficult to remove. Since the gain in weight is to be used for moisture calculations, do not use any water or other liquids to transfer the silica gel. If a balance is available in the field, follow the analytical procedure for Container No. 3 in Section 11.4.2.

9.0 Quality Control

9.1 Miscellaneous Quality Control Measures.

Section	Quality control measure	Effect
8.4, 10.1	Sampling equipment leak-check and calibration	Ensure accurate measurement of stack gas flow rate and sample volume.
10.2	Spectrophotometer calibration	Evaluate analytical technique, preparation of standards.
11.3.3	Interference/recovery efficiency check during distillation.	Minimize negative effects of used acid.

9.2 Volume Metering System Checks. Same as Method 5, Section 9.2.

10.0 Calibration and Standardization

Note: Maintain a laboratory log of all calibrations.

10.1 Sampling Equipment. Calibrate the probe nozzle, pitot tube, metering system, probe heater, temperature sensors, and barometer according to the procedures outlined in Method 5, Sections 10.1 through 10.6. Conduct the leak-check of the metering system according to the procedures outlined in Method 5, Section 8.4.1.

10.2 Spectrophotometer.

10.2.1 Prepare the blank standard by adding 10 ml of SPADNS mixed reagent to 50 ml of water.

10.2.2 Accurately prepare a series of standards from the 0.01 mg F^-/ml standard fluoride solution (Section 7.3.10) by diluting 0, 2, 4, 6, 8, 10, 12, and 14 ml to 100 ml with deionized, distilled water. Pipet 50 ml from each solution, and transfer each to a separate 100-ml beaker. Then add 10 ml of SPADNS mixed reagent (Section 7.3.13) to each. These standards will contain 0, 10, 20, 30, 40, 50, 60, and 70 μg F^- (0 to 1.4 μg/ml), respectively.

10.2.3 After mixing, place the blank and calibration standards in a constant temperature bath for 30 minutes before reading the absorbance with the spectrophotometer. Adjust all samples to this same temperature before analyzing.

10.2.4 With the spectrophotometer at 570 nm, use the blank standard to set

the absorbance to zero. Determine the absorbance of the standards.

10.2.5 Prepare a calibration curve by plotting μg F^-/50 ml versus absorbance on linear graph paper. Prepare the standard curve initially and thereafter whenever the SPADNS mixed reagent is newly made. Also, run a calibration standard with each set of samples and, if it differs from the calibration curve by more than ±2 percent, prepare a new standard curve.

11.0 Analytical Procedures

11.1 Sample Loss Check. Note the liquid levels in Containers No. 1 and No. 2, determine whether leakage occurred during transport, and note this finding on the analytical data sheet. If noticeable leakage has occurred, either void the sample or use methods, subject to the approval of the Administrator, to correct the final results.

11.2 Sample Preparation. Treat the contents of each sample container as described below:

11.2.1 Container No. 1 (Probe, Filter, and Impinger Catches). Filter this container's contents, including the sampling filter, through Whatman No. 541 filter paper, or equivalent, into a 1500-ml beaker.

11.2.1.1 If the filtrate volume exceeds 900 ml, make the filtrate basic (red to phenolphthalein) with NaOH, and evaporate to less than 900 ml.

11.2.1.2 Place the filtered material (including sampling filter) in a nickel crucible, add a few ml of water, and macerate the filters with a glass rod.

11.2.1.2.1 Add 100 mg CaO to the crucible, and mix the contents thoroughly to form a slurry. Add two drops of phenolphthalein indicator. Place the crucible in a hood under infrared lamps or on a hot plate at low heat. Evaporate the water completely. During the evaporation of the water, keep the slurry basic (red to phenolphthalein) to avoid loss of F^-. If the indicator turns colorless (acidic) during the evaporation, add CaO until the color turns red again.

11.2.1.2.2 After evaporation of the water, place the crucible on a hot plate under a hood, and slowly increase the temperature until the Whatman No. 541 and sampling filters char. It may take several hours to char the filters completely.

11.2.1.2.3 Place the crucible in a cold muffle furnace. Gradually (to prevent smoking) increase the temperature to 600 °C (1100 °F), and maintain this temperature until the contents are reduced to an ash. Remove the crucible from the furnace, and allow to cool.

11.2.1.2.4 Add approximately 4 g of crushed NaOH to the crucible, and mix. Return the crucible to the muffle furnace, and fuse the sample for 10 minutes at 600 °C.

11.2.1.2.5 Remove the sample from the furnace, and cool to ambient temperature. Using several rinsings of warm water, transfer the contents of the crucible to the beaker containing the filtrate. To ensure complete sample removal, rinse finally with two 20-ml portions of 25 percent H_2SO_4, and carefully add to the beaker. Mix well, and transfer to a 1-liter volumetric flask. Dilute to volume with water, and mix thoroughly. Allow any undissolved solids to settle.

11.2.2 Container No. 2 (Sample Blank). Treat in the same manner as described in Section 11.2.1 above.

11.2.3 Adjustment of Acid/Water Ratio in Distillation Flask. Place 400 ml of water in the distillation flask, and add 200 ml of concentrated H_2SO_4. Add some soft glass beads and several small pieces of broken glass tubing, and assemble the apparatus as shown in Figure 13A–2. Heat the flask until it reaches a temperature of 175 °C (347 °F) to adjust the acid/water ratio for subsequent distillations. Discard the distillate.

Caution: Use a protective shield when carrying out this procedure. Observe standard precautions when mixing H_2SO_4 with water. Slowly add the acid to the flask with constant swirling.

11.3 Distillation.

11.3.1 Cool the contents of the distillation flask to below 80 °C (180 °F). Pipet an aliquot of sample containing less than 10.0 mg F^- directly into the distillation flask, and add water to make a total volume of 220 ml added to the distillation flask. (To estimate the appropriate aliquot size, select an aliquot of the solution, and treat as described in Section 11.4.1. This will be an approximation of the F^- content because of possible interfering ions.)

Note: If the sample contains chloride, add 5 mg of Ag_2SO_4 to the flask for every mg of chloride.

11.3.2 Place a 250-ml volumetric flask at the condenser exit. Heat the flask as rapidly as possible with a Bunsen burner, and collect all the distillate up to 175 °C (347 °F). During heatup, play the burner flame up and down the side of the flask to prevent bumping. Conduct the distillation as rapidly as possible (15 minutes or less). Slow distillations have been found to produce low F^- recoveries. Be careful not to exceed 175 °C (347 °F) to avoid causing H_2SO_4 to distill over. If F^- distillation in the mg range is to be followed by a distillation in the fractional mg range, add 220 ml of water and distill it over as in the acid adjustment step to remove residual F^- from the distillation system.

11.3.3 The acid in the distillation flask may be used until there is carry-over of interferences or poor F^- recovery. Check for interference and for recovery efficiency every tenth distillation using a water blank and a standard solution. Change the acid whenever the F^- recovery is less than 90 percent or the blank value exceeds 0.1 μg/ml.

11.4 Sample Analysis.

11.4.1 Containers No. 1 and No. 2.

11.4.1.1 After distilling suitable aliquots from Containers No. 1 and No. 2 according to Section 11.3, dilute the distillate in the volumetric flasks to exactly 250 ml with water, and mix thoroughly. Pipet a suitable aliquot of each sample distillate (containing 10 to 40 μg F^-/ml) into a beaker, and dilute to 50 ml with water. Use the same aliquot size for the blank. Add 10 ml of SPADNS mixed reagent (Section 7.3.13), and mix thoroughly.

11.4.1.2 After mixing, place the sample in a constant-temperature bath containing the standard solutions for 30 minutes before reading the absorbance on the spectrophotometer.

Note: After the sample and colorimetric reagent are mixed, the color formed is stable for approximately 2 hours. Also, a 3 °C (5.4 °F) temperature difference between the sample and standard solutions produces an error of approximately 0.005 mg F^-/liter. To avoid this error, the absorbencies of the sample and standard solutions must be measured at the same temperature.

11.4.1.3 Set the spectrophotometer to zero absorbance at 570 nm with the zero reference solution (Section 7.3.12), and check the spectrophotometer calibration with the standard solution (Section 7.3.10). Determine the absorbance of the samples, and determine the concentration from the calibration curve. If the concentration does not fall within the range of the calibration curve, repeat the procedure using a different size aliquot.

11.4.2 Container No. 3 (Silica Gel). Weigh the spent silica gel (or silica gel plus impinger) to the nearest 0.5 g using a balance. This step may be conducted in the field.

12.0 Data Analysis and Calculations

Carry out calculations, retaining at least one extra significant figure beyond that of the acquired data. Round off figures after final calculation. Other forms of the equations may be used, provided that they yield equivalent results.

12.1 Nomenclature.

A_d = Aliquot of distillate taken for color development, ml.

A_t = Aliquot of total sample added to still, ml.

B_{ws} = Water vapor in the gas stream, portion by volume.

C_s = Concentration of F^- in stack gas, mg/dscm (gr/dscf).

F_c = F^- concentration from the calibration curve, µg.

F_t = Total F^- in sample, mg.

T_m = Absolute average dry gas meter (DGM) temperature (see Figure 5–3 of Method 5), °K (°R).

T_s = Absolute average stack gas temperature (see Figure 5–3 of Method 5), °K (°R).

V_d = Volume of distillate as diluted, ml.

$V_{m(std)}$ = Volume of gas sample as measured by DGM at standard conditions, dscm (dscf).

V_t = Total volume of F^- sample, after final dilution, ml.

$V_{w(std)}$ = Volume of water vapor in the gas sample at standard conditions, scm (scf)

12.2 Average DGM Temperature and Average Orifice Pressure Drop (see Figure 5–3 of Method 5).

12.3 Dry Gas Volume. Calculate $V_{m(std)}$, and adjust for leakage, if necessary, using Equation 5–1 of Method 5.

12.4 Volume of Water Vapor and Moisture Content. Calculate $V_{w(std)}$ and B_{ws} from the data obtained in this method. Use Equations 5–2 and 5–3 of Method 5.

12.5 Total Fluoride in Sample. Calculate the amount of F^- in the sample using the following equation:

$$F_t = \frac{K\,V_t V_d F_c}{A_t A_d} \qquad \text{Eq. 13A-1}$$

Where:

$K = 10^{-3}$ mg/µg (metric units)

$= 1.54 \times 10^{-5}$ gr/µg (English units)

12.6 Fluoride Concentration in Stack Gas. Determine the F^- concentration in the stack gas using the following equation:

$$C_f = \frac{F_t}{V_{m(std)}} \qquad \text{Eq. 13A-2}$$

12.7 Isokinetic Variation. Same as Method 5, Section 12.11.

13.0 Method Performance

The following estimates are based on a collaborative test done at a primary aluminum smelter. In the test, six laboratories each sampled the stack simultaneously using two sampling trains for a total of 12 samples per sampling run. Fluoride concentrations encountered during the test ranged from 0.1 to 1.4 mg F^-/m^3.

13.1 Precision. The intra- and inter-laboratory standard deviations, which include sampling and analysis errors, were 0.044 mg F^-/m^3 with 60 degrees of freedom and 0.064 mg F^-/m^3 with five degrees of freedom, respectively.

13.2 Bias. The collaborative test did not find any bias in the analytical method.

13.3 Range. The range of this method is 0 to 1.4 µg F_-/ml.

14.0 Pollution Prevention. [Reserved]

15.0 Waste Management. [Reserved]

16.0 Alternative Procedures

16.1 Compliance with ASTM D 3270–73T, 80, 91, or 95 (incorporated by reference—see § 60.17) ''Analysis of Fluoride Content of the Atmosphere and Plant Tissues (Semiautomated Method) is an acceptable alternative for the requirements specified in Sections 11.2, 11.3, and 11.4.1 when applied to suitable aliquots of Containers 1 and 2 samples.

17.0 References

1. Bellack, Ervin. Simplified Fluoride Distillation Method. J. of the American Water Works Association. 50:5306. 1958.

2. Mitchell, W.J., J.C. Suggs, and F.J. Bergman. Collaborative Study of EPA Method 13A and Method 13B. Publication No. EPA–300/4–77–050. U.S. Environmental Protection Agency, Research Triangle Park, NC. December 1977.

3. Mitchell, W.J., and M.R. Midgett. Adequacy of Sampling Trains and Analytical Procedures Used for Fluoride. Atm. Environ. 10:865–872. 1976.

BILLING CODE 6560–50–P

18.0 Tables, Diagrams, Flowcharts, and Validation Data

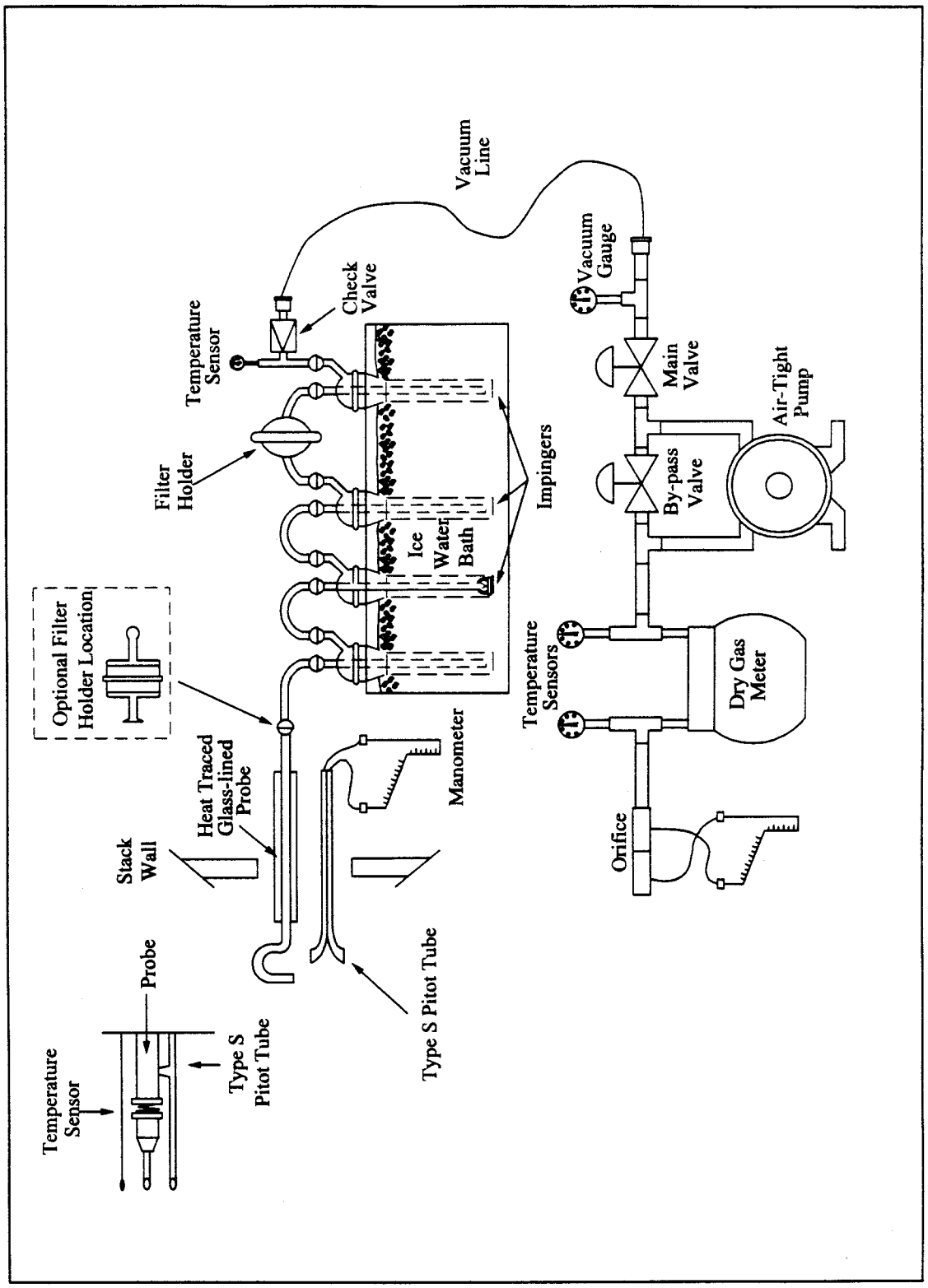

Figure 13A-1. Fluoride Sampling Train.

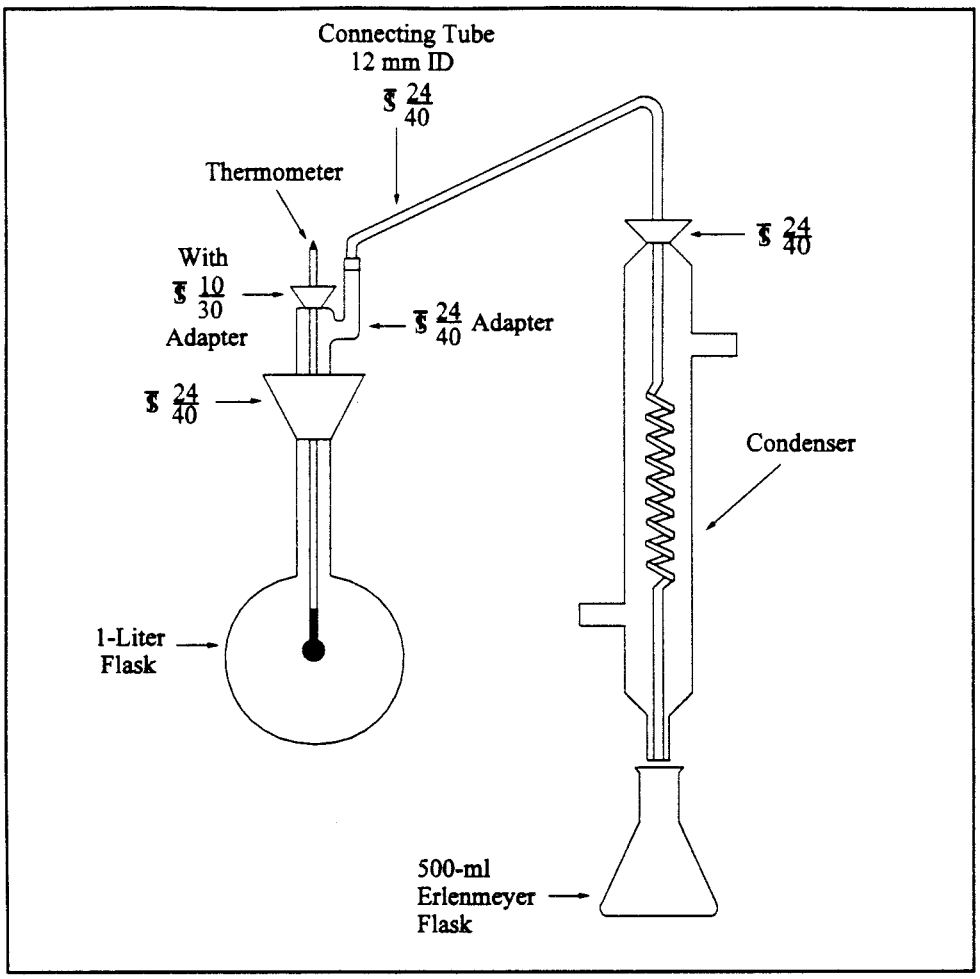

Figure 13A-2. Fluoride Distillation Apparatus.

BILLING CODE 6560–50–C

Method 13B—Determination of Total Fluoride Emissions From Stationary Sources (Specific Ion Electrode Method)

Note: This method does not include all of the specifications (*e.g.*, equipment and supplies) and procedures (*e.g.*, sampling and analytical) essential to its performance. Some material is incorporated by reference from other methods in this part. Therefore, to obtain reliable results, persons using this method should have a thorough knowledge of at least the following additional test methods: Method 1, Method 2, Method 3, Method 5, and Method 13A.

1.0 Scope and Application

1.1 Analytes.

Analyte	CAS No.	Sensitivity
Total fluorides as Fluorine	7782–41–4	Not determined.

1.2 Applicability. This method is applicable for the determination of fluoride (F^-) emissions from sources as specified in the regulations. It does not measure fluorocarbons, such as Freons.

1.3 Data Quality Objectives. Adherence to the requirements of this method will enhance the quality of the data obtained from air pollutant sampling methods.

2.0 Summary

Gaseous and particulate F^- are withdrawn isokinetically from the source and collected in water and on a filter. The total F^- is then determined by the specific ion electrode method.

3.0 Definitions. [Reserved]

4.0 Interferences

Grease on sample-exposed surfaces may cause low F^- results because of adsorption.

5.0 Safety

5.1 Disclaimer. This method may involve hazardous materials, operations, and equipment. This test method does not purport to address all of the safety problems associated with its use. It is the responsibility of the user of this test method to establish appropriate safety and health practices and to determine the applicability of regulatory limitations prior to performing this test method.

5.2 Corrosive Reagents. The following reagents are hazardous. Personal protective equipment and safe procedures are useful in preventing chemical splashes. If contact occurs, immediately flush with copious amounts of water at least 15 minutes. Remove clothing under shower and

decontaminate. Treat residual chemical burn as thermal burn.

5.2.1 Sodium Hydroxide (NaOH). Causes severe damage to eye tissues and to skin. Inhalation causes irritation to nose, throat, and lungs. Reacts exothermically with limited amounts of water.

5.2.2 Sulfuric Acid (H_2SO_4). Rapidly destructive to body tissue. Will cause third degree burns. Eye damage may result in blindness. Inhalation may be fatal from spasm of the larynx, usually within 30 minutes. May cause lung tissue damage with edema. 1 mg/m^3 for 8 hours will cause lung damage or, in higher concentrations, death. Provide ventilation to limit inhalation. Reacts violently with metals and organics.

6.0 Equipment and Supplies

6.1 Sample Collection and Sample Recovery. Same as Method 13A, Sections 6.1 and 6.2, respectively.

6.2 Sample Preparation and Analysis. The following items are required for sample preparation and analysis:

6.2.1 Distillation Apparatus, Bunsen Burner, Electric Muffle Furnace, Crucibles, Beakers, Volumetric Flasks, Erlenmeyer Flasks or Plastic Bottles, Constant Temperature Bath, and Balance. Same as Method 13A, Sections 6.3.1 to 6.3.9, respectively.

6.2.2 Fluoride Ion Activity Sensing Electrode.

6.2.3 Reference Electrode. Single junction, sleeve type.

6.2.4 Electrometer. A pH meter with millivolt-scale capable of ±0.1-mv resolution, or a specific ion meter made specifically for specific ion electrode use.

6.2.5 Magnetic Stirrer and Tetrafluoroethylene (TFE) Fluorocarbon-Coated Stirring Bars.

6.2.6 Beakers. Polyethylene, 100-ml.

7.0 Reagents and Standards

Unless otherwise indicated, all reagents are to conform to the specifications established by the Committee on Analytical Reagents of the American Chemical Society, where such specifications are available. Otherwise, use the best available grade.

7.1 Sample Collection and Sample Recovery. Same as Method 13A, Sections 7.1 and 7.2, respectively.

7.2 Sample Preparation and Analysis. The following reagents and standards are required for sample analysis:

7.2.1 Calcium Oxide (CaO). Certified grade containing 0.005 percent F^- or less.

7.2.2 Phenolphthalein Indicator. Dissolve 0.1 g phenolphthalein in a mixture of 50 ml of 90 percent ethanol and 50 ml water.

7.2.3 Sodium Hydroxide (NaOH), Pellets.

7.2.4 Sulfuric Acid (H_2SO_4), Concentrated.

7.2.5 Filters. Whatman No. 541, or equivalent.

7.2.6 Water. Same as Section 7.1.2 of Method 13A.

7.2.7 Sodium Hydroxide, 5 M. Dissolve 20 g of NaOH in 100 ml of water.

7.2.8 Sulfuric Acid, 25 Percent (v/v). Mix 1 part of concentrated H_2SO_4 with 3 parts of water.

7.2.9 Total Ionic Strength Adjustment Buffer (TISAB). Place approximately 500 ml of water in a 1-liter beaker. Add 57 ml of glacial acetic acid, 58 g of sodium chloride, and 4 g of cyclohexylene dinitrilo tetraacetic acid. Stir to dissolve. Place the beaker in a water bath and cool to 20 °C (68 °F). Slowly add 5 M NaOH to the solution, measuring the pH continuously with a calibrated pH/reference electrode pair, until the pH is 5.3. Pour into a 1-liter volumetric flask, and dilute to volume with deionized, distilled water. Commercially prepared TISAB may be substituted for the above.

7.2.10 Fluoride Standard Solution, 0.1 M. Oven dry approximately 10 g of sodium fluoride (NaF) for a minimum of 2 hours at 110 °C (230 °F), and store in a desiccator. Then add 4.2 g of NaF to a 1-liter volumetric flask, and add enough water to dissolve. Dilute to volume with water.

8.0 Sample Collection, Preservation, Storage, and Transport

Same as Method 13A, Section 8.0.

9.0 Quality Control

9.1 Miscellaneous Quality Control Measures.

Section	Quality control measure	Effect
8.0, 10.1	Sampling equipment leak-check and calibration	Ensure accurate measurement of stack gas flow rate and sample volume.
10.2	Fluoride electrode	Evaluate analytical technique, preparation of standards.
11.1	Interference/recovery efficiency-check during distillation.	Minimize negative effects of used acid.

9.2 Volume Metering System Checks. Same as Method 5, Section 9.2.

10.0 Calibration and Standardizations

Note: Maintain a laboratory log of all calibrations.

10.1 Sampling Equipment. Same as Method 13A, Section 10.1.

10.2 Fluoride Electrode. Prepare fluoride standardizing solutions by serial dilution of the 0.1 M fluoride standard solution. Pipet 10 ml of 0.1 M fluoride standard solution into a 100-ml volumetric flask, and make up to the mark with water for a 10^{-2} M standard solution. Use 10 ml of 10^{-2} M solution to make a 10^{-3} M solution in the same manner. Repeat the dilution procedure, and make 10^{-4} and 10^{-5} M solutions.

10.2.1 Pipet 50 ml of each standard into a separate beaker. Add 50 ml of TISAB to each beaker. Place the electrode in the most dilute standard solution. When a steady millivolt reading is obtained, plot the value on the linear axis of semilog graph paper versus concentration on the log axis. Plot the nominal value for concentration of the standard on the log axis, (*e.g.*, when 50 ml of 10^{-2} M standard is diluted with 50 ml of TISAB, the concentration is still designated ''10^{-2} M'').

10.2.2 Between measurements, soak the fluoride sensing electrode in water for 30 seconds, and then remove and blot dry. Analyze the standards going from dilute to concentrated standards. A straight-line calibration curve will be obtained, with nominal concentrations of 10^{-4}, 10^{-3}, 10^{-2}, 10^{-1} fluoride molarity on the log axis plotted versus electrode potential (in mv) on the linear scale. Some electrodes may be slightly nonlinear between 10^{-5} and 10^{-4} M. If this occurs, use additional standards between these two concentrations.

10.2.3 Calibrate the fluoride electrode daily, and check it hourly. Prepare fresh fluoride standardizing solutions daily (10^{-2} M or less). Store fluoride standardizing solutions in polyethylene or polypropylene containers.

Note: Certain specific ion meters have been designed specifically for fluoride electrode use and give a direct readout of fluoride ion concentration. These meters may be used in lieu of calibration curves for fluoride

measurements over a narrow concentration ranges. Calibrate the meter according to the manufacturer's instructions.

11.0 Analytical Procedures

11.1 Sample Loss Check, Sample Preparation, and Distillation. Same as Method 13A, Sections 11.1 through 11.3, except that the **Note** following Section 11.3.1 is not applicable.

11.2 Analysis.

11.2.1 Containers No. 1 and No. 2. Distill suitable aliquots from Containers No. 1 and No. 2. Dilute the distillate in the volumetric flasks to exactly 250 ml with water, and mix thoroughly. Pipet a 25-ml aliquot from each of the distillate into separate beakers. Add an equal volume of TISAB, and mix. The sample should be at the same temperature as the calibration standards when measurements are made. If ambient laboratory temperature fluctuates more than ±2 °C from the temperature at which the calibration standards were measured, condition samples and standards in a constant-temperature bath before measurement. Stir the sample with a magnetic stirrer during measurement to minimize electrode response time. If the stirrer generates enough heat to change solution temperature, place a piece of temperature insulating material, such as cork, between the stirrer and the beaker. Hold dilute samples (below 10^{-4} M fluoride ion content) in polyethylene beakers during measurement.

11.2.2 Insert the fluoride and reference electrodes into the solution. When a steady millivolt reading is obtained, record it. This may take several minutes. Determine concentration from the calibration curve. Between electrode measurements, rinse the electrode with water.

11.2.3 Container No. 3 (Silica Gel). Same as in Method 13A, Section 11.4.2.

12.0 Data Analysis and Calculations

Carry out calculations, retaining at least one extra significant figure beyond that of the acquired data. Round off figures after final calculation.

12.1 Nomenclature. Same as Method 13A, Section 12.1, with the addition of the following:

M = F^- concentration from calibration curve, molarity.

12.2 Average DGM Temperature and Average Orifice Pressure Drop, Dry Gas Volume, Volume of Water Vapor and Moisture Content, Fluoride Concentration in Stack Gas, and Isokinetic Variation. Same as Method 13A, Sections 12.2 to 12.4, 12.6, and 12.7, respectively.

12.3 Total Fluoride in Sample. Calculate the amount of F^- in the sample using Equation 13B–1:

$$F_t = \frac{K V_t V_d M}{A_t} \qquad \text{Eq. 13B-1}$$

Where:

K = 19 [(mg·l)/(mole·ml)] (metric units)
= 0.292 [(gr·l)/(mole·ml)] (English units)

13.0 Method Performance

The following estimates are based on a collaborative test done at a primary aluminum smelter. In the test, six laboratories each sampled the stack simultaneously using two sampling trains for a total of 12 samples per sampling run. Fluoride concentrations encountered during the test ranged from 0.1 to 1.4 mg F^-/m^3.

13.1 Precision. The intra-laboratory and inter-laboratory standard deviations, which include sampling and analysis errors, are 0.037 mg F^-/m^3 with 60 degrees of freedom and 0.056 mg F^-/m^3 with five degrees of freedom, respectively.

13.2 Bias. The collaborative test did not find any bias in the analytical method.

13.3 Range. The range of this method is 0.02 to 2,000 µg F^-/ml; however, measurements of less than 0.1 µg F^-/ml require extra care.

14.0 Pollution Prevention. [Reserved]

15.0 Waste Management. [Reserved]

16.0 Alternative Procedures

16.1 Compliance with ASTM D 3270–73T, 91, 95 ''Analysis for Fluoride Content of the Atmosphere and Plant Tissues (Semiautomated Method)'' is an acceptable alternative for the distillation and analysis requirements specified in Sections 11.1 and 11.2 when applied to suitable aliquots of Containers 1 and 2 samples.

17.0 References

Same as Method 13A, Section 16.0, References 1 and 2, with the following addition:

1. MacLeod, Kathryn E., and Howard L. Crist. Comparison of the SPADNS-Zirconium Lake and Specific Ion Electrode Methods of Fluoride Determination in Stack Emission Samples. Analytical Chemistry. 45:1272–1273. 1973.

18.0 Tables, Diagrams, Flowcharts, and Validation Data. [Reserved]

Method 14—Determination of Fluoride Emissions From Potroom Roof Monitors for Primary Aluminum Plants

Note: This method does not include all of the specifications (*e.g.*, equipment and supplies) and procedures (*e.g.*, sampling and analytical) essential to its performance. Some material is incorporated by reference from other methods in this part. Therefore, to obtain reliable results, persons using this method should have a thorough knowledge of at least the following additional test methods: Method 1, Method 2, Method 3, Method 5, Method 13A, and Method 13B.

1.0 Scope and Application

1.1 Analytes.

Analyte	CAS No.	Sensitivity
Total fluorides as Fluorine	7782–41–4	Not determined.

1.2 Applicability. This method is applicable for the determination of fluoride emissions from roof monitors at primary aluminum reduction plant potroom groups.

1.3 Data Quality Objectives. Adherence to the requirements of this method will enhance the quality of the data obtained from air pollutant sampling methods.

2.0 Summary of Method

2.1 Gaseous and particulate fluoride roof monitor emissions are drawn into a permanent sampling manifold through several large nozzles. The sample is transported from the sampling manifold to ground level through a duct. The fluoride content of the gas in the duct is determined using either Method 13A or Method 13B. Effluent velocity and volumetric flow rate are determined using anemometers located in the roof monitor.

3.0 Definitions

Potroom means a building unit which houses a group of electrolytic cells in which aluminum is produced.

Potroom group means an uncontrolled potroom, a potroom which is controlled individually, or a group of potrooms or potroom segments ducted to a common control system.

Roof monitor means that portion of the roof of a potroom where gases not captured at the cell exit from the potroom.

4.0 Interferences

Same as Section 4.0 of either Method 13A or Method 13B, with the addition of the following:

4.1 Magnetic Field Effects. Anemometer readings can be affected by potroom magnetic field effects. Section 6.1 provides for minimization of this interference through proper shielding or encasement of anemometer components.

5.0 Safety

5.1 Disclaimer. This method may involve hazardous materials, operations, and equipment. This test method may not address all of the safety problems associated with its use. It is the responsibility of the user of this test method to establish appropriate safety and health practices and to determine the applicability of regulatory limitations prior to performing this test method.

5.2 Corrosive Reagents. Same as Section 5.2 of either Method 13A or Method 13B.

6.0 Equipment and Supplies

Same as Section 6.0 of either Method 13A or Method 13B, as applicable, with the addition of the following:

6.1 Velocity Measurement Apparatus.

6.1.1 Anemometer Specifications. Propeller anemometers, or equivalent. Each anemometer shall meet the following specifications:

6.1.1.1 Its propeller shall be made of polystyrene, or similar material of uniform density. To ensure uniformity of performance among propellers, it is desirable that all propellers be made from the same mold.

6.1.1.2 The propeller shall be properly balanced, to optimize performance.

6.1.1.3 When the anemometer is mounted horizontally, its threshold velocity shall not exceed 15 m/min (50 ft/min).

6.1.1.4 The measurement range of the anemometer shall extend to at least 600 m/min (2,000 ft/min).

6.1.1.5 The anemometer shall be able to withstand prolonged exposure to dusty and corrosive environments; one way of achieving this is to purge the bearings of the anemometer continuously with filtered air during operation.

6.1.1.6 All anemometer components shall be properly shielded or encased, such that the performance of the anemometer is uninfluenced by potroom magnetic field effects.

6.1.1.7 A known relationship shall exist between the electrical output signal from the anemometer generator and the propeller shaft rpm (see Section 10.2.1). Anemometers having other types of output signals (*e.g.*, optical) may be used, subject to the approval of the Administrator. If other types of anemometers are used, there must be a known relationship between output signal and shaft rpm (see Section 10.2.2).

6.1.1.8 Each anemometer shall be equipped with a suitable readout system (see Section 6.1.3).

6.1.2 Anemometer Installation Requirements.

6.1.2.1 Single, Isolated Potroom. If the affected facility consists of a single, isolated potroom (or potroom segment), install at least one anemometer for every 85 m (280 ft) of roof monitor length. If the length of the roof monitor divided by 85 m (280 ft) is not a whole number, round the fraction to the nearest whole number to determine the number of anemometers needed. For monitors that are less than 130 m (430 ft) in length, use at least two anemometers. Divide the monitor cross-section into as many equal areas as anemometers, and locate an anemometer at the centroid of each equal area. See exception in Section 6.1.2.3.

6.1.2.2 Two or More Potrooms. If the affected facility consists of two or more potrooms (or potroom segments) ducted to a common control device, install anemometers in each potroom (or segment) that contains a sampling manifold. Install at least one anemometer for every 85 m (280 ft) of roof monitor length of the potroom (or segment). If the potroom (or segment) length divided by 85 m (280 ft) is not a whole number, round the fraction to the nearest whole number to determine the number of anemometers needed. If the potroom (or segment) length is less than 130 m (430 ft), use at least two anemometers. Divide the potroom (or segment) monitor cross-section into as many equal areas as anemometers, and locate an anemometer at the centroid of each equal area. See exception in Section 6.1.2.3.

6.1.2.3 Placement of Anemometer at the Center of Manifold. At least one anemometer shall be installed in the immediate vicinity (*i.e.,* within 10 m (33 ft)) of the center of the manifold (see Section 6.2.1). For its placement in relation to the width of the monitor, there are two alternatives. The first is to make a velocity traverse of the width of the roof monitor where an anemometer is to be placed and install the anemometer at a point of average velocity along this traverse. The traverse may be made with any suitable low velocity measuring device, and shall be made during normal process operating conditions. The second alternative is to install the anemometer half-way across the width of the roof monitor. In this latter case, the velocity traverse need not be conducted.

6.1.3 Recorders. Recorders that are equipped with suitable auxiliary equipment (*e.g.,* transducers) for converting the output signal from each anemometer to a continuous recording of air flow velocity or to an integrated measure of volumetric flowrate shall be used. A suitable recorder is one that allows the output signal from the propeller anemometer to be read to within 1 percent when the velocity is between 100 and 120 m/min (330 and 390 ft/min). For the purpose of recording velocity, ''continuous'' shall mean one readout per 15-minute or shorter time interval. A constant amount of time shall elapse between readings. Volumetric flow rate may be determined by an electrical count of anemometer revolutions. The recorders or counters shall permit identification of the velocities or flowrates measured by each individual anemometer.

6.1.4 Pitot Tube. Standard-type pitot tube, as described in Section 6.7 of Method 2, and having a coefficient of 0.99 ± 0.01.

6.1.5 Pitot Tube (Optional). Isolated, Type S pitot, as described in Section 6.1 of Method 2, and having a known coefficient, determined as outlined in Section 4.1 of Method 2.

6.1.6 Differential Pressure Gauge. Inclined manometer, or equivalent, as described in Section 6.1.2 of Method 2.

6.2 Roof Monitor Air Sampling System.

6.2.1 Manifold System and Ductwork. A minimum of one manifold system shall be installed for each potroom group. The manifold system and ductwork shall meet the following specifications:

6.2.1.1 The manifold system and connecting duct shall be permanently installed to draw an air sample from the roof monitor to ground level. A typical installation of a duct for drawing a sample from a roof monitor to ground level is shown in Figure 14–1 in Section 17.0. A plan of a manifold system that is located in a roof monitor is shown in Figure 14–2. These drawings represent a typical installation for a generalized roof monitor. The dimensions on these figures may be altered slightly to make the manifold system fit into a particular roof monitor, but the general configuration shall be followed.

6.2.1.2 There shall be eight nozzles, each having a diameter of 0.40 to 0.50 m.

6.2.1.3 The length of the manifold system from the first nozzle to the eighth shall be 35 m (115 ft) or eight percent of the length of the potroom (or potroom segment) roof monitor, whichever is greater. Deviation from this requirement is subject to the approval of the Administrator.

6.2.1.4 The duct leading from the roof monitor manifold system shall be round with a diameter of 0.30 to 0.40 m (1.0 to 1.3 ft). All connections in the ductwork shall be leak-free.

6.2.1.5 As shown in Figure 14–2, each of the sample legs of the manifold shall have a device, such as a blast gate or valve, to enable adjustment of the flow into each sample nozzle.

6.2.1.6 The manifold system shall be located in the immediate vicinity of one of the propeller anemometers (see Section 8.1.1.4) and as close as possible to the midsection of the potroom (or potroom segment). Avoid locating the manifold system near the end of a potroom or in a section where the aluminum reduction pot arrangement is not typical of the rest of the potroom (or potroom segment). The sample nozzles shall be centered in the throat of the roof monitor (see Figure 14–1).

6.2.1.7 All sample-exposed surfaces within the nozzles, manifold, and sample duct shall be constructed with 316 stainless steel. Alternatively, aluminum may be used if a new ductwork is conditioned with fluoride-laden roof monitor air for a period of six weeks before initial testing. Other materials of construction may be used if it is demonstrated through comparative testing, to the satisfaction of the Administrator, that there is no loss of fluorides in the system.

6.2.1.8 Two sample ports shall be located in a vertical section of the duct between the roof monitor and the exhaust fan (see Section 6.2.2). The sample ports shall be at least 10 duct diameters downstream and three diameters upstream from any flow disturbance such as a bend or contraction. The two sample ports shall be situated 90° apart. One of the sample ports shall be situated so that the duct can be traversed in the plane of the nearest upstream duct bend.

6.2.2 Exhaust Fan. An industrial fan or blower shall be attached to the sample duct at ground level (see Figure 14–1). This exhaust fan shall have a capacity such that a large enough volume of air can be pulled through the ductwork to maintain an isokinetic sampling rate in all the sample nozzles for all flow rates normally encountered in the roof monitor. The exhaust fan volumetric flow rate shall be adjustable so that the roof monitor gases can be drawn isokinetically into the sample nozzles. This control of flow may be achieved by a damper on the inlet to the exhauster or by any other workable method.

6.3 Temperature Measurement Apparatus. To monitor and record the temperature of the roof monitor effluent gas, and consisting of the following:

6.3.1 Temperature Sensor. A temperature sensor shall be installed in the roof monitor near the sample duct. The temperature sensor shall conform to the specifications outlined in Method 2, Section 6.3.

6.3.2 Signal Transducer. Transducer, to change the temperature sensor voltage output to a temperature readout.

6.3.3 Thermocouple Wire. To reach from roof monitor to signal transducer and recorder.

6.3.4 Recorder. Suitable recorder to monitor the output from the thermocouple signal transducer.

7.0 Reagents and Standards

Same as Section 7.0 of either Method 13A or Method 13B, as applicable.

8.0 Sample Collection, Preservation, Storage, and Transport

8.1 Roof Monitor Velocity Determination.

8.1.1 Velocity Estimate(s) for Setting Isokinetic Flow. To assist in setting isokinetic flow in the manifold sample nozzles, the anticipated average velocity in the section of the roof monitor containing the sampling manifold shall be estimated before each test run. Any convenient means to make this estimate may be used (*e.g.,* the velocity indicated by the anemometer in the section of the roof monitor containing the sampling manifold may be continuously monitored during the 24-hour period before the test run). If there is question as to whether a single estimate of average velocity is adequate for an entire test run (*e.g.,* if velocities are anticipated to be significantly different during different potroom operations), the test run may be divided into two or more ''sub-runs,'' and a different estimated average velocity may be used for each sub-run (see Section 8.4.2).

8.1.2 Velocity Determination During a Test Run. During the actual test run, record the velocity or volumetric flowrate readings of each propeller anemometer in the roof monitor. Readings shall be taken from each anemometer at equal time intervals of 15 minutes or less (or continuously).

8.2 Temperature Recording. Record the temperature of the roof monitor effluent gases at least once every 2 hours during the test run.

8.3 Pretest Ductwork Conditioning. During the 24-hour period immediately preceding the test run, turn on the exhaust fan, and draw roof monitor air through the manifold system and ductwork. Adjust the fan to draw a volumetric flow through the duct such that the velocity of gas entering the manifold nozzles approximates the average velocity of the air exiting the roof monitor in the vicinity of the sampling manifold.

8.4 Manifold Isokinetic Sample Rate Adjustment(s).

8.4.1 Initial Adjustment. Before the test run (or first sub-run, if applicable; see Sections 8.1.1 and 8.4.2), adjust the fan such that air enters the manifold sample nozzles at a velocity equal to the appropriate estimated average velocity determined under Section 8.1.1. Use Equation 14–1 (Section 12.2.2) to determine the correct stream velocity needed in the duct at the sampling location, in order for sample gas to be drawn isokinetically into the manifold nozzles. Next, verify that the correct stream velocity has been achieved, by performing a pitot tube traverse of the sample duct (using either a standard or Type S pitot tube); use the procedure outlined in Method 2.

8.4.2 Adjustments During Run. If the test run is divided into two or more ''sub-runs'' (see Section 8.1.1), additional isokinetic rate adjustment(s) may become necessary during the run. Any such adjustment shall be made just before the start of a sub-run, using the procedure outlined in Section 8.4.1 above.

Note: Isokinetic rate adjustments are not permissible during a sub-run.

8.5 Pretest Preparation, Preliminary Determinations, Preparation of Sampling Train, Leak-Check Procedures, Sampling Train Operation, and Sample Recovery. Same as Method 13A, Sections 8.1 through 8.6, with the exception of the following:

8.5.1 A single train shall be used for the entire sampling run. Alternatively, if two or more sub-runs are performed, a separate train may be used for each sub-run; note, however, that if this option is chosen, the area of the sampling nozzle shall be the same (±2 percent) for each train. If the test run is divided into sub-runs, a complete traverse of the duct shall be performed during each sub-run.

8.5.2 Time Per Run. Each test run shall last 8 hours or more; if more than one run is to be performed, all runs shall be of approximately the same (±10 percent) length. If questions exist as to the representativeness of an 8-hour test,

a longer period should be selected. Conduct each run during a period when all normal operations are performed underneath the sampling manifold. For most recently-constructed plants, 24 hours are required for all potroom operations and events to occur in the area beneath the sampling manifold. During the test period, all pots in the potroom group shall be operated such that emissions are representative of normal operating conditions in the potroom group.

9.0 Quality Control

9.1 Miscellaneous Quality Control Measures.

Section	Quality Control Measure	Effect
8.0, 10.0	Sampling equipment leak-check and calibration	Ensure accurate measurement of gas flow rate in duct and of sample volume.
10.3, 10.4	Initial and periodic performance checks of roof monitor effluent gas characterization apparatus.	Ensure accurate and precise measurement of roof monitor effluent gas temperature and flow rate.
11.0	Interference/recovery efficiency check during distillation.	Minimize negative effects of used acid.

9.2 Volume Metering System Checks. Same as Method 5, Section 9.2.

10.0 Calibration and Standardization

Same as Section 10.0 of either Method 13A or Method 13B, as applicable, with the addition of the following:

10.1 Manifold Intake Nozzles. The manifold intake nozzles shall be calibrated when the manifold system is installed or, alternatively, the manifold may be preassembled and the nozzles calibrated on the ground prior to installation. The following procedures shall be observed:

10.1.1 Adjust the exhaust fan to draw a volumetric flow rate (refer to Equation 14–1) such that the entrance velocity into each manifold nozzle approximates the average effluent velocity in the roof monitor.

10.1.2 Measure the velocity of the air entering each nozzle by inserting a standard pitot tube into a 2.5 cm or less diameter hole (see Figure 14–2) located in the manifold between each blast gate (or valve) and nozzle. Note that a standard pitot tube is used, rather than a type S, to eliminate possible velocity measurement errors due to cross-section blockage in the small (0.13 m diameter) manifold leg ducts. The pitot tube tip shall be positioned at the center of each manifold leg duct. Take care to ensure that there is no leakage around the pitot tube, which could affect the indicated velocity in the manifold leg.

10.1.3 If the velocity of air being drawn into each nozzle is not the same, open or close each blast gate (or valve) until the velocity in each nozzle is the same. Fasten each blast gate (or valve) so that it will remain in position, and close the pitot port holes.

10.2 Initial Calibration of Propeller Anemometers.

10.2.1 Anemometers that meet the specifications outlined in Section 6.1.1 need not be calibrated, provided that a reference performance curve relating anemometer signal output to air velocity (covering the velocity range of interest) is available from the manufacturer. If a reference performance curve is not available from the manufacturer, such a curve shall be generated.

For the purpose of this method, a ''reference'' performance curve is defined as one that has been derived from primary standard calibration data, with the anemometer mounted vertically. ''Primary standard'' data are obtainable by: (a) direct calibration of one or more of the anemometers by the National Institute of Standards and Technology (NIST); (b) NIST-traceable calibration; or (c) Calibration by direct measurement of fundamental parameters such as length and time (*e.g.,* by moving the anemometers through still air at measured rates of speed, and recording the output signals).

10.2.2 Anemometers having output signals other than electrical (*e.g.,* optical) may be used, subject to the approval of the Administrator. If other types of anemometers are used, a reference performance curve shall be generated, using procedures subject to the approval of the Administrator.

10.2.3 The reference performance curve shall be derived from at least the following three points: 60 ± 15, 900 ± 100, and 1800 ± 100 rpm.

10.3 Initial Performance Checks. Conduct these checks within 60 days before the first performance test.

10.3.1 Anemometers. A performance-check shall be conducted as outlined in Sections 10.3.1.1 through 10.3.1.3. Alternatively, any other suitable method that takes into account the signal output, propeller condition, and threshold velocity of the anemometer may be used, subject to the approval of the Administrator.

10.3.1.1 Check the signal output of the anemometer by using an accurate rpm generator (see Figure 14–3) or synchronous motors to spin the propeller shaft at each of the three rpm settings described in Section 10.2.3, and measuring the output signal at each setting. If, at each setting, the output signal is within 5 percent of the manufacturer's value, the anemometer can be used. If the anemometer performance is unsatisfactory, the anemometer shall either be replaced or repaired.

10.3.1.2 Check the propeller condition, by visually inspecting the propeller, making note of any significant damage or warpage; damaged or deformed propellers shall be replaced.

10.3.1.3 Check the anemometer threshold velocity as follows: With the anemometer mounted as shown in Figure 14–4(A), fasten a known weight (a straight-pin will suffice) to the anemometer propeller at a fixed distance from the center of the propeller shaft. This will generate a known torque; for example, a 0.1-g weight, placed 10 cm from the center of the shaft, will generate a torque of 1.0 g-cm. If the known torque causes the propeller to rotate downward, approximately 90° [see Figure 14–4(B)], then the known torque is greater than or equal to the starting torque; if the propeller fails to rotate approximately 90°, the known torque is less than the starting torque. By trying different combinations of weight and distance, the starting torque of a particular anemometer can be satisfactorily estimated. Once an estimate of the starting torque has been obtained, the threshold velocity of the anemometer (for horizontal mounting) can be estimated from a graph such as Figure 14–5 (obtained from the manufacturer). If the horizontal threshold velocity is acceptable [<15 m/min (50 ft/min), when this technique is used], the anemometer can be used. If the threshold velocity of an anemometer is found to be unacceptably high, the anemometer shall either be replaced or repaired.

10.3.2 Recorders and Counters. Check the calibration of each recorder and counter (see Section 6.1.2) at a minimum of three points, approximately spanning the expected range of velocities. Use the calibration

procedures recommended by the manufacturer, or other suitable procedures (subject to the approval of the Administrator). If a recorder or counter is found to be out of calibration by an average amount greater than 5 percent for the three calibration points, replace or repair the system; otherwise, the system can be used.

10.3.3 Temperature Measurement Apparatus. Check the calibration of the Temperature Measurement Apparatus, using the procedures outlined in Section 10.3 of Method 2, at temperatures of 0, 100, and 150 °C (32, 212, and 302 °F). If the calibration is off by more than 5 °C (9 °F) at any of the temperatures, repair or replace the apparatus; otherwise, the apparatus can be used.

10.4 Periodic Performance Checks. Repeat the procedures outlined in Section 10.3 no more than 12 months after the initial performance checks. If the above systems pass the performance checks (*i.e.,* if no repair or replacement of any component is necessary), continue with the performance checks on a 12-month interval basis. However, if any of the above systems fail the performance checks, repair or replace the system(s) that failed, and conduct the periodic performance checks on a 3-month interval basis, until sufficient information (to the satisfaction of the Administrator) is obtained to establish a modified performance check schedule and calculation procedure.

Note: If any of the above systems fails the 12-month periodic performance checks, the data for the past year need not be recalculated.

11.0 Analytical Procedures

Same as Section 11.0 of either Method 13A or Method 13B.

12.0 Data Analysis and Calculations

Same as Section 12.0 of either Method 13A or Method 13B, as applicable, with the following additions and exceptions:

12.1 Nomenclature.

A = Roof monitor open area, m² (ft²).

B_{ws} = Water vapor in the gas stream, portion by volume.

C_s = Average fluoride concentration in roof monitor air, mg F/dscm (gr/dscf).

D_d = Diameter of duct at sampling location, m (ft).

D_n = Diameter of a roof monitor manifold nozzle, m (ft).

F = Emission Rate multiplication factor, dimensionless.

F_t = Total fluoride mass collected during a particular sub-run (from Equation 13A–1 of Method 13A or Equation 13B–1 of Method 13B), mg F^- (gr F^-).

M_d = Mole fraction of dry gas, dimensionless.

P_{rm} = Pressure in the roof monitor; equal to barometric pressure for this application.

Q_{sd} = Average volumetric flow from roof monitor at standard conditions on a dry basis, m³/min.

T_{rm} = Average roof monitor temperature (from Section 8.2), °C (°F).

V_d = Desired velocity in duct at sampling location, m/sec.

V_m = Anticipated average velocity (from Section 8.1.1) in sampling duct, m/sec.

V_{mt} = Arithmetic mean roof monitor effluent gas velocity, m/sec.

V_s = Actual average velocity in the sampling duct (from Equation 2–9 of Method 2 and data obtained from Method 13A or 13B), m/sec.

12.2 Isokinetic Sampling Check.

12.2.1 Calculate the arithmetic mean of the roof monitor effluent gas velocity readings (v_m) as measured by the anemometer in the section of the roof monitor containing the sampling manifold. If two or more sub-runs have been performed, the average velocity for each sub-run may be calculated separately.

12.2.2 Calculate the expected average velocity (v_d) in the duct, corresponding to each value of v_m obtained under Section 12.2.1, using Equation 14–1.

$$V_d = \frac{8 D_n^2 V_m}{60 D_d^2} \qquad \text{Eq. 14-1}$$

Where:

8 = number of required manifold nozzles.

60 = sec/min.

12.2.3 Calculate the actual average velocity (v_s) in the sampling duct for each run or sub-run according to Equation 2–9 of Method 2, using data obtained during sampling (Section 8.0 of Method 13A).

12.2.4 Express each vs value from Section 12.2.3 as a percentage of the corresponding v_d value from Section 12.2.2.

12.2.4.1 If vs is less than or equal to 120 percent of v_d, the results are acceptable (note that in cases where the above calculations have been performed for each sub-run, the results are acceptable if the average percentage for all sub-runs is less than or equal to 120 percent).

12.2.4.2 If v_s is more than 120 percent of v_d, multiply the reported emission rate by the following factor:

$$F = 1 + \frac{\frac{100\ V_s}{V_d} - 120}{200} \qquad \text{Eq. 14-2}$$

12.3 Average Velocity of Roof Monitor Effluent Gas. Calculate the arithmetic mean roof monitor effluent gas velocity (v_{mt}) using all the velocity or volumetric flow readings from Section 8.1.2.

12.4 Average Temperature of Roof Monitor Effluent Gas. Calculate the arithmetic mean roof monitor effluent gas temperature (T_m) using all the temperature readings recorded in Section 8.2.

12.5 Concentration of Fluorides in Roof Monitor Effluent Gas.

12.5.1 If a single sampling train was used throughout the run, calculate the average fluoride concentration for the roof monitor using Equation 13A–2 of Method 13A.

12.5.2 If two or more sampling trains were used (*i.e.,* one per sub-run), calculate the average fluoride concentration for the run using Equation 14–3:

$$C_s = \frac{\sum_{i=1}^{n} (F_t)_i}{\sum_{i=1}^{n} \left(V_{m(std)}\right)_i} \qquad \text{Eq. 14-3}$$

Where:

n = Total number of sub-runs.

12.6 Mole Fraction of Dry Gas.

$$M_d = 1 - B_{ws} \qquad \text{Eq. 14-4}$$

12.7 Average Volumetric Flow Rate of Roof Monitor Effluent Gas. Calculate the arithmetic mean volumetric flow rate of the roof monitor effluent gases using Equation 14–5.

$$Q_{sd} = \frac{K_1\ V_{mt}\ M_d\ P_m\ A}{T_{rm}} \qquad \text{Eq. 14-5}$$

Where:

K_1 = 0.3858 K/mm Hg for metric units, = 17.64 °R/in. Hg for English units.

13.0 Method Performance. [Reserved]

14.0 Pollution Prevention. [Reserved]

15.0 Waste Management. [Reserved]

16.0 References

Same as Section 16.0 of either Method 13A or Method 13B, as applicable, with the addition of the following:

1. Shigehara, R.T. A Guideline for Evaluating Compliance Test Results (Isokinetic Sampling Rate Criterion). U.S. Environmental Protection Agency, Emission Measurement Branch, Research Triangle Park, NC. August 1977.

BILLING CODE 6560-50-P

17.0 Tables, Diagrams, Flowcharts, and Validation Data

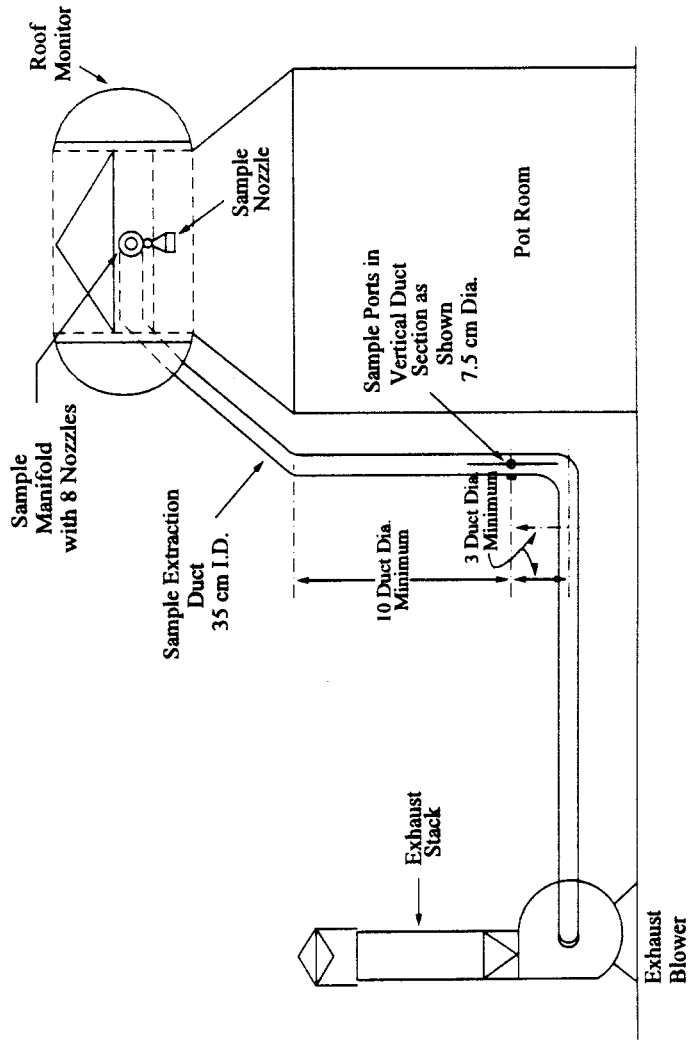

Figure 14-1. Roof Monitor Sampling System.

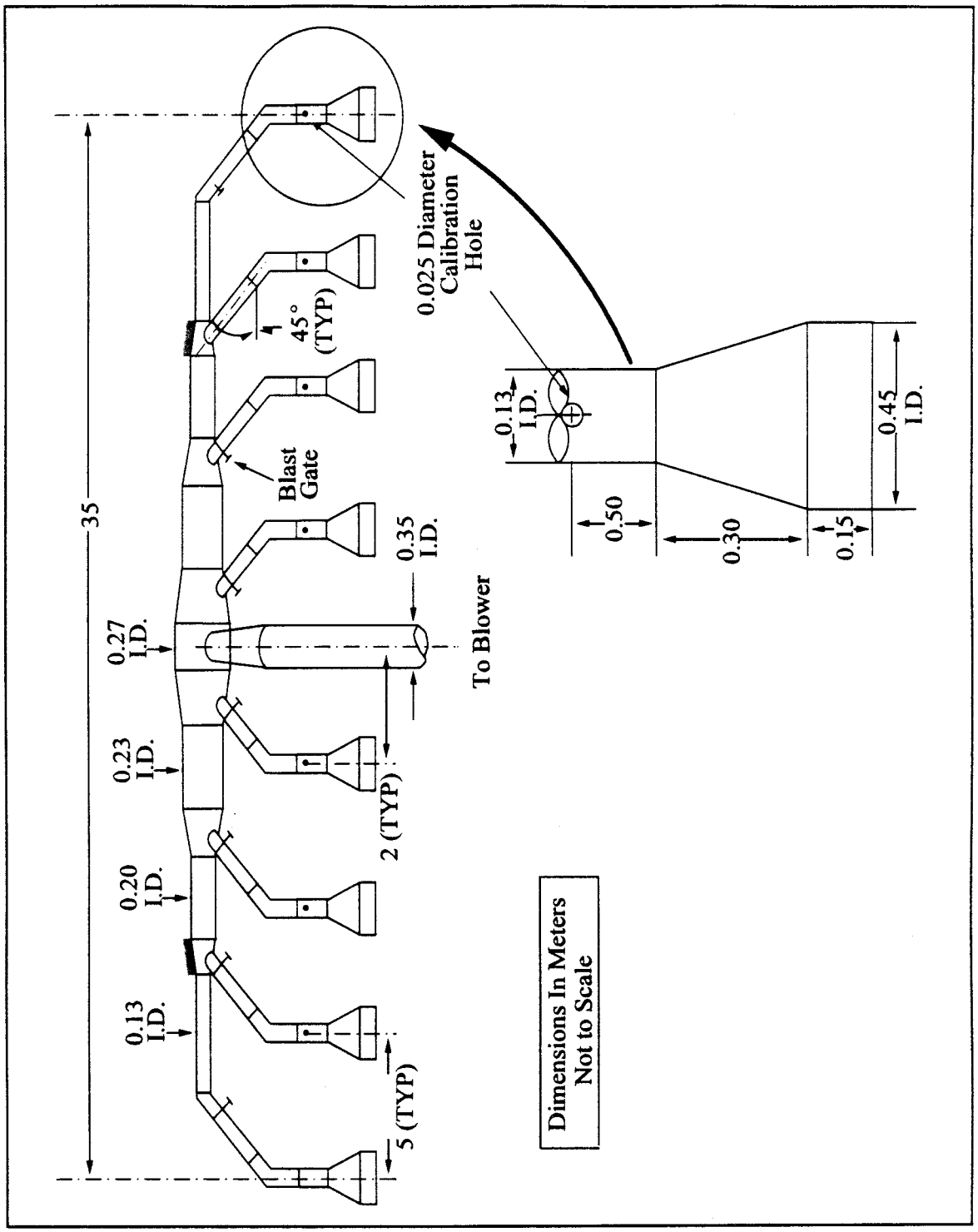

Figure 14-2. Sampling Manifold and Nozzles.

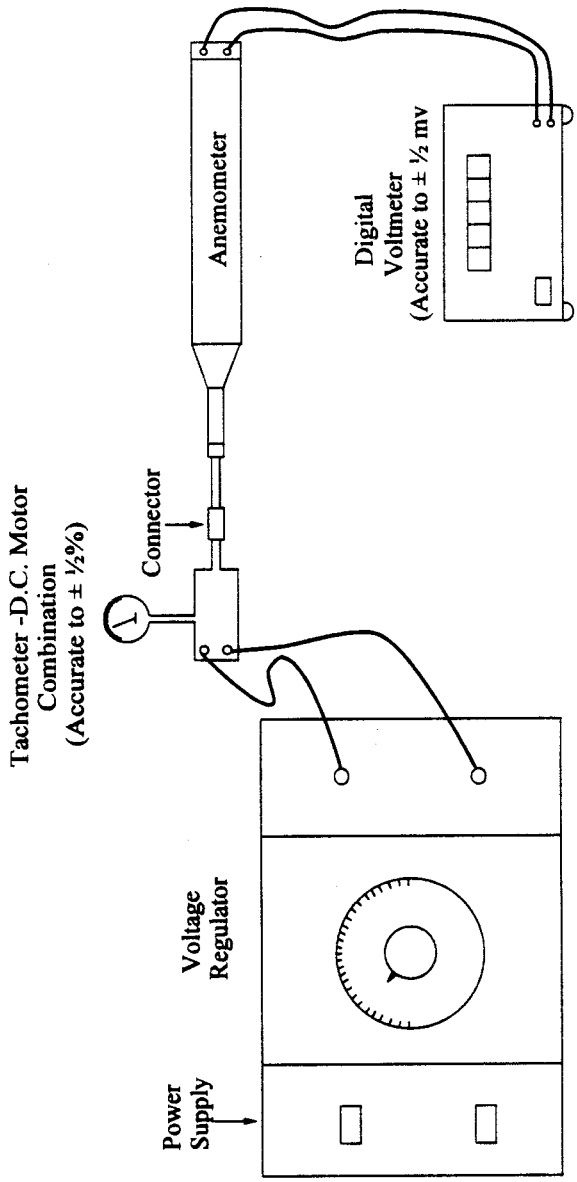

Figure 14-3. Typical RPM Generator.

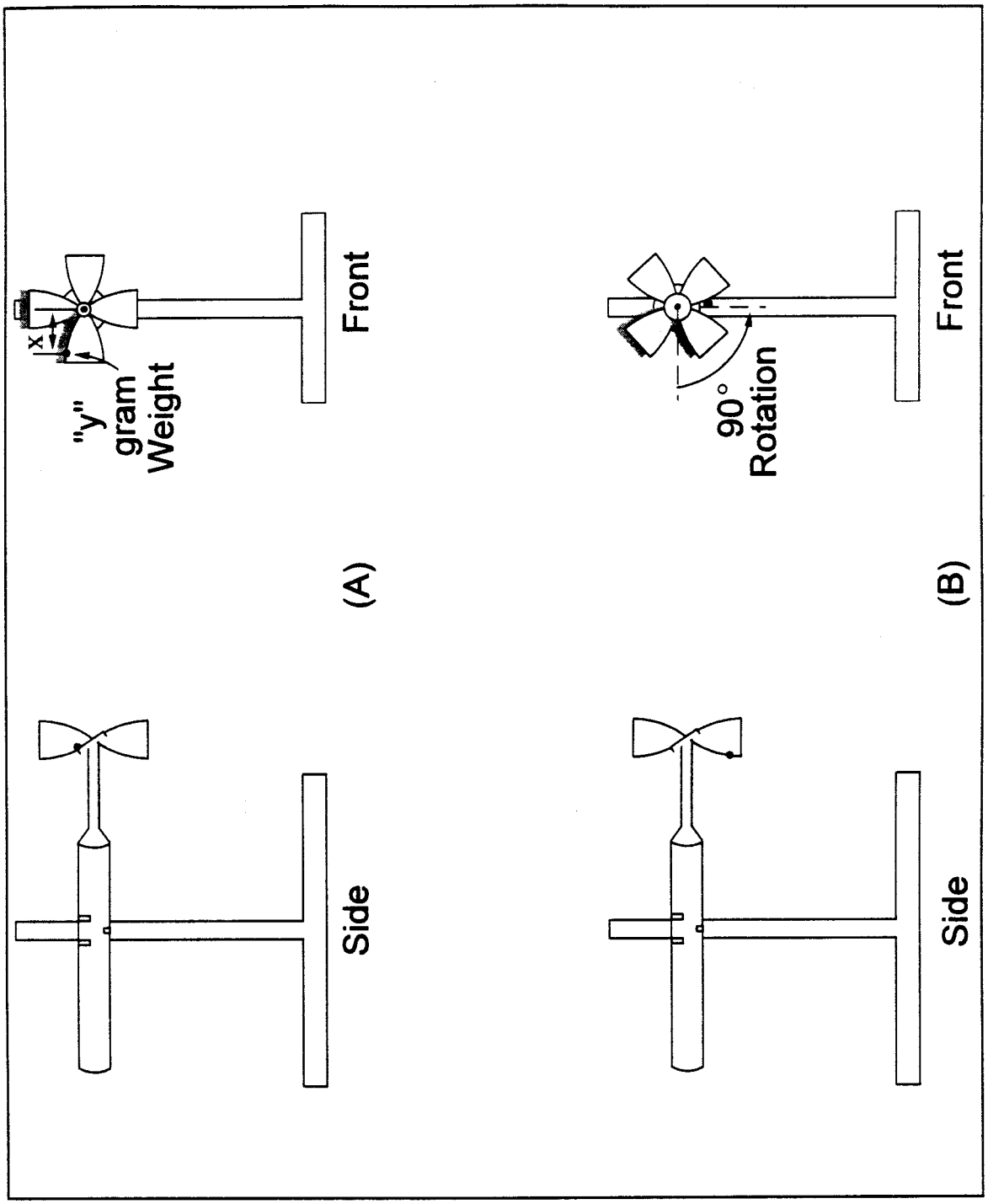

Figure 14-4. Check of Anemometer Starting Torque.

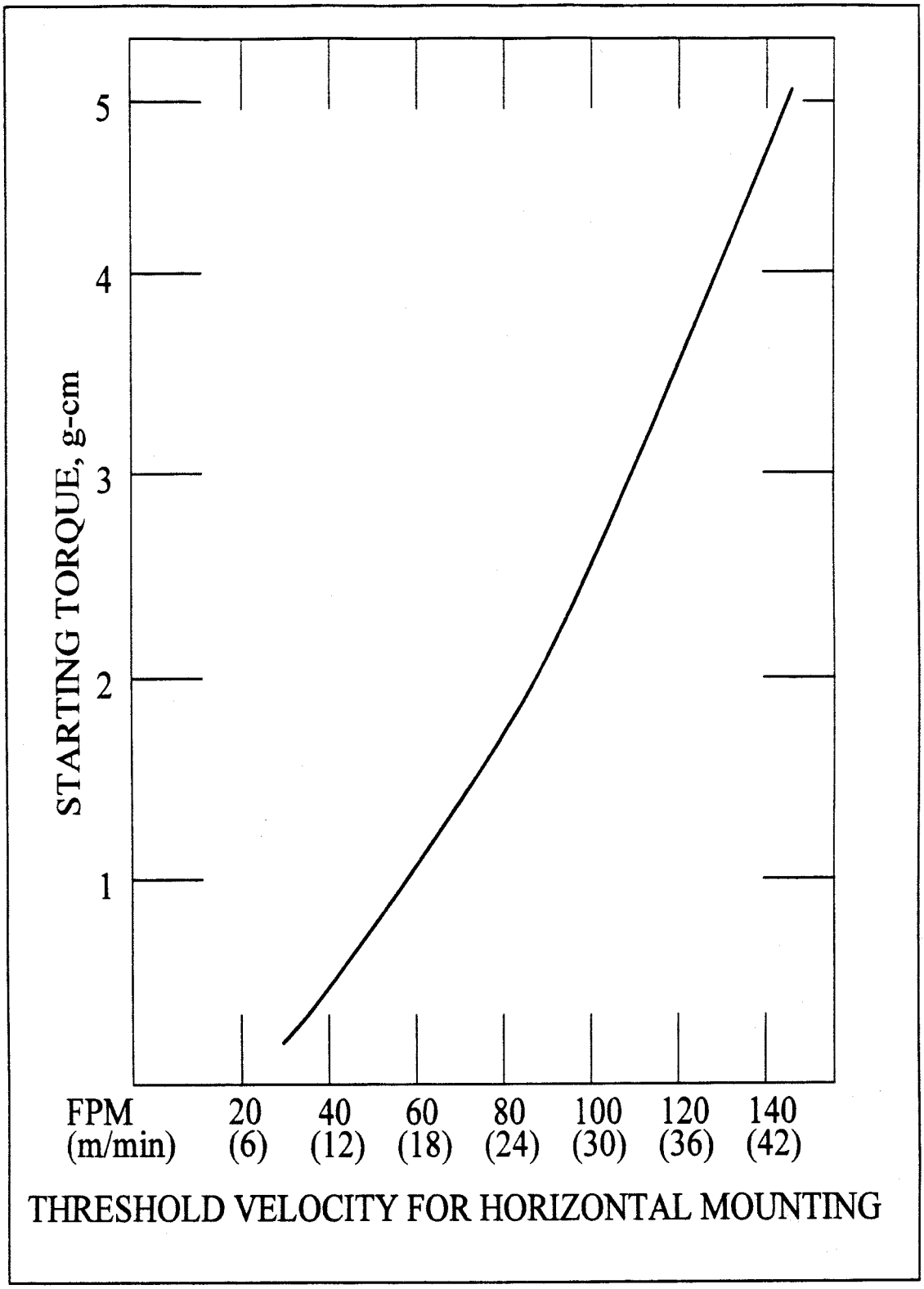

Figure 14-5. Typical Curve of Starting Torque vs. Horizontal Threshold Velocity for Propeller Anemometers.

BILLING CODE 6560-50-C

* * * * *

Method 15—Determination of Hydrogen Sulfide, Carbonyl Sulfide, and Carbon Disulfide Emissions From Stationary Sources

Note: This method is not inclusive with respect to specifications (*e.g.,* equipment and supplies) and procedures (*e.g.,* sampling and analytical) essential to its performance. Some material is incorporated by reference from other methods in this part. Therefore, to obtain reliable results, persons using this method should have a thorough knowledge of gas chromatography techniques.

1.0 Scope and Application

1.1 Analytes.

Analyte	CAS No.	Sensitivity (See Sec 13.2)
Carbon disulfide [CS_2]	75–15–0	0.5 ppmv
Carbonyl sulfide [COS]	463–58–1	0.5 ppmv
Hydrogen sulfide [H_2S]	7783–06–4	0.5 ppmv

1.2 Applicability.

1.2.1 This method applies to the determination of emissions of reduced sulfur compounds from tail gas control units of sulfur recovery plants, H_2S in fuel gas for fuel gas combustion devices, and where specified in other applicable subparts of the regulations.

1.2.2 The method described below uses the principle of gas chromatographic (GC) separation and flame photometric detection (FPD). Since there are many systems or sets of operating conditions that represent useable methods for determining sulfur emissions, all systems which employ this principle, but differ only in details of equipment and operation, may be used as alternative methods, provided that the calibration precision and sample-line loss criteria are met.

1.3 Data Quality Objectives. Adherence to the requirements of this method will enhance the quality of the data obtained from air pollutant sampling methods.

2.0 Summary of Method

2.1 A gas sample is extracted from the emission source and diluted with clean dry air (if necessary). An aliquot of the diluted sample is then analyzed for CS_2, COS, and H_2S by GC/FPD.

3.0 Definitions. [Reserved]

4.0 Interferences

4.1 Moisture Condensation. Moisture condensation in the sample delivery system, the analytical column, or the FPD burner block can cause losses or interferences. This potential is eliminated by heating the probe, filter box, and connections, and by maintaining the SO_2 scrubber in an ice water bath. Moisture is removed in the SO_2 scrubber and heating the sample beyond this point is not necessary provided the ambient temperature is above 0 °C (32 °F). Alternatively, moisture may be eliminated by heating the sample line, and by conditioning the sample with dry dilution air to lower its dew point below the operating temperature of the GC/FPD analytical system prior to analysis.

4.2 Carbon Monoxide (CO) and Carbon Dioxide (CO_2). CO and CO_2 have substantial desensitizing effects on the FPD even after 9:1 dilution. (Acceptable systems must demonstrate that they have eliminated this interference by some procedure such as eluting CO and CO_2 before any of the sulfur compounds to be measured.) Compliance with this requirement can be demonstrated by submitting chromatograms of calibration gases with and without CO_2 in the diluent gas. The CO_2 level should be approximately 10 percent for the case with CO_2 present. The two chromatograms should show agreement within the precision limits of Section 13.3.

4.3 Elemental Sulfur. The condensation of sulfur vapor in the sampling system can lead to blockage of the particulate filter. This problem can be minimized by observing the filter for buildup and changing as needed.

4.4 Sulfur Dioxide (SO_2). SO_2 is not a specific interferent but may be present in such large amounts that it cannot be effectively separated from the other compounds of interest. The SO_2 scrubber described in Section 6.1.3 will effectively remove SO_2 from the sample.

4.5 Alkali Mist. Alkali mist in the emissions of some control devices may cause a rapid increase in the SO_2 scrubber pH, resulting in low sample recoveries. Replacing the SO_2 scrubber contents after each run will minimize the chances of interference in these cases.

5.0 Safety

5.1 Disclaimer. This method may involve hazardous materials, operations, and equipment. This test method may not address all of the safety problems associated with its use. It is the responsibility of the user of this test to establish appropriate safety and health practices and determine the applicability of regulatory limitations to performing this test.

6.0 Equipment and Supplies

6.1 Sample Collection. See Figure 15–1. The sampling train component parts are discussed in the following sections:

6.1.1 Probe. The probe shall be made of Teflon or Teflon-lined stainless steel and heated to prevent moisture condensation. It shall be designed to allow calibration gas to enter the probe at or near the sample point entry. Any portion of the probe that contacts the stack gas must be heated to prevent moisture condensation. The probe described in Section 6.1.1 of Method 16A having a nozzle directed away from the gas stream is recommended for sources having particulate or mist emissions. Where very high stack temperatures prohibit the use of Teflon probe components, glass or quartz-lined probes may serve as substitutes.

6.1.2 Particulate Filter. 50-mm Teflon filter holder and a 1- to 2-micron porosity Teflon filter (available through Savillex Corporation, 5325 Highway 101, Minnetonka, Minnesota 55343). The filter holder must be maintained in a hot box at a temperature of at least 120 °C (248 °F).

6.1.3 SO_2 Scrubber. Three 300-ml Teflon segment impingers connected in series with flexible, thick-walled, Teflon tubing. (Impinger parts and tubing available through Savillex.) The first two impingers contain 100 ml of citrate buffer, and the third impinger is initially dry. The tip of the tube inserted into the solution should be constricted to less than 3-mm (⅛-in.) ID and should be immersed to a depth of at least 50 cm (2 in.). Immerse the impingers in an ice water bath and maintain near 0 °C. The scrubber solution will normally last for a 3-hour run before needing replacement. This will depend upon the effects of moisture and particulate matter on the solution strength and pH. Connections between the probe, particulate filter, and SO_2 scrubber shall be made of Teflon and as short in length as possible. All portions of the probe, particulate filter, and connections prior

to the SO_2 scrubber (or alternative point of moisture removal) shall be maintained at a temperature of at least 120 °C (248 °F).

6.1.4 Sample Line. Teflon, no greater than 13–mm (½-in.) ID. Alternative materials, such as virgin Nylon, may be used provided the line-loss test is acceptable.

6.1.5 Sample Pump. The sample pump shall be a leakless Teflon-coated diaphragm type or equivalent.

6.2 Analysis. The following items are needed for sample analysis:

6.2.1 Dilution System. The dilution system must be constructed such that all sample contacts are made of Teflon, glass, or stainless steel. It must be capable of approximately a 9:1 dilution of the sample.

6.2.2 Gas Chromatograph (see Figure 15–2). The gas chromatograph must have at least the following components:

6.2.2.1 Oven. Capable of maintaining the separation column at the proper operating temperature ± 1 °C.

6.2.2.2 Temperature Gauge. To monitor column oven, detector, and exhaust temperature ± 1 °C.

6.2.2.3 Flow System. Gas metering system to measure sample, fuel, combustion gas, and carrier gas flows.

6.2.2.4 Flame Photometric Detector.

6.2.2.4.1 Electrometer. Capable of full scale amplification of linear ranges of 10^{-9} to 10^{-4} amperes full scale.

6.2.2.4.2 Power Supply. Capable of delivering up to 750 volts.

6.2.2.5 Recorder. Compatible with the output voltage range of the electrometer.

6.2.2.6 Rotary Gas Valves. Multiport Teflon-lined valves equipped with sample loop. Sample loop volumes shall be chosen to provide the needed analytical range. Teflon tubing and fittings shall be used throughout to present an inert surface for sample gas. The GC shall be calibrated with the sample loop used for sample analysis.

6.2.2.7 GC Columns. The column system must be demonstrated to be capable of resolving three major reduced sulfur compounds: H_2S, COS, and CS_2. To demonstrate that adequate resolution has been achieved, a chromatogram of a calibration gas containing all three reduced sulfur compounds in the concentration range of the applicable standard must be submitted. Adequate resolution will be defined as base line separation of adjacent peaks when the amplifier attenuation is set so that the smaller peak is at least 50 percent of full scale. Base line separation is defined as a return to zero (±5 percent) in the interval between peaks. Systems not meeting this criteria may be considered alternate methods subject to the approval of the Administrator.

6.3 Calibration System (See Figure 15–3). The calibration system must contain the following components:

6.3.1 Flow System. To measure air flow over permeation tubes within 2 percent. Each flowmeter shall be calibrated after each complete test series with a wet-test meter. If the flow measuring device differs from the wet-test meter by more than 5 percent, the completed test shall be discarded. Alternatively, use the flow data that will yield the lowest flow measurement. Calibration with a wet-test meter before a test is optional. Flow over the permeation device may also be determined using a soap bubble flowmeter.

6.3.2 Constant Temperature Bath. Device capable of maintaining the permeation tubes at the calibration temperature within 0.1 °C.

6.3.3 Temperature Sensor. Thermometer or equivalent to monitor bath temperature within 0.1 °C.

7.0 Reagents and Standards

7.1 Fuel. Hydrogen gas (H_2). Prepurified grade or better.

7.2 Combustion Gas. Oxygen (O_2) or air, research purity or better.

7.3 Carrier Gas. Prepurified grade or better.

7.4 Diluent. Air containing less than 0.5 ppmv total sulfur compounds and less than 10 ppmv each of moisture and total hydrocarbons.

7.5 Calibration Gases.

7.5.1 Permeation Devices. One each of H_2S, COS, and CS_2, gravimetrically calibrated and certified at some convenient operating temperature. These tubes consist of hermetically sealed FEP Teflon tubing in which a liquified gaseous substance is enclosed. The enclosed gas permeates through the tubing wall at a constant rate. When the temperature is constant, calibration gases covering a wide range of known concentrations can be generated by varying and accurately measuring the flow rate of diluent gas passing over the tubes. These calibration gases are used to calibrate the GC/FPD system and the dilution system.

7.5.2 Cylinder Gases. Cylinder gases may be used as alternatives to permeation devices. The gases must be traceable to a primary standard (such as permeation tubes) and not used beyond the certification expiration date.

7.6 Citrate Buffer. Dissolve 300 g of potassium citrate and 41 g of anhydrous citric acid in 1 liter of water. Alternatively, 284 g of sodium citrate may be substituted for the potassium citrate. Adjust the pH to between 5.4 and 5.6 with potassium citrate or citric acid, as required.

8.0 Sample Collection, Preservation, Transport, and Storage

8.1 Pretest Procedures. After the complete measurement system has been set up at the site and deemed to be operational, the following procedures should be completed before sampling is initiated. These procedures are not required, but would be helpful in preventing any problem which might occur later to invalidate the entire test.

8.1.1 Leak-Check. Appropriate leak-check procedures should be employed to verify the integrity of all components, sample lines, and connections. The following procedure is suggested: For components upstream of the sample pump, attach the probe end of the sample line to a manometer or vacuum gauge, start the pump and pull a vacuum greater than 50 mm (2 in.) Hg, close off the pump outlet, and then stop the pump and ascertain that there is no leak for 1 minute. For components after the pump, apply a slight positive pressure and check for leaks by applying a liquid (detergent in water, for example) at each joint. Bubbling indicates the presence of a leak. As an alternative to the initial leak-test, the sample line loss test described in Section 8.3.1 may be performed to verify the integrity of components.

8.1.2 System Performance. Since the complete system is calibrated at the beginning and end of each day of testing, the precise calibration of each component is not critical. However, these components should be verified to operate properly. This verification can be performed by observing the response of flowmeters or of the GC output to changes in flow rates or calibration gas concentrations, respectively, and ascertaining the response to be within predicted limits. If any component or the complete system fails to respond in a normal and predictable manner, the source of the discrepancy should be identified and corrected before proceeding.

8.2 Sample Collection and Analysis

8.2.1 After performing the calibration procedures outlined in Section 10.0, insert the sampling probe into the test port ensuring that no dilution air enters the stack through the port. Begin sampling and dilute the sample approximately 9:1 using the dilution system. Note that the precise dilution factor is the one determined in Section 10.4. Condition the entire system with sample for a minimum of 15 minutes before beginning the analysis. Inject aliquots of the sample into the GC/FPD analyzer for analysis.

Determine the concentration of each reduced sulfur compound directly from the calibration curves or from the equation for the least-squares line.

8.2.2 If reductions in sample concentrations are observed during a sample run that cannot be explained by process conditions, the sampling must be interrupted to determine if the probe or filter is clogged with particulate matter. If either is found to be clogged, the test must be stopped and the results up to that point discarded. Testing may resume after cleaning or replacing the probe and filter. After each run, the probe and filter shall be inspected and, if necessary, replaced.

8.2.3 A sample run is composed of 16 individual analyses (injects) performed over a period of not less than 3 hours or more than 6 hours.

8.3 Post-Test Procedures.

8.3.1 Sample Line Loss. A known concentration of H_2S at the level of the applicable standard, ±20 percent, must be introduced into the sampling system at the opening of the probe in sufficient quantities to ensure that there is an excess of sample which must be vented to the atmosphere. The sample must be transported through the entire sampling system to the measurement system in the same manner as the emission samples. The resulting measured concentration is compared to the known value to determine the sampling system loss. For sampling losses greater than 20 percent, the previous sample run is not valid. Sampling losses of 0–20 percent must be corrected by dividing the resulting sample concentration by the fraction of recovery. The known gas sample may be calibration gas as described in Section 7.5. Alternatively, cylinder gas containing H_2S mixed in nitrogen and verified according to Section 7.1.4 of Method 16A may be used. The optional pretest procedures provide a good guideline for determining if there are leaks in the sampling system.

8.3.2 Determination of Calibration Drift. After each run, or after a series of runs made within a 24-hour period, perform a partial recalibration using the procedures in Section 10.0. Only H_2S (or other permeant) need be used to recalibrate the GC/FPD analysis system and the dilution system. Compare the calibration curves obtained after the runs to the calibration curves obtained under Section 10.3. The calibration drift should not exceed the limits set forth in Section 13.4. If the drift exceeds this limit, the intervening run or runs should be considered invalid. As an option, the calibration data set which gives the highest sample values may be chosen by the tester.

9.0 Quality Control

Section	Quality control measure	Effect
8.3.1	Sample line loss check	Ensures that uncorrected negative bias introduced by sample loss is no greater than 20 percent, and provides for correction of bias of 20 percent or less.
8.3.2	Calibration drift test	Ensures that bias introduced by drift in the measurement system output during the run is no greater than 5 percent.
10.0	Analytical calibration	Ensures precision of analytical results within 5 percent.

10.0 Calibration and Standardization

Prior to any sampling run, calibrate the system using the following procedures. (If more than one run is performed during any 24-hour period, a calibration need not be performed prior to the second and any subsequent runs. However, the calibration drift must be determined as prescribed in Section 8.3.2 after the last run is made within the 24-hour period.)

Note: This section outlines steps to be followed for use of the GC/FPD and the dilution system. The calibration procedure does not include detailed instructions because the operation of these systems is complex, and it requires an understanding of the individual system being used. Each system should include a written operating manual describing in detail the operating procedures associated with each component in the measurement system. In addition, the operator should be familiar with the operating principles of the components, particularly the GC/FPD. The references in Section 16.0 are recommended for review for this purpose.

10.1 Calibration Gas Permeation Tube Preparation.

10.1.1 Insert the permeation tubes into the tube chamber. Check the bath temperature to assure agreement with the calibration temperature of the tubes within 0.1 °C. Allow 24 hours for the tubes to equilibrate. Alternatively, equilibration may be verified by injecting samples of calibration gas at 1-hour intervals. The permeation tubes can be assumed to have reached equilibrium when consecutive hourly samples agree within 5 percent of their mean.

10.1.2 Vary the amount of air flowing over the tubes to produce the desired concentrations for calibrating the analytical and dilution systems. The air flow across the tubes must at all times exceed the flow requirement of the analytical systems. The concentration in ppmv generated by a tube containing a specific permeant can be calculated using Equation 15–1 in Section 12.2.

10.2 Calibration of Analytical System. Generate a series of three or more known concentrations spanning the linear range of the FPD (approximately 0.5 to 10 ppmv for a 1-ml sample) for each of the three major sulfur compounds. Bypassing the dilution system, inject these standards into the GC/FPD and monitor the responses until three consecutive injections for each concentration agree within 5 percent of their mean. Failure to attain this precision indicates a problem in the calibration or analytical system. Any such problem must be identified and corrected before proceeding.

10.3 Calibration Curves. Plot the GC/FPD response in current (amperes) versus their causative concentrations in ppmv on log-log coordinate graph paper for each sulfur compound. Alternatively, a least-squares equation may be generated from the calibration data using concentrations versus the appropriate instrument response units.

10.4 Calibration of Dilution System. Generate a known concentration of H_2S using the permeation tube system. Adjust the flow rate of diluent air for the first dilution stage so that the desired level of dilution is approximated. Inject the diluted calibration gas into the GC/FPD system until the results of three consecutive injections for each dilution agree within 5 percent of their mean. Failure to attain this precision in this step is an indication of a problem in the dilution system. Any such problem must be identified and corrected before proceeding. Using the calibration data for H_2S (developed under Section 10.3), determine the diluted calibration gas concentration in ppmv. Then calculate the dilution factor as the ratio of the calibration gas concentration before dilution to the diluted calibration gas concentration determined under this section. Repeat this procedure for each

stage of dilution required. Alternatively, the GC/FPD system may be calibrated by generating a series of three or more concentrations of each sulfur compound and diluting these samples before injecting them into the GC/FPD system. These data will then serve as the calibration data for the unknown samples and a separate determination of the dilution factor will not be necessary. However, the precision requirements are still applicable.

11.0 Analytical Procedure

Sample collection and analysis are concurrent for this method (see Section 8.0).

12.0 Data Analysis and Calculations

12.1 Nomenclature.

C = Concentration of permeant produced, ppmv.

COS = Carbonyl sulfide concentration, ppmv.

CS_2 = Carbon disulfide concentration, ppmv.

d = Dilution factor, dimensionless.

H_2S = Hydrogen sulfide concentration, ppmv.

K = 24.04 L/g mole. (Gas constant at 20°C and 760 mm Hg)

L = Flow rate, L/min, of air over permeant 20°C, 760 mm Hg.

M = Molecular weight of the permeant, g/g-mole.

N = Number of analyses performed.

P_r = Permeation rate of the tube, μg/min.

12.2 Permeant Concentration. Calculate the concentration generated by a tube containing a specific permeant (see Section 10.1) using the following equation:

$$C = \frac{K P_r}{M L} \qquad \text{Eq. 15-1}$$

12.3 Calculation of SO_2 Equivalent. SO_2 equivalent will be determined for each analysis made by summing the concentrations of each reduced sulfur compound resolved during the given analysis. The SO_2 equivalent is expressed as SO_2 in ppmv.

$$SO_2 \text{ equivalent}_i = \sum \left(H_2S, COS, 2CS_2\right) d \qquad \text{Eq. 15-2}$$

12.4 Average SO_2 Equivalent. This is determined using the following equation. Systems that do not remove moisture from the sample but condition the gas to prevent condensation must correct the average SO_2 equivalent for the fraction of water vapor present. This is not done under applications where the emission standard is not specified on a dry basis.

$$\text{Avg } SO_2 \text{ equivalent} = \frac{\sum_{i=1}^{n} SO_2 \text{ equivalent}_i}{N} \qquad \text{Eq. 15-3}$$

Where:

Avg SO_2 equivalent = Average SO_2 equivalent in ppmv, dry basis.

Average SO_2 equivalent $_i$ = SO_2 in ppmv as determined by Equation 15–2.

13.0 Method Performance

13.1 Range. Coupled with a GC system using a 1-ml sample size, the maximum limit of the FPD for each sulfur compound is approximately 10 ppmv. It may be necessary to dilute samples from sulfur recovery plants a hundredfold (99:1), resulting in an upper limit of about 1000 ppmv for each compound.

13.2 Sensitivity. The minimum detectable concentration of the FPD is also dependent on sample size and would be about 0.5 ppmv for a 1-ml sample.

13.3 Calibration Precision. A series of three consecutive injections of the same calibration gas, at any dilution, shall produce results which do not vary by more than 5 percent from the mean of the three injections.

13.4 Calibration Drift. The calibration drift determined from the mean of three injections made at the beginning and end of any run or series of runs within a 24-hour period shall not exceed 5 percent.

14.0 Pollution Prevention. [Reserved]

15.0 Waste Management. [Reserved]

16.0 References.

1. O'Keeffe, A.E., and G.C. Ortman. ''Primary Standards for Trace Gas Analysis.'' Anal. Chem. 38,760. 1966.

2. Stevens, R.K., A.E. O'Keeffe, and G.C. Ortman. ''Absolute Calibration of a Flame Photometric Detector to Volatile Sulfur Compounds at Sub-Part-Per-Million Levels.'' Environmental Science and Technology 3:7. July 1969.

3. Mulik, J.D., R.K. Stevens, and R. Baumgardner. ''An Analytical System Designed to Measure Multiple Malodorous Compounds Related to Kraft Mill Activities.'' Presented at the 12th Conference on Methods in Air Pollution and Industrial Hygiene Studies, University of Southern California, Los Angeles, CA, April 6–8, 1971.

4. Devonald, R.H., R.S. Serenius, and A.D. McIntyre. ''Evaluation of the Flame Photometric Detector for Analysis of Sulfur Compounds.'' Pulp and Paper Magazine of Canada, 73,3. March 1972.

5. Grimley, K.W., W.S. Smith, and R.M. Martin. ''The Use of a Dynamic Dilution System in the Conditioning of Stack Gases for Automated Analysis by a Mobile Sampling Van.'' Presented at the 63rd Annual APCA Meeting in St. Louis, MO. June 14–19, 1970.

6. General Reference. Standard Methods of Chemical Analysis Volume III–A and III–B: Instrumental Analysis. Sixth Edition. Van Nostrand Reinhold Co.

BILLING CODE 6560–50–P

17.0 Tables, Diagrams, Flowcharts, and Validation Data

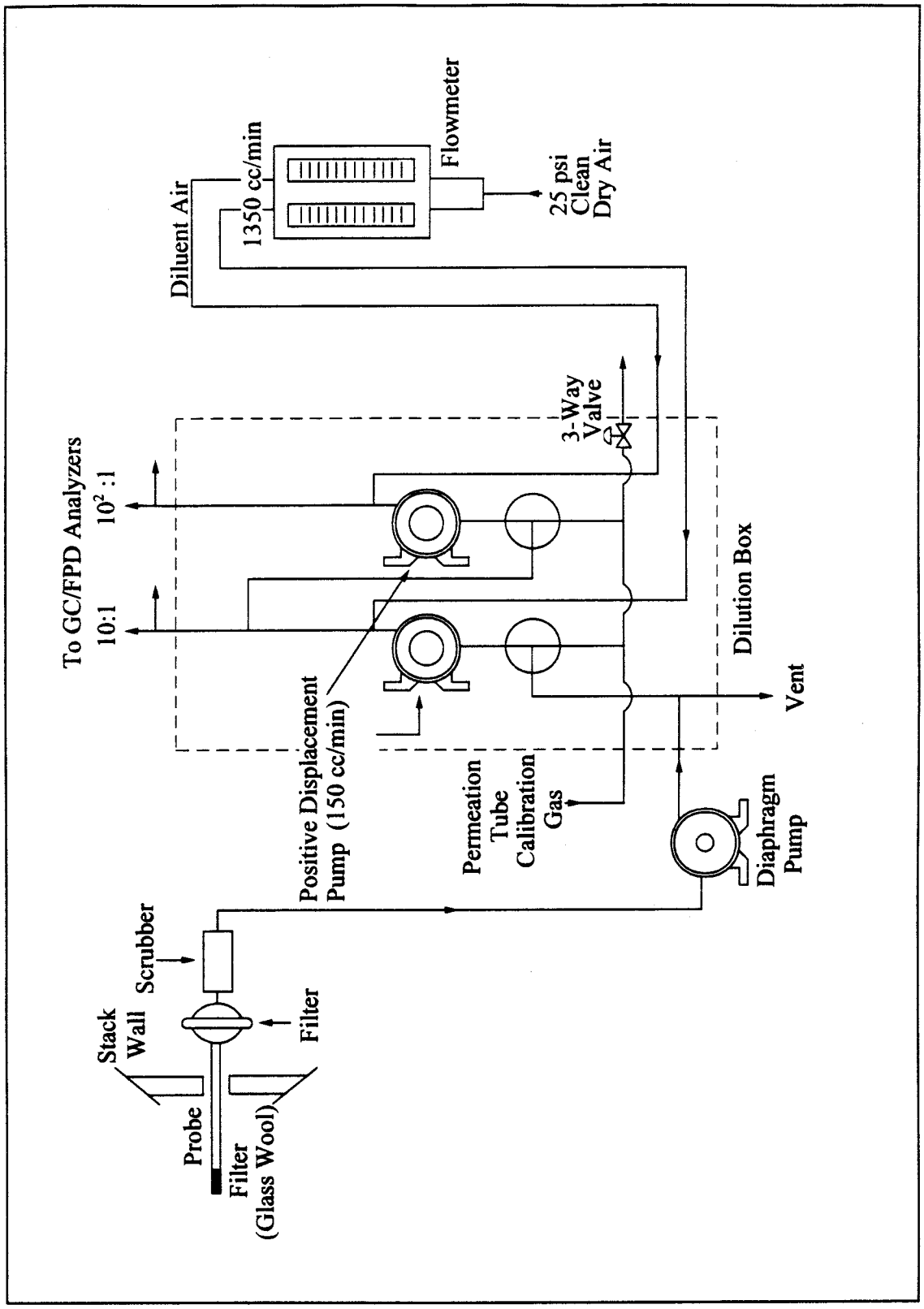

Figure 15-1. Sampling and Dilution Apparatus.

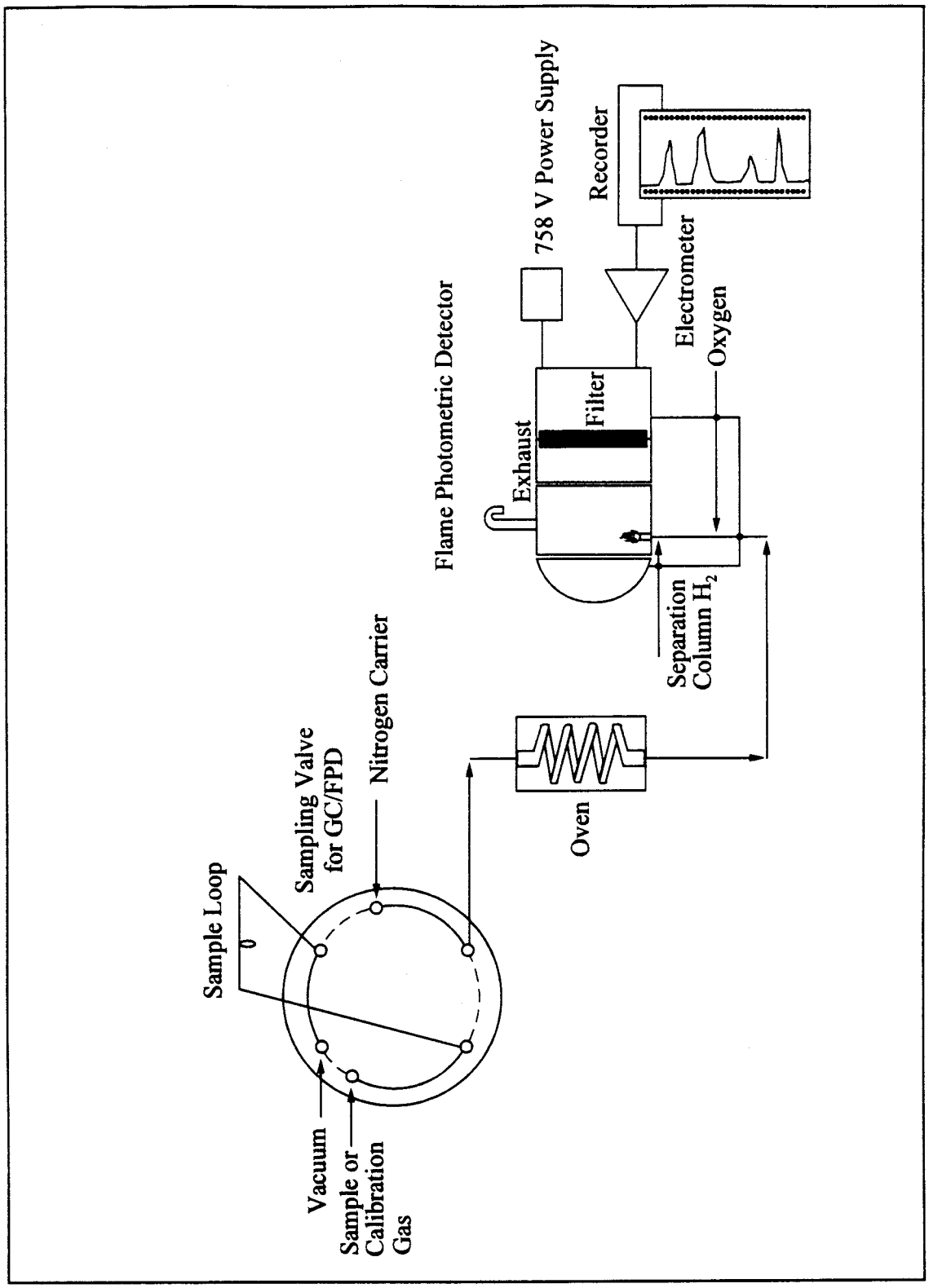

Figure 15-2. Gas Chromatographic Flame Photometric Analyzer.

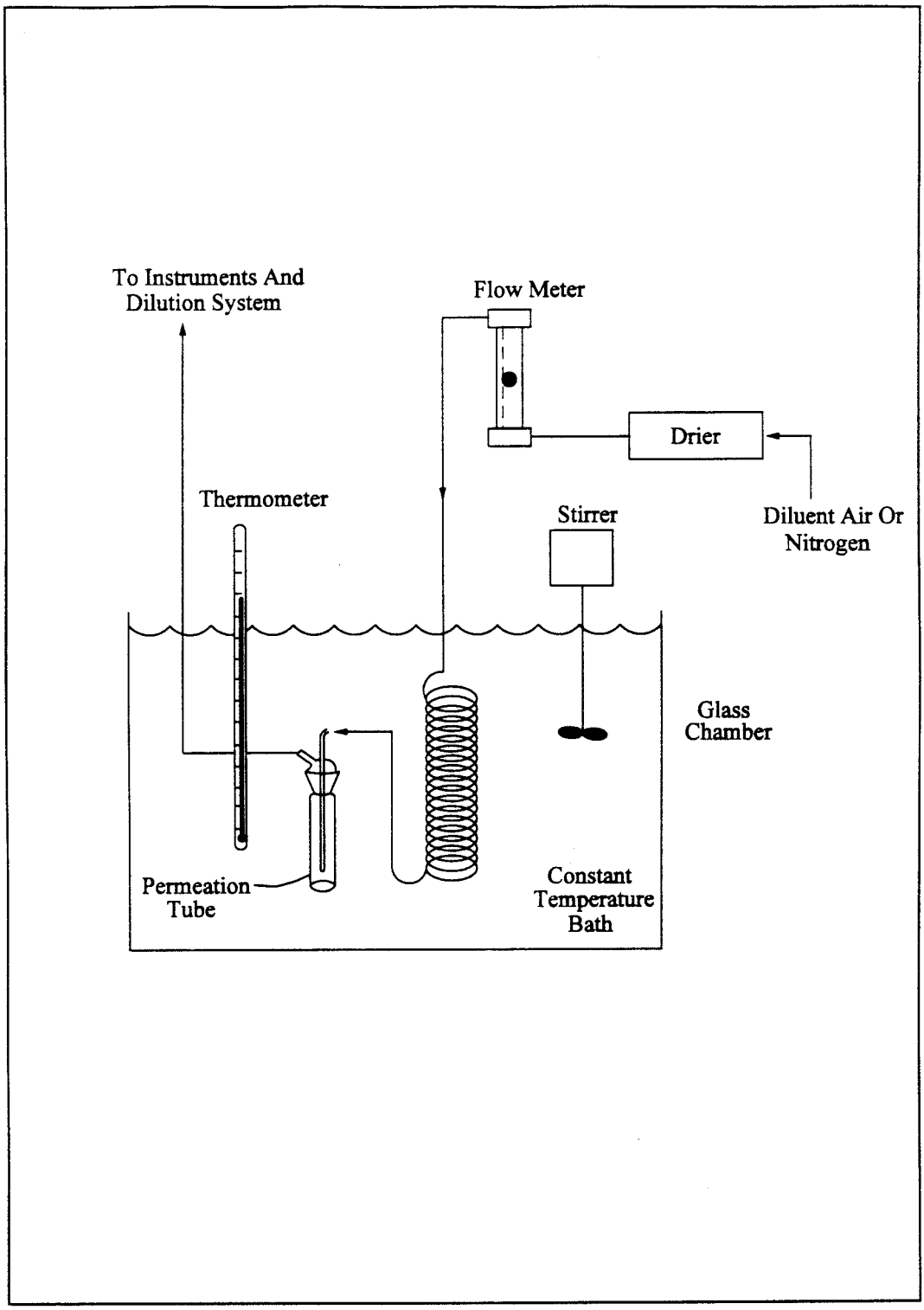

Figure 15-3. Apparatus for Field Calibration.

BILLING CODE 6560–50–C

Method 15A—Determination of Total Reduced Sulfur Emissions From Sulfur Recovery Plants in Petroleum Refineries

Note: This method does not include all of the specifications (*e.g.*, equipment and supplies) and procedures (*e.g.*, sampling and analytical) essential to its performance. Some material is incorporated by reference from other methods in this part. Therefore, to obtain reliable results, persons using this method should have a thorough knowledge of at least the following additional test methods: Method 1, Method 6, Method 15, and Method 16A.

1.0 Scope and Application

1.1 Analytes.

Analyte	CAS No.	Sensitivity
Reduced sulfur compounds	None assigned	Not determined.

1.2 Applicability. This method is applicable for the determination of emissions of reduced sulfur compounds from sulfur recovery plants where the emissions are in a reducing atmosphere, such as in Stretford units.

1.3 Data Quality Objectives. Adherence to the requirements of this method will enhance the quality of the data obtained from air pollutant sampling methods.

2.0 Summary of Method

2.1 An integrated gas sample is extracted from the stack, and combustion air is added to the oxygen (O_2)-deficient gas at a known rate. The reduced sulfur compounds [including carbon disulfide (CS_2), carbonyl sulfide (COS), and hydrogen sulfide (H_2S)] are thermally oxidized to sulfur dioxide (SO_2), which is then collected in hydrogen peroxide as sulfate ion and analyzed according to the Method 6 barium-thorin titration procedure.

3.0 Definitions. [Reserved]

4.0 Interferences

4.1 Reduced sulfur compounds, other than CS_2, COS, and H_2S, that are present in the emissions will also be oxidized to SO_2, causing a positive bias relative to emission standards that limit only the three compounds listed above. For example, thiophene has been identified in emissions from a Stretford unit and produced a positive bias of 30 percent in the Method 15A result. However, these biases may not affect the outcome of the test at units where emissions are low relative to the standard.

4.2 Calcium and aluminum have been shown to interfere in the Method 6 titration procedure. Since these metals have been identified in particulate matter emissions from Stretford units, a Teflon filter is required to minimize this interference.

4.3 Dilution of the hydrogen peroxide (H_2O_2) absorbing solution can potentially reduce collection efficiency, causing a negative bias. When used to sample emissions containing 7 percent moisture or less, the midget impingers have sufficient volume to contain the condensate collected during sampling. Dilution of the H_2O_2 does not affect the collection of SO_2. At higher moisture contents, the potassium citrate-citric acid buffer system used with Method 16A should be used to collect the condensate.

5.0 Safety

5.1 Disclaimer. This method may involve hazardous materials, operations, and equipment. This test method may not address all of the safety problems associated with its use. It is the responsibility of the user of this test method to establish appropriate safety and health practices and determine the applicability of regulatory limitations prior to performing this test method.

5.2 Corrosive reagents. The following reagents are hazardous. Personal protective equipment and safe procedures are useful in preventing chemical splashes. If contact occurs, immediately flush with copious amounts of water for at least 15 minutes. Remove clothing under shower and decontaminate. Treat residual chemical burns as thermal burns.

5.2.1 Hydrogen Peroxide (H_2O_2). Irritating to eyes, skin, nose, and lungs.

5.2.2 Sodium Hydroxide (NaOH). Causes severe damage to eyes and skin. Inhalation causes irritation to nose, throat, and lungs. Reacts exothermically with limited amounts of water.

5.2.3 Sulfuric Acid (H_2SO_4). Rapidly destructive to body tissue. Will cause third degree burns. Eye damage may result in blindness. Inhalation may be fatal from spasm of the larynx, usually within 30 minutes. May cause lung tissue damage with edema. 3 mg/m^3 will cause lung damage in uninitiated. 1 mg/m^3 for 8 hours will cause lung damage or, in higher concentrations, death. Provide ventilation to limit inhalation. Reacts violently with metals and organics.

6.0 Equipment and Supplies

6.1 Sample Collection. The sampling train used in performing this method is shown in Figure 15A–1, and component parts are discussed below. Modifications to this sampling train are acceptable provided that the system performance check is met.

6.1.1 Probe. 6.4-mm (¼-in.) OD Teflon tubing sequentially wrapped with heat-resistant fiber strips, a rubberized heating tape (with a plug at one end), and heat-resistant adhesive tape. A flexible thermocouple or some other suitable temperature-measuring device shall be placed between the Teflon tubing and the fiber strips so that the temperature can be monitored. The probe should be sheathed in stainless steel to provide in-stack rigidity. A series of bored-out stainless steel fittings placed at the front of the sheath will prevent flue gas from entering between the probe and sheath. The sampling probe is depicted in Figure 15A–2.

6.1.2 Particulate Filter. A 50-mm Teflon filter holder and a 1- to 2-mm porosity Teflon filter (available through Savillex Corporation, 5325 Highway 101, Minnetonka, Minnesota 55345). The filter holder must be maintained in a hot box at a temperature high enough to prevent condensation.

6.1.3 Combustion Air Delivery System. As shown in the schematic diagram in Figure 15A–3. The rate meter should be selected to measure an air flow rate of 0.5 liter/min (0.02 ft^3/min).

6.1.4 Combustion Tube. Quartz glass tubing with an expanded combustion chamber 2.54 cm (1 in.) in diameter and at least 30.5 cm (12 in.) long. The tube ends should have an outside diameter of 0.6 cm (¼ in.) and be at least 15.3 cm (6 in.) long. This length is necessary to maintain the quartz-glass connector near ambient temperature and thereby avoid leaks. Alternatively, the outlet may be constructed with a 90 degree glass elbow and socket that would fit directly onto the inlet of the first peroxide impinger.

6.1.5 Furnace. Of sufficient size to enclose the combustion tube. The furnace must have a temperature regulator capable of maintaining the temperature at 1100 ± 50 °C (2,012 ± 90 °F). The furnace operating temperature must be checked with a thermocouple to ensure accuracy. Lindberg furnaces have been found to be satisfactory.

6.1.6 Peroxide Impingers, Stopcock Grease, Temperature Sensor, Drying Tube, Valve, Pump, and Barometer. Same as in Method 6, Sections 6.1.1.2, 6.1.1.4, 6.1.1.5, 6.1.1.6, 6.1.1.7, 6.1.1.8, and 6.1.2, respectively, except that the midget bubbler of Method 6, Section 6.1.1.2 is not required.

6.1.7 Vacuum Gauge and Rate Meter. At least 760 mm Hg (30 in. Hg) gauge and rotameter, or equivalent, capable of measuring flow rate to ±5 percent of the selected flow rate and calibrated as in Section 10.2.

6.1.8 Volume Meter. Dry gas meter capable of measuring the sample volume under the particular sampling conditions with an accuracy of 2 percent.

6.1.9 U-tube manometer. To measure the pressure at the exit of the combustion gas dry gas meter.

6.2 Sample Recovery and Analysis. Same as Method 6, Sections 6.2 and 6.3, except a 10-ml buret with 0.05-ml graduations is required for titrant volumes of less than 10.0 ml, and the spectrophotometer is not needed.

7.0 Reagents and Standards

Note: Unless otherwise indicated, all reagents must conform to the specifications established by the Committee on Analytical Reagents of the American Chemical Society. When such specifications are not available, the best available grade shall be used.

7.1 Sample Collection. The following reagents and standards are required for sample analysis:

7.1.1 Water. Same as Method 6, Section 7.1.1.

7.1.2 Hydrogen Peroxide (H_2O_2), 3 Percent by Volume. Same as Method 6, Section 7.1.3 (40 ml is needed per sample).

7.1.3 Recovery Check Gas. Carbonyl sulfide in nitrogen [100 parts per million by volume (ppmv) or greater, if necessary] in an aluminum cylinder. Concentration certified by the manufacturer with an accuracy of ±2 percent or better, or verified by gas chromatography where the instrument is calibrated with a COS permeation tube.

7.1.4 Combustion Gas. Air, contained in a gas cylinder equipped with a two-stage regulator. The gas shall contain less than 50 ppb of reduced sulfur compounds and less than 10 ppm total hydrocarbons.

7.2 Sample Recovery and Analysis. Same as Method 6, Sections 7.2 and 7.3.

8.0 Sample Collection, Preservation, Storage, and Transport

8.1 Preparation of Sampling Train. For the Method 6 part of the train, measure 20 ml of 3 percent H_2O_2 into the first and second midget impingers. Leave the third midget impinger empty and add silica gel to the fourth impinger. Alternatively, a silica gel drying tube may be used in place of the fourth impinger. Place crushed ice and water around all impingers. Maintain the oxidation furnace at 1100 ± 50 °C (2,012 ± 90 °F) to ensure 100 percent oxidation of COS. Maintain the probe and filter temperatures at a high enough level (no visible condensation) to prevent moisture condensation and monitor the temperatures with a thermocouple.

8.2 Leak-Check Procedure. Assemble the sampling train and leak-check as described in Method 6, Section 8.2. Include the combustion air delivery system from the needle valve forward in the leak-check.

8.3 Sample Collection. Adjust the pressure on the second stage of the regulator on the combustion air cylinder to 10 psig. Adjust the combustion air flow rate to 0.5 ± 0.05 L/min (1.1 ± 0.1 ft^3/hr) before injecting combustion air into the sampling train. Then inject combustion air into the sampling train, start the sample pump, and open the stack sample gas valve. Carry out these three operations within 15 to 30 seconds to avoid pressurizing the sampling train. Adjust the total sample flow rate to 2.0 ± 0.2 L/min (4.2 ± 0.4 ft^3/hr). These flow rates produce an O_2 concentration of 5.0 percent in the stack gas, which must be maintained constantly to allow oxidation of reduced sulfur compounds to SO_2. Adjust these flow rates during sampling as necessary. Monitor and record the combustion air manometer reading at regular intervals during the sampling period. Sample for 1 or 3 hours. At the end of sampling, turn off the sample pump and combustion air simultaneously (within 30 seconds of each other). All other procedures are the same as in Method 6, Section 8.3, except that the sampling train should not be purged. After collecting the sample, remove the probe from the stack and conduct a leak-check according to the procedures outlined in Section 8.2 of Method 6 (mandatory). After each 3-hour test run (or after three 1-hour samples), conduct one system performance check (see Section 8.5). After this system performance check and before the next test run, it is recommended that the probe be rinsed and brushed and the filter replaced.

Note: In Method 15, a test run is composed of 16 individual analyses (injects) performed over a period of not less than 3 hours or more than 6 hours. For Method 15A to be consistent with Method 15, the following may be used to obtain a test run: (1) Collect three 60-minute samples or (2) collect one 3-hour sample. (Three test runs constitute a test.)

8.4 Sample Recovery. Recover the hydrogen peroxide-containing impingers as detailed in Method 6, Section 8.4.

8.5 System Performance Check.

8.5.1 A system performance check is done (1) to validate the sampling train components and procedure (before testing, optional) and (2) to validate a test run (after a run, mandatory). Perform a check in the field before testing consisting of at least two samples (optional), and perform an additional check after each 3–hour run or after three 1–hour samples (mandatory).

8.5.2 The checks involve sampling a known concentration of COS and comparing the analyzed concentration with the known concentration. Mix the recovery gas with N_2 as shown in Figure 15A–4 if dilution is required. Adjust the flow rates to generate a COS concentration in the range of the stack gas or within 20 percent of the applicable standard at a total flow rate of at least 2.5 L/min (5.3 ft^3/hr). Use Equation 15A–4 (see Section 12.5) to calculate the concentration of recovery gas generated. Calibrate the flow rate from both sources with a soap bubble flow tube so that the diluted concentration of COS can be accurately calculated. Collect 30–minute samples, and analyze in the same manner as the emission samples. Collect the samples through the probe of the sampling train using a manifold or some other suitable device that will ensure extraction of a representative sample.

8.5.3 The recovery check must be performed in the field before replacing the particulate filter and before cleaning the probe. A sample recovery of 100 ± 20 percent must be obtained for the data to be valid and should be reported with the emission data, but should not be used to correct the data. However, if the performance check results do not affect the compliance or noncompliance status of the affected facility, the Administrator may decide to accept the results of the compliance test. Use Equation 15A–5 (see Section 12.6) to calculate the recovery efficiency.

9.0 Quality Control

Section	Quality control measure	Effect
8.5	System performance check	Ensures validity of sampling train components and analytical procedure.
8.2, 10.0	Sampling equipment leak-check and calibration	Ensures accurate measurement of stack gas flow rate, sample volume
10.0	Barium standard solution standardization	Ensures precision of normality determination.
11.1	Replicate titrations	Ensures precision of titration determinations.
11.2	Audit sample analysis	Evaluates analyst's technique and standards preparation.

10.0 Calibration and Standardization

10.1 Metering System, Temperature Sensors, Barometer, and Barium Perchlorate Solution. Same as Method 6, Sections 10.1, 10.2, 10.4, and 10.5, respectively.

10.2 Rate Meter. Calibrate with a bubble flow tube.

11.0 Analytical Procedure

11.1 Sample Loss Check and Sample Analysis. Same as Method 6, Sections 11.1 and 11.2.

11.2 Audit Sample Analysis. Same as Method 6, Section 11.3.

12.0 Data Analysis and Calculations

In the calculations, retain at least one extra decimal figure beyond that of the acquired data. Round off figures after final calculations.

12.1 Nomenclature.

C_{COS} = Concentration of COS recovery gas, ppm.

$C_{RG(act)}$ = Actual concentration of recovery check gas (after dilution), ppm.

$C_{RG(m)}$ = Measured concentration of recovery check gas generated, ppm.

C_{RS} = Concentration of reduced sulfur compounds as SO_2, dry basis, corrected to standard conditions, ppm.

N = Normality of barium perchlorate titrant, milliequivalents/ml.

P_{bar} = Barometric pressure at exit orifice of the dry gas meter, mm Hg.

P_{std} = Standard absolute pressure, 760 mm Hg.

Q_{COS} = Flow rate of COS recovery gas, liters/min.

Q_N = Flow rate of diluent N_2, liters/min.

R = Recovery efficiency for the system performance check, percent.

T_m = Average dry gas meter absolute temperature, °K.

T_{std} = Standard absolute temperature, 293 °K.

V_a = Volume of sample aliquot titrated, ml.

V_{ms} = Dry gas volume as measured by the sample train dry gas meter, liters.

V_{mc} = Dry gas volume as measured by the combustion air dry gas meter, liters.

$V_{ms(std)}$ = Dry gas volume measured by the sample train dry gas meter, corrected to standard conditions, liters.

$V_{mc(std)}$ = Dry gas volume measured by the combustion air dry gas meter, corrected to standard conditions, liters.

V_{soln} = Total volume of solution in which the sulfur dioxide sample is contained, 100 ml.

V_t = Volume of barium perchlorate titrant used for the sample (average of replicate titrations), ml.

V_{tb} = Volume of barium perchlorate titrant used for the blank, ml.

Y = Calibration factor for sampling train dry gas meter.

Y_c = Calibration factor for combustion air dry gas meter.

32.03 = Equivalent weight of sulfur dioxide, mg/meq.

$$12025\frac{\mu l}{meq} = \frac{(32.03\,mg)}{meq}\frac{(24.051)}{mole}\frac{(mole)(lg)(10^3\,ml)(10^3\,\mu l)}{(64.06g)(10^3\,mg)(l)(ml)}$$

12.2 Dry Sample Gas Volume, Corrected to Standard Conditions.

$$V_{m(std)} = V_{ms}\,Y\,\frac{T_{std}\,P_{bar}}{T_m\,P_{std}} \qquad \text{Eq. 15A-1}$$

$$= K_1 Y\,\frac{V_m\,P_{bar}}{T_m}$$

Where:

K_1 = 0.3855 °K/mm Hg for metric units,

= 17.65 °R/in. Hg for English units.

12.3 Combustion Air Gas Volume, corrected to Standard Conditions.

$$V_{mc(std)} = k_1 Y_c\,\frac{(V_{mc})(P_{bar})}{T_m} \qquad \text{Eq. 15A-2}$$

NOTE: Correct P_{bar} for the average pressure of the manometer during the sampling period.

12.4 Concentration of reduced sulfur compounds as ppm SO_2.

$$C_{RS} = K_2\,N\,\frac{(V_t - V_{tb})(V_{soln}/V_a)}{V_{ms(std)} - V_{mc(std)}} \qquad \text{Eq. 15A-3}$$

Where:

$$K_2 = 32.03 \frac{mg}{meq} \frac{24.05\ l}{mole} \frac{1\,mole}{64.06\,g} \frac{1\,g}{10^3\,mg} \frac{10^3\,ml}{l} \frac{10^3\,\mu l}{l\,ml}$$
$$= \frac{12025\,ml}{meq}$$

12.5 Concentration of Generated Recovery Gas.

$$C_{RG} = \frac{(C_{cos})(Q_{cos})}{Q_{cos} + Q_{N_2}} \qquad \text{Eq. 15A-4}$$

12.6 Recovery Efficiency for the System Performance Check.

$$R = \frac{C_{RG(m)}}{C_{RG(act)}} \times 100 \qquad \text{Eq. 15A-5}$$

13.0 Method Performance

13.1 Analytical Range. The lower detectable limit is 0.1 ppmv when sampling at 2 lpm for 3 hours or 0.3 ppmv when sampling at 2 lpm for 1 hour. The upper concentration limit of the method exceeds concentrations of reduced sulfur compounds generally encountered in sulfur recovery plants.

13.2 Precision. Relative standard deviations of 2.8 and 6.9 percent have been obtained when sampling a stream with a reduced sulfur compound concentration of 41 ppmv as SO_2 for 1 and 3 hours, respectively.

13.3 Bias. No analytical bias has been identified. However, results obtained with this method are likely to contain a positive bias relative to emission regulations due to the presence of nonregulated sulfur compounds (that are present in petroleum) in the emissions. The magnitude of this bias varies accordingly, and has not been quantified.

14.0 Pollution Prevention. [Reserved]

15.0 Waste Management. [Reserved]

16.0 References

1. American Society for Testing and Materials Annual Book of ASTM Standards. Part 31: Water, Atmospheric Analysis. Philadelphia, Pennsylvania. 1974. pp. 40–42.

2. Blosser, R.O., H.S. Oglesby, and A.K. Jain. A Study of Alternate SO_2 Scrubber Designs Used for TRS Monitoring. National Council of the Paper Industry for Air and Stream Improvement, Inc., New York, New York. Special Report 77–05. July 1977.

3. Curtis, F., and G.D. McAlister. Development and Evaluation of an Oxidation/Method 6 TRS Emission Sampling Procedure. Emission Measurement Branch, Emission Standards and Engineering Division, U.S. Environmental Protection Agency, Research Triangle Park, North Carolina. February 1980.

4. Gellman, I. A Laboratory and Field Study of Reduced Sulfur Sampling and Monitoring Systems. National Council of the Paper Industry for Air and Stream Improvement, Inc., New York, New York. Atmospheric Quality Improvement Technical Bulletin No. 81. October 1975.

5. Margeson, J.H., et al. A Manual Method for TRS Determination. Journal of Air Pollution Control Association. 35:1280–1286. December 1985.

BILLING CODE 6560–60–P

17.0 Tables, Diagrams, Flowcharts, and Validation Data

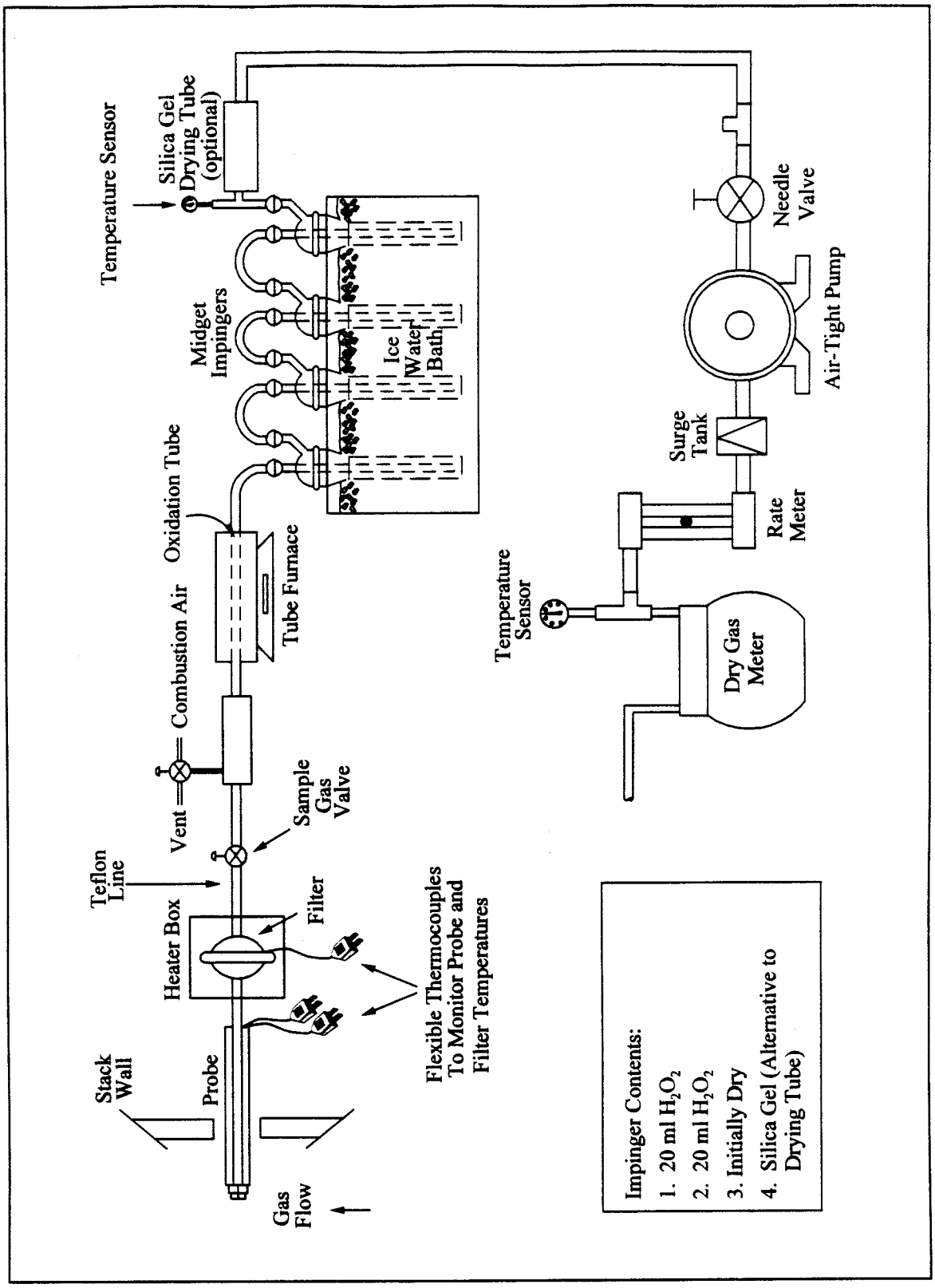

Figure 15A-1. Method 15A Sampling Train.

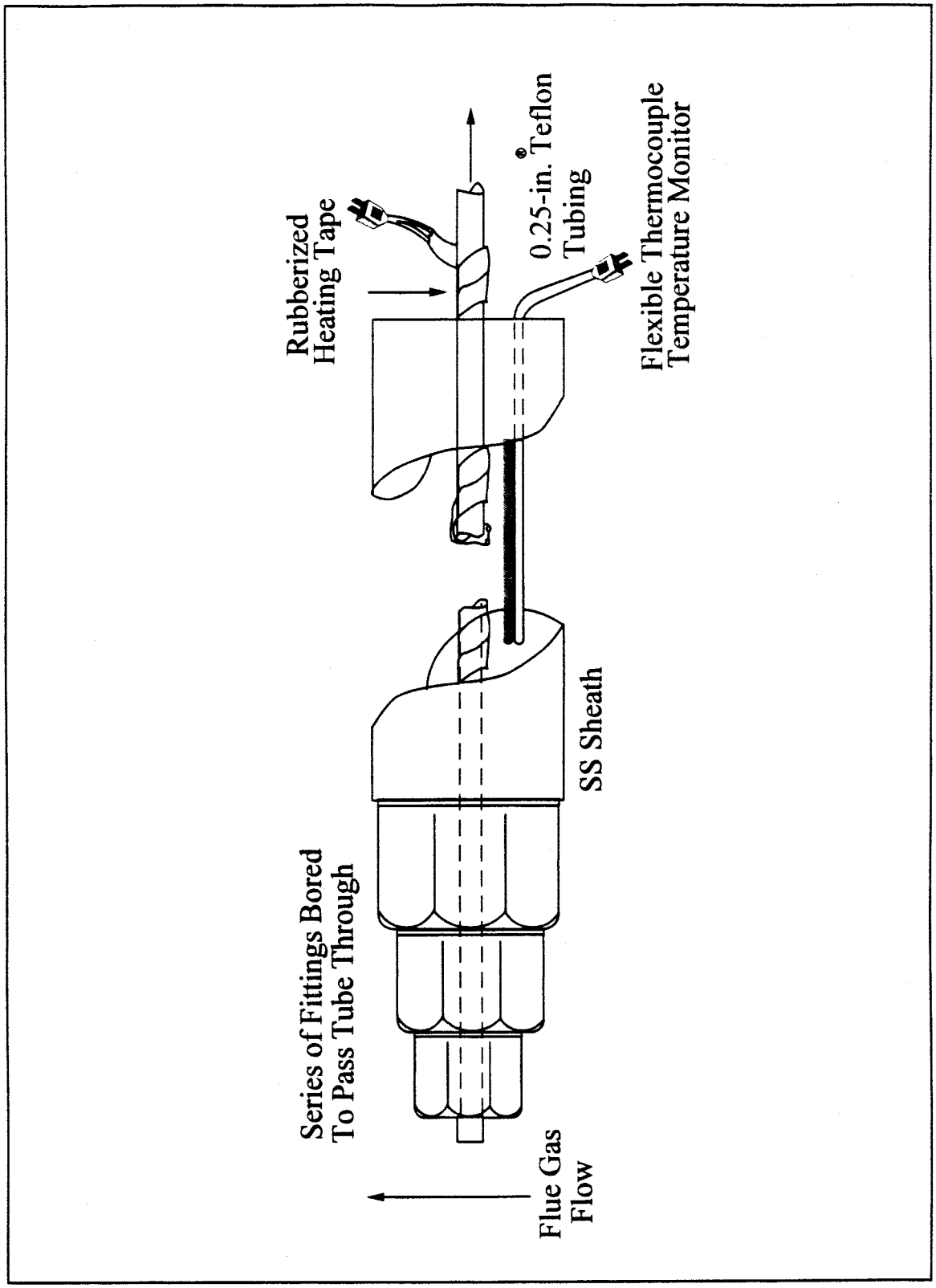

Figure 15A-2. Method 15A Sampling Probe.

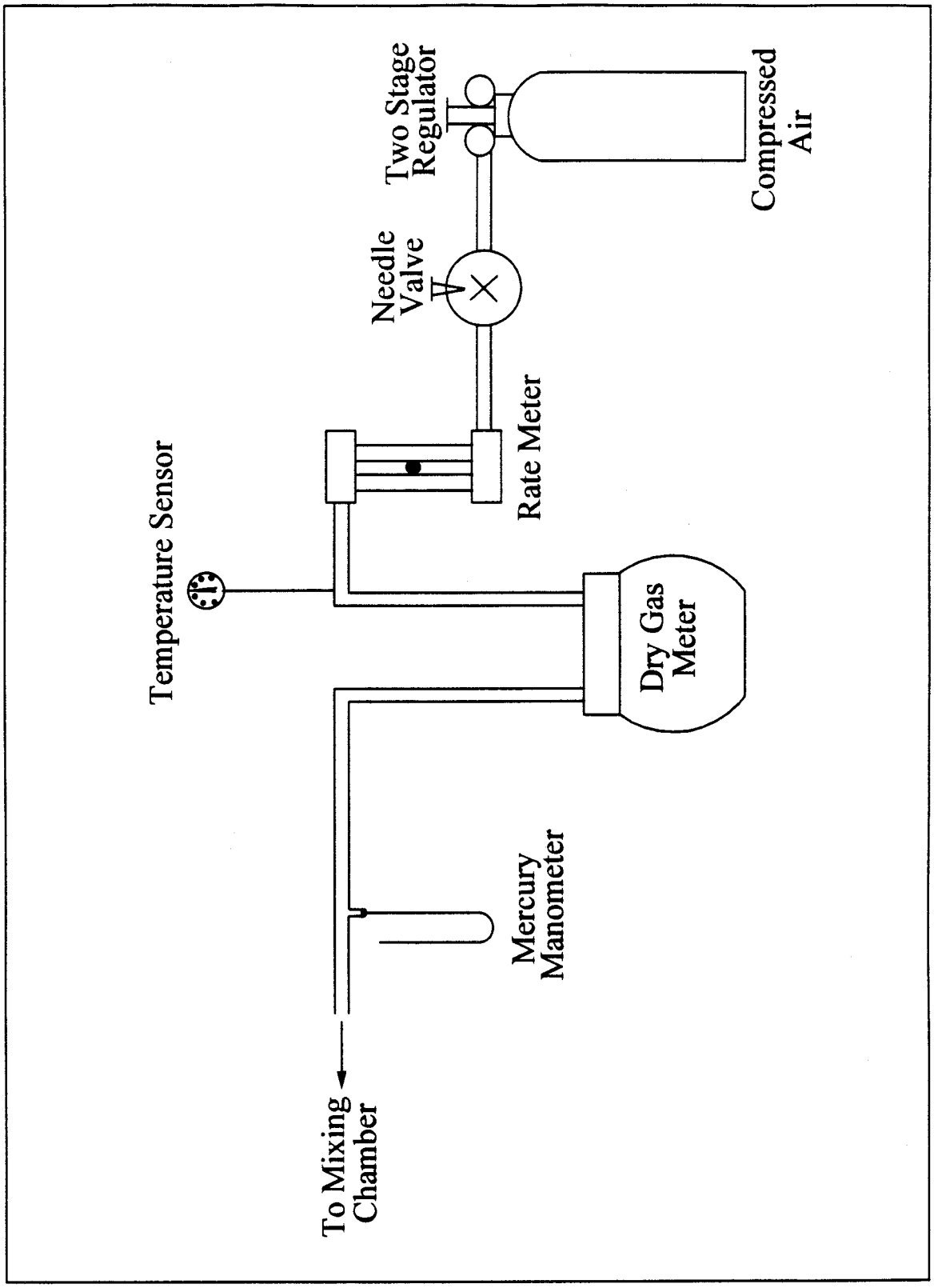

Figure 15A-3. Combustion Air Delivery System.

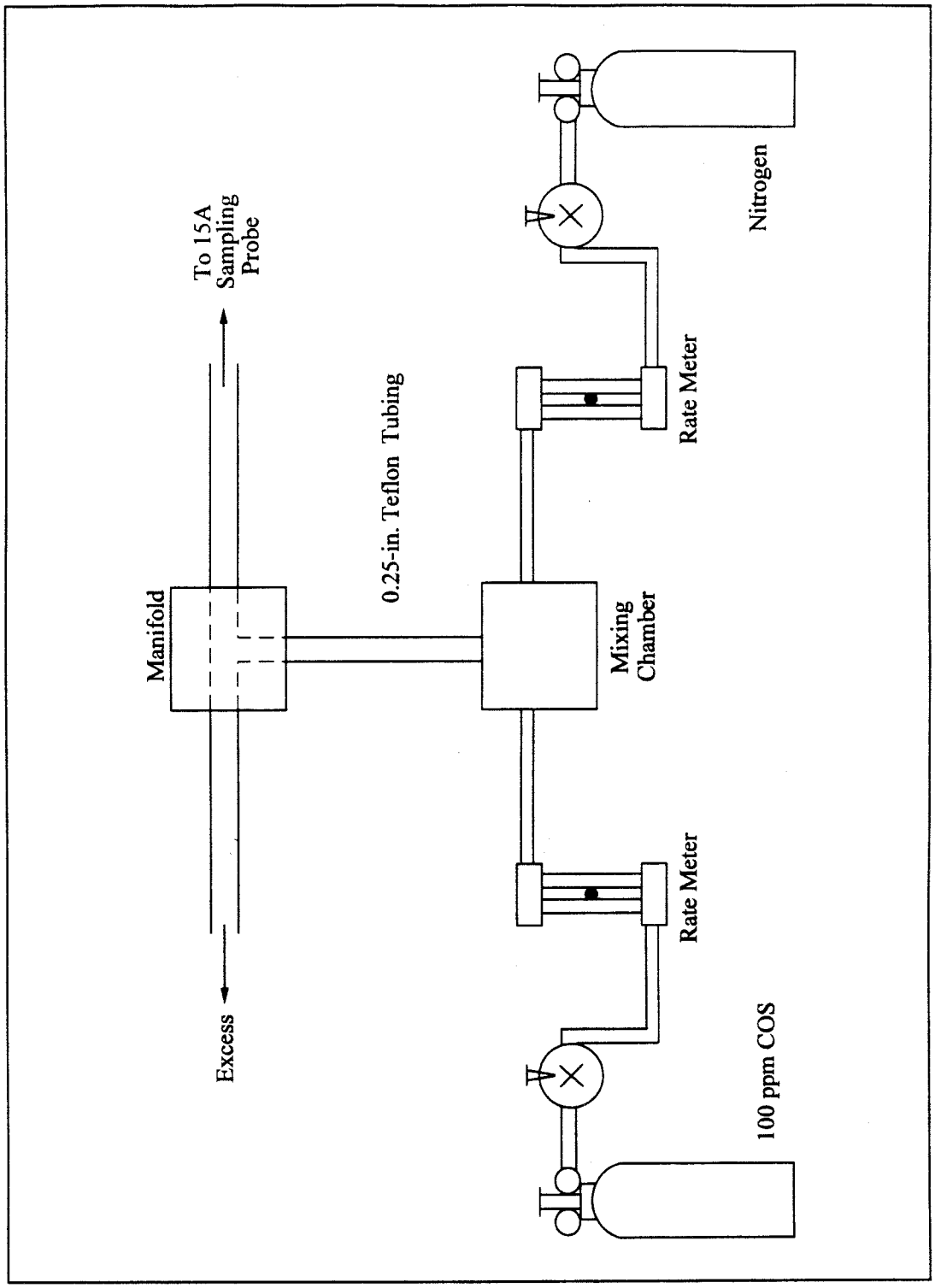

Figure 15A-4. Recovery Gas Generator System.

BILLING CODE 6560–50–C

Method 16—Semicontinuous Determination of Sulfur Emissions From Stationary Sources

Note: This method does not include all of the specifications (*e.g.,* equipment and supplies) and procedures (*e.g.,* sampling and analytical) essential to its performance. Some material is incorporated by reference from other methods in this part. Therefore, to obtain reliable results, persons using this method should have a thorough knowledge of at least the following additional test methods: Method 1, Method 4, Method 15, and Method 16A.

1.0 Scope and Application

1.1 Analytes.

Analyte	CAS No.	Sensitivity
Dimethyl disulfide [$(CH_3)_2S_2$]	62–49–20	50 ppb.
Dimethyl sulfide [$(CH_3)_2S$]	75–18–3	50 ppb.
Hydrogen sulfide [H_2S]	7783–06–4	50 ppb.
Methyl mercaptan [CH_4S]	74–93–1	50 ppb.

1.2 Applicability. This method is applicable for the determination of total reduced sulfur (TRS) compounds from recovery furnaces, lime kilns, and smelt dissolving tanks at kraft pulp mills and fuel gas combustion devices at petroleum refineries.

Note: The method described below uses the principle of gas chromatographic (GC) separation and flame photometric detection (FPD). Since there are many systems or sets of operating conditions that represent useable methods of determining sulfur emissions, all systems which employ this principle, but differ only in details of equipment and operation, may be used as alternative methods, provided that the calibration precision and sample line loss criteria are met.

1.3 Data Quality Objectives. Adherence to the requirements of this method will enhance the quality of the data obtained from air pollutant sampling methods.

2.0 Summary of Method

2.1 A gas sample is extracted from the emission source and an aliquot is analyzed for hydrogen sulfide (H_2S), methyl mercaptan (MeSH), dimethyl sulfide (DMS), and dimethyl disulfide (DMDS) by GC/FPD. These four compounds are known collectively as TRS.

3.0 Definitions. [Reserved]

4.0 Interferences

4.1 Moisture. Moisture condensation in the sample delivery system, the analytical column, or the FPD burner block can cause losses or interferences. This is prevented by maintaining the probe, filter box, and connections at a temperature of at least 120 °C (248 °F). Moisture is removed in the SO_2 scrubber and heating the sample beyond this point is not necessary when the ambient temperature is above 0 °C (32 °F). Alternatively, moisture may be eliminated by heating the sample line, and by conditioning the sample with dry dilution air to lower its dew point below the operating temperature of the GC/FPD analytical system prior to analysis.

4.2 Carbon Monoxide (CO) and Carbon Dioxide (CO_2). CO and CO_2 have a substantial desensitizing effect on the flame photometric detector even after dilution. Acceptable systems must demonstrate that they have eliminated this interference by some procedure such as eluting these compounds before any of the compounds to be measured. Compliance with this requirement can be demonstrated by submitting chromatograms of calibration gases with and without CO_2 in the diluent gas. The CO_2 level should be approximately 10 percent for the case with CO_2 present. The two chromatograms should show agreement within the precision limits of Section 10.2.

4.3 Particulate Matter. Particulate matter in gas samples can cause interference by eventual clogging of the analytical system. This interference is eliminated by using the Teflon filter after the probe.

4.4 Sulfur Dioxide (SO_2). Sulfur dioxide is not a specific interferant but may be present in such large amounts that it cannot effectively be separated from the other compounds of interest. The SO_2 scrubber described in Section 6.1.3 will effectively remove SO_2 from the sample.

5.0 Safety

5.1 Disclaimer. This method may involve hazardous materials, operations, and equipment. This test method may not address all of the safety problems associated with its use. It is the responsibility of the user of this test method to establish appropriate safety and health practices and determine the applicability of regulatory limitations prior to performing this test method.

5.2 Hydrogen Sulfide. A flammable, poisonous gas with the odor of rotten eggs. H_2S is extremely hazardous and can cause collapse, coma, and death within a few seconds of one or two inhalations at sufficient concentrations. Low concentrations irritate the mucous membranes and may cause nausea, dizziness, and headache after exposure.

6.0 Equipment and Supplies

6.1. Sample Collection. The following items are needed for sample collection.

6.1.1 Probe. Teflon or Teflon-lined stainless steel. The probe must be heated to prevent moisture condensation. It must be designed to allow calibration gas to enter the probe at or near the sample point entry. Any portion of the probe that contacts the stack gas must be heated to prevent moisture condensation. Figure 16–1 illustrates the probe used in lime kilns and other sources where significant amounts of particulate matter are present. The probe is designed with the deflector shield placed between the sample and the gas inlet holes to reduce clogging of the filter and possible adsorption of sample gas. As an alternative, the probe described in Section 6.1.1 of Method 16A having a nozzle directed away from the gas stream may be used at sources having significant amounts of particulate matter.

6.1.2 Particulate Filter. 50–mm Teflon filter holder and a 1- to 2-micron porosity Teflon filter (available through Savillex Corporation, 5325 Highway 101, Minnetonka, Minnesota 55343). The filter holder must be maintained in a hot box at a temperature of at least 120 °C (248 °F).

6.1.3 SO_2 Scrubber. Three 300-ml Teflon segmented impingers connected in series with flexible, thick-walled, Teflon tubing. (Impinger parts and tubing available through Savillex.) The first two impingers contain 100 ml of citrate buffer and the third impinger is initially dry. The tip of the tube inserted into the solution should be constricted to less than 3 mm (⅛ in.) ID and should be immersed to a depth of at least 5 cm (2 in.). Immerse the impingers in an ice water bath and maintain near 0 °C (32 °F). The scrubber solution will normally last for a 3-hour run before needing replacement. This will depend upon the

effects of moisture and particulate matter on the solution strength and pH. Connections between the probe, particulate filter, and SO_2 scrubber must be made of Teflon and as short in length as possible. All portions of the probe, particulate filter, and connections prior to the SO_2 scrubber (or alternative point of moisture removal) must be maintained at a temperature of at least 120 °C (248 °F).

6.1.4 Sample Line. Teflon, no greater than 1.3 cm (½ in.) ID. Alternative materials, such as virgin Nylon, may be used provided the line loss test is acceptable.

6.1.5 Sample Pump. The sample pump must be a leakless Teflon-coated diaphragm type or equivalent.

6.2 Analysis. The following items are needed for sample analysis:

6.2.1 Dilution System. Needed only for high sample concentrations. The dilution system must be constructed such that all sample contacts are made of Teflon, glass, or stainless steel.

6.2.2 Gas Chromatograph. The gas chromatograph must have at least the following components:

6.2.2.1 Oven. Capable of maintaining the separation column at the proper operating temperature ± 1 °C (2 °F).

6.2.2.2 Temperature Gauge. To monitor column oven, detector, and exhaust temperature ± 1 °C (2 °F).

6.2.2.3 Flow System. Gas metering system to measure sample, fuel, combustion gas, and carrier gas flows.

6.2.2.4 Flame Photometric Detector.

6.2.2.4.1 Electrometer. Capable of full scale amplification of linear ranges of 10^{-9} to 10^{-4} amperes full scale.

6.2.2.4.2 Power Supply. Capable of delivering up to 750 volts.

6.2.2.4.3 Recorder. Compatible with the output voltage range of the electrometer.

6.2.2.4.4 Rotary Gas Valves. Multiport Teflon-lined valves equipped with sample loop. Sample loop volumes must be chosen to provide the needed analytical range. Teflon tubing and fittings must be used throughout to present an inert surface for sample gas. The gas chromatograph must be calibrated with the sample loop used for sample analysis.

6.2.3 Gas Chromatogram Columns. The column system must be demonstrated to be capable of resolving the four major reduced sulfur compounds: H_2S, MeSH, DMS, and DMDS. It must also demonstrate freedom from known interferences. To demonstrate that adequate resolution has been achieved, submit a chromatogram of a calibration gas containing all four of the TRS compounds in the concentration range of the applicable standard. Adequate resolution will be defined as base line separation of adjacent peaks when the amplifier attenuation is set so that the smaller peak is at least 50 percent of full scale. Baseline separation is defined as a return to zero ±5 percent in the interval between peaks. Systems not meeting this criteria may be considered alternate methods subject to the approval of the Administrator.

6.3 Calibration. A calibration system, containing the following components, is required (see Figure 16–2).

6.3.1 Tube Chamber. Chamber of glass or Teflon of sufficient dimensions to house permeation tubes.

6.3.2 Flow System. To measure air flow over permeation tubes at ±2 percent. Flow over the permeation device may also be determined using a soap bubble flowmeter.

6.3.3 Constant Temperature Bath. Device capable of maintaining the permeation tubes at the calibration temperature within 0.1 °C (0.2 °F).

6.3.4 Temperature Gauge. Thermometer or equivalent to monitor bath temperature within 1 °C (2 °F).

7.0 Reagents and Standards

7.1 Fuel. Hydrogen (H_2), prepurified grade or better.

7.2 Combustion Gas. Oxygen (O_2) or air, research purity or better.

7.3 Carrier Gas. Prepurified grade or better.

7.4 Diluent (if required). Air containing less than 50 ppb total sulfur compounds and less than 10 ppmv each of moisture and total hydrocarbons.

7.5 Calibration Gases

7.5.1 Permeation tubes, one each of H_2S, MeSH, DMS, and DMDS, gravimetrically calibrated and certified at some convenient operating temperature. These tubes consist of hermetically sealed FEP Teflon tubing in which a liquified gaseous substance is enclosed. The enclosed gas permeates through the tubing wall at a constant rate. When the temperature is constant, calibration gases covering a wide range of known concentrations can be generated by varying and accurately measuring the flow rate of diluent gas passing over the tubes. These calibration gases are used to calibrate the GC/FPD system and the dilution system.

7.5.2 Cylinder Gases. Cylinder gases may be used as alternatives to permeation devices. The gases must be traceable to a primary standard (such as permeation tubes) and not used beyond the certification expiration date.

7.6 Citrate Buffer and Sample Line Loss Gas. Same as Method 15, Sections 7.6 and 7.7.

8.0 Sample Collection, Preservation, Storage, and Transport

Same as Method 15, Section 8.0, except that the references to the dilution system may not be applicable.

9.0 Quality Control

Section	Quality control measure	Effect
8.0	Sample line loss check	Ensures that uncorrected negative bias introduced by sample loss is no greater than 20 percent, and provides for correction of bias of 20 percent or less.
8.0	Calibration drift test	Ensures that bias introduced by drift in the measurement system output during the run is no greater than 5 percent.
10.0	Analytical calibration	Ensures precision of analytical results within 5 percent.

10.0 Calibration and Standardization

Same as Method 15, Section 10.0, with the following addition and exceptions:

10.1 Use the four compounds that comprise TRS instead of the three reduced sulfur compounds measured by Method 15.

10.2 Flow Meter. Calibration before each test run is recommended, but not required; calibration following each test series is mandatory. Calibrate each flow meter after each complete test series with a wet-test meter. If the flow measuring device differs from the wet-test meter by 5 percent or more, the completed test runs must be voided. Alternatively, the flow data that yield the lower flow measurement may be used. Flow over the permeation device may also be determined using a soap bubble flowmeter.

11.0 Analytical Procedure

Sample collection and analysis are concurrent for this method (see Section 8.0).

12.0 Data Analysis and Calculations

12.1 Concentration of Reduced Sulfur Compounds. Calculate the average concentration of each of the four analytes (*i.e.*, DMDS, DMS, H_2S, and MeSH) over the sample run (specified in Section 8.2 of Method 15 as 16 injections).

$$C = \frac{\sum_{i=1}^{N} S_i}{N} \qquad \text{Eq. 16-1}$$

Where:

S_i = Concentration of any reduced sulfur compound from the ith sample injection, ppm.
C = Average concentration of any one of the reduced sulfur compounds for the entire run, ppm.
N = Number of injections in any run period.

12.2 TRS Concentration. Using Equation 16–2, calculate the TRS concentration for each sample run.

$$C_{TRS} = d\sum\left(C_{H_2S} + C_{MeSH} + C_{DMS} + 2C_{DMDS}\right) \qquad \text{Eq. 16-2}$$

Where:

C_{TRS} = TRS concentration, ppmv.
C_{H2S} = Hydrogen sulfide concentration, ppmv.
C_{MeSH} = Methyl mercaptan concentration, ppmv.
C_{DMS} = Dimethyl sulfide concentration, ppmv.
C_{DMDS} = Dimethyl disulfide concentration, ppmv.
d = Dilution factor, dimensionless.

12.3 Average TRS Concentration. Calculate the average TRS concentration for all sample runs performed.

$$\text{Average TRS} = \frac{\sum_{i=1}^{n} TRS_i}{N\left(1 - B_{wo}\right)} \qquad \text{Eq. 16-3}$$

Where:

Average TRS = Average total reduced sulfur in ppm.
TRS_i = Total reduced sulfur in ppm as determined by Equation 16–2.
N = Number of samples.
B_{wo} = Fraction of volume of water vapor in the gas stream as determined by Method 4—Determination of Moisture in Stack Gases.

13.0 Method Performance

13.1 Analytical Range. The analytical range will vary with the sample loop size. Typically, the analytical range may extend from 0.1 to 100 ppmv using 10- to 0.1-ml sample loop sizes. This eliminates the need for sample dilution in most cases.

13.2 Sensitivity. Using the 10-ml sample size, the minimum detectable concentration is approximately 50 ppb.

14.0 Pollution Prevention. [Reserved]

15.0 Waste Management. [Reserved]

16.0 References

1. O'Keeffe, A.E., and G.C. Ortman. ''Primary Standards for Trace Gas Analysis.'' Analytical Chemical Journal, 38,76. 1966.

2. Stevens, R.K., A.E. O'Keeffe, and G.C. Ortman. ''Absolute Calibration of a Flame Photometric Detector to Volatile Sulfur Compounds at Sub-Part-Per-Million Levels.'' Environmental Science and Technology, 3:7. July 1969.

3. Mulik, J.D., R.K. Stevens, and R. Baumgardner. ''An Analytical System Designed to Measure Multiple Malodorous Compounds Related to Kraft Mill Activities.'' Presented at the 12th Conference on Methods in Air Pollution and Industrial Hygiene Studies, University of Southern California, Los Angeles, CA. April 6–8, 1971.

4. Devonald, R.H., R.S. Serenius, and A.D. McIntyre. ''Evaluation of the Flame Photometric Detector for Analysis of Sulfur Compounds.'' Pulp and Paper Magazine of Canada, 73,3. March 1972.

5. Grimley, K.W., W.S. Smith, and R.M. Martin. ''The Use of a Dynamic Dilution System in the Conditioning of Stack Gases for Automated Analysis by a Mobile Sampling Van.'' Presented at the 63rd Annual APCA Meeting, St. Louis, MO. June 14–19, 1970.

6. General Reference. Standard Methods of Chemical Analysis, Volumes III–A and III–B Instrumental Methods. Sixth Edition. Van Nostrand Reinhold Co.

BILLING CODE 6560–50–P

17.0 Tables, Diagrams, Flowcharts, and Validation Data

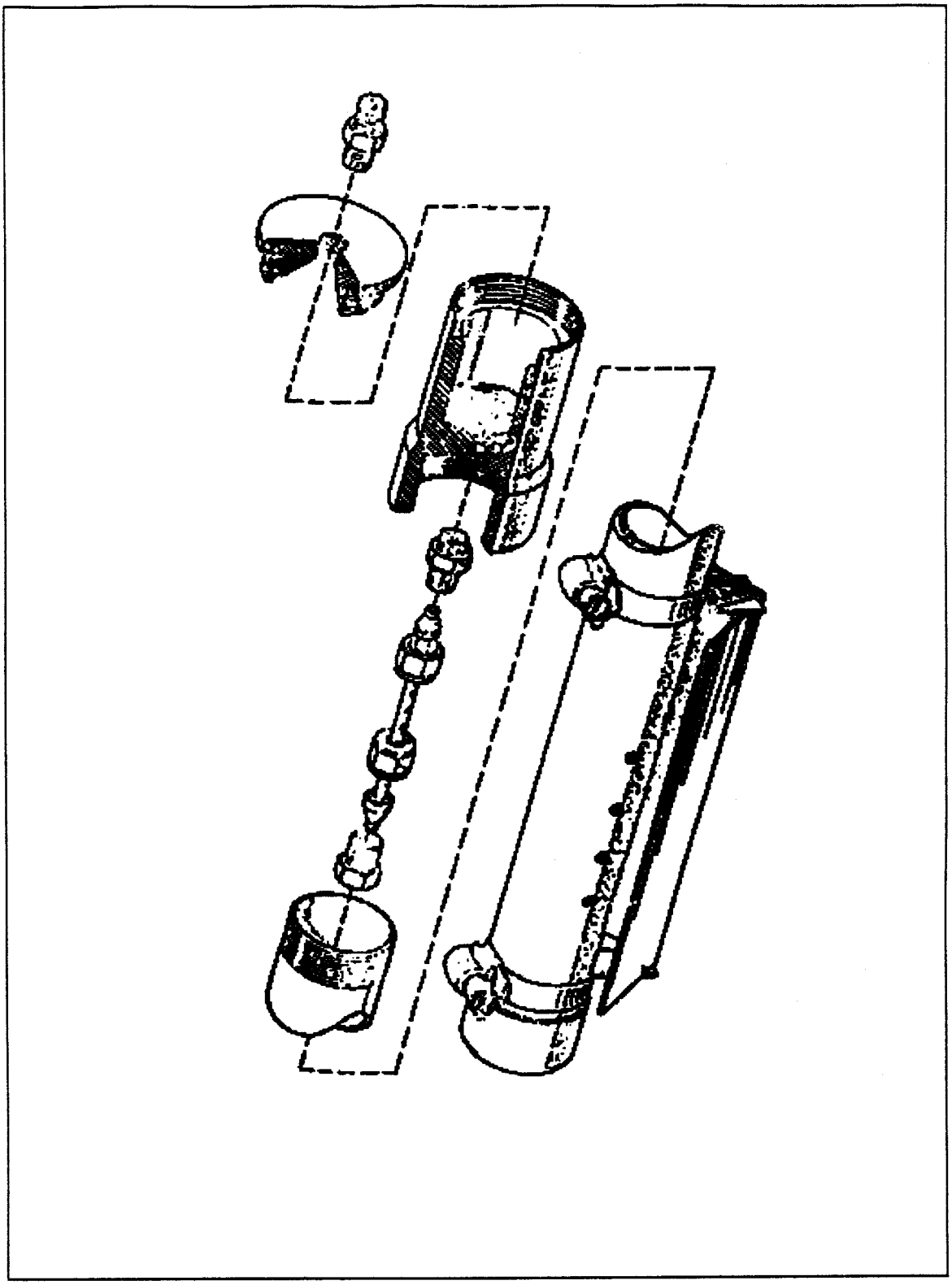

Figure 16-1. Probe used for Sample Gas Containing High Particulate Matter Loading.

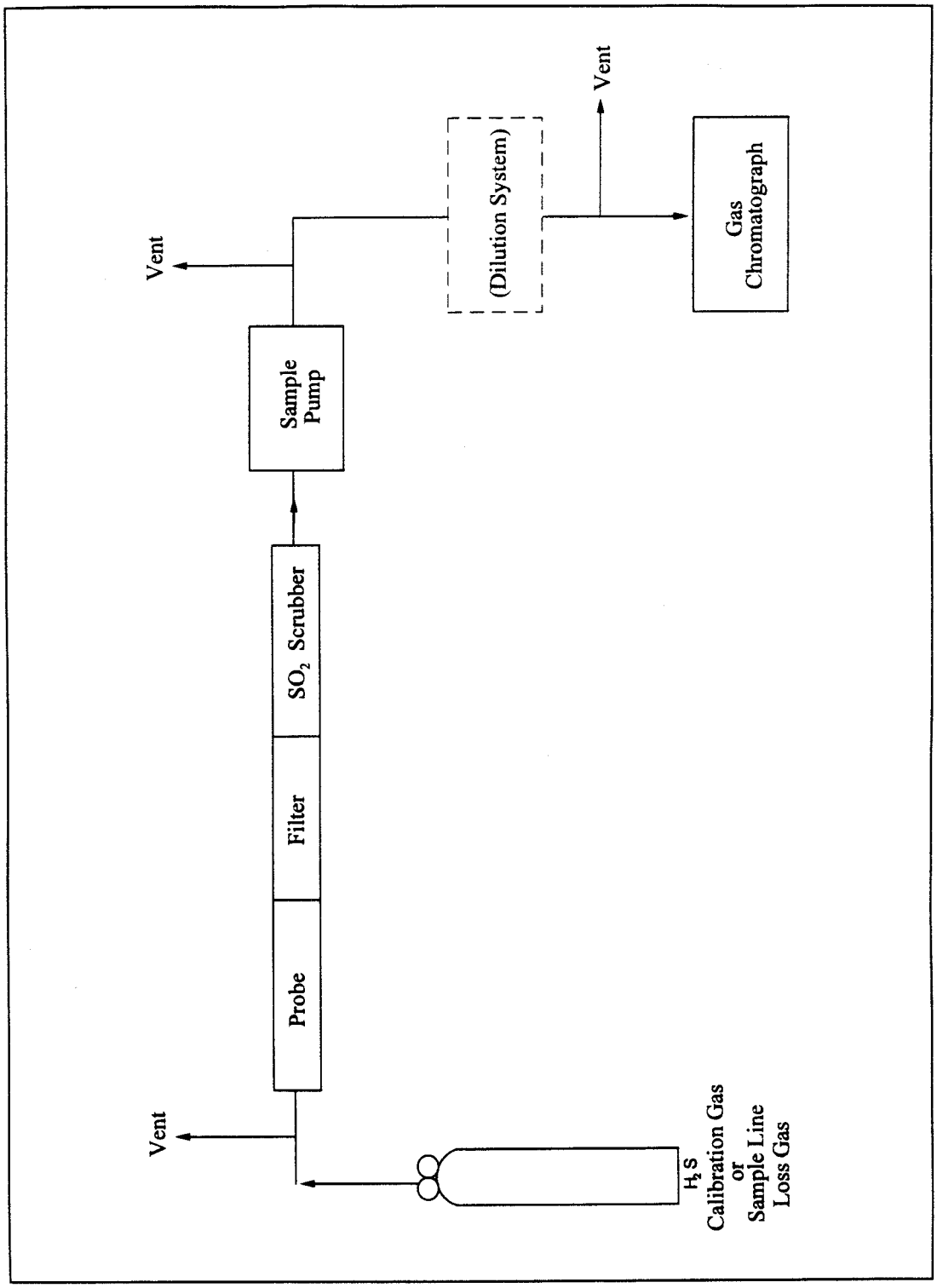

Figure 16-2. Calibration System.

BILLING CODE 6560–50–C

Method 16A—Determination of Total Reduced Sulfur Emissions From Stationary Sources (Impinger Technique)

Note: This method does not include all of the specifications (*e.g.,* equipment and supplies) and procedures (*e.g.,* sampling and analytical) essential to its performance. Some material is incorporated by reference from other methods in this part. Therefore, to obtain reliable results, persons using this method should have a thorough knowledge of at least the following additional test methods: Method 1, Method 6, and Method 16.

1.0 Scope and Application

1.1 Analytes.

Analyte	CAS No.	Sensitivity
Total reduced sulfur (TRS) including:	N/A	See Section 13.1.
Dimethyl disulfide [$(CH_3)_2S_2$]	62–49–20	
Dimethyl sulfide [$(CH_3)_2S$]	75–18–3	
Hydrogen sulfide [H_2S]	7783–06–4	
Methyl mercaptan [CH_4S]	74–93–1	
Reduced sulfur (RS) including:	N/A	
H_2S	7783–06–4	
Carbonyl sulfide [COS]	463–58–1	
Carbon disulfide [CS_2]	75–15–0	
Reported as: Sulfur dioxide (SO_2)	7449–09–5	

1.2 Applicability. This method is applicable for the determination of TRS emissions from recovery boilers, lime kilns, and smelt dissolving tanks at kraft pulp mills, reduced sulfur compounds (H_2S, carbonyl sulfide, and carbon disulfide from sulfur recovery units at onshore natural gas processing facilities, and from other sources when specified in an applicable subpart of the regulations. The flue gas must contain at least 1 percent oxygen for complete oxidation of all TRS to SO_2.

1.3 Data Quality Objectives. Adherence to the requirements of this method will enhance the quality of the data obtained from air pollutant sampling methods.

2.0 Summary of Method

2.1 An integrated gas sample is extracted from the stack. SO_2 is removed selectively from the sample using a citrate buffer solution. TRS compounds are then thermally oxidized to SO_2, collected in hydrogen peroxide as sulfate, and analyzed by the Method 6 barium-thorin titration procedure.

3.0 Definitions. [Reserved]

4.0 Interferences

4.1 Reduced sulfur compounds other than those regulated by the emission standards, if present, may be measured by this method. Therefore, carbonyl sulfide, which is partially oxidized to SO_2 and may be present in a lime kiln exit stack, would be a positive interferant.

4.2 Particulate matter from the lime kiln stack gas (primarily calcium carbonate) can cause a negative bias if it is allowed to enter the citrate scrubber; the particulate matter will cause the pH to rise and H_2S to be absorbed prior to oxidation. Furthermore, if the calcium carbonate enters the hydrogen peroxide impingers, the calcium will precipitate sulfate ion. Proper use of the particulate filter described in Section 6.1.3 will eliminate this interference.

5.0 Safety

5.1 Disclaimer. This method may involve hazardous materials, operations, and equipment. This test method may not address all of the safety problems associated with its use. It is the responsibility of the user of this test method to establish appropriate safety and health practices and determine the applicability of regulatory limitations prior to performing this test method.

5.2 Corrosive reagents. The following reagents are hazardous. Personal protective equipment and safe procedures are useful in preventing chemical splashes. If contact occurs, immediately flush with copious amounts of water for at least 15 minutes. Remove clothing under shower and decontaminate. Treat residual chemical burns as thermal burns.

5.2.1 Hydrogen Peroxide (H_2O_2). Irritating to eyes, skin, nose, and lungs.

5.2.2 Sodium Hydroxide (NaOH). Causes severe damage to eyes and skin. Inhalation causes irritation to nose, throat, and lungs. Reacts exothermically with limited amounts of water.

5.2.3 Sulfuric Acid (H_2SO_4). Rapidly destructive to body tissue. Will cause third degree burns. Eye damage may result in blindness. Inhalation may be fatal from spasm of the larynx, usually within 30 minutes. May cause lung tissue damage with edema. 3 mg/m^3 will cause lung damage in uninitiated. 1 mg/m^3 for 8 hours will cause lung damage or, in higher concentrations, death. Provide ventilation to limit inhalation. Reacts violently with metals and organics.

5.3 Hydrogen Sulfide (H_2S). A flammable, poisonous gas with the odor of rotten eggs. H_2S is extremely hazardous and can cause collapse, coma, and death within a few seconds of one or two inhalations at sufficient concentrations. Low concentrations irritate the mucous membranes and may cause nausea, dizziness, and headache after exposure.

6.0 Equipment and Supplies

6.1 Sample Collection. The sampling train is shown in Figure 16A–1 and component parts are discussed below. Modifications to this sampling train are acceptable provided the system performance check is met (see Section 8.5).

6.1.1 Probe. Teflon tubing, 6.4-mm (¼-in.) diameter, sequentially wrapped with heat-resistant fiber strips, a rubberized heat tape (plug at one end), and heat-resistant adhesive tape. A flexible thermocouple or other suitable temperature measuring device should be placed between the Teflon tubing and the fiber strips so that the temperature can be monitored to prevent softening of the probe. The probe should be sheathed in stainless steel to provide in-stack rigidity. A series of bored-out stainless steel fittings placed at the front of the sheath will prevent moisture and particulate from entering between the probe and sheath. A 6.4-mm (¼-in.) Teflon elbow (bored out) should be attached to the inlet of the probe, and a 2.54 cm (1 in.) piece of Teflon tubing should be attached at the open end of the elbow to permit the opening of the probe to be turned away from the particulate stream; this will reduce the amount of particulate drawn into the sampling train. The probe is depicted in Figure 16A–2.

6.1.2 Probe Brush. Nylon bristle brush with handle inserted into a 3.2-mm (⅛-in.) Teflon tubing. The Teflon tubing should be long enough to pass

the brush through the length of the probe.

6.1.3 Particulate Filter. 50-mm Teflon filter holder and a 1- to 2-µm porosity, Teflon filter (available through Savillex Corporation, 5325 Highway 101, Minnetonka, Minnesota 55343). The filter holder must be maintained in a hot box at a temperature sufficient to prevent moisture condensation. A temperature of 121 °C (250 °F) was found to be sufficient when testing a lime kiln under sub-freezing ambient conditions.

6.1.4 SO_2 Scrubber. Three 300-ml Teflon segmented impingers connected in series with flexible, thick-walled, Teflon tubing. (Impinger parts and tubing available through Savillex.) The first two impingers contain 100 ml of citrate buffer and the third impinger is initially dry. The tip of the tube inserted into the solution should be constricted to less than 3 mm (⅛-in.) ID and should be immersed to a depth of at least 5 cm (2 in.).

6.1.5 Combustion Tube. Quartz glass tubing with an expanded combustion chamber 2.54 cm (1 in.) in diameter and at least 30.5 cm (12 in.) long. The tube ends should have an outside diameter of 0.6 cm (¼ in.) and be at least 15.3 cm (6 in.) long. This length is necessary to maintain the quartz-glass connector near ambient temperature and thereby avoid leaks. Alternatively, the outlet may be constructed with a 90-degree glass elbow and socket that would fit directly onto the inlet of the first peroxide impinger.

6.1.6 Furnace. A furnace of sufficient size to enclose the combustion chamber of the combustion tube with a temperature regulator capable of maintaining the temperature at 800 ± 100 °C (1472 ± 180 °F). The furnace operating temperature should be checked with a thermocouple to ensure accuracy.

6.1.7 Peroxide Impingers, Stopcock Grease, Temperature Sensor, Drying Tube, Valve, Pump, and Barometer. Same as Method 6, Sections 6.1.1.2, 6.1.1.4, 6.1.1.5, 6.1.1.6, 6.1.1.7, 6.1.1.8, and 6.1.2, respectively, except that the midget bubbler of Method 6, Section 6.1.1.2 is not required.

6.1.8 Vacuum Gauge. At least 760 mm Hg (30 in. Hg) gauge.

6.1.9 Rate Meter. Rotameter, or equivalent, accurate to within 5 percent at the selected flow rate of approximately 2 liters/min (4.2 ft^3/hr).

6.1.10 Volume Meter. Dry gas meter capable of measuring the sample volume under the sampling conditions of 2 liters/min (4.2 ft^3/hr) with an accuracy of 2 percent.

6.2 Sample Recovery. Polyethylene Bottles, 250-ml (one per sample).

6.3 Sample Preparation and Analysis. Same as Method 6, Section 6.3, except a 10-ml buret with 0.05-ml graduations is required, and the spectrophotometer is not needed.

7.0 Reagents and Standards

Note: Unless otherwise indicated, all reagents must conform to the specifications established by the Committee on Analytical Reagents of the American Chemical Society. When such specifications are not available, the best available grade must be used.

7.1 Sample Collection. The following reagents are required for sample analysis:

7.1.1 Water. Same as in Method 6, Section 7.1.1.

7.1.2 Citrate Buffer. Dissolve 300 g of potassium citrate (or 284 g of sodium citrate) and 41 g of anhydrous citric acid in 1 liter of water (200 ml is needed per test). Adjust the pH to between 5.4 and 5.6 with potassium citrate or citric acid, as required.

7.1.3 Hydrogen Peroxide, 3 percent. Same as in Method 6, Section 7.1.3 (40 ml is needed per sample).

7.1.4 Recovery Check Gas. Hydrogen sulfide (100 ppmv or less) in nitrogen, stored in aluminum cylinders. Verify the concentration by Method 11 or by gas chromatography where the instrument is calibrated with an H_2S permeation tube as described below. For Method 11, the relative standard deviation should not exceed 5 percent on at least three 20-minute runs.

Note: Alternatively, hydrogen sulfide recovery gas generated from a permeation device gravimetrically calibrated and certified at some convenient operating temperature may be used. The permeation rate of the device must be such that at a dilution gas flow rate of 3 liters/min (6.4 ft^3/hr), an H_2S concentration in the range of the stack gas or within 20 percent of the standard can be generated.

7.1.5 Combustion Gas. Gas containing less than 50 ppb reduced sulfur compounds and less than 10 ppmv total hydrocarbons. The gas may be generated from a clean-air system that purifies ambient air and consists of the following components: Diaphragm pump, silica gel drying tube, activated charcoal tube, and flow rate measuring device. Flow from a compressed air cylinder is also acceptable.

7.2 Sample Recovery and Analysis. Same as Method 6, Sections 7.2.1 and 7.3, respectively.

8.0 Sample Collection, Preservation, Storage, and Transport

8.1 Preparation of Sampling Train.

8.1.1 For the SO_2 scrubber, measure 100 ml of citrate buffer into the first and second impingers; leave the third impinger empty. Immerse the impingers in an ice bath, and locate them as close as possible to the filter heat box. The connecting tubing should be free of loops. Maintain the probe and filter temperatures sufficiently high to prevent moisture condensation, and monitor with a suitable temperature sensor.

8.1.2 For the Method 6 part of the train, measure 20 ml of 3 percent hydrogen peroxide into the first and second midget impingers. Leave the third midget impinger empty, and place silica gel in the fourth midget impinger. Alternatively, a silica gel drying tube may be used in place of the fourth impinger. Maintain the oxidation furnace at 800 ± 100 °C (1472 ± 180 °F). Place crushed ice and water around all impingers.

8.2 Citrate Scrubber Conditioning Procedure. Condition the citrate buffer scrubbing solution by pulling stack gas through the Teflon impingers and bypassing all other sampling train components. A purge rate of 2 liters/min for 10 minutes has been found to be sufficient to obtain equilibrium. After the citrate scrubber has been conditioned, assemble the sampling train, and conduct (optional) a leak-check as described in Method 6, Section 8.2.

8.3 Sample Collection. Same as in Method 6, Section 8.3, except the sampling rate is 2 liters/min (±10 percent) for 1 or 3 hours. After the sample is collected, remove the probe from the stack, and conduct (mandatory) a post-test leak-check as described in Method 6, Section 8.2. The 15-minute purge of the train following collection should not be performed. After each 3-hour test run (or after three 1-hour samples), conduct one system performance check (see Section 8.5) to determine the reduced sulfur recovery efficiency through the sampling train. After this system performance check and before the next test run, rinse and brush the probe with water, replace the filter, and change the citrate scrubber (optional but recommended).

Note: In Method 16, a test run is composed of 16 individual analyses (injects) performed over a period of not less than 3 hours or more than 6 hours. For Method 16A to be consistent with Method 16, the following may be used to obtain a test run: (1) collect three 60-minute samples or (2) collect one 3-hour sample. (Three test runs constitute a test.)

8.4 Sample Recovery. Disconnect the impingers. Quantitatively transfer the contents of the midget impingers of the Method 6 part of the train into a leak-free polyethylene bottle for

shipment. Rinse the three midget impingers and the connecting tubes with water and add the washings to the same storage container. Mark the fluid level. Seal and identify the sample container.

8.5 System Performance Check.

8.5.1 A system performance check is done (1) to validate the sampling train components and procedure (prior to testing; optional) and (2) to validate a test run (after a run). Perform a check in the field prior to testing consisting of at least two samples (optional), and perform an additional check after each 3 hour run or after three 1-hour samples (mandatory).

8.5.2 The checks involve sampling a known concentration of H_2S and comparing the analyzed concentration with the known concentration. Mix the H_2S recovery check gas (Section 7.1.4) and combustion gas in a dilution system such as that shown in Figure 16A–3. Adjust the flow rates to generate an H_2S concentration in the range of the stack gas or within 20 percent of the applicable standard and an oxygen concentration greater than 1 percent at a total flow rate of at least 2.5 liters/min (5.3 ft^3/hr). Use Equation 16A–3 to calculate the concentration of recovery gas generated. Calibrate the flow rate from both sources with a soap bubble flow meter so that the diluted concentration of H_2S can be accurately calculated.

8.5.3 Collect 30-minute samples, and analyze in the same manner as the emission samples. Collect the sample through the probe of the sampling train using a manifold or some other suitable device that will ensure extraction of a representative sample.

8.5.4 The recovery check must be performed in the field prior to replacing the SO_2 scrubber and particulate filter and before the probe is cleaned. Use Equation 16A–4 (see Section 12.5) to calculate the recovery efficiency. Report the recovery efficiency with the emission data; do not correct the emission data for the recovery efficiency. A sample recovery of 100 ± 20 percent must be obtained for the emission data to be valid. However, if the recovery efficiency is not in the 100 ± 20 percent range but the results do not affect the compliance or noncompliance status of the affected facility, the Administrator may decide to accept the results of the compliance test.

9.0 Quality Control

Section	Quality control measure	Effect
8.5	System performance check	Ensure validity of sampling train components and analytical procedure.
8.2, 10.0	Sampling equipment leak-check and calibration	Ensure accurate measurement of stack gas flow rate, sample volume.
10.0	Barium standard solution standardization	Ensure precision of normality determination.
11.1	Replicate titrations	Ensure precision of titration determinations.
11.2	Audit sample analysis	Evaluate analyst's technique and standards preparation.

10.0 Calibration

Same as Method 6, Section 10.0.

11.0 Analytical Procedure

11.1 Sample Loss Check and Sample Analysis. Same as Method 6, Sections 11.1 and 11.2, respectively, with the following exception: for 1-hour sampling, take a 40-ml aliquot, add 160 ml of 100 percent isopropanol and four drops of thorin.

11.2 Audit Sample Analysis. Same as Method 6, Section 11.3.

12.0 Data Analysis and Calculations

In the calculations, at least one extra decimal figure should be retained beyond that of the acquired data. Figures should be rounded off after final calculations.

12.1 Nomenclature.

C_{TRS} = Concentration of TRS as SO_2, dry basis corrected to standard conditions, ppmv.

$C_{RG(act)}$ = Actual concentration of recovery check gas (after dilution), ppm.

$C_{RG(m)}$ = Measured concentration of recovery check gas generated, ppm.

C_{H2S} = Verified concentration of H_2S recovery gas.

N = Normality of barium perchlorate titrant, milliequivalents/ml.

P_{bar} = Barometric pressure at exit orifice of the dry gas meter, mm Hg (in. Hg).

P_{std} = Standard absolute pressure, 760 mm Hg (29.92 in. Hg).

Q_{H2S} = Calibrated flow rate of H_2S recovery gas, liters/min.

Q_{CG} = Calibrated flow rate of combustion gas, liters/min.

R = Recovery efficiency for the system performance check, percent.

T_m = Average dry gas meter absolute temperature, °K (°R).

T_{std} = Standard absolute temperature, 293 °K (528 °R).

V_a = Volume of sample aliquot titrated, ml.

V_m = Dry gas volume as measured by the dry gas meter, liters (dcf).

$V_{m(std)}$ = Dry gas volume measured by the dry gas meter, corrected to standard conditions, liters (dscf).

V_{soln} = Total volume of solution in which the sulfur dioxide sample is contained, 100 ml.

V_t = Volume of barium perchlorate titrant used for the sample, ml (average of replicate titrations).

V_{tb} = Volume of barium perchlorate titrant used for the blank, ml.

Y = Dry gas meter calibration factor.

32.03 = Equivalent weight of sulfur dioxide, mg/meq.

12.2 Dry Sample Gas Volume, Corrected to Standard Conditions.

$$V_{m(std)} = V_m Y \frac{T_{std} P_{bar}}{T_m P_{std}} = K_1 Y \frac{V_m P_{bar}}{T_m} \qquad \text{Eq. 16A-1}$$

Where:

K_1 = 0.3855 °K/mm Hg for metric units,

= 17.65 °R/in. Hg for English units.

12.3 Concentration of TRS as ppm SO_2.

$$C_{TRS} = K_2 N \frac{(V_t - V_{tb})(V_{soln}/V_a)}{V_{m(std)}} \qquad \text{Eq. 16A-2}$$

Where:

$$K_2 = 32.03 \frac{mg}{meq} \frac{24.05L}{mole} \frac{1mole}{64.06g} \frac{1g}{10^3 mg} \frac{10^3 mL}{L} \frac{10^3 \mu L}{lmL}$$
$$= \frac{12025 \mu L}{meq}$$

12.4 Concentration of Recovery Gas Generated in the System Performance Check.

$$C_{RG} = \frac{Q_{H_2S} C_{H_2S}}{Q_{H_2S} + Q_{CG}} \qquad \text{Eq. 16A-3}$$

12.5 Recovery Efficiency for the System Performance Check.

$$R = \frac{C_{RG(m)}}{C_{RG(act)}} \times 100 \qquad \text{Eq. 16A-4}$$

13.0 Method Performance

13.1 Analytical Range. The lower detectable limit is 0.1 ppmv SO_2 when sampling at 2 liters/min (4.2 ft^3/hr) for 3 hours or 0.3 ppmv when sampling at 2 liters/min (4.2 ft^3/hr) for 1 hour. The upper concentration limit of the method exceeds the TRS levels generally encountered at kraft pulp mills.

13.2 Precision. Relative standard deviations of 2.0 and 2.6 percent were obtained when sampling a recovery boiler for 1 and 3 hours, respectively.

13.3 Bias.

13.3.1 No bias was found in Method 16A relative to Method 16 in a separate study at a recovery boiler.

13.3.2 Comparison of Method 16A with Method 16 at a lime kiln indicated that there was no bias in Method 16A. However, instability of the source emissions adversely affected the comparison. The precision of Method 16A at the lime kiln was similar to that obtained at the recovery boiler (Section 13.2.1).

13.3.3 Relative standard deviations of 2.7 and 7.7 percent have been obtained for system performance checks.

14.0 Pollution Prevention. [Reserved]

15.0 Waste Management. [Reserved]

16.0 Alternative Procedures

As an alternative to the procedures specified in Section 7.1.4, the following procedure may be used to verify the H_2S concentration of the recovery check gas.

16.1 Summary. The H_2S is collected from the calibration gas cylinder and is absorbed in zinc acetate solution to form zinc sulfide. The latter compound is then measured iodometrically.

16.2 Range. The procedure has been examined in the range of 5 to 1500 ppmv.

16.3 Interferences. There are no known interferences to this procedure when used to analyze cylinder gases containing H_2S in nitrogen.

16.4 Precision and Bias. Laboratory tests have shown a relative standard deviation of less than 3 percent. The procedure showed no bias when compared to a gas chromatographic method that used gravimetrically certified permeation tubes for calibration.

16.5 Equipment and Supplies.

16.5.1 Sampling Apparatus. The sampling train is shown in Figure 16A–4. Its component parts are discussed in Sections 16.5.1.1 through 16.5.2.

16.5.1.1 Sampling Line. Teflon tubing (¼-in.) to connect the cylinder regulator to the sampling valve.

16.5.1.2 Needle Valve. Stainless steel or Teflon needle valve to control the flow rate of gases to the impingers.

16.5.1.3 Impingers. Three impingers of approximately 100-ml capacity, constructed to permit the addition of reagents through the gas inlet stem. The impingers shall be connected in series with leak-free glass or Teflon connectors. The impinger bottoms have a standard 24/25 ground-glass fitting. The stems are from standard 6.4-mm (¼-in.) ball joint midget impingers, custom lengthened by about 1 in. When fitted together, the stem end should be approximately 1.27 cm (½ in.) from the bottom (Southern Scientific, Inc., Micanopy, Florida: Set Number S6962–048). The third in-line impinger acts as a drop-out bottle.

16.5.1.4 Drying Tube, Rate Meter, and Barometer. Same as Method 11, Sections 6.1.5, 6.1.8, and 6.1.10, respectively.

16.5.1.5 Cylinder Gas Regulator. Stainless steel, to reduce the pressure of the gas stream entering the Teflon sampling line to a safe level.

16.5.1.6 Soap Bubble Meter. Calibrated for 100 and 500 ml, or two separate bubble meters.

16.5.1.7 Critical Orifice. For volume and rate measurements. The critical orifice may be fabricated according to Section 16.7.3 and must be calibrated as specified in Section 16.12.4.

16.5.1.8 Graduated Cylinder. 50-ml size.

16.5.1.9 Volumetric Flask. 1-liter size.

16.5.1.10 Volumetric Pipette. 15-ml size.

16.5.1.11 Vacuum Gauge. Minimum 20 in. Hg capacity.

16.5.1.12 Stopwatch.

16.5.2 Sample Recovery and Analysis.

16.5.2.1 Erlenmeyer Flasks. 125- and 250-ml sizes.

16.5.2.2 Pipettes. 2-, 10-, 20-, and 100-ml volumetric.

16.5.2.3 Burette. 50-ml size.

16.5.2.4 Volumetric Flask. 1-liter size.

16.5.2.5 Graduated Cylinder. 50-ml size.

16.5.2.6 Wash Bottle.

16.5.2.7 Stirring Plate and Bars.

16.6 Reagents and Standards. Unless otherwise indicated, all reagents must conform to the specifications established by the Committee on Analytical Reagents of the American Chemical Society, where such specifications are available. Otherwise, use the best available grade.

16.6.1 Water. Same as Method 11, Section 7.1.3.

16.6.2 Zinc Acetate Absorbing Solution. Dissolve 20 g zinc acetate in water, and dilute to 1 liter.

16.6.3 Potassium Bi-iodate [$KH(IO_3)_2$] Solution, Standard 0.100 N. Dissolve 3.249 g anhydrous $KH(IO_3)_2$ in water, and dilute to 1 liter.

16.6.4 Sodium Thiosulfate ($Na_2S_2O_3$) Solution, Standard 0.1 N. Same as Method 11, Section 7.3.2. Standardize according to Section 16.12.2.

16.6.5 $Na_2S_2O_3$ Solution, Standard 0.01 N. Pipette 100.0 ml of 0.1 N $Na_2S_2O_3$ solution into a 1-liter volumetric flask, and dilute to the mark with water.

16.6.6 Iodine Solution, 0.1 N. Same as Method 11, Section 7.2.3.

16.6.7 Standard Iodine Solution, 0.01 N. Same as in Method 11, Section 7.2.4. Standardize according to Section 16.12.3.

16.6.8 Hydrochloric Acid (HCl) Solution, 10 Percent by Weight. Add 230 ml concentrated HCl (specific gravity 1.19) to 770 ml water.

16.6.9 Starch Indicator Solution. To 5 g starch (potato, arrowroot, or soluble), add a little cold water, and grind in a mortar to a thin paste. Pour into 1 liter of boiling water, stir, and let settle overnight. Use the clear supernatant. Preserve with 1.25 g salicylic acid, 4 g zinc chloride, or a combination of 4 g sodium propionate and 2 g sodium

azide per liter of starch solution. Some commercial starch substitutes are satisfactory.

16.7 Pre-test Procedures.

16.7.1 Selection of Gas Sample Volumes. This procedure has been validated for estimating the volume of cylinder gas sample needed when the H_2S concentration is in the range of 5 to 1500 ppmv. The sample volume ranges were selected in order to ensure a 35 to 60 percent consumption of the 20 ml of 0.01 N iodine (thus ensuring a 0.01 N $Na_2S_2O_3$ titer of approximately 7 to 12 ml). The sample volumes for various H_2S concentrations can be estimated by dividing the approximate ppm-liters desired for a given concentration range by the H_2S concentration stated by the manufacturer. For example, for analyzing a cylinder gas containing approximately 10 ppmv H_2S, the optimum sample volume is 65 liters (650 ppm-liters/10 ppmv). For analyzing a cylinder gas containing approximately 1000 ppmv H_2S, the optimum sample volume is 1 liter (1000 ppm-liters/1000 ppmv).

Approximate cylinder gas H_2S concentration (ppmv)	Approximate ppm-liters desired
5 to <30	650
30 to <500	800
500 to <1500	1000

16.7.2 Critical Orifice Flow Rate Selection. The following table shows the ranges of sample flow rates that are desirable in order to ensure capture of H_2S in the impinger solution. Slight deviations from these ranges will not have an impact on measured concentrations.

Cylinder gas H_2S concentration (ppmv)	Critical orifice flow rate (ml/min)
5 to 50 ppmv	1500 ± 500
50 to 250 ppmv	500 ± 250
250 to <1000 ppmv	200 ± 50
>1000 ppmv	75 ± 25

16.7.3 Critical Orifice Fabrication. Critical orifice of desired flow rates may be fabricated by selecting an orifice tube of desired length and connecting 1/16-in. x 1/4-in. (0.16 cm x 0.64 cm) reducing fittings to both ends. The inside diameters and lengths of orifice tubes needed to obtain specific flow rates are shown below.

Tube (in. OD)	Tube (in. ID)	Length (in.)	Flowrate (ml/min)	Altech Catalog No.
1/16	0.007	1.2	85	301430
1/16	0.01	3.2	215	300530
1/16	0.01	1.2	350	300530
1/16	0.02	1.2	1400	300230

16.7.4 Determination of Critical Orifice Approximate Flow Rate. Connect the critical orifice to the sampling system as shown in Figure 16A–4 but without the H_2S cylinder. Connect a rotameter in the line to the first impinger. Turn on the pump, and adjust the valve to give a reading of about half atmospheric pressure. Observe the rotameter reading. Slowly increase the vacuum until a stable flow rate is reached, and record this as the critical vacuum. The measured flow rate indicates the expected critical flow rate of the orifice. If this flow rate is in the range shown in Section 16.7.2, proceed with the critical orifice calibration according to Section 16.12.4.

16.7.5 Determination of Approximate Sampling Time. Determine the approximate sampling time for a cylinder of known concentration. Use the optimum sample volume obtained in Section 16.7.1.

$$\text{Approximate sampling time} = \frac{\text{Optimum volume}}{\text{Critical orifice flow rate}}$$

16.8 Sample Collection.

16.8.1 Connect the Teflon tubing, Teflon tee, and rotameter to the flow control needle valve as shown in Figure 16A–4. Vent the rotameter to an exhaust hood. Plug the open end of the tee. Five to 10 minutes prior to sampling, open the cylinder valve while keeping the flow control needle valve closed. Adjust the delivery pressure to 20 psi. Open the needle valve slowly until the rotameter shows a flow rate approximately 50 to 100 ml above the flow rate of the critical orifice being used in the system.

16.8.2 Place 50 ml of zinc acetate solution in two of the impingers, connect them and the empty third impinger (dropout bottle) and the rest of the equipment as shown in Figure 16A–4. Make sure the ground-glass fittings are tight. The impingers can be easily stabilized by using a small cardboard box in which three holes have been cut, to act as a holder. Connect the Teflon sample line to the first impinger. Cover the impingers with a dark cloth or piece of plastic to protect the absorbing solution from light during sampling.

16.8.3 Record the temperature and barometric pressure. Note the gas flow rate through the rotameter. Open the closed end of the tee. Connect the sampling tube to the tee, ensuring a tight connection. Start the sampling pump and stopwatch simultaneously. Note the decrease in flow rate through the excess flow rotameter. This decrease should equal the known flow rate of the critical orifice being used. Continue sampling for the period determined in Section 16.7.5.

16.8.4 When sampling is complete, turn off the pump and stopwatch. Disconnect the sampling line from the tee and plug it. Close the needle valve followed by the cylinder valve. Record the sampling time.

16.9 Blank Analysis. While the sample is being collected, run a blank as follows: To a 250-ml Erlenmeyer flask, add 100 ml of zinc acetate solution, 20.0 ml of 0.01 N iodine solution, and 2 ml HCl solution. Titrate, while stirring, with 0.01 N $Na_2S_2O_3$ until the solution is light yellow. Add starch, and continue titrating until the blue color disappears. Analyze a blank with each sample, as the blank titer has been observed to change over the course of a day.

Note: Iodine titration of zinc acetate solutions is difficult to perform because the solution turns slightly white in color near the end point, and the disappearance of the blue color is hard to recognize. In addition, a blue color may reappear in the solution about 30 to 45 seconds after the titration endpoint is reached. This should not be taken to mean

the original endpoint was in error. It is recommended that persons conducting this test perform several titrations to be able to correctly identify the endpoint. The importance of this should be recognized because the results of this analytical procedure are extremely sensitive to errors in titration.

16.10 Sample Analysis. Sample treatment is similar to the blank treatment. Before detaching the stems from the bottoms of the impingers, add 20.0 ml of 0.01 N iodine solution through the stems of the impingers holding the zinc acetate solution, dividing it between the two (add about 15 ml to the first impinger and the rest to the second). Add 2 ml HCl solution through the stems, dividing it as with the iodine. Disconnect the sampling line, and store the impingers for 30 minutes. At the end of 30 minutes, rinse the impinger stems into the impinger bottoms. Titrate the impinger contents with 0.01 N $Na_2S_2O_3$. Do not transfer the contents of the impinger to a flask because this may result in a loss of iodine and cause a positive bias.

16.11 Post-test Orifice Calibration. Conduct a post-test critical orifice calibration run using the calibration procedures outlined in Section 16.12.4. If the Q_{std} obtained before and after the test differs by more than 5 percent, void the sample; if not, proceed to perform the calculations.

16.12 Calibrations and Standardizations.

16.12.1 Rotameter and Barometer. Same as Method 11, Sections 10.1.3 and 10.1.4.

16.12.2 $Na_2S_2O_3$ Solution, 0.1 N. Standardize the 0.1 N $Na_2S_2O_3$ solution as follows: To 80 ml water, stirring constantly, add 1 ml concentrated H_2SO_4, 10.0 ml of 0.100 N $KH(IO_3)_2$ and 1 g potassium iodide. Titrate immediately with 0.1 N $Na_2S_2O_3$ until the solution is light yellow. Add 3 ml starch solution, and titrate until the blue color just disappears. Repeat the titration until replicate analyses agree within 0.05 ml. Take the average volume of $Na_2S_2O_3$ consumed to calculate the normality to three decimal figures using Equation 16A–5.

16.12.3 Iodine Solution, 0.01 N. Standardize the 0.01 N iodine solution as follows: Pipet 20.0 ml of 0.01 N iodine solution into a 125-ml Erlenmeyer flask. Titrate with standard 0.01 N $Na_2S_2O_3$ solution until the solution is light yellow. Add 3 ml starch solution, and continue titrating until the blue color just disappears. If the normality of the iodine tested is not 0.010, add a few ml of 0.1 N iodine solution if it is low, or a few ml of water if it is high, and standardize again. Repeat the titration until replicate values agree within 0.05 ml. Take the average volume to calculate the normality to three decimal figures using Equation 16A–6.

16.12.4 Critical Orifice. Calibrate the critical orifice using the sampling train shown in Figure 16A–4 but without the H_2S cylinder and vent rotameter. Connect the soap bubble meter to the Teflon line that is connected to the first impinger. Turn on the pump, and adjust the needle valve until the vacuum is higher than the critical vacuum determined in Section 16.7.4. Record the time required for gas flow to equal the soap bubble meter volume (use the 100-ml soap bubble meter for gas flow rates below 100 ml/min, otherwise use the 500-ml soap bubble meter). Make three runs, and record the data listed in Table 16A–1. Use these data to calculate the volumetric flow rate of the orifice.

16.13 Calculations.

16.13.1 Nomenclature.

B_{wa} = Fraction of water vapor in ambient air during orifice calibration.

C_{H_2S} = H_2S concentration in cylinder gas, ppmv.

$$K_2 = 32.03 \frac{mg}{meq} \frac{24.05L}{mole} \frac{1mole}{64.06g} \frac{1g}{10^3 mg} \frac{10^3 mL}{L} \frac{10^3 \mu L}{l mL} = \frac{12025 \mu L}{meq}$$

M_a = Molecular weight of ambient air saturated at impinger temperature, g/g-mole.

M_s = Molecular weight of sample gas (nitrogen) saturated at impinger temperature, g/g-mole.

Note: (For tests carried out in a laboratory where the impinger temperature is 25 °C, M_a = 28.5 g/g-mole and M_s = 27.7 g/g-mole.)

N_I = Normality of standard iodine solution (0.01 N), g-eq/liter.

N_T = Normality of standard $Na_2S_2O_3$ solution (0.01 N), g-eq/liter.

P_{bar} = Barometric pressure, mm Hg.

P_{std} = Standard absolute pressure, 760 mm Hg.

Q_{std} = Average volumetric flow rate through critical orifice, liters/min.

T_{amb} = Absolute ambient temperature, °K.

T_{std} = Standard absolute temperature, 293 °K.

θ_s = Sampling time, min.

θ_{sb} = Time for soap bubble meter flow rate measurement, min.

$V_{m(std)}$ = Sample gas volume measured by the critical orifice, corrected to standard conditions, liters.

V_{sb} = Volume of gas as measured by the soap bubble meter, ml.

$V_{sb(std)}$ = Volume of gas as measured by the soap bubble meter, corrected to standard conditions, liters.

V_I = Volume of standard iodine solution (0.01 N) used, ml.

V_T = Volume of standard $Na_2S_2O_3$ solution (0.01 N) used, ml.

V_{TB} = Volume of standard $Na_2S_2O_3$ solution (0.01 N) used for the blank, ml.

16.13.2 Normality of Standard $Na_2S_2O_3$ Solution (0.1 N).

$$N_T = \frac{1}{mL\ Na_2S_2O_3\ consumed} \qquad \text{Eq. 16A-5}$$

16.13.3 Normality of Standard Iodine Solution (0.01 N).

$$N_I = \frac{N_T V_T}{V_I} \qquad \text{Eq. 16A-6}$$

16.13.4 Sample Gas Volume.

$$V_{m(std)} = \overline{Q}_{std} \Theta_s \left(1 - B_{wa}\right) \frac{M_a}{M_b} \qquad \text{Eq. 16A-7}$$

16.13.5 Concentration of H_2S in the Gas Cylinder.

$$C_{H_2S} = \frac{K N_T \left(V_{TB} - V_T\right)}{V_{m(std)}} \qquad \text{Eq. 16A-8}$$

17.0 References

1. American Public Health Association, American Water Works Association, and Water Pollution Control Federation. Standard Methods for the Examination of Water and Wastewater. Washington, DC. American Public Health Association. 1975. pp. 316–317.

2. American Society for Testing and Materials. Annual Book of ASTM Standards. Part 31: Water, Atmospheric Analysis. Philadelphia, PA. 1974. pp. 40–42.

3. Blosser, R.O. A Study of TRS Measurement Methods. National Council of the Paper Industry for Air and Stream Improvement, Inc., New York, NY. Technical Bulletin No. 434. May 1984. 14 pp.

4. Blosser, R.O., H.S. Oglesby, and A.K. Jain. A Study of Alternate SO_2 Scrubber Designs Used for TRS Monitoring. A Special Report by the National Council of the Paper Industry for Air and Stream Improvement, Inc., New York, NY. July 1977.

5. Curtis, F., and G.D. McAlister. Development and Evaluation of an Oxidation/Method 6 TRS Emission Sampling Procedure. Emission Measurement Branch, Emission Standards and Engineering Division, U.S. Environmental Protection Agency, Research Triangle Park, NC 27711. February 1980.

6. Gellman, I. A Laboratory and Field Study of Reduced Sulfur Sampling and Monitoring Systems. National Council of the Paper Industry for Air and Stream Improvement, Inc., New York, NY. Atmospheric Quality Improvement Technical Bulletin No. 81. October 1975.

7. Margeson, J.H., J.E. Knoll, and M.R. Midgett. A Manual Method for TRS Determination. Source Branch, Quality Assurance Division, U.S. Environmental Protection Agency, Research Triangle Park, NC 27711.

8. National Council of the Paper Industry for Air and Stream Improvement. An Investigation of H_2S and SO_2. Calibration Cylinder Gas Stability and Their Standardization Using Wet Chemical Techniques. Special Report 76–06. New York, NY. August 1976.

9. National Council of the Paper Industry for Air and Stream Improvement. Wet Chemical Method for Determining the H_2S Concentration of Calibration Cylinder Gases. Technical Bulletin Number 450. New York, NY. January 1985. 23 pp.

10. National Council of the Paper Industry for Air and Stream Improvement. Modified Wet Chemical Method for Determining the H_2S Concentration of Calibration Cylinder Gases. Draft Report. New York, NY. March 1987. 29 pp.

BILLING CODE 6560–50–P

18.0 Tables, Diagrams, Flowcharts, and Validation Data

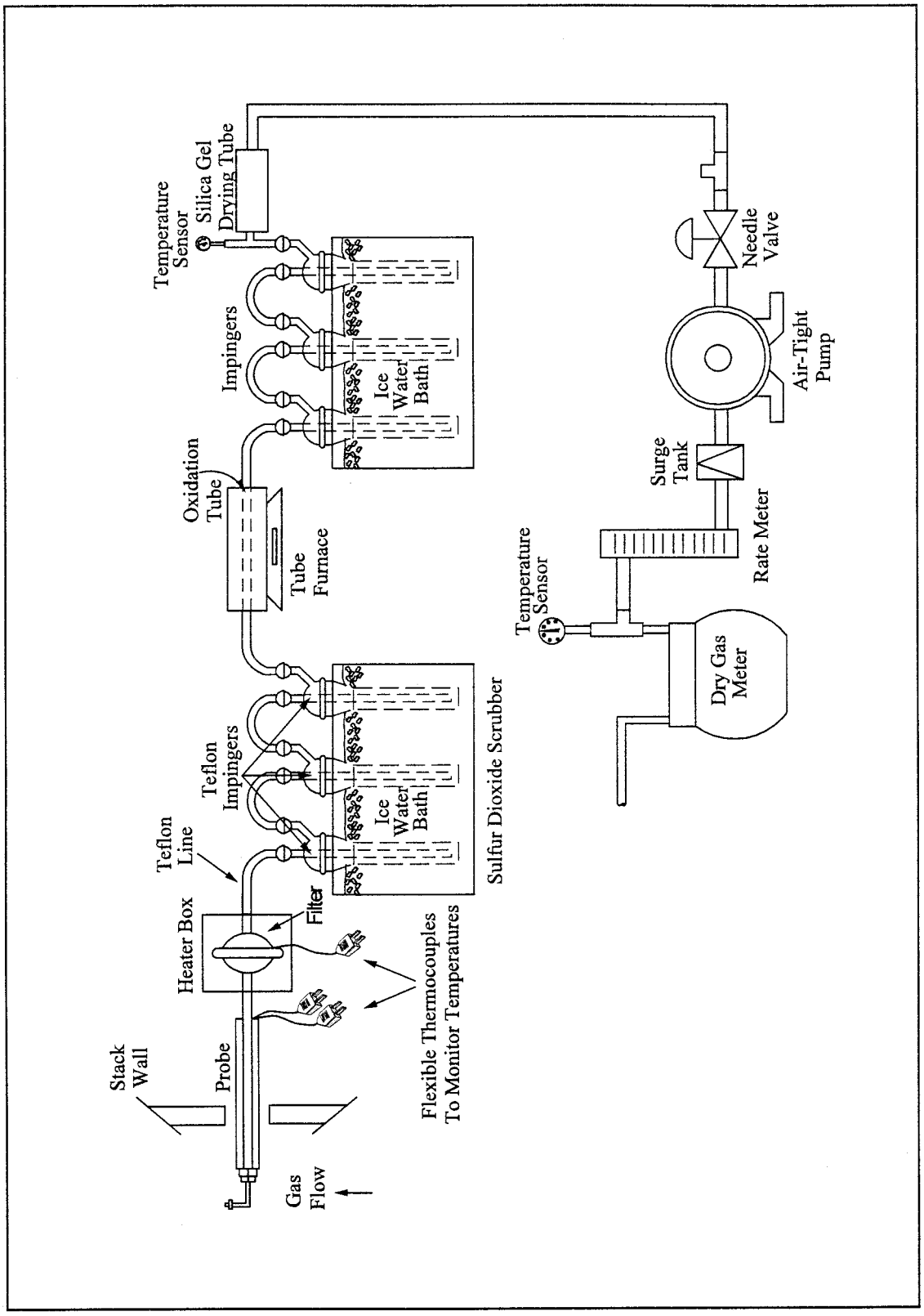

Figure 16A-1. Sampling Train.

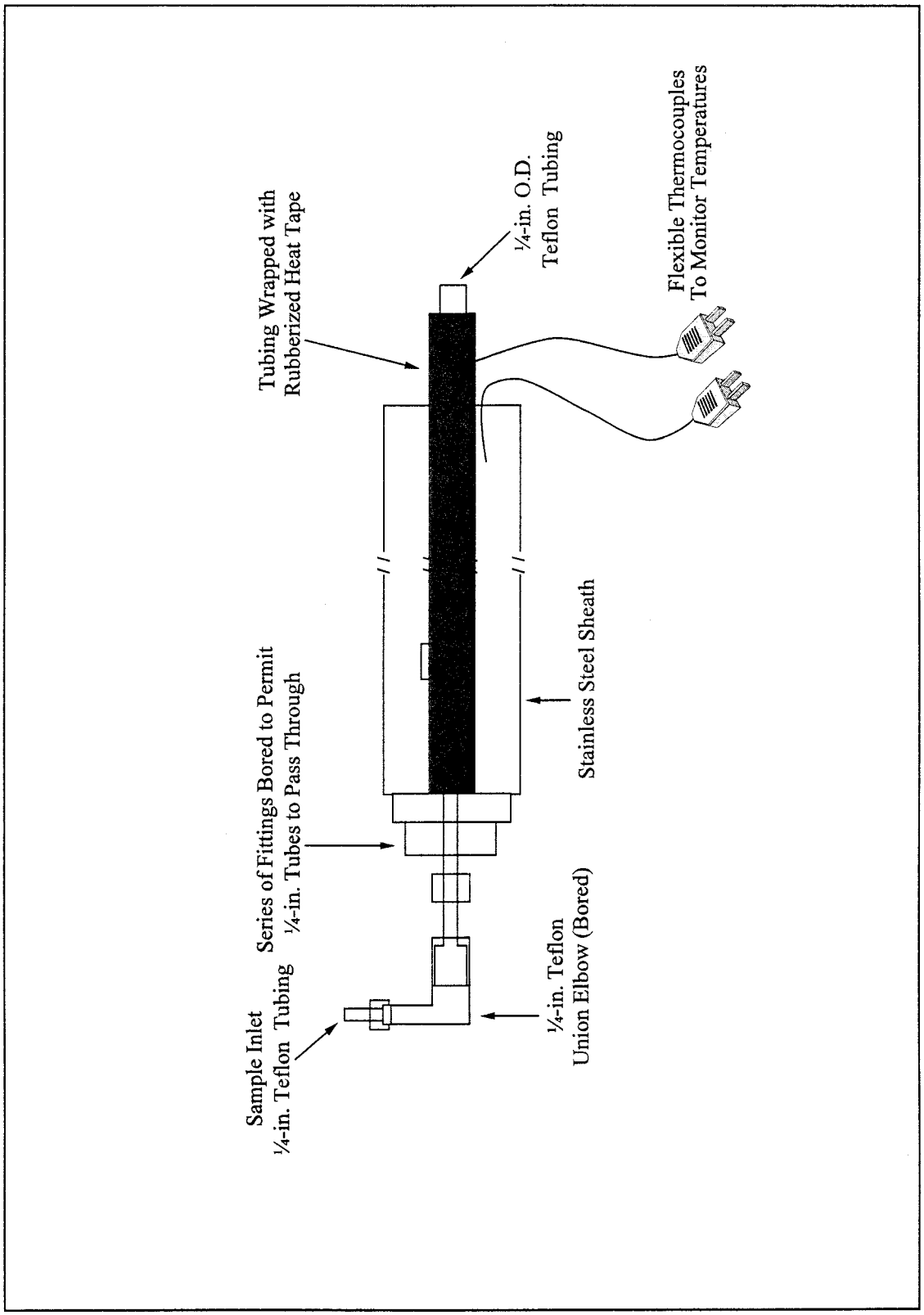

Figure 16A-2. Angled Sampling Probe.

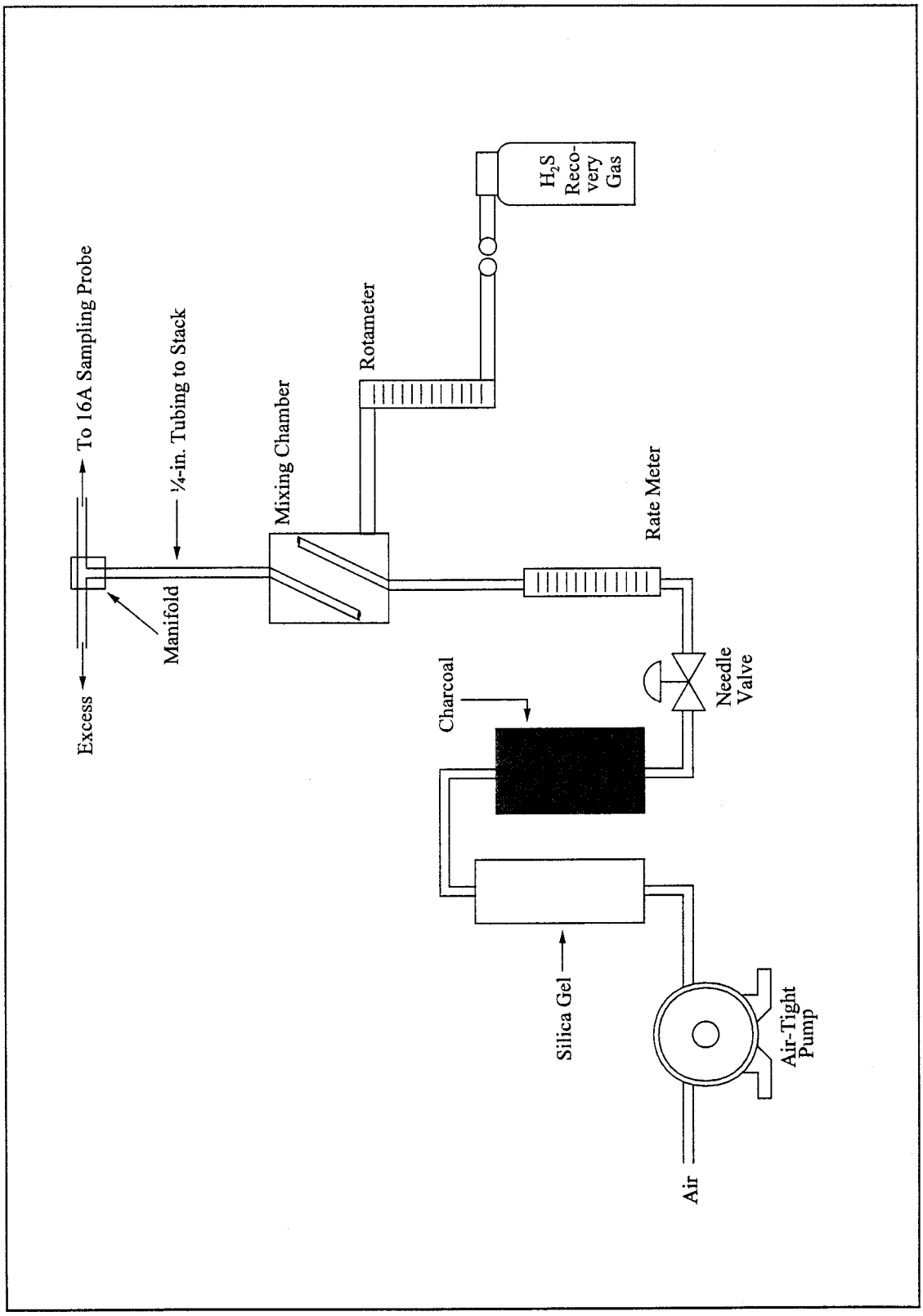

Figure 16A-3. Recovery Gas Dilution System.

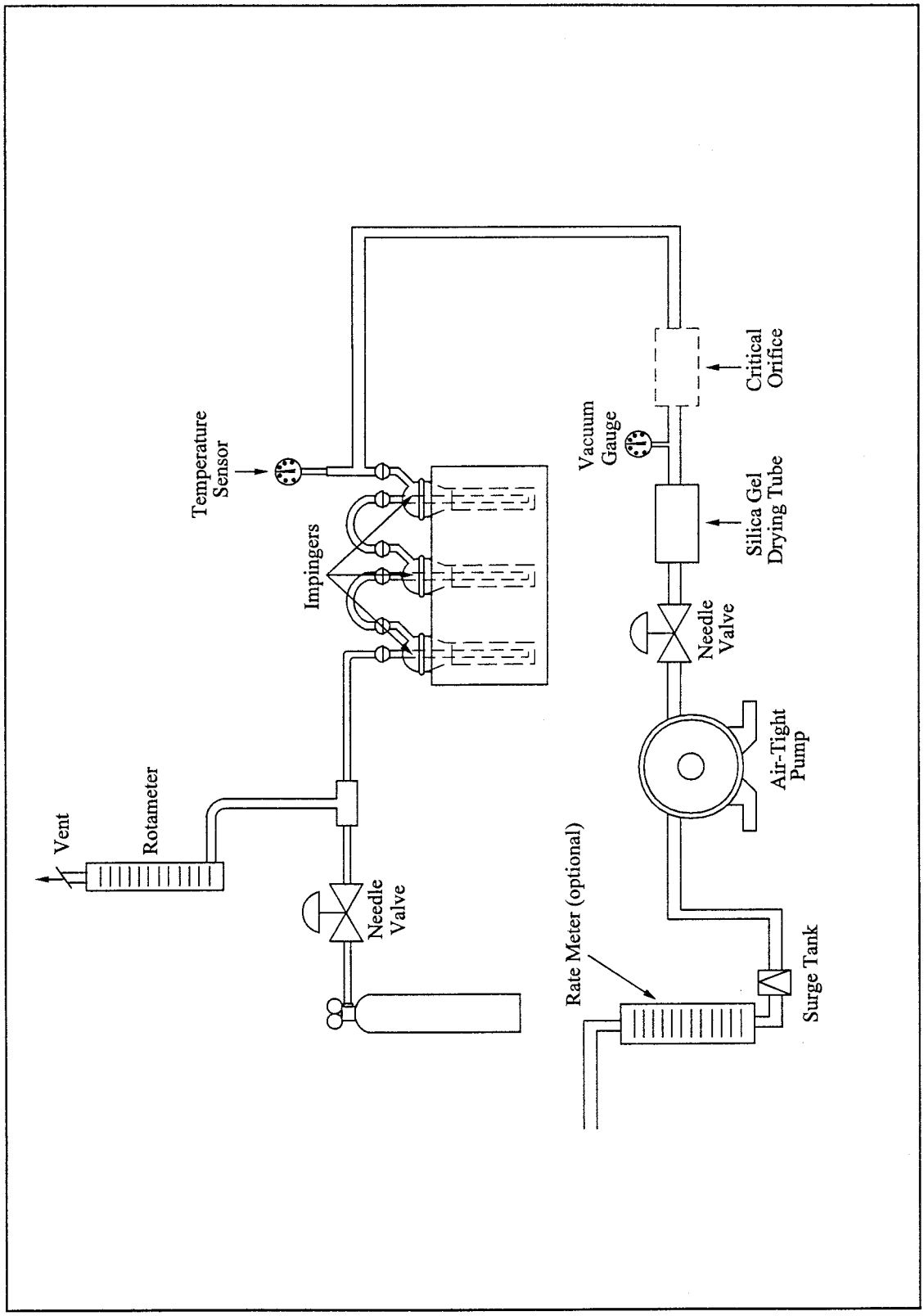

Figure 16A-4. Recovery Check Gas Sampling Train.

BILLING CODE 6560–50–C

Date
Critical orifice ID
Soap bubble meter volume, Vsb liters
Time, θsb
Run no. 1 min sec
Run no. 2 min sec
Run no. 3 min sec
Average min sec
Covert the seconds to fraction of minute:
Time = min + Sec/60 = min
Barometric pressure, P_{bar} = mm Hg
Ambient temperature, t_{amb} = 273 + °C = °K = mm Hg. (This should be approximately 0.4 times barometric pressure.)
Pump vacuum,

$$V_{sb(std)} = \frac{V_{sb}\,T_{std}\,P_{bar}\left(10^{-3}\right)}{T_{amb}\,P_{std}}$$

$$= \text{----------}\ \text{liters}$$

$$Q_{std} = \frac{V_{sb(std)}}{\Theta_{sb}}$$

$$= \text{----------}\ \text{liters/min}$$

Table 16A–1. Critical Orifice Calibration Data

Method 16B—Determination of Total Reduced Sulfur Emissions From Stationary Sources

NOTE: This method does not include all of the specifications (*e.g.*, equipment and supplies) and procedures (*e.g.*, sampling and analytical) essential to its performance. Some material is incorporated by reference from other methods in this part. Therefore, to obtain reliable results, persons using this method should have a knowledge of at least the following additional test methods: Method 6C, Method 16, and Method 16A.

1.0 Scope and Application

1.1 Analytes.

Analyte	CAS No.
Total reduced sulfur (TRS) including:	N/A
Dimethyl disulfide (DMDS), $[(CH_3)_2S_2]$	62–49–20
Dimethyl sulfide (DMS), $[(CH_3)_2S]$	75–18–3
Hydrogen sulfide (H_2S)	7783–06–4
Methyl mercaptan (MeSH), $[CH_4S]$	74–93–1
Reported as: Sulfur dioxide (SO_2)	7449–09–5

1.2 Applicability. This method is applicable for determining TRS emissions from recovery furnaces (boilers), lime kilns, and smelt dissolving tanks at kraft pulp mills, and from other sources when specified in an applicable subpart of the regulations. The flue gas must contain at least 1 percent oxygen for complete oxidation of all TRS to SO_2.

1.3 Data Quality Objectives. Adherence to the requirements of this method will enhance the quality of the data obtained from air pollutant sampling methods.

2.0 Summary of Method

2.1 An integrated gas sample is extracted from the stack. The SO_2 is removed selectively from the sample using a citrate buffer solution. The TRS compounds are then thermally oxidized to SO_2 and analyzed as SO_2 by gas chromatography (GC) using flame photometric detection (FPD).

3.0 Definitions. [Reserved]

4.0 Interferences

4.1 Reduced sulfur compounds other than those regulated by the emission standards, if present, may be measured by this method. Therefore, carbonyl sulfide, which is partially oxidized to SO_2 and may be present in a lime kiln exit stack, would be a positive interferant.

4.2 Particulate matter from the lime kiln stack gas (primarily calcium carbonate) can cause a negative bias if it is allowed to enter the citrate scrubber; the particulate matter will cause the pH to rise and H_2S to be absorbed before oxidation. Proper use of the particulate filter, described in Section 6.1.3 of Method 16A, will eliminate this interference.

4.3 Carbon monoxide (CO) and carbon dioxide (CO_2) have substantial desensitizing effects on the FPD even after dilution. Acceptable systems must demonstrate that they have eliminated this interference by some procedure such as eluting these compounds before the SO_2. Compliance with this requirement can be demonstrated by submitting chromatograms of calibration gases with and without CO_2 in diluent gas. The CO_2 level should be approximately 10 percent for the case with CO_2 present. The two chromatograms should show agreement within the precision limits of Section 13.0.

5.0 Safety

5.1 Disclaimer. This method may involve hazardous materials, operations, and equipment. This test method may not address all of the safety problems associated with its use. It is the

responsibility of the user of this test method to establish appropriate safety and health practices and determine the applicability of regulatory limitations prior to performing this test method.

5.2 Hydrogen Sulfide (H_2S). A flammable, poisonous gas with the odor of rotten eggs. H_2S is extremely hazardous and can cause collapse, coma, and death within a few seconds of one or two inhalations at sufficient concentrations. Low concentrations irritate the mucous membranes and may cause nausea, dizziness, and headache after exposure.

6.0 Equipment and Supplies

6.1 Sample Collection. The sampling train is shown in Figure 16B–1. Modifications to the apparatus are accepted provided the system performance check in Section 8.4.1 is met.

6.1.1 Probe, Probe Brush, Particulate Filter, SO_2 Scrubber, Combustion Tube, and Furnace. Same as in Method 16A, Sections 6.1.1 to 6.1.6.

6.1.2 Sampling Pump. Leakless Teflon-coated diaphragm type or equivalent.

6.2 Analysis.

6.2.1 Dilution System (optional), Gas Chromatograph, Oven, Temperature Gauges, Flow System, Flame Photometric Detector, Electrometer, Power Supply, Recorder, Calibration System, Tube Chamber, Flow System, and Constant Temperature Bath. Same as in Method 16, Sections 6.2.1, 6.2.2, and 6.3.

6.2.2 Gas Chromatograph Columns. Same as in Method 16, Section 6.2.3. Other columns with demonstrated ability to resolve SO_2 and be free from known interferences are acceptable alternatives. Single column systems such as a 7-ft Carbsorb B HT 100 column have been found satisfactory in resolving SO_2 from CO_2.

7.0 Reagents and Standards

Same as in Method 16, Section 7.0, except for the following:

7.1 Calibration Gas. SO_2 permeation tube gravimetrically calibrated and certified at some convenient operating temperature. These tubes consist of hermetically sealed FEP Teflon tubing in which a liquefied gaseous substance is enclosed. The enclosed gas permeates through the tubing wall at a constant rate. When the temperature is constant, calibration gases covering a wide range of known concentrations can be generated by varying and accurately measuring the flow rate of diluent gas passing over the tubes. In place of SO_2 permeation tubes, cylinder gases containing SO_2 in nitrogen may be used for calibration. The cylinder gas concentration must be verified according to Section 8.2.1 of Method 6C. The calibration gas is used to calibrate the GC/FPD system and the dilution system.

7.2 Recovery Check Gas.

7.2.1 Hydrogen sulfide [100 parts per million by volume (ppmv) or less] in nitrogen, stored in aluminum cylinders. Verify the concentration by Method 11, the procedure discussed in Section 16.0 of Method 16A, or gas chromatography where the instrument is calibrated with an H_2S permeation tube as described below. For the wet-chemical methods, the standard deviation should not exceed 5 percent on at least three 20-minute runs.

7.2.2 Hydrogen sulfide recovery gas generated from a permeation device gravimetrically calibrated and certified at some convenient operation temperature may be used. The permeation rate of the device must be such that at a dilution gas flow rate of 3 liters/min (64 ft^3/hr), an H_2S concentration in the range of the stack gas or within 20 percent of the emission standard can be generated.

7.3 Combustion Gas. Gas containing less than 50 ppbv reduced sulfur compounds and less than 10 ppmv total hydrocarbons. The gas may be generated from a clean-air system that purifies ambient air and consists of the following components: diaphragm pump, silica gel drying tube, activated charcoal tube, and flow rate measuring device. Gas from a compressed air cylinder is also acceptable.

8.0 Sample Collection, Preservation, Storage, and Transport

8.1 Pretest Procedures. Same as in Method 15, Section 8.1.

8.2 Sample Collection. Before any source sampling is performed, conduct a system performance check as detailed in Section 8.4.1 to validate the sampling train components and procedures. Although this test is optional, it would significantly reduce the possibility of rejecting tests as a result of failing the post-test performance check. At the completion of the pretest system performance check, insert the sampling probe into the test port making certain that no dilution air enters the stack though the port. Condition the entire system with sample for a minimum of 15 minutes before beginning analysis. If the sample is diluted, determine the dilution factor as in Section 10.4 of Method 15.

8.3 Analysis. Inject aliquots of the sample into the GC/FPD analyzer for analysis. Determine the concentration of SO_2 directly from the calibration curves or from the equation for the least-squares line.

8.4. Post-Test Procedures

8.4.1 System Performance Check. Same as in Method 16A, Section 8.5. A sufficient number of sample injections should be made so that the precision requirements of Section 13.2 are satisfied.

8.4.2 Determination of Calibration Drift. Same as in Method 15, Section 8.3.2.

9.0 Quality Control

Section	Quality control measure	Effect
8.2, 8.3	System performance check	Ensure validity of sampling train components and analytical procedure.
8.1	Sampling equipment leak-check and calibration	Ensure accurate measurement of stack gas flow rate, sample volume.
10.0	Analytical calibration	Ensure precision of analytical results within 5 percent.

10.0 Calibration

Same as in Method 16, Section 10, except SO_2 is used instead of H_2S.

11.0 Analytical Procedure

11.1 Sample collection and analysis are concurrent for this method (see section 8.3).

12.0 Data Analysis and Calculations

12.1 Nomenclature.

C_{SO2} = Sulfur dioxide concentration, ppmv.

C_{TRS} = Total reduced sulfur concentration as determined by Equation 16B–1, ppmv.

d = Dilution factor, dimensionless.
N = Number of samples.

12.2 SO_2 Concentration. Determine the concentration of SO_2, C_{SO2}, directly from the calibration curves. Alternatively, the concentration may be calculated using the equation for the least-squares line.

12.3 TRS Concentration.

$$C_{TRS} = C_{SO_2} d \qquad \text{Eq. 16B-1}$$

12.4 Average TRS Concentration

$$\text{Avg.}\, C_{TRS} = \frac{\sum_{i=1}^{n} C_{TRS}}{N} \qquad \text{Eq. 16B-2}$$

13.0 Method Performance.

13.1 Range and Sensitivity. Coupled with a GC using a 1-ml sample size, the maximum limit of the FPD for SO_2 is approximately 10 ppmv. This limit is extended by diluting the sample gas before analysis or by reducing the sample aliquot size. For sources with emission levels between 10 and 100 ppm, the measuring range can be best extended by reducing the sample size.

13.2 GC/FPD Calibration and Precision. A series of three consecutive injections of the sample calibration gas, at any dilution, must produce results which do not vary by more than 5 percent from the mean of the three injections.

13.3 Calibration Drift. The calibration drift determined from the mean of the three injections made at the beginning and end of any run or series of runs within a 24-hour period must not exceed 5 percent.

13.4 System Calibration Accuracy. Losses through the sample transport system must be measured and a correction factor developed to adjust the calibration accuracy to 100 percent.

13.5 Field tests between this method and Method 16A showed an average difference of less than 4.0 percent. This difference was not determined to be significant.

14.0 Pollution Prevention. [Reserved]

15.0 Waste Management. [Reserved]

16.0 References

1. Same as in Method 16, Section 16.0.

2. National Council of the Paper Industry for Air and Stream Improvement, Inc, A Study of TRS Measurement Methods. Technical Bulletin No. 434. New York, NY. May 1984. 12p.

3. Margeson, J.H., J.E. Knoll, and M.R. Midgett. A Manual Method for TRS Determination. Draft available from the authors. Source Branch, Quality Assurance Division, U.S. Environmental Protection Agency, Research Triangle Park, NC 27711.

BILLING CODE 6560–50–P

17.0 Tables, Diagrams, Flowcharts, and Validation Data

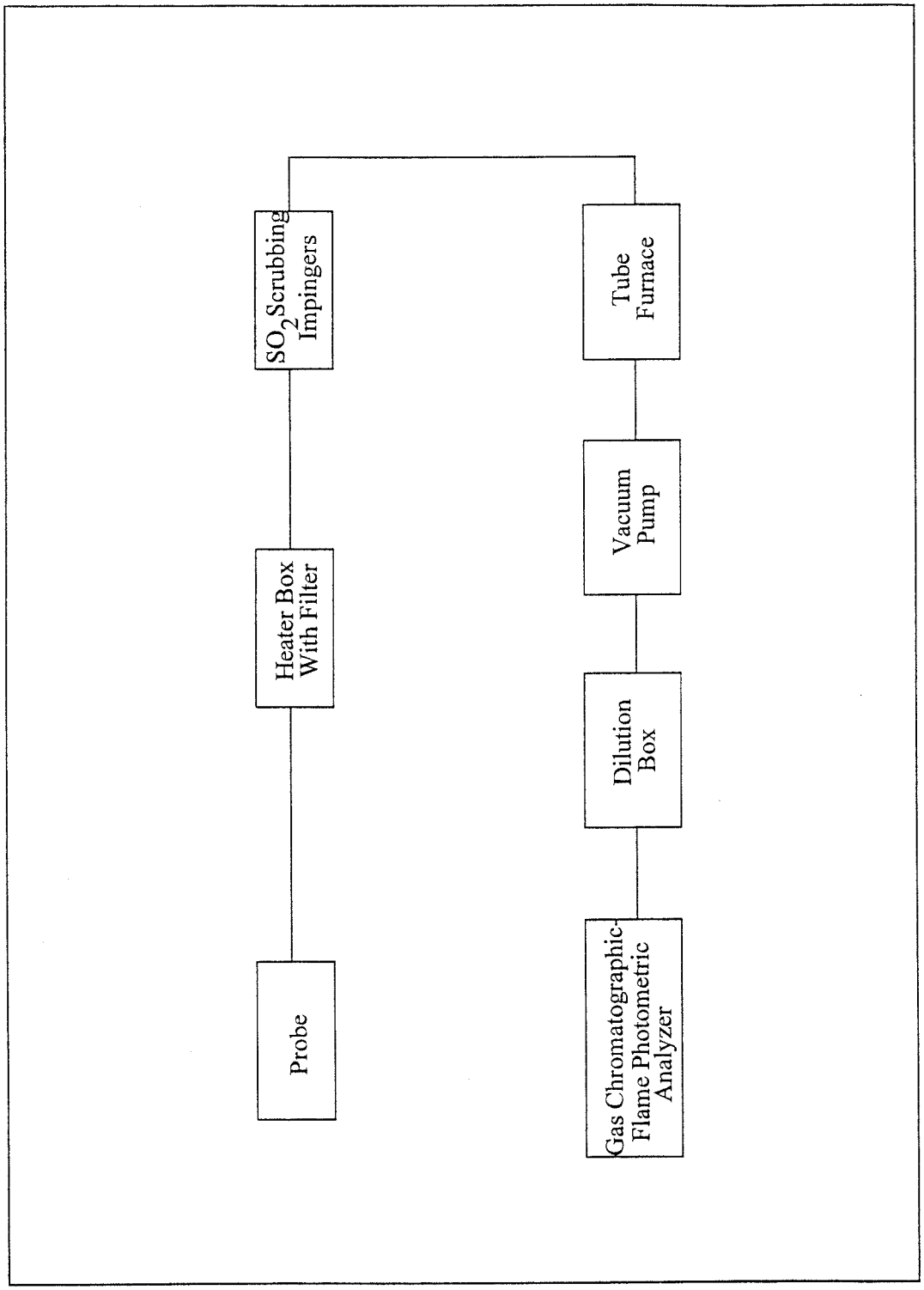

Figure 16B-1. Method 16B Sampling Train.

BILLING CODE 6560–50–C

Method 17—Determination of Particulate Matter Emissions From Stationary Sources

Note: This method does not include all of the specifications (*e.g.,* equipment and supplies) and procedures (*e.g.,* sampling and analytical) essential to its performance. Some material is incorporated by reference from other methods in this part. Therefore, to obtain reliable results, persons using this method should have a thorough knowledge of at least the following additional test methods: Method 1, Method 2, Method 3, Method 5.

1.0 Scope and Application

1.1 Analyte. Particulate matter (PM). No CAS number assigned.

Note: Particulate matter is not an absolute quantity. It is a function of temperature and pressure. Therefore, to prevent variability in PM emission regulations and/or associated test methods, the temperature and pressure at which PM is to be measured must be carefully defined. Of the two variables (*i.e.,* temperature and pressure), temperature has the greater effect upon the amount of PM in an effluent gas stream; in most stationary source categories, the effect of pressure appears to be negligible. In Method 5, 120 °C (248 °F) is established as a nominal reference temperature. Thus, where Method 5 is specified in an applicable subpart of the standard, PM is defined with respect to temperature. In order to maintain a collection temperature of 120 °C (248 °F), Method 5 employs a heated glass sample probe and a heated filter holder. This equipment is somewhat cumbersome and requires care in its operation. Therefore, where PM concentrations (over the normal range of temperature associated with a specified source category) are known to be independent of temperature, it is desirable to eliminate the glass probe and the heating systems, and to sample at stack temperature.

1.2 Applicability. This method is applicable for the determination of PM emissions, where PM concentrations are known to be independent of temperature over the normal range of temperatures characteristic of emissions from a specified source category. It is intended to be used only when specified by an applicable subpart of the standards, and only within the applicable temperature limits (if specified), or when otherwise approved by the Administrator. This method is not applicable to stacks that contain liquid droplets or are saturated with water vapor. In addition, this method shall not be used as written if the projected cross-sectional area of the probe extension-filter holder assembly covers more than 5 percent of the stack cross-sectional area (see Section 8.1.2).

1.3 Data Quality Objectives. Adherence to the requirements of this method will enhance the quality of the data obtained from air pollutant sampling methods.

2.0 Summary of Method

2.1 Particulate matter is withdrawn isokinetically from the source and collected on a glass fiber filter maintained at stack temperature. The PM mass is determined gravimetrically after the removal of uncombined water.

3.0 Definitions

Same as Method 5, Section 3.0.

4.0 Interferences. [Reserved]

5.0 Safety

5.1 Disclaimer. This method may involve hazardous materials, operations, and equipment. This test method may not address all of the safety problems associated with its use. It is the responsibility of the user of this test method to establish appropriate safety and health practices and determine the applicability of regulatory limitations prior to performing this test method.

6.0 Equipment and Supplies

6.1 Sampling Train. A schematic of the sampling train used in this method is shown in Figure 17–1. The sampling train components and operation and maintenance are very similar to Method 5, which should be consulted for details.

6.1.1 Probe Nozzle, Differential Pressure Gauge, Metering System, Barometer, Gas Density Determination Equipment. Same as in Method 5, Sections 6.1.1, 6.1.4, 6.1.8, 6.1.9, and 6.1.10, respectively.

6.1.2 Filter Holder. The in-stack filter holder shall be constructed of borosilicate or quartz glass, or stainless steel. If a gasket is used, it shall be made of silicone rubber, Teflon, or stainless steel. Other holder and gasket materials may be used, subject to the approval of the Administrator. The filter holder shall be designed to provide a positive seal against leakage from the outside or around the filter.

6.1.3 Probe Extension. Any suitable rigid probe extension may be used after the filter holder.

6.1.4 Pitot Tube. Same as in Method 5, Section 6.1.3.

6.1.4.1 It is recommended (1) that the pitot tube have a known baseline coefficient, determined as outlined in Section 10 of Method 2; and (2) that this known coefficient be preserved by placing the pitot tube in an interference-free arrangement with respect to the sampling nozzle, filter holder, and temperature sensor (see Figure 17–1). Note that the 1.9 cm (¾-in.) free-space between the nozzle and pitot tube shown in Figure 17–1, is based on a 1.3 cm (½-in.) ID nozzle. If the sampling train is designed for sampling at higher flow rates than that described in APTD-0581, thus necessitating the use of larger sized nozzles, the free-space shall be 1.9 cm (¾-in.) with the largest sized nozzle in place.

6.1.4.2 Source-sampling assemblies that do not meet the minimum spacing requirements of Figure 17–1 (or the equivalent of these requirements, *e.g.,* Figure 2–4 of Method 2) may be used; however, the pitot tube coefficients of such assemblies shall be determined by calibration, using methods subject to the approval of the Administrator.

6.1.5 Condenser. It is recommended that the impinger system or alternatives described in Method 5 be used to determine the moisture content of the stack gas. Flexible tubing may be used between the probe extension and condenser. Long tubing lengths may affect the moisture determination.

6.2 Sample Recovery. Probe-liner and probe-nozzle brushes, wash bottles, glass sample storage containers, petri dishes, graduated cylinder and/or balance, plastic storage containers, funnel and rubber policeman, funnel. Same as in Method 5, Sections 6.2.1 through 6.2.8, respectively.

6.3 Sample Analysis. Glass weighing dishes, desiccator, analytical balance, balance, beakers, hygrometer, temperature sensor. Same as in Method 5, Sections 6.3.1 through 6.3.7, respectively.

7.0 Reagents and Standards

7.1 Sampling. Filters, silica gel, water, crushed ice, stopcock grease. Same as in Method 5, Sections 7.1.1, 7.1.2, 7.1.3, 7.1.4, and 7.1.5, respectively. Thimble glass fiber filters may also be used.

7.2 Sample Recovery. Acetone (reagent grade). Same as in Method 5, Section 7.2.

7.3 Sample Analysis. Acetone and Desiccant. Same as in Method 5, Sections 7.3.1 and 7.3.2, respectively.

8.0 Sample Collection, Preservation, Storage, and Transport

8.1 Sampling.

8.1.1 Pretest Preparation. Same as in Method 5, Section 8.1.1.

8.1.2 Preliminary Determinations. Same as in Method 5, Section 8.1.2, except as follows: Make a projected-area model of the probe extension-filter holder assembly, with the pitot tube face openings positioned along the centerline of the stack, as shown in Figure 17–2. Calculate the estimated cross-section blockage, as shown in Figure 17–2. If the blockage exceeds 5 percent of the duct cross sectional area, the tester has the following options exist: (1) a suitable out-of-stack filtration

method may be used instead of in-stack filtration; or (2) a special in-stack arrangement, in which the sampling and velocity measurement sites are separate, may be used; for details concerning this approach, consult with the Administrator (see also Reference 1 in Section 17.0). Select a probe extension length such that all traverse points can be sampled. For large stacks, consider sampling from opposite sides of the stack to reduce the length of probes.

8.1.3 Preparation of Sampling Train. Same as in Method 5, Section 8.1.3, except the following: Using a tweezer or clean disposable surgical gloves, place a labeled (identified) and weighed filter in the filter holder. Be sure that the filter is properly centered and the gasket properly placed so as not to allow the sample gas stream to circumvent the filter. Check filter for tears after assembly is completed. Mark the probe extension with heat resistant tape or by some other method to denote the proper distance into the stack or duct for each sampling point. Assemble the train as in Figure 17–1, using a very light coat of silicone grease on all ground glass joints and greasing only the outer portion (see APTD–0576) to avoid possibility of contamination by the silicone grease. Place crushed ice around the impingers.

8.1.4 Leak-Check Procedures. Same as in Method 5, Section 8.1.4, except that the filter holder is inserted into the stack during the sampling train leak-check. To do this, plug the inlet to the probe nozzle with a material that will be able to withstand the stack temperature. Insert the filter holder into the stack and wait approximately 5 minutes (or longer, if necessary) to allow the system to come to equilibrium with the temperature of the stack gas stream.

8.1.5 Sampling Train Operation. The operation is the same as in Method 5. Use a data sheet such as the one shown in Figure 5–3 of Method 5, except that the filter holder temperature is not recorded.

8.1.6 Calculation of Percent Isokinetic. Same as in Method 5, Section 12.11.

8.2 Sample Recovery.

8.2.1 Proper cleanup procedure begins as soon as the probe extension assembly is removed from the stack at the end of the sampling period. Allow the assembly to cool.

8.2.2 When the assembly can be safely handled, wipe off all external particulate matter near the tip of the probe nozzle and place a cap over it to prevent losing or gaining particulate matter. Do not cap off the probe tip tightly while the sampling train is cooling down as this would create a vacuum in the filter holder, forcing condenser water backward.

8.2.3 Before moving the sample train to the cleanup site, disconnect the filter holder-probe nozzle assembly from the probe extension; cap the open inlet of the probe extension. Be careful not to lose any condensate, if present. Remove the umbilical cord from the condenser outlet and cap the outlet. If a flexible line is used between the first impinger (or condenser) and the probe extension, disconnect the line at the probe extension and let any condensed water or liquid drain into the impingers or condenser. Disconnect the probe extension from the condenser; cap the probe extension outlet. After wiping off the silicone grease, cap off the condenser inlet. Ground glass stoppers, plastic caps, or serum caps (whichever are appropriate) may be used to close these openings.

8.2.4 Transfer both the filter holder-probe nozzle assembly and the condenser to the cleanup area. This area should be clean and protected from the wind so that the chances of contaminating or losing the sample will be minimized.

8.2.5 Save a portion of the acetone used for cleanup as a blank. Take 200 ml of this acetone from the wash bottle being used and place it in a glass sample container labeled ''acetone blank.'' Inspect the train prior to and during disassembly and not any abnormal conditions. Treat the sample as discussed in Method 5, Section 8.2.

9.0 Quality Control. [Reserved]

10.0 Calibration and Standardization

The calibrations of the probe nozzle, pitot tube, metering system, temperature sensors, and barometer are the same as in Method 5, Sections 10.1 through 10.3, 10.5, and 10.6, respectively.

11.0 Analytical Procedure

Same as in Method 5, Section 11.0. Analytical data should be recorded on a form similar to that shown in Figure 5–6 of Method 5.

12.0 Data Analysis and Calculations.

Same as in Method 5, Section 12.0.

13.0 Method Performance. [Reserved]

14.0 Pollution Prevention. [Reserved]

15.0 Waste Management. [Reserved]

16.0 Alternative Procedures

Same as in Method 5, Section 16.0.

17.0 References

Same as in Method 5, Section 17.0, with the addition of the following:

1. Vollaro, R.F. Recommended Procedure for Sample Traverses in Ducts Smaller than 12 Inches in Diameter. U.S. Environmental Protection Agency, Emission Measurement Branch. Research Triangle Park, NC. November 1976.

BILLING CODE 6560–50–P

18.0 Tables, Diagrams, Flowcharts, and Validation Data

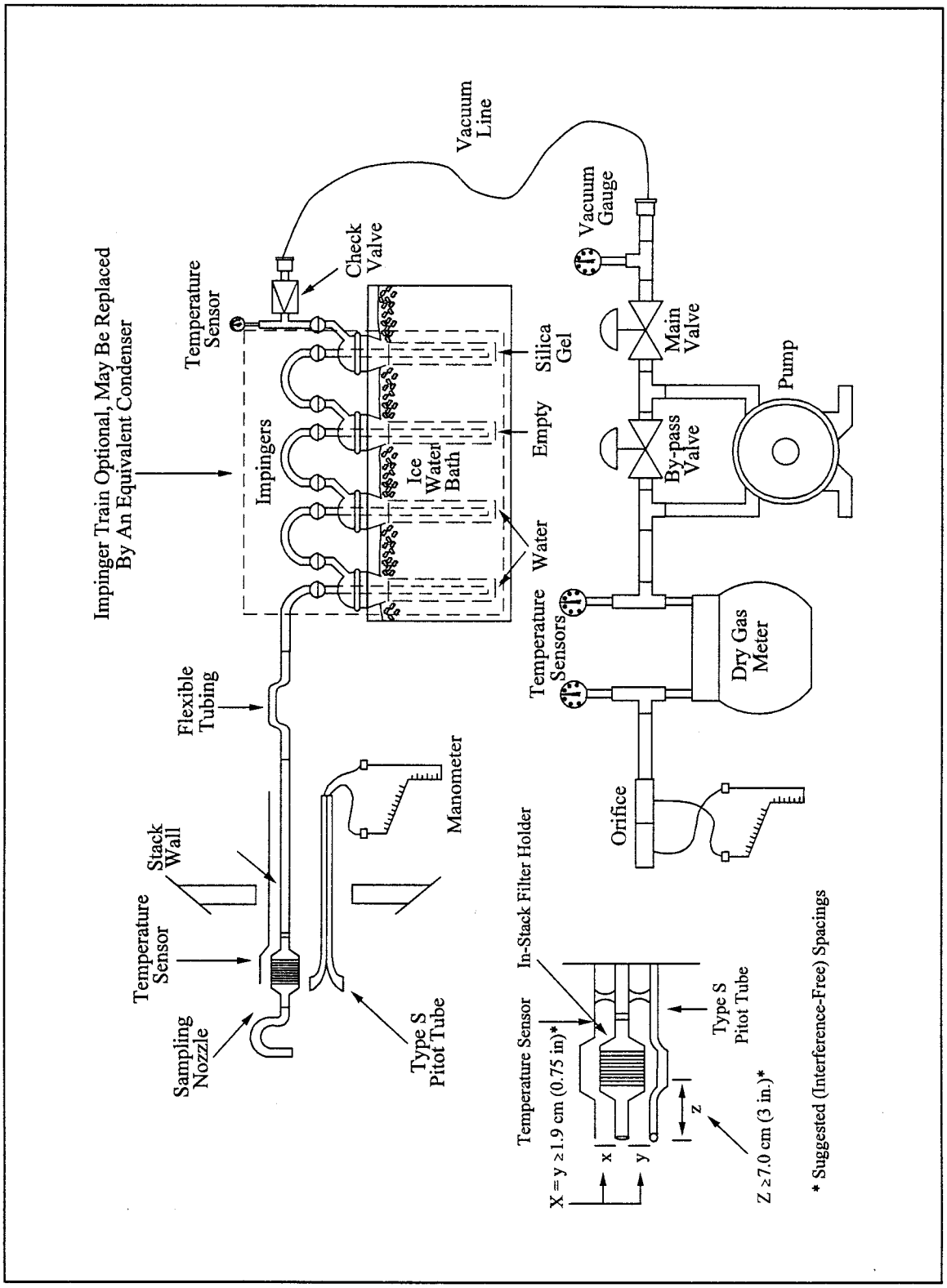

Figure 17-1. Particulate Matter Sampling Train with In-Stack Filter.

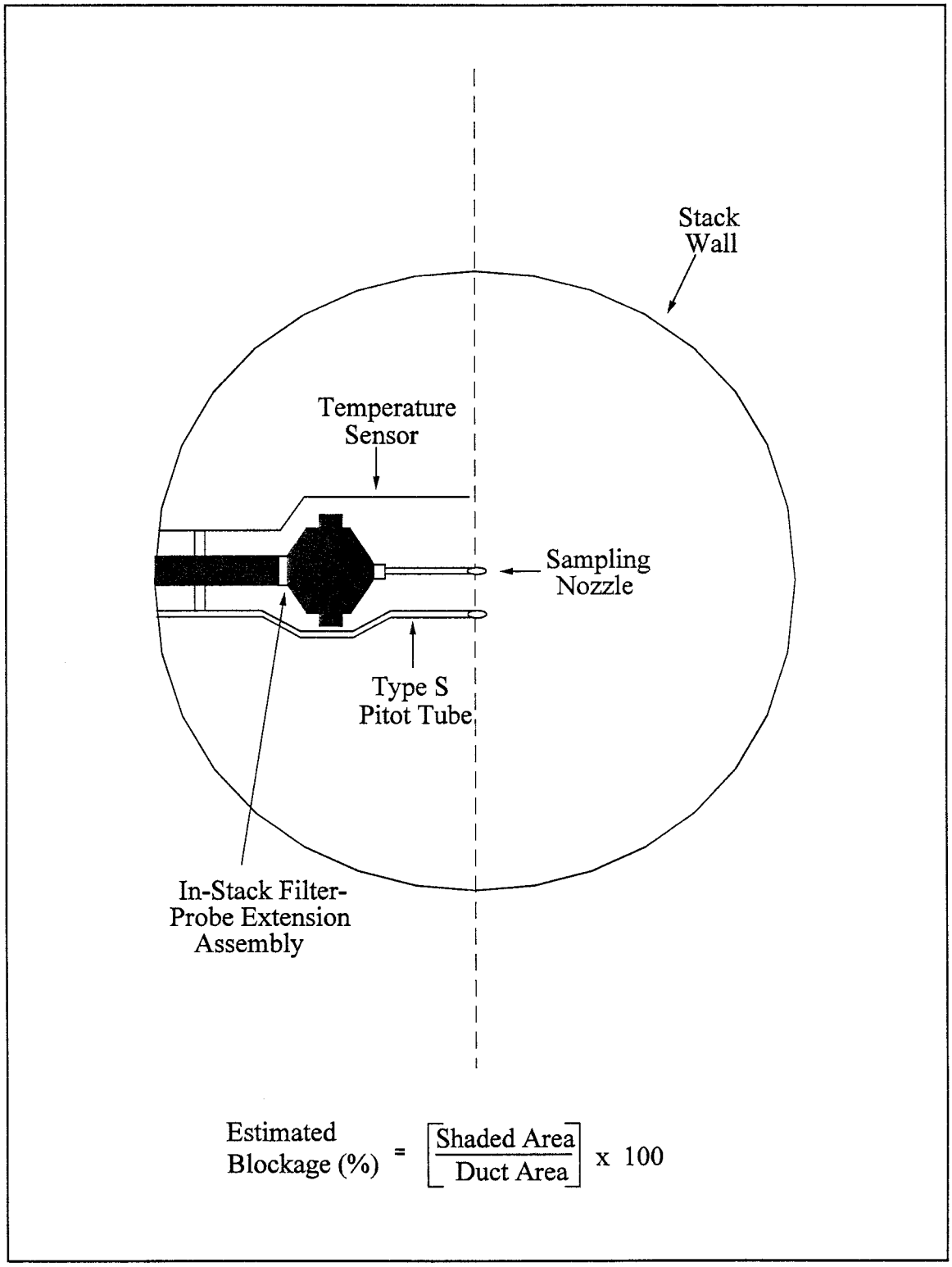

Figure 17-2. Projected-Area Model of Cross-Section Blockage (approximate average for a sample traverse) Caused by an In-Stack Filter Holder-Probe Extension Assembly.

BILLING CODE 6560–50–C

Method 18—Measurement of Gaseous Organic Compound Emissions By Gas Chromatography

Note: This method is not inclusive with respect to specifications (*e.g.*, equipment and supplies) and procedures (*e.g.*, sampling and analytical) essential to its performance. Some material is incorporated by reference from other methods in this part. Therefore, to obtain reliable results, persons using this method should have a thorough knowledge of at least the following additional test methods: Method 1, Method 2, Method 3.

Note: This method should not be attempted by persons unfamiliar with the performance characteristics of gas chromatography, nor by those persons who are unfamiliar with source sampling. Particular care should be exercised in the area of safety concerning choice of equipment and operation in potentially explosive atmospheres.

1.0 Scope and Application

1.1 Analyte. Total gaseous organic compounds.

1.2 Applicability.

1.2.1 This method is designed to measure gaseous organics emitted from an industrial source. While designed for ppm level sources, some detectors are quite capable of detecting compounds at ambient levels, *e.g.*, ECD, ELCD, and helium ionization detectors. Some other types of detectors are evolving such that the sensitivity and applicability may well be in the ppb range in only a few years.

1.2.2 This method will not determine compounds that (1) are polymeric (high molecular weight), (2) can polymerize before analysis, or (3) have very low vapor pressures at stack or instrument conditions.

1.3 Range. The lower range of this method is determined by the sampling system; adsorbents may be used to concentrate the sample, thus lowering the limit of detection below the 1 part per million (ppm) typically achievable with direct interface or bag sampling. The upper limit is governed by GC detector saturation or column overloading; the upper range can be extended by dilution of sample with an inert gas or by using smaller volume gas sampling loops. The upper limit can also be governed by condensation of higher boiling compounds.

1.4 Sensitivity. The sensitivity limit for a compound is defined as the minimum detectable concentration of that compound, or the concentration that produces a signal-to-noise ratio of three to one. The minimum detectable concentration is determined during the presurvey calibration for each compound.

2.0 Summary of Method

The major organic components of a gas mixture are separated by gas chromatography (GC) and individually quantified by flame ionization, photoionization, electron capture, or other appropriate detection principles. The retention times of each separated component are compared with those of known compounds under identical conditions. Therefore, the analyst confirms the identity and approximate concentrations of the organic emission components beforehand. With this information, the analyst then prepares or purchases commercially available standard mixtures to calibrate the GC under conditions identical to those of the samples. The analyst also determines the need for sample dilution to avoid detector saturation, gas stream filtration to eliminate particulate matter, and prevention of moisture condensation.

3.0 Definitions. [Reserved]

4.0 Interferences

4.1 Resolution interferences that may occur can be eliminated by appropriate GC column and detector choice or by shifting the retention times through changes in the column flow rate and the use of temperature programming.

4.2 The analytical system is demonstrated to be essentially free from contaminants by periodically analyzing blanks that consist of hydrocarbon-free air or nitrogen.

4.3 Sample cross-contamination that occurs when high-level and low-level samples or standards are analyzed alternately is best dealt with by thorough purging of the GC sample loop between samples.

4.4 To assure consistent detector response, calibration gases are contained in dry air. To adjust gaseous organic concentrations when water vapor is present in the sample, water vapor concentrations are determined for those samples, and a correction factor is applied.

4.5 The gas chromatograph run time must be sufficient to clear all eluting peaks from the column before proceeding to the next run (in order to prevent sample carryover).

5.0 Safety

5.1 Disclaimer. This method may involve hazardous materials, operations, and equipment. This test method may not address all of the safety problems associated with its use. It is the responsibility of the user of this test method to establish appropriate safety and health practices and determine the applicability of regulatory limitations prior to performing this test method. The analyzer users manual should be consulted for specific precautions to be taken with regard to the analytical procedure.

6.0 Equipment and Supplies

6.1 Equipment needed for the presurvey sampling procedure can be found in Section 16.1.1.

6.2 Equipment needed for the integrated bag sampling and analysis procedure can be found in Section 8.2.1.1.1.

6.3 Equipment needed for direct interface sampling and analysis can be found in Section 8.2.2.1.

6.4 Equipment needed for the dilution interface sampling and analysis can be found in Section 8.2.3.1.

6.5 Equipment needed for adsorbent tube sampling and analysis can be found in Section 8.2.4.1.

7.0 Reagents and Standards

7.1 Reagents needed for the presurvey sampling procedure can be found in Section 16.1.2.

7.2 Quality Assurance Audit Samples. When making compliance determinations, and upon availability, an audit sample may be obtained from the appropriate EPA Regional Office or from the responsible enforcement authority.

Note: The responsible enforcement autority should be notified at least 30 days prior to the test date to allow sufficient time for sample delivery.

8.0 Sample Collection, Preservation, Storage, and Transport

8.2 Final Sampling and Analysis Procedure. Considering safety (flame hazards) and the source conditions, select an appropriate sampling and analysis procedure (Section 8.2.1, 8.2.2, 8.2.3 or 8.2.4). In situations where a hydrogen flame is a hazard and no intrinsically safe GC is suitable, use the flexible bag collection technique or an adsorption technique.

8.2.1 Integrated Bag Sampling and Analysis.

8.2.1.1 Evacuated Container Sampling Procedure. In this procedure, the bags are filled by evacuating the rigid air-tight container holding the bags. Use a field sample data sheet as shown in Figure 18–10. Collect triplicate samples from each sample location.

8.2.1.1.1 Apparatus.

8.2.1.1.1.1 Probe. Stainless steel, Pyrex glass, or Teflon tubing probe, according to the duct temperature, with Teflon tubing of sufficient length to connect to the sample bag. Use stainless

steel or Teflon unions to connect probe and sample line.

8.2.1.1.1.2 Quick Connects. Male (2) and female (2) of stainless steel construction.

8.2.1.1.1.3 Needle Valve. To control gas flow.

8.2.1.1.1.4 Pump. Leakless Teflon-coated diaphragm-type pump or equivalent. To deliver at least 1 liter/min.

8.2.1.1.1.5 Charcoal Adsorption Tube. Tube filled with activated charcoal, with glass wool plugs at each end, to adsorb organic vapors.

8.2.1.1.1.6 Flowmeter. 0 to 500-ml flow range; with manufacturer's calibration curve.

8.2.1.1.2 Sampling Procedure. To obtain a sample, assemble the sample train as shown in Figure 18–9. Leak-check both the bag and the container. Connect the vacuum line from the needle valve to the Teflon sample line from the probe. Place the end of the probe at the centroid of the stack or at a point no closer to the walls than 1 m, and start the pump. Set the flow rate so that the final volume of the sample is approximately 80 percent of the bag capacity. After allowing sufficient time to purge the line several times, connect the vacuum line to the bag, and evacuate until the rotameter indicates no flow. Then position the sample and vacuum lines for sampling, and begin the actual sampling, keeping the rate proportional to the stack velocity. As a precaution, direct the gas exiting the rotameter away from sampling personnel. At the end of the sample period, shut off the pump, disconnect the sample line from the bag, and disconnect the vacuum line from the bag container. Record the source temperature, barometric pressure, ambient temperature, sampling flow rate, and initial and final sampling time on the data sheet shown in Figure 18–10. Protect the Tedlar bag and its container from sunlight. Record the time lapsed between sample collection and analysis, and then conduct the recovery procedure in Section 8.4.2.

8.2.1.2 Direct Pump Sampling Procedure. Follow 8.2.1.1, except place the pump and needle valve between the probe and the bag. Use a pump and needle valve constructed of inert material not affected by the stack gas. Leak-check the system, and then purge with stack gas before connecting to the previously evacuated bag.

8.2.1.3 Explosion Risk Area Bag Sampling Procedure. Follow 8.2.1.1 except replace the pump with another evacuated can (see Figure 18–9a). Use this method whenever there is a possibility of an explosion due to pumps, heated probes, or other flame producing equipment.

8.2.1.4 Other Modified Bag Sampling Procedures. In the event that condensation is observed in the bag while collecting the sample and a direct interface system cannot be used, heat the bag during collection, and maintain it at a suitably elevated temperature during all subsequent operations. (**Note:** Take care to leak-check the system prior to the dilutions so as not to create a potentially explosive atmosphere.) As an alternative, collect the sample gas, and simultaneously dilute it in the Tedlar bag.

8.2.1.4.1 First Alternative Procedure. Heat the box containing the sample bag to 120 °C (±5 °C). Then transport the bag as rapidly as possible to the analytical area while maintaining the heating, or cover the box with an insulating blanket. In the analytical area, keep the box heated to 120 °C (±5 °C) until analysis. Be sure that the method of heating the box and the control for the heating circuit are compatible with the safety restrictions required in each area.

8.2.1.4.2 Second Alternative Procedure. Prefill the Tedlar bag with a known quantity of inert gas. Meter the inert gas into the bag according to the procedure for the preparation of gas concentration standards of volatile liquid materials (Section 10.1.2.2), but eliminate the midget impinger section. Take the partly filled bag to the source, and meter the source gas into the bag through heated sampling lines and a heated flowmeter, or Teflon positive displacement pump. Verify the dilution factors before sampling each bag through dilution and analysis of gases of known concentration.

8.2.1.5 Analysis of Bag Samples.

8.2.1.5.1 Apparatus. Same as Section 8.1. A minimum of three gas standards are required.

8.2.1.5.2 Procedure.

8.2.1.5.2.1 Establish proper GC operating conditions as described in Section 10.2, and record all data listed in Figure 18–7. Prepare the GC so that gas can be drawn through the sample valve. Flush the sample loop with calibration gas mixture, and activate the valve (sample pressure at the inlet to the GC introduction valve should be similar during calibration as during actual sample analysis). Obtain at least three chromatograms for the mixture. The results are acceptable when the peak areas for the three injections agree to within 5 percent of their average. If they do not agree, run additional samples or correct the analytical techniques until this requirement is met. Then analyze the other two calibration mixtures in the same manner. Prepare a calibration curve as described in Section 10.2.

8.2.1.5.2.2 Analyze the two field audit samples as described in Section 9.2 by connecting each Tedlar bag containing an audit gas mixture to the sampling valve. Calculate the results; record and report the data to the audit supervisor.

8.2.1.5.2.3 Analyze the three source gas samples by connecting each bag to the sampling valve with a piece of Teflon tubing identified with that bag. Analyze each bag sample three times. Record the data in Figure 18–11. If certain items do not apply, use the notation ''N.A.'' If the bag has been maintained at an elevated temperature as described in Section 8.2.1.4, determine the stack gas water content by Method 4. After all samples have been analyzed, repeat the analysis of the mid-level calibration gas for each compound. Compare the average response factor of the pre- and post-test analysis for each compound. If they differ by >5percent, analyze the other calibration gas levels for that compound, and prepare a calibration curve using all the pre- and post-test calibration gas mixture values. If the two response factor averages (pre- and post-test) differ by less than 5 percent from their mean value, the tester has the option of using only the pre-test calibration curve to generate the concentration values.

8.2.1.6 Determination of Bag Water Vapor Content. Measure the ambient temperature and barometric pressure near the bag. From a water saturation vapor pressure table, determine and record the water vapor content of the bag as a decimal figure. (Assume the relative humidity to be 100 percent unless a lesser value is known.) If the bag has been maintained at an elevated temperature as described in Section 8.2.1.4, determine the stack gas water content by Method 4.

8.2.1.7 Audit Gas Analysis. Immediately prior to the analysis of the stack gas samples, perform audit analyses as described in Section 9.2.

8.2.1.8 Emission Calculations. From the calibration curve described in Section 8.2.1.5, select the value of C_s that corresponds to the peak area. Calculate the concentration C_c in ppm, dry basis, of each organic in the sample using Equation 18–5 in Section 12.6.

8.2.2 Direct Interface Sampling and Analysis Procedure. The direct interface procedure can be used provided that the moisture content of the gas does not interfere with the analysis procedure, the physical requirements of the equipment can be met at the site, and the source gas concentration falls within the linear range of the detector. Adhere

to all safety requirements with this method.

8.2.2.1 Apparatus.

8.2.2.1.1 Probe. Constructed of stainless steel, Pyrex glass, or Teflon tubing as dictated by duct temperature and reactivity of target compounds. A filter or glass wool plug may be needed if particulate is present in the stack gas. If necessary, heat the probe with heating tape or a special heating unit capable of maintaining a temperature greater than 110 °C.

8.2.2.1.2 Sample Lines. 6.4-mm OD (or other diameter as needed) Teflon lines, heat-traced to prevent condensation of material (greater than 110 °C).

8.2.2.1.3 Quick Connects. To connect sample line to gas sampling valve on GC instrument and to pump unit used to withdraw source gas. Use a quick connect or equivalent on the cylinder or bag containing calibration gas to allow connection of the calibration gas to the gas sampling valve.

8.2.2.1.4 Thermocouple Readout Device. Potentiometer or digital thermometer, to measure source temperature and probe temperature.

8.2.2.1.5 Heated Gas Sampling Valve. Of two-position, six-port design, to allow sample loop to be purged with source gas or to direct source gas into the GC instrument.

8.2.2.1.6 Needle Valve. To control gas sampling rate from the source.

8.2.2.1.7 Pump. Leakless Teflon-coated diaphragm-type pump or equivalent, capable of at least 1 liter/minute sampling rate.

8.2.2.1.8 Flowmeter. Of suitable range to measure sampling rate.

8.2.2.1.9 Charcoal Adsorber. To adsorb organic vapor vented from the source to prevent exposure of personnel to source gas.

8.2.2.1.10 Gas Cylinders. Carrier gas, oxygen and fuel as needed to run GC and detector.

8.2.2.1.11 Gas Chromatograph. Capable of being moved into the field, with detector, heated gas sampling valve, column required to complete separation of desired components, and option for temperature programming.

8.2.2.1.12 Recorder/Integrator. To record results.

8.2.2.2 Procedure. Calibrate the GC using the procedures in Section 8.2.1.5.2.1. To obtain a stack gas sample, assemble the sampling system as shown in Figure 18–12. Make sure all connections are tight. Turn on the probe and sample line heaters. As the temperature of the probe and heated line approaches the target temperature as indicated on the thermocouple readout device, control the heating to maintain a temperature greater than 110 °C. Conduct a 3-point calibration of the GC by analyzing each gas mixture in triplicate. Generate a calibration curve. Place the inlet of the probe at the centroid of the duct, or at a point no closer to the walls than 1 m, and draw source gas into the probe, heated line, and sample loop. After thorough flushing, analyze the stack gas sample using the same conditions as for the calibration gas mixture. For each run, sample, analyze, and record five consecutive samples. A test consists of three runs (five samples per run times three runs, for a total of fifteen samples). After all samples have been analyzed, repeat the analysis of the mid-level calibration gas for each compound. For each calibration standard, compare the pre- and post-test average response factors (RF) for each compound. If the two calibration RF values (pre- and post-analysis) differ by more than 5 percent from their mean value, then analyze the other calibration gas levels for that compound and determine the stack gas sample concentrations by comparison to both calibration curves (this is done by preparing a calibration curve using all the pre and post-test calibration gas mixture values). If the two calibration RF values differ by less than 5 percent from their mean value, the tester has the option of using only the pre-test calibration curve to generate the concentration values. Record this calibration data and the other required data on the data sheet shown in Figure 18–11, deleting the dilution gas information.

Note: Take care to draw all samples, calibration mixtures, and audits through the sample loop at the same pressure.

8.2.2.3 Determination of Stack Gas Moisture Content. Use Method 4 to measure the stack gas moisture content.

8.2.2.4 Quality Assurance. Same as Section 8.2.1.7. Introduce the audit gases in the sample line immediately following the probe.

8.2.2.5 Emission Calculations. Same as Section 8.2.1.8.

8.2.3 Dilution Interface Sampling and Analysis Procedure. Source samples that contain a high concentration of organic materials may require dilution prior to analysis to prevent saturating the GC detector. The apparatus required for this direct interface procedure is basically the same as that described in the Section 8.2.2, except a dilution system is added between the heated sample line and the gas sampling valve. The apparatus is arranged so that either a 10:1 or 100:1 dilution of the source gas can be directed to the chromatograph. A pump of larger capacity is also required, and this pump must be heated and placed in the system between the sample line and the dilution apparatus.

8.2.3.1 Apparatus. The equipment required in addition to that specified for the direct interface system is as follows:

8.2.3.1.1 Sample Pump. Leakless Teflon-coated diaphragm-type that can withstand being heated to 120°C and deliver 1.5 liters/minute.

8.2.3.1.2 Dilution Pumps. Two Model A–150 Komhyr Teflon positive displacement type delivering 150 cc/minute, or equivalent. As an option, calibrated flowmeters can be used in conjunction with Teflon-coated diaphragm pumps.

8.2.3.1.3 Valves. Two Teflon three-way valves, suitable for connecting to Teflon tubing.

8.2.3.1.4 Flowmeters. Two, for measurement of diluent gas.

8.2.3.1.5 Diluent Gas with Cylinders and Regulators. Gas can be nitrogen or clean dry air, depending on the nature of the source gases.

8.2.3.1.6 Heated Box. Suitable for being heated to 120 °C, to contain the three pumps, three-way valves, and associated connections. The box should be equipped with quick connect fittings to facilitate connection of: (1) the heated sample line from the probe, (2) the gas sampling valve, (3) the calibration gas mixtures, and (4) diluent gas lines. A schematic diagram of the components and connections is shown in Figure 18–13. The heated box shown in Figure 18–13 is designed to receive a heated line from the probe. An optional design is to build a probe unit that attaches directly to the heated box. In this way, the heated box contains the controls for the probe heaters, or, if the box is placed against the duct being sampled, it may be possible to eliminate the probe heaters. In either case, a heated Teflon line is used to connect the heated box to the gas sampling valve on the chromatograph.

Note: Care must be taken to leak-check the system prior to the dilutions so as not to create a potentially explosive atmosphere.

8.2.3.2 Procedure.

8.2.3.2.1 Assemble the apparatus by connecting the heated box, shown in Figure 18–13, between the heated sample line from the probe and the gas sampling valve on the chromatograph. Vent the source gas from the gas sampling valve directly to the charcoal filter, eliminating the pump and rotameter. Heat the sample probe, sample line, and heated box. Insert the probe and source thermocouple at the centroid of the duct, or to a point no closer to the walls than 1 m. Measure the source temperature, and adjust all

heating units to a temperature 0 to 3°C above this temperature. If this temperature is above the safe operating temperature of the Teflon components, adjust the heating to maintain a temperature high enough to prevent condensation of water and organic compounds (greater than 110 °C). Calibrate the GC through the dilution system by following the procedures in Section 8.2.1.5.2.1. Determine the concentration of the diluted calibration gas using the dilution factor and the certified concentration of the calibration gas. Record the pertinent data on the data sheet shown in Figure 18–11.

8.2.3.2.2 Once the dilution system and GC operations are satisfactory, proceed with the analysis of source gas, maintaining the same dilution settings as used for the standards.

8.2.3.2.3 Analyze the audit samples using either the dilution system, or directly connect to the gas sampling valve as required. Record all data and report the results to the audit supervisor.

8.2.3.3 Determination of Stack Gas Moisture Content. Same as Section 8.2.2.3.

8.2.3.4 Quality Assurance. Same as Section 8.2.2.4.

8.2.3.5 Emission Calculations. Same as section 8.2.2.5, with the dilution factor applied.

8.2.4 Adsorption Tube Procedure. Any commercially available adsorbent is allowed for the purposes of this method, as long as the recovery study criteria in Section 8.4.3 are met. Help in choosing the adsorbent may be found by calling the distributor, or the tester may refer to National Institute for Occupational Safety and Health (NIOSH) methods for the particular organics to be sampled. For some adsorbents, the principal interferent will be water vapor. If water vapor is thought to be a problem, the tester may place a midget impinger in an ice bath before the adsorbent tubes. If this option is chosen, the water catch in the midget impinger shall be analyzed for the target compounds. Also, the spike for the recovery study (in Section 8.4.3) shall be conducted in both the midget impinger and the adsorbent tubes. The combined recovery (add the recovered amount in the impinger and the adsorbent tubes to calculate R) shall then meet the criteria in Section 8.4.3.

Note: Post-test leak-checks are not allowed for this technique since this can result in sample contamination.

8.2.4.1 Additional Apparatus. The following items (or equivalent) are suggested.

8.2.4.1.1 Probe. Borosilicate glass or stainless steel, approximately 6-mm ID, with a heating system if water condensation is a problem, and a filter (either in-stack or out-of-stack, heated to stack temperature) to remove particulate matter. In most instances, a plug of glass wool is a satisfactory filter.

8.2.4.1.2 Flexible Tubing. To connect probe to adsorption tubes. Use a material that exhibits minimal sample adsorption.

8.2.4.1.3 Leakless Sample Pump. Flow controlled, constant rate pump, with a set of limiting (sonic) orifices.

8.2.4.1.4 Bubble-Tube Flowmeter. Volume accuracy within 1 percent, to calibrate pump.

8.2.4.1.5 Stopwatch. To time sampling and pump rate calibration.

8.2.4.1.6 Adsorption Tubes. Precleaned adsorbent, with mass of adsorbent to be determined by calculating breakthrough volume and expected concentration in the stack.

8.2.4.1.7 Barometer. Accurate to 5 mm Hg, to measure atmospheric pressure during sampling and pump calibration.

8.2.4.1.8 Rotameter. O to 100 cc/min, to detect changes in flow rate during sampling.

8.2.4.2 Sampling and Analysis.

8.2.4.2.1 Calibrate the pump and limiting orifice flow rate through adsorption tubes with the bubble tube flowmeter before sampling. The sample system can be operated as a ''recirculating loop'' for this operation. Record the ambient temperature and barometric pressure. Then, during sampling, use the rotameter to verify that the pump and orifice sampling rate remains constant.

8.2.4.2.2 Use a sample probe, if required, to obtain the sample at the centroid of the duct, or at a point no closer to the walls than 1 m. Minimize the length of flexible tubing between the probe and adsorption tubes. Several adsorption tubes can be connected in series, if the extra adsorptive capacity is needed. Adsorption tubes should be maintained vertically during the test in order to prevent channeling. Provide the gas sample to the sample system at a pressure sufficient for the limiting orifice to function as a sonic orifice. Record the total time and sample flow rate (or the number of pump strokes), the barometric pressure, and ambient temperature. Obtain a total sample volume commensurate with the expected concentration(s) of the volatile organic(s) present, and recommended sample loading factors (weight sample per weight adsorption media). Laboratory tests prior to actual sampling may be necessary to predetermine this volume. If water vapor is present in the sample at concentrations above 2 to 3 percent, the adsorptive capacity may be severely reduced. Operate the gas chromatograph according to the manufacturer's instructions. After establishing optimum conditions, verify and document these conditions during all operations. Calibrate the instrument. Analyze the audit samples (see Section 16.1.4.3), then the emission samples.

8.2.4.3 Standards and Calibration. If using thermal desorption, obtain calibration gases using the procedures in Section 10.1. If using solvent extraction, prepare liquid standards in the desorption solvent. Use a minimum of three different standards; select the concentrations to bracket the expected average sample concentration. Perform the calibration before and after each day's sample analyses using the procedures in Section 8.2.1.5.2.1.

8.2.4.4 Quality Assurance.

8.2.4.4.1 Determine the recovery efficiency of the pollutants of interest according to Section 8.4.3.

8.2.4.4.2 Determination of Sample Collection Efficiency (Optional). If sample breakthrough is thought to be a problem, a routine procedure for determining breakthrough is to analyze the primary and backup portions of the adsorption tubes separately. If the backup portion exceeds 10 percent of the total amount (primary and back-up), it is usually a sign of sample breakthrough. For the purposes of this method, only the recovery efficiency value (Section 8.4.3) is used to determine the appropriateness of the sampling and analytical procedure.

8.2.4.4.3 Volume Flow Rate Checks. Perform this check immediately after sampling with all sampling train components in place. Use the bubble-tube flowmeter to measure the pump volume flow rate with the orifice used in the test sampling, and record the result. If it has changed by more than 5 but less than 20 percent, calculate an average flow rate for the test. If the flow rate has changed by more than 20 percent, recalibrate the pump and repeat the sampling.

8.2.4.4.4 Calculations. Correct all sample volumes to standard conditions. If a sample dilution system has been used, multiply the results by the appropriate dilution ratio. Correct all results according to the applicable procedure in Section 8.4.3. Report results as ppm by volume, dry basis.

8.3 Reporting of Results. At the completion of the field analysis portion of the study, ensure that the data sheets shown in Figure 18–11 have been completed. Summarize this data on the data sheets shown in Figure 18–15.

8.4 Recovery Study. After conducting the presurvey and

identifying all of the pollutants of interest, conduct the appropriate recovery study during the test based on the sampling system chosen for the compounds of interest.

8.4.1 Recovery Study for Direct Interface or Dilution Interface Sampling. If the procedures in Section 8.2.2 or 8.2.3 are to be used to analyze the stack gas, conduct the calibration procedure as stated in Section 8.2.2.2 or 8.2.3.2, as appropriate. Upon successful completion of the appropriate calibration procedure, attach the mid-level calibration gas for at least one target compound to the inlet of the probe or as close as possible to the inlet of the probe, but before the filter. Repeat the calibration procedure by sampling and analyzing the mid-level calibration gas through the entire sampling and analytical system in triplicate. The mean of the calibration gas response sampled through the probe shall be within 10 percent of the analyzer response. If the difference in the two means is greater than 10 percent, check for leaks throughout the sampling system and repeat the analysis of the standard through the sampling system until this criterion is met.

8.4.2 Recovery Study for Bag Sampling.

8.4.2.1 Follow the procedures for the bag sampling and analysis in Section 8.2.1. After analyzing all three bag samples, choose one of the bag samples and tag this bag as the spiked bag. Spike the chosen bag sample with a known mixture (gaseous or liquid) of all of the target pollutants. The theoretical concentration, in ppm, of each spiked compound in the bag shall be 40 to 60 percent of the average concentration measured in the three bag samples. If a target compound was not detected in the bag samples, the concentration of that compound to be spiked shall be 5 times the limit of detection for that compound. Store the spiked bag for the same period of time as the bag samples collected in the field. After the appropriate storage time has passed, analyze the spiked bag three times. Calculate the average fraction recovered (R) of each spiked target compound with the equation in Section 12.7.

8.4.2.2 For the bag sampling technique to be considered valid for a compound, $0.70 \leq R \leq 1.30$. If the R value does not meet this criterion for a target compound, the sampling technique is not acceptable for that compound, and therefore another sampling technique shall be evaluated for acceptance (by repeating the recovery study with another sampling technique). Report the R value in the test report and correct all field measurements with the calculated R value for that compound by using the equation in Section 12.8.

8.4.3 Recovery Study for Adsorption Tube Sampling. If following the adsorption tube procedure in Section 8.2.4, conduct a recovery study of the compounds of interest during the actual field test. Set up two identical sampling trains. Collocate the two sampling probes in the stack. The probes shall be placed in the same horizontal plane, where the first probe tip is 2.5 cm from the outside edge of the other. One of the sampling trains shall be designated the spiked train and the other the unspiked train. Spike all of the compounds of interest (in gaseous or liquid form) onto the adsorbent tube(s) in the spiked train before sampling. The mass of each spiked compound shall be 40 to 60 percent of the mass expected to be collected with the unspiked train. Sample the stack gas into the two trains simultaneously. Analyze the adsorbents from the two trains utilizing identical analytical procedures and instrumentation. Determine the fraction of spiked compound recovered (R) using the equations in Section 12.9.

8.4.3.1 Repeat the procedure in Section 8.4.3 twice more, for a total of three runs. In order for the adsorbent tube sampling and analytical procedure to be acceptable for a compound, $0.70 \leq R \leq 1.30$ (R in this case is the average of three runs). If the average R value does not meet this criterion for a target compound, the sampling technique is not acceptable for that compound, and therefore another sampling technique shall be evaluated for acceptance (by repeating the recovery study with another sampling technique). Report the R value in the test report and correct all field measurements with the calculated R value for that compound by using the equation in Section 12.8.

9.0 Quality Control

9.1 Miscellaneous Quality Control Measures

Section	Quality control measure	Effect
8.4.1	Recovery study for direct interface or dilution interface sampling.	Ensure that there are no significant leaks in the sampling system.
8.4.2	Recovery study for bag sampling	Demonstrate that proper sampling/analysis procedures were selected.
8.4.3	Recovery study for adsorption tube sampling	Demonstrate that proper sampling/analysis procedures were selected.

9.2 Quality Assurance for Laboratory Procedures. Immediately after the preparation of the calibration curves, the analysis audit described in 40 CFR Part 61, Appendix C, Procedure 2: ''Procedure for Field Auditing GC Analysis,'' should be performed if audit materials are available. The information required to document the analysis of the audit samples has been included on the example data sheets shown in Figures 18–3 and 18–7. The audit analyses should agree with the certified audit concentrations within 10 percent. Audit sample results shall be submitted according to directions provided with the audit samples.

10.0 Calibration and Standardization.

10.1 Calibration Standards. Obtain calibration gas standards for each target compound to be analyzed. Commercial cylinder gases certified by the manufacturer to be accurate to within 1 percent of the certified label value are preferable, although cylinder gases certified by the manufacturer to 2 percent accuracy are allowed. Another option allowed by this method is for the tester to obtain high concentration certified cylinder gases and then use a dilution system meeting the requirements of Test Method 205, 40 CFR Part 51, Appendix M to make multi-level calibration gas standards. Prepare or obtain enough calibration standards so that there are three different concentrations of each organic compound expected to be measured in the source sample. For each organic compound, select those concentrations that bracket the concentrations expected in the source samples. A calibration standard may contain more than one organic compound. If samples are collected in adsorbent tubes and extracted using solvent extraction, prepare or obtain standards in the same solvent used for the sample extraction procedure. Verify the stability of all

standards for the time periods they are used.

10.2 Preparation of Calibration Curves.

10.2.1 Establish proper GC conditions, then flush the sampling loop for 30 seconds. Allow the sample loop pressure to equilibrate to atmospheric pressure, and activate the injection valve. Record the standard concentration, attenuator factor, injection time, chart speed, retention time, peak area, sample loop temperature, column temperature, and carrier gas flow rate. Analyze each standard in triplicate.

10.2.2 Repeat this procedure for each standard. Prepare a graphical plot of concentration (C_s) versus the calibration area values. Perform a regression analysis, and draw the least square line.

11.0 Analytical Procedures

11.1 Analysis Development

11.1.1 Selection of GC Parameters

11.1.1.1 Column Choice. Based on the initial contact with plant personnel concerning the plant process and the anticipated emissions, choose a column that provides good resolution and rapid analysis time. The choice of an appropriate column can be aided by a literature search, contact with manufacturers of GC columns, and discussion with personnel at the emission source.

Note: Most column manufacturers keep excellent records on their products. Their technical service departments may be able to recommend appropriate columns and detector type for separating the anticipated compounds, and they may be able to provide information on interferences, optimum operating conditions, and column limitations. Plants with analytical laboratories may be able to provide information on their analytical procedures.

11.1.1.2 Preliminary GC Adjustment. Using the standards and column obtained in Section 11.1.1.1, perform initial tests to determine appropriate GC conditions that provide good resolution and minimum analysis time for the compounds of interest.

11.1.1.3 Preparation of Presurvey Samples. If the samples were collected on an adsorbent, extract the sample as recommended by the manufacturer for removal of the compounds with a solvent suitable to the type of GC analysis. Prepare other samples in an appropriate manner.

11.1.1.4 Presurvey Sample Analysis.

11.1.1.4.1 Before analysis, heat the presurvey sample to the duct temperature to vaporize any condensed material. Analyze the samples by the GC procedure, and compare the retention times against those of the calibration samples that contain the components expected to be in the stream. If any compounds cannot be identified with certainty by this procedure, identify them by other means such as GC/mass spectroscopy (GC/MS) or GC/infrared techniques. A GC/MS system is recommended.

11.1.1.4.2 Use the GC conditions determined by the procedure of Section 11.1.1.2 for the first injection. Vary the GC parameters during subsequent injections to determine the optimum settings. Once the optimum settings have been determined, perform repeat injections of the sample to determine the retention time of each compound. To inject a sample, draw sample through the loop at a constant rate (100 ml/min for 30 seconds). Be careful not to pressurize the gas in the loop. Turn off the pump and allow the gas in the sample loop to come to ambient pressure. Activate the sample valve, and record injection time, loop temperature, column temperature, carrier flow rate, chart speed, and attenuator setting. Calculate the retention time of each peak using the distance from injection to the peak maximum divided by the chart speed. Retention times should be repeatable within 0.5 seconds.

11.1.1.4.3 If the concentrations are too high for appropriate detector response, a smaller sample loop or dilutions may be used for gas samples, and, for liquid samples, dilution with solvent is appropriate. Use the standard curves (Section 10.2) to obtain an estimate of the concentrations.

11.1.1.4.4 Identify all peaks by comparing the known retention times of compounds expected to be in the retention times of peaks in the sample. Identify any remaining unidentified peaks which have areas larger than 5 percent of the total using a GC/MS, or estimation of possible compounds by their retention times compared to known compounds, with confirmation by further GC analysis.

12.0 Data Analysis and Calculations

12.1 Nomenclature.

B_{ws} = Water vapor content of the bag sample or stack gas, proportion by volume.

C_s = Concentration of the organic from the calibration curve, ppm.

G_v = Gas volume or organic compound injected, ml.

L_v = Liquid volume of organic injected, µl.

M = Molecular weight of organic, g/g-mole.

m_s = Total mass of compound measured on adsorbent with spiked train (µg).

m_u = Total mass of compound measured on adsorbent with unspiked train (µg).

m_v = Mass per volume of spiked compound measured (µg/L).

P_i = Barometric or absolute sample loop pressure at time of sample analysis, mm Hg.

P_m = Absolute pressure of dry gas meter, mm Hg.

P_r = Reference pressure, the barometric pressure or absolute sample loop pressure recorded during calibration, mm Hg.

P_s = Absolute pressure of syringe before injection, mm Hg.

q_c = Flow rate of the calibration gas to be diluted.

q_{c1} = Flow rate of the calibration gas to be diluted in stage 1.

q_{c2} = Flow rate of the calibration gas to be diluted in stage 2.

q_d = Diluent gas flow rate.

q_{d1} = Flow rate of diluent gas in stage 1.

q_{d2} = Flow rate of diluent gas in stage 2.

s = Theoretical concentration (ppm) of spiked target compound in the bag.

S = Theoretical mass of compound spiked onto adsorbent in spiked train (µg).

t = Measured average concentration (ppm) of target compound and source sample (analysis results subsequent to bag spiking)

T_i = Sample loop temperature at the time of sample analysis, °K.

T_m = Absolute temperature of dry gas meter, °K.

T_s = Absolute temperature of syringe before injection, °K.

u = Source sample average concentration (ppm) of target compound in the bag (analysis results before bag spiking).

V_m = Gas volume indicated by dry gas meter, liters.

v_s = volume of stack gas sampled with spiked train (L).

v_u = volume of stack gas sampled with unspiked train (L).

X = Mole or volume fraction of the organic in the calibration gas to be diluted.

Y = Dry gas meter calibration factor, dimensionless.

µl = Liquid organic density as determined, g/ml.

24.055 = Ideal gas molar volume at 293 °K and 760 mm Hg, liters/g-mole.

1000 = Conversion factor, ml/liter.

10^6 = Conversion to ppm.

12.2 Calculate the concentration, C_s, in ppm using the following equation:

$$C_s = \frac{10^6\left(\overline{X} q_c\right)}{q_c + q_d} \qquad \text{Eq. 18-1}$$

12.3 Calculate the concentration, C_s, in ppm of the organic in the final gas mixture using the following equation:

$$C_s = 10^6 \overline{X}\left(\frac{q_{c1}}{q_{c1}+q_{d1}}\right)\left(\frac{q_{c2}}{q_{c2}+q_{d2}}\right) \qquad \text{Eq. 18-2}$$

12.4 Calculate each organic standard concentration, C_s, in ppm using the following equation:

$$C_s = \frac{G_v \times 10^6 \frac{293}{T_s}\frac{P_s}{760}}{V_m Y \frac{293}{T_m}\frac{P_m}{760}1000} \qquad \text{Eq. 18-3}$$

$$= \frac{G_v \times 10^3 \frac{P_s}{T_s}\frac{T_m}{P_m}}{V_m Y}$$

12.5 Calculate each organic standard concentration, C_s, in ppm using the following equation:

$$C_s = \frac{\frac{L_v}{M}\rho\left(24.055\times10^6\right)}{V_m Y \frac{293}{T_m}\frac{P_m}{760}1000} = 6.24\times10^4 \frac{L_v \rho T_m}{M V_m Y P_m} \qquad \text{Eq. 18-4}$$

12.6 Calculate the concentration, C_c, in ppm, dry basis, of each organic is the sample using the following equation:

$$C_c = \frac{C_s P_r T_i F_r}{P_i T_r\left(1-B_{ws}\right)} \qquad \text{Eq. 18-5}$$

12.7 Calculate the average fraction recovered (R) of each spiked target compound using the following equation:

$$R = \frac{t-u}{s} \qquad \text{Eq. 18-6}$$

12.8 Correct all field measurements with the calculated R value for that compound using the following equation:

$$\text{Reported Result} = \frac{\text{Measured Concentration (ppm)}}{R} \qquad \text{Eq. 18-7}$$

12.9 Determine the mass per volume of spiked compound measured using the following equation:

$$m_v = \frac{m_s}{V_s} - \frac{m_u}{V_u} \qquad \text{Eq. 18-8}$$

12.10 Calculate the fraction of spiked compound recovered, R, using the following equation:

$$R = \frac{m_v \times v_s}{S} \qquad \text{Eq. 18-9}$$

13.0 Method Performance

13.1 Since a potential sample may contain a variety of compounds from various sources, a specific precision limit for the analysis of field samples is impractical. Precision in the range of 5 to 10 percent relative standard deviation (RSD) is typical for gas chromatographic techniques, but an experienced GC operator with a reliable instrument can readily achieve 5 percent RSD. For this method, the following combined GC/operator values are required.

(a) Precision. Triplicate analyses of calibration standards fall within 5 percent of their mean value.

(b) Accuracy. Analysis results of prepared audit samples are within 10 percent of preparation values.

(c) Recovery. After developing an appropriate sampling and analytical system for the pollutants of interest, conduct the procedure in Section 8.4. Conduct the appropriate recovery study in Section 8.4 at each sampling point where the method is being applied. Submit the data and results of the recovery procedure with the reporting of results under Section 8.3.

14.0 Pollution Prevention. [Reserved]

15.0 Waste Management. [Reserved]

16.0 Alternative Procedures

16.1 Optional Presurvey and Presurvey Sampling.

Note: Presurvey screening is optional. Presurvey sampling should be conducted for sources where the target pollutants are not known from previous tests and/or process knowledge.

Perform a presurvey for each source to be tested. Refer to Figure 18–1. Some of the information can be collected from literature surveys and source personnel. Collect gas samples that can be analyzed to confirm the identities and approximate concentrations of the organic emissions.

16.1.1 Apparatus. This apparatus list also applies to Sections 8.2 and 11.

16.1.1.1 Teflon Tubing. (Mention of trade names or specific products does not constitute endorsement by the U.S. Environmental Protection Agency.) Diameter and length determined by connection requirements of cylinder regulators and the GC. Additional tubing is necessary to connect the GC sample loop to the sample.

16.1.1.2 Gas Chromatograph. GC with suitable detector, columns, temperature-controlled sample loop and valve assembly, and temperature programmable oven, if necessary. The GC shall achieve sensitivity requirements for the compounds under study.

16.1.1.3 Pump. Capable of pumping 100 ml/min. For flushing sample loop.

16.1.1.4 Flow Meter. To measure flow rates.

16.1.1.5 Regulators. Used on gas cylinders for GC and for cylinder standards.

16.1.1.6 Recorder. Recorder with linear strip chart is minimum acceptable. Integrator (optional) is recommended.

16.1.1.7 Syringes. 0.5-ml, 1.0- and 10-microliter size, calibrated, maximum accuracy (gas tight) for preparing calibration standards. Other appropriate sizes can be used.

16.1.1.8 Tubing Fittings. To plumb GC and gas cylinders.

16.1.1.9 Septa. For syringe injections.

16.1.1.10 Glass Jars. If necessary, clean, colored glass jars with Teflon-lined lids for condensate sample collection. Size depends on volume of condensate.

16.1.1.11 Soap Film Flowmeter. To determine flow rates.

16.1.1.12 Tedlar Bags. 10- and 50-liter capacity, for preparation of standards.

16.1.1.13 Dry Gas Meter with Temperature and Pressure Gauges. Accurate to ±2 percent, for preparation of gas standards.

16.1.1.14 Midget Impinger/Hot Plate Assembly. For preparation of gas standards.

16.1.1.15 Sample Flasks. For presurvey samples, must have gas-tight seals.

16.1.1.16 Adsorption Tubes. If necessary, blank tubes filled with necessary adsorbent (charcoal, Tenax, XAD–2, etc.) for presurvey samples.

16.1.1.17 Personnel Sampling Pump. Calibrated, for collecting adsorbent tube presurvey samples.

16.1.1.18 Dilution System. Calibrated, the dilution system is to be constructed following the specifications of an acceptable method.

16.1.1.19 Sample Probes. Pyrex or stainless steel, of sufficient length to reach centroid of stack, or a point no closer to the walls than 1 m.

16.1.1.20 Barometer. To measure barometric pressure.

16.1.2 Reagents.

16.1.2.1 Water. Deionized distilled.

16.1.2.2 Methylene chloride.

16.1.2.3 Calibration Gases. A series of standards prepared for every compound of interest.

16.1.2.4 Organic Compound Solutions. Pure (99.9 percent), or as pure as can reasonably be obtained, liquid samples of all the organic compounds needed to prepare calibration standards.

16.1.2.5 Extraction Solvents. For extraction of adsorbent tube samples in preparation for analysis.

16.1.2.6 Fuel. As recommended by the manufacturer for operation of the GC.

16.1.2.7 Carrier Gas. Hydrocarbon free, as recommended by the manufacturer for operation of the detector and compatibility with the column.

16.1.2.8 Zero Gas. Hydrocarbon free air or nitrogen, to be used for dilutions, blank preparation, and standard preparation.

16.1.3 Sampling.

16.1.3.1 Collection of Samples with Glass Sampling Flasks. Presurvey samples may be collected in precleaned 250-ml double-ended glass sampling flasks. Teflon stopcocks, without grease, are preferred. Flasks should be cleaned as follows: Remove the stopcocks from both ends of the flasks, and wipe the parts to remove any grease. Clean the stopcocks, barrels, and receivers with methylene chloride (or other non-target pollutant solvent, or heat and humidified air). Clean all glass ports with a soap solution, then rinse with tap and deionized distilled water. Place the flask in a cool glass annealing furnace, and apply heat up to 500 °C. Maintain at this temperature for 1 hour. After this time period, shut off and open the furnace to allow the flask to cool. Return the stopcocks to the flask receivers. Purge the assembly with high-purity nitrogen for 2 to 5 minutes. Close off the stopcocks after purging to maintain a slight positive nitrogen pressure. Secure the stopcocks with tape. Presurvey samples can be obtained either by drawing the gases into the previously evacuated flask or by drawing the gases into and purging the flask with a rubber suction bulb.

16.1.3.1.1 Evacuated Flask Procedure. Use a high-vacuum pump to evacuate the flask to the capacity of the pump; then close off the stopcock leading to the pump. Attach a 6-mm outside diameter (OD) glass tee to the flask inlet with a short piece of Teflon tubing. Select a 6-mm OD borosilicate sampling probe, enlarged at one end to a 12-mm OD and of sufficient length to reach the centroid of the duct to be sampled. Insert a glass wool plug in the enlarged end of the probe to remove particulate matter. Attach the other end of the probe to the tee with a short piece of Teflon tubing. Connect a rubber suction bulb to the third leg of the tee. Place the filter end of the probe at the centroid of the duct, and purge the probe with the rubber suction bulb. After the probe is completely purged and filled with duct gases, open the stopcock to the grab flask until the pressure in the flask reaches duct pressure. Close off the stopcock, and remove the probe from the duct. Remove the tee from the flask and tape the stopcocks to prevent leaks during shipment. Measure and record the duct temperature and pressure.

16.1.3.1.2 Purged Flask Procedure. Attach one end of the sampling flask to a rubber suction bulb. Attach the other end to a 6-mm OD glass probe as described in Section 8.3.3.1.1. Place the filter end of the probe at the centroid of the duct, or at a point no closer to the walls than 1 m, and apply suction with the bulb to completely purge the probe and flask. After the flask has been purged, close off the stopcock near the suction bulb, and then close off the stopcock near the probe. Remove the probe from the duct, and disconnect both the probe and suction bulb. Tape the stopcocks to prevent leakage during shipment. Measure and record the duct temperature and pressure.

16.1.3.2 Flexible Bag Procedure. Tedlar or aluminized Mylar bags can also be used to obtain the presurvey sample. Use new bags, and leak-check them before field use. In addition, check the bag before use for contamination by filling it with nitrogen or air, and analyzing the gas by GC at high sensitivity. Experience indicates that it is desirable to allow the inert gas to remain in the bag about 24 hours or

longer to check for desorption of organics from the bag. Follow the leak-check and sample collection procedures given in Section 8.2.1.

16.1.3.3 Determination of Moisture Content. For combustion or water-controlled processes, obtain the moisture content from plant personnel or by measurement during the presurvey. If the source is below 59°C, measure the wet bulb and dry bulb temperatures, and calculate the moisture content using a psychrometric chart. At higher temperatures, use Method 4 to determine the moisture content.

16.1.4 Determination of Static Pressure. Obtain the static pressure from the plant personnel or measurement. If a type S pitot tube and an inclined manometer are used, take care to align the pitot tube 90° from the direction of the flow. Disconnect one of the tubes to the manometer, and read the static pressure; note whether the reading is positive or negative.

16.1.5 Collection of Presurvey Samples with Adsorption Tube. Follow Section 8.2.4 for presurvey sampling.

17.0 References

1. American Society for Testing and Materials. C1 Through C5 Hydrocarbons in the Atmosphere by Gas Chromatography. ASTM D 2820–72, Part 23. Philadelphia, Pa. 23:950–958. 1973.

2. Corazon, V.V. Methodology for Collecting and Analyzing Organic Air Pollutants. U.S. Environmental Protection Agency. Research Triangle Park, N.C. Publication No. EPA–600/2–79–042. February 1979.

3. Dravnieks, A., B.K. Krotoszynski, J. Whitfield, A. O'Donnell, and T. Burgwald. Environmental Science and Technology. 5(12):1200–1222. 1971.

4. Eggertsen, F.T., and F.M. Nelsen. Gas Chromatographic Analysis of Engine Exhaust and Atmosphere. Analytical Chemistry. 30(6): 1040–1043. 1958.

5. Feairheller, W.R., P.J. Marn, D.H. Harris, and D.L. Harris. Technical Manual for Process Sampling Strategies for Organic Materials. U.S. Environmental Protection Agency. Research Triangle Park, N.C. Publication No. EPA 600/2–76–122. April 1976. 172 p.

6. **Federal Register**, 39 FR 9319–9323. 1974.

7. **Federal Register**, 39 FR 32857–32860. 1974.

8. **Federal Register**, 23069–23072 and 23076–23090. 1976.

9. **Federal Register**, 46569–46571. 1976.

10. **Federal Register**, 41771–41776. 1977.

11. Fishbein, L. Chromatography of Environmental Hazards, Volume II. Elesevier Scientific Publishing Company. New York, N.Y. 1973.

12. Hamersma, J.W., S.L. Reynolds, and R.F. Maddalone. EPA/IERL-RTP Procedures Manual: Level 1 Environmental Assessment. U.S. Environmental Protection Agency. Research Triangle Park, N.C. Publication No. EPA 600/276–160a. June 1976. 130 p.

13. Harris, J.C., M.J. Hayes, P.L. Levins, and D.B. Lindsay. EPA/IERL-RTP Procedures for Level 2 Sampling and Analysis of Organic Materials. U.S. Environmental Protection Agency. Research Triangle Park, N.C. Publication No. EPA 600/7–79–033. February 1979. 154 p.

14. Harris, W.E., H.W. Habgood. Programmed Temperature Gas Chromatography. John Wiley and Sons, Inc. New York. 1966.

15. Intersociety Committee. Methods of Air Sampling and Analysis. American Health Association. Washington, D.C. 1972.

16. Jones, P.W., R.D. Grammer, P.E. Strup, and T.B. Stanford. Environmental Science and Technology. 10:806–810. 1976.

17. McNair Han Bunelli, E.J. Basic Gas Chromatography. Consolidated Printers. Berkeley. 1969.

18. Nelson, G.O. Controlled Test Atmospheres, Principles and Techniques. Ann Arbor. Ann Arbor Science Publishers. 1971. 247 p.

19. NIOSH Manual of Analytical Methods, Volumes 1, 2, 3, 4, 5, 6, 7. U.S. Department of Health and Human Services, National Institute for Occupational Safety and Health. Center for Disease Control. 4676 Columbia Parkway, Cincinnati, Ohio 45226. April 1977—August 1981. May be available from the Superintendent of Documents, Government Printing Office, Washington, D.C. 20402. Stock Number/Price:

Volume 1—O17–033–00267–3/$13
Volume 2—O17–033–00260–6/$11
Volume 3—O17–033–00261–4/$14
Volume 4—O17–033–00317–3/$7.25
Volume 5—O17–033–00349–1/$10
Volume 6—O17–033–00369–6/$9
Volume 7—O17–033–00396–5/$7

Prices subject to change. Foreign orders add 25 percent.

20. Schuetzle, D., T.J. Prater, and S.R. Ruddell. Sampling and Analysis of Emissions from Stationary Sources; I. Odor and Total Hydrocarbons. Journal of the Air Pollution Control Association. 25(9): 925–932. 1975.

21. Snyder, A.D., F.N. Hodgson, M.A. Kemmer and J.R. McKendree. Utility of Solid Sorbents for Sampling Organic Emissions from Stationary Sources. U.S. Environmental Protection Agency. Research Triangle Park, N.C. Publication No. EPA 600/2–76–201. July 1976. 71 p.

22. Tentative Method for Continuous Analysis of Total Hydrocarbons in the Atmosphere. Intersociety Committee, American Public Health Association. Washington, D.C. 1972. p. 184–186.

23. Zwerg, G. CRC Handbook of Chromatography, Volumes I and II. Sherma, Joseph (ed.). CRC Press. Cleveland. 1972.

18.0 Tables, Diagrams, Flowcharts, and Validation Data

I. Name of company
Date
Address

Contracts
Phone
Process to be sampled

Duct or vent to be sampled

II. Process description

Raw material

Products

Operating cycle
Check: Batch Continuous Cyclic
Timing of batch or cycle

Best time to test

III. Sampling site
A. Description
Site decription
Duct shape and size
Material
Wall thickness inches
Upstream distance inches diameter
Downstream distance inches diameter
Size of port
Size of access area
Hazards Ambient temp. °F

B. Properties of gas stream
Temperature °C °F, Data source
Velocity , Data source
Static pressure inches H_2O, Data source
Moisture content %, Data source
Particulate content , Data source

Gaseous components
N_2 % Hydrocarbons ppm
O_2 %
CO %
CO_2 %
SO_2 %

Hydrocarbon components
ppm
ppm
ppm
ppm
ppm
ppm

C. Sampling considerations
Location to set up GC

Special hazards to be considered

Power available at duct
Power available for GC
Plant safety requirements

Vehicle traffic rules

Plant entry requirements

Security agreements

Potential problems

D. Site diagrams. (Attach additional sheets if required).

Figure 18–1. Preliminary Survey Data Sheet

Components to be analyzed and Expected concentration

Suggested chromatographic column

Column flow rate ml/min
Head pressure mm Hg
Column temperature: Isothermal °C, Programmed from °C to °C at °C/min
Injection port/sample loop temperature °C
Detector temperature °C
Detector flow rates: Hydrogen ml/min., head pressure mm Hg, Air/Oxygen ml/min., head pressure mm Hg.
Chart speed inches/minute

Compound data:
Compound and Retention time and Attenuation

Figure 18–2. Chromatographic Conditions Data Sheet

FIGURE 18–3. PREPARATION OF STANDARDS IN TEDLAR BAGS AND CALIBRATION CURVE

	Standards		
	Mixture #1	Mixture #2	Mixture #3
Standards Preparation Data:			
Organic:			
Bag number or identification			
Dry gas meter calibration factor			
Final meter reading (liters)			
Initial meter reading (liters)			
Metered volume (liters)			
Average meter temperature (°K)			
Average meter pressure, gauge (mm Hg)			
Average atmospheric perssure (mm Hg)			
Average meter pressure, absolute (mm Hg)			
Syringe temperature (°K) (see Section 10.1.2.1)			
Syringe pressure, absolute (mm Hg) (see Section 10.1.2.1)			
Volume of gas in syringe (ml) (Section 10.1.2.1)			
Density of liquid organic (g/ml) (Section 10.1.2.1)			
Volume of liquid in syringe (ml) (Section 10.1.2.1)			
GC Operating Conditions:			
Sample loop volume (ml)			
Sample loop temperature (°C)			
Carrier gas flow rate (ml/min)			
Column temperature:			
Initial (°C)			
Rate change (°C/min)			
Final (°C)			
Organic Peak Identification and Calculated Concentrations:			
Injection time (24 hour clock)			
Distance to peak (cm)			
Chart speed (cm/min)			
Organic retention time (min)			
Attenuation factor			
Peak height (mm)			
Peak area (mm_2)			
Peak area * attenuation factor (mm_2)			
Calculated concentration (ppm) (Equation 18–3 or 18–4)			

Plot peak area * attenuation factor against calculated concentration to obtain calibration curve.

Flowmeter number or identification
Flowmeter Type
Method: Bubble meter Spirometer Wet test meter
Readings at laboratory conditions:
Laboratory temperature (T_{lab}) °K
Laboratory barometric pressure (P_{lab}) mm Hg
Flow data:

FLOWMETER

Reading (as marked)	Temp. (°K)	Pressure (absolute)

CALIBRATION DEVICE

Time (min)	Gas volume [a]	Flow rate [b]

[a] Vol. of gas may be measured in milliliters, liters or cubic feet.

[b] Convert to standard conditions (20 °C and 760 mm Hg). Plot flowmeter reading against flow rate (standard conditions), and draw a smooth curve. If the flowmeter being calibrated is a rotameter or other flow device that is viscosity dependent, it may be necessary to generate a ''family'' of calibration curves that cover the operating pressure and temperature ranges of the flowmeter. While the following technique should be verified before application, it may be possible to calculate flow rate reading for rotameters at standard conditions Q_{std} as follows:

$$Q_{std} = Q_{lab}\left(\frac{760 \times T_{lab}}{P_{lab} \times 293}\right)^{1/2}$$

Flow rate (laboratory conditions)	Flow rate (STD conditions)

Figure 18–4. Flowmeter Calibration

BILLING CODE 6560–50–P

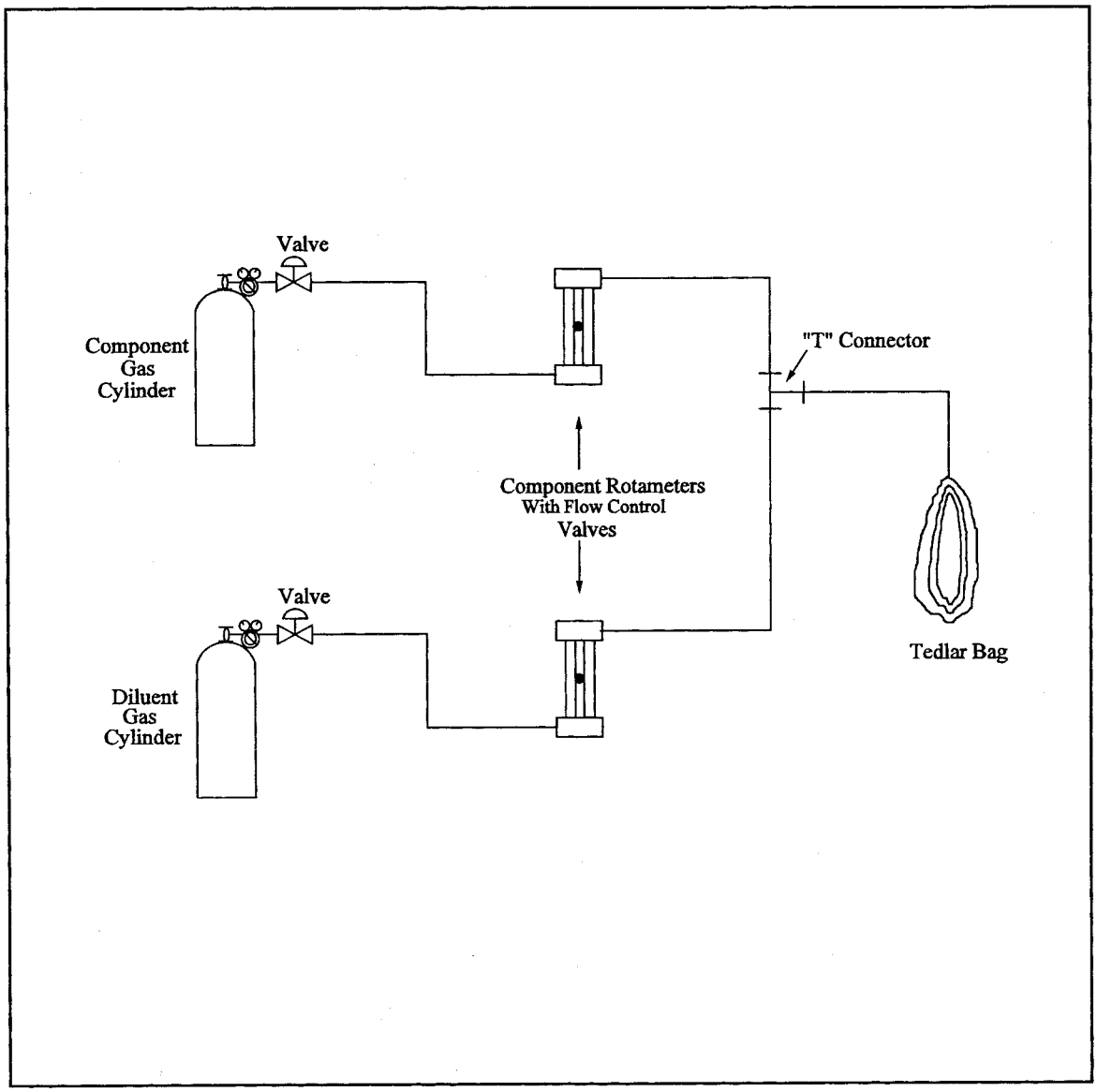

Figure 18-5. Single-Stage Calibration Gas Dilution System.

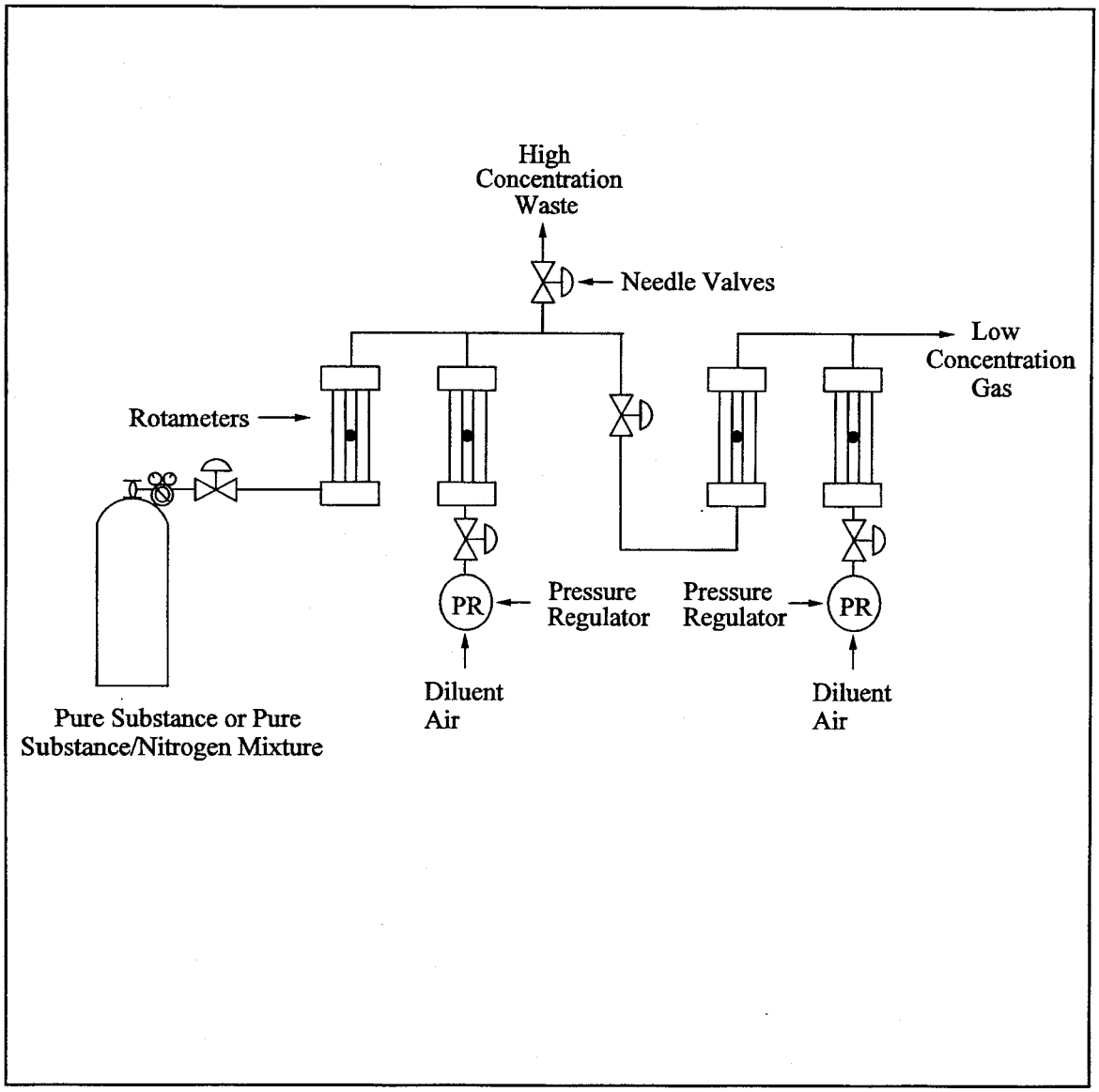

Figure 18-6. Two-Stage Dilution Apparatus.

BILLING CODE 6560–50–C

PREPARATION OF STANDARDS BY DILUTION OF CYLINDER STANDARD

[Cylinder Standard: Organic ——— Certified Concentration ——— ppm]

Standards preparation data:	Date:		
	Mixture 1	Mixture 2	Mixture 3
Stage 1:			
Standard gas flowmeter reading.			
Diluent gas flowmeter reading			
Laboratory temperature (°K)			
Barometric pressure (mm Hg)			
Flowmeter gage pressure (mm Hg)			
Flow rate cylinder gas at standard conditions (ml/min)			
Flow rate diluent gas at standard conditions (ml/min)			
Calculated concentration (ppm)			
Stage 2 (if used):			
Standard gas flowmeter reading			
Diluent gas flowmeter reading			
Flow rate Stage 1 gas at standard conditions (ml/min)			
Flow rate diluent gas at standard conditions			

PREPARATION OF STANDARDS BY DILUTION OF CYLINDER STANDARD—Continued

[Cylinder Standard: Organic ———— Certified Concentration ———— ppm]

Standards preparation data:	Date:		
	Mixture 1	Mixture 2	Mixture 3
Calculated concentration (ppm)			
GC Operating Conditions:			
Sample loop volume (ml)			
Sample loop temperature (°C)			
Carrier gas flow rate (ml/min)			
Column temperature:			
Initial (°C)			
Program rate (°C/min)			
Final (°C)			
Organic Peak Identification and Calculated Concentrations:			
Injection time (24-hour clock)			
Distance to peak (cm)			
Chart speed (cm/min)			
Retention time (min)			
Attenuation factor			
Peak area (mm^2)			
Peak area *attenuation factor			

Plot peak area *attenuation factor against calculated concentration to obtain calibration curve.

Figure 18–7. Standards Prepared by Dilution of Cylinder Standard

BILLING CODE 6560–50–P

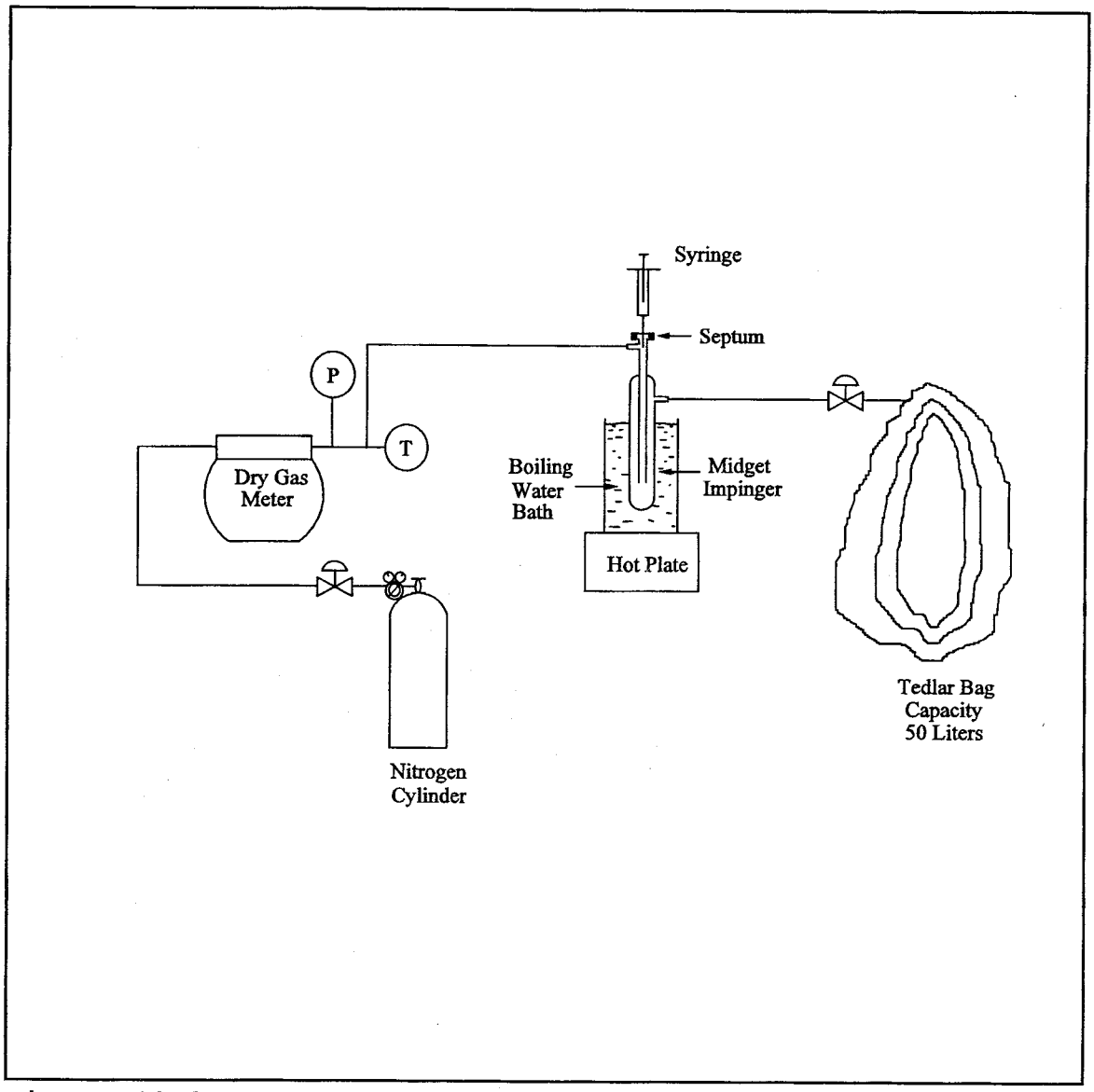

Figure 18-8. Apparatus for Preparation of Liquid Materials.

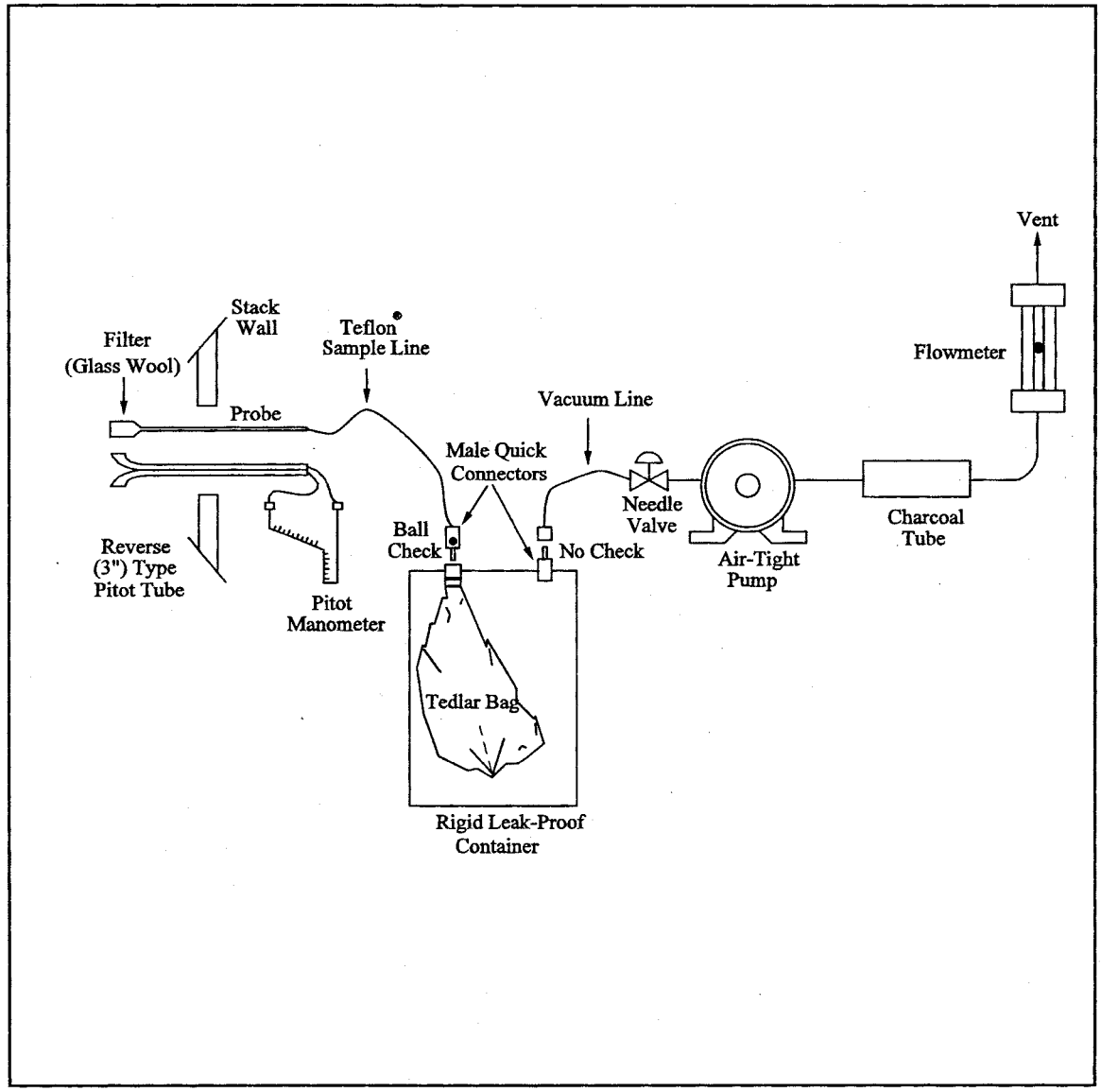

Figure 18-9. Integrated Bag Sampling Train.

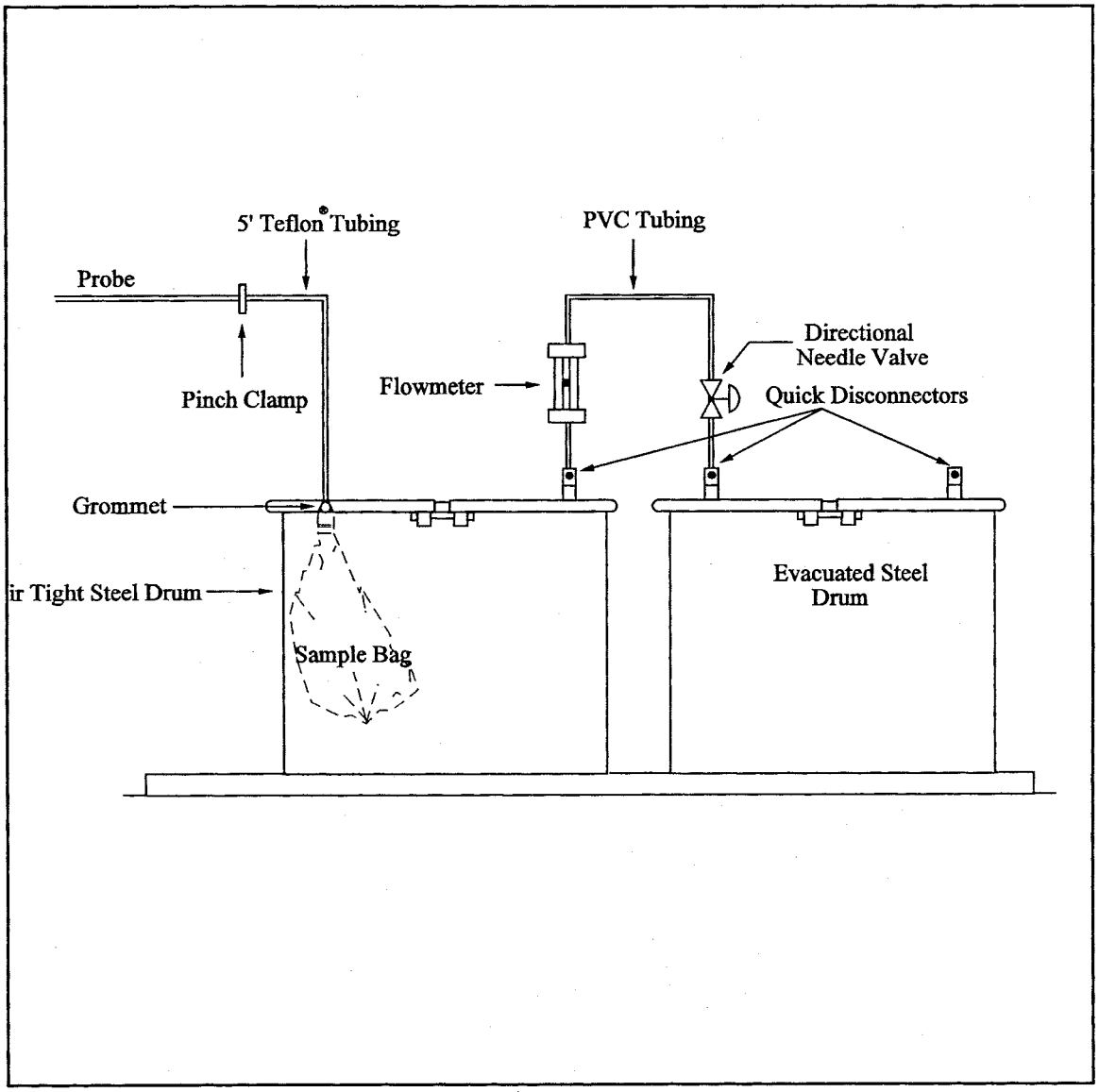

Figure 18-9a. Explosion Risk Gas Sampling Method.

BILLING CODE 6560–50–C

PLANT DATE SITE

	Sample 1	Sample 2	Sample 3
Source temperature (°C)			
Barometric pressure (mm Hg)			
Ambient temperature (°C)			
Sample flow rate (appr.)			
Bag number			
Start time			
Finish time			

Figure 18–10. Field Sample Data Sheet—Tedlar Bag Collection Method

PLANT DATE LOCATION

1. General information:
   Source temperature (°C) .....
   Probe temperature (°C) .....
   Ambient temperature (°C) .....
   Atmospheric pressure (mm) .....

PLANT ———— DATE ———— LOCATION ————Continued

Source pressure (″Hg) ....
Absolute source pressure (mm) ....
Sampling rate (liter/min) ....
Sample loop volume (ml) ....
Sample loop temperature (°C) ....
Columnar temperature:
Initial (°C) time (min) ....
Program rate (°C/min) ....
Final (°C)/time (min) ....
Carrier gas flow rate (ml/min) ....
Detector temperature (°C) ....
Injection time (24-hour basis) ....
Chart Speed (mm/min) ....
Dilution gas flow rate (ml/min) ....
Dilution gas used (symbol) ....
Dilution ratio ....

2. FIELD ANALYSIS DATA—CALIBRATION GAS

2. [Run No. Time]

Components	Area	Attenuation	A x A Factor	Conc. (ppm)

Figure 18–11. Field Analysis Data Sheets

BILLING CODE 6560-50-P

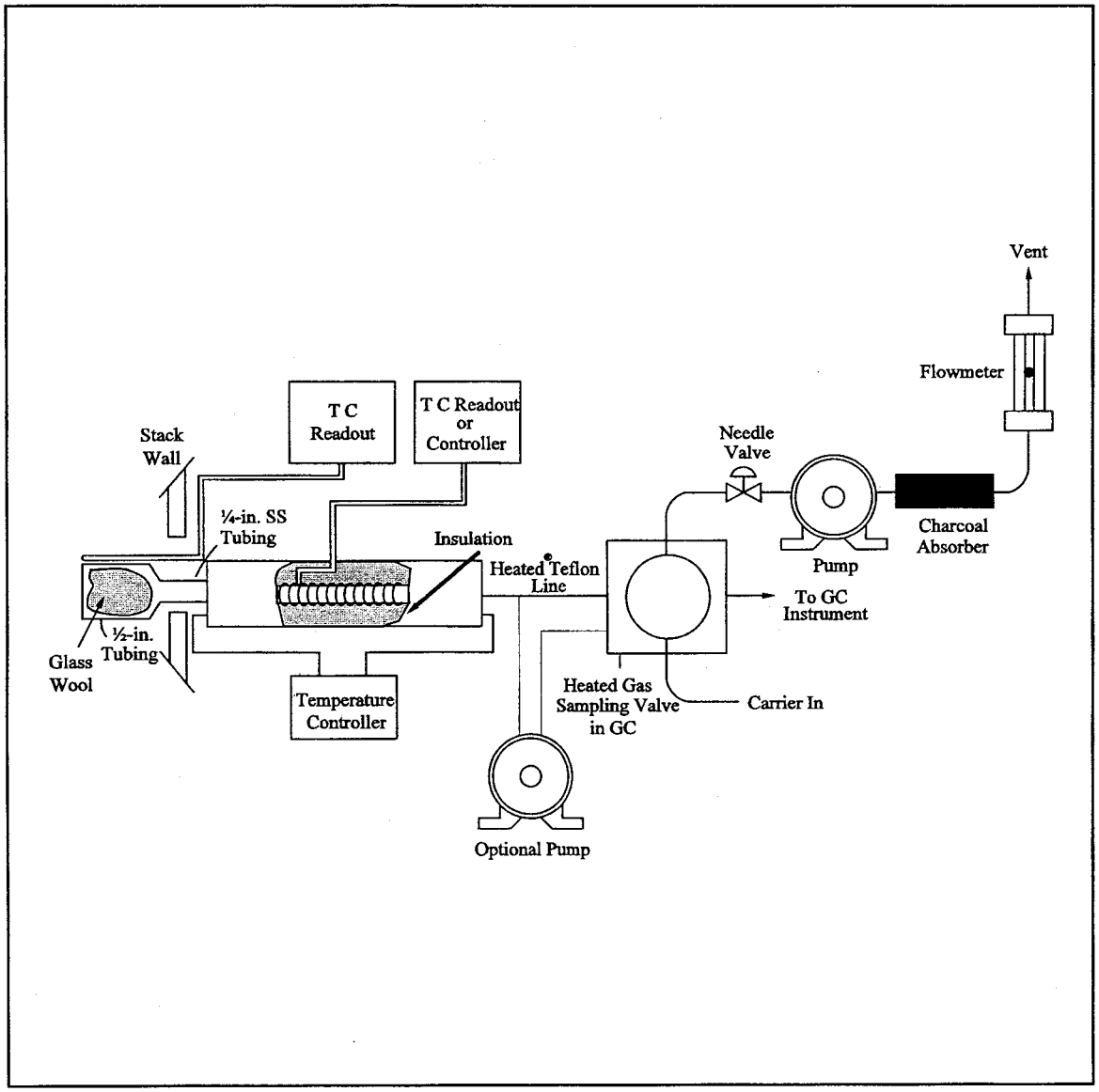

Figure 18-12. Direct Interface Sampling System.

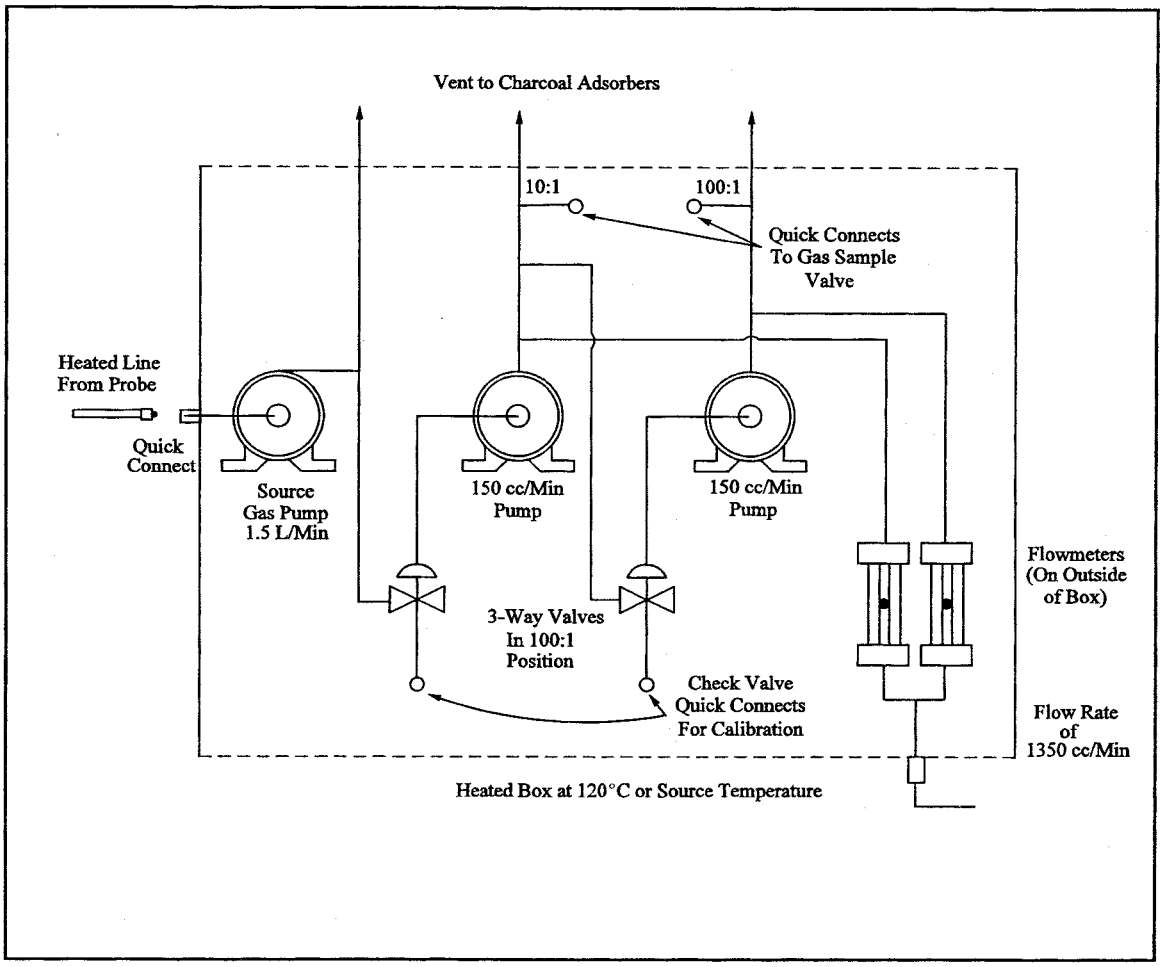

Figure 18-13. Schematic Diagram of the Heated Box Required for Dilution of Sample Gas.

BILLING CODE 6560-50-C

GASEOUS ORGANIC SAMPLING AND ANALYSIS CHECK LIST

[Respond with initials or number as appropriate]

1. Presurvey data:
   - A. Grab sample collected ..... ☐
     - B. Grab sample analyzed for composition ..... ☐
     - Method GC ..... ☐
       - GC/MS ..... ☐
       - Other ..... ☐
   - C. GC–FID analysis performed ..... ☐
2. Laboratory calibration data:
   - A. Calibration curves prepared ..... ☐
     - Number of components ..... ☐
     - Number of concentrations/component (3 required) ..... ☐
   - B. Audit samples (optional):
   - Analysis completed ..... ☐
   - Verified for concentration ..... ☐
   - OK obtained for field work ..... ☐
3. Sampling procedures:
   - A. Method:
     - Bag sample ..... ☐
     - Direct interface ..... ☐
     - Dilution interface ..... ☐
   - B. Number of samples collected ..... ☐
4. Field Analysis:
   - A. Total hydrocarbon analysis performed ..... ☐

GASEOUS ORGANIC SAMPLING AND ANALYSIS CHECK LIST—Continued

[Respond with initials or number as appropriate]

B. Calibration curve prepared ..... ☐
Number of components ..... ☐
Number of concentrations per component (3 required) ..... ☐

Gaseous Organic Sampling and Analysis Data

Plant
Date
Location

Source sample 1	Source sample 2	Source sample 3
1. General information:		
Source temperature (°C)		
Probe temperature (°C)		
Ambient temperature (°C)		
Atmospheric pressure (mm Hg)		
Source pressure (mm Hg)		
Sampling rate (ml/min)		
Sample loop volume (ml)		
Sample loop temperature (°C)		
Sample collection time (24-hr basis)		
Column temperature:		
Initial (°C)		
Program rate (°C/min)		
Final (°C)		
Carrier gas flow rate (ml/min)		
Detector temperature (°C)		
Chart speed (cm/min)		
Dilution gas flow rate (ml/min)		
Diluent gas used (symbol)		
Dilution ratio		
Performed by: (signature): Date:		

Figure 18–14. Sampling and Analysis Sheet

Method 19—Determination of Sulfur Dioxide Removal Efficiency and Particulate Matter, Sulfur Dioxide, and Nitrogen Oxide Emission Rates

1.0 Scope and Application

1.1 Analytes. This method provides data reduction procedures relating to the following pollutants, but does not include any sample collection or analysis procedures.

Analyte	CAS No.	Sensitivity
Nitrogen oxides (NO_X), including:		
Nitric oxide (NO)	10102–43–9	N/A
Nitrogen dioxide (NO_2)	10102–44–0.	
Particulate matter (PM)	None assigned	N/A
Sulfur dioxide (SO_2)	7499–09–05	N/A

1.2 Applicability. Where specified by an applicable subpart of the regulations, this method is applicable for the determination of (a) PM, SO_2, and NO_X emission rates; (b) sulfur removal efficiencies of fuel pretreatment and SO_2 control devices; and (c) overall reduction of potential SO_2 emissions.

2.0 Summary of Method

2.1 Emission Rates. Oxygen (O_2) or carbon dioxide (CO_2) concentrations and appropriate F factors (ratios of combustion gas volumes to heat inputs) are used to calculate pollutant emission rates from pollutant concentrations.

2.2 Sulfur Reduction Efficiency and SO_2 Removal Efficiency. An overall SO_2 emission reduction efficiency is computed from the efficiency of fuel pretreatment systems, where applicable, and the efficiency of SO_2 control devices.

2.2.1 The sulfur removal efficiency of a fuel pretreatment system is determined by fuel sampling and analysis of the sulfur and heat contents of the fuel before and after the pretreatment system.

2.2.2 The SO_2 removal efficiency of a control device is determined by measuring the SO_2 rates before and after the control device.

2.2.2.1 The inlet rates to SO_2 control systems (or, when SO_2 control systems are not used, SO_2 emission rates to the atmosphere) are determined by fuel sampling and analysis.

3.0 Definitions [Reserved]

4.0 Interferences [Reserved]

5.0 Safety [Reserved]

6.0 Equipment and Supplies [Reserved]

7.0 Reagents and Standards [Reserved]

8.0 Sample Collection, Preservation, Storage, and Transport [Reserved]

9.0 Quality Control [Reserved]

10.0 Calibration and Standardization [Reserved]

11.0 Analytical Procedures [Reserved]

12.0 Data Analysis and Calculations

12.1 Nomenclature

B_{wa} = Moisture fraction of ambient air, percent.

B_{ws} = Moisture fraction of effluent gas, percent.

%C = Concentration of carbon from an ultimate analysis of fuel, weight percent.

C_d = Pollutant concentration, dry basis, ng/scm (lb/scf)

$\%CO_{2d}$,$\%CO_{2w}$ = Concentration of carbon dioxide on a dry and wet basis, respectively, percent.

C_w = Pollutant concentration, wet basis, ng/scm (lb/scf).

D = Number of sampling periods during the performance test period.

E = Pollutant emission rate, ng/J (lb/million Btu).

E_a = Average pollutant rate for the specified performance test period, ng/J (lb/million Btu).

E_{ao}, E_{ai} = Average pollutant rate of the control device, outlet and inlet, respectively, for the performance test period, ng/J (lb/million Btu).

E_{bi} = Pollutant rate from the steam generating unit, ng/J (lb/million Btu)

E_{bo} = Pollutant emission rate from the steam generating unit, ng/J (lb/million Btu).

E_{ci} = Pollutant rate in combined effluent, ng/J (lb/million Btu).

E_{co} = Pollutant emission rate in combined effluent, ng/J (lb/million Btu).

E_d = Average pollutant rate for each sampling period (*e.g.,* 24-hr Method 6B sample or 24-hr fuel sample) or for each fuel lot (*e.g.,* amount of fuel bunkered), ng/J (lb/million Btu).

E_{di} = Average inlet SO_2 rate for each sampling period d, ng/J (lb/million Btu)

E_g = Pollutant rate from gas turbine, ng/J (lb/million Btu).

E_{ga} = Daily geometric average pollutant rate, ng/J (lbs/million Btu) or ppm corrected to 7 percent O_2.

E_{jo},E_{ji} = Matched pair hourly arithmetic average pollutant rate, outlet and inlet, respectively, ng/J (lb/million Btu) or ppm corrected to 7 percent O_2.

E_h = Hourly average pollutant, ng/J (lb/million Btu).

E_{hj} = Hourly arithmetic average pollutant rate for hour ''j,'' ng/J (lb/million Btu) or ppm corrected to 7 percent O_2.

EXP = Natural logarithmic base (2.718) raised to the value enclosed by brackets.

F_d, F_w, F_c = Volumes of combustion components per unit of heat content, scm/J (scf/million Btu).

GCV = Gross calorific value of the fuel consistent with the ultimate analysis, kJ/kg (Btu/lb).

GCV_p, GCV_r = Gross calorific value for the product and raw fuel lots, respectively, dry basis, kJ/kg (Btu/lb).

%H = Concentration of hydrogen from an ultimate analysis of fuel, weight percent.

H = Total number of operating hours for which pollutant rates are determined in the performance test period.

H_b = Heat input rate to the steam generating unit from fuels fired in the steam generating unit, J/hr (million Btu/hr).

H_g = Heat input rate to gas turbine from all fuels fired in the gas turbine, J/hr (million Btu/hr).

$\%H_2O$ = Concentration of water from an ultimate analysis of fuel, weight percent.

H_r = Total numbers of hours in the performance test period (*e.g.*, 720 hours for 30-day performance test period).

K = Conversion factor, 10^{-5} (kJ/J)/(%) [10^6 Btu/million Btu].

K_c = (9.57 scm/kg)/% [(1.53 scf/lb)/%].

K_{cc} = (2.0 scm/kg)/% [(0.321 scf/lb)/%].

K_{hd} = (22.7 scm/kg)/% [(3.64 scf/lb)/%].

K_{hw} = (34.74 scm/kg)/% [(5.57 scf/lb)/%].

K_n = (0.86 scm/kg)/% [(0.14 scf/lb)/%].

K_o = (2.85 scm/kg)/% [(0.46 scf/lb)/%].

K_s = (3.54 scm/kg)/% [(0.57 scf/lb)/%].

K_w = (1.30 scm/kg)/% [(0.21 scf/lb)/%].

ln = Natural log of indicated value.

L_p,L_r = Weight of the product and raw fuel lots, respectively, metric ton (ton).

%N = Concentration of nitrogen from an ultimate analysis of fuel, weight percent.

N = Number of fuel lots during the averaging period.

n = Number of fuels being burned in combination.

n_d = Number of operating hours of the affected facility within the performance test period for each E_d determined.

n_t = Total number of hourly averages for which paired inlet and outlet pollutant rates are available within the 24-hr midnight to midnight daily period.

%O = Concentration of oxygen from an ultimate analysis of fuel, weight percent.

$\%O_{2d}$, $\%O_{2w}$ = Concentration of oxygen on a dry and wet basis, respectively, percent.

P_s = Potential SO_2 emissions, percent.

$\%R_f$ = SO_2 removal efficiency from fuel pretreatment, percent.

$\%R_g$ = SO_2 removal efficiency of the control device, percent.

$\%R_{ga}$ = Daily geometric average percent reduction.

$\%R_o$ = Overall SO_2 reduction, percent.

%S = Sulfur content of as-fired fuel lot, dry basis, weight percent.

S_e = Standard deviation of the hourly average pollutant rates for each performance test period, ng/J (lb/million Btu).

$\%S_f$ = Concentration of sulfur from an ultimate analysis of fuel, weight percent.

S_i = Standard deviation of the hourly average inlet pollutant rates for each performance test period, ng/J (lb/million Btu).

S_o = Standard deviation of the hourly average emission rates for each performance test period, ng/J (lb/million Btu).

$\%S_p$, $\%S_r$ = Sulfur content of the product and raw fuel lots respectively, dry basis, weight percent.

$t_{0.95}$ = Values shown in Table 19–3 for the indicated number of data points n.

X_k = Fraction of total heat input from each type of fuel k.

12.2 Emission Rates of PM, SO_2, and NO_x. Select from the following sections the applicable procedure to compute the PM, S_{O2}, or NO_x emission rate (E) in ng/J (lb/million Btu). The pollutant concentration must be in ng/scm (lb/scf) and the F factor must be in scm/J (scf/million Btu). If the pollutant concentration (C) is not in the appropriate units, use Table 19–1 in Section 17.0 to make the proper conversion. An F factor is the ratio of the gas volume of the products of combustion to the heat content of the fuel. The dry F factor (F_d) includes all components of combustion less water, the wet F factor (F_w) includes all components of combustion, and the carbon F factor (F_c) includes only carbon dioxide.

Note: Since F_w factors include water resulting only from the combustion of

hydrogen in the fuel, the procedures using F_w factors are not applicable for computing E from steam generating units with wet scrubbers or with other processes that add water (*e.g.,* steam injection).

12.2.1 Oxygen-Based F Factor, Dry Basis. When measurements are on a dry basis for both O ($\%O_{2d}$) and pollutant (C_d) concentrations, use the following equation:

$$E = C_d F_d \frac{20.9}{(20.9 - \%O_{2d})} \qquad \text{Eq. 19-1}$$

12.2.2 Oxygen-Based F Factor, Wet Basis. When measurements are on a wet basis for both O_2 ($\%O_{2w}$) and pollutant (C_w) concentrations, use either of the following:

12.2.2.1 If the moisture fraction of ambient air (B_{wa}) is measured:

$$E = C_w F_w \frac{20.9}{\left[20.9(1 - B_{wa}) - \%O_{2w}\right]} \qquad \text{Eq. 19-2}$$

Instead of actual measurement, B_{wa} may be estimated according to the procedure below.

NOTE: The estimates are selected to ensure that negative errors will not be larger than −1.5 percent. However, positive errors, or over-estimation of emissions by as much as 5 percent may be introduced depending upon the geographic location of the facility and the associated range of ambient moisture.

12.2.2.1.1 B_{wa} = 0.027. This value may be used at any location at all times.

12.2.2.1.2 B_{wa} = Highest monthly average of B_{wa} that occurred within the previous calendar year at the nearest Weather Service Station. This value shall be determined annually and may be used as an estimate for the entire current calendar year.

12.2.2.1.3 B_{wa} = Highest daily average of Bwa that occurred within a calendar month at the nearest Weather Service Station, calculated from the data from the past 3 years. This value shall be computed for each month and may be used as an estimate for the current respective calendar month.

12.2.2.2 If the moisture fraction (B_{ws}) of the effluent gas is measured:

$$E = C_w F_d \frac{20.9}{\left[20.9(1 - B_{ws}) - \%O_{2w}\right]} \qquad \text{Eq. 19-3}$$

12.2.3 Oxygen-Based F Factor, Dry/Wet Basis.

12.2.3.1 When the pollutant concentration is measured on a wet basis (C_w) and O_2 concentration is measured on a dry basis ($\%O_{2d}$), use the following equation:

$$E = \frac{(C_w F_d)(20.9)}{(1 - B_{ws})(20.9 - \%O_{2d})} \qquad \text{Eq. 19-4}$$

12.2.3.2 When the pollutant concentration is measured on a dry basis (C_d) and the O_2 concentration is measured on a wet basis ($\%O_{2w}$), use the following equation:

$$E = \frac{C_d F_d \frac{20.9}{(20.9 - \%O_{2w})}}{(1 - B_{ws})} \qquad \text{Eq. 19-5}$$

12.2.4 Carbon Dioxide-Based F Factor, Dry Basis. When measurements are on a dry basis for both CO_2 ($\%CO_{2d}$) and pollutant (C_d) concentrations, use the following equation:

$$E = C_d F_c \frac{100}{\%CO_{2d}} \qquad \text{Eq. 19-6}$$

12.2.5 Carbon Dioxide-Based F Factor, Wet Basis. When measurements are on a wet basis for both CO_2 ($\%CO_{2w}$) and pollutant (C_w) concentrations, use the following equation:

$$E = C_w F_c \frac{100}{\%CO_{2w}} \qquad \text{Eq. 19-7}$$

12.2.6 Carbon Dioxide-Based F Factor, Dry/Wet Basis.

12.2.6.1 When the pollutant concentration is measured on a wet basis (C_w) and CO_2 concentration is measured on a dry basis ($\%CO_{2d}$), use the following equation:

$$E = \frac{C_w F_c}{(1 - B_{ws})} \frac{100}{\%CO_{2d}} \qquad \text{Eq. 19-8}$$

12.2.6.2 When the pollutant concentration is measured on a dry basis (C_d) and CO_2 concentration is measured on a wet basis ($\%CO_{2w}$), use the following equation:

$$E = C_d F_c (1 - B_{ws}) \frac{100}{\%CO_{2w}} \qquad \text{Eq. 19-9}$$

12.2.7 Direct-Fired Reheat Fuel Burning. The effect of direct-fired reheat fuel burning (for the purpose of raising the temperature of the exhaust effluent from wet scrubbers to above the moisture dew-point) on emission rates will be less than 1.0 percent and, therefore, may be ignored.

12.2.8 Combined Cycle-Gas Turbine Systems. For gas turbine-steam generator combined cycle systems, determine the emissions from the steam generating unit or the percent reduction in potential SO_2 emissions as follows:

12.2.8.1 Compute the emission rate from the steam generating unit using the following equation:

$$E_{bo} = E_{co} + \frac{H_g}{H_b}(E_{co} - E_g) \qquad \text{Eq. 19-10}$$

12.2.8.1.1 Use the test methods and procedures section of 40 CFR Part 60, Subpart GG to obtain E_{co} and E_g. Do not use F_w factors for determining E_g or E_{co}. If an SO_2 control device is used, measure E_{co} after the control device.

12.2.8.1.2 Suitable methods shall be used to determine the heat input rates to the steam generating units (H_b) and the gas turbine (H_g).

12.2.8.2 If a control device is used, compute the percent of potential SO_2 emissions (P_s) using the following equations:

$$E_{bi} = E_{ci} - \frac{H_g}{H_b}(E_{ci} - E_g) \qquad \text{Eq. 19-11}$$

$$P_s = 100\left(1 - \frac{E_{bo}}{E_{bi}}\right) \qquad \text{Eq. 19-12}$$

NOTE: Use the test methods and procedures section of Subpart GG to obtain E_{ci} and E_g. Do not use F_w factors for determining E_g or E_{ci}.

12.3 F Factors. Use an average F factor according to Section 12.3.1 or determine an applicable F factor according to Section 12.3.2. If combined fuels are fired, prorate the applicable F factors using the procedure in Section 12.3.3.

12.3.1 Average F Factors. Average F factors (F_d, F_w, or F_c) from Table 19–2 in Section 17.0 may be used.

12.3.2 Determined F Factors. If the fuel burned is not listed in Table 19–2 or if the owner or operator chooses to determine an F factor rather than use the values in Table 19–2, use the procedure below:

12.3.2.1 Equations. Use the equations below, as appropriate, to compute the F factors:

$$F_d = \frac{K\left(K_{hd}\%H + K_c\%C + K_s\%S + K_n\%N - K_o\%O\right)}{GCV} \qquad \text{Eq. 19-13}$$

$$F_w = \frac{K\left[K_{hw}\%H + K_c\%C + K_s\%S + K_n\%N - K_o\%O + K_w\%H_2O\right]}{GCV_w} \qquad \text{Eq. 19-14}$$

$$F_c = \frac{K\left(K_{cc}\%C\right)}{GCV} \qquad \text{Eq. 19-15}$$

Note: Omit the $\%H_2O$ term in the equations for F_w if %H and %O include the unavailable hydrogen and oxygen in the form of H_2O.)

12.3.2.2 Use applicable sampling procedures in Section 12.5.2.1 or 12.5.2.2 to obtain samples for analyses.

12.3.2.3 Use ASTM D 3176–74 or 89 (all cited ASTM standards are incorporated by reference—see § 60.17) for ultimate analysis of the fuel.

12.3.2.4 Use applicable methods in Section 12.5.2.1 or 12.5.2.2 to determine the heat content of solid or liquid fuels. For gaseous fuels, use ASTM D 1826–77 or 94 (incorporated by reference—see § 60.17) to determine the heat content.

12.3.3 F Factors for Combination of Fuels. If combinations of fuels are burned, use the following equations, as applicable unless otherwise specified in an applicable subpart:

$$F_d = \sum_{k=1}^{n}\left(X_k F_{dk}\right) \qquad \text{Eq. 19-16}$$

$$F_w = \sum_{k=1}^{n}\left(X_k F_{wk}\right) \qquad \text{Eq. 19-17}$$

$$F_c = \sum_{k=1}^{n}\left(X_k F_{ck}\right) \qquad \text{Eq. 19-18}$$

12.4 Determination of Average Pollutant Rates.

12.4.1 Average Pollutant Rates from Hourly Values. When hourly average pollutant rates (E_h), inlet or outlet, are obtained (*e.g.*, CEMS values), compute the average pollutant rate (E_a) for the performance test period (*e.g.*, 30 days) specified in the applicable regulation using the following equation:

$$E_a = \frac{1}{H}\sum_{j=1}^{n} E_{hj} \qquad \text{Eq. 19-19}$$

12.4.2 Average Pollutant Rates from Other than Hourly Averages. When pollutant rates are determined from measured values representing longer than 1-hour periods (*e.g.*, daily fuel sampling and analyses or Method 6B values), or when pollutant rates are determined from combinations of 1-hour and longer than 1-hour periods (*e.g.*, CEMS and Method 6B values), compute the average pollutant rate (E_a) for the performance test period (*e.g.*, 30 days) specified in the applicable regulation using the following equation:

$$E_a = \frac{\sum_{j=1}^{D}\left(n_d E_d\right)_j}{\sum_{j=1}^{D} n_{dj}} \qquad \text{Eq. 19-20}$$

12.4.3 Daily Geometric Average Pollutant Rates from Hourly Values. The geometric average pollutant rate (E_{ga}) is computed using the following equation:

$$E_{ga} = \exp\left[\frac{1}{n_t}\sum_{j=1}^{n_t}\left[\ln\left(E_{hj}\right)\right]\right] \qquad \text{Eq. 19-21}$$

12.5 Determination of Overall Reduction in Potential Sulfur Dioxide Emission.

12.5.1 Overall Percent Reduction. Compute the overall percent SO_2 reduction ($\%R_o$) using the following equation:

$$\%R_o = 100\left[1.0 - \left(1.0 - \frac{\%R_f}{100}\right)\left(1.0 - \frac{\%R_g}{100}\right)\right] \qquad \text{Eq. 19-22}$$

12.5.2 Pretreatment Removal Efficiency (Optional). Compute the SO_2 removal efficiency from fuel pretreatment ($\%R_f$) for the averaging period (*e.g.*, 90 days) as specified in the applicable regulation using the following equation:

$$\%R_f = 100\left[1.0 - \frac{\sum_{j=1}^{N}\left(\frac{\%S_{pj}}{GCV_{pj}}\right)L_{pj}}{\sum_{j=1}^{N}\left(\frac{\%S_{rj}}{GCV_{rj}}\right)L_{rj}}\right] \qquad \text{Eq. 19-23}$$

Note: In calculating $\%R_f$, include %S and GCV values for all fuel lots that are not pretreated and are used during the averaging period.

12.5.2.1 Solid Fossil (Including Waste) Fuel/Sampling and Analysis.

Note: For the purposes of this method, raw fuel (coal or oil) is the fuel delivered to the desulfurization (pretreatment) facility. For oil, the input oil to the oil desulfurization process (*e.g.*, hydrotreatment) is considered to be the raw fuel.

12.5.2.1.1 Sample Increment Collection. Use ASTM D 2234–76, 96, 97a, or 98 (incorporated by reference—see § 60.17), Type I, Conditions A, B, or C, and systematic spacing. As used in this method, systematic spacing is intended to include evenly spaced increments in time or increments based on equal weights of coal passing the collection area. As a minimum, determine the number and weight of increments required per gross sample representing each coal lot according to Table 2 or Paragraph 7.1.5.2 of ASTM D 2234. Collect one gross sample for each lot of raw coal and one gross sample for each lot of product coal.

12.5.2.1.2 ASTM Lot Size. For the purpose of Section 12.5.2 (fuel pretreatment), the lot size of product coal is the weight of product coal from one type of raw coal. The lot size of raw coal is the weight of raw coal used to produce one lot of product coal. Typically, the lot size is the weight of coal processed in a 1-day (24-hour) period. If more than one type of coal is treated and produced in 1 day, then gross samples must be collected and analyzed for each type of coal. A coal lot size equaling the 90-day quarterly fuel quantity for a steam generating unit may be used if representative sampling can be conducted for each raw coal and product coal.

Note: Alternative definitions of lot sizes may be used, subject to prior approval of the Administrator.

12.5.2.1.3 Gross Sample Analysis. Use ASTM D 2013–72 or 86 to prepare the sample, ASTM D 3177–75 or 89 or ASTM D 4239–85, 94, or 97 to determine sulfur content (%S), ASTM D 3173–73 or 87 to determine moisture content, and ASTM D 2015–77 (Reapproved 1978) or 96, D 3286–85 or 96, or D 5865–98 to determine gross calorific value (GCV) (all standards cited are incorporated by reference—see § 60.17 for acceptable versions of the standards) on a dry basis for each gross sample.

12.5.2.2 Liquid Fossil Fuel-Sampling and Analysis. See Note under Section 12.5.2.1.

12.5.2.2.1 Sample Collection. Follow the procedures for continuous sampling in ASTM D 270 or D 4177–95 (incorporated by reference—see § 60.17) for each gross sample from each fuel lot.

12.5.2.2.2 Lot Size. For the purpose of Section 12.5.2 (fuel pretreatment), the lot size of a product oil is the weight of product oil from one pretreatment facility and intended as one shipment (ship load, barge load, etc.). The lot size of raw oil is the weight of each crude liquid fuel type used to produce a lot of product oil.

Note: Alternative definitions of lot sizes may be used, subject to prior approval of the Administrator.

12.5.2.2.3 Sample Analysis. Use ASTM D 129–64, 78, or 95, ASTM D 1552–83 or 95, or ASTM D 4057–81 or 95 to determine the sulfur content (%S) and ASTM D 240–76 or 92 (all standards cited are incorporated by reference—see § 60.17) to determine the GCV of each gross sample. These values may be assumed to be on a dry basis. The owner or operator of an affected facility may elect to determine the GCV by sampling the oil combusted on the first steam generating unit operating day of each calendar month and then using the lowest GCV value of the three GCV values per quarter for the GCV of all oil combusted in that calendar quarter.

12.5.2.3 Use appropriate procedures, subject to the approval of the Administrator, to determine the fraction of total mass input derived from each type of fuel.

12.5.3 Control Device Removal Efficiency. Compute the percent removal efficiency ($\%R_g$) of the control device using the following equation:

$$\%R_g = 100\left(1.0 - \frac{E_{ao}}{E_{ai}}\right) \qquad \text{Eq. 19-24}$$

12.5.3.1 Use continuous emission monitoring systems or test methods, as appropriate, to determine the outlet SO_2 rates and, if appropriate, the inlet SO_2 rates. The rates may be determined as hourly (E_h) or other sampling period averages (E_d). Then, compute the average pollutant rates for the performance test period (E_{ao} and E_{ai}) using the procedures in Section 12.4.

12.5.3.2 As an alternative, as-fired fuel sampling and analysis may be used to determine inlet SO_2 rates as follows:

12.5.3.2.1 Compute the average inlet SO_2 rate (E_{di}) for each sampling period using the following equation:

$$E_{di} = K\frac{\%S}{GCV} \qquad \text{Eq. 19-25}$$

Where:

$$K = 2\times10^7\left(\frac{\text{ng } SO_2}{\%S}\right)\left(\frac{(\text{kJ})}{\text{J}}\right)\left(\frac{1}{\text{kg coal}}\right)\left[2\times10^4\left(\frac{\text{lb } SO_2}{\%S}\right)\left(\frac{\text{Btu}}{\text{million Btu}}\right)\left(\frac{1}{\text{lb coal}}\right)\right]$$

After calculating E_{di}, use the procedures in Section 12.4 to determine the average inlet SO_2 rate for the performance test period (E_{ai}).

12.5.3.2.2 Collect the fuel samples from a location in the fuel handling system that provides a sample representative of the fuel bunkered or consumed during a steam generating unit operating day. For the purpose of as-fired fuel sampling under Section 12.5.3.2 or Section 12.6, the lot size for coal is the weight of coal bunkered or consumed during each steam generating unit operating day. The lot size for oil is the weight of oil supplied to the ''day'' tank or consumed during each steam generating unit operating day. For reporting and calculation purposes, the gross sample shall be identified with the calendar day on which sampling began. For steam generating unit operating days when a coal-fired steam generating unit is operated without coal being added to the bunkers, the coal analysis from the previous ''as bunkered'' coal sample shall be used until coal is bunkered again. For steam generating unit operating days when an oil-fired steam generating unit is operated without oil being added to the oil ''day'' tank, the oil analysis from the previous day shall be used until the ''day'' tank is filled again. Alternative definitions of fuel lot size may be used, subject to prior approval of the Administrator.

12.5.3.2.3 Use ASTM procedures specified in Section 12.5.2.1 or 12.5.2.2 to determine %S and GCV.

12.5.4 Daily Geometric Average Percent Reduction from Hourly Values. The geometric average percent reduction ($\%R_{ga}$) is computed using the following equation:

$$\%R_{ga} = 100\left[1 - EXP\left(\frac{1}{n_t}\sum_{j=1}^{n_t} 1n\frac{E_{jo}}{E_{ji}}\right)\right] \qquad \text{Eq. 19-26}$$

NOTE: The calculation includes only paired data sets (hourly average) for the inlet and outlet pollutant measurements.

12.6 Sulfur Retention Credit for Compliance Fuel. If fuel sampling and analysis procedures in Section 12.5.2.1 are being used to determine average SO_2 emission rates (E_{as}) to the atmosphere from a coal-fired steam generating unit when there is no SO_2 control device, the following equation may be used to adjust the emission rate for sulfur retention credits (no credits are allowed for oil-fired systems) (E_{di}) for each sampling period using the following equation:

$$E_{di} = 0.97K\,\frac{\%S}{GDV} \qquad \text{Eq. 19-27}$$

Where:

$$K = 2\times10^7\left(\frac{ng\ SO_2}{\%S}\right)\left(\frac{kJ}{J}\right)\left(\frac{1}{kg\ coal}\right)\left[2\times10^4\left(\frac{lb\ SO_2}{\%S}\right)\left(\frac{Btu}{million\ Btu}\right)\left(\frac{1}{lb\ coal}\right)\right]$$

After calculating E_{di}, use the procedures in Section 12.4.2 to determine the average SO_2 emission rate to the atmosphere for the performance test period (E_{ao}).

12.7 Determination of Compliance When Minimum Data Requirement Is Not Met.

12.7.1 Adjusted Emission Rates and Control Device Removal Efficiency. When the minimum data requirement is not met, the Administrator may use the following adjusted emission rates or control device removal efficiencies to determine compliance with the applicable standards.

12.7.1.1 Emission Rate. Compliance with the emission rate standard may be determined by using the lower confidence limit of the emission rate (E_{ao}*) as follows:

$$E^*_{ao} = E_{ao} - t_{0.95}S_o \qquad \text{Eq. 19-28}$$

12.7.1.2 Control Device Removal Efficiency. Compliance with the overall emission reduction ($\%R_o$) may be determined by using the lower confidence limit of the emission rate (E_{ao}*) and the upper confidence limit of the inlet pollutant rate (E_{ai}*) in calculating the control device removal efficiency ($\%R_g$) as follows:

$$\%R_g = 100\left(1.0 - \frac{E^*_{ao}}{E^*_{ai}}\right) \qquad \text{Eq. 19-29}$$

$$E^*_{ai} = E_{ai} + t_{0.95}S_i \qquad \text{Eq. 19-30}$$

12.7.2 Standard Deviation of Hourly Average Pollutant Rates. Compute the standard deviation (S_e) of the hourly average pollutant rates using the following equation:

$$S_e = \sqrt{\frac{1}{H} - \frac{1}{H_r}}\sqrt{\frac{\sum_{j=1}^{H}\left(E_{hj} - E_a\right)^2}{H-1}} \qquad \text{Eq. 19-31}$$

Equation 19–19 through 19–31 may be used to compute the standard deviation for both the outlet (S_o) and, if applicable, inlet (S_i) pollutant rates.

13.0 Method Performance [Reserved]

14.0 Pollution Prevention [Reserved]

15.0 Waste Management [Reserved]

16.0 References [Reserved]

17.0 Tables, Diagrams, Flowcharts, and Validation Data

TABLE 19–1.—CONVERSION FACTORS FOR CONCENTRATION

From	To	Multiply by
g/scm	ng/scm	10^9
mg/scm	ng/scm	10^6
lb/scf	ng/scm	1.602×10^{13}
ppm SO_2	ng/scm	2.66×10^6
ppm NO_x	ng/scm	1.912×10^6
ppm SO_2	lb/scf	1.660×10^{-7}
ppm NO_x	lb/scf	1.194×10^{-7}

TABLE 19–2.—F FACTORS FOR VARIOUS FUELS[1]

Fuel Type	F_d		F_w		F_c	
	dscm/J	dscf/10^6 Btu	wscm/J	wscf/10^6 Btu	scm/J	scf/10^6 Btu
Coal:						
Anthracite[2]	2.71×10^{-7}	10,100	2.83×10^{-7}	10,540	0.530×10^{-7}	1,970
Bituminus[2]	2.63×10^{-7}	9,780	2.86×10^{-7}	10,640	0.484×10^{-7}	1,800
Lignite	2.65×10^{-7}	9,860	3.21×10^{-7}	11,950	0.513×10^{-7}	1,910
Oil[3]	2.47×10^{-7}	9,190	2.77×10^{-7}	10,320	0.383×10^{-7}	1,420
Gas:.						
Natural	2.34×10^{-7}	8,710	2.85×10^{-7}	10,610	0.287×10^{-7}	1,040
Propane	2.34×10^{-7}	8,710	2.74×10^{-7}	10,200	0.321×10^{-7}	1,190
Butane	2.34×10^{-7}	8,710	2.79×10^{-7}	10,390	0.337×10^{-7}	1,250
Wood	2.48×10^{-7}	9,240	.....	.....	0.492×10^{-7}	1,830
Wood Bark	2.58×10^{-7}	9,600	.....	.....	0.516×10^{-7}	1,920
Municipal	2.57×10^{-7}	9,570	.....	.....	0.488×10^{-7}	1,820
Solid Waste	.....	.....	.....	.....	.....	.....

[1] Determined at standard conditions: 20 °C (68 °F) and 760 mm Hg (29.92 in Hg)
[2] As classified according to ASTM D 388.
[3] Crude, residual, or distillate.

TABLE 19–3.—VALUES FOR $T_{0.95}$*

n[1]	$t_{0.95}$	n[1]	$t_{0.95}$	n[1]	$t_{0.95}$
2	6.31	8	1.89	22–26	1.71
3	2.42	9	1.86	27–31	1.70
4	2.35	10	1.83	32–51	1.68
5	2.13	11	1.81	52–91	1.67
6	2.02	12–16	1.77	92–151	1.66
7	1.94	17–21	1.73	152 or more	1.65

[1]The values of this table are corrected for n-1 degrees of freedom. Use n equal to the number (H) of hourly average data points.

* * * * *

Method 21—Determination of Volatile Organic Compound Leaks

1.0 Scope and Application

1.1 Analytes.

Analyte	CAS No.
Volatile Organic Compounds (VOC).	No CAS number assigned.

1.2 Scope. This method is applicable for the determination of VOC leaks from process equipment. These sources include, but are not limited to, valves, flanges and other connections, pumps and compressors, pressure relief devices, process drains, open-ended valves, pump and compressor seal system degassing vents, accumulator vessel vents, agitator seals, and access door seals.

1.3 Data Quality Objectives. Adherence to the requirements of this method will enhance the quality of the data obtained from air pollutant sampling methods.

2.0 Summary of Method

2.1 A portable instrument is used to detect VOC leaks from individual sources. The instrument detector type is not specified, but it must meet the specifications and performance criteria contained in Section 6.0. A leak definition concentration based on a reference compound is specified in each applicable regulation. This method is intended to locate and classify leaks only, and is not to be used as a direct measure of mass emission rate from individual sources.

3.0 Definitions

3.1 *Calibration gas* means the VOC compound used to adjust the instrument meter reading to a known value. The calibration gas is usually the reference compound at a known concentration approximately equal to the leak definition concentration.

3.2 *Calibration precision* means the degree of agreement between measurements of the same known value, expressed as the relative percentage of the average difference between the meter readings and the known concentration to the known concentration.

3.3 *Leak definition concentration* means the local VOC concentration at the surface of a leak source that indicates that a VOC emission (leak) is present. The leak definition is an instrument meter reading based on a reference compound.

3.4 *No detectable emission* means a local VOC concentration at the surface of a leak source, adjusted for local VOC ambient concentration, that is less than 2.5 percent of the specified leak definition concentration. that indicates that a VOC emission (leak) is not present.

3.5 *Reference compound* means the VOC species selected as the instrument calibration basis for specification of the leak definition concentration. (For example, if a leak definition concentration is 10,000 ppm as methane, then any source emission that results in a local concentration that yields a meter reading of 10,000 on an instrument meter calibrated with methane would be classified as a leak. In this example, the leak definition concentration is 10,000 ppm and the reference compound is methane.)

3.6 *Response factor* means the ratio of the known concentration of a VOC compound to the observed meter reading when measured using an instrument calibrated with the reference compound specified in the applicable regulation.

3.7 *Response time* means the time interval from a step change in VOC concentration at the input of the sampling system to the time at which 90 percent of the corresponding final value is reached as displayed on the instrument readout meter.

4.0 Interferences. [Reserved]

5.0 Safety

5.1 Disclaimer. This method may involve hazardous materials, operations, and equipment. This test method may not address all of the safety problems associated with its use. It is the responsibility of the user of this test method to establish appropriate safety and health practices and determine the applicability of regulatory limitations prior to performing this test method.

5.2 Hazardous Pollutants. Several of the compounds, leaks of which may be determined by this method, may be irritating or corrosive to tissues (*e.g.,* heptane) or may be toxic (*e.g.,* benzene, methyl alcohol). Nearly all are fire hazards. Compounds in emissions should be determined through familiarity with the source. Appropriate precautions can be found in reference documents, such as reference No. 4 in Section 16.0.

6.0 Equipment and Supplies

A VOC monitoring instrument meeting the following specifications is required:

6.1 The VOC instrument detector shall respond to the compounds being processed. Detector types that may meet this requirement include, but are not limited to, catalytic oxidation, flame ionization, infrared absorption, and photoionization.

6.2 The instrument shall be capable of measuring the leak definition concentration specified in the regulation.

6.3 The scale of the instrument meter shall be readable to ±2.5 percent of the specified leak definition concentration.

6.4 The instrument shall be equipped with an electrically driven pump to ensure that a sample is provided to the detector at a constant flow rate. The nominal sample flow rate, as measured at the sample probe tip, shall be 0.10 to 3.0 l/min (0.004 to 0.1 ft^3/min) when the probe is fitted with a glass wool plug or filter that may be used to prevent plugging of the instrument.

6.5 The instrument shall be equipped with a probe or probe extension or sampling not to exceed 6.4 mm (¼ in) in outside diameter, with a single end opening for admission of sample.

6.6 The instrument shall be intrinsically safe for operation in explosive atmospheres as defined by the National Electrical Code by the National Fire Prevention Association or other applicable regulatory code for operation in any explosive atmospheres that may be encountered in its use. The instrument shall, at a minimum, be intrinsically safe for Class 1, Division 1 conditions, and/or Class 2, Division 1 conditions, as appropriate, as defined by the example code. The instrument shall not be operated with any safety device, such as an exhaust flame arrestor, removed.

7.0 Reagents and Standards

7.1 Two gas mixtures are required for instrument calibration and performance evaluation:

7.1.1 Zero Gas. Air, less than 10 parts per million by volume (ppmv) VOC.

7.1.2 Calibration Gas. For each organic species that is to be measured during individual source surveys, obtain or prepare a known standard in air at a concentration approximately equal to the applicable leak definition specified in the regulation.

7.2 Cylinder Gases. If cylinder calibration gas mixtures are used, they must be analyzed and certified by the manufacturer to be within 2 percent accuracy, and a shelf life must be specified. Cylinder standards must be either reanalyzed or replaced at the end of the specified shelf life.

7.3 Prepared Gases. Calibration gases may be prepared by the user according to any accepted gaseous preparation procedure that will yield a mixture accurate to within 2 percent. Prepared standards must be replaced each day of use unless it is demonstrated that degradation does not occur during storage.

7.4 Mixtures with non-Reference Compound Gases. Calibrations may be performed using a compound other than the reference compound. In this case, a conversion factor must be determined for the alternative compound such that the resulting meter readings during source surveys can be converted to reference compound results.

8.0 Sample Collection, Preservation, Storage, and Transport

8.1 Instrument Performance Evaluation. Assemble and start up the instrument according to the manufacturer's instructions for recommended warmup period and preliminary adjustments.

8.1.1 Response Factor. A response factor must be determined for each compound that is to be measured, either by testing or from reference sources. The response factor tests are required before placing the analyzer into service, but do not have to be repeated at subsequent intervals.

8.1.1.1 Calibrate the instrument with the reference compound as specified in the applicable regulation. Introduce the calibration gas mixture to the analyzer and record the observed meter reading. Introduce zero gas until a stable reading is obtained. Make a total of three measurements by alternating between the calibration gas and zero gas. Calculate the response factor for each repetition and the average response factor.

8.1.1.2 The instrument response factors for each of the individual VOC to be measured shall be less than 10 unless otherwise specified in the applicable regulation. When no instrument is available that meets this specification when calibrated with the reference VOC specified in the applicable regulation, the available instrument may be calibrated with one of the VOC to be measured, or any other VOC, so long as the instrument then has a response factor of less than 10 for each of the individual VOC to be measured.

8.1.1.3 Alternatively, if response factors have been published for the compounds of interest for the instrument or detector type, the response factor determination is not required, and existing results may be referenced. Examples of published response factors for flame ionization and catalytic oxidation detectors are included in References 1–3 of Section 17.0.

8.1.2 Calibration Precision. The calibration precision test must be completed prior to placing the analyzer into service and at subsequent 3-month intervals or at the next use, whichever is later.

8.1.2.1 Make a total of three measurements by alternately using zero gas and the specified calibration gas. Record the meter readings. Calculate the average algebraic difference between the meter readings and the known value. Divide this average difference by the known calibration value and multiply by 100 to express the resulting calibration precision as a percentage.

8.1.2.2 The calibration precision shall be equal to or less than 10 percent of the calibration gas value.

8.1.3 Response Time. The response time test is required before placing the instrument into service. If a modification to the sample pumping system or flow configuration is made that would change the response time, a new test is required before further use.

8.1.3.1 Introduce zero gas into the instrument sample probe. When the meter reading has stabilized, switch quickly to the specified calibration gas. After switching, measure the time required to attain 90 percent of the final stable reading. Perform this test sequence three times and record the

results. Calculate the average response time.

8.1.3.2 The instrument response time shall be equal to or less than 30 seconds. The instrument pump, dilution probe (if any), sample probe, and probe filter that will be used during testing shall all be in place during the response time determination.

8.2 Instrument Calibration. Calibrate the VOC monitoring instrument according to Section 10.0.

8.3 Individual Source Surveys.

8.3.1 Type I—Leak Definition Based on Concentration. Place the probe inlet at the surface of the component interface where leakage could occur. Move the probe along the interface periphery while observing the instrument readout. If an increased meter reading is observed, slowly sample the interface where leakage is indicated until the maximum meter reading is obtained. Leave the probe inlet at this maximum reading location for approximately two times the instrument response time. If the maximum observed meter reading is greater than the leak definition in the applicable regulation, record and report the results as specified in the regulation reporting requirements. Examples of the application of this general technique to specific equipment types are:

8.3.1.1 Valves. The most common source of leaks from valves is the seal between the stem and housing. Place the probe at the interface where the stem exits the packing gland and sample the stem circumference. Also, place the probe at the interface of the packing gland take-up flange seat and sample the periphery. In addition, survey valve housings of multipart assembly at the surface of all interfaces where a leak could occur.

8.3.1.2 Flanges and Other Connections. For welded flanges, place the probe at the outer edge of the flange-gasket interface and sample the circumference of the flange. Sample other types of nonpermanent joints (such as threaded connections) with a similar traverse.

8.3.1.3 Pumps and Compressors. Conduct a circumferential traverse at the outer surface of the pump or compressor shaft and seal interface. If the source is a rotating shaft, position the probe inlet within 1 cm of the shaft-seal interface for the survey. If the housing configuration prevents a complete traverse of the shaft periphery, sample all accessible portions. Sample all other joints on the pump or compressor housing where leakage could occur.

8.3.1.4 Pressure Relief Devices. The configuration of most pressure relief devices prevents sampling at the sealing seat interface. For those devices equipped with an enclosed extension, or horn, place the probe inlet at approximately the center of the exhaust area to the atmosphere.

8.3.1.5 Process Drains. For open drains, place the probe inlet at approximately the center of the area open to the atmosphere. For covered drains, place the probe at the surface of the cover interface and conduct a peripheral traverse.

8.3.1.6 Open-ended Lines or Valves. Place the probe inlet at approximately the center of the opening to the atmosphere.

8.3.1.7 Seal System Degassing Vents and Accumulator Vents. Place the probe inlet at approximately the center of the opening to the atmosphere.

8.3.1.8 Access door seals. Place the probe inlet at the surface of the door seal interface and conduct a peripheral traverse.

8.3.2 Type II—''No Detectable Emission''. Determine the local ambient VOC concentration around the source by moving the probe randomly upwind and downwind at a distance of one to two meters from the source. If an interference exists with this determination due to a nearby emission or leak, the local ambient concentration may be determined at distances closer to the source, but in no case shall the distance be less than 25 centimeters. Then move the probe inlet to the surface of the source and determine the concentration as outlined in Section 8.3.1. The difference between these concentrations determines whether there are no detectable emissions. Record and report the results as specified by the regulation. For those cases where the regulation requires a specific device installation, or that specified vents be ducted or piped to a control device, the existence of these conditions shall be visually confirmed. When the regulation also requires that no detectable emissions exist, visual observations and sampling surveys are required. Examples of this technique are:

8.3.2.1 Pump or Compressor Seals. If applicable, determine the type of shaft seal. Perform a survey of the local area ambient VOC concentration and determine if detectable emissions exist as described in Section 8.3.2.

8.3.2.2 Seal System Degassing Vents, Accumulator Vessel Vents, Pressure Relief Devices. If applicable, observe whether or not the applicable ducting or piping exists. Also, determine if any sources exist in the ducting or piping where emissions could occur upstream of the control device. If the required ducting or piping exists and there are no sources where the emissions could be vented to the atmosphere upstream of the control device, then it is presumed that no detectable emissions are present. If there are sources in the ducting or piping where emissions could be vented or sources where leaks could occur, the sampling surveys described in Section 8.3.2 shall be used to determine if detectable emissions exist.

8.3.3 Alternative Screening Procedure.

8.3.3.1 A screening procedure based on the formation of bubbles in a soap solution that is sprayed on a potential leak source may be used for those sources that do not have continuously moving parts, that do not have surface temperatures greater than the boiling point or less than the freezing point of the soap solution, that do not have open areas to the atmosphere that the soap solution cannot bridge, or that do not exhibit evidence of liquid leakage. Sources that have these conditions present must be surveyed using the instrument technique of Section 8.3.1 or 8.3.2.

8.3.3.2 Spray a soap solution over all potential leak sources. The soap solution may be a commercially available leak detection solution or may be prepared using concentrated detergent and water. A pressure sprayer or squeeze bottle may be used to dispense the solution. Observe the potential leak sites to determine if any bubbles are formed. If no bubbles are observed, the source is presumed to have no detectable emissions or leaks as applicable. If any bubbles are observed, the instrument techniques of Section 8.3.1 or 8.3.2 shall be used to determine if a leak exists, or if the source has detectable emissions, as applicable.

9.0 Quality Control

Section	Quality control measure	Effect
8.1.2	Instrument calibration precision check	Ensure precision and accuracy, respectively, of instrument response to standard.
10.0	Instrument calibration.	

10.0 Calibration and Standardization

10.1 Calibrate the VOC monitoring instrument as follows. After the appropriate warmup period and zero internal calibration procedure, introduce the calibration gas into the instrument sample probe. Adjust the instrument meter readout to correspond to the calibration gas value.

Note: If the meter readout cannot be adjusted to the proper value, a malfunction of the analyzer is indicated and corrective actions are necessary before use.

11.0 Analytical Procedures. [Reserved]

12.0 Data Analyses and Calculations. [Reserved]

13.0 Method Performance. [Reserved]

14.0 Pollution Prevention. [Reserved]

15.0 Waste Management. [Reserved]

16.0 References

1. Dubose, D.A., and G.E. Harris. Response Factors of VOC Analyzers at a Meter Reading of 10,000 ppmv for Selected Organic Compounds. U.S. Environmental Protection Agency, Research Triangle Park, NC. Publication No. EPA 600/2–81051. September 1981.

2. Brown, G.E., *et al.* Response Factors of VOC Analyzers Calibrated with Methane for Selected Organic Compounds. U.S. Environmental Protection Agency, Research Triangle Park, NC. Publication No. EPA 600/2–81–022. May 1981.

3. DuBose, D.A. *et al.* Response of Portable VOC Analyzers to Chemical Mixtures. U.S. Environmental Protection Agency, Research Triangle Park, NC. Publication No. EPA 600/2–81–110. September 1981.

4. Handbook of Hazardous Materials: Fire, Safety, Health. Alliance of American Insurers. Schaumberg, IL. 1983.

17.0 Tables, Diagrams, Flowcharts, and Validation Data. [Reserved]

Method 22—Visual Determination of Fugitive Emissions From Material Sources and Smoke Emissions From Flares

Note: This method is not inclusive with respect to observer certification. Some material is incorporated by reference from Method 9.

1.0 Scope and Application

This method is applicable for the determination of the frequency of fugitive emissions from stationary sources, only as specified in an applicable subpart of the regulations. This method also is applicable for the determination of the frequency of visible smoke emissions from flares.

2.0 Summary of Method

2.1 Fugitive emissions produced during material processing, handling, and transfer operations or smoke emissions from flares are visually determined by an observer without the aid of instruments.

2.2 This method is used also to determine visible smoke emissions from flares used for combustion of waste process materials.

2.3 This method determines the amount of time that visible emissions occur during the observation period (*i.e.,* the accumulated emission time). This method does not require that the opacity of emissions be determined. Since this procedure requires only the determination of whether visible emissions occur and does not require the determination of opacity levels, observer certification according to the procedures of Method 9 is not required. However, it is necessary that the observer is knowledgeable with respect to the general procedures for determining the presence of visible emissions. At a minimum, the observer must be trained and knowledgeable regarding the effects of background contrast, ambient lighting, observer position relative to lighting, wind, and the presence of uncombined water (condensing water vapor) on the visibility of emissions. This training is to be obtained from written materials found in References 1 and 2 or from the lecture portion of the Method 9 certification course.

3.0 Definitions

3.1 *Emission frequency* means the percentage of time that emissions are visible during the observation period.

3.2 *Emission time* means the accumulated amount of time that emissions are visible during the observation period.

3.3 *Fugitive emissions* means emissions generated by an affected facility which is not collected by a capture system and is released to the atmosphere. This includes emissions that (1) escape capture by process equipment exhaust hoods; (2) are emitted during material transfer; (3) are emitted from buildings housing material processing or handling equipment; or (4) are emitted directly from process equipment.

3.4 *Observation period* means the accumulated time period during which observations are conducted, not to be less than the period specified in the applicable regulation.

3.5 *Smoke emissions* means a pollutant generated by combustion in a flare and occurring immediately downstream of the flame. Smoke occurring within the flame, but not downstream of the flame, is not considered a smoke emission.

4.0 Interferences

4.1 Occasionally, fugitive emissions from sources other than the affected facility (*e.g.,* road dust) may prevent a clear view of the affected facility. This may particularly be a problem during periods of high wind. If the view of the potential emission points is obscured to such a degree that the observer questions the validity of continuing observations, then the observations shall be terminated, and the observer shall clearly note this fact on the data form.

5.0 Safety

5.1 Disclaimer. This method may involve hazardous materials, operations, and equipment. This test method may not address all of the safety problems associated with its use. It is the responsibility of the user of this test method to establish appropriate safety and health practices and determine the applicability of regulatory limitations prior to performing this test method.

6.0 Equipment

6.1 Stopwatches (two). Accumulative type with unit divisions of at least 0.5 seconds.

6.2 Light Meter. Light meter capable of measuring illuminance in the 50 to 200 lux range, required for indoor observations only.

7.0 Reagents and Supplies. [Reserved]

8.0 Sample Collection, Preservation, Storage, and Transfer. [Reserved]

9.0 Quality Control. [Reserved]

10.0 Calibration and Standardization. [Reserved]

11.0 Analytical Procedure

11.1 Selection of Observation Location. Survey the affected facility, or the building or structure housing the process to be observed, and determine the locations of potential emissions. If the affected facility is located inside a building, determine an observation location that is consistent with the requirements of the applicable regulation (*i.e.,* outside observation of emissions escaping the building/structure or inside observation of emissions directly emitted from the affected facility process unit). Then select a position that enables a clear view of the potential emission point(s) of the affected facility or of the building or structure housing the affected facility, as appropriate for the applicable subpart. A position at least 4.6 m (15 feet), but not more than 400 m (0.25 miles), from the emission source is recommended. For outdoor locations, select a position where the sunlight is

not shining directly in the observer's eyes.

11.2 Field Records.

11.2.1 Outdoor Location. Record the following information on the field data sheet (Figure 22–1): Company name, industry, process unit, observer's name, observer's affiliation, and date. Record also the estimated wind speed, wind direction, and sky condition. Sketch the process unit being observed, and note the observer location relative to the source and the sun. Indicate the potential and actual emission points on the sketch.

11.2.2 Indoor Location. Record the following information on the field data sheet (Figure 22–2): Company name, industry, process unit, observer's name, observer's affiliation, and date. Record as appropriate the type, location, and intensity of lighting on the data sheet. Sketch the process unit being observed, and note the observer location relative to the source. Indicate the potential and actual fugitive emission points on the sketch.

11.3 Indoor Lighting Requirements. For indoor locations, use a light meter to measure the level of illumination at a location as close to the emission source(s) as is feasible. An illumination of greater than 100 lux (10 foot candles) is considered necessary for proper application of this method.

11.4 Observations.

11.4.1 Procedure. Record the clock time when observations begin. Use one stopwatch to monitor the duration of the observation period. Start this stopwatch when the observation period begins. If the observation period is divided into two or more segments by process shutdowns or observer rest breaks (see Section 11.4.3), stop the stopwatch when a break begins and restart the stopwatch without resetting it when the break ends. Stop the stopwatch at the end of the observation period. The accumulated time indicated by this stopwatch is the duration of observation period. When the observation period is completed, record the clock time. During the observation period, continuously watch the emission source. Upon observing an emission (condensed water vapor is not considered an emission), start the second accumulative stopwatch; stop the watch when the emission stops. Continue this procedure for the entire observation period. The accumulated elapsed time on this stopwatch is the total time emissions were visible during the observation period (*i.e.*, the emission time.)

11.4.2 Observation Period. Choose an observation period of sufficient length to meet the requirements for determining compliance with the emission standard in the applicable subpart of the regulations. When the length of the observation period is specifically stated in the applicable subpart, it may not be necessary to observe the source for this entire period if the emission time required to indicate noncompliance (based on the specified observation period) is observed in a shorter time period. In other words, if the regulation prohibits emissions for more than 6 minutes in any hour, then observations may (optional) be stopped after an emission time of 6 minutes is exceeded. Similarly, when the regulation is expressed as an emission frequency and the regulation prohibits emissions for greater than 10 percent of the time in any hour, then observations may (optional) be terminated after 6 minutes of emission are observed since 6 minutes is 10 percent of an hour. In any case, the observation period shall not be less than 6 minutes in duration. In some cases, the process operation may be intermittent or cyclic. In such cases, it may be convenient for the observation period to coincide with the length of the process cycle.

11.4.3 Observer Rest Breaks. Do not observe emissions continuously for a period of more than 15 to 20 minutes without taking a rest break. For sources requiring observation periods of greater than 20 minutes, the observer shall take a break of not less than 5 minutes and not more than 10 minutes after every 15 to 20 minutes of observation. If continuous observations are desired for extended time periods, two observers can alternate between making observations and taking breaks.

11.5 Recording Observations. Record the accumulated time of the observation period on the data sheet as the observation period duration. Record the accumulated time emissions were observed on the data sheet as the emission time. Record the clock time the observation period began and ended, as well as the clock time any observer breaks began and ended.

12.0 Data Analysis and Calculations

If the applicable subpart requires that the emission rate be expressed as an emission frequency (in percent), determine this value as follows: Divide the accumulated emission time (in seconds) by the duration of the observation period (in seconds) or by any minimum observation period required in the applicable subpart, if the actual observation period is less than the required period, and multiply this quotient by 100.

13.0 Method Performance. [Reserved]

14.0 Pollution Prevention. [Reserved]

15.0 Waste Management. [Reserved]

16.0 References

1. Missan, R., and A. Stein. Guidelines for Evaluation of Visible Emissions Certification, Field Procedures, Legal Aspects, and Background Material. EPA Publication No. EPA–340/1–75–007. April 1975.

2. Wohlschlegel, P., and D.E. Wagoner. Guideline for Development of a Quality Assurance Program: Volume IX— Visual Determination of Opacity Emissions from Stationary Sources. EPA Publication No. EPA–650/4–74–005i. November 1975.

BILLING CODE 6560–50–P

17.0 Tables, Diagrams, Flowcharts, and Validation Data

FUGITIVE OR SMOKE EMISSION INSPECTION
OUTDOOR LOCATION

Company Location Company Rep.	Observer Affiliation Date
Sky Conditions Precipitation	Wind Direction Wind Speed
Industry	Process Unit

Sketch process unit: indicate observer position relative to source; indicate potential emission points and/or actual emission points.

OBSERVATIONS	Clock Time	Observation period duration, min:sec	Accumulated emission time, min:sec
Begin Observation	_____		
		_____	_____
	_____	_____	_____
	_____	_____	_____
	_____	_____	_____
	_____	_____	_____
	_____	_____	_____
	_____	_____	_____
	_____	_____	_____
	_____	_____	_____
	_____		
End Observation		_____	_____
	_____		

Figure 22-1

FUGITIVE OR SMOKE EMISSION INSPECTION
INDOOR LOCATION

Company Location Company Rep.	Observer Affiliation Date
Industry	Process Unit

Light type (fluorescent, incandescent, natural)
Light location (overhead, behind observer, etc.)
Illuminance (lux or footcandles)
Sketch process unit: indicate observer position relative to source; indicate potential emission points and/or actual emission points.

OBSERVATIONS	Clock Time	Observation period duration, min:sec	Accumulated emission time, min:sec
Begin	_____	_____	_____
	_____	_____	_____
	_____	_____	_____
	_____	_____	_____
	_____	_____	_____
	_____	_____	_____
	_____	_____	_____
	_____	_____	_____
	_____	_____	_____
	_____	_____	_____
End Observation	_____		

Figure 22-2

BILLING CODE 6560–50–C

* * * * *

Method 24—Determination of Volatile Matter Content, Water Content, Density, Volume Solids, and Weight Solids of Surface Coatings

1.0 Scope and Application

1.1 Analytes.

Analyte	CAS No.
Volatile organic compounds Water.	No CAS Number assigned 7732–18–5

1.2 Applicability. This method is applicable for the determination of volatile matter content, water content, density, volume solids, and weight solids of paint, varnish, lacquer, or other related surface coatings.

1.3 Precision and Bias. Intra-and inter-laboratory analytical precision statements are presented in Section 13.1. No bias has been identified.

2.0 Summary of Method

2.1 Standard methods are used to determine the volatile matter content, water content, density, volume solids, and weight solids of paint, varnish, lacquer, or other related surface coatings.

3.0 Definitions

3.1 *Waterborne coating* means any coating which contains more than 5 percent water by weight in its volatile fraction.

3.2 *Multicomponent coatings* are coatings that are packaged in two or more parts, which are combined before application. Upon combination a coreactant from one part of the coating chemically reacts, at ambient conditions, with a coreactant from another part of the coating.

3.3 *Ultraviolet (UV) radiation-cured coatings* are coatings which contain unreacted monomers that are polymerized by exposure to ultraviolet light.

4.0 Interferences. [Reserved]

5.0 Safety

5.1 Disclaimer. This method may involve hazardous materials, operations, and equipment. This test method may not address all of the safety problems associated with its use. It is the responsibility of the user of this test method to establish appropriate safety and health practices and to determine the applicability of regulatory limitations prior to performing this test method.

5.2 Hazardous Components. Several of the compounds that may be contained in the coatings analyzed by this method may be irritating or corrosive to tissues (e.g., heptane) or may be toxic (e.g., benzene, methyl alcohol). Nearly all are fire hazards. Appropriate precautions can be found in reference documents, such as Reference 3 of Section 16.0.

6.0 Equipment and Supplies

The equipment and supplies specified in the ASTM methods listed in Sections 6.1 through 6.6 (incorporated by reference—see § 60.17 for acceptable versions of the methods) are required:

6.1 ASTM D 1475–60, 80, or 90, Standard Test Method for Density of Paint, Varnish, Lacquer, and Related Products.

6.2 ASTM D 2369–81, 87, 90, 92, 93, or 95, Standard Test Method for Volatile Content of Coatings.

6.3 ASTM D 3792–79 or 91, Standard Test Method for Water Content of Water Reducible Paints by Direct Injection into a Gas Chromatograph.

6.4 ASTM D 4017–81, 90, or 96a, Standard Test Method for Water in Paints and Paint Materials by the Karl Fischer Titration Method.

6.5 ASTM 4457–85 91, Standard Test Method for Determination of Dichloromethane and 1,1,1-Trichloroethane in Paints and Coatings by Direct Injection into a Gas Chromatograph.

6.6 ASTM D 5403–93, Standard Test Methods for Volatile Content of Radiation Curable Materials.

7.0 Reagents and Standards

7.1 The reagents and standards specified in the ASTM methods listed in Sections 6.1 through 6.6 are required.

8.0 Sample Collection, Preservation, Storage, and Transport

8.1 Follow the sample collection, preservation, storage, and transport procedures described in Reference 1 of Section 16.0.

9.0 Quality Control

9.1 Reproducibility

Note: Not applicable to UV radiation-cured coatings). The variety of coatings that may be subject to analysis makes it necessary to verify the ability of the analyst and the analytical procedures to obtain reproducible results for the coatings tested. Verification is accomplished by running duplicate analyses on each sample tested (Sections 11.2 through 11.4) and comparing the results with the intra-laboratory precision statements (Section 13.1) for each parameter.

9.2 Confidence Limits for Waterborne Coatings. Because of the inherent increased imprecision in the determination of the VOC content of waterborne coatings as the weight percent of water increases, measured parameters for waterborne coatings are replaced with appropriate confidence limits (Section 12.6). These confidence limits are based on measured parameters and inter-laboratory precision statements.

10.0 Calibration and Standardization

10.1 Perform the calibration and standardization procedures specified in the ASTM methods listed in Sections 6.1 through 6.6.

11.0 Analytical Procedure

Additional guidance can be found in Reference 2 of Section 16.0.

11.1 Non Thin-film Ultraviolet Radiation-cured (UV radiation-cured) Coatings.

11.1.1 Volatile Content. Use the procedure in ASTM D 5403 to determine the volatile matter content of the coating except the curing test described in NOTE 2 of ASTM D 5403 is required.

11.1.2 Water Content. To determine water content, follow Section 11.3.2.

11.1.3 Coating Density. To determine coating density, follow Section 11.3.3.

11.1.4 Solids Content. To determine solids content, follow Section 11.3.4.

11.1.5 To determine if a coating or ink can be classified as a thin-film UV cured coating or ink, use the equation in Section 12.2. If C is less than 0.2 g and A is greater than or equal to 225 cm^2 (35 in^2) then the coating or ink is considered a thin-film UV radiation-cured coating and ASTM D 5403 is not applicable.

Note: As noted in Section 1.4 of ASTM D 5403, this method may not be applicable to radiation curable materials wherein the volatile material is water.

11.2 Multi-component Coatings.

11.2.1 Sample Preparation.

11.2.1.1 Prepare about 100 ml of sample by mixing the components in a storage container, such as a glass jar with a screw top or a metal can with a cap. The storage container should be just large enough to hold the mixture. Combine the components (by weight or volume) in the ratio recommended by the manufacturer. Tightly close the container between additions and during mixing to prevent loss of volatile materials. However, most manufacturers mixing instructions are by volume. Because of possible error caused by expansion of the liquid when measuring the volume, it is recommended that the components be combined by weight. When weight is used to combine the components and the manufacturer's recommended ratio is by volume, the density must be determined by Section 11.3.3.

11.2.1.2 Immediately after mixing, take aliquots from this 100 ml sample for determination of the total volatile content, water content, and density.

11.2.2 Volatile Content. To determine total volatile content, use the apparatus and reagents described in ASTM D2369 Sections 3 and 4 (incorporated by reference—see § 60.17 for the approved versions of the standard), respectively, and use the following procedures:

11.2.2.1 Weigh and record the weight of an aluminum foil weighing dish. Add 3 ± 1 ml of suitable solvent as specified in ASTM D2369 to the weighing dish. Using a syringe as specified in ASTM D2369, weigh to 1 mg, by difference, a sample of coating into the weighing dish. For coatings believed to have a volatile content less than 40 weight percent, a suitable size is 0.3 + 0.10 g, but for coatings believed to have a volatile content greater than 40 weight percent, a suitable size is 0.5 ± 0.1 g.

Note: If the volatile content determined pursuant to Section 12.4 is not in the range corresponding to the sample size chosen repeat the test with the appropriate sample size. Add the specimen dropwise, shaking (swirling) the dish to disperse the specimen completely in the solvent. If the material forms a lump that cannot be dispersed, discard the specimen and prepare a new one. Similarly, prepare a duplicate. The sample shall stand for a minimum of 1 hour, but no more than 24 hours prior to being oven cured at 110 ± 5°C (230 ± 9°F) for 1 hour.

11.2.2.2 Heat the aluminum foil dishes containing the dispersed specimens in the forced draft oven for 60 min at 110 ± 5°C (230 ± 9°F). Caution—provide adequate ventilation, consistent with accepted laboratory practice, to prevent solvent vapors from accumulating to a dangerous level.

11.2.2.3 Remove the dishes from the oven, place immediately in a desiccator, cool to ambient temperature, and weigh to within 1 mg.

11.2.2.4 Run analyses in pairs (duplicate sets) for each coating mixture until the criterion in Section 11.4 is met. Calculate W_V following Equation 24–2 and record the arithmetic average.

11.2.3 Water Content. To determine water content, follow Section 11.3.2.

11.2.4 Coating Density. To determine coating density, follow Section 11.3.3.

11.2.5 Solids Content. To determine solids content, follow Section 11.3.4.

11.2.6 Exempt Solvent Content. To determine the exempt solvent content, follow Section 11.3.5.

Note: For all other coatings (*i.e.*, water-or solvent-borne coatings) not covered by multicomponent or UV radiation-cured coatings, analyze as shown below:

11.3 Water-or Solvent-borne coatings.

11.3.1 Volatile Content. Use the procedure in ASTM D 2369 to determine the volatile matter content (may include water) of the coating.

11.3.1.1 Record the following information:

W_1 = weight of dish and sample before heating, g

W_2 = weight of dish and sample after heating, g

W_3 = sample weight, g.

11.3.1.2 Calculate the weight fraction of the volatile matter (W_v) for each analysis as shown in Section 12.3.

11.3.1.3 Run duplicate analyses until the difference between the two values in a set is less than or equal to the intra-laboratory precision statement in Section 13.1.

11.3.1.4 Record the arithmetic average (W_v).

11.3.2 Water Content. For waterborne coatings only, determine the weight fraction of water (W_w) using either ASTM D 3792 or ASTM D 4017.

11.3.2.1 Run duplicate analyses until the difference between the two values in a set is less than or equal to the intra-laboratory precision statement in Section 13.1.

11.3.2.2 Record the arithmetic average (w_w).

11.3.3 Coating Density. Determine the density (Dc, kg/l) of the surface coating using the procedure in ASTM D 1475.

11.3.3.1 Run duplicate analyses until each value in a set deviates from the mean of the set by no more than the intra-laboratory precision statement in Section 13.1.

11.3.3.2 Record the arithmetic average (D_c).

11.3.4 Solids Content. Determine the volume fraction (V_s) solids of the coating by calculation using the manufacturer's formulation.

11.3.5 Exempt Solvent Content. Determine the weight fraction of exempt solvents (W_E) by using ASTM Method D4457. Run a duplicate set of determinations and record the arithmetic average (W_E).

11.4 Sample Analysis Criteria. For W_v and W_w, run duplicate analyses until the difference between the two values in a set is less than or equal to the intra-laboratory precision statement for that parameter. For D_c, run duplicate analyses until each value in a set deviates from the mean of the set by no more than the intra-laboratory precision statement. If, after several attempts, it is concluded that the ASTM procedures cannot be used for the specific coating with the established intra-laboratory precision (excluding UV radiation-cured coatings), the U.S. Environmental Protection Agency (EPA) will assume responsibility for providing the necessary procedures for revising the method or precision statements upon written request to: Director, Emissions, Monitoring, and Analysis Division, MD–14, Office of Air Quality Planning and Standards, U.S. Environmental Protection Agency, Research Triangle Park, NC 27711.

12.0 Calculations and Data Analysis

12.1 Nomenclature.

A = Area of substrate, cm^2, (in^2).

C = Amount of coating or ink added to the substrate, g.

D_c = Density of coating or ink, g/cm^3 (g/in^3).

F = Manufacturer's recommended film thickness, cm (in).

W_o = Weight fraction of nonaqueous volatile matter, g/g.

W_s = Weight fraction of solids, g/g.

W_v = Weight fraction of the volatile matter, g/g.

W_w = Weight fraction of the water, g/g.

12.2 To determine if a coating or ink can be classified as a thin-film UV cured coating or ink, use the following equation:

$$C = F\,A\,D_c \qquad \text{Eq. 24-1}$$

12.3 Calculate W_v for each analysis as shown below:

$$W_v = \frac{W_1 - W_2}{W_3} \qquad \text{Eq. 24-2}$$

12.4 Nonaqueous Volatile Matter.

12.4.1 Solvent-borne Coatings.

$$W_o = W_v \qquad \text{Eq. 24-3}$$

12.4.2 Waterborne Coatings.

$$W_o = W_v - W_w \qquad \text{Eq. 24-4}$$

12.4.3 Coatings Containing Exempt Solvents.

$$W_o = W_v - W_E - W_w \qquad \text{Eq. 24-5}$$

12.5 Weight Fraction Solids.

$$W_s = 1 - W_v \qquad \text{Eq. 24-6}$$

12.6 Confidence Limit Calculations for Waterborne Coatings. To calculate the lower confidence limit, subtract the appropriate inter-laboratory precision value from the measured mean value for that parameter. To calculate the upper confidence limit, add the appropriate inter-laboratory precision value to the measured mean value for that parameter. For W_v and D_c, use the lower confidence limits; for W_w, use the upper confidence limit. Because W_s is calculated, there is no adjustment for this parameter.

13.0 Method Performance

13.1 Analytical Precision Statements. The intra-and inter-laboratory precision statements are given in Table 24–1 in Section 17.0.

14.0 Pollution Prevention [Reserved]

15.0 Waste Management. [Reserved]

16.0 References

Same as specified in Section 6.0, with the addition of the following:

1. Standard Procedure for Collection of Coating and Ink Samples for Analysis by Reference Methods 24 and 24A. EPA–340/1–91–010. U.S. Environmental Protection Agency, Stationary Source Compliance Division, Washington, D.C. September 1991.

2. Standard Operating Procedure for Analysis of Coating and Ink Samples by Reference Methods 24 and 24A.

EPA–340/1–91–011. U.S. Environmental Protection Agency, Stationary Source Compliance Division, Washington, D.C. September 1991.

3. Handbook of Hazardous Materials: Fire, Safety, Health. Alliance of American Insurers. Schaumberg, IL. 1983.

17.0 Tables, Diagrams, Flowcharts, and Validation Data

TABLE 24–1.—ANALYTICAL PRECISION STATEMENTS

	Intra-laboratory	Inter-laboratory
Volatile matter content, W_v	$\pm 0.015\ \overline{W}_v$	$\pm 0.047\ \overline{W}_v$
Water content, W_w	$\pm 0.029\ \overline{W}_w$	$\pm 0.075\ \overline{W}_w$
Density, D_c	± 0.001 kg/l	± 0.002 kg/l

Method 24A—Determination of Volatile Matter Content and Density of Publication Rotogravure Inks and Related Publication Rotogravure Coatings

1.0 Scope and Application

1.1 Analytes.

Analyte	CAS No.
Volatile organic compounds (VOC).	No CAS number assigned.

1.2 Applicability. This method is applicable for the determination of the VOC content and density of solvent-borne (solvent-reducible) publication rotogravure inks and related publication rotogravure coatings.

2.0 Summary of Method

2.1 Separate procedures are used to determine the VOC weight fraction and density of the ink or related coating and the density of the solvent in the ink or related coating. The VOC weight fraction is determined by measuring the weight loss of a known sample quantity which has been heated for a specified length of time at a specified temperature. The density of both the ink or related coating and solvent are measured by a standard procedure. From this information, the VOC volume fraction is calculated.

3.0 Definitions [Reserved]

4.0 Interferences [Reserved]

5.0 Safety

5.1 Disclaimer. This method may involve hazardous materials, operations, and equipment. This test method does not purport to address all of the safety problems associated with its use. It is the responsibility of the user of this test method to establish appropriate safety and health practices and to determine the applicability of regulatory limitations prior to performing this test method.

5.2 Hazardous Components. Some of the compounds that may be contained in the inks or related coatings analyzed by this method may be irritating or corrosive to tissues or may be toxic. Nearly all are fire hazards. Appropriate precautions can be found in reference documents, such as Reference 6 of Section 16.0.

6.0 Equipment and Supplies

The following equipment and supplies are required for sample analysis:

6.1 Weighing Dishes. Aluminum foil, 58 mm (2.3 in.) in diameter by 18 mm (0.7 in.) high, with a flat bottom. There must be at least three weighing dishes per sample.

6.2 Disposable Syringe. 5 ml.

6.3 Analytical Balance. To measure to within 0.1 mg.

6.4 Oven. Vacuum oven capable of maintaining a temperature of 120 ± 2 °C (248 ± 4 °F) and an absolute pressure of 510 ± 51 mm Hg (20 ± 2 in. Hg) for 4 hours. Alternatively, a forced draft oven capable of maintaining a temperature of 120 ± 2 °C (248 ± 4 °F) for 24 hours.

6.5 The equipment and supplies specified in ASTM D 1475–60, 80, or 90 (incorporated by reference—see § 60.17).

7.0 Reagents and Standards

7.1 The reagents and standards specified in ASTM D 1475–60, 80, or 90 are required.

8.0 Sample Collection, Preservation, Storage, and Transport

8.1 Follow the sample collection, preservation, storage, and transport procedures described in Reference 4 of Section 16.0.

9.0 Quality Control [Reserved]

10.0 Calibration and Standardization [Reserved]

11.0 Analytical Procedure

Additional guidance can be found in Reference 5 of Section 16.0.

11.1 VOC Weight Fraction. Shake or mix the ink or related coating sample thoroughly to assure that all the solids are completely suspended. Label and weigh to the nearest 0.1 mg a weighing dish and record this weight (M_{x1}). Using a 5 ml syringe, without a needle, extract an aliquot from the ink or related coating sample. Weigh the syringe and aliquot to the nearest 0.1 mg and record this weight (M_{cy1}). Transfer 1 to 3 g of the aliquot to the tared weighing dish. Reweigh the syringe and remaining aliquot to the nearest 0.1 mg and record this weight (M_{cy2}). Heat the weighing dish with the transferred aliquot in a vacuum oven at an absolute pressure of 510 ± 51 mm Hg (20 ± 2 in. Hg) and a temperature of 120 ± 2 °C (248 ± 4 °F) for 4 hours. Alternatively, heat the weighing dish with the transferred aliquot in a forced draft oven at a temperature of 120 ± 2 °C for 24 hours. After the weighing dish has cooled, reweigh it to the nearest 0.1 mg and record the weight (M_{x2}). Repeat this procedure two times for each ink or related coating sample, for a total of three samples.

11.2 Ink or Related Coating Density. Determine the density of the ink or related coating (D_c) according to the procedure outlined in ASTM D 1475. Make a total of three determinations for each ink or related coating sample. Report the ink or related coating density as the arithmetic average (D_c) of the three determinations.

11.3 Solvent Density. Determine the density of the solvent (D_o) according to

the procedure outlined in ASTM D 1475. Make a total of three determinations for each ink or related coating sample. Report the solvent density as the arithmetic average (D_o) of the three determinations.

12.0 Calculations and Data Analysis

12.1 VOC Weight Fraction. For each determination, calculate the volatile organic content weight fraction (W_o) using the following equation:

$$W_o = \frac{M_{x1} + M_{cy1} - M_{cy2} - M_{x2}}{M_{cy1} - M_{cy2}} \qquad \text{Eq. 24A-1}$$

Make a total of three determinations. Report the VOC weight fraction as the arithmetic average ($\overline{W}_o$) of the three determinations.

12.2 VOC Volume Fraction. Calculate the volume fraction volatile organic content (V_o) using the following equation:

$$V_o = \frac{\overline{W}_o \overline{D}_c}{\overline{D}_o} \qquad \text{Eq. 24A-2}$$

13.0 Method Performance [Reserved]

14.0 Pollution Prevention [Reserved]

15.0 Waste Management [Reserved]

16.0 References

1. Standard Test Method for Density of Paint, Varnish, Lacquer, and Related Products. ASTM Designation D 1475.
2. Teleconversation. Wright, Chuck, Inmont Corporation with Reich, R., A., Radian Corporation. September 25, 1979, Gravure Ink Analysis.
3. Teleconversation. Oppenheimer, Robert, Gravure Research Institute with Burt, Rick, Radian Corporation, November 5, 1979, Gravure Ink Analysis.
4. Standard Procedure for Collection of Coating and Ink Samples for Analysis by Reference Methods 24 and 24A. EPA–340/1–91–010. U.S. Environmental Protection Agency, Stationary Source Compliance Division, Washington, D.C. September 1991.
5. Standard Operating Procedure for Analysis of Coating and Ink Samples by Reference Methods 24 and 24A. EPA–340/1–91–011. U.S. Environmental Protection Agency, Stationary Source Compliance Division, Washington, D.C. September 1991.
6. Handbook of Hazardous Materials: Fire, Safety, Health. Alliance of American Insurers. Schaumberg, IL. 1983.

17.0 Tables, Diagrams, Flowcharts, and Validation Data. [Reserved]

Method 25—Determination of Total Gaseous Nonmethane Organic Emissions as Carbon

1.0 Scope and Application

1.1 Analytes.

Analyte	CAS No.	Sensitivity
Total gaseous nonmethane organic compounds (TGNMO)	N/A	Dependent upon analytical equipment.

1.2 Applicability.

1.2.1 This method is applicable for the determination of volatile organic compounds (VOC) (measured as total gaseous nonmethane organics (TGNMO) and reported as carbon) in stationary source emissions. This method is not applicable for the determination of organic particulate matter.

1.2.2 This method is not the only method that applies to the measurement of VOC. Costs, logistics, and other practicalities of source testing may make other test methods more desirable for measuring VOC contents of certain effluent streams. Proper judgment is required in determining the most applicable VOC test method. For example, depending upon the molecular composition of the organics in the effluent stream, a totally automated semicontinuous nonmethane organics (NMO) analyzer interfaced directly to the source may yield accurate results. This approach has the advantage of providing emission data semicontinuously over an extended time period.

1.2.3 Direct measurement of an effluent with a flame ionization detector (FID) analyzer may be appropriate with prior characterization of the gas stream and knowledge that the detector responds predictably to the organic compounds in the stream. If present, methane (CH_4) will, of course, also be measured. The FID can be used under any of the following limited conditions: (1) Where only one compound is known to exist; (2) when the organic compounds consist of only hydrogen and carbon; (3) where the relative percentages of the compounds are known or can be determined, and the FID responses to the compounds are known; (4) where a consistent mixture of the compounds exists before and after emission control and only the relative concentrations are to be assessed; or (5) where the FID can be calibrated against mass standards of the compounds emitted (solvent emissions, for example).

1.2.4 Another example of the use of a direct FID is as a screening method. If there is enough information available to provide a rough estimate of the analyzer accuracy, the FID analyzer can be used to determine the VOC content of an uncharacterized gas stream. With a sufficient buffer to account for possible inaccuracies, the direct FID can be a useful tool to obtain the desired results without costly exact determination.

1.2.5 In situations where a qualitative/quantitative analysis of an

effluent stream is desired or required, a gas chromatographic FID system may apply. However, for sources emitting numerous organics, the time and expense of this approach will be formidable.

2.0 Summary of Method

2.1 An emission sample is withdrawn from the stack at a constant rate through a heated filter and a chilled condensate trap by means of an evacuated sample tank. After sampling is completed, the TGNMO are determined by independently analyzing the condensate trap and sample tank fractions and combining the analytical results. The organic content of the condensate trap fraction is determined by oxidizing the NMO to carbon dioxide (CO_2) and quantitatively collecting in the effluent in an evacuated vessel; then a portion of the CO_2 is reduced to CH_4 and measured by an FID. The organic content of the sample tank fraction is measured by injecting a portion of the sample into a gas chromatographic column to separate the NMO from carbon monoxide (CO), CO_2, and CH_4; the NMO are oxidized to CO_2, reduced to CH_4, and measured by an FID. In this manner, the variable response of the FID associated with different types of organics is eliminated.

3.0 Definitions [Reserved]

4.0 Interferences

4.1 Carbon Dioxide and Water Vapor. When carbon dioxide (CO_2) and water vapor are present together in the stack, they can produce a positive bias in the sample. The magnitude of the bias depends on the concentrations of CO_2 and water vapor. As a guideline, multiply the CO_2 concentration, expressed as volume percent, times the water vapor concentration. If this product does not exceed 100, the bias can be considered insignificant. For example, the bias is not significant for a source having 10 percent CO_2 and 10 percent water vapor, but it might be significant for a source having 10 percent CO_2 and 20 percent water vapor.

4.2. Particulate Matter. Collection of organic particulate matter in the condensate trap would produce a positive bias. A filter is included in the sampling equipment to minimize this bias.

5.0 Safety

5.1 Disclaimer. This method may involve hazardous materials, operations, and equipment. This test method may not address all of the safety problems associated with its use. It is the responsibility of the user of this test method to establish appropriate safety and health practices and determine the applicability of regulatory limitations prior to performing this test method.

6.0 Equipment and Supplies

6.1 Sample Collection. The sampling system consists of a heated probe, heated filter, condensate trap, flow control system, and sample tank (see Figure 25–1). The TGNMO sampling equipment can be constructed from commercially available components and components fabricated in a machine shop. The following equipment is required:

6.1.1 Heated Probe. 6.4-mm (¼-in.) OD stainless steel tubing with a heating system capable of maintaining a gas temperature at the exit end of at least 129 °C (265 °F). The probe shall be equipped with a temperature sensor at the exit end to monitor the gas temperature. A suitable probe is shown in Figure 25–1. The nozzle is an elbow fitting attached to the front end of the probe while the temperature sensor is inserted in the side arm of a tee fitting attached to the rear of the probe. The probe is wrapped with a suitable length of high temperature heating tape, and then covered with two layers of glass cloth insulation and one layer of aluminum foil or an equivalent wrapping.

Note: If it is not possible to use a heating system for safety reasons, an unheated system with an in-stack filter is a suitable alternative.

6.1.2 Filter Holder. 25-mm (15/16-in.) ID Gelman filter holder with 303 stainless steel body and 316 stainless steel support screen with the Viton O-ring replaced by a Teflon O-ring.

6.1.3 Filter Heating System.

6.1.3.1 A metal box consisting of an inner and an outer shell separated by insulating material with a heating element in the inner shell capable of maintaining a gas temperature at the filter of 121 ± 3 °C (250 ± 5 °F). The heating box shall include temperature sensors to monitor the gas temperature immediately upstream and immediately downstream of the filter.

6.1.3.2 A suitable heating box is shown in Figure 25–2. The outer shell is a metal box that measures 102 mm x 280 mm x 292 mm (4 in. x 11 in. x 11½ in.), while the inner shell is a metal box measuring 76 mm x 229 mm x 241 mm (3 in. x 9 in. x 9½ in.). The inner box is supported by 13-mm (½-in.) phenolic rods. The void space between the boxes is filled with ceramic fiber insulation which is sealed in place by means of a silicon rubber bead around the upper sides of the box. A removable lid made in a similar manner, with a 25-mm (1-in.) gap between the parts is used to cover the heating chamber. The inner box is heated with a 250-watt cartridge heater, shielded by a stainless steel shroud. The heater is regulated by a thermostatic temperature controller which is set to maintain a gas temperature of 121 °C (250 °F) as measured by the temperature sensor upstream of the filter.

Note: If it is not possible to use a heating system for safety reasons, an unheated system with an in-stack filter is a suitable alternative.

6.1.4 Condensate Trap. 9.5-mm (⅜-in.) OD 316 stainless steel tubing bent into a U-shape. Exact dimensions are shown in Figure 25–3. The tubing shall be packed with coarse quartz wool, to a density of approximately 0.11 g/cm^3 before bending. While the condensate trap is packed with dry ice in the Dewar, an ice bridge may form between the arms of the condensate trap making it difficult to remove the condensate trap. This problem can be prevented by attaching a steel plate between the arms of the condensate trap in the same plane as the arms to completely fill the intervening space.

6.1.5 Valve. Stainless steel control valve for starting and stopping sample flow.

6.1.6 Metering Valve. Stainless steel valve for regulating the sample flow rate through the sample train.

6.1.7 Rate Meter. Rotameter, or equivalent, capable of measuring sample flow in the range of 60 to 100 cm^3/min (0.13 to 0.21 ft^3/hr).

6.1.8 Sample Tank. Stainless steel or aluminum tank with a minimum volume of 4 liters (0.14 ft^3).

Note: Sample volumes greater than 4 liters may be required for sources with low organic concentrations.

6.1.9 Mercury Manometer. U-tube manometer or absolute pressure gauge capable of measuring pressure to within 1 mm Hg in the range of 0 to 900 mm.

6.1.10 Vacuum Pump. Capable of evacuating to an absolute pressure of 10 mm Hg.

6.2 Condensate Recovery. The system for the recovery of the organics captured in the condensate trap consists of a heat source, an oxidation catalyst, a nondispersive infrared (NDIR) analyzer, and an intermediate collection vessel (ICV). Figure 25–4 is a schematic of a typical system. The system shall be capable of proper oxidation and recovery, as specified in Section 10.1.1. The following major components are required:

6.2.1 Heat Source. Sufficient to heat the condensate trap (including probe) to a temperature of 200 °C (390 °F). A system using both a heat gun and an electric tube furnace is recommended.

6.2.2 Heat Tape. Sufficient to heat the connecting tubing between the water trap and the oxidation catalyst to 100 °C (212 °F).

6.2.3 Oxidation Catalyst. A suitable length of 9.5 mm (3/8-in.) OD Inconel 600 tubing packed with 15 cm (6 in.) of 3.2 mm (3/8-in.) diameter 19 percent chromia on alumina pellets. The catalyst material is packed in the center of the catalyst tube with quartz wool packed on either end to hold it in place.

6.2.4 Water Trap. Leak-proof, capable of removing moisture from the gas stream.

6.2.5 Syringe Port. A 6.4-mm (1/4-in.) OD stainless steel tee fitting with a rubber septum placed in the side arm.

6.2.6 NDIR Detector. Capable of indicating CO_2 concentration in the range of zero to 5 percent, to monitor the progress of combustion of the organic compounds from the condensate trap.

6.2.7 Flow-Control Valve. Stainless steel, to maintain the trap conditioning system near atmospheric pressure.

6.2.8 Intermediate Collection Vessel. Stainless steel or aluminum, equipped with a female quick connect. Tanks with nominal volumes of at least 6 liters (0.2 ft^3) are recommended.

6.2.9 Mercury Manometer. Same as described in Section 6.1.9.

6.2.10 Syringe. 10-ml gas-tight glass syringe equipped with an appropriate needle.

6.2.11 Syringes. 10-µl and 50-µl liquid injection syringes.

6.2.12 Liquid Sample Injection Unit. 316 Stainless steel U-tube fitted with an injection septum (see Figure 25–7).

6.3 Analysis.

6.3.1 NMO Analyzer. The NMO analyzer is a gas chromatograph (GC) with backflush capability for NMO analysis and is equipped with an oxidation catalyst, reduction catalyst, and FID. Figures 25–5 and 25–6 are schematics of a typical NMO analyzer. This semicontinuous GC/FID analyzer shall be capable of: (1) Separating CO, CO_2, and CH_4 from NMO, (2) reducing the CO_2 to CH_4 and quantifying as CH_4, and (3) oxidizing the NMO to CO_2, reducing the CO_2 to CH_4 and quantifying as CH_4, according to Section 10.1.2. The analyzer consists of the following major components:

6.3.1.1 Oxidation Catalyst. A suitable length of 9.5-mm (3/8-in.) OD Inconel 600 tubing packed with 5.1 cm (2 in.) of 19 percent chromia on 3.2-mm (1/8-in.) alumina pellets. The catalyst material is packed in the center of the tube supported on either side by quartz wool. The catalyst tube must be mounted vertically in a 650 °C (1200 °F) furnace. Longer catalysts mounted horizontally may be used, provided they can meet the specifications of Section 10.1.2.1.

6.3.1.2 Reduction Catalyst. A 7.6-cm (3-in.) length of 6.4-mm (1/4-in.) OD Inconel tubing fully packed with 100-mesh pure nickel powder. The catalyst tube must be mounted vertically in a 400 °C (750 °F) furnace.

6.3.1.3 Separation Column(s). A 30-cm (1-ft) length of 3.2-mm (1/8-in.) OD stainless steel tubing packed with 60/80 mesh Unibeads 1S followed by a 61-cm (2-ft) length of 3.2-mm (1/8-in.) OD stainless steel tubing packed with 60/80 mesh Carbosieve G. The Carbosieve and Unibeads columns must be baked separately at 200 °C (390 °F) with carrier gas flowing through them for 24 hours before initial use.

6.3.1.4 Sample Injection System. A single 10-port GC sample injection valve or a group of valves with sufficient ports fitted with a sample loop properly sized to interface with the NMO analyzer (1-cc loop recommended).

6.3.1.5 FID. An FID meeting the following specifications is required:

6.3.1.5.1 Linearity. A linear response (±5 percent) over the operating range as demonstrated by the procedures established in Section 10.1.2.3.

6.3.1.5.2 Range. A full scale range of 10 to 50,000 ppm CH_4. Signal attenuators shall be available to produce a minimum signal response of 10 percent of full scale.

6.3.1.6 Data Recording System. Analog strip chart recorder or digital integration system compatible with the FID for permanently recording the analytical results.

6.3.2 Barometer. Mercury, aneroid, or other barometer capable of measuring atmospheric pressure to within 1 mm Hg.

6.3.3 Temperature Sensor. Capable of measuring the laboratory temperature within 1 °C (2 °F).

6.3.4 Vacuum Pump. Capable of evacuating to an absolute pressure of 10 mm Hg.

7.0 Reagents and Standards

7.1 Sample Collection. The following reagents are required for sample collection:

7.1.1 Dry Ice. Solid CO2, crushed.

7.1.2 Coarse Quartz Wool. 8 to 15 um.

7.1.3 Filters. Glass fiber filters, without organic binder.

7.2 NMO Analysis. The following gases are required for NMO analysis:

7.2.1 Carrier Gases. Helium (He) and oxygen (O_2) containing less than 1 ppm CO_2 and less than 0.1 ppm hydrocarbon.

7.2.2 Fuel Gas. Hydrogen (H_2), at least 99.999 percent pure.

7.2.3 Combustion Gas. Either air (less than 0.1 ppm total hydrocarbon content) or O_2 (purity 99.99 percent or greater), as required by the detector.

7.3 Condensate Analysis. The following are required for condensate analysis:

7.3.1 Gases. Containing less than 1 ppm carbon.

7.3.1.1 Air.

7.3.1.2 Oxygen.

7.3.2 Liquids. To conform to the specifications established by the Committee on Analytical Reagents of the American Chemical Society.

7.3.2.1 Hexane.

7.3.2.2 Decane.

7.4 Calibration. For all calibration gases, the manufacturer must recommend a maximum shelf life for each cylinder (i.e., the length of time the gas concentration is not expected to change more than ±5 percent from its certified value). The date of gas cylinder preparation, certified organic concentration, and recommended maximum shelf life must be affixed to each cylinder before shipment from the gas manufacturer to the buyer. The following calibration gases are required:

7.4.1 Oxidation Catalyst Efficiency Check Calibration Gas. Gas mixture standard with nominal concentration of 1 percent methane in air.

7.4.2 FID Linearity and NMO Calibration Gases. Three gas mixture standards with nominal propane concentrations of 20 ppm, 200 ppm, and 3000 ppm, in air.

7.4.3 CO_2 Calibration Gases. Three gas mixture standards with nominal CO_2 concentrations of 50 ppm, 500 ppm, and 1 percent, in air.

Note: Total NMO less than 1 ppm required for 1 percent mixture.

7.4.4 NMO Analyzer System Check Calibration Gases. Four calibration gases are needed as follows:

7.4.4.1 Propane Mixture. Gas mixture standard containing (nominal) 50 ppm CO, 50 ppm CH_4, 1 percent CO_2, and 20 ppm C_3H_8, prepared in air.

7.4.4.2 Hexane. Gas mixture standard containing (nominal) 50 ppm hexane in air.

7.4.4.3 Toluene. Gas mixture standard containing (nominal) 20 ppm toluene in air.

7.4.4.4 Methanol. Gas mixture standard containing (nominal) 100 ppm methanol in air.

7.5 Quality Assurance Audit Samples.

7.5.1 It is recommended, but not required, that a performance audit sample be analyzed in conjunction with the field samples. The audit sample should be in a suitable sample matrix at

a concentration similar to the actual field samples.

7.5.2 When making compliance determinations, and upon availability, audit samples may be obtained from the appropriate EPA Regional Office or from the responsible enforcement authority and analyzed in conjunction with the field samples.

Note: The responsible enforcement authority should be notified at least 30 days prior to the test date to allow sufficient time for sample delivery.

8.0 Sample Collection, Preservation, Transport, and Storage

8.1 Sampling Equipment Preparation.

8.1.1 Condensate Trap Cleaning. Before its initial use and after each use, a condensate trap should be thoroughly cleaned and checked to ensure that it is not contaminated. Both cleaning and checking can be accomplished by installing the trap in the condensate recovery system and treating it as if it were a sample. The trap should be heated as described in Section 11.1.3. A trap may be considered clean when the CO_2 concentration in its effluent gas drops below 10 ppm. This check is optional for traps that most recently have been used to collect samples which were then recovered according to the procedure in Section 11.1.3.

8.1.2 Sample Tank Evacuation and Leak-Check. Evacuate the sample tank to 10 mm Hg absolute pressure or less. Then close the sample tank valve, and allow the tank to sit for 60 minutes. The tank is acceptable if a change in tank vacuum of less than 1 mm Hg is noted. The evacuation and leak-check may be conducted either in the laboratory or the field.

8.1.3 Sampling Train Assembly. Just before assembly, measure the tank vacuum using a mercury manometer. Record this vacuum, the ambient temperature, and the barometric pressure at this time. Close the sample tank valve and assemble the sampling system as shown in Figure 25–1. Immerse the condensate trap body in dry ice at least 30 minutes before commencing sampling to improve collection efficiency. The point where the inlet tube joins the trap body should be 2.5 to 5 cm (1 to 2 in.) above the top of the dry ice.

8.1.4 Pretest Leak-Check. A pretest leak-check is required. Calculate or measure the approximate volume of the sampling train from the probe tip to the sample tank valve. After assembling the sampling train, plug the probe tip, and make certain that the sample tank valve is closed. Turn on the vacuum pump, and evacuate the sampling system from the probe tip to the sample tank valve to an absolute pressure of 10 mm Hg or less. Close the purge valve, turn off the pump, wait a minimum period of 10 minutes, and recheck the indicated vacuum. Calculate the maximum allowable pressure change based on a leak rate of 1 percent of the sampling rate using Equation 25–1, Section 12.2. If the measured pressure change exceeds the allowable, correct the problem and repeat the leak-check before beginning sampling.

8.2 Sample Collection.

8.2.1 Unplug the probe tip, and place the probe into the stack such that the probe is perpendicular to the duct or stack axis; locate the probe tip at a single preselected point of average velocity facing away from the direction of gas flow. For stacks having a negative static pressure, seal the sample port sufficiently to prevent air in-leakage around the probe. Set the probe temperature controller to 129 °C (265 °F) and the filter temperature controller to 121 °C (250 °F). Allow the probe and filter to heat for about 30 minutes before purging the sample train.

8.2.2 Close the sample valve, open the purge valve, and start the vacuum pump. Set the flow rate between 60 and 100 cm^3/min (0.13 and 0.21 ft^3/hr), and purge the train with stack gas for at least 10 minutes.

8.2.3 When the temperatures at the exit ends of the probe and filter are within the corresponding specified ranges, check the dry ice level around the condensate trap, and add dry ice if necessary. Record the clock time. To begin sampling, close the purge valve and stop the pump. Open the sample valve and the sample tank valve. Using the flow control valve, set the flow through the sample train to the proper rate. Adjust the flow rate as necessary to maintain a constant rate (±10 percent) throughout the duration of the sampling period. Record the sample tank vacuum and flowmeter setting at 5-minute intervals. (See Figure 25–8.) Select a total sample time greater than or equal to the minimum sampling time specified in the applicable subpart of the regulations; end the sampling when this time period is reached or when a constant flow rate can no longer be maintained because of reduced sample tank vacuum.

Note: If sampling had to be stopped before obtaining the minimum sampling time (specified in the applicable subpart) because a constant flow rate could not be maintained, proceed as follows: After closing the sample tank valve, remove the used sample tank from the sampling train (without disconnecting other portions of the sampling train). Take another evacuated and leak-checked sample tank, measure and record the tank vacuum, and attach the new tank to the sampling train. After the new tank is attached to the sample train, proceed with the sampling until the required minimum sampling time has been exceeded.

8.3 Sample Recovery. After sampling is completed, close the flow control valve, and record the final tank vacuum; then record the tank temperature and barometric pressure. Close the sample tank valve, and disconnect the sample tank from the sample system. Disconnect the condensate trap at the inlet to the rate meter, and tightly seal both ends of the condensate trap. Do not include the probe from the stack to the filter as part of the condensate sample.

8.4 Sample Storage and Transport. Keep the trap packed in dry ice until the samples are returned to the laboratory for analysis. Ensure that run numbers are identified on the condensate trap and the sample tank(s).

9.0 Quality Control

Section	Quality control measure	Effect
10.1.1	Initial performance check of condensate recovery apparatus.	Ensure acceptable condensate recovery efficiency.
10.1.2, 10.2	NMO analyzer initial and daily performance checks.	Ensure precision of analytical results.
11.3	Audit Sample Analyses	Evaluate analytical technique and instrument calibration.

10.0 Calibration and Standardization

Note: Maintain a record of performance of each item.

10.1 Initial Performance Checks.

10.1.1 Condensate Recovery Apparatus. Perform these tests before the system is first placed in operation, after any shutdown of 6 months or more, and after any major modification of the system, or at the frequency recommended by the manufacturer.

10.1.1.1 Carrier Gas and Auxiliary O_2 Blank Check. Analyze each new tank of carrier gas or auxiliary O_2 with the NMO analyzer to check for contamination. Treat the gas cylinders as noncondensible gas samples, and analyze according to the procedure in Section 11.2.3. Add together any measured CH_4, CO, CO_2, or NMO. The total concentration must be less than 5 ppm.

10.1.1.2 Oxidation Catalyst Efficiency Check.

10.1.1.2.1 With a clean condensate trap installed in the recovery system or a ⅛″ stainless steel connector tube, replace the carrier gas cylinder with the high level methane standard gas cylinder (Section 7.4.1). Set the four-port valve to the recovery position, and attach an ICV to the recovery system. With the sample recovery valve in vent position and the flow-control and ICV valves fully open, evacuate the manometer or gauge, the connecting tubing, and the ICV to 10 mm Hg absolute pressure. Close the flow-control and vacuum pump valves.

10.1.1.2.2 After the NDIR response has stabilized, switch the sample recovery valve from vent to collect. When the manometer or pressure gauge begins to register a slight positive pressure, open the flow-control valve. Keep the flow adjusted such that the pressure in the system is maintained within 10 percent of atmospheric pressure. Continue collecting the sample in a normal manner until the ICV is filled to a nominal gauge pressure of 300 mm Hg. Close the ICV valve, and remove the ICV from the system. Place the sample recovery valve in the vent position, and return the recovery system to its normal carrier gas and normal operating conditions. Analyze the ICV for CO_2 using the NMO analyzer; the catalyst efficiency is acceptable if the CO_2 concentration is within 2 percent of the methane standard concentration.

10.1.1.3 System Performance Check. Construct a liquid sample injection unit similar in design to the unit shown in Figure 25–7. Insert this unit into the condensate recovery and conditioning system in place of a condensate trap, and set the carrier gas and auxiliary O_2 flow rates to normal operating levels. Attach an evacuated ICV to the system, and switch from system vent to collect. With the carrier gas routed through the injection unit and the oxidation catalyst, inject a liquid sample (see Sections 10.1.1.3.1 to 10.1.1.3.4) into the injection port. Operate the trap recovery system as described in Section 11.1.3. Measure the final ICV pressure, and then analyze the vessel to determine the CO_2 concentration. For each injection, calculate the percent recovery according to Section 12.7. Calculate the relative standard deviation for each set of triplicate injections according to Section 12.8. The performance test is acceptable if the average percent recovery is 100 ± 5 percent and the relative standard deviation is less than 2 percent for each set of triplicate injections.

10.1.1.3.1 50 µl hexane.

10.1.1.3.2 10 µl hexane.

10.1.1.3.3 50 µl decane.

10.1.1.3.4 10 µl decane.

10.1.2 NMO Analyzer. Perform these tests before the system is first placed in operation, after any shutdown longer than 6 months, and after any major modification of the system.

10.1.2.1 Oxidation Catalyst Efficiency Check. Turn off or bypass the NMO analyzer reduction catalyst. Make triplicate injections of the high level methane standard (Section 7.4.1). The oxidation catalyst operation is acceptable if the FID response is less than 1 percent of the injected methane concentration.

10.1.2.2 Reduction Catalyst Efficiency Check. With the oxidation catalyst unheated or bypassed and the heated reduction catalyst bypassed, make triplicate injections of the high level methane standard (Section 7.4.1). Repeat this procedure with both catalysts operative. The reduction catalyst operation is acceptable if the responses under both conditions agree within 5 percent of their average.

10.1.2.3 NMO Analyzer Linearity Check Calibration. While operating both the oxidation and reduction catalysts, conduct a linearity check of the analyzer using the propane standards specified in Section 7.4.2. Make triplicate injections of each calibration gas. For each gas (*i.e.,* each set of triplicate injections), calculate the average response factor (area/ppm C) for each gas, as well as and the relative standard deviation (according to Section 12.8). Then calculate the overall mean of the response factor values. The instrument linearity is acceptable if the average response factor of each calibration gas is within 2.5 percent of the overall mean value and if the relative standard deviation gas is less than 2 percent of the overall mean value. Record the overall mean of the propane response factor values as the NMO calibration response factor (RF_{NMO}). Repeat the linearity check using the CO_2 standards specified in Section 7.4.3. Make triplicate injections of each gas, and then calculate the average response factor (area/ppm C) for each gas, as well as the overall mean of the response factor values. Record the overall mean of the response factor values as the CO_2 calibration response factor (RF_{CO2}). The RF_{CO2} must be within 10 percent of the RF_{NMO}.

10.1.2.4 System Performance Check. Check the column separation and overall performance of the analyzer by making triplicate injections of the calibration gases listed in Section 7.4.4. The analyzer performance is acceptable if the measured NMO value for each gas (average of triplicate injections) is within 5 percent of the expected value.

10.2 NMO Analyzer Daily Calibration. The following calibration procedures shall be performed before and immediately after the analysis of each set of samples, or on a daily basis, whichever is more stringent:

10.2.1 CO_2 Response Factor. Inject triplicate samples of the high level CO_2 calibration gas (Section 7.4.3), and calculate the average response factor. The system operation is adequate if the calculated response factor is within 5 percent of the RF_{CO2} calculated during the initial performance test (Section 10.1.2.3). Use the daily response factor (DRF_{CO2}) for analyzer calibration and the calculation of measured CO_2 concentrations in the ICV samples.

10.2.2 NMO Response Factors. Inject triplicate samples of the mixed propane calibration cylinder gas (Section 7.4.4.1), and calculate the average NMO response factor. The system operation is adequate if the calculated response factor is within 10 percent of the RF_{NMO} calculated during the initial performance test (Section 10.1.2.4). Use the daily response factor (DRF_{NMO}) for analyzer calibration and calculation of NMO concentrations in the sample tanks.

10.3 Sample Tank and ICV Volume. The volume of the gas sampling tanks used must be determined. Determine the tank and ICV volumes by weighing them empty and then filled with deionized distilled water; weigh to the nearest 5 g, and record the results. Alternatively, measure the volume of water used to fill them to the nearest 5 ml.

11.0 Analytical Procedure

11.1 Condensate Recovery. See Figure 25–9. Set the carrier gas flow rate, and heat the catalyst to its operating temperature to condition the apparatus.

11.1.1 Daily Performance Checks. Each day before analyzing any samples, perform the following tests:

11.1.1.1 Leak-Check. With the carrier gas inlets and the sample recovery valve closed, install a clean condensate trap in the system, and evacuate the system to 10 mm Hg absolute pressure or less. Monitor the system pressure for 10 minutes. The

system is acceptable if the pressure change is less than 2 mm Hg.

11.1.1.2 System Background Test. Adjust the carrier gas and auxiliary oxygen flow rate to their normal values of 100 cc/min and 150 cc/min, respectively, with the sample recovery valve in vent position. Using a 10-ml syringe, withdraw a sample from the system effluent through the syringe port. Inject this sample into the NMO analyzer, and measure the CO_2 content. The system background is acceptable if the CO_2 concentration is less than 10 ppm.

11.1.1.3 Oxidation Catalyst Efficiency Check. Conduct a catalyst efficiency test as specified in Section 10.1.1.2. If the criterion of this test cannot be met, make the necessary repairs to the system before proceeding.

11.1.2 Condensate Trap CO_2 Purge and Sample Tank Pressurization.

11.1.2.1 After sampling is completed, the condensate trap will contain condensed water and organics and a small volume of sampled gas. This gas from the stack may contain a significant amount of CO_2 which must be removed from the condensate trap before the sample is recovered. This is accomplished by purging the condensate trap with zero air and collecting the purged gas in the original sample tank.

11.1.2.2 Begin with the sample tank and condensate trap from the test run to be analyzed. Set the four-port valve of the condensate recovery system in the CO_2 purge position as shown in Figure 25–9. With the sample tank valve closed, attach the sample tank to the sample recovery system. With the sample recovery valve in the vent position and the flow control valve fully open, evacuate the manometer or pressure gauge to the vacuum of the sample tank. Next, close the vacuum pump valve, open the sample tank valve, and record the tank pressure.

11.1.2.3 Attach the dry ice-cooled condensate trap to the recovery system, and initiate the purge by switching the sample recovery valve from vent to collect position. Adjust the flow control valve to maintain atmospheric pressure in the recovery system. Continue the purge until the CO_2 concentration of the trap effluent is less than 5 ppm. CO_2 concentration in the trap effluent should be measured by extracting syringe samples from the recovery system and analyzing the samples with the NMO analyzer. This procedure should be used only after the NDIR response has reached a minimum level. Using a 10-ml syringe, extract a sample from the syringe port prior to the NDIR, and inject this sample into the NMO analyzer.

11.1.2.4 After the completion of the CO_2 purge, use the carrier gas bypass valve to pressurize the sample tank to approximately 1,060 mm Hg absolute pressure with zero air.

11.1.3 Recovery of the Condensate Trap Sample (See Figure 25–10).

11.1.3.1 Attach the ICV to the sample recovery system. With the sample recovery valve in a closed position, between vent and collect, and the flow control and ICV valves fully open, evacuate the manometer or gauge, the connecting tubing, and the ICV to 10 mm Hg absolute pressure. Close the flow-control and vacuum pump valves.

11.1.3.2 Begin auxiliary oxygen flow to the oxidation catalyst at a rate of 150 cc/min, then switch the four-way valve to the trap recovery position and the sample recovery valve to collect position. The system should now be set up to operate as indicated in Figure 25–10. After the manometer or pressure gauge begins to register a slight positive pressure, open the flow control valve. Adjust the flow-control valve to maintain atmospheric pressure in the system within 10 percent.

11.1.3.3 Remove the condensate trap from the dry ice, and allow it to warm to ambient temperature while monitoring the NDIR response. If, after 5 minutes, the CO_2 concentration of the catalyst effluent is below 10,000 ppm, discontinue the auxiliary oxygen flow to the oxidation catalyst. Begin heating the trap by placing it in a furnace preheated to 200 °C (390 °F). Once heating has begun, carefully monitor the NDIR response to ensure that the catalyst effluent concentration does not exceed 50,000 ppm. Whenever the CO_2 concentration exceeds 50,000 ppm, supply auxiliary oxygen to the catalyst at the rate of 150 cc/min. Begin heating the tubing that connected the heated sample box to the condensate trap only after the CO_2 concentration falls below 10,000 ppm. This tubing may be heated in the same oven as the condensate trap or with an auxiliary heat source such as a heat gun. Heating temperature must not exceed 200 °C (390 °F). If a heat gun is used, heat the tubing slowly along its entire length from the upstream end to the downstream end, and repeat the pattern for a total of three times. Continue the recovery until the CO_2 concentration drops to less than 10 ppm as determined by syringe injection as described under the condensate trap CO_2 purge procedure (Section 11.1.2).

11.1.3.4 After the sample recovery is completed, use the carrier gas bypass valve to pressurize the ICV to approximately 1060 mm Hg absolute pressure with zero air.

11.2 Analysis. Once the initial performance test of the NMO analyzer has been successfully completed (see Section 10.1.2) and the daily CO_2 and NMO response factors have been determined (see Section 10.2), proceed with sample analysis as follows:

11.2.1 Operating Conditions. The carrier gas flow rate is 29.5 cc/min He and 2.2 cc/min O_2. The column oven is heated to 85 °C (185 °F). The order of elution for the sample from the column is CO, CH_4, CO_2, and NMO.

11.2.2 Analysis of Recovered Condensate Sample. Purge the sample loop with sample, and then inject the sample. Under the specified operating conditions, the CO_2 in the sample will elute in approximately 100 seconds. As soon as the detector response returns to baseline following the CO_2 peak, switch the carrier gas flow to backflush, and raise the column oven temperature to 195 °C (380 °F) as rapidly as possible. A rate of 30 °C/min (90 °F) has been shown to be adequate. Record the value obtained for the condensible organic material (C_{cm}) measured as CO_2 and any measured NMO. Return the column oven temperature to 85 °C (185 °F) in preparation for the next analysis. Analyze each sample in triplicate, and report the average C_{cm}.

11.2.3 Analysis of Sample Tank. Perform the analysis as described in Section 11.2.2, but record only the value measured for NMO (C_{tm}).

11.3 Audit Sample Analysis.

11.3.1 When the method is used to analyze samples to demonstrate compliance with a source emission regulation, an audit sample, if available, must be analyzed.

11.3.2 Concurrently analyze the audit sample and the compliance samples in the same manner to evaluate the technique of the analyst and the standards preparation.

11.3.3 The same analyst, analytical reagents, and analytical system must be used for the compliance samples and the audit sample. If this condition is met, duplicate auditing of subsequent compliance analyses for the same enforcement agency within a 30-day period is waived. An audit sample set may not be used to validate different sets of compliance samples under the jurisdiction of separate enforcement agencies, unless prior arrangements have been made with both enforcement agencies.

11.4 Audit Sample Results.

11.4.1 Calculate the audit sample concentrations and submit results using the instructions provided with the audit samples.

11.4.2 Report the results of the audit samples and the compliance determination samples along with their identification numbers, and the analyst's name to the responsible enforcement authority. Include this information with reports of any subsequent compliance analyses for the same enforcement authority during the 30-day period.

11.4.3 The concentrations of the audit samples obtained by the analyst must agree within 20 percent of the actual concentration. If the 20-percent specification is not met, reanalyze the compliance and audit samples, and include initial and reanalysis values in the test report.

11.4.4 Failure to meet the 20-percent specification may require retests until the audit problems are resolved. However, if the audit results do not affect the compliance or noncompliance status of the affected facility, the Administrator may waive the reanalysis requirement, further audits, or retests and accept the results of the compliance test. While steps are being taken to resolve audit analysis problems, the Administrator may also choose to use the data to determine the compliance or noncompliance status of the affected facility.

12.0 Data Analysis and Calculations

Carry out the calculations, retaining at least one extra significant figure beyond that of the acquired data. Round off figures after final calculations. All equations are written using absolute pressure; absolute pressures are determined by adding the measured barometric pressure to the measured gauge or manometer pressure.

12.1 Nomenclature.

C = TGNMO concentration of the effluent, ppm C equivalent.
C_c = Calculated condensible organic (condensate trap) concentration of the effluent, ppm C equivalent.
C_{cm} = Measured concentration (NMO analyzer) for the condensate trap ICV, ppm CO_2.
C_t = Calculated noncondensible organic concentration (sample tank) of the effluent, ppm C equivalent.
C_{tm} = Measured concentration (NMO analyzer) for the sample tank, ppm NMO.
F = Sampling flow rate, cc/min.
L = Volume of liquid injected, µl.
M = Molecular weight of the liquid injected, g/g-mole.
M_c = TGNMO mass concentration of the effluent, mg C/dsm³.
N = Carbon number of the liquid compound injected (N = 12 for decane, N = 6 for hexane).
n = Number of data points.
P_f = Final pressure of the intermediate collection vessel, mm Hg absolute.
P_b = Barometric pressure, cm Hg.
P_{ti} = Gas sample tank pressure before sampling, mm Hg absolute.
P_t = Gas sample tank pressure after sampling, but before pressurizing, mm Hg absolute.
P_{tf} = Final gas sample tank pressure after pressurizing, mm Hg absolute.
q = Total number of analyzer injections of intermediate collection vessel during analysis (where k = injection number, 1 * * * q).
r = Total number of analyzer injections of sample tank during analysis (where j = injection number, 1 * * * r).
r = Density of liquid injected, g/cc.
T_f = Final temperature of intermediate collection vessel, °K.
T_{ti} = Sample tank temperature before sampling, °K.
T_t = Sample tank temperature at completion of sampling, °K.
T_{tf} = Sample tank temperature after pressurizing, °K.
V = Sample tank volume, m³.
V_t = Sample train volume, cc.
V_v = Intermediate collection vessel volume, m³.
V_s = Gas volume sampled, dsm³.
x_i = Individual measurements.
x= Mean value.
ΔP = Allowable pressure change, cm Hg.
Θ = Leak-check period, min.

12.2 Allowable Pressure Change. For the pretest leak-check, calculate the allowable pressure change using Equation 25–1:

$$\Delta P = 0.01\ \frac{F P_b \Theta}{V_t} \qquad \text{Eq. 25-1}$$

12.3 Sample Volume. For each test run, calculate the gas volume sampled using Equation 25–2:

$$V_s = 0.3857\ V\left(\frac{P_t}{T_t} - \frac{P_{ti}}{T_{ti}}\right) \qquad \text{Eq. 25-2}$$

12.4 Noncondensible Organics. For each sample tank, determine the concentration of nonmethane organics (ppm C) using Equation 25–3:

$$C_t = \left(\frac{\dfrac{P_{tf}}{T_{tf}}}{\dfrac{P_t}{T_t} - \dfrac{P_{ti}}{T_{ti}}}\right)\left(\frac{1}{r}\sum_{j=1}^{r} C_{tm_j}\right) \qquad \text{Eq. 25-3}$$

12.5 Condensible Organics. For each condensate trap determine the concentration of organics (ppm C) using Equation 25–4:

$$C_c = 0.3857\,\frac{V_v P_f}{V_s T_f}\left(\frac{1}{q}\sum_{k=1}^{q} C_{cm_k}\right) \qquad \text{Eq. 25-4}$$

12.6 TGNMO Mass Concentration. Determine the TGNMO mass concentration as carbon for each test run, using Equation 25–5:

$$M_c = 0.4993\left(C_t + C_c\right) \qquad \text{Eq. 25-5}$$

12.7 Percent Recovery. Calculate the percent recovery for the liquid injections to the condensate recovery and conditioning system using Equation 25–6:

$$\text{Percent Recovery} = K\ \frac{M\,V_v P_t C_{cm}}{L\,P\,T_f N} \qquad \text{Eq. 25-6}$$

where K = 1.604 (°K)(g-mole)(%)/(mm Hg)(ml)(m³)(ppm).

12.8 Relative Standard Deviation. Use Equation 25–7 to calculate the relative standard deviation (RSD) of percent recovery and analyzer linearity.

$$RSD = \frac{100}{\bar{x}}\left[\frac{\sum_{i=1}^{n}\left(x_i - \bar{x}\right)^2}{n-1}\right]^{\frac{1}{2}} \qquad \text{Eq. 25-7}$$

13.0 Method Performance

13.1 Range. The minimum detectable limit of the method has been determined to be 50 parts per million by volume (ppm). No upper limit has been established.

14.0 Pollution Prevention [Reserved]

15.0 Waste Management [Reserved]

16.0 References

1. Salo, A.E., S. Witz, and R.D. MacPhee. Determination of Solvent Vapor Concentrations by Total Combustion Analysis: A Comparison of Infrared with Flame Ionization Detectors. Paper No. 75–33.2. (Presented at the 68th Annual Meeting of the Air Pollution Control Association. Boston, MA. June 15–20, 1975.) 14 p.

2. Salo, A.E., W.L. Oaks, and R.D. MacPhee. Measuring the Organic Carbon Content of Source Emissions for Air Pollution Control. Paper No. 74–190. (Presented at the 67th Annual Meeting of the Air Pollution Control Association. Denver, CO. June 9–13, 1974.) 25 p.

BILLING CODE 6560–50–P

17.0 Tables, Diagrams, Flowcharts, and Validation Data

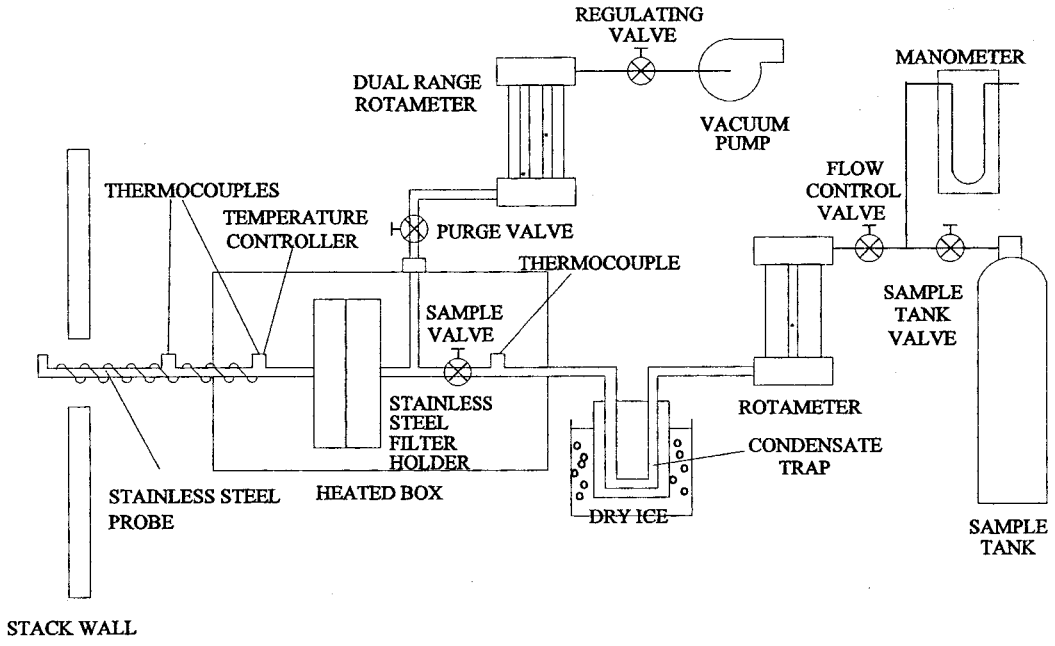

Figure 25-1. Sampling Train

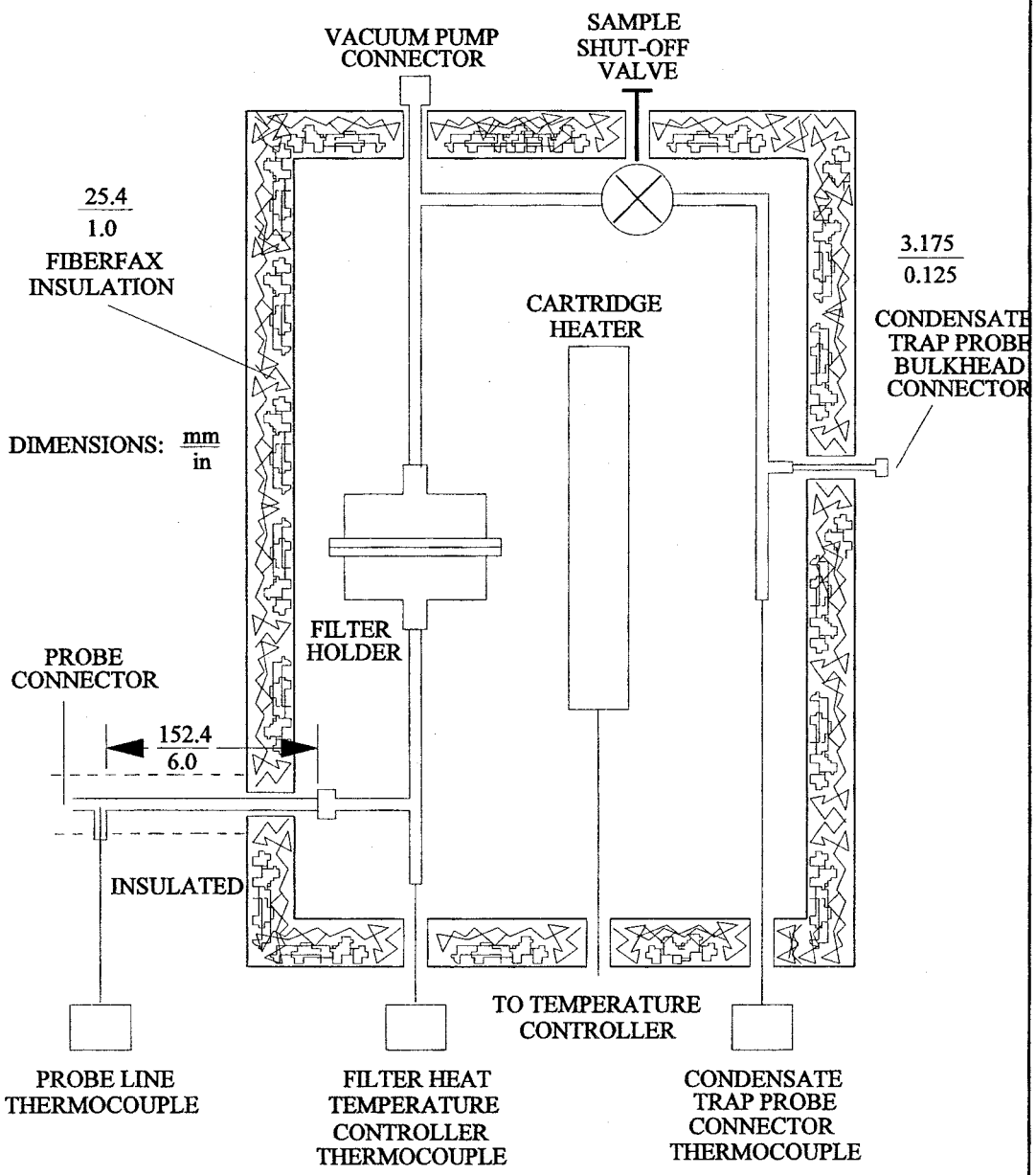

Figure 25-2. Out-of-stack Filter Box

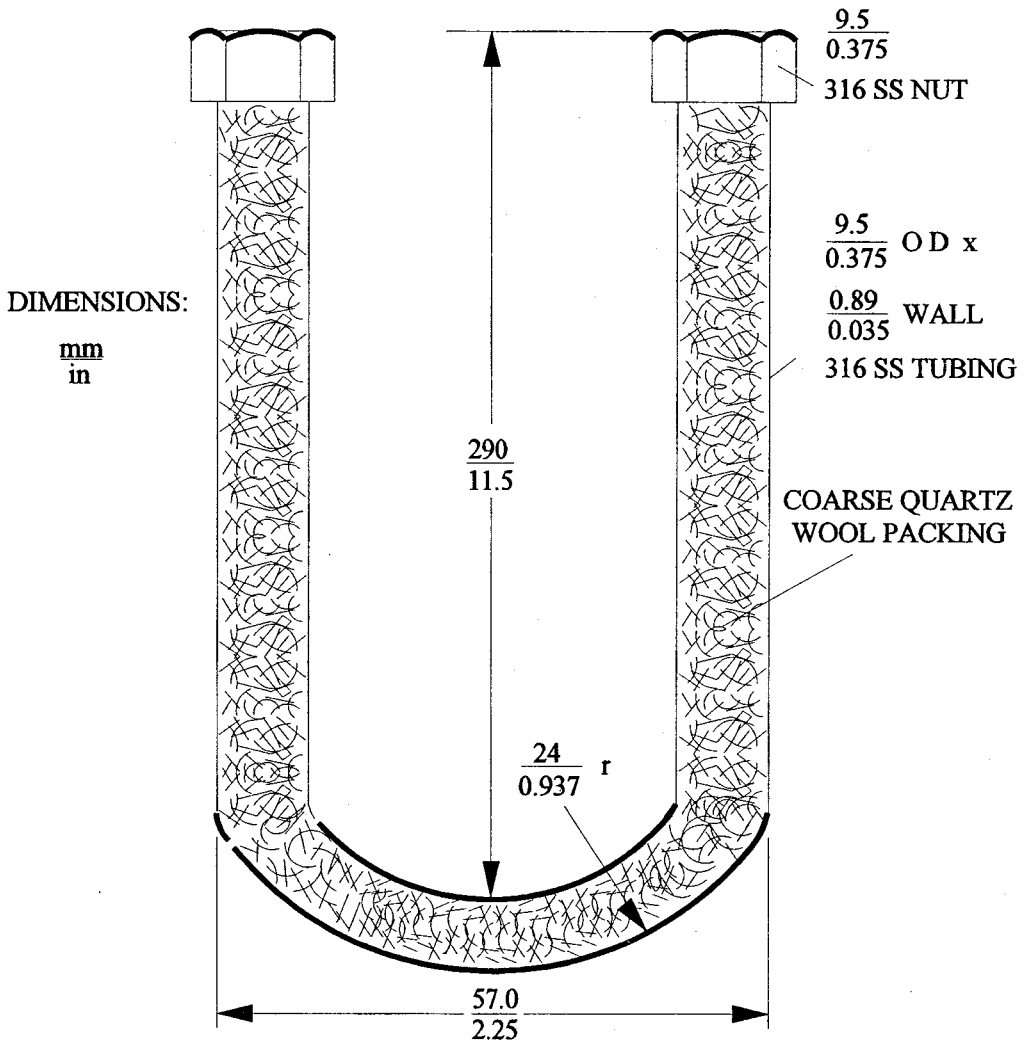

Figure 25-3. Condensate Trap

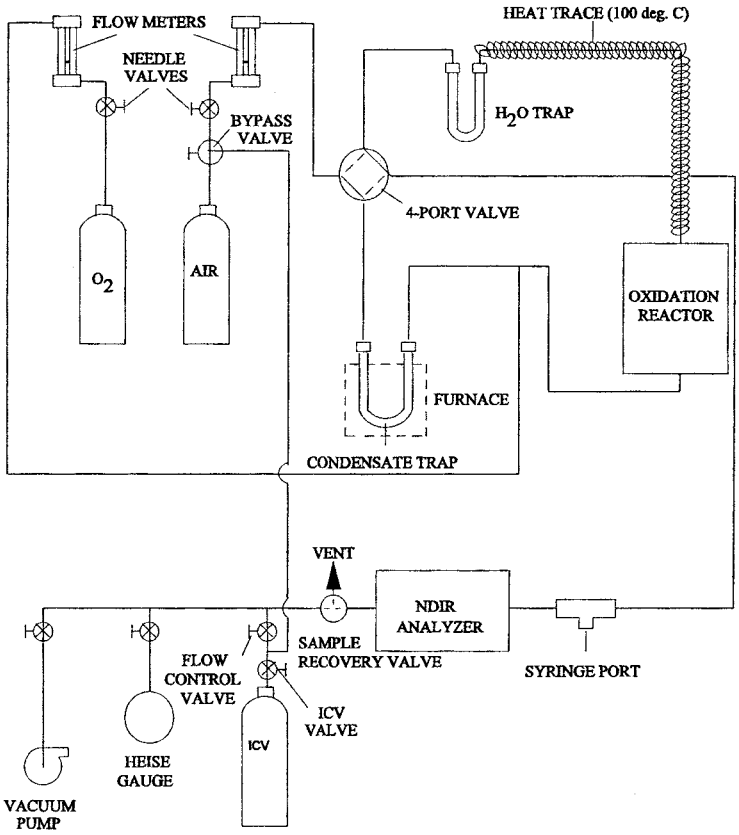

Figure 25-4. Condensate Recovery System

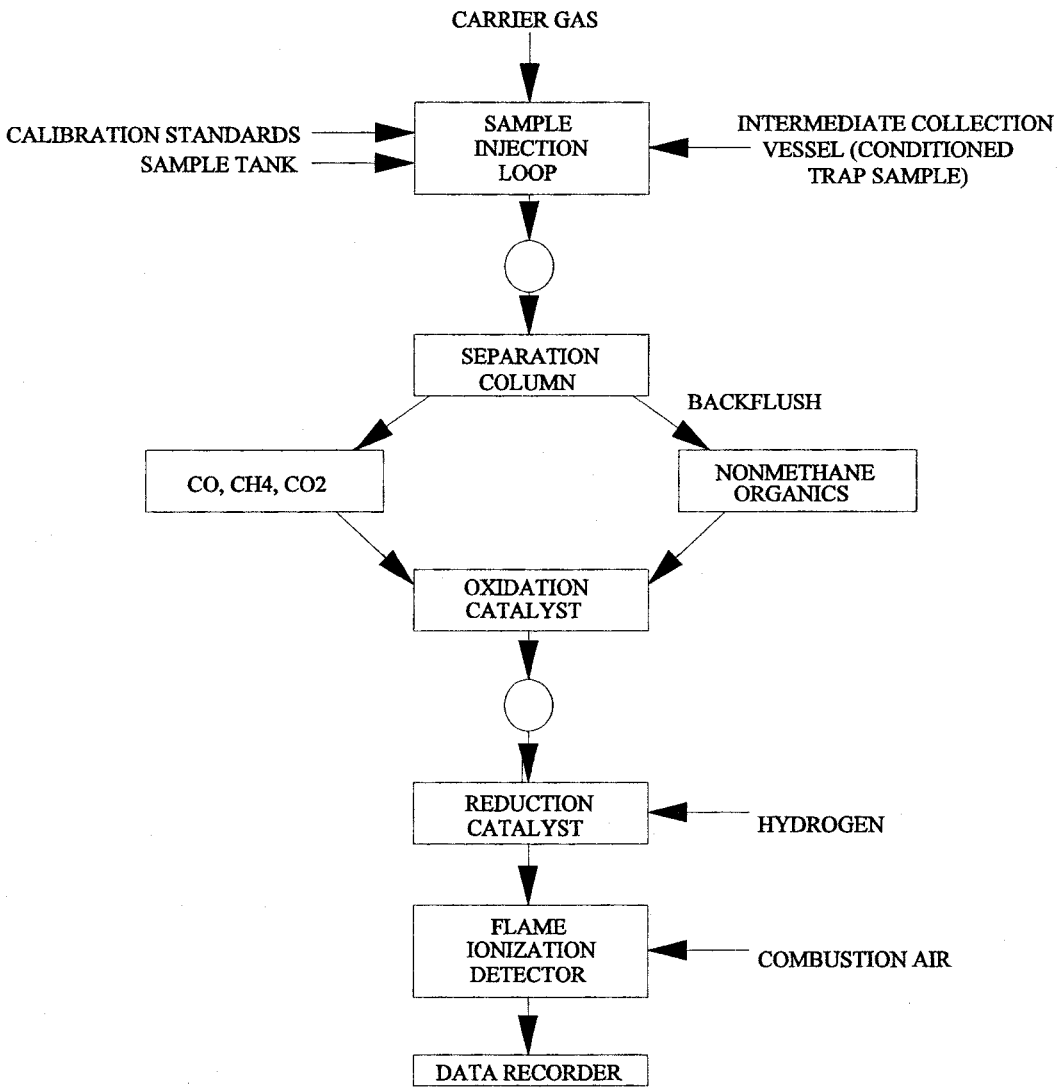

Figure 25-5. Simplified Schematic of Nonmethane Organic (NMO) Analyzer

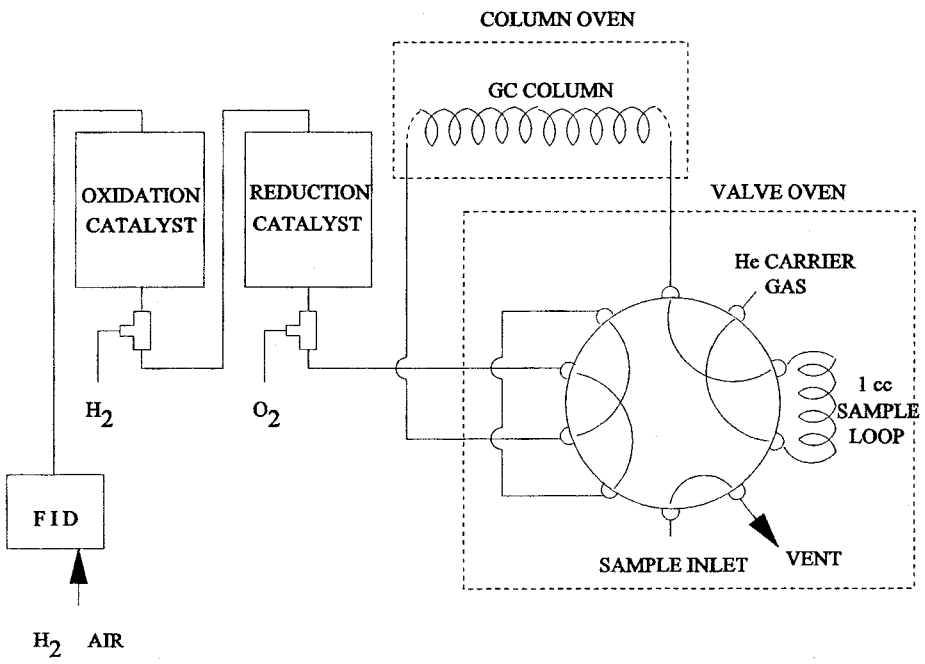

Figure 25-6. Nonmethane Organic Analyzer (NMO)

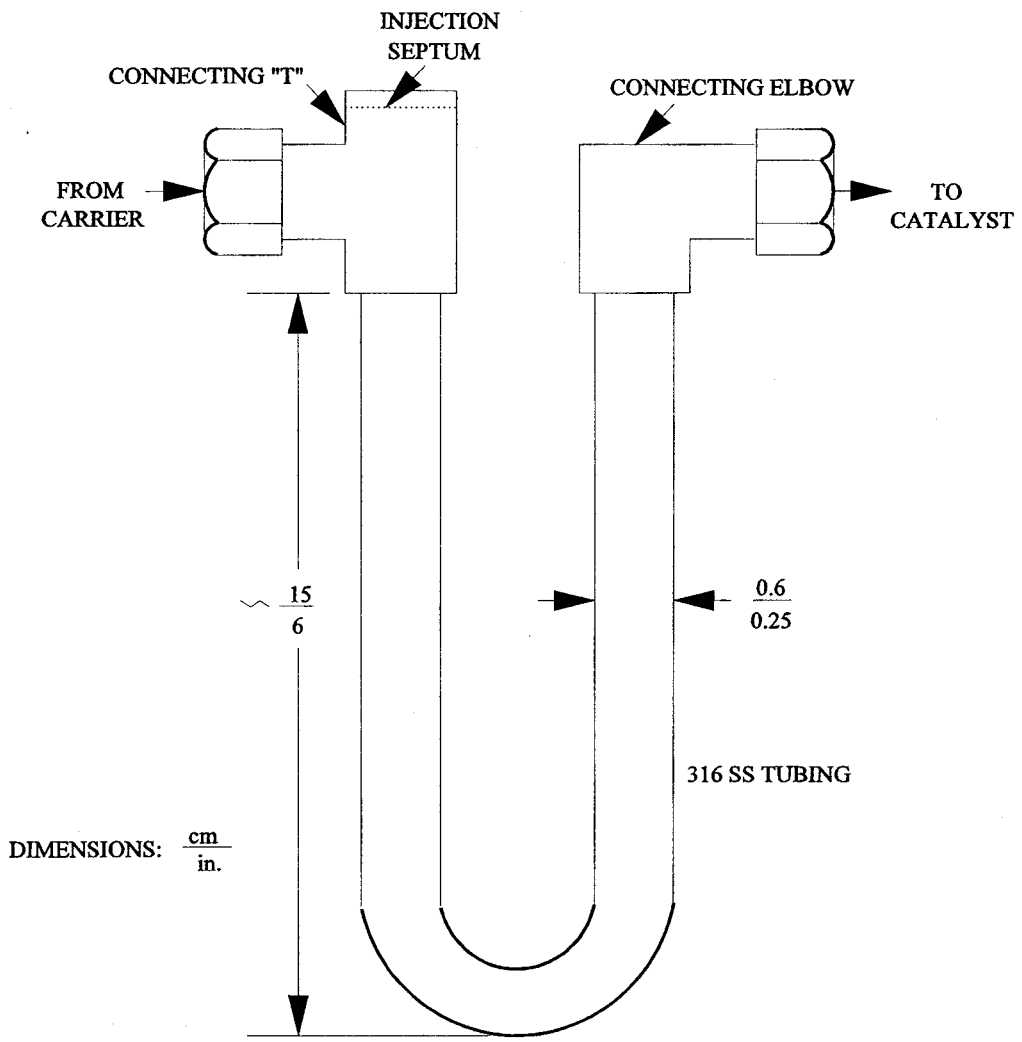

Figure 25-7. Liquid Sample Injection Unit

VOLATILE ORGANIC CARBON

FACILITY _____ SAMPLE LOCATION _____

LOCATION _____ OPERATOR _____

DATE _____ RUN NUMBER _____

TANK NUMBER _____ TRAP NUMBER _____ SAMPLE ID NUMBER _____

TANK VACUUM mm HG	TANK VACUUM cm Hg	BAROMETRIC PRESSURE mm Hg	AMBIENT TEMPERATURE ^{o}C
PRETEST (MANOMETER) _____	(GAUGE) _____		
POST-TEST (MANOMETER) _____	(GAUGE) _____		

LEAK RATE _____ cm Hg / 1.0 min.

PRETEST _____

TIME CLOCK/SAMPLE	VACUUM cm Hg	FLOWMETER SETTINGS	COMMENTS

Figure 25-8. Example Field Data Form

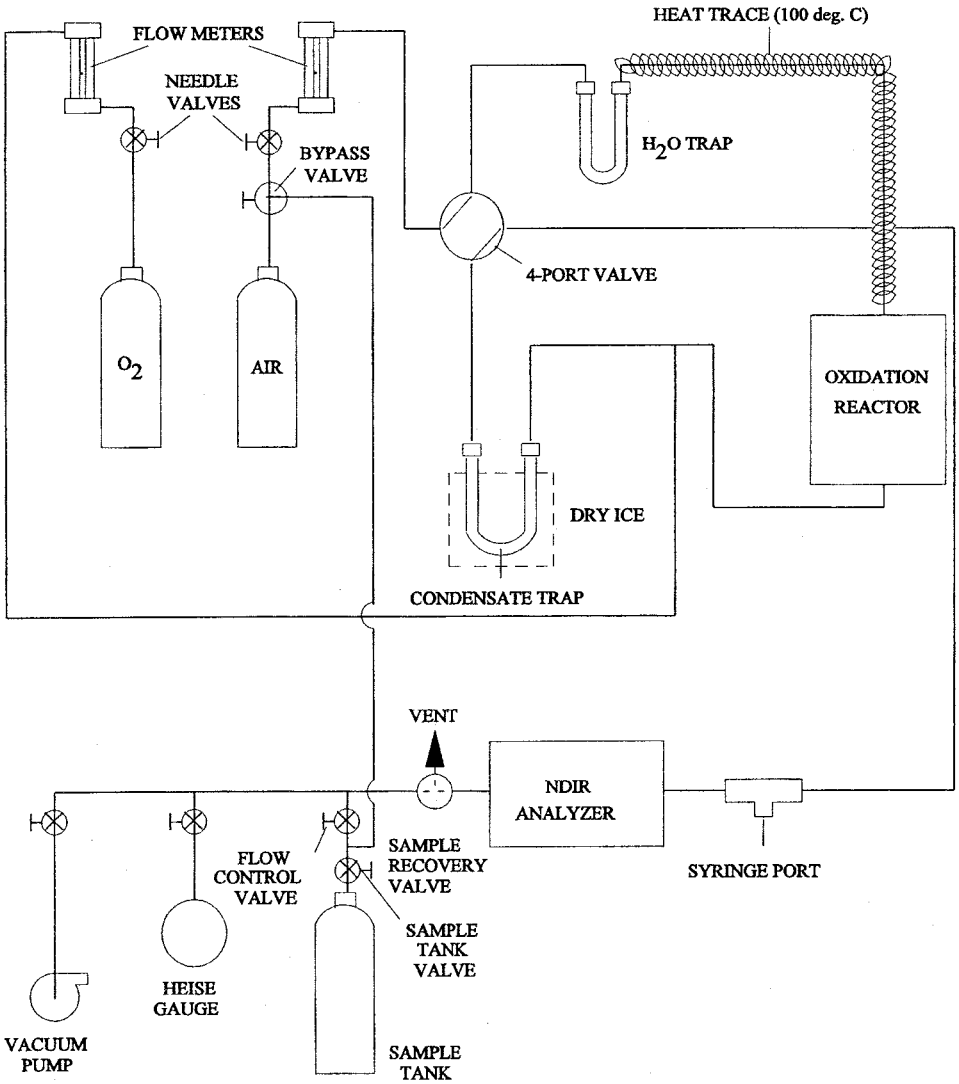

Figure 25-9. Condensate Recovery System, CO2 Purge

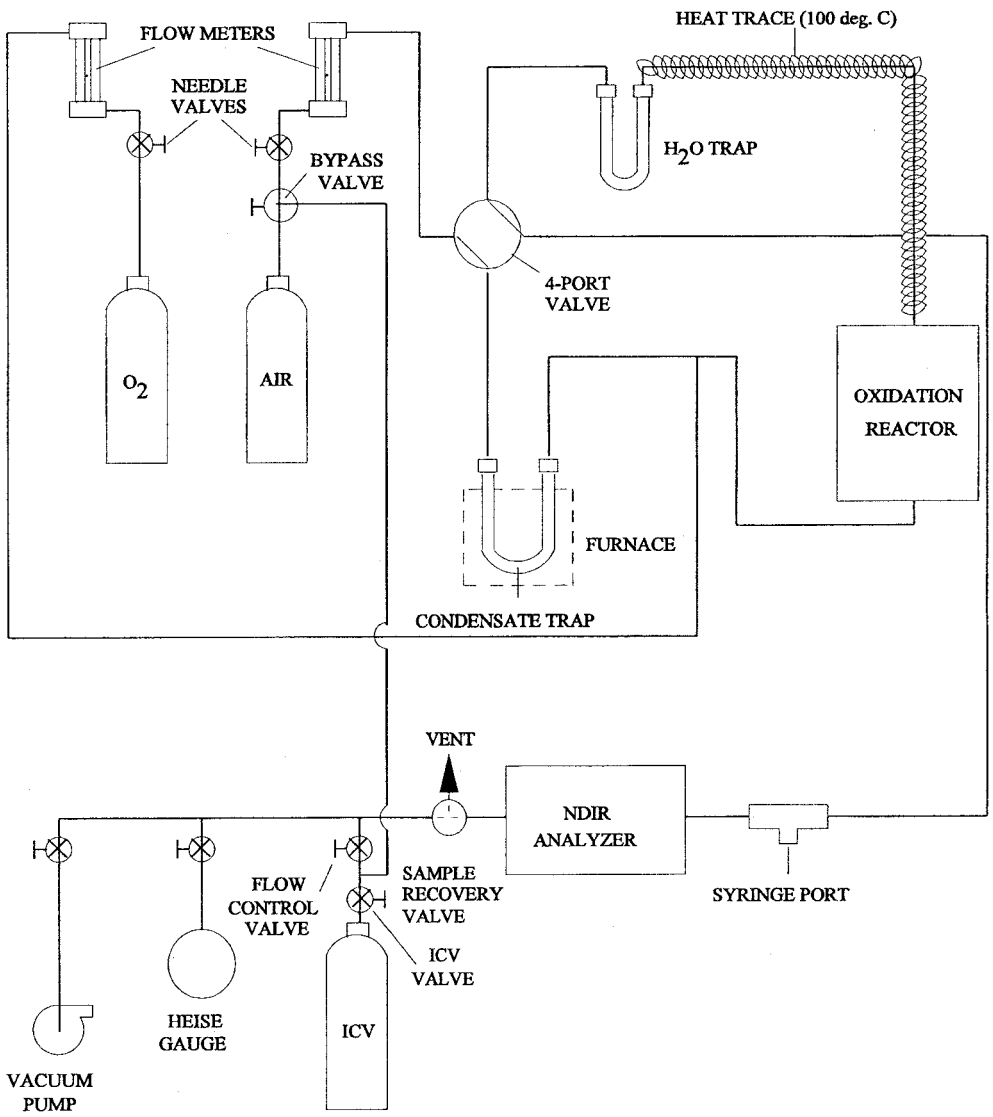

Figure 25-10. Condensate Recovery System, Collection of Trap Organics

BILLING CODE 6560–50–C

Method 25A—Determination of Total Gaseous Organic Concentration Using a Flame Ionization Analyzer

1.0 Scope and Application

1.1 Analytes.

Analyte	CAS No.	Sensitivity
Total Organic Compounds	N/A	< 2% of span.

1.2 Applicability. This method is applicable for the determination of total gaseous organic concentration of vapors consisting primarily of alkanes, alkenes, and/or arenes (aromatic hydrocarbons). The concentration is expressed in terms of propane (or other appropriate organic calibration gas) or in terms of carbon.

1.3 Data Quality Objectives. Adherence to the requirements of this method will enhance the quality of the data obtained from air pollutant sampling methods.

2.0 Summary of Method

2.1 A gas sample is extracted from the source through a heated sample line and glass fiber filter to a flame ionization analyzer (FIA). Results are reported as volume concentration equivalents of the calibration gas or as carbon equivalents.

3.0 Definitions

3.1 *Calibration drift* means the difference in the measurement system response to a mid-level calibration gas before and after a stated period of operation during which no unscheduled maintenance, repair, or adjustment took place.

3.2 *Calibration error* means the difference between the gas concentration indicated by the measurement system and the know concentration of the calibration gas.

3.3 *Calibration gas* means a known concentration of a gas in an appropriate diluent gas.

3.4 *Measurement system* means the total equipment required for the determination of the gas concentration. The system consists of the following major subsystems:

3.4.1 *Sample interface* means that portion of a system used for one or more of the following: sample acquisition, sample transportation, sample conditioning, or protection of the analyzer(s) from the effects of the stack effluent.

3.4.2 *Organic analyzer* means that portion of the measurement system that senses the gas to be measured and generates an output proportional to its concentration.

3.5 *Response time* means the time interval from a step change in pollutant concentration at the inlet to the emission measurement system to the time at which 95 percent of the corresponding final value is reached as displayed on the recorder.

3.6 *Span Value* means the upper limit of a gas concentration measurement range that is specified for affected source categories in the applicable part of the regulations. The span value is established in the applicable regulation and is usually 1.5 to 2.5 times the applicable emission limit. If no span value is provided, use a span value equivalent to 1.5 to 2.5 times the expected concentration. For convenience, the span value should correspond to 100 percent of the recorder scale.

3.7 *Zero drift* means the difference in the measurement system response to a zero level calibration gas before or after a stated period of operation during which no unscheduled maintenance, repair, or adjustment took place.

4.0 Interferences [Reserved]

5.0 Safety

5.1 Disclaimer. This method may involve hazardous materials, operations, and equipment. This test method may not address all of the safety problems associated with its use. It is the responsibility of the user of this test method to establish appropriate safety and health practices and determine the applicability of regulatory limitations prior to performing this test method. The analyzer users manual should be consulted for specific precautions to be taken with regard to the analytical procedure.

5.2 Explosive Atmosphere. This method is often applied in highly explosive areas. Caution and care should be exercised in choice of equipment and installation.

6.0 Equipment and Supplies

6.1 Measurement System. Any measurement system for total organic concentration that meets the specifications of this method. A schematic of an acceptable measurement system is shown in Figure 25A–1. All sampling components leading to the analyzer shall be heated ≥ 110 °C (220 °F) throughout the sampling period, unless safety reasons are cited (Section 5.2) The essential components of the measurement system are described below:

6.1.1 Organic Concentration Analyzer. A flame ionization analyzer (FIA) capable of meeting or exceeding the specifications of this method. The flame ionization detector block shall be heated >120 °C (250 °F).

6.1.2 Sample Probe. Stainless steel, or equivalent, three-hole rake type. Sample holes shall be 4 mm (0.16-in.) in diameter or smaller and located at 16.7, 50, and 83.3 percent of the equivalent stack diameter. Alternatively, a single opening probe may be used so that a gas sample is collected from the centrally located 10 percent area of the stack cross-section.

6.1.3 Heated Sample Line. Stainless steel or Teflon'' tubing to transport the sample gas to the analyzer. The sample line should be heated (≥110 °C) to prevent any condensation.

6.1.4 Calibration Valve Assembly. A three-way valve assembly to direct the zero and calibration gases to the analyzers is recommended. Other methods, such as quick-connect lines, to route calibration gas to the analyzers are applicable.

6.1.5 Particulate Filter. An in-stack or an out-of-stack glass fiber filter is recommended if exhaust gas particulate loading is significant. An out-of-stack filter should be heated to prevent any condensation.

6.1.6 Recorder. A strip-chart recorder, analog computer, or digital recorder for recording measurement data. The minimum data recording requirement is one measurement value per minute.

7.0 Reagents and Standards

7.1 Calibration Gases. The calibration gases for the gas analyzer shall be propane in air or propane in nitrogen. Alternatively, organic compounds other than propane can be used; the appropriate corrections for response factor must be made. Calibration gases shall be prepared in accordance with the procedure listed in Citation 2 of Section 16. Additionally, the manufacturer of the cylinder should provide a recommended shelf life for each calibration gas cylinder over which the concentration does not change more than ± 2 percent from the certified

value. For calibration gas values not generally available (*i.e.,* organics between 1 and 10 percent by volume), alternative methods for preparing calibration gas mixtures, such as dilution systems (Test Method 205, 40 CFR Part 51, Appendix M), may be used with prior approval of the Administrator.

7.1.1 Fuel. A 40 percent H_2/60 percent N_2 gas mixture is recommended to avoid an oxygen synergism effect that reportedly occurs when oxygen concentration varies significantly from a mean value.

7.1.2 Zero Gas. High purity air with less than 0.1 part per million by volume (ppmv) of organic material (propane or carbon equivalent) or less than 0.1 percent of the span value, whichever is greater.

7.1.3 Low-level Calibration Gas. An organic calibration gas with a concentration equivalent to 25 to 35 percent of the applicable span value.

7.1.4 Mid-level Calibration Gas. An organic calibration gas with a concentration equivalent to 45 to 55 percent of the applicable span value.

7.1.5 High-level Calibration Gas. An organic calibration gas with a concentration equivalent to 80 to 90 percent of the applicable span value.

8.0 Sample Collection, Preservation, Storage, and Transport

8.1 Selection of Sampling Site. The location of the sampling site is generally specified by the applicable regulation or purpose of the test (*i.e.,* exhaust stack, inlet line, etc.). The sample port shall be located to meet the testing requirements of Method 1.

8.2 Location of Sample Probe. Install the sample probe so that the probe is centrally located in the stack, pipe, or duct and is sealed tightly at the stack port connection.

8.3 Measurement System Preparation. Prior to the emission test, assemble the measurement system by following the manufacturer's written instructions for preparing sample interface and the organic analyzer. Make the system operable (Section 10.1).

8.4 Calibration Error Test. Immediately prior to the test series (within 2 hours of the start of the test), introduce zero gas and high-level calibration gas at the calibration valve assembly. Adjust the analyzer output to the appropriate levels, if necessary. Calculate the predicted response for the low-level and mid-level gases based on a linear response line between the zero and high-level response. Then introduce low-level and mid-level calibration gases successively to the measurement system. Record the analyzer responses for low-level and mid-level calibration gases and determine the differences between the measurement system responses and the predicted responses. These differences must be less than 5 percent of the respective calibration gas value. If not, the measurement system is not acceptable and must be replaced or repaired prior to testing. No adjustments to the measurement system shall be conducted after the calibration and before the drift check (Section 8.6.2). If adjustments are necessary before the completion of the test series, perform the drift checks prior to the required adjustments and repeat the calibration following the adjustments. If multiple electronic ranges are to be used, each additional range must be checked with a mid-level calibration gas to verify the multiplication factor.

8.5 Response Time Test. Introduce zero gas into the measurement system at the calibration valve assembly. When the system output has stabilized, switch quickly to the high-level calibration gas. Record the time from the concentration change to the measurement system response equivalent to 95 percent of the step change. Repeat the test three times and average the results.

8.6 Emission Measurement Test Procedure.

8.6.1 Organic Measurement. Begin sampling at the start of the test period, recording time and any required process information as appropriate. In particulate, note on the recording chart, periods of process interruption or cyclic operation.

8.6.2 Drift Determination. Immediately following the completion of the test period and hourly during the test period, reintroduce the zero and mid-level calibration gases, one at a time, to the measurement system at the calibration valve assembly. (Make no adjustments to the measurement system until both the zero and calibration drift checks are made.) Record the analyzer response. If the drift values exceed the specified limits, invalidate the test results preceding the check and repeat the test following corrections to the measurement system. Alternatively, recalibrate the test measurement system as in Section 8.4 and report the results using both sets of calibration data (i.e., data determined prior to the test period and data determined following the test period).

Note: Note on the recording chart periods of process interruption or cyclic operation.

9.0 Quality Control

Method section	Quality control measure	Effect
8.4	Zero and calibration drift tests	Ensures that bias introduced by drift in the measurement system output during the run is no greater than 3 percent of span.

10.0 Calibration and Standardization

10.1 FIA equipment can be calibrated for almost any range of total organic concentrations. For high concentrations of organics (> 1.0 percent by volume as propane), modifications to most commonly available analyzers are necessary. One accepted method of equipment modification is to decrease the size of the sample to the analyzer through the use of a smaller diameter sample capillary. Direct and continuous measurement of organic concentration is a necessary consideration when determining any modification design.

11.0 Analytical Procedure

The sample collection and analysis are concurrent for this method (see Section 8.0).

12.0 Calculations and Data Analysis

12.1 Determine the average organic concentration in terms of ppmv as propane or other calibration gas. The average shall be determined by integration of the output recording over the period specified in the applicable regulation. If results are required in terms of ppmv as carbon, adjust measured concentrations using Equation 25A–1.

$$C_c = K\,C_{meas} \qquad \text{Eq. 25A-1}$$

Where:

C_c = Organic concentration as carbon, ppmv.

C_{meas} = Organic concentration as measured, ppmv.

K = Carbon equivalent correction factor.

= 2 for ethane.

= 3 for propane.

= 4 for butane.

= Appropriate response factor for other organic calibration gases.

13.0 Method Performance

13.1 Measurement System Performance Specifications.

13.1.1 Zero Drift. Less than ±3 percent of the span value.

13.1.2 Calibration Drift. Less than ±3 percent of span value.

13.1.3 Calibration Error. Less than ±5 percent of the calibration gas value.

14.0 Pollution Prevention [Reserved]

15.0 Waste Management [Reserved]

16.0 References

1. Measurement of Volatile Organic Compounds—Guideline Series. U.S. Environmental Protection Agency. Research Triangle Park, NC. Publication No. EPA–450/2–78–041. June 1978. p. 46–54.

2. EPA Traceability Protocol for Assay and Certification of Gaseous Calibration Standards. U.S. Environmental Protection Agency, Quality Assurance and Technical Support Division. Research Triangle Park, N.C. September 1993.

3. Gasoline Vapor Emission Laboratory Evaluation—Part 2. U.S. Environmental Protection Agency, Office of Air Quality Planning and Standards. Research Triangle Park, NC. EMB Report No. 75–GAS–6. August 1975.

BILLING CODE 6560—50—P

17.0 Tables, Diagrams, Flowcharts, and Validation Data

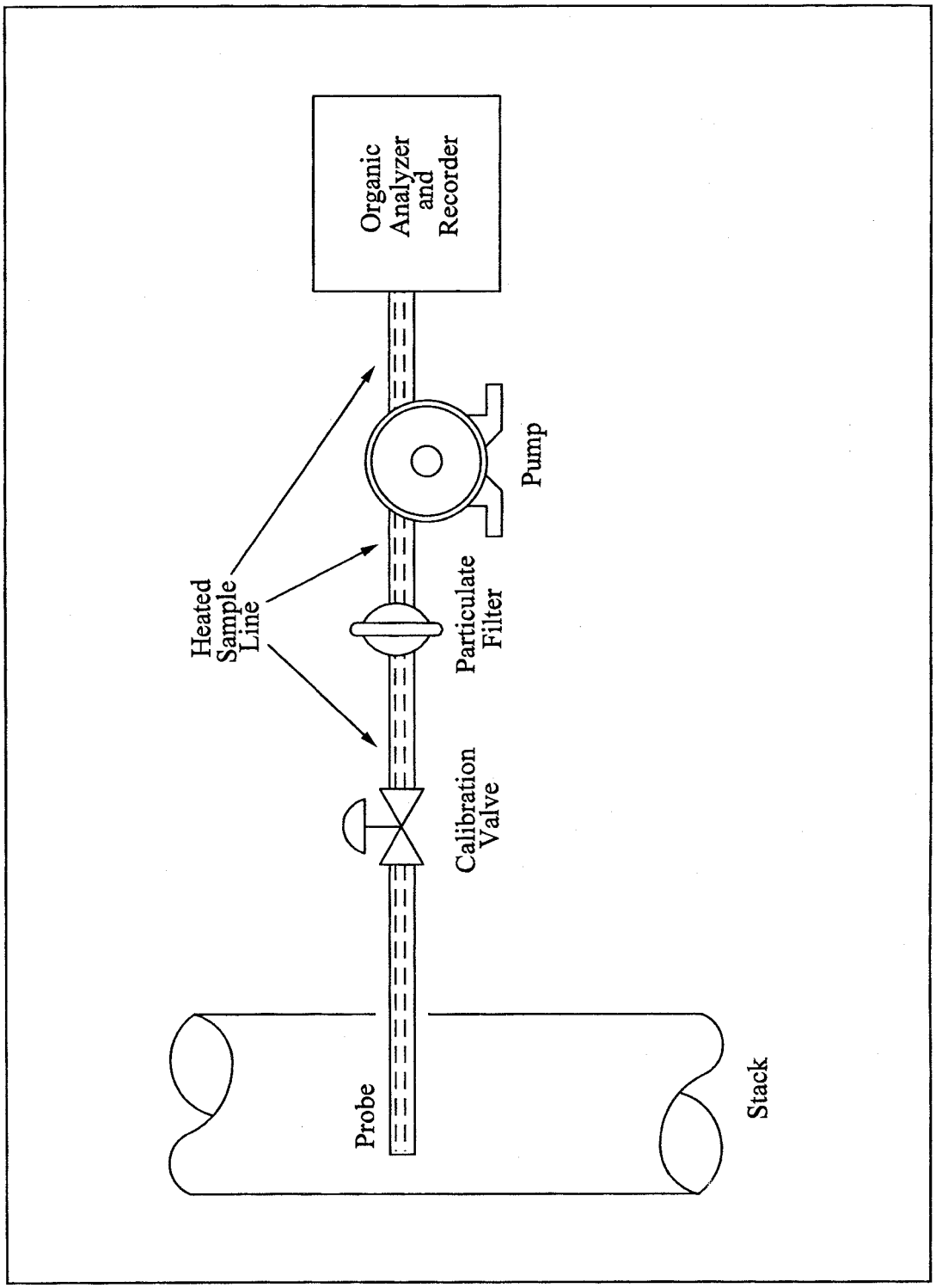

Figure 25A-1. Organic Concentration Measurement System.

BILLING CODE 6560—50—C

Method 25B—Determination of Total Gaseous Organic Concentration Using a Nondispersive Infrared Analyzer

NOTE: This method does not include all of the specifications (*e.g.*, equipment and supplies) and procedures (*e.g.*, sampling) essential to its performance. Some material is incorporated by reference from other methods in this part. Therefore, to obtain reliable results, persons using this method should have a thorough knowledge of at least the following additional test methods: Method 1, Method 6C, and Method 25A.

1.0 Scope and Application

1.1 Analytes.

Analyte	CAS No.	Sensitivity
Total Organic Compounds	N/A	< 2% of span.

1.2 Applicability. This method is applicable for the determination of total gaseous organic concentration of vapors consisting primarily of alkanes. Other organic materials may be measured using the general procedure in this method, the appropriate calibration gas, and an analyzer set to the appropriate absorption band.

1.3 Data Quality Objectives. Adherence to the requirements of this method will enhance the quality of the data obtained from air pollutant sampling methods.

2.0 Summary of Method

A gas sample is extracted from the source through a heated sample line, if necessary, and glass fiber filter to a nondispersive infrared analyzer (NDIR). Results are reported as volume concentration equivalents of the calibration gas or as carbon equivalents.

3.0 Definitions

Same as Method 25A, Section 3.0.

4.0 Interferences [Reserved]

5.0 Safety

5.1 Disclaimer. This method may involve hazardous materials, operations, and equipment. This test method may not address all of the safety problems associated with its use. It is the responsibility of the user of this test method to establish appropriate safety and health practices and determine the applicability of regulatory limitations prior to performing this test method. The analyzer users manual should be consulted for specific precautions to be taken with regard to the analytical procedure.

5.2 Explosive Atmosphere. This method is often applied in highly explosive areas. Caution and care should be exercised in choice of equipment and installation.

6.0 Equipment and Supplies

Same as Method 25A, Section 6.0, with the exception of the following:

6.1 Organic Concentration Analyzer. A nondispersive infrared analyzer designed to measure alkane organics and capable of meeting or exceeding the specifications in this method.

7.0 Reagents and Standards

Same as Method 25A, Section 7.1. No fuel gas is required for an NDIR.

8.0 Sample Collection, Preservation, Storage, and Transport

Same as Method 25A, Section 8.0.

9.0 Quality Control

Same as Method 25A, Section 9.0.

10.0 Calibration and Standardization

Same as Method 25A, Section 10.0.

11.0 Analytical Procedure

The sample collection and analysis are concurrent for this method (see Section 8.0).

12.0 Calculations and Data Analysis

Same as Method 25A, Section 12.0.

13.0 Method Performance [Reserved]

14.0 Pollution Prevention [Reserved]

15.0 Waste Management [Reserved]

16.0 References

Same as Method 25A, Section 16.0.

17.0 Tables, Diagrams, Flowcharts, and Validation Data [Reserved]

Method 25C—Determination of Nonmethane Organic Compounds (NMOC) in Landfill Gases

Note: This method does not include all of the specifications (*e.g.*, equipment and supplies) and procedures (*e.g.*, sampling and analytical) essential to its performance. Some material is incorporated by reference from other methods in this part. Therefore, to obtain reliable results, persons using this method should also have a thorough knowledge of EPA Method 25.

1.0 Scope and Application

1.1 Analytes.

Analyte	CAS No.
Nonmethane organic compounds (NMOC).	No CAS number assigned.

1.2 Applicability. This method is applicable to the sampling and measurement of NMOC as carbon in landfill gases (LFG).

1.3 Data Quality Objectives. Adherence to the requirements of this method will enhance the quality of the data obtained from air pollutant sampling methods.

2.0 Summary of Method

2.1 A sample probe that has been perforated at one end is driven or augured to a depth of 0.9 m (3 ft) below the bottom of the landfill cover. A sample of the landfill gas is extracted with an evacuated cylinder. The NMOC content of the gas is determined by injecting a portion of the gas into a gas chromatographic column to separate the NMOC from carbon monoxide (CO), carbon dioxide (CO_2), and methane (CH_4); the NMOC are oxidized to CO_2, reduced to CH_4, and measured by a flame ionization detector (FID). In this manner, the variable response of the FID associated with different types of organics is eliminated.

3.0 Definitions. [Reserved]

4.0 Interferences. [Reserved]

5.0 Safety

5.1 Since this method is complex, only experienced personnel should perform this test. LFG contains methane, therefore explosive mixtures may exist on or near the landfill. It is advisable to take appropriate safety precautions when testing landfills, such as refraining from smoking and installing explosion-proof equipment.

6.0 Equipment and Supplies

6.1 Sample Probe. Stainless steel, with the bottom third perforated. The sample probe must be capped at the bottom and must have a threaded cap with a sampling attachment at the top.

The sample probe must be long enough to go through and extend no less than 0.9 m (3 ft) below the landfill cover. If the sample probe is to be driven into the landfill, the bottom cap should be designed to facilitate driving the probe into the landfill.

6.2 Sampling Train.

6.2.1 Rotameter with Flow Control Valve. Capable of measuring a sample flow rate of 100 ± 10 ml/min. The control valve must be made of stainless steel.

6.2.2 Sampling Valve. Stainless steel.

6.2.3 Pressure Gauge. U-tube mercury manometer, or equivalent, capable of measuring pressure to within 1 mm Hg (0.5 in H_2O) in the range of 0 to 1,100 mm Hg (0 to 590 in H_2O).

6.2.4 Sample Tank. Stainless steel or aluminum cylinder, equipped with a stainless steel sample tank valve.

6.3 Vacuum Pump. Capable of evacuating to an absolute pressure of 10 mm Hg (5.4 in H_2O).

6.4 Purging Pump. Portable, explosion proof, and suitable for sampling NMOC.

6.5 Pilot Probe Procedure. The following are needed only if the tester chooses to use the procedure described in Section 8.2.1.

6.5.1 Pilot Probe. Tubing of sufficient strength to withstand being driven into the landfill by a post driver and an outside diameter of at least 6 mm (0.25 in.) smaller than the sample probe. The pilot probe shall be capped on both ends and long enough to go through the landfill cover and extend no less than 0.9 m (3 ft) into the landfill.

6.5.2 Post Driver and Compressor. Capable of driving the pilot probe and the sampling probe into the landfill. The Kitty Hawk portable post driver has been found to be acceptable.

6.6 Auger Procedure. The following are needed only if the tester chooses to use the procedure described in Section 8.2.2.

6.6.1 Auger. Capable of drilling through the landfill cover and to a depth of no less than 0.9 m (3 ft) into the landfill.

6.6.2 Pea Gravel.

6.6.3 Bentonite.

6.7 NMOC Analyzer, Barometer, Thermometer, and Syringes. Same as in Sections 6.3.1, 6.3.2, 6.33, and 6.2.10, respectively, of Method 25.

7.0 Reagents and Standards

7.1 NMOC Analysis. Same as in Method 25, Section 7.2.

7.2 Calibration. Same as in Method 25, Section 7.4, except omit Section 7.4.3.

7.3 Quality Assurance Audit Samples.

7.3.1 It is recommended, but not required, that a performance audit sample be analyzed in conjunction with the field samples. The audit sample should be in a suitable sample matrix at a concentration similar to the actual field samples.

7.3.2 When making compliance determinations, and upon availability, audit samples may be obtained from the appropriate EPA Regional Office or from the responsible enforcement authority and analyzed in conjunction with the field samples.

Note: The responsible enforcement authority should be notified at least 30 days prior to the test date to allow sufficient time for sample delivery.

8.0 Sample Collection, Preservation, Storage, and Transport

8.1 Sample Tank Evacuation and Leak-Check. Conduct the sample tank evacuation and leak-check either in the laboratory or the field. Connect the pressure gauge and sampling valve to the sample tank. Evacuate the sample tank to 10 mm Hg (5.4 in H_2O) absolute pressure or less. Close the sampling valve, and allow the tank to sit for 30 minutes. The tank is acceptable if no change more than ± 2 mm is noted. Include the results of the leak-check in the test report.

8.2 Sample Probe Installation. The tester may use the procedure in Section 8.2.1 or 8.2.2.

8.2.1 Pilot Probe Procedure. Use the post driver to drive the pilot probe at least 0.9 m (3 ft) below the landfill cover. Alternative procedures to drive the probe into the landfill may be used subject to the approval of the Administrator's designated representative.

8.2.1.1 Remove the pilot probe and drive the sample probe into the hole left by the pilot probe. The sample probe shall extend at least 0.9 m (3 ft) below the landfill cover and shall protrude about 0.3 m (1 ft) above the landfill cover. Seal around the sampling probe with bentonite and cap the sampling probe with the sampling probe cap.

8.2.2 Auger Procedure. Use an auger to drill a hole to at least 0.9 m (3 ft) below the landfill cover. Place the sample probe in the hole and backfill with pea gravel to a level 0.6 m (2 ft) from the surface. The sample probe shall protrude at least 0.3 m (1 ft) above the landfill cover. Seal the remaining area around the probe with bentonite. Allow 24 hours for the landfill gases to equilibrate inside the augured probe before sampling.

8.3 Sample Train Assembly. Just before assembling the sample train, measure the sample tank vacuum using the pressure gauge. Record the vacuum, the ambient temperature, and the barometric pressure at this time. Assemble the sampling probe purging system as shown in Figure 25C–1.

8.4 Sampling Procedure. Open the sampling valve and use the purge pump and the flow control valve to evacuate at least two sample probe volumes from the system at a flow rate of 500 ml/min or less. Close the sampling valve and replace the purge pump with the sample tank apparatus as shown in Figure 25C–2. Open the sampling valve and the sample tank valve and, using the flow control valve, sample at a flow rate of 500 ml/min or less until either a constant flow rate can no longer be maintained because of reduced sample tank vacuum or the appropriate composite volume is attained. Disconnect the sampling tank apparatus and pressurize the sample cylinder to approximately 1,060 mm Hg (567 in. H_2O) absolute pressure with helium, and record the final pressure. Alternatively, the sample tank may be pressurized in the lab.

8.4.1 The following restrictions apply to compositing samples from different probe sites into a single cylinder: (1) Individual composite samples per cylinder must be of equal volume; this must be verified by recording the flow rate, sampling time, vacuum readings, or other appropriate volume measuring data, (2) individual composite samples must have a minimum volume of 1 liter unless data is provided showing smaller volumes can be accurately measured, and (3) composite samples must not be collected using the final cylinder vacuum as it diminishes to ambient pressure.

8.4.2 Use Method 3C to determine the percent N_2 in each cylinder. The presence of N_2 indicates either infiltration of ambient air into the landfill gas sample or an inappropriate testing site has been chosen where anaerobic decomposition has not begun. The landfill gas sample is acceptable if the concentration of N_2 is less than 20 percent. Alternatively, Method 3C may be used to determine the oxygen content of each cylinder as an air infiltration test. With this option, the oxygen content of each cylinder must be less than 5 percent.

9.0 Quality Control

9.1 Miscellaneous Quality Control Measures.

Section	Quality control measure	Effect
8.4.1	Verify that landfill gas sample contains less than 20 percent N_2 or 5 percent O_2.	Ensures that ambient air was not drawn into the landfill gas sample.
10.1, 10.2	NMOC analyzer initial and daily performance checks.	Ensures precision of analytical results.
11.1.4	Audit Sample Analyses	Evaluate analytical technique and instrument calibration.

10.0 Calibration and Standardization

Note: Maintain a record of performance of each item.

10.1 Initial NMOC Analyzer Performance Test. Same as in Method 25, Section 10.1, except omit the linearity checks for CO_2 standards.

10.2 NMOC Analyzer Daily Calibration.

10.2.1 NMOC Response Factors. Same as in Method 25, Section 10.2.2.

10.3 Sample Tank Volume. The volume of the gas sampling tanks must be determined. Determine the tank volumes by weighing them empty and then filled with deionized water; weigh to the nearest 5 g, and record the results. Alternatively, measure the volume of water used to fill them to the nearest 5 ml.

11.0 Analytical Procedures

11.1 The oxidation, reduction, and measurement of NMOC's is similar to Method 25. Before putting the NMOC analyzer into routine operation, conduct an initial performance test. Start the analyzer, and perform all the necessary functions in order to put the analyzer into proper working order. Conduct the performance test according to the procedures established in Section 10.1. Once the performance test has been successfully completed and the NMOC calibration response factor has been determined, proceed with sample analysis as follows:

11.1.1 Daily Operations and Calibration Checks. Before and immediately after the analysis of each set of samples or on a daily basis (whichever occurs first), conduct a calibration test according to the procedures established in Section 10.2. If the criteria of the daily calibration test cannot be met, repeat the NMOC analyzer performance test (Section 10.1) before proceeding.

11.1.2 Operating Conditions. Same as in Method 25, Section 11.2.1.

11.1.3 Analysis of Sample Tank. Purge the sample loop with sample, and then inject the sample. Under the specified operating conditions, the CO_2 in the sample will elute in approximately 100 seconds. As soon as the detector response returns to baseline following the CO_2 peak, switch the carrier gas flow to backflush, and raise the column oven temperature to 195°C (383°F) as rapidly as possible. A rate of 30°C/min (54°F/min) has been shown to be adequate. Record the value obtained for any measured NMOC. Return the column oven temperature to 85°C (185°F) in preparation for the next analysis. Analyze each sample in triplicate, and report the average as C_{tm}.

11.2 Audit Sample Analysis. When the method is used to analyze samples to demonstrate compliance with a source emission regulation, an audit sample, if available, must be analyzed.

11.2.1 Concurrently analyze the audit sample and the compliance samples in the same manner to evaluate the technique of the analyst and the standards preparation.

11.2.2 The same analyst, analytical reagents, and analytical system must be used for the compliance samples and the audit sample. If this condition is met, duplicate auditing of subsequent compliance analyses for the same enforcement agency within a 30-day period is waived. An audit sample set may not be used to validate different sets of compliance samples under the jurisdiction of separate enforcement agencies, unless prior arrangements have been made with both enforcement agencies.

11.3 Audit Sample Results.

11.3.1 Calculate the audit sample concentrations and submit results using the instructions provided with the audit samples.

11.3.2 Report the results of the audit samples and the compliance determination samples along with their identification numbers, and the analyst's name to the responsible enforcement authority. Include this information with reports of any subsequent compliance analyses for the same enforcement authority during the 30-day period.

11.3.3 The concentrations of the audit samples obtained by the analyst must agree within 20 percent of the actual concentration. If the 20-percent specification is not met, reanalyze the compliance and audit samples, and include initial and reanalysis values in the test report.

11.3.4 Failure to meet the 20-percent specification may require retests until the audit problems are resolved. However, if the audit results do not affect the compliance or noncompliance status of the affected facility, the Administrator may waive the reanalysis requirement, further audits, or retests and accept the results of the compliance test. While steps are being taken to resolve audit analysis problems, the Administrator may also choose to use the data to determine the compliance or noncompliance status of the affected facility.

12.0 Data Analysis and Calculations

Note: All equations are written using absolute pressure; absolute pressures are determined by adding the measured barometric pressure to the measured gauge or manometer pressure.

12.1 Nomenclature.

B_w = Moisture content in the sample, fraction.
C_{N2} = Measured N_2 concentration, fraction.
C_t = Calculated NMOC concentration, ppmv C equivalent.
C_{tm} = Measured NMOC concentration, ppmv C equivalent.
P_b = Barometric pressure, mm Hg.
P_t = Gas sample tank pressure after sampling, but before pressurizing, mm Hg absolute.
P_{tf} = Final gas sample tank pressure after pressurizing, mm Hg absolute.
P_{ti} = Gas sample tank pressure after evacuation, mm Hg absolute.
P_w = Vapor pressure of H_2O (from Table 25C–1), mm Hg.
r = Total number of analyzer injections of sample tank during analysis (where j = injection number, 1 * * * r).
T_t = Sample tank temperature at completion of sampling, °K.
T_{ti} = Sample tank temperature before sampling, °K.
T_{tf} = Sample tank temperature after pressurizing, °K.

12.2 Water Correction. Use Table 25C–1 (Section 17.0), the LFG temperature, and barometric pressure at the sampling site to calculate B_w.

$$B_w = \frac{P_w}{P_b} \qquad \text{Eq. 25C-1}$$

12.3 NMOC Concentration. Use the following equation to calculate the concentration of NMOC for each sample tank.

$$C_t = \frac{\frac{P_{tf}}{T_{tf}}}{\frac{P_t}{T_t} - \frac{P_{ti}}{T_{ti}}} \quad \frac{1}{\left(1 - \frac{99}{78} C_{N_2}\right) - B_w} \sum_{j=1}^{r} C_{tm^{(j)}} \qquad \text{Eq. 25C-2}$$

13.0 Method Performance [Reserved]

14.0 Pollution Prevention [Reserved]

15.0 Waste Management [Reserved]

16.0 References

1. Salo, Albert E., Samuel Witz, and Robert D. MacPhee. Determination of Solvent Vapor Concentrations by Total Combustion Analysis: A Comparison of Infrared with Flame Ionization Detectors. Paper No. 75–33.2. (Presented at the 68th Annual Meeting of the Air Pollution Control Association. Boston, Massachusetts. June 15–20, 1975.) 14 p.

2. Salo, Albert E., William L. Oaks, and Robert D. MacPhee. Measuring the Organic Carbon Content of Source Emissions for Air Pollution Control. Paper No. 74–190. (Presented at the 67th Annual Meeting of the Air Pollution Control Association. Denver, Colorado. June 9–13, 1974.) 25 p.

BILLING CODE 6560–50–P

17.0 Tables, Diagrams, Flowcharts, and Validation Data

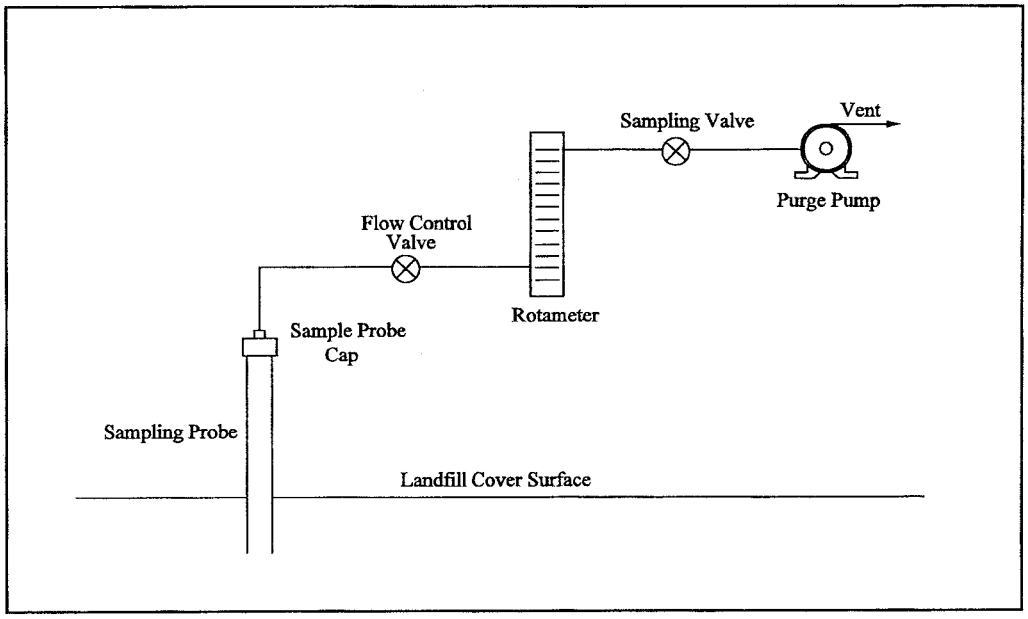

Figure 25C-1. Schematic of Sampling Probe Purging System

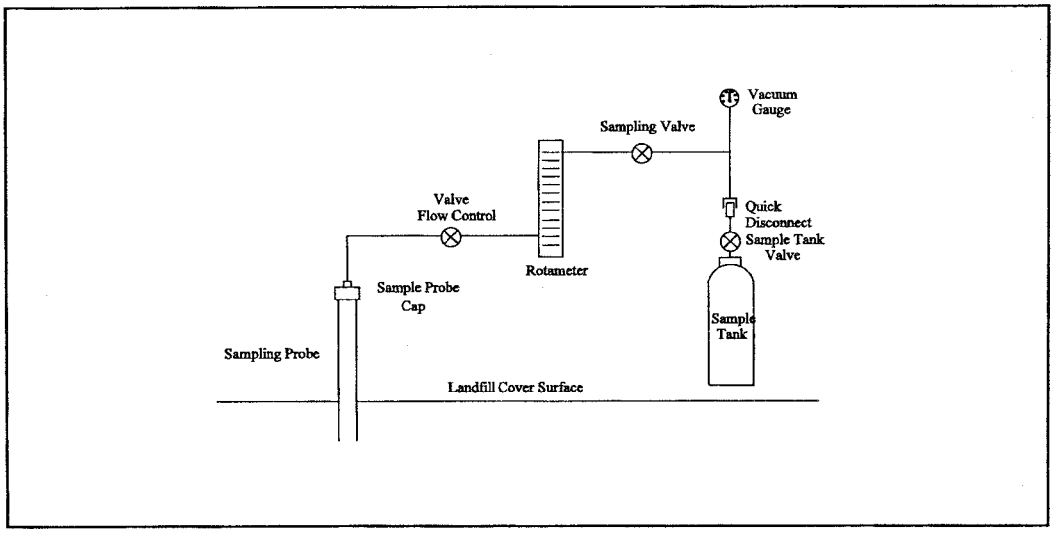

Figure 25C-2. Schematic of Sampling Train.

BILLING CODE 6560–50–C

TABLE 25C–1.—MOISTURE CORRECTION

Temperature, °C	Vapor Pressure of H_2O, mm Hg	Temperature, °C	Vapor Pressure of H_2O, mm Hg
4	6.1	18	15.5
6	7.0	20	17.5
8	8.0	22	19.8
10	9.2	24	22.4
12	10.5	26	25.2
14	12.0	28	28.3
16	13.6	30	31.8

Method 25D—Determination of the Volatile Organic Concentration of Waste Samples

Note: Performance of this method should not be attempted by persons unfamiliar with the operation of a flame ionization detector (FID) or an electrolytic conductivity detector (ELCD) because knowledge beyond the scope of this presentation is required.

1.0 Scope and Application

1.1 Analyte. Volatile Organic Compounds. No CAS No. assigned.

1.2 Applicability. This method is applicable for determining the volatile organic (VO) concentration of a waste sample.

2.0 Summary of Method

2.1 Principle. A sample of waste is obtained at a point which is most representative of the unexposed waste (where the waste has had minimum opportunity to volatilize to the atmosphere). The sample is suspended in an organic/aqueous matrix, then heated and purged with nitrogen for 30 min. in order to separate certain organic compounds. Part of the sample is analyzed for carbon concentration, as methane, with an FID, and part of the sample is analyzed for chlorine concentration, as chloride, with an ELCD. The VO concentration is the sum of the carbon and chlorine content of the sample.

3.0 Definitions

3.1 *Well-mixed* in the context of this method refers to turbulent flow which results in multiple-phase waste in effect behaving as single-phase waste due to good mixing.

4.0 Interferences. [Reserved]

5.0 Safety

5.1 Disclaimer. This method may involve hazardous materials, operations, and equipment. This test method may not address all of the safety problems associated with its use. It is the responsibility of the user of this test method to establish appropriate safety and health practices and to determine the applicability of regulatory limitations prior to performing this test method.

6.0 Equipment and Supplies

Note: Mention of trade names or specific products does not constitute endorsement by the Environmental Protection Agency.

6.1 Sampling. The following equipment is required:

6.1.1 Sampling Tube. Flexible Teflon, 0.25 in. ID (6.35 mm).

6.1.2 Sample Container. Borosilicate glass, 40-mL, and a Teflon-lined screw cap capable of forming an air tight seal.

6.1.3 Cooling Coil. Fabricated from 0.25 in (6.35 mm). ID 304 stainless steel tubing with a thermocouple at the coil outlet.

6.2 Analysis. The following equipment is required.

6.2.1 Purging Apparatus. For separating the VO from the waste sample. A schematic of the system is shown in Figure 25D–1. The purging apparatus consists of the following major components.

6.2.1.1 Purging Flask. A glass container to hold the sample while it is heated and purged with dry nitrogen. The cap of the purging flask is equipped with three fittings: one for a purging lance (fitting with the #7 Ace-thread), one for the Teflon exit tubing (side fitting, also a #7 Ace-thread), and a third (a 50-mm Ace-thread) to attach the base of the purging flask as shown in Figure 25D–2. The base of the purging flask is a 50-mm ID (2 in) cylindrical glass tube. One end of the tube is open while the other end is sealed. Exact dimensions are shown in Figure 25D–2.

6.2.1.2 Purging Lance. Glass tube, 6-mm OD (0.2 in) by 30 cm (12 in) long. The purging end of the tube is fitted with a four-arm bubbler with each tip drawn to an opening 1 mm (0.04 in) in diameter. Details and exact dimensions are shown in Figure 25D–2.

6.2.1.3 Coalescing Filter. Porous fritted disc incorporated into a container with the same dimensions as the purging flask. The details of the design are shown in Figure 25D–3.

6.2.1.4 Constant Temperature Chamber. A forced draft oven capable of maintaining a uniform temperature around the purging flask and coalescing filter of 75 ± 2°C (167 ± 3.6°F).

6.2.1.5 Three-way Valve. Manually operated, stainless steel. To introduce calibration gas into system.

6.2.1.6 Flow Controllers. Two, adjustable. One capable of maintaining a purge gas flow rate of 6 ± 0.06 L/min (0.2 ± 0.002 ft^3/min) The other capable of maintaining a calibration gas flow rate of 1–100 mL/min (0.00004–0.004 ft^3/min).

6.2.1.7 Rotameter. For monitoring the air flow through the purging system (0–10 L/min)(0–0.4 ft^3/min).

6.2.1.8 Sample Splitters. Two heated flow restrictors (placed inside oven or heated to 120 ± 10°C (248 ± 18 °F)). At a purge rate of 6 L/min (0.2 ft^3/min), one will supply a constant flow to the first detector (the rest of the flow will be directed to the second sample splitter). The second splitter will split the analytical flow between the second detector and the flow restrictor. The approximate flow to the FID will be 40 mL/min (0.0014 ft^3/min) and to the ELCD will be 15 mL/min (0.0005 ft^3/min), but the exact flow must be adjusted to be compatible with the individual detector and to meet its linearity requirement. The two sample splitters will be connected to each other by 1/8″ OD (3.175 mm) stainless steel tubing.

6.2.1.9 Flow Restrictor. Stainless steel tubing, 1/8″ OD (3.175 mm), connecting the second sample splitter to the ice bath. Length is determined by the resulting pressure in the purging flask (as measured by the pressure gauge). The resulting pressure from the use of the flow restrictor shall be 6–7 psig.

6.2.1.10 Filter Flask. With one-hole stopper. Used to hold ice bath. Excess purge gas is vented through the flask to prevent condensation in the flowmeter and to trap volatile organic compounds.

6.2.1.11 Four-way Valve. Manually operated, stainless steel. Placed inside oven, used to bypass purging flask.

6.2.1.12 On/Off Valves. Two, stainless steel. One heat resistant up to 130 °C (266 °F) and placed between oven and ELCD. The other a toggle valve used to control purge gas flow.

6.2.1.13 Pressure Gauge. Range 0–40 psi. To monitor pressure in purging flask and coalescing filter.

6.2.1.14 Sample Lines. Teflon, 1/4″ OD (6.35 mm), used inside the oven to carry purge gas to and from purging chamber and to and from coalescing filter to four-way valve. Also used to carry sample from four-way valve to first sample splitter.

6.2.1.15 Detector Tubing. Stainless steel, 1/8″ OD (3.175 mm), heated to 120 ± 10°C (248 ± 18 °F) . Used to carry sample gas from each sample splitter to a detector. Each piece of tubing must be wrapped with heat tape and insulating tape in order to insure that no cold spots exist. The tubing leading to the ELCD will also contain a heat-resistant on-off valve (Section 6.2.1.12) which shall also be wrapped with heat-tape and insulation.

6.2.2 Volatile Organic Measurement System. Consisting of an FID to measure

the carbon concentration of the sample and an ELCD to measure the chlorine concentration.

6.2.2.1 FID. A heated FID meeting the following specifications is required.

6.2.2.1.1 Linearity. A linear response (± 5 percent) over the operating range as demonstrated by the procedures established in Section 10.1.1.

6.2.2.1.2 Range. A full scale range of 50 pg carbon/sec to 50 µg carbon/sec. Signal attenuators shall be available to produce a minimum signal response of 10 percent of full scale.

6.2.2.1.3 Data Recording System. A digital integration system compatible with the FID for permanently recording the output of the detector. The recorder shall have the capability to start and stop integration at points selected by the operator or it shall be capable of the ''integration by slices'' technique (this technique involves breaking down the chromatogram into smaller increments, integrating the area under the curve for each portion, subtracting the background for each portion, and then adding all of the areas together for the final area count).

6.2.2.2 ELCD. An ELCD meeting the following specifications is required. 1-propanol must be used as the electrolyte. The electrolyte flow through the conductivity cell shall be 1 to 2 mL/min (0.00004 to 0.00007 ft^3/min).

Note: A ¼-in. ID (6.35 mm) quartz reactor tube is strongly recommended to reduce carbon buildup and the resulting detector maintenance.

6.2.2.2.1 Linearity. A linear response (± 10 percent) over the response range as demonstrated by the procedures in Section 10.1.2.

6.2.2.2.2 Range. A full scale range of 5.0 pg/sec to 500 ng/sec chloride. Signal attenuators shall be available to produce a minimum signal response of 10 percent of full scale.

6.2.2.2.3 Data Recording System. A digital integration system compatible with the output voltage range of the ELCD. The recorder must have the capability to start and stop integration at points selected by the operator or it shall be capable of performing the ''integration by slices'' technique.

7.0 Reagents and Standards

7.1 Sampling.

7.1.1 Polyethylene Glycol (PEG). Ninety-eight percent pure with an average molecular weight of 400. Before using the PEG, remove any organic compounds that might be detected as volatile organics by heating it to 120°C (248 °F) and purging it with nitrogen at a flow rate of 1 to 2 L/min (0.04 to 0.07 ft^3/min) for 2 hours. The cleaned PEG must be stored under a 1 to 2 L/min (0.04 to 0.07 ft^3/min) nitrogen purge until use. The purge apparatus is shown in Figure 25D–4.

7.2 Analysis.

7.2.1 Sample Separation. The following are required for the sample purging step.

7.2.1.1 PEG. Same as Section 7.1.1.

7.2.1.2 Purge Gas. Zero grade nitrogen (N_2), containing less than 1 ppm carbon.

7.2.2 Volatile Organics Measurement. The following are required for measuring the VO concentration.

7.2.2.1 Hydrogen (H_2). Zero grade H_2, 99.999 percent pure.

7.2.2.2 Combustion Gas. Zero grade air or oxygen as required by the FID.

7.2.2.3 Calibration Gas. Pressurized gas cylinder containing 10 percent propane and 1 percent 1,1-dichloroethylene by volume in nitrogen.

7.2.2.4 Water. Deionized distilled water that conforms to American Society for Testing and Materials Specification D 1193–74, Type 3, is required for analysis. At the option of the analyst, the $KMnO_4$ test for oxidizable organic matter may be omitted when high concentrations are not expected to be present.

7.2.2.5 1-Propanol. ACS grade or better. Electrolyte Solution. For use in the ELCD.

7.3 Quality Assurance Audit Samples.

7.3.1 It is recommended, but not required, that a performance audit sample be analyzed in conjunction with the field samples. The audit sample should be in a suitable sample matrix at a concentration similar to the actual field samples.

7.3.2 When making compliance determinations, and upon availability, audit samples may be obtained from the appropriate EPA regional Office or from the responsible enforcement authority and analyzed in conjunction with the field samples.

Note: The responsible enforcement authority should be notified at least 30 days prior to the test date to allow sufficient time for sample delivery.

8.0 Sample Collection, Preservation, Storage, and Transport

8.1 Sampling.

8.1.1 Sampling Plan Design and Development. Use the procedures in chapter nine of Reference 1 in Section 16 as guidance in developing a sampling plan.

8.1.2 Single Phase or Well-mixed Waste.

8.1.2.1 Install a sampling tap to obtain the sample at a point which is most representative of the unexposed waste (where the waste has had minimum opportunity to volatilize to the atmosphere). Assemble the sampling apparatus as shown in Figure 25D–5.

8.1.2.2 Prepare the sampling containers as follows: Pour 30 mL of clean PEG into the container. PEG will reduce but not eliminate the loss of organics during sample collection. Weigh the sample container with the screw cap, the PEG, and any labels to the nearest 0.01 g and record the weight (m_{st}). Store the containers in an ice bath until 1 hour before sampling (PEG will solidify at ice bath temperatures; allow the containers to reach room temperature before sampling).

8.1.2.3 Begin sampling by purging the sample lines and cooling coil with at least four volumes of waste. Collect the purged material in a separate container and dispose of it properly.

8.1.2.4 After purging, stop the sample flow and direct the sampling tube to a preweighed sample container, prepared as described in Section 8.1.2.2. Keep the tip of the tube below the surface of the PEG during sampling to minimize contact with the atmosphere. Sample at a flow rate such that the temperature of the waste is less than 10°C (50 °F). Fill the sample container and immediately cap it (within 5 seconds) so that a minimum headspace exists in the container. Store immediately in a cooler and cover with ice.

8.1.3 Multiple-phase Waste. Collect a 10 g sample of each phase of waste generated using the procedures described in Section 8.1.2 or 8.1.5. Each phase of the waste shall be analyzed as a separate sample. Calculate the weighted average VO concentration of the waste using Equation 25D–13 (Section 12.14).

8.1.4 Solid waste. Add approximately 10 g of the solid waste to a container prepared in the manner described in Section 8.1.2.2, minimizing headspace. Cap and chill immediately.

8.1.5 Alternative to Tap Installation. If tap installation is impractical or impossible, fill a large, clean, empty container by submerging the container into the waste below the surface of the waste. Immediately fill a container prepared in the manner described in Section 8.1.2.2 with approximately 10 g of the waste collected in the large container. Minimize headspace, cap and chill immediately.

8.1.6 Alternative sampling techniques may be used upon the approval of the Administrator.

8.2 Sample Recovery.

8.2.1 Assemble the purging apparatus as shown in Figures 25D–1 and 25D–2. The oven shall be heated to

75 ± 2°C (167 ± 3.6 °F). The sampling lines leading from the oven to the detectors shall be heated to 120 ± 10°C (248 ± 18 °F) with no cold spots. The flame ionization detector shall be operated with a heated block. Adjust the purging lance so that it reaches the bottom of the chamber.

8.2.2 Remove the sample container from the cooler, and wipe the exterior of the container to remove any extraneous ice, water, or other debris. Reweigh the sample container to the nearest 0.01 g, and record the weight (m_{sf}). Pour the contents of the sample container into the purging flask, rinse the sample container three times with a total of 20 mL of PEG (since the sample container originally held 30 mL of PEG, the total volume of PEG added to the purging flask will be 50 mL), transferring the rinsings to the purging flask after each rinse. Cap purging flask between rinses. The total volume of PEG in the purging flask shall be 50 mL. Add 50 mL of water to the purging flask.

9.0 Quality Control

9.1 Quality Control Samples. If audit samples are not available, prepare and analyze the two types of quality control samples (QCS) listed in Sections 9.4.1 and 9.4.2. Before placing the system in operation, after a shutdown of greater than six months, and after any major modifications, analyze each QCS in triplicate. For each detector, calculate the percent recovery by dividing measured concentration by theoretical concentration and multiplying by 100. Determine the mean percent recovery for each detector for each QCS triplicate analysis. The RSD for any triplicate analysis shall be ≤10 percent. For QCS 1 (methylene chloride), the percent recovery shall be ≥90 percent for carbon as methane, and ≥55 percent for chlorine as chloride. For QCS 2 (1,3-dichloro-2-propanol), the percent recovery shall be ≤15 percent for carbon as methane, and ≤6 percent for chlorine as chloride. If the analytical system does not meet the above-mentioned criteria for both detectors, check the system parameters (temperature, system pressure, purge rate, etc.), correct the problem, and repeat the triplicate analysis of each QCS.

9.1.1 QCS 1, Methylene Chloride. Prepare a stock solution by weighing, to the nearest 0.1 mg, 55 µL of HPLC grade methylene chloride in a tared 5 mL volumetric flask. Record the weight in milligrams, dilute to 5 mL with cleaned PEG, and inject 100 µL of the stock solution into a sample prepared as a water blank (50 mL of cleaned PEG and 60 mL of water in the purging flask). Analyze the QCS according to the procedures described in Sections 10.2 and 10.3, excluding Section 10.2.2. To calculate the theoretical carbon concentration (in mg) in QCS 1, multiply mg of methylene chloride in the stock solution by 3.777×10^{-3}. To calculate the theoretical chlorine concentration (in mg) in QCS 1, multiply mg of methylene chloride in the stock solution by 1.670×10^{-2}.

9.1.2 QCS 2, 1,3-dichloro-2-propanol. Prepare a stock solution by weighing, to the nearest 0.1 mg, 60 µL of high purity grade 1,3-dichloro-2-propanol in a tared 5 mL volumetric flask. Record the weight in milligrams, dilute to 5 mL with cleaned PEG, and inject 100 µL of the stock solution into a sample prepared as a water blank (50 mL of cleaned PEG and 60 mL of water in the purging flask). Analyze the QCS according to the procedures described in Sections 10.2 and 10.3, excluding Section 10.2.2. To calculate the theoretical carbon concentration (in mg) in QCS 2, multiply mg of 1,3-dichloro-2-propanol in the stock solution by 7.461×10^{-3}. To calculate the theoretical chlorine concentration (in mg) in QCS 2, multiply mg of 1,3-dichloro-2-propanol in the stock solution by 1.099×10^{-2}.

9.1.3 Routine QCS Analysis. For each set of compliance samples (in this context, set is per facility, per compliance test), analyze one QCS 1 and one QCS 2 sample. The percent recovery for each sample for each detector shall be ± 13 percent of the mean recovery established for the most recent set of QCS triplicate analysis (Section 9.4). If the sample does not meet this criteria, check the system components and analyze another QCS 1 and 2 until a single set of QCS meet the ± 13 percent criteria.

10.0 Calibration and Standardization

10.1 Initial Performance Check of Purging System. Before placing the system in operation, after a shutdown of greater than six months, after any major modifications, and at least once per month during continuous operation, conduct the linearity checks described in Sections 10.1.1 and 10.1.2. Install calibration gas at the three-way calibration gas valve. See Figure 25D–1.

10.1.1 Linearity Check Procedure. Using the calibration standard described in Section 7.2.2.3 and by varying the injection time, it is possible to calibrate at multiple concentration levels. Use Equation 25D–3 to calculate three sets of calibration gas flow rates and run times needed to introduce a total mass of carbon, as methane, (m_c) of 1, 5, and 10 mg into the system (low, medium and high FID calibration, respectively). Use Equation 25D–4 to calculate three sets of calibration gas flow rates and run times needed to introduce a total chloride mass (m_{ch}) of 1, 5, and 10 mg into the system (low, medium and high ELCD calibration, respectively). With the system operating in standby mode, allow the FID and the ELCD to establish a stable baseline. Set the secondary pressure regulator of the calibration gas cylinder to the same pressure as the purge gas cylinder and set the proper flow rate with the calibration flow controller (see Figure 25D–1). The calibration gas flow rate can be measured with a flowmeter attached to the vent position of the calibration gas valve. Set the four-way bypass valve to standby position so that the calibration gas flows through the coalescing filter only. Inject the calibration gas by turning the calibration gas valve from vent position to inject position. Continue the calibration gas flow for the appropriate period of time before switching the calibration valve to vent position. Continue recording the response of the FID and the ELCD for 5 min after switching off calibration gas flow. Make triplicate injections of all six levels of calibration.

10.1.2 Linearity Criteria. Calculate the average response factor (Equations 25D–5 and 25D–6) and the relative standard deviation (RSD) (Equation 25D–10) at each level of the calibration curve for both detectors. Calculate the overall mean of the three response factor averages for each detector. The FID linearity is acceptable if each response factor is within 5 percent of the overall mean and if the RSD for each set of triplicate injections is less than 5 percent. The ELCD linearity is acceptable if each response factor is within 10 percent of the overall mean and if the RSD for each set of triplicate injections is less than 10 percent. Record the overall mean value of the response factors for the FID and the ELCD. If the calibration for either the FID or the ELCD does not meet the criteria, correct the detector/system problem and repeat Sections 10.1.1 and 10.1.2.

10.2 Daily Calibrations.

10.2.1 Daily Linearity Check. Follow the procedures outlined in Section 10.1.1 to analyze the medium level calibration for both the FID and the ELCD in duplicate at the start of the day. Calculate the response factors and the RSDs for each detector. For the FID, the calibration is acceptable if the average response factor is within 5 percent of the overall mean response factor (Section 10.1.2) and if the RSD for the duplicate injection is less than 5 percent. For the ELCD, the calibration is acceptable if the average response factor

is within 10 percent of the overall mean response factor (Section 10.1.2) and if the RSD for the duplicate injection is less than 10 percent. If the calibration for either the FID or the ELCD does not meet the criteria, correct the detector/system problem and repeat Sections 10.1.1 and 10.1.2.

10.2.2 Calibration Range Check.

10.2.2.1 If the waste concentration for either detector falls below the range of calibration for that detector, use the procedure outlined in Section 10.1.1 to choose two calibration points that bracket the new target concentration. Analyze each of these points in triplicate (as outlined in Section 10.1.1) and use the criteria in Section 10.1.2 to determine the linearity of the detector in this ''mini-calibration'' range.

10.2.2.2 After the initial linearity check of the mini-calibration curve, it is only necessary to test one of the points in duplicate for the daily calibration check (in addition to the points specified in Section 10.2.1). The average daily mini-calibration point should fit the linearity criteria specified in Section 10.2.1. If the calibration for either the FID or the ELCD does not meet the criteria, correct the detector/system problem and repeat the calibration procedure mentioned in the first paragraph of Section 10.2.2. A mini-calibration curve for waste concentrations above the calibration curve for either detector is optional.

10.3 Analytical Balance. Calibrate against standard weights.

11.0 Analysis

11.1 Sample Analysis.

11.1.1 Turn on the constant temperature chamber and allow the temperature to equilibrate at 75 ± 2°C (167 ± 3.6 °F). Turn the four-way valve so that the purge gas bypasses the purging flask, the purge gas flowing through the coalescing filter and to the detectors (standby mode). Turn on the purge gas. Allow both the FID and the ELCD to warm up until a stable baseline is achieved on each detector. Pack the filter flask with ice. Replace ice after each run and dispose of the waste water properly. When the temperature of the oven reaches 75 ± 2°C (167 ± 3.6 °F), start both integrators and record baseline. After 1 min, turn the four-way valve so that the purge gas flows through the purging flask, to the coalescing filter and to the sample splitters (purge mode). Continue recording the response of the FID and the ELCD. Monitor the readings of the pressure gauge and the rotameter. If the readings fall below established setpoints, stop the purging, determine the source of the leak, and resolve the problem before resuming. Leaks detected during a sampling period invalidate that sample.

11.1.2 As the purging continues, monitor the output of the detectors to make certain that the analysis is proceeding correctly and that the results are being properly recorded. Every 10 minutes read and record the purge flow rate, the pressure and the chamber temperature. Continue the purging for 30 minutes.

11.1.3 For each detector output, integrate over the entire area of the peak starting at 1 minute and continuing until the end of the run. Subtract the established baseline area from the peak area. Record the corrected area of the peak. See Figure 25D–6 for an example integration.

11.2 Water Blank. A water blank shall be analyzed for each batch of cleaned PEG prepared. Transfer about 60 mL of water into the purging flask. Add 50 mL of the cleaned PEG to the purging flask. Treat the blank as described in Sections 8.2 and 8.3, excluding Section 8.2.2. Calculate the concentration of carbon and chlorine in the blank sample (assume 10 g of waste as the mass). A VO concentration equivalent to ≤10 percent of the applicable standard may be subtracted from the measured VO concentration of the waste samples. Include all blank results and documentation in the test report.

11.3 Audit Sample Analysis.

11.3.1 When the method is used to analyze samples to demonstrate compliance with a source emission regulation, an audit sample, if available, must be analyzed.

11.3.2 Concurrently analyze the audit sample and the compliance samples in the same manner to evaluate the technique of the analyst and the standards preparation.

11.3.3 The same analyst, analytical reagents, and analytical system must be used for the compliance samples and the audit sample. If this condition is met, duplicate auditing of subsequent compliance analyses for the same enforcement agency within a 30-day period is waived. An audit sample may not be used to validate different sets of compliance samples under the jurisdiction of separate enforcement agencies, unless prior arrangements have been made with both enforcement agencies.

11.4 Audit Sample Results.

11.4.1 Calculate the audit sample concentrations and submit results using the instructions provided with the audit samples.

11.4.2 Report the results of the audit samples and the compliance determination samples along with their identification numbers, and the analyst's name to the responsible enforcement authority. Include this information with reports of any subsequent compliance analyses for the same enforcement authority during the 30-day period.

12.0 Data Analysis and Calculations

12.1 Nomenclature.

A_b = Area under the water blank response curve, counts.
A_c = Area under the calibration response curve, counts.
A_s = Area under the sample response curve, counts.
C = Concentration of volatile organics in the sample, ppmw.
C_c = Concentration of carbon, as methane, in the calibration gas, mg/L.
C_{ch} = Concentration of chloride in the calibration gas, mg/L.
C_j = VO concentration of phase j, ppmw.
DR_t = Average daily response factor of the FID, mg CH_4/counts.
Dr_{th} = Average daily response factor of the ELCD, mg Cl^-/counts.
F_j = Weight fraction of phase j present in the waste.
m_c = Mass of carbon, as methane, in a calibration run, mg.
m_{ch} = Mass of chloride in a calibration run, mg.
m_s = Mass of the waste sample, g.
m_{sc} = Mass of carbon, as methane, in the sample, mg.
m_{sf} = Mass of sample container and waste sample, g.
m_{sh} = Mass of chloride in the sample, mg.
m_{st} = Mass of sample container prior to sampling, g.
m_{VO} = Mass of volatile organics in the sample, mg.
n = Total number of phases present in the waste.
P_p = Percent propane in calibration gas (L/L).
P_{vc} = Percent 1,1-dichloroethylene in calibration gas (L/L).
Q_c = Flow rate of calibration gas, L/min.
t_c = Length of time standard gas is delivered to the analyzer, min.
W = Weighted average VO concentration, ppmw.

12.2 Concentration of Carbon, as Methane, in the Calibration Gas.

$$C_c = (19.681 \times P_p) + (13.121 \times P_{vc}) \qquad \text{Eq. 25D-1}$$

12.3 Concentration of Chloride in the Calibration Gas.

$$C_{ch} = 28.998 \times P_{vc} \qquad \text{Eq. 25D-2}$$

12.4 Mass of Carbon, as Methane, in a Calibration Run.

$$M_c = C_c \times Q_c \times t_c \qquad \text{Eq. 25D-3}$$

12.5 Mass of Chloride in a Calibration Run.

$$m_{ch} = C_{ch} \times Q_c \times t_c \qquad \text{Eq. 25D-4}$$

12.6 FID Response Factor, mg/counts.

$$DR_t = \frac{m_c}{A_c} \qquad \text{Eq. 25D-5}$$

12.7 ELCD Response Factor, mg/counts.

$$DR_{th} = \frac{m_{ch}}{A_c} \qquad \text{Eq. 25D-6}$$

12.8 Mass of Carbon in the Sample.

$$m_{sc} = DR_t (A_s - A_b) \qquad \text{Eq. 25D-7}$$

12.9 Mass of Chloride in the Sample.

$$m_{sh} = DR_{th} (A_s - A_b) \qquad \text{Eq. 25D-8}$$

12.10 Mass of Volatile Organics in the Sample.

$$m_{vo} = m_{sc} + m_{sh} \qquad \text{Eq. 25D-9}$$

12.11 Relative Standard Deviation.

$$RSD = \frac{100}{\bar{x}} \sqrt{\frac{\sum_{i=1}^{n} (x_i - \bar{x})^2}{n-1}} \qquad \text{Eq. 25D-10}$$

12.12 Mass of Sample.

$$m_s = m_{sf} - m_{st} \qquad \text{Eq. 25D-11}$$

12.13 Concentration of Volatile Organics in Waste.

$$C = \frac{(m_{vo} \times 1000)}{m_s} \qquad \text{Eq. 25D-12}$$

12.14 Weighted Average VO Concentration of Multi-phase Waste.

$$W = \sum_{j=1}^{n} F_j x \overline{C}_j \qquad \text{Eq. 25D-13}$$

13.0 Method Performance. [Reserved]

14.0 Pollution Prevention. [Reserved]

15.0 Waste Management. [Reserved]

16.0 References

1. ''Test Methods for Evaluating Solid Waste, Physical/Chemistry Methods'', U.S. Environmental Protection Agency. Publication SW–846, 3rd Edition, November 1986 as amended by Update I, November 1990.

BILLING CODE 6560–50–P

17.0 Tables, Diagrams, Flowcharts, and Validation Data

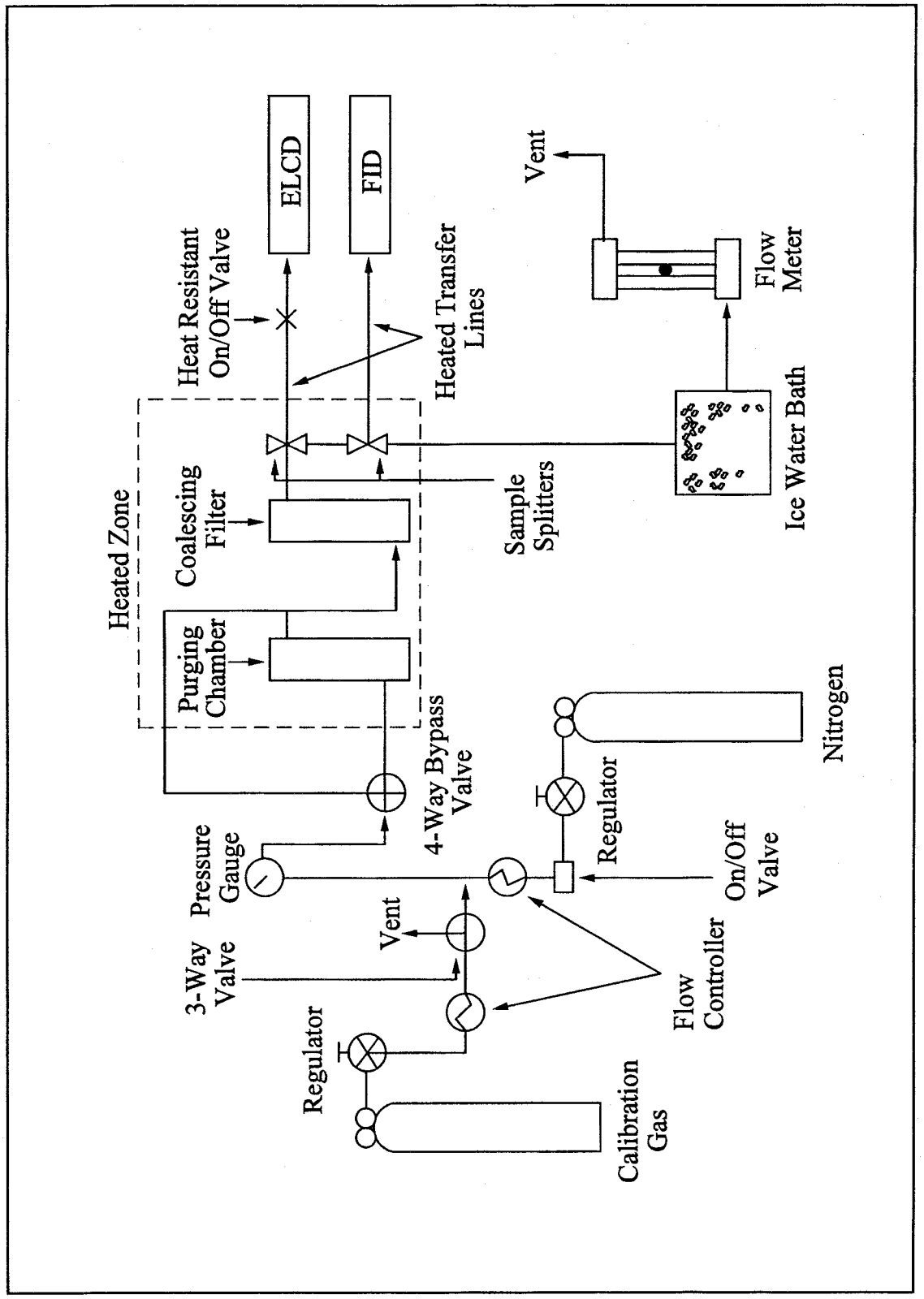

Figure 25D-1. Schematic of Purging Apparatus.

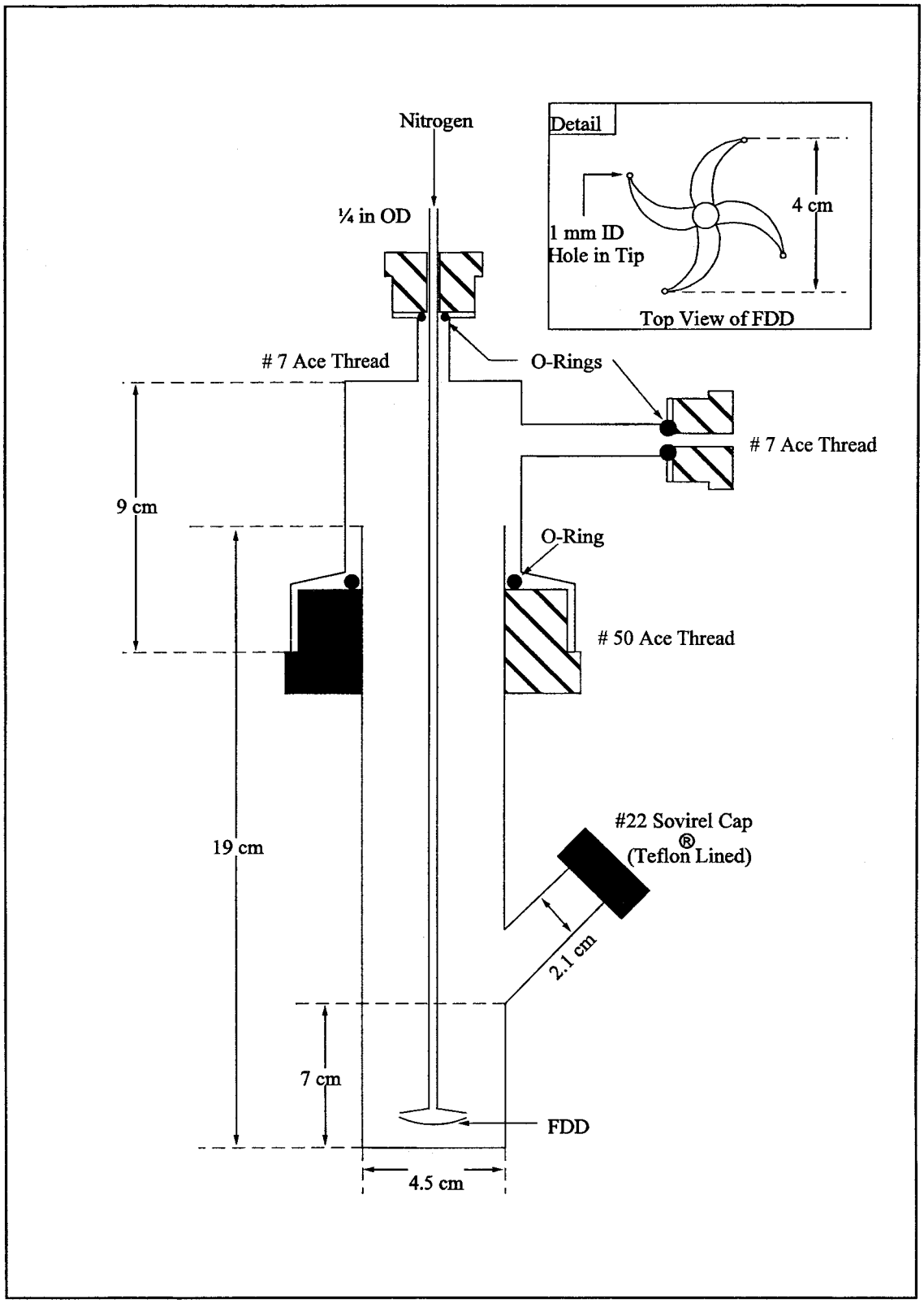

Figure 25D-2. Purging Lance.

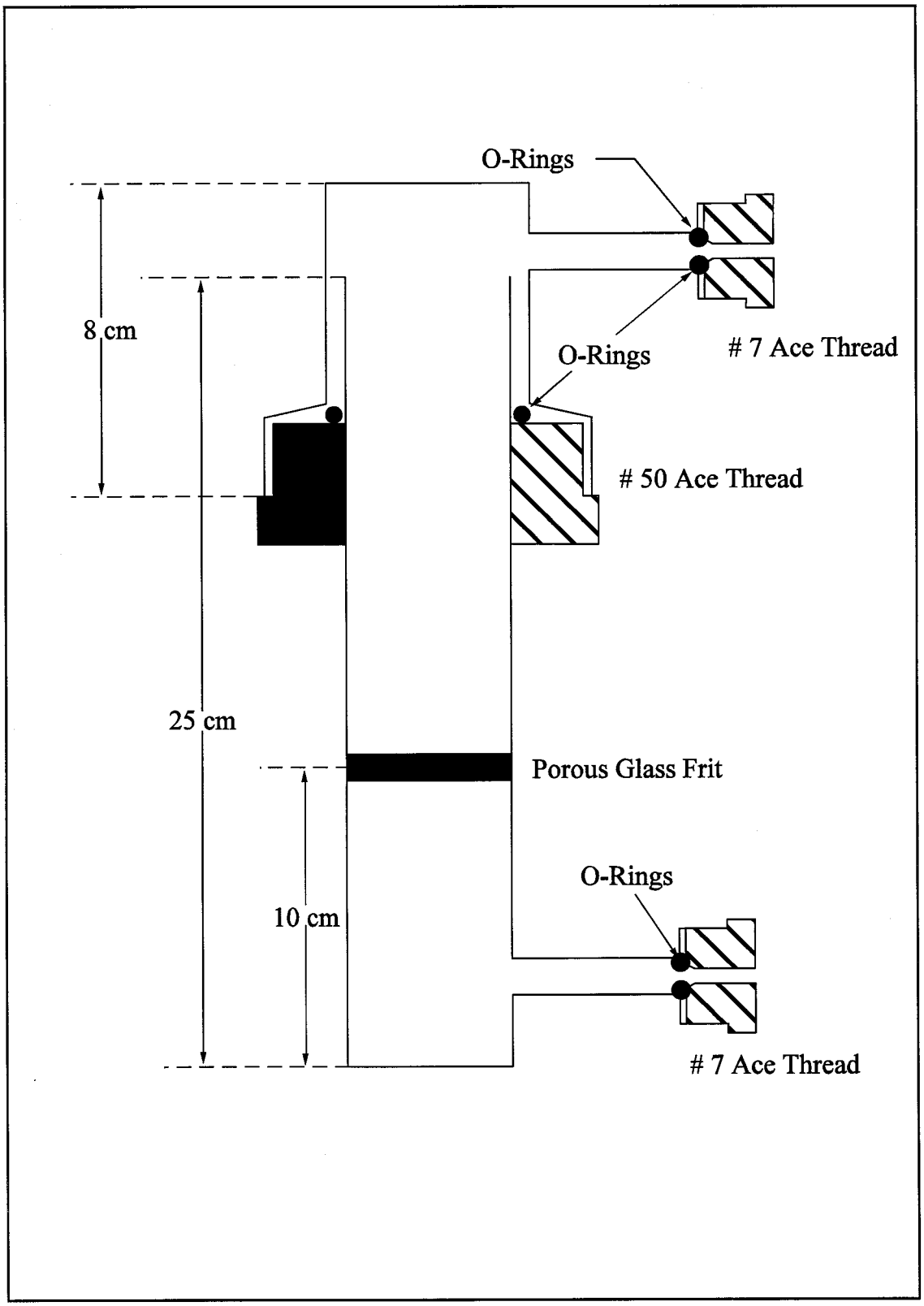

Figure 25D-3. Schematic of Coalescing Filter.

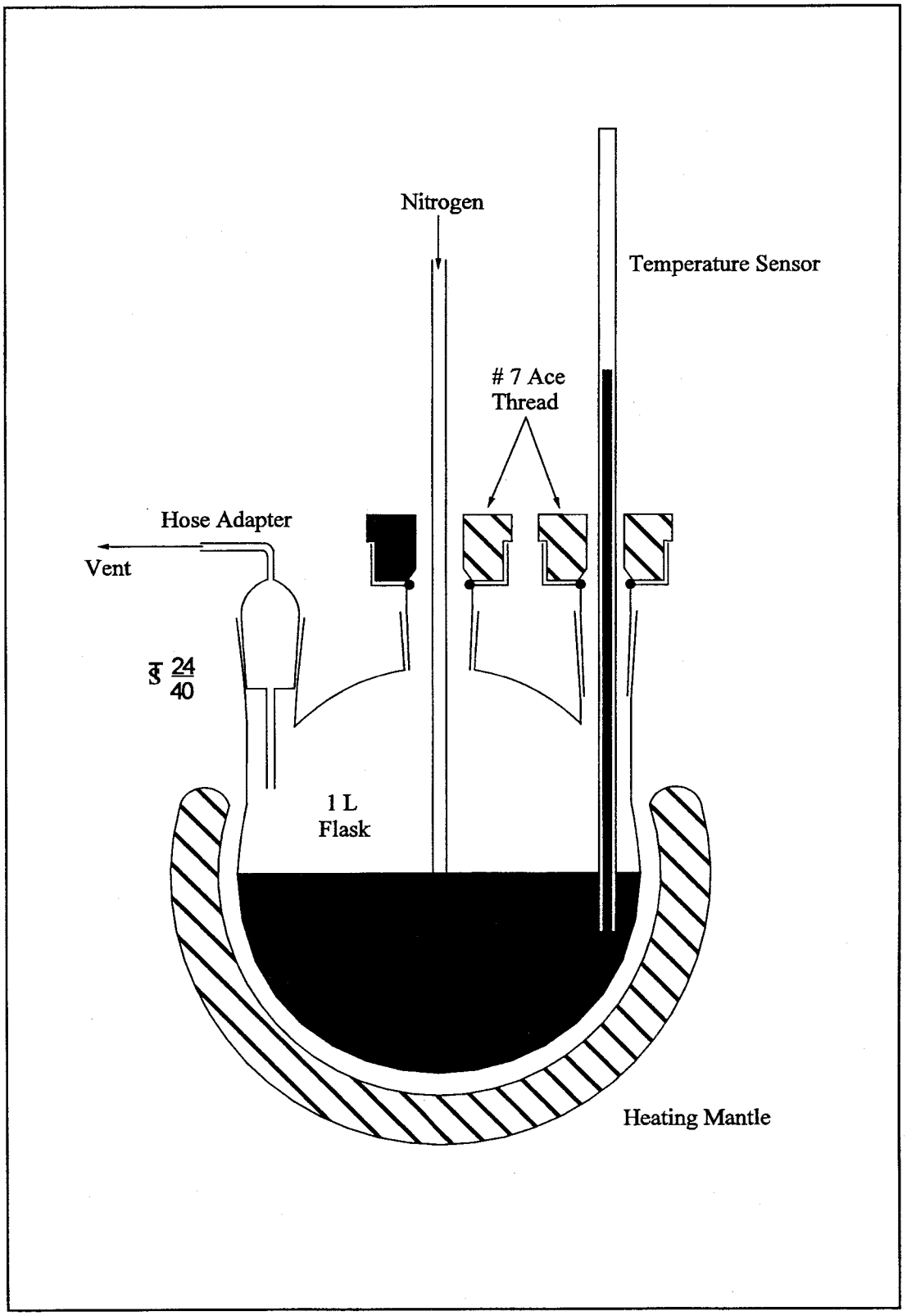

Figure 25D-4. Schematic of PEG Cleaning System.

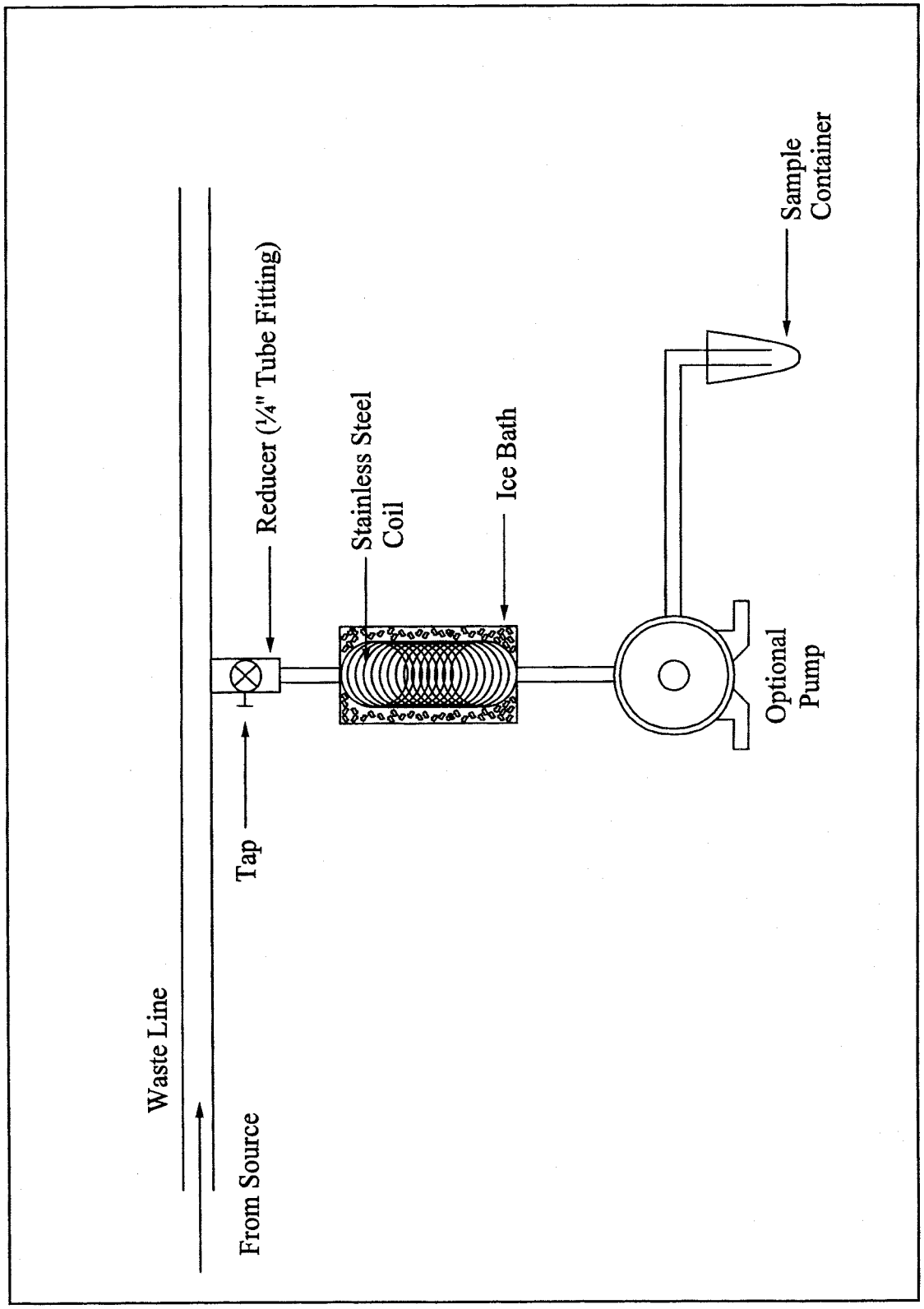

Figure 25D-5. Schematic of Sampling Apparatus.

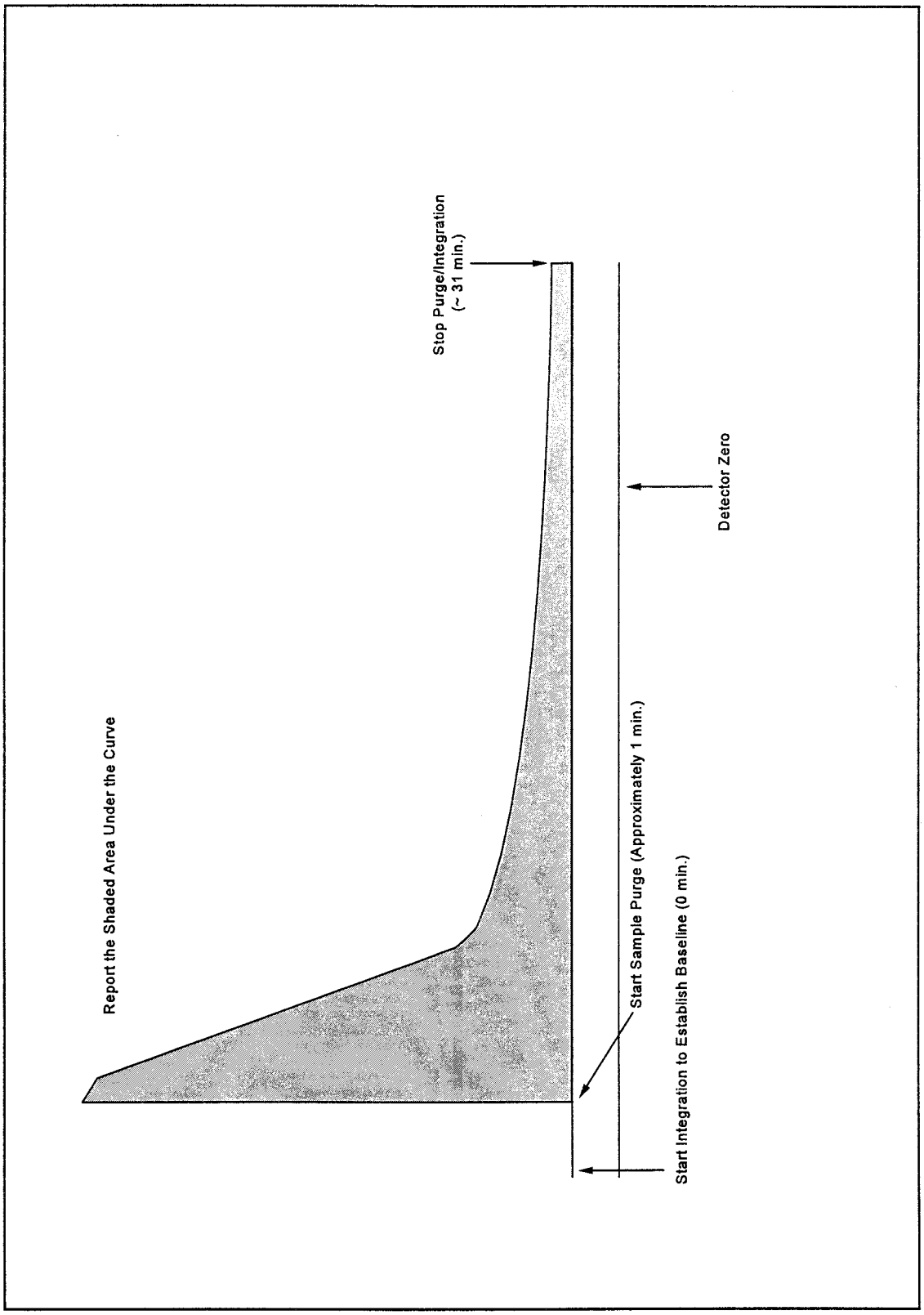

Figure 25D-6. Example Integration of Either Detector.

Method 25E—Determination of Vapor Phase Organic Concentration in Waste Samples

Note: Performance of this method should not be attempted by persons unfamiliar with the operation of a flame ionization detector (FID) nor by those who are unfamiliar with source sampling because knowledge beyond the scope of this presentation is required. This method is not inclusive with respect to specifications (*e.g.,* reagents and standards) and calibration procedures. Some material is incorporated by reference from other methods. Therefore, to obtain reliable results, persons using this method should have a thorough knowledge of at least the following additional test methods: Method 106, part 61, Appendix B, and Method 18, part 60, Appendix A.

1.0 Scope and Application

1.1 Applicability. This method is applicable for determining the vapor pressure of waste cited by an applicable regulation.

1.2 Data Quality Objectives. Adherence to the requirements of this method will enhance the quality of the data obtained from air pollutant sampling methods.

2.0 Summary of Method

2.1 The headspace vapor of the sample is analyzed for carbon content by a headspace analyzer, which uses an FID.

3.0 Definitions. [Reserved]

4.0 Interferences

4.1 The analyst shall select the operating parameters best suited to the requirements for a particular analysis. The analyst shall produce confirming data through an adequate supplemental analytical technique and have the data available for review by the Administrator.

5.0 Safety. [Reserved]

6.0 Equipment and Supplies

6.1 Sampling. The following equipment is required:

6.1.1 Sample Containers. Vials, glass, with butyl rubber septa, Perkin-Elmer Corporation Numbers 0105–0129 (glass vials), B001–0728 (gray butyl rubber septum, plug style), 0105–0131 (butyl rubber septa), or equivalent. The seal must be made from butyl rubber. Silicone rubber seals are not acceptable.

6.1.2 Vial Sealer. Perkin-Elmer Number 105–0106, or equivalent.

6.1.3 Gas-Tight Syringe. Perkin-Elmer Number 00230117, or equivalent.

6.1.4 The following equipment is required for sampling.

6.1.4.1 Tap.

6.1.4.2 Tubing. Teflon, 0.25-in. ID.

Note: Mention of trade names or specific products does not constitute endorsement by the Environmental Protection Agency.

6.1.4.3 Cooling Coil. Stainless steel (304), 0.25 in.-ID, equipped with a thermocouple at the coil outlet.

6.2 Analysis. The following equipment is required.

6.2.1 Balanced Pressure Headspace Sampler. Perkin-Elmer HS–6, HS–100, or equivalent, equipped with a glass bead column instead of a chromatographic column.

6.2.2 FID. An FID meeting the following specifications is required.

6.2.2.1 Linearity. A linear response (±5 percent) over the operating range as demonstrated by the procedures established in Section 10.2.

6.2.2.2 Range. A full scale range of 1 to 10,000 parts per million (ppm) propane (C_3H_8). Signal attenuators shall be available to produce a minimum signal response of 10 percent of full scale.

6.2.3 Data Recording System. Analog strip chart recorder or digital integration system compatible with the FID for permanently recording the output of the detector.

6.2.4 Temperature Sensor. Capable of reading temperatures in the range of 30 to 60°C (86 to 140°F) with an accuracy of ±0.1°C (±0.2°F).

7.0 Reagents and Standards

7.1 Analysis. The following items are required for analysis.

7.1.1 Hydrogen (H_2). Zero grade hydrogen, as required by the FID.

7.1.2 Carrier Gas. Zero grade nitrogen, containing less than 1 ppm carbon (C) and less than 1 ppm carbon dioxide.

7.1.3 Combustion Gas. Zero grade air or oxygen as required by the FID.

7.2 Calibration and Linearity Check.

7.2.1 Stock Cylinder Gas Standard. 100 percent propane. The manufacturer shall: (a) Certify the gas composition to be accurate to ±3 percent or better (see Section 7.2.1.1); (b) recommend a maximum shelf life over which the gas concentration does not change by greater than ±5 percent from the certified value; and (c) affix the date of gas cylinder preparation, certified propane concentration, and recommended maximum shelf life to the cylinder before shipment to the buyer.

7.2.1.1 Cylinder Standards Certification. The manufacturer shall certify the concentration of the calibration gas in the cylinder by (a) directly analyzing the cylinder and (b) calibrating his analytical procedure on the day of cylinder analysis. To calibrate his analytical procedure, the manufacturer shall use, as a minimum, a three-point calibration curve.

7.2.1.2 Verification of Manufacturer's Calibration Standards. Before using, the manufacturer shall verify each calibration standard by (a) comparing it to gas mixtures prepared in accordance with the procedure described in Section 7.1 of Method 106 of Part 61, Appendix B, or by (b) calibrating it against Standard Reference Materials (SRM's) prepared by the National Bureau of Standards, if such SRM's are available. The agreement between the initially determined concentration value and the verification concentration value must be within ±5 percent. The manufacturer must reverify all calibration standards on a time interval consistent with the shelf life of the cylinder standards sold.

8.0 Sampling Collection, Preservation, Storage, and Transport

8.1 Install a sampling tap to obtain a sample at a point which is most representative of the unexposed waste (where the waste has had minimum opportunity to volatilize to the atmosphere). Assemble the sampling apparatus as shown in Figure 25E–1.

8.2 Begin sampling by purging the sample lines and cooling coil with at least four volumes of waste. Collect the purged material in a separate container and dispose of it properly.

8.3 After purging, stop the sample flow and transfer the Teflon sampling tube to a sample container. Sample at a flow rate such that the temperature of the waste is <10°C (<50°F). Fill the sample container halfway (±5 percent) and cap it within 5 seconds. Store immediately in a cooler and cover with ice.

8.4 Alternative sampling techniques may be used upon the approval of the Administrator.

9.0 Quality Control

9.1 Miscellaneous Quality Control Measures.

Section	Quality control measure	Effect
10.2, 10.3	FID calibration and response check	Ensure precision of analytical results.

10.0 Calibration and Standardization

Note: Maintain a record of performance of each item.

10.1 Use the procedures in Sections 10.2 to calibrate the headspace analyzer and FID and check for linearity before the system is first placed in operation, after any shutdown longer than 6 months, and after any modification of the system.

10.2 Calibration and Linearity. Use the procedures in Section 10 of Method 18 of Part 60, Appendix A, to prepare the standards and calibrate the flowmeters, using propane as the standard gas. Fill the calibration standard vials halfway (±5 percent) with deionized water. Purge and fill the airspace with calibration standard. Prepare a minimum of three concentrations of calibration standards in triplicate at concentrations that will bracket the applicable cutoff. For a cutoff of 5.2 kPa (0.75 psi), prepare nominal concentrations of 30,000, 50,000, and 70,000 ppm as propane. For a cutoff of 27.6 kPa (4.0 psi), prepare nominal concentrations of 200,000, 300,000, and 400,000 ppm as propane.

10.2.1 Use the procedures in Section 11.3 to measure the FID response of each standard. Use a linear regression analysis to calculate the values for the slope (k) and the y-intercept (b). Use the procedures in Sections 12.3 and 12.2 to test the calibration and the linearity.

10.3 Daily FID Calibration Check. Check the calibration at the beginning and at the end of the daily runs by using the following procedures. Prepare 2 calibration standards at the nominal cutoff concentration using the procedures in Section 10.2. Place one at the beginning and one at the end of the daily run. Measure the FID response of the daily calibration standard and use the values for k and b from the most recent calibration to calculate the concentration of the daily standard. Use an equation similar to 25E–2 to calculate the percent difference between the daily standard and C_s. If the difference is within 5 percent, then the previous values for k and b can be used. Otherwise, use the procedures in Section 10.2 to recalibrate the FID.

11.0 Analytical Procedures

11.1 Allow one hour for the headspace vials to equilibrate at the temperature specified in the regulation. Allow the FID to warm up until a stable baseline is achieved on the detector.

11.2 Check the calibration of the FID daily using the procedures in Section 10.3.

11.3 Follow the manufacturer's recommended procedures for the normal operation of the headspace sampler and FID.

11.4 Use the procedures in Sections 12.4 and 12.5 to calculate the vapor phase organic vapor pressure in the samples.

11.5 Monitor the output of the detector to make certain that the results are being properly recorded.

12.0 Data Analysis and Calculations

12.1 Nomenclature.

A = Measurement of the area under the response curve, counts.

b = y-intercept of the linear regression line.

C_a = Measured vapor phase organic concentration of sample, ppm as propane.

C_{ma} = Average measured vapor phase organic concentration of standard, ppm as propane.

C_m = Measured vapor phase organic concentration of standard, ppm as propane.

C_s = Calculated standard concentration, ppm as propane.

k = Slope of the linear regression line.

P_{bar} = Atmospheric pressure at analysis conditions, mm Hg (in. Hg).

P* = Organic vapor pressure in the sample, kPa (psi).

PD = Percent difference between the average measured vapor phase organic concentration (C_m) and the calculated standard concentration (C_s).

RSD = Relative standard deviation.

$\beta = 1.333 \times 10^{-7}$ kPa/[(mm Hg)(ppm)], (4.91×10^{-7} psi/[(in. Hg)(ppm)])

12.2 Linearity. Use the following equation to calculate the measured standard concentration for each standard vial.

$$C_m = kA + b \qquad \text{Eq. 25E-1}$$

12.2.1 Calculate the average measured standard concentration (C_{ma}) for each set of triplicate standards and use the following equation to calculate PD between C_{ma} and C_s. The instrument linearity is acceptable if the PD is within five for each standard.

$$PD = \frac{C_s - C_{ma}}{C_s} \times 100 \qquad \text{Eq. 25E-2}$$

12.3. Relative Standard Deviation (RSD). Use the following equation to calculate the RSD for each triplicate set of standards.

$$RSD = \frac{100}{C_{ma}} \sqrt{\frac{\sum (C_m - C_{ma})^2}{2}} \qquad \text{Eq. 25E-3}$$

The calibration is acceptable if the RSD is within five for each standard concentration.

12.4 Concentration of organics in the headspace. Use the following equation to calculate the concentration of vapor phase organics in each sample.

$$C_a = kA + b \qquad \text{Eq. 25E-4}$$

12.5 Vapor Pressure of Organics in the Headspace Sample. Use the following equation to calculate the vapor pressure of organics in the sample.

$$P^* = \beta P_{bar} C_a \qquad \text{Eq. 25E-5}$$

13.0 Method Performance. [Reserved]

14.0 Pollution Prevention. [Reserved]

15.0 Waste Management. [Reserved]

16.0 References

1. Salo, Albert E., Samuel Witz, and Robert D. MacPhee. ''Determination of Solvent Vapor Concentrations by Total Combustion Analysis: a Comparison of Infared with Flame Ionization Detectors. Paper No. 75–33.2. (Presented at the 68th Annual Meeting of the Air Pollution Control Association. Boston, Massachusetts.

2. Salo, Albert E., William L. Oaks, and Robert D. MacPhee. ''Measuring the Organic Carbon Content of Source Emissions for Air Pollution Control. Paper No. 74–190. (Presented at the 67th Annual Meeting of the Air Pollution Control Association. Denver, Colorado. June 9–13, 1974.) p. 25.

BILLING CODE 6560–50–P

17.0 Tables, Diagrams, Flowcharts, and Validation Data

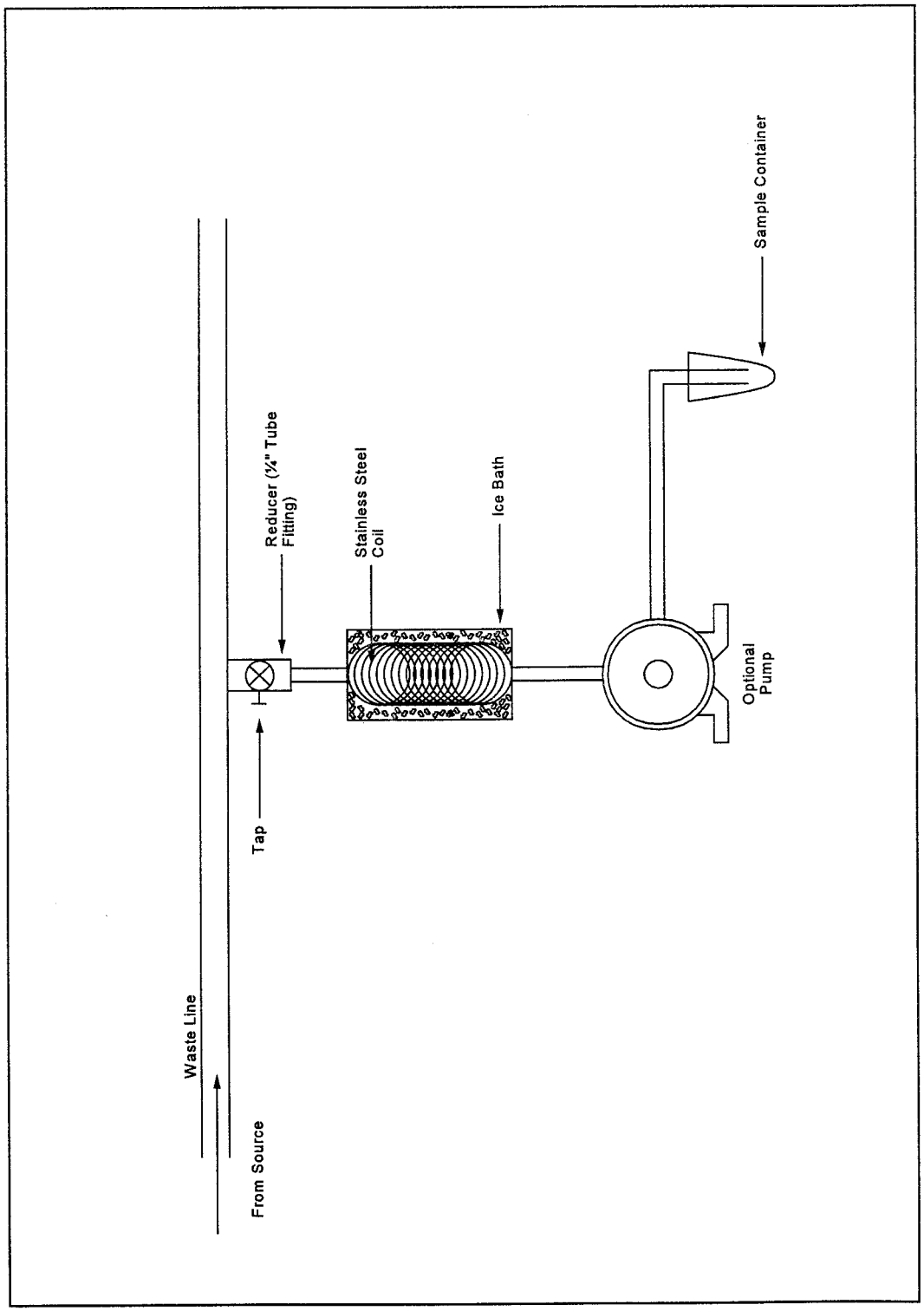

Figure 25E-1. Schematic of Sampling Apparatus

BILLING CODE 6560–50–C

Method 26—Determination of Hydrogen Halide and Halogen Emissions From Stationary Sources Non-Isokinetic Method

1.0 Scope and Application

1.1 Analytes.

Analytes	CAS No.
Hydrogen Chloride (HCl)	7647–01–0
Hydrogen Bromide (HBr)	10035–10–6
Hydrogen Fluoride (HF)	7664–39–3
Chlorine (Cl_2)	7882–50–5
Bromine (Br_2)	7726–95–6

1.2 Applicability. This method is applicable for determining emissions of hydrogen halides (HX) (HCl, HBr, and HF) and halogens (X_2) (Cl_2 and Br_2) from stationary sources when specified by the applicable subpart. Sources, such as those controlled by wet scrubbers, that emit acid particulate matter must be sampled using Method 26A.

1.3 Data Quality Objectives. Adherence to the requirements of this method will enhance the quality of the data obtained from air pollutant sampling methods.

2.0 Summary of Method

2.1 An integrated sample is extracted from the source and passed through a prepurged heated probe and filter into dilute sulfuric acid and dilute sodium hydroxide solutions which collect the gaseous hydrogen halides and halogens, respectively. The filter collects particulate matter including halide salts but is not routinely recovered and analyzed. The hydrogen halides are solubilized in the acidic solution and form chloride (Cl^-), bromide (Br^-), and fluoride (F^-) ions. The halogens have a very low solubility in the acidic solution and pass through to the alkaline solution where they are hydrolyzed to form a proton (H^+), the halide ion, and the hypohalous acid (HClO or HBrO). Sodium thiosulfate is added in excess to the alkaline solution to assure reaction with the hypohalous acid to form a second halide ion such that 2 halide ions are formed for each molecule of halogen gas. The halide ions in the separate solutions are measured by ion chromatography (IC).

3.0 Definitions [Reserved]

4.0 Interferences

4.1 Volatile materials, such as chlorine dioxide (ClO_2) and ammonium chloride (NH_4Cl), which produce halide ions upon dissolution during sampling are potential interferents. Interferents for the halide measurements are the halogen gases which disproportionate to a hydrogen halide and a hydrohalous acid upon dissolution in water. However, the use of acidic rather than neutral or basic solutions for collection of the hydrogen halides greatly reduces the dissolution of any halogens passing through this solution.

4.2 The simultaneous presence of HBr and CL_2 may cause a positive bias in the HCL result with a corresponding negative bias in the Cl_2 result as well as affecting the HBr/Br_2 split.

4.3 High concentrations of nitrogen oxides (NO_X) may produce sufficient nitrate (NO_3^- to interfere with measurements of very low Br^- levels.

4.4 A glass wool plug should *not* be used to remove particulate matter since a negative bias in the data could result.

4.5 There is anecdotal evidence that HF may be outgassed from new teflon components. If HF is a target analyte, then preconditioning of new teflon components, by heating should be considered.

5.0 Safety

5.1 Disclaimer. This method may involve hazardous materials, operations, and equipment. This test method may not address all of the safety problems associated with its use. It is the responsibility of the user to establish appropriate safety and health practices and determine the applicability of regulatory limitations before performing this test method.

5.2 Corrosive Reagents. The following reagents are hazardous. Personal protective equipment and safe procedures are useful in preventing chemical splashes. If contact occurs, immediately flush with copious amounts of water for at least 15 minutes. Remove clothing under shower and decontaminate. Treat residual chemical burns as thermal burns.

5.2.1 Sodium Hydroxide (NaOH). Causes severe damage to eyes and skin. Inhalation causes irritation to nose, throat, and lungs. Reacts exothermically with limited amounts of water.

5.2.2 Sulfuric Acid (H_2SO_4). Rapidly destructive to body tissue. Will cause third degree burns. Eye damage may result in blindness. Inhalation may be fatal from spasm of the larynx, usually within 30 minutes. May cause lung tissue damage with edema. 1 mg/m^3 for 8 hours will cause lung damage or, in higher concentrations, death. Provide ventilation to limit inhalation. Reacts violently with metals and organics.

6.0 Equipment and Supplies

Note: Mention of trade names or specific products does not constitute endorsement by the Environmental Protection Agency.

6.1 Sampling. The sampling train is shown in Figure 26–1, and component parts are discussed below.

6.1.1 Probe. Borosilicate glass, approximately ⅜-in. (9-mm) I.D. with a heating system to prevent moisture condensation. A Teflon-glass filter in a mat configuration should be installed to remove particulate matter from the gas stream (see Section 6.1.6).

6.1.2 Three-way Stopcock. A borosilicate-glass three-way stopcock with a heating system to prevent moisture condensation. The heated stopcock should connect to the outlet of the heated filter and the inlet of the first impinger. The heating system should be capable of preventing condensation up to the inlet of the first impinger. Silicone grease may be used, if necessary, to prevent leakage.

6.1.3 Impingers. Four 30-ml midget impingers with leak-free glass connectors. Silicone grease may be used, if necessary, to prevent leakage. For sampling at high moisture sources or for sampling times greater than one hour, a midget impinger with a shortened stem (such that the gas sample does not bubble through the collected condensate) should be used in front of the first impinger.

6.1.4 Drying Tube or Impinger. Tube or impinger, of Mae West design, filled with 6- to 16-mesh indicating type silica gel, or equivalent, to dry the gas sample and to protect the dry gas meter and pump. If the silica gel has been used previously, dry at 175 °C (350 °F) for 2 hours. New silica gel may be used as received. Alternatively, other types of desiccants (equivalent or better) may be used.

6.1.5 Heating System. Any heating system capable of maintaining a temperature around the probe and filter holder greater than 120 °C (248 °F) during sampling, or such other temperature as specified by an applicable subpart of the standards or approved by the Administrator for a particular application.

6.1.6 Filter Holder and Support. The filter holder shall be made of Teflon or quartz. The filter support shall be made of Teflon. All Teflon filter holders and supports are available from Savillex Corp., 5325 Hwy 101, Minnetonka, MN 55345.

6.1.7 Sample Line. Leak-free, with compatible fittings to connect the last impinger to the needle valve.

6.1.8 Rate Meter. Rotameter, or equivalent, capable of measuring flow rate to within 2 percent of the selected flow rate of 2 liters/min (0.07 ft^3/min).

6.1.9 Purge Pump, Purge Line, Drying Tube, Needle Valve, and Rate Meter. Pump capable of purging the

sampling probe at 2 liters/min, with drying tube, filled with silica gel or equivalent, to protect pump, and a rate meter capable of measuring 0 to 5 liters/min (0.2 ft^3/min).

6.1.10 Stopcock Grease, Valve, Pump, Volume Meter, Barometer, and Vacuum Gauge. Same as in Method 6, Sections 6.1.1.4, 6.1.1.7, 6.1.1.8, 6.1.1.10, 6.1.2, and 6.1.3.

6.1.11 Temperature Measuring Devices. Temperature sensors to monitor the temperature of the probe and to monitor the temperature of the sampling system from the outlet of the probe to the inlet of the first impinger.

6.1.12 Ice Water Bath. To minimize loss of absorbing solution.

6.2 Sample Recovery.

6.2.1 Wash Bottles. Polyethylene or glass, 500-ml or larger, two.

6.2.2 Storage Bottles. 100- or 250-ml, high-density polyethylene bottles with Teflon screw cap liners to store impinger samples.

6.3 Sample Preparation and Analysis. The materials required for volumetric dilution and chromatographic analysis of samples are described below.

6.3.1 Volumetric Flasks. Class A, 100-ml size.

6.3.2 Volumetric Pipets. Class A, assortment. To dilute samples to the calibration range of the ion chromatograph.

6.3.3 Ion Chromatograph (IC). Suppressed or non-suppressed, with a conductivity detector and electronic integrator operating in the peak area mode. Other detectors, strip chart recorders, and peak height measurements may be used.

7.0 Reagents and Standards

Note: Unless otherwise indicated, all reagents must conform to the specifications established by the Committee on Analytical Reagents of the American Chemical Society (ACS reagent grade). When such specifications are not available, the best available grade shall be used.

7.1 Sampling.

7.1.1 Filter. A 25-mm (1 in) (or other size) Teflon glass mat, Pallflex TX40HI75 (Pallflex Inc., 125 Kennedy Drive, Putnam, CT 06260). This filter is in a mat configuration to prevent fine particulate matter from entering the sampling train. Its composition is 75% Teflon/25% borosilicate glass. Other filters may be used, but they must be in a mat (as opposed to a laminate) configuration and contain at least 75% Teflon. For practical rather than scientific reasons, when the stack gas temperature exceeds 210 °C (410 °F) and the HCl concentration is greater than 20 ppm, a quartz-fiber filter may be used since Teflon becomes unstable above this temperature.

7.1.2 Water. Deionized, distilled water that conforms to American Society of Testing and Materials (ASTM) Specification D 1193–77 or 91, Type 3 (incorporated by reference—see § 60.17).

7.1.3 Acidic Absorbing Solution, 0.1 N Sulfuric Acid (H_2SO_4). To prepare 100 ml of the absorbing solution for the front impinger pair, slowly add 0.28 ml of concentrated H_2SO_4 to about 90 ml of water while stirring, and adjust the final volume to 100 ml using additional water. Shake well to mix the solution.

7.1.4 Silica Gel. Indicating type, 6 to 16 mesh. If previously used, dry at 180 °C (350 °F) for 2 hours. New silica gel may be used as received. Alternatively, other types of desiccants may be used, subject to the approval of the Administrator.

7.1.5 Alkaline Adsorbing Solution, 0.1 N Sodium Hydroxide (NaOH). To prepare 100 ml of the scrubber solution for the third and fourth impinger, dissolve 0.40 g of solid NaOH in about 90 ml of water, and adjust the final solution volume to 100 ml using additional water. Shake well to mix the solution.

7.1.6 Sodium Thiosulfate ($Na_2S_2O_3$ 5 H_2O)

7.2 Sample Preparation and Analysis.

7.2.1 Water. Same as in Section 7.1.2.

7.2.2 Absorbing Solution Blanks. A separate blank solution of each absorbing reagent should be prepared for analysis with the field samples. Dilute 30 ml of each absorbing solution to approximately the same final volume as the field samples using the blank sample of rinse water.

7.2.3 Halide Salt Stock Standard Solutions. Prepare concentrated stock solutions from reagent grade sodium chloride (NaCl), sodium bromide (NaBr), and sodium fluoride (NaF). Each must be dried at 110°C (230°F) for two or more hours and then cooled to room temperature in a desiccator immediately before weighing. Accurately weigh 1.6 to 1.7 g of the dried NaCl to within 0.1 mg, dissolve in water, and dilute to 1 liter. Calculate the exact Cl^- concentration using Equation 26–1 in Section 12.2. In a similar manner, accurately weigh and solubilize 1.2 to 1.3 g of dried NaBr and 2.2 to 2.3 g of NaF to make 1-liter solutions. Use Equations 26–2 and 26–3 in Section 12.2, to calculate the Br^- and F^- concentrations. Alternately, solutions containing a nominal certified concentration of 1000 mg/l NaCl are commercially available as convenient stock solutions from which standards can be made by appropriate volumetric dilution. Refrigerate the stock standard solutions and store no longer than one month.

7.2.4 Chromatographic Eluent. Effective eluents for nonsuppressed IC using a resin-or silica-based weak ion exchange column are a 4 mM potassium hydrogen phthalate solution, adjusted to pH 4.0 using a saturated sodium borate solution, and a 4 mM 4-hydroxy benzoate solution, adjusted to pH 8.6 using 1 N NaOH. An effective eluent for suppressed ion chromatography is a solution containing 3 mM sodium bicarbonate and 2.4 mM sodium carbonate. Other dilute solutions buffered to a similar pH and containing no interfering ions may be used. When using suppressed ion chromatography, if the ''water dip'' resulting from sample injection interferes with the chloride peak, use a 2 mM NaOH/2.4 mM sodium bicarbonate eluent.

7.3 Quality Assurance Audit Samples. When making compliance determinations, and upon availability, audit samples may be obtained from the appropriate EPA regional Office or from the responsible enforcement authority.

Note: The responsible enforcement authority should be notified at least 30 days prior to the test date to allow sufficient time for sample delivery.

8.0 Sample Collection, Preservation, Storage, and Transport

Note: Because of the complexity of this method, testers and analyst should be trained and experienced with the procedure to ensure reliable results.

8.1 Sampling.

8.1.1 Preparation of Collection Train. Prepare the sampling train as follows: Pour 15 ml of the acidic absorbing solution into each one of the first pair of impingers, and 15 ml of the alkaline absorbing solution into each one of the second pair of impingers. Connect the impingers in series with the knockout impinger first, if used, followed by the two impingers containing the acidic absorbing solution and the two impingers containing the alkaline absorbing solution. Place a fresh charge of silica gel, or equivalent, in the drying tube or impinger at the end of the impinger train.

8.1.2 Adjust the probe temperature and the temperature of the filter and the stopcock, *i.e.,* the heated area in Figure 26–1 to a temperature sufficient to prevent water condensation. This temperature should be at least 20 °C (68 °F) above the source temperature, and greater than 120 °C (248 °F). The temperature should be monitored

throughout a sampling run to ensure that the desired temperature is maintained. It is important to maintain a temperature around the probe and filter of greater than 120 °C (248 °F) since it is extremely difficult to purge acid gases off these components. (These components are not quantitatively recovered and hence any collection of acid gases on these components would result in potential undereporting of these emission. The applicable subparts may specify alternative higher temperatures.)

8.1.3 Leak-Check Procedure.

8.1.3.1 Sampling Train. A leak-check prior to the sampling run is optional; however, a leak-check after the sampling run is mandatory. The leak-check procedure is as follows: Temporarily attach a suitable [*e.g.,* 0–40 cc/min (0–2.4 in^3/min)] rotameter to the outlet of the dry gas meter and place a vacuum gauge at or near the probe inlet. Plug the probe inlet, pull a vacuum of at least 250 mm Hg (10 in. Hg), and note the flow rate as indicated by the rotameter. A leakage rate not in excess of 2 percent of the average sampling rate is acceptable.

Note: Carefully release the probe inlet plug before turning off the pump.

8.1.3.2 Pump. It is suggested (not mandatory) that the pump be leak-checked separately, either prior to or after the sampling run. If done prior to the sampling run, the pump leak-check shall precede the leak-check of the sampling train described immediately above; if done after the sampling run, the pump leak-check shall follow the train leak-check. To leak-check the pump, proceed as follows: Disconnect the drying tube from the probe-impinger assembly. Place a vacuum gauge at the inlet to either the drying tube or pump, pull a vacuum of 250 mm (10 in) Hg, plug or pinch off the outlet of the flow meter, and then turn off the pump. The vacuum should remain stable for at least 30 sec. Other leak-check procedures may be used, subject to the approval of the Administrator, U.S. Environmental Protection Agency.

8.1.4 Purge Procedure. Immediately before sampling, connect the purge line to the stopcock, and turn the stopcock to permit the purge pump to purge the probe (see Figure 1A of Figure 26–1). Turn on the purge pump, and adjust the purge rate to 2 liters/min (0.07 ft^3/min). Purge for at least 5 minutes before sampling.

8.1.5 Sample Collection. Turn on the sampling pump, pull a slight vacuum of approximately 25 mm Hg (1 in Hg) on the impinger train, and turn the stopcock to permit stack gas to be pulled through the impinger train (see Figure 1C of Figure 26–1). Adjust the sampling rate to 2 liters/min, as indicated by the rate meter, and maintain this rate to within 10 percent during the entire sampling run. Take readings of the dry gas meter volume and temperature, rate meter, and vacuum gauge at least once every five minutes during the run. A sampling time of one hour is recommended. Shorter sampling times may introduce a significant negative bias in the HCl concentration. At the conclusion of the sampling run, remove the train from the stack, cool, and perform a leak-check as described in Section 8.1.3.1.

8.2 Sample Recovery.

8.2.1 Disconnect the impingers after sampling. Quantitatively transfer the contents of the acid impingers and the knockout impinger, if used, to a leak-free storage bottle. Add the water rinses of each of these impingers and connecting glassware to the storage bottle.

8.2.2 Repeat this procedure for the alkaline impingers and connecting glassware using a separate storage bottle. Add 25 mg of sodium thiosulfate per the product of ppm of halogen anticipated to be in the stack gas times the volume (dscm) of stack gas sampled (0.7 mg per ppm-dscf).

Note: This amount of sodium thiosulfate includes a safety factor of approximately 5 to assure complete reaction with the hypohalous acid to form a second Cl^- ion in the alkaline solution.

8.2.3 Save portions of the absorbing reagents (0.1 N H_2SO_4 and 0.1 N NaOH) equivalent to the amount used in the sampling train (these are the absorbing solution blanks described in Section 7.2.2); dilute to the approximate volume of the corresponding samples using rinse water directly from the wash bottle being used. Add the same amount of sodium thiosulfate solution to the 0.1 N NaOH absorbing solution blank. Also, save a portion of the rinse water used to rinse the sampling train. Place each in a separate, prelabeled storage bottle. The sample storage bottles should be sealed, shaken to mix, and labeled. Mark the fluid level.

8.3 Sample Preparation for Analysis. Note the liquid levels in the storage bottles and confirm on the analysis sheet whether or not leakage occurred during transport. If a noticeable leakage has occurred, either void the sample or use methods, subject to the approval of the Administrator, to correct the final results. Quantitatively transfer the sample solutions to 100-ml volumetric flasks, and dilute to 100 ml with water.

9.0 Quality Control

Section	Quality control measure	Effect
11.2	Audit sample analysis	Evaluate analytical technique, preparation of standards.

10.0 Calibration and Standardization

Note: Maintain a laboratory log of all calibrations.

10.1 Volume Metering System, Temperature Sensors, Rate Meter, and Barometer. Same as in Method 6, Sections 10.1, 10.2, 10.3, and 10.4.

10.2 Ion Chromatograph.

10.2.1 To prepare the calibration standards, dilute given amounts (1.0 ml or greater) of the stock standard solutions to convenient volumes, using 0.1 N H_2SO_4 or 0.1 N NaOH, as appropriate. Prepare at least four calibration standards for each absorbing reagent containing the appropriate stock solutions such that they are within the linear range of the field samples.

10.2.2 Using one of the standards in each series, ensure adequate baseline separation for the peaks of interest.

10.2.3 Inject the appropriate series of calibration standards, starting with the lowest concentration standard first both before and after injection of the quality control check sample, reagent blanks, and field samples. This allows compensation for any instrument drift occurring during sample analysis. The values from duplicate injections of these calibration samples should agree within 5 percent of their mean for the analysis to be valid.

10.2.4 Determine the peak areas, or heights, for the standards and plot individual values versus halide ion concentrations in μg/ml.

10.2.5 Draw a smooth curve through the points. Use linear regression to calculate a formula describing the resulting linear curve.

11.0 Analytical Procedures

11.1 Sample Analysis.

11.1.1 The IC conditions will depend upon analytical column type and whether suppressed or non-

suppressed IC is used. An example chromatogram from a non-suppressed system using a 150-mm Hamilton PRP-X100 anion column, a 2 ml/min flow rate of a 4 mM 4-hydroxy benzoate solution adjusted to a pH of 8.6 using 1 N NaOH, a 50 µl sample loop, and a conductivity detector set on 1.0 µS full scale is shown in Figure 26–2.

11.1.2 Before sample analysis, establish a stable baseline. Next, inject a sample of water, and determine if any Cl^-, Br^-, or F^- appears in the chromatogram. If any of these ions are present, repeat the load/injection procedure until they are no longer present. Analysis of the acid and alkaline absorbing solution samples requires separate standard calibration curves; prepare each according to Section 10.2. Ensure adequate baseline separation of the analyses.

11.1.3 Between injections of the appropriate series of calibration standards, inject in duplicate the reagent blanks, quality control sample, and the field samples. Measure the areas or heights of the Cl^-, Br^-, and F^- peaks. Use the mean response of the duplicate injections to determine the concentrations of the field samples and reagent blanks using the linear calibration curve. The values from duplicate injections should agree within 5 percent of their mean for the analysis to be valid. If the values of duplicate injections are not within 5 percent of the mean, the duplicate injections shall be repeated and all four values used to determine the average response. Dilute any sample and the blank with equal volumes of water if the concentration exceeds that of the highest standard.

11.2 Audit Sample Analysis.

11.2.1 When the method is used to analyze samples to demonstrate compliance with a source emission regulation, a set of two EPA audit samples must be analyzed, subject to availability.

11.2.2 Concurrently analyze the audit samples and the compliance samples in the same manner to evaluate the technique of the analyst and the standards preparation.

11.2.3 The same analyst, analytical reagents, and analytical system shall be used for the compliance samples and the EPA audit samples. If this condition is met, duplicate auditing of subsequent compliance analyses for the same enforcement agency within a 30-day period is waived. An audit sample set may not be used to validate different sets of compliance samples under the jurisdiction of separate enforcement agencies, unless prior arrangements have been made with both enforcement agencies.

11.3 Audit Sample Results.

11.3.1 Calculate the concentrations in mg/L of audit sample and submit results following the instructions provided with the audit samples.

11.3.2 Report the results of the audit samples and the compliance determination samples along with their identification numbers, and the analyst's name to the responsible enforcement authority. Include this information with reports of any subsequent compliance analyses for the same enforcement authority during the 30-day period.

11.3.3 The concentrations of the audit samples obtained by the analyst shall agree within 10 percent of the actual concentrations. If the 10 percent specification is not met, reanalyze the compliance and audit samples, and include initial and reanalysis values in the test report.

11.3.4 Failure to meet the 10 percent specification may require retests until the audit problems are resolved. However, if the audit results do not affect the compliance or noncompliance status of the affected facility, the Administrator may waive the reanalysis requirement, further audits, or retests and accept the results of the compliance test. While steps are being taken to resolve audit analysis problems, the Administrator may also choose to use the data to determine the compliance or noncompliance status of the affected facility.

12.0 Data Analysis and Calculations

Note: Retain at least one extra decimal figure beyond those contained in the available data in intermediate calculations, and round off only the final answer appropriately.

12.1 Nomenclature.

B_X^-=Mass concentration of applicable absorbing solution blank, µg halide ion (Cl^-, Br^-, F^-) /ml, not to exceed 1 µg/ml which is 10 times the published analytical detection limit of 0.1 µg/ml.

C=Concentration of hydrogen halide (HX) or halogen (X_2), dry basis, mg/dscm.

K = 10^{-3} mg/µg.

K_{HCl} = 1.028 (µg HCl/µg-mole)/(µg Cl^-/µg-mole).

K_{HBr} = 1.013 (µg HBr/µg-mole)/(µg Br^-/µg-mole).

K_{HF} = 1.053 (µg HF/µg-mole)/(µg F^-/µg-mole).

m_{HX} = Mass of HCl, HBr, or HF in sample, µg.

m_{X2} = Mass of Cl_2 or Br_2 in sample, µg.

S_X^- = Analysis of sample, µg halide ion (Cl^-, Br^-, F^-)/ml.

$V_{m(std)}$= Dry gas volume measured by the dry gas meter, corrected to standard conditions, dscm.

V_s = Volume of filtered and diluted sample, ml.

12.2 Calculate the exact Cl^-, Br^-, and F^- concentration in the halide salt stock standard solutions using the following equations.

$$\mu g\ Cl^-/ml = g\ of\ NaCl \times 10^3 \times 35.453/58.44 \qquad \text{Eq. 26-1}$$

$$\mu g\ Br^-/ml = g\ of\ NaBr \times 10^3 \times 79.904/102.90 \qquad \text{Eq. 26-2}$$

$$\mu g\ F^-/ml = g\ of\ NaF \times 10^3 \times 18.998/41.99 \qquad \text{Eq. 26-3}$$

12.3 Sample Volume, Dry Basis, Corrected to Standard Conditions. Calculate the sample volume using Eq. 6–1 of Method 6.

12.4 Total µg HCl, HBr, or HF Per Sample.

$$m_{HX} = K_{HCl,Hbr,HF} V_s \left(S_x^- - B_x^-\right) \qquad \text{Eq. 26-4}$$

12.5 Total µg Cl_2 or Br_2 Per Sample.

$$M_{x2} = V_s \left(S_X^- - B_X^-\right) \qquad \text{Eq. 26-5}$$

12.6 Concentration of Hydrogen Halide or Halogen in Flue Gas.

$$C = Km_{XH,X2} / V_{m(std)} \qquad \text{Eq. 26-6}$$

13.0 Method Performance

13.1 Precision and Bias. The within-laboratory relative standard deviations are 6.2 and 3.2 percent at HCl concentrations of 3.9 and 15.3 ppm, respectively. The method does not exhibit a bias to Cl_2 when sampling at concentrations less than 50 ppm.

13.2 Sample Stability. The collected Cl^- samples can be stored for up to 4 weeks.

13.3 Detection Limit. A typical IC instrumental detection limit for Cl^- is 0.2 μg/ml. Detection limits for the other analyses should be similar. Assuming 50 ml liquid recovered from both the acidified impingers, and the basic impingers, and 0.06 dscm of stack gas sampled, then the analytical detection limit in the stack gas would be about 0.1 ppm for HCl and Cl_2, respectively.

14.0 Pollution Prevention [Reserved]

15.0 Waste Management [Reserved]

16.0 References

1. Steinsberger, S. C. and J. H. Margeson, ''Laboratory and Field Evaluation of a Methodology for Determination of Hydrogen Chloride Emissions from Municipal and Hazardous Waste Incinerators,'' U.S. Environmental Protection Agency, Office of Research and Development, Report No. 600/3–89/064, April 1989. Available from the National Technical Information Service, Springfield, VA 22161 as PB89220586/AS.

2. State of California, Air Resources Board, Method 421, ''Determination of Hydrochloric Acid Emissions from Stationary Sources,'' March 18, 1987.

3. Cheney, J.L. and C.R. Fortune. Improvements in the Methodology for Measuring Hydrochloric Acid in Combustion Source Emissions. J. Environ. Sci. Health. *A19*(3): 337–350. 1984.

4. Stern, D. A., B. M. Myatt, J. F. Lachowski, and K. T. McGregor. Speciation of Halogen and Hydrogen Halide Compounds in Gaseous Emissions. In: Incineration and Treatment of Hazardous Waste: Proceedings of the 9th Annual Research Symposium, Cincinnati, Ohio, May 2–4, 1983. Publication No. 600/9–84–015. July 1984. Available from National Technical Information Service, Springfield, VA 22161 as PB84–234525.

5. Holm, R. D. and S. A. Barksdale. Analysis of Anions in Combustion Products. In: Ion Chromatographic Analysis of Environmental Pollutants. E. Sawicki, J. D. Mulik, and E. Wittgenstein (eds.). Ann Arbor, Michigan, Ann Arbor Science Publishers. 1978. pp. 99–110.

BILLING CODE 6560–50–P

17.0 Tables, Diagrams, Flowcharts, and Validation Data

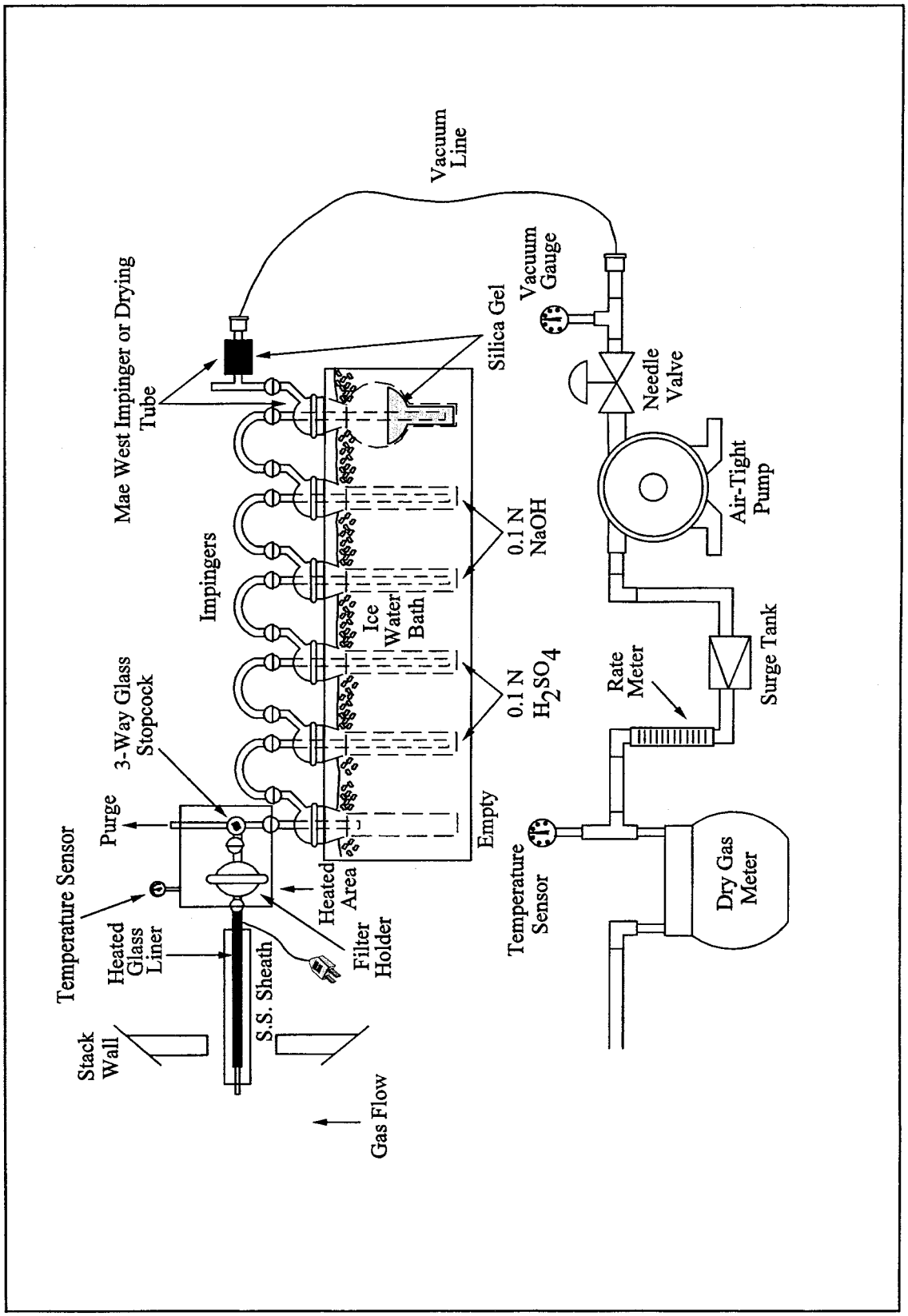

Figure 26-1. Sampling Train.

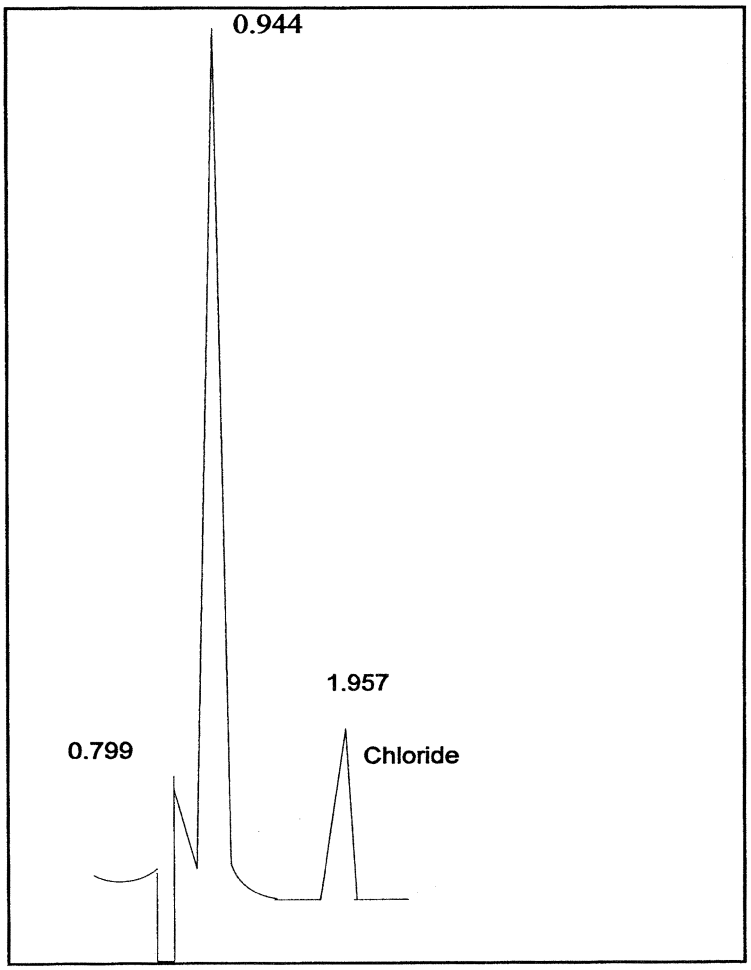

Figure 26-2. Example Chromatogram.

BILLING CODE 6560–50–C

Method 26A—Determination of Hydrogen Halide and Halogen Emissions From Stationary Sources Isokinetic Method

Note: This method does not include all of the specifications (*e.g.* equipment and supplies) and procedures (*e.g.* sampling and analytical) essential to its performance. Some material is incorporated by reference from other methods in this part. Therefore, to obtain reliable results, persons using this method should have a thorough knowledge of at least the following additional test methods: Method 2, Method 5, and Method 26.

1.0 Scope and Application

1.1 Analytes.

Analytes	CAS No.
Hydrogen Chloride (HCl)	7647–01–0
Hydrogen Bromide (HBr)	10035–10–6
Hydrogen Fluoride (HF)	7664–39–3
Chlorine (Cl_2)	7882–50–5
Bromine (Br_2)	7726–95–6

1.2 This method is applicable for determining emissions of hydrogen halides (HX) [HCl, HBr, and HF] and halogens (X_2) [Cl_2 and Br_2] from stationary sources when specified by the applicable subpart. This method collects the emission sample isokinetically and is therefore particularly suited for sampling at sources, such as those controlled by wet scrubbers, emitting acid particulate matter (*e.g.*, hydrogen halides dissolved in water droplets).

1.3 Data Quality Objectives. Adherence to the requirements of this method will enhance the quality of the data obtained from air pollutant sampling methods.

2.0 Summary of Method

2.1 Principle. Gaseous and particulate pollutants are withdrawn isokinetically from the source and collected in an optional cyclone, on a filter, and in absorbing solutions. The cyclone collects any liquid droplets and is not necessary if the source emissions do not contain them; however, it is preferable to include the cyclone in the sampling train to protect the filter from any liquid present. The filter collects particulate matter including halide salts but is not routinely recovered or analyzed. Acidic and alkaline absorbing solutions collect the gaseous hydrogen halides and halogens, respectively. Following sampling of emissions containing liquid droplets, any halides/halogens dissolved in the liquid in the cyclone and on the filter are vaporized to gas and collected in the impingers by pulling conditioned ambient air through the sampling train. The hydrogen halides are solubilized in the acidic solution and form chloride (Cl^-), bromide (Br^-), and fluoride (F^-) ions. The halogens have a very low solubility in the acidic solution and pass through to the alkaline solution where they are hydrolyzed to form a proton (H^+), the halide ion, and the hypohalous acid (HClO or HBrO). Sodium thiosulfate is added to the alkaline solution to assure reaction with the hypohalous acid to form a second halide ion such that 2 halide ions are formed for each molecule of halogen gas. The halide ions in the separate solutions are measured by ion chromatography (IC). If desired, the particulate matter recovered

from the filter and the probe is analyzed following the procedures in Method 5.

Note: If the tester intends to use this sampling arrangement to sample concurrently for particulate matter, the alternative Teflon probe liner, cyclone, and filter holder should not be used. The Teflon filter support must be used. The tester must also meet the probe and filter temperature requirements of both sampling trains.

3.0 Definitions. [Reserved]

4.0 Interferences

4.1 Volatile materials, such as chlorine dioxide (ClO_2) and ammonium chloride (NH_4Cl), which produce halide ions upon dissolution during sampling are potential interferents. Interferents for the halide measurements are the halogen gases which disproportionate to a hydrogen halide and an hypohalous acid upon dissolution in water. The use of acidic rather than neutral or basic solutions for collection of the hydrogen halides greatly reduces the dissolution of any halogens passing through this solution.

4.2 The simultaneous presence of both HBr and Cl_2 may cause a positive bias in the HCl result with a corresponding negative bias in the Cl_2 result as well as affecting the HBr/Br_2 split.

4.3 High concentrations of nitrogen oxides (NO_X) may produce sufficient nitrate (NO_3^-) to interfere with measurements of very low Br^- levels.

4.4 There is anecdotal evidence that HF may be outgassed from new Teflon components. If HF is a target analyte then preconditioning of new Teflon components, by heating, should be considered.

5.0 Safety

5.1 Disclaimer. This method may involve hazardous materials, operations, and equipment. This test method may not address all of the safety problems associated with its use. It is the responsibility of the user to establish appropriate safety and health practices and determine the applicability of regulatory limitations before performing this test method.

5.2 Corrosive Reagents. The following reagents are hazardous. Personal protective equipment and safe procedures are useful in preventing chemical splashes. If contact occurs, immediately flush with copious amounts of water for at least 15 minutes. Remove clothing under shower and decontaminate. Treat residual chemical burns as thermal burns.

5.2.1 Sodium Hydroxide (NaOH). Causes severe damage to eyes and skin. Inhalation causes irritation to nose, throat, and lungs. Reacts exothermically with limited amounts of water.

5.2.2 Sulfuric Acid (H_2SO_4). Rapidly destructive to body tissue. Will cause third degree burns. Eye damage may result in blindness. Inhalation may be fatal from spasm of the larynx, usually within 30 minutes. May cause lung tissue damage with edema. 1 mg/m^3 for 8 hours will cause lung damage or, in higher concentrations, death. Provide ventilation to limit inhalation. Reacts violently with metals and organics.

6.0. Equipment and Supplies

Note: Mention of trade names or specific products does not constitute endorsement by the Environmental Protection Agency.

6.1 Sampling. The sampling train is shown in Figure 26A–1; the apparatus is similar to the Method 5 train where noted as follows:

6.1.1 Probe Nozzle. Borosilicate or quartz glass; constructed and calibrated according to Method 5, Sections 6.1.1.1 and 10.1, and coupled to the probe liner using a Teflon union; a stainless steel nut is recommended for this union. When the stack temperature exceeds 210 °C (410 °F), a one-piece glass nozzle/liner assembly must be used.

6.1.2 Probe Liner. Same as Method 5, Section 6.1.1.2, except metal liners shall not be used. Water-cooling of the stainless steel sheath is recommended at temperatures exceeding 500 °C (932 °F). Teflon may be used in limited applications where the minimum stack temperature exceeds 120 °C (250 °F) but never exceeds the temperature where Teflon is estimated to become unstable [approximately 210 °C (410 °F)].

6.1.3 Pitot Tube, Differential Pressure Gauge, Filter Heating System, Metering System, Barometer, Gas Density Determination Equipment. Same as Method 5, Sections 6.1.1.3, 6.1.1.4, 6.1.1.6, 6.1.1.9, 6.1.2, and 6.1.3.

6.1.4 Cyclone (Optional). Glass or Teflon. Use of the cyclone is required only when the sample gas stream is saturated with moisture; however, the cyclone is recommended to protect the filter from any liquid droplets present.

6.1.5 Filter Holder. Borosilicate or quartz glass, or Teflon filter holder, with a Teflon filter support and a sealing gasket. The sealing gasket shall be constructed of Teflon or equivalent materials. The holder design shall provide a positive seal against leakage at any point along the filter circumference. The holder shall be attached immediately to the outlet of the cyclone.

6.1.6 Impinger Train. The following system shall be used to determine the stack gas moisture content and to collect the hydrogen halides and halogens: five or six impingers connected in series with leak-free ground glass fittings or any similar leak-free noncontaminating fittings. The first impinger shown in Figure 26A–1 (knockout or condensate impinger) is optional and is recommended as a water knockout trap for use under high moisture conditions. If used, this impinger should be constructed as described below for the alkaline impingers, but with a shortened stem, and should contain 50 ml of 0.1 N H_2SO_4. The following two impingers (acid impingers which each contain 100 ml of 0.1 N H_2SO_4) shall be of the Greenburg-Smith design with the standard tip (Method 5, Section 6.1.1.8). The next two impingers (alkaline impingers which each contain 100 ml of 0.1 N NaOH) and the last impinger (containing silica gel) shall be of the modified Greenburg-Smith design (Method 5, Section 6.1.1.8). The condensate, acid, and alkaline impingers shall contain known quantities of the appropriate absorbing reagents. The last impinger shall contain a known weight of silica gel or equivalent desiccant. Teflon impingers are an acceptable alternative.

6.1.7 Heating System. Any heating system capable of maintaining a temperature around the probe and filter holder greater than 120 °C (248 °F) during sampling, or such other temperature as specified by an applicable subpart of the standards or approved by the Administrator for a particular application.

6.1.8 Ambient Air Conditioning Tube (Optional). Tube tightly packed with approximately 150 g of fresh 8 to 20 mesh sodium hydroxide-coated silica, or equivalent, (Ascarite II has been found suitable) to dry and remove acid gases from the ambient air used to remove moisture from the filter and cyclone, when the cyclone is used. The inlet and outlet ends of the tube should be packed with at least 1-cm thickness of glass wool or filter material suitable to prevent escape of fines. Fit one end with flexible tubing, etc. to allow connection to probe nozzle following the test run.

6.2 Sample Recovery.

6.2.1 Probe-Liner and Probe-Nozzle Brushes, Wash Bottles, Glass Sample Storage Containers, Petri Dishes, Graduated Cylinder and/or Balance, and Rubber Policeman. Same as Method 5, Sections 6.2.1, 6.2.2, 6.2.3, 6.2.4, 6.2.5, and 6.2.7.

6.2.2 Plastic Storage Containers. Screw-cap polypropylene or polyethylene containers to store silica gel. High-density polyethylene bottles with Teflon screw cap liners to store impinger reagents, 1-liter.

6.2.3 Funnels. Glass or high-density polyethylene, to aid in sample recovery.

6.3 Sample Preparation and Analysis.

6.3.1 Volumetric Flasks. Class A, various sizes.

6.3.2 Volumetric Pipettes. Class A, assortment. To dilute samples to calibration range of the ion chromatograph (IC).

6.3.3 Ion Chromatograph (IC). Suppressed or nonsuppressed, with a conductivity detector and electronic integrator operating in the peak area mode. Other detectors, a strip chart recorder, and peak heights may be used.

7.0 Reagents and Standards

Note: Unless otherwise indicated, all reagents must conform to the specifications established by the Committee on Analytical Reagents of the American Chemical Society (ACS reagent grade). When such specifications are not available, the best available grade shall be used.

7.1 Sampling.

7.1.1 Filter. Teflon mat (*e.g.*, Pallflex TX40HI45) filter. When the stack gas temperature exceeds 210°C (410°F) a quartz fiber filter may be used.

7.1.2 Water. Deionized, distilled water that conforms to American Society of Testing and Materials (ASTM) Specification D 1193–77 or 91, Type 3 (incorporated by reference—see § 60.17).

7.1.3 Acidic Absorbing Solution, 0.1 N Sulfuric Acid (H_2SO_4). To prepare 1 L, slowly add 2.80 ml of concentrated 17.9 M H2SO4 to about 900 ml of water while stirring, and adjust the final volume to 1 L using additional water. Shake well to mix the solution.

7.1.4 Silica Gel, Crushed Ice, and Stopcock Grease. Same as Method 5, Sections 7.1.2, 7.1.4, and 7.1.5, respectively.

7.1.5 Alkaline Absorbing Solution, 0.1 N Sodium Hydroxide (NaOH). To prepare 1 L, dissolve 4.00 g of solid NaOH in about 900 ml of water and adjust the final volume to 1 L using additional water. Shake well to mix the solution.

7.1.6 Sodium Thiosulfate, ($Na_2S_2O_3 3{\cdot}5\ H_2O$).

7.2 Sample Preparation and Analysis.

7.2.1 Water. Same as in Section 7.1.2.

7.2.2 Absorbing Solution Blanks. A separate blank solution of each absorbing reagent should be prepared for analysis with the field samples. Dilute 200 ml of each absorbing solution (250 ml of the acidic absorbing solution, if a condensate impinger is used) to the same final volume as the field samples using the blank sample of rinse water. If a particulate determination is conducted, collect a blank sample of acetone.

7.2.3 Halide Salt Stock Standard Solutions. Prepare concentrated stock solutions from reagent grade sodium chloride (NaCl), sodium bromide (NaBr), and sodium fluoride (NaF). Each must be dried at 110°C (230°F) for two or more hours and then cooled to room temperature in a desiccator immediately before weighing. Accurately weigh 1.6 to 1.7 g of the dried NaCl to within 0.1 mg, dissolve in water, and dilute to 1 liter. Calculate the exact Cl^- concentration using Equation 26A–1 in Section 12.2. In a similar manner, accurately weigh and solubilize 1.2 to 1.3 g of dried NaBr and 2.2 to 2.3 g of NaF to make 1-liter solutions. Use Equations 26A–2 and 26A–3 in Section 12.2, to calculate the Br^- and F^- concentrations. Alternately, solutions containing a nominal certified concentration of 1000 mg/L NaCl are commercially available as convenient stock solutions from which standards can be made by appropriate volumetric dilution. Refrigerate the stock standard solutions and store no longer than one month.

7.2.4 Chromatographic Eluent. Same as Method 26, Section 7.2.4.

7.2.5 Water. Same as Section 7.1.1.

7.2.6 Acetone. Same as Method 5, Section 7.2.

7.3 Quality Assurance Audit Samples. When making compliance determinations, and upon availability, audit samples may be obtained from the appropriate EPA regional Office or from the responsible enforcement authority.

Note: The responsible enforcement authority should be notified at least 30 days prior to the test date to allow sufficient time for sample delivery.

8.0 Sample Collection, Preservation, Storage, and Transport

Note: Because of the complexity of this method, testers and analysts should be trained and experienced with the procedures to ensure reliable results.

8.1 Sampling.

8.1.1 Pretest Preparation. Follow the general procedure given in Method 5, Section 8.1, except the filter need only be desiccated and weighed if a particulate determination will be conducted.

8.1.2 Preliminary Determinations. Same as Method 5, Section 8.2.

8.1.3 Preparation of Sampling Train. Follow the general procedure given in Method 5, Section 8.1.3, except for the following variations: Add 50 ml of 0.1 N H_2SO_4 to the condensate impinger, if used. Place 100 ml of 0.1 N H_2SO_4 in each of the next two impingers. Place 100 ml of 0.1 N NaOH in each of the following two impingers. Finally, transfer approximately 200–300 g of preweighed silica gel from its container to the last impinger. Set up the train as in Figure 26A–1. When used, the optional cyclone is inserted between the probe liner and filter holder and located in the heated filter box.

8.1.4 Leak-Check Procedures. Follow the leak-check procedures given in Method 5, Sections 8.4.2 (Pretest Leak-Check), 8.4.3 (Leak-Checks During the Sample Run), and 8.4.4 (Post-Test Leak-Check).

8.1.5 Sampling Train Operation. Follow the general procedure given in Method 5, Section 8.5. It is important to maintain a temperature around the probe, filter (and cyclone, if used) of greater than 120°C (248 °F) since it is extremely difficult to purge acid gases off these components. (These components are not quantitatively recovered and hence any collection of acid gases on these components would result in potential undereporting these emissions. The applicable subparts may specify alternative higher temperatures.) For each run, record the data required on a data sheet such as the one shown in Method 5, Figure 5–3. If the condensate impinger becomes too full, it may be emptied, recharged with 50 ml of 0.1 N H_2SO_4, and replaced during the sample run. The condensate emptied must be saved and included in the measurement of the volume of moisture collected and included in the sample for analysis. The additional 50 ml of absorbing reagent must also be considered in calculating the moisture. Before the sampling train integrity is compromised by removing the impinger, conduct a leak-check as described in Method 5, Section 8.4.2.

8.1.6 Post-Test Moisture Removal (Optional). When the optional cyclone is included in the sampling train or when liquid is visible on the filter at the end of a sample run even in the absence of a cyclone, perform the following procedure. Upon completion of the test run, connect the ambient air conditioning tube at the probe inlet and operate the train with the filter heating system at least 120°C (248 °F) at a low flow rate (*e.g.,* ΔH = 1 in. H_2O) to vaporize any liquid and hydrogen halides in the cyclone or on the filter and pull them through the train into the impingers. After 30 minutes, turn off the flow, remove the conditioning tube, and examine the cyclone and filter for any visible liquid. If liquid is visible, repeat this step for 15 minutes and observe again. Keep repeating until the cyclone is dry.

Note: It is critical that this is repeated until the cyclone is completely dry.

8.2 Sample Recovery. Allow the probe to cool. When the probe can be handled safely, wipe off all the external surfaces of the tip of the probe nozzle and place a cap loosely over the tip to prevent gaining or losing particulate matter. Do not cap the probe tip tightly while the sampling train is cooling down because this will create a vacuum in the filter holder, drawing water from the impingers into the holder. Before moving the sampling train to the cleanup site, remove the probe from the sample train, wipe off any silicone grease, and cap the open outlet of the impinger train, being careful not to lose any condensate that might be present. Wipe off any silicone grease and cap the filter or cyclone inlet. Remove the umbilical cord from the last impinger and cap the impinger. If a flexible line is used between the first impinger and the filter holder, disconnect it at the filter holder and let any condensed water drain into the first impinger. Wipe off any silicone grease and cap the filter holder outlet and the impinger inlet. Ground glass stoppers, plastic caps, serum caps, Teflon tape, Parafilm, or aluminum foil may be used to close these openings. Transfer the probe and filter/impinger assembly to the cleanup area. This area should be clean and protected from the weather to minimize sample contamination or loss. Inspect the train prior to and during disassembly and note any abnormal conditions. Treat samples as follows:

8.2.1 Container No. 1 (Optional; Filter Catch for Particulate Determination). Same as Method 5, Section 8.7.6.1, Container No. 1.

8.2.2 Container No. 2 (Optional; Front-Half Rinse for Particulate Determination). Same as Method 5, Section 8.7.6.2, Container No. 2.

8.2.3 Container No. 3 (Knockout and Acid Impinger Catch for Moisture and Hydrogen Halide Determination). Disconnect the impingers. Measure the liquid in the acid and knockout impingers to ±1 ml by using a graduated cylinder or by weighing it to ±0.5 g by using a balance. Record the volume or weight of liquid present. This information is required to calculate the moisture content of the effluent gas. Quantitatively transfer this liquid to a leak-free sample storage container. Rinse these impingers and connecting glassware including the back portion of the filter holder (and flexible tubing, if used) with water and add these rinses to the storage container. Seal the container, shake to mix, and label. The fluid level should be marked so that if any sample is lost during transport, a correction proportional to the lost volume can be applied. Retain rinse water and acidic absorbing solution blanks to be analyzed with the samples.

8.2.4 Container No. 4 (Alkaline Impinger Catch for Halogen and Moisture Determination). Measure and record the liquid in the alkaline impingers as described in Section 8.2.3. Quantitatively transfer this liquid to a leak-free sample storage container. Rinse these two impingers and connecting glassware with water and add these rinses to the container. Add 25 mg of sodium thiosulfate per ppm halogen anticipated to be in the stack gas multiplied by the volume (dscm) of stack gas sampled (0.7 mg/ppm-dscf). Seal the container, shake to mix, and label; mark the fluid level. Retain alkaline absorbing solution blank to be analyzed with the samples.

Note: 25 mg per sodium thiosulfate per ppm halogen anticipated to be in the stack includes a safety factor of approximately 5 to assure complete reaction with the hypohalous acid to form a second Cl^- ion in the alkaline solution.

8.2.5 Container No. 5 (Silica Gel for Moisture Determination). Same as Method 5, Section 8.7.6.3, Container No. 3.

8.2.6 Container Nos. 6 through 9 (Reagent Blanks). Save portions of the absorbing reagents (0.1 N H_2SO_4 and 0.1 N NaOH) equivalent to the amount used in the sampling train; dilute to the approximate volume of the corresponding samples using rinse water directly from the wash bottle being used. Add the same ratio of sodium thiosulfate solution used in container No. 4 to the 0.1 N NaOH absorbing reagent blank. Also, save a portion of the rinse water alone and a portion of the acetone equivalent to the amount used to rinse the front half of the sampling train. Place each in a separate, prelabeled sample container.

8.2.7 Prior to shipment, recheck all sample containers to ensure that the caps are well-secured. Seal the lids of all containers around the circumference with Teflon tape. Ship all liquid samples upright and all particulate filters with the particulate catch facing upward.

9.0 Quality Control

9.1 Miscellaneous Quality Control Measures.

Section	Quality control measure	Effect
8.1.4, 10.1	Sampling equipment leak-check and calibration.	Ensure accurate measurement of stack gas flow rate, sample volume.
11.5	Audit sample analysis	Evaluate analyst's technique and standards preparation.

9.1 Volume Metering System Checks. Same as Method 5, Section 9.2.

10.0 Calibration and Standardization

Note: Maintain a laboratory log of all calibrations.

10.1 Probe Nozzle, Pitot Tube Assembly, Dry Gas Metering System, Probe Heater, Temperature Sensors, Leak-Check of Metering System, and Barometer. Same as Method 5, Sections 10.1, 10.2, 10.3, 10.4, 10.5, 8.4.1, and 10.6, respectively.

10.2 Ion Chromatograph.

10.2.1 To prepare the calibration standards, dilute given amounts (1.0 ml or greater) of the stock standard solutions to convenient volumes, using 0.1 N H_2SO_4 or 0.1 N NaOH, as appropriate. Prepare at least four calibration standards for each absorbing reagent containing the three stock solutions such that they are within the linear range of the field samples.

10.2.2 Using one of the standards in each series, ensure adequate baseline separation for the peaks of interest.

10.2.3 Inject the appropriate series of calibration standards, starting with the lowest concentration standard first both before and after injection of the quality control check sample, reagent blanks, and field samples. This allows compensation for any instrument drift occurring during sample analysis. The values from duplicate injections of these calibration samples should agree within 5 percent of their mean for the analysis to be valid.

10.2.4 Determine the peak areas, or height, of the standards and plot individual values versus halide ion concentrations in μg/ml.

10.2.5 Draw a smooth curve through the points. Use linear regression to calculate a formula describing the resulting linear curve.

11.0 Analytical Procedures

Note: the liquid levels in the sample containers and confirm on the analysis sheet

whether or not leakage occurred during transport. If a noticeable leakage has occurred, either void the sample or use methods, subject to the approval of the Administrator, to correct the final results.

11.1 Sample Analysis.

11.1.1 The IC conditions will depend upon analytical column type and whether suppressed or non-suppressed IC is used. An example chromatogram from a non-suppressed system using a 150-mm Hamilton PRP-X100 anion column, a 2 ml/min flow rate of a 4 mM 4-hydroxy benzoate solution adjusted to a pH of 8.6 using 1 N NaOH, a 50 µl sample loop, and a conductivity detector set on 1.0 µS full scale is shown in Figure 26–2.

11.1.2 Before sample analysis, establish a stable baseline. Next, inject a sample of water, and determine if any Cl^-, Br^-, or F^- appears in the chromatogram. If any of these ions are present, repeat the load/injection procedure until they are no longer present. Analysis of the acid and alkaline absorbing solution samples requires separate standard calibration curves; prepare each according to Section 10.2. Ensure adequate baseline separation of the analyses.

11.1.3 Between injections of the appropriate series of calibration standards, inject in duplicate the reagent blanks, quality control sample, and the field samples. Measure the areas or heights of the Cl^-, Br^-, and F^- peaks. Use the mean response of the duplicate injections to determine the concentrations of the field samples and reagent blanks using the linear calibration curve. The values from duplicate injections should agree within 5 percent of their mean for the analysis to be valid. If the values of duplicate injections are not within 5 percent of the mean, the duplicator injections shall be repeated and all four values used to determine the average response. Dilute any sample and the blank with equal volumes of water if the concentration exceeds that of the highest standard.

11.2 Container Nos. 1 and 2 and Acetone Blank (Optional; Particulate Determination). Same as Method 5, Sections 11.2.1 and 11.2.2, respectively.

11.3 Container No. 5. Same as Method 5, Section 11.2.3 for silica gel.

11.4 Audit Sample Analysis.

11.4.1 When the method is used to analyze samples to demonstrate compliance with a source emission regulation, a set of two EPA audit samples must be analyzed, subject to availability.

11.4.2 Concurrently analyze the audit samples and the compliance samples in the same manner to evaluate the technique of the analyst and the standards preparation.

11.4.3 The same analyst, analytical reagents, and analytical system shall be used for the compliance samples and the EPA audit samples. If this condition is met, duplicate auditing of subsequent compliance analyses for the same enforcement agency within a 30-day period is waived. An audit sample set may not be used to validate different sets of compliance samples under the jurisdiction of separate enforcement agencies, unless prior arrangements have been made with both enforcement agencies.

11.5 Audit Sample Results.

11.5.1 Calculate the concentrations in mg/L of audit sample and submit results following the instructions provided with the audit samples.

11.5.2 Report the results of the audit samples and the compliance determination samples along with their identification numbers, and the analyst's name to the responsible enforcement authority. Include this information with reports of any subsequent compliance analyses for the same enforcement authority during the 30-day period.

11.5.3 The concentrations of the audit samples obtained by the analyst shall agree within 10 percent of the actual concentrations. If the 10 percent specification is not met, reanalyze the compliance and audit samples, and include initial and reanalysis values in the test report.

11.5.4 Failure to meet the 10 percent specification may require retests until the audit problems are resolved. However, if the audit results do not affect the compliance or noncompliance status of the affected facility, the Administrator may waive the reanalysis requirement, further audits, or retests and accept the results of the compliance test. While steps are being taken to resolve audit analysis problems, the Administrator may also choose to use the data to determine the compliance or noncompliance status of the affected facility.

12.0 Data Analysis and Calculations

Note: Retain at least one extra decimal figure beyond those contained in the available data in intermediate calculations, and round off only the final answer appropriately.

12.1 Nomenclature. Same as Method 5, Section 12.1. In addition:

B_{X-} = Mass concentration of applicable absorbing solution blank, µg halide ion (Cl^-, Br^-, F^-)/ml, not to exceed 1 µg/ml which is 10 times the published analytical detection limit of 0.1 µg/ml. (It is also approximately 5 percent of the mass concentration anticipated to result from a one hour sample at 10 ppmv HCl.)

C = Concentration of hydrogen halide (HX) or halogen (X_2), dry basis, mg/dscm.

K = 10^{-3} mg/µg.

K_{HCl} = 1.028 (µg HCl/µg-mole)/(µg Cl^-/µg-mole).

K_{HBr} = 1.013 (µg HBr/µg-mole)/(µg Br^-/µg-mole).

K_{HF} = 1.053 (µg HF/µg-mole)/(µg F^-/µg-mole).

m_{HX} = Mass of HCl, HBr, or HF in sample, ug.

m_{X2} = Mass of Cl_2 or Br_2 in sample, ug.

S_{X-} = Analysis of sample, ug halide ion (Cl^-, Br^-, F^-)/ml.

V_s = Volume of filtered and diluted sample, ml.

12.2 Calculate the exact Cl^-, Br^-, and F^- concentration in the halide salt stock standard solutions using the following equations.

$$\mu g\ Cl^-/ml = g\ of\ NaCl \times 10^3 \times 35.453/58.44 \qquad \text{Eq. 26A-1}$$

$$\mu g\ Br^-/ml = g\ of\ NaBr \times 10^3 \times 79.904/102.90 \qquad \text{Eq. 26A-2}$$

$$\mu g\ F^-/ml = g\ of\ NaF \times 10^3 \times 18.998/41.99 \qquad \text{Eq. 26A-3}$$

12.3 Average Dry Gas Meter Temperature and Average Orifice Pressure Drop. See data sheet (Figure 5–3 of Method 5).

12.4 Dry Gas Volume. Calculate $V_{m(std)}$ and adjust for leakage, if necessary, using the equation in Section 12.3 of Method 5.

12.5 Volume of Water Vapor and Moisture Content. Calculate the volume of water vapor $V_{w(std)}$ and moisture content B_{ws} from the data obtained in this method (Figure 5–3 of Method 5); use Equations 5–2 and 5–3 of Method 5.

12.6 Isokinetic Variation and Acceptable Results. Use Method 5, Section 12.11.

12.7 Acetone Blank Concentration, Acetone Wash Blank Residue Weight, Particulate Weight, and Particulate Concentration. For particulate determination.

12.8 Total µg HCl, HBr, or HF Per Sample.

$$m_{HX} = K_{HC1,Hbr,HF} V_s \left(S_{X^-} - B_{X^-} \right) \qquad \text{Eq. 26A-4}$$

12.9 Total µg Cl_2 or Br_2 Per Sample.

$$m_{X2} = V_s \left(S_{X^-} - B_{X^-} \right) \qquad \text{Eq. 26A-5}$$

12.10 Concentration of Hydrogen Halide or Halogen in Flue Gas.

$$C = K\, m_{HX,X2} / V_{m(std)} \qquad \text{Eq. 26A-6}$$

12.11 Stack Gas Velocity and Volumetric Flow Rate. Calculate the average stack gas velocity and volumetric flow rate, if needed, using data obtained in this method and the equations in Sections 12.3 and 12.4 of Method 2.

3.0 Method Performance

13.1 Precision and Bias. The method has a possible measurable negative bias below 20 ppm HCl perhaps due to reaction with small amounts of moisture in the probe and filter. Similar bias for the other hydrogen halides is possible.

13.2 Sample Stability. The collected Cl-samples can be stored for up to 4 weeks for analysis for HCl and Cl2.

13.3 Detection Limit. A typical analytical detection limit for HCl is 0.2 µg/ml. Detection limits for the other analyses should be similar. Assuming 300 ml of liquid recovered for the acidified impingers and a similar amounts recovered from the basic impingers, and 1 dscm of stack gas sampled, the analytical detection limits in the stack gas would be about 0.04 ppm for HCl and Cl2, respectively.

14.0 Pollution Prevention, [Reserved]

15.0 Waste Management, [Reserved]

16.0 References

1. Steinsberger, S. C. and J. H. Margeson. Laboratory and Field Evaluation of a Methodology for Determination of Hydrogen Chloride Emissions from Municipal and Hazardous Waste Incinerators. U.S. Environmental Protection Agency, Office of Research and Development. Publication No. 600/3–89/064. April 1989. Available from National Technical Information Service, Springfield, VA 22161 as PB89220586/AS.

2. State of California Air Resources Board. Method 421—Determination of Hydrochloric Acid Emissions from Stationary Sources. March 18, 1987.

3. Cheney, J.L. and C.R. Fortune. Improvements in the Methodology for Measuring Hydrochloric Acid in Combustion Source Emissions. J. Environ. Sci. Health. *A19*(3): 337–350. 1984.

4. Stern, D.A., B.M. Myatt, J.F. Lachowski, and K.T. McGregor. Speciation of Halogen and Hydrogen Halide Compounds in Gaseous Emissions. In: Incineration and Treatment of Hazardous Waste: Proceedings of the 9th Annual Research Symposium, Cincinnati, Ohio, May 2–4, 1983. Publication No. 600/9–84–015. July 1984. Available from National Technical Information Service, Springfield, VA 22161 as PB84–234525.

5. Holm, R.D. and S.A. Barksdale. Analysis of Anions in Combustion Products. In: Ion Chromatographic Analysis of Environmental Pollutants, E. Sawicki, J.D. Mulik, and E. Wittgenstein (eds.). Ann Arbor, Michigan, Ann Arbor Science Publishers. 1978. pp. 99–110.

BILLING CODE 6560–50–P

17.0 Tables, Diagrams, Flowcharts, and Validation Data

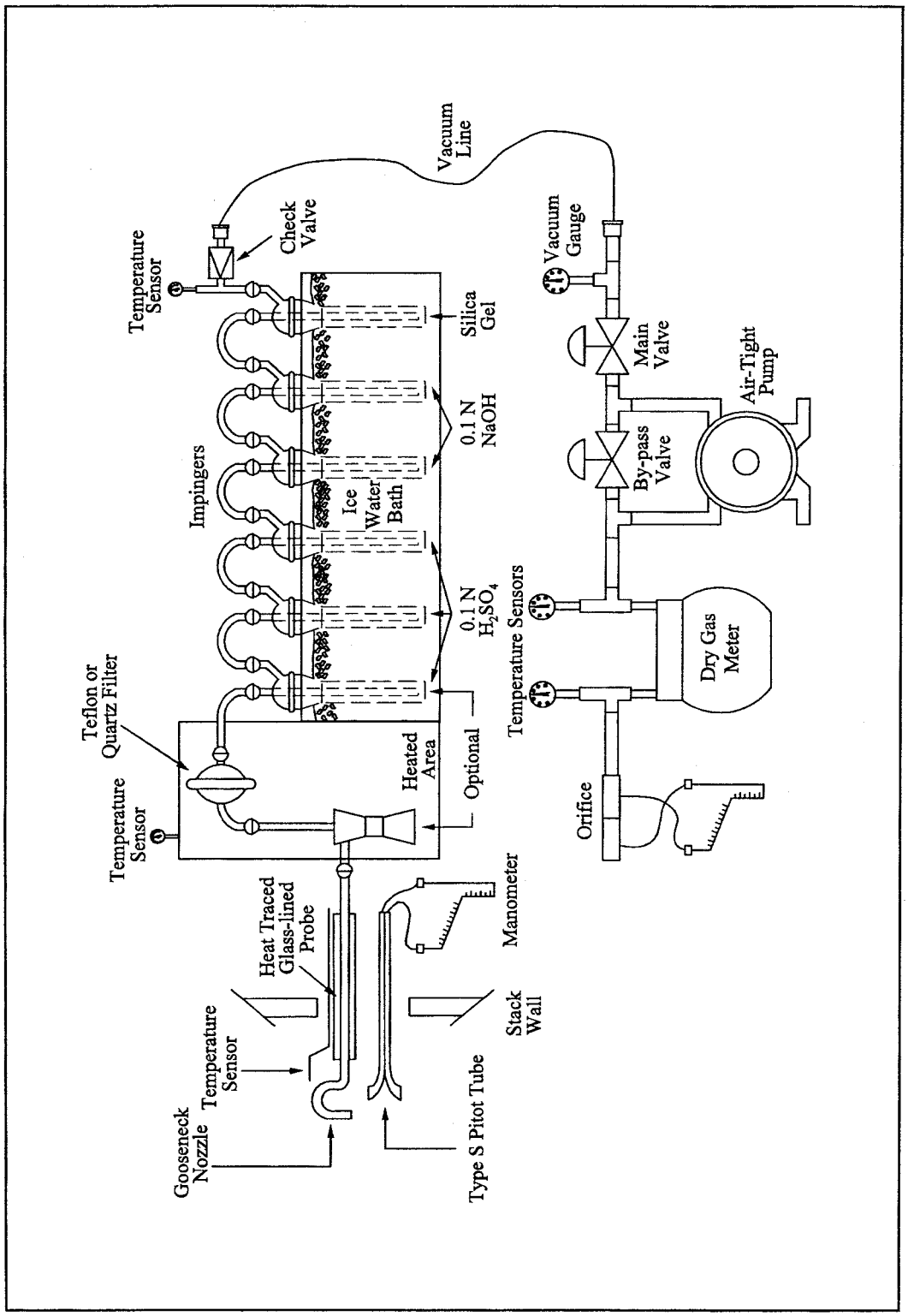

Figure 26A-1. Sampling Train

BILLING CODE 6560–50–C

Method 27—Determination of Vapor Tightness of Gasoline Delivery Tank Using Pressure Vaccuum Test

1.0 Scope and Application

1.1 Applicability. This method is applicable for the determination of vapor tightness of a gasoline delivery collection equipment.

2.0 Summary of Method

2.1 Pressure and vacuum are applied alternately to the compartments of a gasoline delivery tank and the change in pressure or vacuum is recorded after a specified period of time.

3.0 Definitions

3.1 *Allowable pressure change (Δp)* means the allowable amount of decrease in pressure during the static pressure test, within the time period t, as specified in the appropriate regulation, in mm H_2O.

3.2 *Allowable vacuum change (Δv)* means the allowable amount of decrease in vacuum during the static vacuum test, within the time period t, as specified in the appropriate regulation, in mm H_2O.

3.3 *Compartment* means a liquid-tight division of a delivery tank.

3.4 *Delivery tank* means a container, including associated pipes and fittings, that is attached to or forms a part of any truck, trailer, or railcar used for the transport of gasoline.

3.5 *Delivery tank vapor collection equipment* means any piping, hoses, and devices on the delivery tank used to collect and route gasoline vapors either from the tank to a bulk terminal vapor control system or from a bulk plant or service station into the tank.

3.6 *Gasoline* means a petroleum distillate or petroleum distillate/alcohol blend having a Reid vapor pressure of 27.6 kilopascals or greater which is used as a fuel for internal combustion engines.

3.7 *Initial pressure (P_i)* means the pressure applied to the delivery tank at the beginning of the static pressure test, as specified in the appropriate regulation, in mm H_2O.

3.8 *Initial vacuum (V_i)* means the vacuum applied to the delivery tank at the beginning of the static vacuum test, as specified in the appropriate regulation, in mm H_3.

3.9 *Time period of the pressure or vacuum test (t)* means the time period of the test, as specified in the appropriate regulation, during which the change in pressure or vacuum is monitored, in minutes.

4.0 Interferences [Reserved]

5.0 Safety

5.1 Gasoline contains several volatile organic compounds (*e.g.* benzene and hexane) which presents a potential for fire and/or explosions. It is advisable to take appropriate precautions when testing a gasoline vessel's vapor tightness, such as refraining from smoking and using explosion-proof equipment.

5.2 This method may involve hazardous materials, operations, and equipment. This test method may not address all of the safety problems associated with its use. It is the responsibility of the user of this test method to establish appropriate safety and health practices and determine the applicability of regulatory limitations prior to performing this test method

6.0 Equipment and Supplies

The following equipment and supplies are required for testing:

6.1 Pressure Source. Pump or compressed gas cylinder of air or inert gas sufficient to pressurize the delivery tank to 500 mm (20 in.) H_2O above atmospheric pressure.

6.2 Regulator. Low pressure regulator for controlling pressurization of the delivery tank.

6.3 Vacuum Source. Vacuum pump capable of evacuating the delivery tank to 250 mm (10 in.) H_2O below atmospheric pressure.

6.4 Pressure-Vacuum Supply Hose.

6.5 Manometer. Liquid manometer, or equivalent instrument, capable of measuring up to 500 mm (20 in.) H_2O gauge pressure with ± 2.5 mm (0.1 in.) H_2O precision.

6.6 Pressure-Vacuum Relief Valves. The test apparatus shall be equipped with an inline pressure-vacuum relief valve set to activate at 675 mm (26.6 in.) H_2O above atmospheric pressure or 250 mm (10 in.) H2O below atmospheric pressure, with a capacity equal to the pressurizing or evacuating pumps.

6.7 Test Cap for Vapor Recovery Hose. This cap shall have a tap for manometer connection and a fitting with shut-off valve for connection to the pressure-vacuum supply hose.

6.8 Caps for Liquid Delivery Hoses.

7.0 Reagents and Standards [Reserved]

8.0 Sample Collection, Preservation, Storage, and Transport

8.1 Pretest Preparations.

8.1.1 Summary. Testing problems may occur due to the presence of volatile vapors and/or temperature fluctuations inside the delivery tank. Under these conditions, it is often difficult to obtain a stable initial pressure at the beginning of a test, and erroneous test results may occur. To help prevent this, it is recommended that prior to testing, volatile vapors be removed from the tank and the temperature inside the tank be allowed to stabilize. Because it is not always possible to completely attain these pretest conditions, a provision to ensure reproducible results is included. The difference in results for two consecutive runs must meet the criteria in Sections 8.2.2.5 and 8.2.3.5.

8.1.2 Emptying of Tank. The delivery tank shall be emptied of all liquid.

8.1.3 Purging of Vapor. As much as possible the delivery tank shall be purged of all volatile vapors by any safe, acceptable method. One method is to carry a load of non-volatile liquid fuel, such as diesel or heating oil, immediately prior to the test, thus flushing out all the volatile gasoline vapors. A second method is to remove the volatile vapors by blowing ambient air into each tank compartment for at least 20 minutes. This second method is usually not as effective and often causes stabilization problems, requiring a much longer time for stabilization during the testing.

8.1.4 Temperature Stabilization. As much as possible, the test shall be conducted under isothermal conditions. The temperature of the delivery tank should be allowed to equilibrate in the test environment. During the test, the tank should be protected from extreme environmental and temperature variability, such as direct sunlight.

8.2 Test Procedure.

8.2.1 Preparations.

8.2.1.1 Open and close each dome cover.

8.2.1.2 Connect static electrical ground connections to the tank. Attach the liquid delivery and vapor return hoses, remove the liquid delivery elbows, and plug the liquid delivery fittings.

Note: The purpose of testing the liquid delivery hoses is to detect tears or holes that would allow liquid leakage during a delivery. Liquid delivery hoses are not considered to be possible sources of vapor leakage, and thus, do not have to be attached for a vapor leakage test. Instead, a liquid delivery hose could be either visually inspected, or filled with water to detect any liquid leakage.

8.2.1.3 Attach the test cap to the end of the vapor recovery hose.

8.2.1.4 Connect the pressure-vacuum supply hose and the pressure-vacuum relief valve to the shut-off valve. Attach a manometer to the pressure tap.

8.2.1.5 Connect compartments of the tank internally to each other if possible.

If not possible, each compartment must be tested separately, as if it were an individual delivery tank.

8.2.2 Pressure Test.

8.2.2.1 Connect the pressure source to the pressure-vacuum supply hose.

8.2.2.2 Open the shut-off valve in the vapor recovery hose cap. Apply air pressure slowly, pressurize the tank to P_i, the initial pressure specified in the regulation.

8.2.2.3 Close the shut-off and allow the pressure in the tank to stabilize, adjusting the pressure if necessary to maintain pressure of P_i. When the pressure stabilizes, record the time and initial pressure.

8.2.2.4 At the end of the time period (t) specified in the regulation, record the time and final pressure.

8.2.2.5 Repeat steps 8.2.2.2 through 8.2.2.4 until the change in pressure for two consecutive runs agrees within 12.5 mm (0.5 in.) H_2O. Calculate the arithmetic average of the two results.

8.2.2.6 Compare the average measured change in pressure to the allowable pressure change, Δp, specified in the regulation. If the delivery tank does not satisfy the vapor tightness criterion specified in the regulation, repair the sources of leakage, and repeat the pressure test until the criterion is met.

8.2.2.7 Disconnect the pressure source from the pressure-vacuum supply hose, and slowly open the shut-off valve to bring the tank to atmospheric pressure.

8.2.3 Vacuum Test.

8.2.3.1 Connect the vacuum source to the pressure-vacuum supply hose.

8.2.3.2 Open the shut-off valve in the vapor recovery hose cap. Slowly evacuate the tank to V_i, the initial vacuum specified in the regulation.

8.2.3.3 Close the shut-off valve and allow the pressure in the tank to stabilize, adjusting the pressure if necessary to maintain a vacuum of V_i. When the pressure stabilizes, record the time and initial vacuum.

8.2.3.4 At the end of the time period specified in the regulation (t), record the time and final vacuum.

8.2.3.5 Repeat steps 8.2.3.2 through 8.2.3.4 until the change in vacuum for two consecutive runs agrees within 12.5 mm (0.5 in.) H_2O. Calculate the arithmetic average of the two results.

8.2.3.6 Compare the average measured change in vacuum to the allowable vacuum change, Δv, as specified in the regulation. If the delivery tank does not satisfy the vapor tightness criterion specified in the regulation, repair the sources of leakage, and repeat the vacuum test until the criterion is met.

8.2.3.7 Disconnect the vacuum source from the pressure-vacuum supply hose, and slowly open the shut-off valve to bring the tank to atmospheric pressure.

8.2.4 Post-Test Clean-up. Disconnect all test equipment and return the delivery tank to its pretest condition.

9.0 Quality Control

Section(s)	Quality control measure	Effect
8.2.2.5, 8.3.3.5	Repeat test procedures until change in pressure or vacuum for two consecutive runs agrees within ± 12.5 mm (0.5 in.) H_2O.	Ensures data precision.

10.0 Calibration and Standardization [Reserved]

11.0 Analytical Procedures [Reserved]

12.0 Data Analysis and Calculations [Reserved]

13.0 Method Performance

13.1 Precision. The vapor tightness of a gasoline delivery tank under positive or negative pressure, as measured by this method, is precise within 12.5 mm (0.5 in.) H_2O

13.2 Bias. No bias has been identified.

14.0 Pollution Prevention [Reserved]

15.0 Waste Management [Reserved]

16.0 Alternative Procedures

16.1 The pumping of water into the bottom of a delivery tank is an acceptable alternative to the pressure source described above. Likewise, the draining of water out of the bottom of a delivery tank may be substituted for the vacuum source. Note that some of the specific step-by-step procedures in the method must be altered slightly to accommodate these different pressure and vacuum sources.

16.2 Techniques other than specified above may be used for purging and pressurizing a delivery tank, if prior approval is obtained from the Administrator. Such approval will be based upon demonstrated equivalency with the above method.

17.0 References [Reserved]

18.0 Tables, Diagrams, Flowcharts, and Validation Data [Reserved]

Method 28—Certification and Auditing of Wood Heaters

Note: This method does not include all of the specifications (*e.g.,* equipment and supplies) and procedures (*e.g.,* sampling and analytical) essential to its performance. Some material is incorporated by reference from other methods in this part. Therefore, to obtain reliable results, persons using this method should have a thorough knowledge of at least the following additional test methods: Method 1, Method 2, Method 3, Method 4, Method 5, Method 5G, Method 5H, Method 6, Method 6C, and Method 16A.

1.0 Scope and Application

1.1 Analyte. Particulate matter (PM). No CAS number assigned.

1.2 Applicability. This method is applicable for the certification and auditing of wood heaters, including pellet burning wood heaters.

1.3 Data Quality Objectives. Adherence to the requirements of this method will enhance the quality of the data obtained from air pollutant sampling methods.

2.0 Summary of Method

2.1 Particulate matter emissions are measured from a wood heater burning a prepared test fuel crib in a test facility maintained at a set of prescribed conditions. Procedures for determining burn rates and particulate emission rates and for reducing data are provided.

3.0 Definitions

3.1 *2 × 4 or 4 × 4* means two inches by four inches or four inches by four inches (50 mm by 100 mm or 100 mm by 100 mm), as nominal dimensions for lumber.

3.2 *Burn rate* means the rate at which test fuel is consumed in a wood heater. Measured in kilograms or lbs of wood (dry basis) per hour (kg/hr or lb/hr).

3.3 *Certification or audit test* means a series of at least four test runs conducted for certification or audit purposes that meets the burn rate specifications in Section 8.4.

3.4 *Firebox* means the chamber in the wood heater in which the test fuel charge is placed and combusted.

3.5 *Height* means the vertical distance extending above the loading door, if fuel could reasonably occupy that space, but not more than 2 inches above the top (peak height) of the loading door, to the floor of the firebox

(*i.e.*, below a permanent grate) if the grate allows a 1-inch diameter piece of wood to pass through the grate, or, if not, to the top of the grate. Firebox height is not necessarily uniform but must account for variations caused by internal baffles, air channels, or other permanent obstructions.

3.6 *Length* means the longest horizontal fire chamber dimension that is parallel to a wall of the chamber.

3.7 *Pellet burning wood heater* means a wood heater which meets the following criteria: (1) The manufacturer makes no reference to burning cord wood in advertising or other literature, (2) the unit is safety listed for pellet fuel only, (3) the unit operating and instruction manual must state that the use of cordwood is prohibited by law, and (4) the unit must be manufactured and sold including the hopper and auger combination as integral parts.

3.8 *Secondary air supply* means an air supply that introduces air to the wood heater such that the burn rate is not altered by more than 25 percent when the secondary air supply is adjusted during the test run. The wood heater manufacturer can document this through design drawings that show the secondary air is introduced only into a mixing chamber or secondary chamber outside the firebox.

3.9 *Test facility* means the area in which the wood heater is installed, operated, and sampled for emissions.

3.10 *Test fuel charge* means the collection of test fuel pieces placed in the wood heater at the start of the emission test run.

3.11 *Test fuel crib* means the arrangement of the test fuel charge with the proper spacing requirements between adjacent fuel pieces.

3.12 *Test fuel loading density* means the weight of the as-fired test fuel charge per unit volume of usable firebox.

3.13 *Test fuel piece* means the 2 × 4 or 4 × 4 wood piece cut to the length required for the test fuel charge and used to construct the test fuel crib.

3.14 *Test run* means an individual emission test which encompasses the time required to consume the mass of the test fuel charge.

3.15 *Usable firebox volume* means the volume of the firebox determined using its height, length, and width as defined in this section.

3.16 *Width* means the shortest horizontal fire chamber dimension that is parallel to a wall of the chamber.

3.17 *Wood heater* means an enclosed, woodburning appliance capable of and intended for space heating or domestic water heating, as defined in the applicable regulation.

4.0 Interferences [Reserved]

5.0 Safety

5.1 Disclaimer. This method may involve hazardous materials, operations, and equipment. This test method may not address all of the safety problems associated with its use. It is the responsibility of the user of this test method to establish appropriate safety and health practices and to determine the applicability of regulatory limitations prior to performing this test method.

6.0 Equipment and Supplies

Same as Section 6.0 of either Method 5G or Method 5H, with the addition of the following:

6.1 Insulated Solid Pack Chimney. For installation of wood heaters. Solid pack insulated chimneys shall have a minimum of 2.5 cm (1 in.) solid pack insulating material surrounding the entire flue and possess a label demonstrating conformance to U.L. 103 (incorporated by reference—see § 60.17).

6.2 Platform Scale and Monitor. For monitoring of fuel load weight change. The scale shall be capable of measuring weight to within 0.05 kg (0.1 lb) or 1 percent of the initial test fuel charge weight, whichever is greater.

6.3 Wood Heater Temperature Monitors. Seven, each capable of measuring temperature to within 1.5 percent of expected absolute temperatures.

6.4 Test Facility Temperature Monitor. A thermocouple located centrally in a vertically oriented 150 mm (6 in.) long, 50 mm (2 in.) diameter pipe shield that is open at both ends, capable of measuring temperature to within 1.5 percent of expected temperatures.

6.5 Balance (optional). Balance capable of weighing the test fuel charge to within 0.05 kg (0.1 lb).

6.6 Moisture Meter. Calibrated electrical resistance meter for measuring test fuel moisture to within 1 percent moisture content.

6.7 Anemometer. Device capable of detecting air velocities less than 0.10 m/sec (20 ft/min), for measuring air velocities near the test appliance.

6.8 Barometer. Mercury, aneroid or other barometer capable of measuring atmospheric pressure to within 2.5 mm Hg (0.1 in. Hg).

6.9 Draft Gauge. Electromanometer or other device for the determination of flue draft or static pressure readable to within 0.50 Pa (0.002 in. H_2O).

6.10 Humidity Gauge. Psychrometer or hygrometer for measuring room humidity.

6.11 Wood Heater Flue.

6.11.1 Steel flue pipe extending to 2.6 ± 0.15 m (8.5 ± 0.5 ft) above the top of the platform scale, and above this level, insulated solid pack type chimney extending to 4.6 ± 0.3 m (15 ± 1 ft) above the platform scale, and of the size specified by the wood heater manufacturer. This applies to both freestanding and insert type wood heaters.

6.11.2 Other chimney types (*e.g.,* solid pack insulated pipe) may be used in place of the steel flue pipe if the wood heater manufacturer's written appliance specifications require such chimney for home installation (*e.g.,* zero clearance wood heater inserts). Such alternative chimney or flue pipe must remain and be sealed with the wood heater following the certification test.

6.12 Test Facility. The test facility shall meet the following requirements during testing:

6.12.1 The test facility temperature shall be maintained between 18 and 32 °C (65 and 90 °F) during each test run.

6.12.2 Air velocities within 0.6 m (2 ft) of the test appliance and exhaust system shall be less than 0.25 m/sec (50 ft/min) without fire in the unit.

6.12.3 The flue shall discharge into the same space or into a space freely communicating with the test facility. Any hood or similar device used to vent combustion products shall not induce a draft greater than 1.25 Pa (0.005 in. H_2O) on the wood heater measured when the wood heater is not operating.

6.12.4 For test facilities with artificially induced barometric pressures (*e.g.,* pressurized chambers), the barometric pressure in the test facility shall not exceed 775 mm Hg (30.5 in. Hg) during any test run.

7.0 Reagents and Standards

Same as Section 6.0 of either Method 5G or Method 5H, with the addition of the following:

7.1 Test Fuel. The test fuel shall conform to the following requirements:

7.1.1 Fuel Species. Untreated, air-dried, Douglas fir lumber. Kiln-dried lumber is not permitted. The lumber shall be certified C grade (standard) or better Douglas fir by a lumber grader at the mill of origin as specified in the West Coast Lumber Inspection Bureau Standard No. 16 (incorporated by reference—see § 60.17).

7.1.2 Fuel Moisture. The test fuel shall have a moisture content range between 16 to 20 percent on a wet basis (19 to 25 percent dry basis). Addition of moisture to previously dried wood is not allowed. It is recommended that the test fuel be stored in a temperature and humidity-controlled room.

7.1.3 Fuel Temperature. The test fuel shall be at the test facility temperature of 18 to 32 °C (65 to 90 °F).

7.1.4 Fuel Dimensions. The dimensions of each test fuel piece shall conform to the nominal measurements of 2×4 and 4×4 lumber. Each piece of test fuel (not including spacers) shall be of equal length, except as necessary to meet requirements in Section 8.8, and shall closely approximate ⅚ the dimensions of the length of the usable firebox. The fuel piece dimensions shall be determined in relation to the appliance's firebox volume according to guidelines listed below:

7.1.4.1 If the usable firebox volume is less than or equal to 0.043 m^3 (1.5 ft^3), use 2×4 lumber.

7.1.4.2 If the usable firebox volume is greater than 0.043 m^3 (1.5 ft^3) and less than or equal to 0.085 m^3 (3.0 ft^3), use 2×4 and 4×4 lumber. About half the weight of the test fuel charge shall be 2×4 lumber, and the remainder shall be 4×4 lumber.

7.1.4.3 If the usable firebox volume is greater than 0.085 m^3 (3.0 ft^3), use 4×4 lumber.

7.2 Test Fuel Spacers. Air-dried, Douglas fir lumber meeting the requirements outlined in Sections 7.1.1 through 7.1.3. The spacers shall be 130×40×20 mm (5×1.5×0.75 in.).

8.0 Sample Collection, Preservation, Storage, and Transport

8.1 Test Run Requirements.

8.1.1 Burn Rate Categories. One emission test run is required in each of the following burn rate categories:

BURN RATE CATEGORIES

[Average kg/hr (lb/hr), dry basis]

Category 1	Category 2	Category 3	Category 4
<0.80 (<1.76)	0.80 to 1.25 (1.76 to 2.76)	1.25 to 1.90 (2.76 to 4.19)	Maximum. burn rate.

8.1.1.1 Maximum Burn Rate. For Category 4, the wood heater shall be operated with the primary air supply inlet controls fully open (or, if thermostatically controlled, the thermostat shall be set at maximum heat output) during the entire test run, or the maximum burn rate setting specified by the manufacturer's written instructions.

8.1.1.2 Other Burn Rate Categories. For burn rates in Categories 1 through 3, the wood heater shall be operated with the primary air supply inlet control, or other mechanical control device, set at a predetermined position necessary to obtain the average burn rate required for the category.

8.1.1.3 Alternative Burn Rates for Burn Rate Categories 1 and 2.

8.1.1.3.1 If a wood heater cannot be operated at a burn rate below 0.80 kg/hr (1.76 lb/hr), two test runs shall be conducted with burn rates within Category 2. If a wood heater cannot be operated at a burn rate below 1.25 kg/hr (2.76 lb/hr), the flue shall be dampered or the air supply otherwise controlled in order to achieve two test runs within Category 2.

8.1.1.3.2 Evidence that a wood heater cannot be operated at a burn rate less than 0.80 kg/hr shall include documentation of two or more attempts to operate the wood heater in burn rate Category 1 and fuel combustion has stopped, or results of two or more test runs demonstrating that the burn rates were greater than 0.80 kg/hr when the air supply controls were adjusted to the lowest possible position or settings. Stopped fuel combustion is evidenced when an elapsed time of 30 minutes or more has occurred without a measurable (< 0.05 kg (0.1 lb) or 1.0 percent, whichever is greater) weight change in the test fuel charge. See also Section 8.8.3. Report the evidence and the reasoning used to determine that a test in burn rate Category 1 cannot be achieved; for example, two unsuccessful attempts to operate at a burn rate of 0.4 kg/hr are not sufficient evidence that burn rate Category 1 cannot be achieved.

Note: After July 1, 1990, if a wood heater cannot be operated at a burn rate less than 0.80 kg/hr, at least one test run with an average burn rate of 1.00 kg/hr or less shall be conducted. Additionally, if flue dampering must be used to achieve burn rates below 1.25 kg/hr (or 1.0 kg/hr), results from a test run conducted at burn rates below 0.90 kg/hr need not be reported or included in the test run average provided that such results are replaced with results from a test run meeting the criteria above.

8.2 Catalytic Combustor and Wood Heater Aging. The catalyst-equipped wood heater or a wood heater of any type shall be aged before the certification test begins. The aging procedure shall be conducted and documented by a testing laboratory accredited according to procedures in § 60.535 of 40 CFR part 60.

8.2.1 Catalyst-equipped Wood Heater. Operate the catalyst-equipped wood heater using fuel meeting the specifications outlined in Sections 7.1.1 through 7.1.3, or cordwood with a moisture content between 15 and 25 percent on a wet basis. Operate the wood heater at a medium burn rate (Category 2 or 3) with a new catalytic combustor in place and in operation for at least 50 hours. Record and report hourly catalyst exit temperature data (Section 8.6.2) and the hours of operation.

8.2.2 Non-Catalyst Wood Heater. Operate the wood heater using the fuel described in Section 8.4.1 at a medium burn rate for at least 10 hours. Record and report the hours of operation.

8.3 Pretest Recordkeeping. Record the test fuel charge dimensions and weights, and wood heater and catalyst descriptions as shown in the example in Figure 28–1.

8.4 Wood Heater Installation. Assemble the wood heater appliance and parts in conformance with the manufacturer's written installation instructions. Place the wood heater centrally on the platform scale and connect the wood heater to the flue described in Section 6.11. Clean the flue with an appropriately sized, wire chimney brush before each certification test.

8.5 Wood Heater Temperature Monitors.

8.5.1 For catalyst-equipped wood heaters, locate a temperature monitor (optional) about 25 mm (1 in.) upstream of the catalyst at the centroid of the catalyst face area, and locate a temperature monitor (mandatory) that will indicate the catalyst exhaust temperature. This temperature monitor is centrally located within 25 mm (1 in.) downstream at the centroid of catalyst face area. Record these locations.

8.5.2 Locate wood heater surface temperature monitors at five locations on the wood heater firebox exterior surface. Position the temperature monitors centrally on the top surface, on two sidewall surfaces, and on the bottom and back surfaces. Position the monitor sensing tip on the firebox exterior surface inside of any heat shield, air circulation walls, or other

wall or shield separated from the firebox exterior surface. Surface temperature locations for unusual design shapes (*e.g.,* spherical, etc.) shall be positioned so that there are four surface temperature monitors in both the vertical and horizontal planes passing at right angles through the centroid of the firebox, not including the fuel loading door (total of five temperature monitors).

8.6 Test Facility Conditions.

8.6.1 Locate the test facility temperature monitor on the horizontal plane that includes the primary air intake opening for the wood heater. Locate the temperature monitor 1 to 2 m (3 to 6 ft) from the front of the wood heater in the 90° sector in front of the wood heater.

8.6.2 Use an anemometer to measure the air velocity. Measure and record the room air velocity before the pretest ignition period (Section 8.7) and once immediately following the test run completion.

8.6.3 Measure and record the test facility's ambient relative humidity, barometric pressure, and temperature before and after each test run.

8.6.4 Measure and record the flue draft or static pressure in the flue at a location no greater than 0.3 m (1 ft) above the flue connector at the wood heater exhaust during the test run at the recording intervals (Section 8.8.2).

8.7 Wood Heater Firebox Volume.

8.7.1 Determine the firebox volume using the definitions for height, width, and length in Section 3. Volume adjustments due to presence of firebrick and other permanent fixtures may be necessary. Adjust width and length dimensions to extend to the metal wall of the wood heater above the firebrick or permanent obstruction if the firebrick or obstruction extending the length of the side(s) or back wall extends less than one-third of the usable firebox height. Use the width or length dimensions inside the firebrick if the firebrick extends more than one-third of the usable firebox height. If a log retainer or grate is a permanent fixture and the manufacturer recommends that no fuel be placed outside the retainer, the area outside of the retainer is excluded from the firebox volume calculations.

8.7.2 In general, exclude the area above the ash lip if that area is less than 10 percent of the usable firebox volume. Otherwise, take into account consumer loading practices. For instance, if fuel is to be loaded front-to-back, an ash lip may be considered usable firebox volume.

8.7.3 Include areas adjacent to and above a baffle (up to two inches above the fuel loading opening) if four inches or more horizontal space exist between the edge of the baffle and a vertical obstruction (*e.g.,* sidewalls or air channels).

8.8 Test Fuel Charge.

8.8.1 Prepare the test fuel pieces in accordance with the specifications outlined in Sections 7.1 and 7.2. Determine the test fuel moisture content with a calibrated electrical resistance meter or other equivalent performance meter. If necessary, convert fuel moisture content values from dry basis ($\%M_d$) to wet basis ($\%M_w$) in Section 12.2 using Equation 28–1. Determine fuel moisture for each fuel piece (not including spacers) by averaging at least three moisture meter readings, one from each of three sides, measured parallel to the wood grain. Average all the readings for all the fuel pieces in the test fuel charge. If an electrical resistance type meter is used, penetration of insulated electrodes shall be one-fourth the thickness of the test fuel piece or 19 mm (0.75 in.), whichever is greater. Measure the moisture content within a 4-hour period prior to the test run. Determine the fuel temperature by measuring the temperature of the room where the wood has been stored for at least 24 hours prior to the moisture determination.

8.8.2 Attach the spacers to the test fuel pieces with uncoated, ungalvanized nails or staples as illustrated in Figure 28–2. Attachment of spacers to the top of the test fuel piece(s) on top of the test fuel charge is optional.

8.8.3 To avoid stacking difficulties, or when a whole number of test fuel pieces does not result, all piece lengths shall be adjusted uniformly to remain within the specified loading density. The shape of the test fuel crib shall be geometrically similar to the shape of the firebox volume without resorting to special angular or round cuts on the individual fuel pieces.

8.8.4 The test fuel loading density shall be 112 ± 11.2 kg/m^3 (7 ± 0.7 lb/ft^3) of usable firebox volume on a wet basis.

8.9 Sampling Equipment. Prepare the sampling equipment as defined by the selected method (*i.e.,* either Method 5G or Method 5H). Collect one particulate emission sample for each test run.

8.10 Secondary Air Adjustment Validation.

8.10.1 If design drawings do not show the introduction of secondary air into a chamber outside the firebox (see ''secondary air supply'' under Section 3.0, Definitions), conduct a separate test of the wood heater's secondary air supply. Operate the wood heater at a burn rate in Category 1 (Section 8.1.1) with the secondary air supply operated following the manufacturer's written instructions. Start the secondary air validation test run as described in Section 8.8.1, except no emission sampling is necessary and burn rate data shall be recorded at 5-minute intervals.

8.10.2 After the start of the test run, operate the wood heater with the secondary air supply set as per the manufacturer's instructions, but with no adjustments to this setting. After 25 percent of the test fuel has been consumed, adjust the secondary air supply controls to another setting, as per the manufacturer's instructions. Record the burn rate data (5-minute intervals) for 20 minutes following the air supply adjustment.

8.10.3 Adjust the air supply control(s) to the original position(s), operate at this condition for at least 20 minutes, and repeat the air supply adjustment procedure above. Repeat the procedure three times at equal intervals over the entire burn period as defined in Section 8.8. If the secondary air adjustment results in a burn rate change of more than an average of 25 percent between the 20-minute periods before and after the secondary adjustments, the secondary air supply shall be considered a primary air supply, and no adjustment to this air supply is allowed during the test run.

8.10.4 The example sequence below describes a typical secondary air adjustment validation check. The first cycle begins after at least 25 percent of the test fuel charge has been consumed.

Cycle 1
- Part 1, sec air adjusted to final position—20 min
- Part 2, sec air adjusted to final position—20 min
- Part 3, sec air adjusted to final position—20 min

Cycle 2
- Part 1, sec air adjusted to final position—20 min
- Part 2, sec air adjusted to final position—20 min
- Part 3, sec air adjusted to final position—20 min

Cycle 3
- Part 1, sec air adjusted to final position—20 min
- Part 2, sec air adjusted to final position—20 min
- Part 3, sec air adjusted to final position—20 min

Note that the cycles may overlap; that is, Part 3 of Cycle 1 may coincide in part or in total with Part 1 of Cycle 2. The calculation of the secondary air percent effect for this example is as follows:

$$\%BR_{sec} = \frac{\left|\overline{BR_{1,3}} - \overline{BR_2}\right|}{\overline{BR_{1,3}}} \times 100 \qquad \text{Eq. 28-1}$$

8.11 Pretest Ignition. Build a fire in the wood heater in accordance with the manufacturer's written instructions.

8.11.1 Pretest Fuel Charge. Crumpled newspaper loaded with kindling may be used to help ignite the pretest fuel. The pretest fuel, used to sustain the fire, shall meet the same fuel requirements prescribed in Section 7.1. The pretest fuel charge shall consist of whole 2×4's that are no less than ⅓ the length of the test fuel pieces. Pieces of 4×4 lumber in approximately the same weight ratio as for the test fuel charge may be added to the pretest fuel charge.

8.11.2 Wood Heater Operation and Adjustments. Set the air inlet supply controls at any position that will maintain combustion of the pretest fuel load. At least one hour before the start of the test run, set the air supply controls at the approximate positions necessary to achieve the burn rate desired for the test run. Adjustment of the air supply controls, fuel addition or subtractions, and coalbed raking shall be kept to a minimum but are allowed up to 15 minutes prior to the start of the test run. For the purposes of this method, coalbed raking is the use of a metal tool (poker) to stir coals, break burning fuel into smaller pieces, dislodge fuel pieces from positions of poor combustion, and check for the condition of uniform charcoalization. Record all adjustments made to the air supply controls, adjustments to and additions or subtractions of fuel, and any other changes to wood heater operations that occur during pretest ignition period. Record fuel weight data and wood heater temperature measurements at 10-minute intervals during the hour of the pretest ignition period preceding the start of the test run. During the 15-minute period prior to the start of the test run, the wood heater loading door shall not be open more than a total of 1 minute. Coalbed raking is the only adjustment allowed during this period.

Note: One purpose of the pretest ignition period is to achieve uniform charcoalization of the test fuel bed prior to loading the test fuel charge. Uniform charcoalization is a general condition of the test fuel bed evidenced by an absence of large pieces of burning wood in the coal bed and the remaining fuel pieces being brittle enough to be broken into smaller charcoal pieces with a metal poker. Manipulations to the fuel bed prior to the start of the test run should be done to achieve uniform charcoalization while maintaining the desired burn rate. In addition, some wood heaters (*e.g.,* high mass units) may require extended pretest burn time and fuel additions to reach an initial average surface temperature sufficient to meet the thermal equilibrium criteria in Section 8.3.

8.11.3 The weight of pretest fuel remaining at the start of the test run is determined as the difference between the weight of the wood heater with the remaining pretest fuel and the tare weight of the cleaned, dry wood heater with or without dry ash or sand added consistent with the manufacturer's instructions and the owner's manual. The tare weight of the wood heater must be determined with the wood heater (and ash, if added) in a dry condition.

8.12 Test Run. Complete a test run in each burn rate category, as follows:

8.12.1 Test Run Start.

8.12.1.1 When the kindling and pretest fuel have been consumed to leave a fuel weight between 20 and 25 percent of the weight of the test fuel charge, record the weight of the fuel remaining and start the test run. Record and report any other criteria, in addition to those specified in this section, used to determine the moment of the test run start (*e.g.*, firebox or catalyst temperature), whether such criteria are specified by the wood heater manufacturer or the testing laboratory. Record all wood heater individual surface temperatures, catalyst temperatures, any initial sampling method measurement values, and begin the particulate emission sampling. Within 1 minute following the start of the test run, open the wood heater door, load the test fuel charge, and record the test fuel charge weight. Recording of average, rather than individual, surface temperatures is acceptable for tests conducted in accordance with § 60.533(o)(3)(i) of 40 CFR part 60.

8.12.1.2 Position the fuel charge so that the spacers are parallel to the floor of the firebox, with the spacer edges abutting each other. If loading difficulties result, some fuel pieces may be placed on edge. If the usable firebox volume is between 0.043 and 0.085 m^3 (1.5 and 3.0 ft^3), alternate the piece sizes in vertical stacking layers to the extent possible. For example, place 2 × 4's on the bottom layer in direct contact with the coal bed and 4 × 4's on the next layer, etc. (See Figure 28–3). Position the fuel pieces parallel to each other and parallel to the longest wall of the firebox to the extent possible within the specifications in Section 8.8.

8.12.1.3 Load the test fuel in appliances having unusual or unconventional firebox design maintaining air space intervals between the test fuel pieces and in conformance with the manufacturer's written instructions. For any appliance that will not accommodate the loading arrangement specified in the paragraph above, the test facility personnel shall contact the Administrator for an alternative loading arrangement.

8.12.1.4 The wood heater door may remain open and the air supply controls adjusted up to five minutes after the start of the test run in order to make adjustments to the test fuel charge and to ensure ignition of the test fuel charge has occurred. Within the five minutes after the start of the test run, close the wood heater door and adjust the air supply controls to the position determined to produce the desired burn rate. No other adjustments to the air supply controls or the test fuel charge are allowed (except as specified in Sections 8.12.3 and 8.12.4) after the first five minutes of the test run. Record the length of time the wood heater door remains open, the adjustments to the air supply controls, and any other operational adjustments.

8.12.2 Data Recording. Record on a data sheet similar to that shown in Figure 28–4, at intervals no greater than 10 minutes, fuel weight data, wood heater individual surface and catalyst temperature measurements, other wood heater operational data (*e.g.*, draft), test facility temperature and sampling method data.

8.12.3 Test Fuel Charge Adjustment. The test fuel charge may be adjusted (*i.e.*, repositioned) once during a test run if more than 60 percent of the initial test fuel charge weight has been consumed and more than 10 minutes have elapsed without a measurable (<0.05 kg (0.1 lb) or 1.0 percent, whichever is greater) weight change. The time used to make this adjustment shall be less than 15 seconds.

8.12.4 Air Supply Adjustment. Secondary air supply controls may be adjusted once during the test run following the manufacturer's written instructions (see Section 8.10). No other air supply adjustments are allowed during the test run. Recording of wood heater flue draft during the test run is optional for tests conducted in

accordance with § 60.533(o)(3)(i) of 40 CFR part 60.

8.12.5 Auxiliary Wood Heater Equipment Operation. Heat exchange blowers sold with the wood heater shall be operated during the test run following the manufacturer's written instructions. If no manufacturer's written instructions are available, operate the heat exchange blower in the ''high'' position. (Automatically operated blowers shall be operated as designed.) Shaker grates, by-pass controls, or other auxiliary equipment may be adjusted only one time during the test run following the manufacturer's written instructions.

Record all adjustments on a wood heater operational written record.

Note: If the wood heater is sold with a heat exchange blower as an option, test the wood heater with the heat exchange blower operating as described in Sections 8.1 through 8.12 and report the results. As an alternative to repeating all test runs without the heat exchange blower operating, one additional test run may be without the blower operating as described in Section 8.12.5 at a burn rate in Category 2 (Section 8.1.1). If the emission rate resulting from this test run without the blower operating is equal to or less than the emission rate plus 1.0 g/hr (0.0022 lb/hr) for the test run in burn rate Category 2 with the blower operating, the wood heater may be considered to have the same average emission rate with or without the blower operating. Additional test runs without the blower operating are unnecessary.

8.13 Test Run Completion. Continue emission sampling and wood heater operation for 2 hours. The test run is completed when the remaining weight of the test fuel charge is 0.00 kg (0.0 lb). End the test run when the scale has indicated a test fuel charge weight of 0.00 kg (0.0 lb) or less for 30 seconds. At the end of the test run, stop the particulate sampling, and record the final fuel weight, the run time, and all final measurement values.

8.14 Wood Heater Thermal Equilibrium. The average of the wood heater surface temperatures at the end of the test run shall agree with the average surface temperature at the start of the test run to within 70 °C (126 °F).

8.15 Consecutive Test Runs. Test runs on a wood heater may be conducted consecutively provided that a minimum one-hour interval occurs between test runs.

8.16 Additional Test Runs. The testing laboratory may conduct more than one test run in each of the burn rate categories specified in Section 8.1.1. If more than one test run is conducted at a specified burn rate, the results from at least two-thirds of the test runs in that burn rate category shall be used in calculating the weighted average emission rate (see Section 12.2). The measurement data and results of all test runs shall be reported regardless of which values are used in calculating the weighted average emission rate (see **Note** in Section 8.1).

9.0 Quality Control

Same as Section 9.0 of either Method 5G or Method 5H.

10.0 Calibration and Standardizations

Same as Section 10.0 of either Method 5G or Method 5H, with the addition of the following:

10.1 Platform Scale. Perform a multi-point calibration (at least five points spanning the operational range) of the platform scale before its initial use. The scale manufacturer's calibration results are sufficient for this purpose. Before each certification test, audit the scale with the wood heater in place by weighing at least one calibration weight (Class F) that corresponds to between 20 percent and 80 percent of the expected test fuel charge weight. If the scale cannot reproduce the value of the calibration weight within 0.05 kg (0.1 lb) or 1 percent of the expected test fuel charge weight, whichever is greater, recalibrate the scale before use with at least five calibration weights spanning the operational range of the scale.

10.2 Balance (optional). Calibrate as described in Section 10.1.

10.3 Temperature Monitor. Calibrate as in Method 2, Section 4.3, before the first certification test and semiannually thereafter.

10.4 Moisture Meter. Calibrate as per the manufacturer's instructions before each certification test.

10.5 Anemometer. Calibrate the anemometer as specified by the manufacturer's instructions before the first certification test and semiannually thereafter.

10.6 Barometer. Calibrate against a mercury barometer before the first certification test and semiannually thereafter.

10.7 Draft Gauge. Calibrate as per the manufacturer's instructions; a liquid manometer does not require calibration.

10.8 Humidity Gauge. Calibrate as per the manufacturer's instructions before the first certification test and semiannually thereafter.

11.0 Analytical Procedures

Same as Section 11.0 of either Method 5G or Method 5H.

12.0 Data Analysis and Calculations

Same as Section 12.0 of either Method 5G or Method 5H, with the addition of the following:

12.1 Nomenclature.

BR = Dry wood burn rate, kg/hr (lb/hr)

E_i = Emission rate for test run, i, from Method 5G or 5H, g/hr (lb/hr)

E_w = Weighted average emission rate, g/hr (lb/hr)

k_i = Test run weighting factor = $P_{i+1} - P_{i-1}$

$\%M_d$ = Fuel moisture content, dry basis, percent.

$\%M_w$ = Average moisture in test fuel charge, wet basis, percent.

n = Total number of test runs.

P_i = Probability for burn rate during test run, i, obtained from Table 28–1. Use linear interpolation to determine probability values for burn rates between those listed on the table.

W_{wd} = Total mass of wood burned during the test run, kg (lb).

12.2 Wet Basis Fuel Moisture Content.

$$\%M_w = \frac{100(\%M_d)}{100 + \%M_d} \qquad \text{Eq. 28-2}$$

12.3 Weighted Average Emission Rate. Calculate the weighted average emission rate (E_w) using Equation 28–1:

$$E_w = \frac{\sum_{i=1}^{n}(K_i E_i)}{\sum_{i=1}^{n} K_i} \qquad \text{Eq. 28-3}$$

Note: P_o always equals 0, $P_{(n+1)}$ always equals 1, P_1 corresponds to the probability of the lowest recorded burn rate, P_2 corresponds to the probability of the next lowest burn rate, etc. An example calculation is in Section 12.3.1.

12.3.1 Example Calculation of Weighted Average Emission Rate.

Burn rate category	Test No.	Burn rate (Dry-kg/hr)	Emissions (g/hr)
1	1	0.65	5.0
2[1]	2	0.85	6.7
2	3	0.90	4.7

Burn rate category	Test No.	Burn rate (Dry-kg/hr)	Emissions (g/hr)
2	4	1.00	5.3
3	5	1.45	3.8
4	6	2.00	5.1

[1] As permitted in Section 6.6, this test run may be omitted from the calculation of the weighted average emission rate because three runs were conducted for this burn rate category.

Test No.	Burn rate	P_i	E_i	K_i
0	.....	0.000	.....	.....
1	0.65	0.121	5.0	0.300
2	0.90	0.300	4.7	0.259
3	1.00	0.380	5.3	0.422
4	1.45	0.722	3.8	0.532
5	2.00	0.912	5.1	0.278
6	.....	1.000	.....	.....

$K_1 = P_2 - P_0 = 0.300 - 0 = 0.300$
$K_2 = P_3 - P_1 = 0.381 - 0.121 = 0.259$
$K_3 = P_4 - P_2 = 0.722 - 0.300 = 0.422$
$K_4 = P_5 - P_3 = 0.912 - 0.380 = 0.532$
$K_5 = P_6 - P_4 = 1.000 - 0.722 = 0.278$

Weighted Average Emission Rate, E_w, Calculation

$$E_w = \frac{\sum (K_i E_i)}{\sum K_i} = \frac{(0.3)(5.0) + (0.259)(4.7) + (0.422)(5.3) + (0.532)(3.8) + (0.278)(5.1)}{1.791} = 4.69\,g/hr$$

12.4 Average Wood Heater Surface Temperatures. Calculate the average of the wood heater surface temperatures for the start of the test run (Section 8.12.1) and for the test run completion (Section 8.13). If the two average temperatures do not agree within 70 °C (125 °F), report the test run results, but do not include the test run results in the test average. Replace such test run results with results from another test run in the same burn rate category.

12.5 Burn Rate. Calculate the burn rate (BR) using Equation 28–3:

$$BR = \frac{60 W_{wd}}{\theta} \times \frac{100 - \%M_w}{100} \qquad \text{Eq. 28-3}$$

12.6 Reporting Criteria. Submit both raw and reduced test data for wood heater tests.

12.6.1 Suggested Test Report Format.

12.6.1.1 Introduction.

12.6.1.1.1 Purpose of test-certification, audit, efficiency, research and development.

12.6.1.1.2 Wood heater identification-manufacturer, model number, catalytic/noncatalytic, options.

12.6.1.1.3 Laboratory-name, location (altitude), participants.

12.6.1.1.4 Test information-date wood heater received, date of tests, sampling methods used, number of test runs.

12.6.1.2 Summary and Discussion of Results

12.6.1.2.1 Table of results (in order of increasing burn rate)-test run number, burn rate, particulate emission rate, efficiency (if determined), averages (indicate which test runs are used).

12.6.1.2.2 Summary of other data-test facility conditions, surface temperature averages, catalyst temperature averages, pretest fuel weights, test fuel charge weights, run times.

12.6.1.2.3 Discussion-Burn rate categories achieved, test run result selection, specific test run problems and solutions.

12.6.1.3 Process Description.

12.6.1.3.1 Wood heater dimensions-volume, height, width, lengths (or other linear dimensions), weight, volume adjustments.

12.6.1.3.2 Firebox configuration-air supply locations and operation, air supply introduction location, refractory location and dimensions, catalyst location, baffle and by-pass location and operation (include line drawings or photographs).

12.6.1.3.3 Process operation during test-air supply settings and adjustments, fuel bed adjustments, draft.

12.6.1.3.4 Test fuel-test fuel properties (moisture and temperature), test fuel crib description (include line drawing or photograph), test fuel loading density.

12.6.1.4 Sampling Locations.

12.6.1.4.1 Describe sampling location relative to wood heater. Include drawing or photograph.

12.6.1.5 Sampling and Analytical Procedures

12.6.1.5.1 Sampling methods-brief reference to operational and sampling procedures and optional and alternative procedures used.

12.6.1.5.2 Analytical methods-brief description of sample recovery and analysis procedures.

12.6.1.6 Quality Control and Assurance Procedures and Results

12.6.1.6.1 Calibration procedures and results-certification procedures, sampling and analysis procedures.

12.6.1.6.2 Test method quality control procedures-leak-checks, volume

meter checks, stratification (velocity) checks, proportionality results.

12.6.1.7 Appendices

12.6.1.7.1 Results and Example Calculations. Complete summary tables and accompanying examples of all calculations.

12.6.1.7.2 Raw Data. Copies of all uncorrected data sheets for sampling measurements, temperature records and sample recovery data. Copies of all pretest burn rate and wood heater temperature data.

12.6.1.7.3 Sampling and Analytical Procedures. Detailed description of procedures followed by laboratory personnel in conducting the certification test, emphasizing particular parts of the procedures differing from the methods (*e.g.*, approved alternatives).

12.6.1.7.4 Calibration Results. Summary of all calibrations, checks, and audits pertinent to certification test results with dates.

12.6.1.7.5 Participants. Test personnel, manufacturer representatives, and regulatory observers.

12.6.1.7.6 Sampling and Operation Records. Copies of uncorrected records of activities not included on raw data sheets (*e.g.*, wood heater door open times and durations).

12.6.1.7.7 Additional Information. Wood heater manufacturer's written instructions for operation during the certification test.

12.6.2.1 Wood Heater Identification. Report wood heater identification information. An example data form is shown in Figure 28–4.

12.6.2.2 Test Facility Information. Report test facility temperature, air velocity, and humidity information. An example data form is shown on Figure 28–4.

12.6.2.3 Test Equipment Calibration and Audit Information. Report calibration and audit results for the platform scale, test fuel balance, test fuel moisture meter, and sampling equipment including volume metering systems and gaseous analyzers.

12.6.2.4 Pretest Procedure Description. Report all pretest procedures including pretest fuel weight, burn rates, wood heater temperatures, and air supply settings. An example data form is shown on Figure 28–4.

12.6.2.5 Particulate Emission Data. Report a summary of test results for all test runs and the weighted average emission rate. Submit copies of all data sheets and other records collected during the testing. Submit examples of all calculations.

13.0 Method Performance, [Reserved]

14.0 Pollution Prevention, [Reserved]

15.0 Waste Management, [Reserved]

16.0 Alternative Procedures

16.1 Pellet Burning Heaters. Certification testing requirements and procedures for pellet burning wood heaters are identical to those for other wood heaters, with the following exceptions:

16.1.1 Test Fuel Properties. The test fuel shall be all wood pellets with a moisture content no greater than 20 percent on a wet basis (25 percent on a dry basis). Determine the wood moisture content with either ASTM D 2016–74 or 83, (Method A), ASTM D 4444–92, or ASTM D 4442–84 or 92 (all noted ASTM standards are incorporated by reference—see § 60.17).

16.1.2 Test Fuel Charge Specifications. The test fuel charge size shall be as per the manufacturer's written instructions for maintaining the desired burn rate.

16.1.3 Wood Heater Firebox Volume. The firebox volume need not be measured or determined for establishing the test fuel charge size. The firebox dimensions and other heater specifications needed to identify the heater for certification purposes shall be reported.

16.1.4 Heater Installation. Arrange the heater with the fuel supply hopper on the platform scale as described in Section 8.6.1.

16.1.5 Pretest Ignition. Start a fire in the heater as directed by the manufacturer's written instructions, and adjust the heater controls to achieve the desired burn rate. Operate the heater at the desired burn rate for at least 1 hour before the start of the test run.

16.1.6 Test Run. Complete a test run in each burn rate category as follows:

16.1.6.1 Test Run Start. When the wood heater has operated for at least 1 hour at the desired burn rate, add fuel to the supply hopper as necessary to complete the test run, record the weight of the fuel in the supply hopper (the wood heater weight), and start the test run. Add no additional fuel to the hopper during the test run.

Record all the wood heater surface temperatures, the initial sampling method measurement values, the time at the start of the test, and begin the emission sampling. Make no adjustments to the wood heater air supply or wood supply rate during the test run.

16.1.6.2 Data Recording. Record the fuel (wood heater) weight data, wood heater temperature and operational data, and emission sampling data as described in Section 8.12.2.

16.1.6.3 Test Run Completion. Continue emission sampling and wood heater operation for 2 hours. At the end of the test run, stop the particulate sampling, and record the final fuel weight, the run time, and all final measurement values, including all wood heater individual surface temperatures.

16.1.7 Calculations. Determine the burn rate using the difference between the initial and final fuel (wood heater) weights and the procedures described in Section 12.4. Complete the other calculations as described in Section 12.0.

17.0 References

Same as Method 5G, with the addition of the following:

1. Radian Corporation. OMNI Environmental Services, Inc., Cumulative Probability for a Given Burn Rate Based on Data Generated in the CONEG and BPA Studies. Package of materials submitted to the Fifth Session of the Regulatory Negotiation Committee, July 16–17, 1986.

18.0 Tables, Diagrams, Flowcharts, and Validation Data

TABLE 28–1.—BURN RATE WEIGHTED PROBABILITIES FOR CALCULATING WEIGHTED AVERAGE EMISSION RATES

Burn rate (kg/hr-dry)	Cumulative probability (P)	Burn rate (kg/hr-dry)	Cumulative probability (P)	Burn rate (kg/hr-dry)	Cumulative probability (P)
0.00	0.000	1.70	0.840	3.40	0.989
0.05	0.002	1.75	0.857	3.45	0.989
0.10	0.007	1.80	0.875	3.50	0.990
0.15	0.012	1.85	0.882	3.55	0.991
0.20	0.016	1.90	0.895	3.60	0.991
0.25	0.021	1.95	0.906	3.65	0.992
0.30	0.028	2.00	0.912	3.70	0.992
0.35	0.033	2.05	0.920	3.75	0.992

TABLE 28–1.—BURN RATE WEIGHTED PROBABILITIES FOR CALCULATING WEIGHTED AVERAGE EMISSION RATES—Continued

Burn rate (kg/hr-dry)	Cumulative probability (P)	Burn rate (kg/hr-dry)	Cumulative probability (P)	Burn rate (kg/hr-dry)	Cumulative probability (P)
0.40	0.041	2.10	0.925	3.80	0.993
0.45	0.054	2.15	0.932	3.85	0.994
0.50	0.065	2.20	0.936	3.90	0.994
0.55	0.086	2.25	0.940	3.95	0.994
0.60	0.100	2.30	0.945	4.00	0.994
0.65	0.121	2.35	0.951	4.05	0.995
0.70	0.150	2.40	0.956	4.10	0.995
0.75	0.185	2.45	0.959	4.15	0.995
0.80	0.220	2.50	0.964	4.20	0.995
0.85	0.254	2.55	0.968	4.25	0.995
0.90	0.300	2.60	0.972	4.30	0.996
0.95	0.328	2.65	0.975	4.35	0.996
1.00	0.380	2.70	0.977	4.40	0.996
1.05	0.407	2.75	0.979	4.45	0.996
1.10	0.460	2.80	0.980	4.50	0.996
1.15	0.490	2.85	0.981	4.55	0.996
1.20	0.550	2.90	0.982	4.60	0.996
1.25	0.572	2.95	0.984	4.65	0.996
1.30	0.620	3.00	0.984	4.70	0.996
1.35	0.654	3.05	0.985	4.75	0.997
1.40	0.695	3.10	0.986	4.80	0.997
1.45	0.722	3.15	0.987	4.85	0.997
1.50	0.750	3.20	0.987	4.90	0.997
1.55	0.779	3.25	0.988	4.95	0.997
1.60	0.800	3.30	0.988	≥5.00	1.000
1.65	0.825	3.35	0.989	.....	.....

BILLING CODE 6560–50–P

Appliance Identification

Appliance Manufacturer _____ Address ____

_____ Agent and phone number ____

_____ Name and Model number _____

_____ Weight _____

_____ Serial number _____

Design: Catalytic _____ Noncatalytic _____

Insert _____ Freestanding _____

Woodheater Description: (Attach figure showing air supplies and firebox configuration)

Materials of construction: _____

Air Introduction System: _____

Combustion Control Mechanisms: _____

Internal Baffles: _____

Other Features: _____

Catalyst Specifications

Manufacturer _____

Serial Number _____

Age _____(Hours)

Dimensions _____(in.)

Firebox Dimensions

Volume _____(ft^3)

Length _____(in.)

Width _____(in.)

Height _____(in.)

Adjustments (Describe) _____(in.)

Test Fuel Information

(for each Test Run)

Weight of Test Change _____(lb)

Number of 2 × 4's _____

Number of 4 × 4's _____

Length of test pieces _____(in.)

Fuel Grade (Certification) _____Fuel

Moisture Content _____(%)

Diagram or Photograph of Test Fuel Crib

Figure 28-1. Wood Heater and Test Fuel Information.

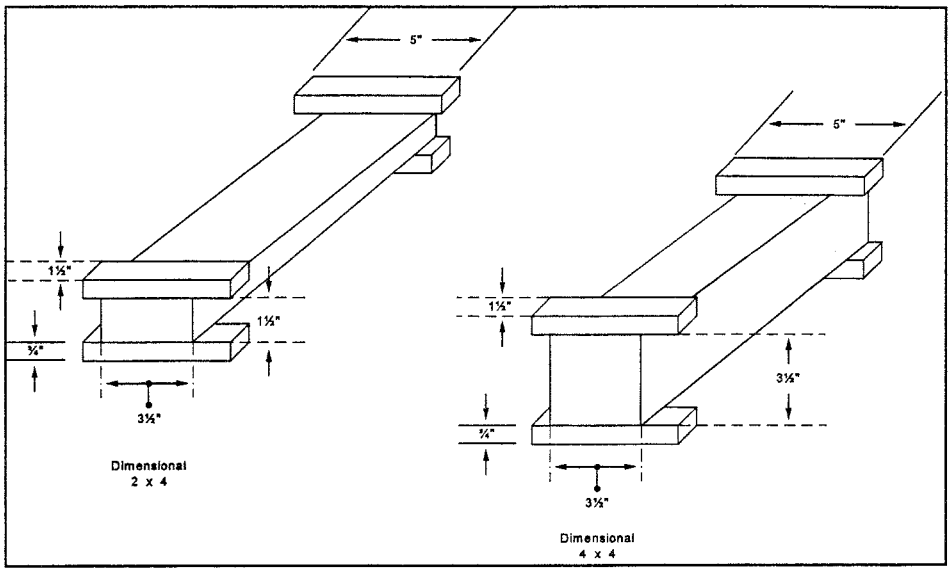

Figure 28-2. Test Fuel Spacer Dimensions.

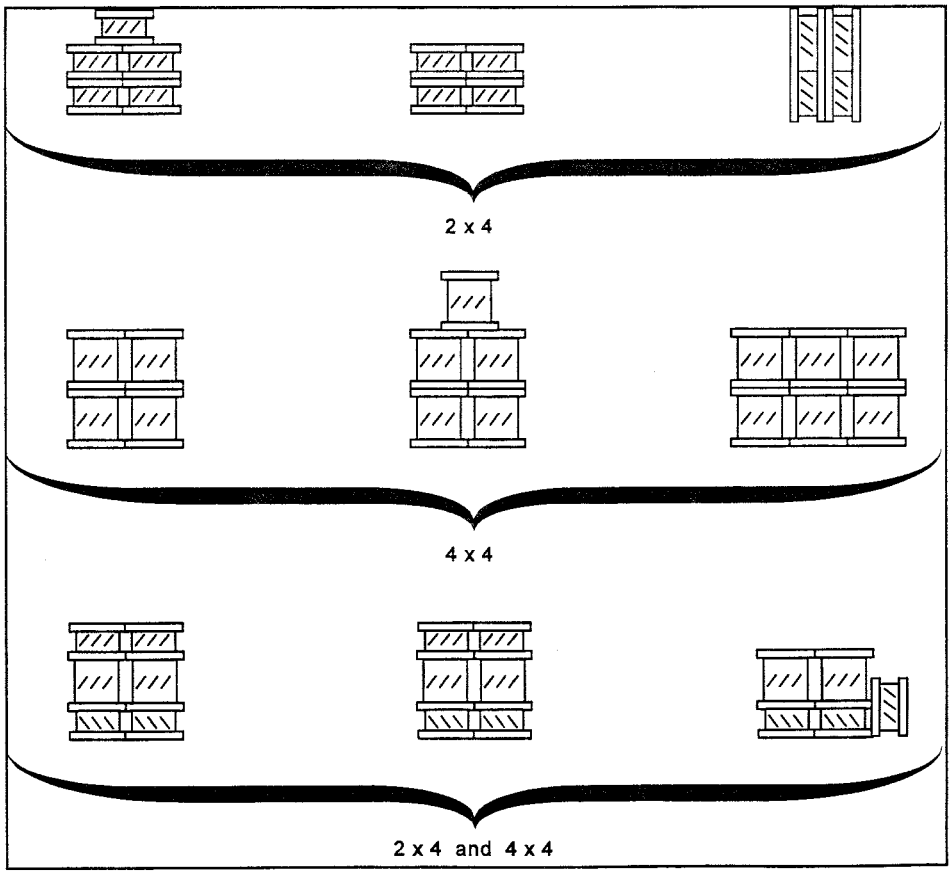

Figure 28-3. Test Fuel Crib Arrangements.

Sheet _____ of _____

Date _____

Operator _____

Sampling Method _____

Wood Heater Information

Manufacturer _____

Model _____

Primary Air Setting _____

Secondary Air Setting _____

Thermostat Setting _____

Other Settings _____

Test Run Information

Test Run No. _____

Burn Rate _____

Room Temperature before/after ____/____

Barometric Pressure before/after ____/____

Relative Humidity before/after ____/____

Room Air Velocity before/after ____/____

Surface Temp Average Pretest _____ end _____

Test Run Time (minutes)	Test Fuel Scale Reading (lb)	Surface Temperature					Catalyst Temperature		Flue Draft (in. H_2O)
							Inlet (°F)	Outlet (°F)	
(Pretest Period)									
(Test Run Start)									

Figure 28-4. Test Run Wood Heater Operation Data Sheet.

BILLING CODE 6560–50–C

Method 28A—Measurement of Air- to-Fuel Ratio and Mimimum Achievable Burn Rates for Wood-Fired Appliances

Note: This method does not include all or the specifications (*e.g.,* equipment and supplies) and procedures (*e.g.,* sampling and analytical) essential to its performance. Some material is incorporated by reference from other methods in this part. Therefore, to obtain reliable results, persons using this method should also have a thorough knowledge of at least the following additional test methods: Method 3, Method 3A, Method 5H, Method 6C, and Method 28.

1.0 Scope and Application

1.1 Analyte. Particulate matter (PM). No CAS number assigned.

1.2 Applicability. This method is applicable for the measurement of air-to-fuel ratios and minimum achievable burn rates, for determining whether a wood-fired appliance is an affected facility, as specified in 40 CFR 60.530.

1.3 Data Quality Objectives. Adherence to the requirements of this method will enhance the quality of the data obtained from air pollutant sampling methods.

2.0 Summary of Method

2.1 A gas sample is extracted from a location in the stack of a wood-fired appliance while the appliance is operating at a prescribed set of conditions. The gas sample is analyzed for carbon dioxide (CO_2), oxygen (O_2), and carbon monoxide (CO). These stack gas components are measured for determining the dry molecular weight of the exhaust gas. Total moles of exhaust gas are determined stoichiometrically. Air-to-fuel ratio is determined by relating the mass of dry combustion air to the mass of dry fuel consumed.

3.0 Definitions

Same as Method 28, Section 3.0, with the addition of the following:

3.1 Air-to-fuel ratio means the ratio of the mass of dry combustion air introduced into the firebox to the mass of dry fuel consumed (grams of dry air per gram of dry wood burned).

4.0 Interferences [Reserved]

5.0 Safety

5.1 Disclaimer. This method may involve hazardous materials, operations, and equipment. This test method may not address all of the safety problems associated with its use. It is the responsibility of the user of this test method to establish appropriate safety and health practices and to determine the applicability of regulatory limitations prior to performing this test method.

6.0 Equipment and Supplies

6.1 Test Facility. Insulated Solid Pack Chimney, Platform Scale and Monitor, Test Facility Temperature Monitor, Balance, Moisture Meter, Anemometer, Barometer, Draft Gauge, Humidity Gauge, Wood Heater Flue, and Test Facility. Same as Method 28, Sections 6.1, 6.2, and 6.4 to 6.12, respectively.

6.2 Sampling System. Probe, Condenser, Valve, Pump, Rate Meter, Flexible Bag, Pressure Gauge, and Vacuum Gauge. Same as Method 3, Sections 6.2.1 to 6.2.8, respectively. Alternatively, the sampling system described in Method 5H, Section 6.1 may be used.

6.3 Exhaust Gas Analysis. Use one or both of the following:

6.3.1 Orsat Analyzer. Same as Method 3, Section 6.1.3

6.3.2 Instrumental Analyzers. Same as Method 5H, Sections 6.1.3.4 and 6.1.3.5, for CO_2 and CO analyzers, except use a CO analyzer with a range of 0 to 5 percent and use a CO_2 analyzer with a range of 0 to 5 percent. Use an O_2 analyzer capable of providing a measure of O_2 in the range of 0 to 25 percent by volume at least once every 10 minutes.

7.0 Reagents and Standards

7.1 Test Fuel and Test Fuel Spacers. Same as Method 28, Sections 7.1 and 7.2, respectively.

7.2 Cylinder Gases. For each of the three analyzers, use the same concentration as specified in Sections 7.2.1, 7.2.2, and 7.2.3 of Method 6C.

8.0 Sample Collection, Preservation, Storage, and Transport

8.1 Wood Heater Air Supply Adjustments.

8.1.1 This section describes how dampers are to be set or adjusted and air inlet ports closed or sealed during Method 28A tests. The specifications in this section are intended to ensure that affected facility determinations are made on the facility configurations that could reasonably be expected to be employed by the user. They are also intended to prevent circumvention of the standard through the addition of an air port that would often be blocked off in actual use. These specifications are based on the assumption that consumers will remove such items as dampers or other closure mechanism stops if this can be done readily with household tools; that consumers will block air inlet passages not visible during normal operation of the appliance using aluminum tape or parts generally available at retail stores; and that consumers will cap off any threaded or flanged air inlets. They also assume that air leakage around glass doors, sheet metal joints or through inlet grilles visible during normal operation of the appliance would not be further blocked or taped off by a consumer.

8.1.2 It is not the intention of this section to cause an appliance that is clearly designed, intended, and, in most normal installations, used as a fireplace to be converted into a wood heater for purposes of applicability testing. Such a fireplace would be identifiable by such features as large or multiple glass doors or panels that are not gasketed, relatively unrestricted air inlets intended, in large part, to limit smoking and fogging of glass surfaces, and other aesthetic features not normally included in wood heaters.

8.1.3 Adjustable Air Supply Mechanisms. Any commercially available flue damper, other adjustment mechanism or other air inlet port that is designed, intended or otherwise reasonably expected to be adjusted or closed by consumers, installers, or dealers and which could restrict air into the firebox shall be set so as to achieve minimum air into the firebox (*i.e.,* closed off or set in the most closed position).

8.1.3.1 Flue dampers, mechanisms and air inlet ports which could reasonably be expected to be adjusted or closed would include:

8.1.3.1.1 All internal or externally adjustable mechanisms (including adjustments that affect the tightness of door fittings) that are accessible either before and/or after installation.

8.1.3.1.2 All mechanisms, other inlet ports, or inlet port stops that are identified in the owner's manual or in any dealer literature as being adjustable or alterable. For example, an inlet port that could be used to provide access to an outside air duct but which is identified as being closable through use of additional materials whether or not they are supplied with the facility.

8.1.3.1.3 Any combustion air inlet port or commercially available flue damper or mechanism stop, which would readily lend itself to closure by consumers who are handy with household tools by the removal of parts or the addition of parts generally available at retail stores (*e.g.,* addition of a pipe cap or plug, addition of a small metal plate to an inlet hole on a nondecorative sheet metal surface, or removal of riveted or screwed damper stops).

8.1.3.1.4 Any flue damper, other adjustment mechanisms or other air inlet ports that are found and documented in several (*e.g.,* a number

sufficient to reasonably conclude that the practice is not unique or uncommon) actual installations as having been adjusted to a more closed position, or closed by consumers, installers, or dealers.

8.1.4 Air Supply Adjustments During Test. The test shall be performed with all air inlets identified under this section in the closed or most closed position or in the configuration which otherwise achieves the lowest air inlet (*i.e.,* greatest blockage).

Note: For the purposes of this section, air flow shall not be minimized beyond the point necessary to maintain combustion or beyond the point that forces smoke into the room.

8.1.5 Notwithstanding Section 8.1.1, any flue damper, adjustment mechanism, or air inlet port (whether or not equipped with flue dampers or adjusting mechanisms) that is visible during normal operation of the appliance and which could not reasonably be closed further or blocked except through means that would significantly degrade the aesthetics of the facility (*e.g.,* through use of duct tape) will not be closed further or blocked.

8.2 Sampling System.

8.2.1 Sampling Location. Same as Method 5H, Section 8.1.2.

8.2.2 Sampling System Set Up. Set up the sampling equipment as described in Method 3, Section 8.1.

8.3 Wood Heater Installation, Test Facility Conditions, Wood Heater Firebox Volume, and Test Fuel Charge. Same as Method 28, Sections 8.4 and 8.6 to 8.8, respectively.

8.4 Pretest Ignition. Same as Method 28, Section 8.11. Set the wood heater air supply settings to achieve a burn rate in Category 1 or the lowest achievable burn rate (see Section 8.1).

8.5 Test Run. Same as Method 28, Section 8.12. Begin sample collection at the start of the test run as defined in Method 28, Section 8.12.1.

8.5.1 Gas Analysis.

8.5.1.1 If Method 3 is used, collect a minimum of two bag samples simultaneously at a constant sampling rate for the duration of the test run. A minimum sample volume of 30 liters (1.1 ft^3) per bag is recommended.

8.5.1.2 If instrumental gas concentration measurement procedures are used, conduct the gas measurement system performance tests, analyzer calibration, and analyzer calibration error check outlined in Method 6C, Sections 8.2.3, 8.2.4, 8.5, and 10.0, respectively. Sample at a constant rate for the duration of the test run.

8.5.2 Data Recording. Record wood heater operational data, test facility temperature, sample train flow rate, and fuel weight data at intervals of no greater than 10 minutes.

8.5.3 Test Run Completion. Same as Method 28, Section 8.13.

9.0 Quality Control

9.1 Data Validation. The following quality control procedure is suggested to provide a check on the quality of the data.

9.1.1 Calculate a fuel factor, F_o, using Equation 28A–1 in Section 12.2.

9.1.2 If CO is present in quantities measurable by this method, adjust the O_2 and CO_2 values before performing the calculation for F_o as shown in Section 12.3 and 12.4.

9.1.3 Compare the calculated F_o factor with the expected F_o range for wood (1.000—1.120). Calculated F_o values beyond this acceptable range should be investigated before accepting the test results. For example, the strength of the solutions in the gas analyzer and the analyzing technique should be checked by sampling and analyzing a known concentration, such as air. If no detectable or correctable measurement error can be identified, the test should be repeated. Alternatively, determine a range of air-to-fuel ratio results that could include the correct value by using an F_o value of 1.05 and calculating a potential range of CO_2 and O_2 values. Acceptance of such results will be based on whether the calculated range includes the exemption limit and the judgment of the Administrator.

9.2 Method 3 Analyses. Compare the results of the analyses of the two bag samples. If all the gas components (O_2, CO, and CO_2) values for the two analyses agree within 0.5 percent (*e.g.,* 6.0 percent O_2 for bag 1 and 6.5 percent O_2 for bag 2, agree within 0.5 percent), the results of the bag analyses may be averaged for the calculations in Section 12. If the analysis results do not agree within 0.5 percent for each component, calculate the air-to-fuel ratio using both sets of analyses and report the results.

10.0 Calibration and Standardization, [Reserved]

11.0 Analytical Procedures

11.1 Method 3 Integrated Bag Samples. Within 4 hours after the sample collection, analyze each bag sample for percent CO_2, O_2, and CO using an Orsat analyzer as described in Method 3, Section 11.0.

11.2 Instrumental Analyzers. Average the percent CO_2, CO, and O_2 values for the test run.

12.0 Data Analyses and Calculations

Carry out calculations, retaining at least one extra significant figure beyond that of the acquired data. Round off figure after the final calculation. Other forms of the equations may be used as long as they give equivalent results.

12.1 Nomenclature.

M_d = Dry molecular weight, g/g-mole (lb/lb-mole).

N_T = Total gram-moles of dry exhaust gas per kg of wood burned (lb-moles/lb).

$\%CO_2$ = Percent CO_2 by volume (dry basis).

%CO = Percent CO by volume (dry basis).

$\%N_2$ = Percent N_2 by volume (dry basis).

$\%O_2$ = Percent O2 by volume (dry basis).

Y_{HC} = Assumed mole fraction of HC (dry as CH_4) = 0.0088 for catalytic wood heaters; = 0.0132 for noncatalytic wood heaters. = 0.0080 for pellet-fired wood heaters.

Y_{CO} = Measured mole fraction of CO (*e.g.*, 1 percent CO = .01 mole fraction), g/g-mole (lb/lb-mole).

Y_{CO2} = Measured mole fraction of CO_{CO2} (*e.g.*, 10 percent CO_2 = .10 mole fraction), g/g-mole (lb/lb-mole).

0.280 = Molecular weight of N_2 or CO, divided by 100.

0.320 = Molecular weight of O_2 divided by 100.

0.440 = Molecular weight of CO_2 divided by 100.

20.9 = Percent O_2 by volume in ambient air.

42.5 = Gram-moles of carbon in 1 kg of dry wood assuming 51 percent carbon by weight dry basis (.0425 lb/lb-mole).

510 = Grams of carbon in exhaust gas per kg of wood burned.

1,000 = Grams in 1 kg.

12.2 Fuel Factor. Use Equation 28A–1 to calculate the fuel factor.

$$F_o = \frac{20.9 - \%O_2}{\%CO_2} \qquad \text{Eq. 28A-1}$$

12. 3 Adjusted $\%CO_2$. Use Equation 28A–2 to adjust CO_2 values if measurable CO is present.

$$\%CO_{2(adj)} = \%CO_2 + \%CO \qquad \text{Eq. 28A-2}$$

12.4 Adjusted $\%O_2$. Use Equation 28A–3 to adjust O_2 value if measurable CO is present.

$$\%O_{2(adj)} = \%O_2 - 0.5\%CO \qquad \text{Eq. 28A-3}$$

12.5 Dry Molecular Weight. Use Equation 28A–4 to calculate the dry molecular weight of the stack gas.

$$M_d = 0.440(\%CO_2) + 0.320(\%O_2) + 0.280(\%N_2 + \%CO) \qquad \text{Eq. 28A-4}$$

Note: The above equation does not consider argon in air (about 0.9 percent, molecular weight of 39.9). A negative error of about 0.4 percent is introduced. Argon may be included in the analysis using procedures subject to approval of the Administrator.

12.6 Dry Moles of Exhaust Gas. Use Equation 28A–5 to calculate the total moles of dry exhaust gas produced per kilogram of dry wood burned.

$$N_T = \frac{42.5}{\left(Y_{CO_2} Y_{CO} Y_{HC}\right)} \qquad \text{Eq. 28A-5}$$

12.7 Air-to-Fuel Ratio. Use Equation 28A–6 to calculate the air-to-fuel ratio on a dry mass basis.

$$A/F = \frac{(N_T \times M_d) - 510}{1{,}000} \qquad \text{Eq. 28A-6}$$

12.8 Burn Rate. Calculate the fuel burn rate as in Method 28, Section 12.4.

13.0 Method Performance, [Reserved]

14.0 Pollution Prevention, [Reserved]

15.0 Waste Management, [Reserved]

16.0 References

Same as Section 16.0 of Method 3 and Section 17 of Method 5G.

17.0 Tables, Diagrams, Flowcharts, and Validation Data, [Reserved]

Method 29—Determination of Metals Emissions From Stationary Sources

Note: This method does not include all of the specifications (*e.g.* equipment and supplies) and procedures (*e.g.,* sampling and analytical) essential to its performance. Some material is incorporated by reference from other methods in this part. Therefore, to obtain reliable results, persons using this method should have a thorough knowledge of at least the following additional test methods: Method 5 and Method 12.

1.0 Scope and Application

1.1 Analytes.

Analyte	CAS No.
Antimony (Sb)	7440–36–0
Arsenic (As)	7440–38–2
Barium (Ba)	7440–39–3
Beryllium (Be)	7440–41–7
Cadmium (Cd)	7440–43–9
Chromium (Cr)	7440–47–3
Cobalt (Co)	7440–48–4
Copper (Cu)	7440–50–8
Lead (Pb)	7439–92–1
Manganese (Mn)	7439–96–5
Mercury (Hg)	7439–97–6
Nickel (Ni)	7440–02–0
Phosphorus (P)	7723–14–0
Selenium (Se)	7782–49–2
Silver (Ag)	7440–22–4
Thallium (Tl)	7440–28–0
Zinc (Zn)	7440–66–6

1.2 Applicability. This method is applicable to the determination of metals emissions from stationary sources. This method may be used to determine particulate emissions in addition to the metals emissions if the prescribed procedures and precautions are followed.

1.2.1 Hg emissions can be measured, alternatively, using EPA Method 101A of Appendix B, 40 CFR Part 61. Method 101-A measures only Hg but it can be of special interest to sources which need to measure both Hg and Mn emissions.

2.0 Summary of Method

2.1 Principle. A stack sample is withdrawn isokinetically from the source, particulate emissions are collected in the probe and on a heated filter, and gaseous emissions are then collected in an aqueous acidic solution of hydrogen peroxide (analyzed for all metals including Hg) and an aqueous acidic solution of potassium permanganate (analyzed only for Hg). The recovered samples are digested, and appropriate fractions are analyzed for Hg by cold vapor atomic absorption spectroscopy (CVAAS) and for Sb, As, Ba, Be, Cd, Cr, Co, Cu, Pb, Mn, Ni, P, Se, Ag, Tl, and Zn by inductively coupled argon plasma emission spectroscopy (ICAP) or atomic absorption spectroscopy (AAS). Graphite furnace atomic absorption spectroscopy (GFAAS) is used for analysis of Sb, As, Cd, Co, Pb, Se, and Tl if these elements require greater analytical sensitivity than can be obtained by ICAP. If one so chooses, AAS may be used for analysis of all listed metals if the resulting in-stack method detection limits meet the goal of the testing program. Similarly, inductively coupled plasma-mass spectroscopy (ICP-MS) may be used for analysis of Sb, As, Ba, Be, Cd, Cr, Co, Cu, Pb, Mn, Ni, Ag, Tl and Zn.

3.0 Definitions. [Reserved]

4.0 Interferences

4.1 Iron (Fe) can be a spectral interference during the analysis of As, Cr, and Cd by ICAP. Aluminum (Al) can be a spectral interference during the analysis of As and Pb by ICAP. Generally, these interferences can be reduced by diluting the analytical sample, but such dilution raises the in-stack detection limits. Background and overlap corrections may be used to adjust for spectral interferences. Refer to Method 6010 of Reference 2 in Section 16.0 or the other analytical methods used for details on potential interferences to this method. For all GFAAS analyses, use matrix modifiers to limit interferences, and matrix match all standards.

5.0 Safety

5.1 Disclaimer. This method may involve hazardous materials, operations, and equipment. This test method may not address all of the safety problems associated with its use. It is the responsibility of the user of this test method to establish appropriate safety and health practices and to determine the applicability of regulatory limitations prior to performing this test method.

5.2 Corrosive Reagents. The following reagents are hazardous. Personal protective equipment and safe procedures are useful in preventing

chemical splashes. If contact occurs, immediately flush with copious amounts of water at least 15 minutes. Remove clothing under shower and decontaminate. Treat residual chemical burn as thermal burn.

5.2.1 Nitric Acid (HNO_3). Highly corrosive to eyes, skin, nose, and lungs. Vapors cause bronchitis, pneumonia, or edema of lungs. Reaction to inhalation may be delayed as long as 30 hours and still be fatal. Provide ventilation to limit exposure. Strong oxidizer. Hazardous reaction may occur with organic materials such as solvents.

5.2.2 Sulfuric Acid (H_2SO_4). Rapidly destructive to body tissue. Will cause third degree burns. Eye damage may result in blindness. Inhalation may be fatal from spasm of the larynx, usually within 30 minutes. May cause lung tissue damage with edema. 1 mg/m^3 for 8 hours will cause lung damage or, in higher concentrations, death. Provide ventilation to limit inhalation. Reacts violently with metals and organics.

5.2.3 Hydrochloric Acid (HC1). Highly corrosive liquid with toxic vapors. Vapors are highly irritating to eyes, skin, nose, and lungs, causing severe damage. May cause bronchitis, pneumonia, or edema of lungs. Exposure to concentrations of 0.13 to 0.2 percent can be lethal to humans in a few minutes. Provide ventilation to limit exposure. Reacts with metals, producing hydrogen gas.

5.2.4 Hydrofluoric Acid (HF). Highly corrosive to eyes, skin, nose, throat, and lungs. Reaction to exposure may be delayed by 24 hours or more. Provide ventilation to limit exposure.

5.2.5 Hydrogen Peroxide (H_2O_2). Irritating to eyes, skin, nose, and lungs. 30% H_2O_2 is a strong oxidizing agent. Avoid contact with skin, eyes, and combustible material. Wear gloves when handling.

5.2.6 Potassium Permanganate ($KMnO_4$). Caustic, strong oxidizer. Avoid bodily contact with.

5.2.7 Potassium Persulfate. Strong oxidizer. Avoid bodily contact with. Keep containers well closed and in a cool place.

5.3 Reaction Pressure. Due to the potential reaction of the potassium permanganate with the acid, there could be pressure buildup in the acidic $KMnO_4$ absorbing solution storage bottle. Therefore these bottles shall not be fully filled and shall be vented to relieve excess pressure and prevent explosion potentials. Venting is required, but not in a manner that will allow contamination of the solution. A No. 70–72 hole drilled in the container cap and Teflon liner has been used.

6.0 Equipment and Supplies

6.1 Sampling. A schematic of the sampling train is shown in Figure 29–1. It has general similarities to the Method 5 train.

6.1.1 Probe Nozzle (Probe Tip) and Borosilicate or Quartz Glass Probe Liner. Same as Method 5, Sections 6.1.1.1 and 6.1.1.2, except that glass nozzles are required unless alternate tips are constructed of materials that are free from contamination and will not interfere with the sample. If a probe tip other than glass is used, no correction to the sample test results to compensate for the nozzle's effect on the sample is allowed. Probe fittings of plastic such as Teflon, polypropylene, etc. are recommended instead of metal fittings to prevent contamination. If one chooses to do so, a single glass piece consisting of a combined probe tip and probe liner may be used.

6.1.2 Pitot Tube and Differential Pressure Gauge. Same as Method 2, Sections 6.1 and 6.2, respectively.

6.1.3 Filter Holder. Glass, same as Method 5, Section 6.1.1.5, except use a Teflon filter support or other non-metallic, non-contaminating support in place of the glass frit.

6.1.4 Filter Heating System. Same as Method 5, Section 6.1.1.6.

6.1.5 Condenser. Use the following system for condensing and collecting gaseous metals and determining the moisture content of the stack gas. The condensing system shall consist of four to seven impingers connected in series with leak-free ground glass fittings or other leak-free, non-contaminating fittings. Use the first impinger as a moisture trap. The second impinger (which is the first HNO_3/H_2O_2 impinger) shall be identical to the first impinger in Method 5. The third impinger (which is the second HNO_3/H_2O_2 impinger) shall be a Greenburg Smith impinger with the standard tip as described for the second impinger in Method 5, Section 6.1.1.8. The fourth (empty) impinger and the fifth and sixth (both acidified $KMnO_4$) impingers are the same as the first impinger in Method 5. Place a temperature sensor capable of measuring to within 1 °C (2 °F) at the outlet of the last impinger. If no Hg analysis is planned, then the fourth, fifth, and sixth impingers are not used.

6.1.6 Metering System, Barometer, and Gas Density Determination Equipment. Same as Method 5, Sections 6.1.1.9, 6.1.2, and 6.1.3, respectively.

6.1.7 Teflon Tape. For capping openings and sealing connections, if necessary, on the sampling train.

6.2 Sample Recovery. Same as Method 5, Sections 6.2.1 through 6.2.8 (Probe-Liner and Probe-Nozzle Brushes or Swabs, Wash Bottles, Sample Storage Containers, Petri Dishes, Glass Graduated Cylinder, Plastic Storage Containers, Funnel and Rubber Policeman, and Glass Funnel), respectively, with the following exceptions and additions:

6.2.1 Non-metallic Probe-Liner and Probe-Nozzle Brushes or Swabs. Use non-metallic probe-liner and probe-nozzle brushes or swabs for quantitative recovery of materials collected in the front-half of the sampling train.

6.2.2 Sample Storage Containers. Use glass bottles (see Section 8.1 of this Method) with Teflon-lined caps that are non-reactive to the oxidizing solutions, with capacities of 1000- and 500-ml, for storage of acidified $KMnO_4$—containing samples and blanks. Glass or polyethylene bottles may be used for other sample types.

6.2.3 Graduated Cylinder. Glass or equivalent.

6.2.4 Funnel. Glass or equivalent.

6.2.5 Labels. For identifying samples.

6.2.6 Polypropylene Tweezers and/or Plastic Gloves. For recovery of the filter from the sampling train filter holder.

6.3 Sample Preparation and Analysis.

6.3.1 Volumetric Flasks, 100-ml, 250-ml, and 1000-ml. For preparation of standards and sample dilutions.

6.3.2 Graduated Cylinders. For preparation of reagents.

6.3.3 Parr Bombs or Microwave Pressure Relief Vessels with Capping Station (CEM Corporation model or equivalent). For sample digestion.

6.3.4 Beakers and Watch Glasses. 250-ml beakers, with watch glass covers, for sample digestion.

6.3.5 Ring Stands and Clamps. For securing equipment such as filtration apparatus.

6.3.6 Filter Funnels. For holding filter paper.

6.3.7 Disposable Pasteur Pipets and Bulbs.

6.3.8 Volumetric Pipets.

6.3.9 Analytical Balance. Accurate to within 0.1 mg.

6.3.10 Microwave or Conventional Oven. For heating samples at fixed power levels or temperatures, respectively.

6.3.11 Hot Plates.

6.3.12 Atomic Absorption Spectrometer (AAS). Equipped with a background corrector.

6.3.12.1 Graphite Furnace Attachment. With Sb, As, Cd, Co, Pb, Se, and Tl hollow cathode lamps (HCLs) or electrodeless discharge lamps (EDLs). Same as Reference 2 in Section 16.0.

Methods 7041 (Sb), 7060 (As), 7131 (Cd), 7201 (Co), 7421 (Pb), 7740 (Se), and 7841 (Tl).

6.3.12.2 Cold Vapor Mercury Attachment. With a mercury HCL or EDL, an air recirculation pump, a quartz cell, an aerator apparatus, and a heat lamp or desiccator tube. The heat lamp shall be capable of raising the temperature at the quartz cell by 10°C above ambient, so that no condensation forms on the wall of the quartz cell. Same as Method 7470 in Reference 2 in Section 16.0. See **Note 2:** Section 11.1.3 for other acceptable approaches for analysis of Hg in which analytical detection limits of 0.002 ng/ml were obtained.

6.3.13 Inductively Coupled Argon Plasma Spectrometer. With either a direct or sequential reader and an alumina torch. Same as EPA Method 6010 in Reference 2 in Section 16.0.

6.3.14 Inductively Coupled Plasma-Mass Spectrometer.

Same as EPA Method 6020 in Reference 2 in Section 16.0.

7.0 Reagents and Standards

7.1 Unless otherwise indicated, it is intended that all reagents conform to the specifications established by the Committee on Analytical Reagents of the American Chemical Society, where such specifications are available. Otherwise, use the best available grade.

7.2 Sampling Reagents.

7.2.1 Sample Filters. Without organic binders. The filters shall contain less than 1.3 μg/in.^{2} of each of the metals to be measured. Analytical results provided by filter manufacturers stating metals content of the filters are acceptable. However, if no such results are available, analyze filter blanks for each target metal prior to emission testing. Quartz fiber filters meeting these requirements are recommended. However, if glass fiber filters become available which meet these requirements, they may be used. Filter efficiencies and unreactiveness to sulfur dioxide (SO_2) or sulfur trioxide (SO_3) shall be as described in Section 7.1.1 of Method 5.

7.2.2 Water. To conform to ASTM Specification D1193–77 or 91, Type II (incorporated by reference—see § 60.17). If necessary, analyze the water for all target metals prior to field use. All target metals should be less than 1 ng/ml.

7.2.3 HNO_3, Concentrated. Baker Instra-analyzed or equivalent.

7.2.4 HCl, Concentrated. Baker Instra-analyzed or equivalent.

7.2.5 H_2O_2, 30 Percent (V/V).

7.2.6 $KMnO_4$.

7.2.7 H_2SO_4, Concentrated.

7.2.8 Silica Gel and Crushed Ice. Same as Method 5, Sections 7.1.2 and 7.1.4, respectively.

7.3 Pretest Preparation of Sampling Reagents.

7.3.1 HNO_3/H_2O_2 Absorbing Solution, 5 Percent HNO_3/10 Percent H_2O_2. Add carefully with stirring 50 ml of concentrated HNO_3 to a 1000-ml volumetric flask containing approximately 500 ml of water, and then add carefully with stirring 333 ml of 30 percent H_2O_2. Dilute to volume with water. Mix well. This reagent shall contain less than 2 ng/ml of each target metal.

7.3.2 Acidic $KMnO_4$ Absorbing Solution, 4 Percent $KMnO_4$ (W/V), 10 Percent H_2SO_4 (V/V). Prepare fresh daily. Mix carefully, with stirring, 100 ml of concentrated H_2SO_4 into approximately 800 ml of water, and add water with stirring to make a volume of 1 liter: this solution is 10 percent H_2SO_4 (V/V). Dissolve, with stirring, 40 g of $KMnO_4$ into 10 percent H_2SO_4 (V/V) and add 10 percent H_2SO_4 (V/V) with stirring to make a volume of 1 liter. Prepare and store in glass bottles to prevent degradation. This reagent shall contain less than 2 ng/ml of Hg.

Precaution: To prevent autocatalytic decomposition of the permanganate solution, filter the solution through Whatman 541 filter paper.

7.3.3 HNO_3, 0.1 N. Add with stirring 6.3 ml of concentrated HNO_3 (70 percent) to a flask containing approximately 900 ml of water. Dilute to 1000 ml with water. Mix well. This reagent shall contain less than 2 ng/ml of each target metal.

7.3.4 HCl, 8 N. Carefully add with stirring 690 ml of concentrated HCl to a flask containing 250 ml of water. Dilute to 1000 ml with water. Mix well. This reagent shall contain less than 2 ng/ml of Hg.

7.4 Glassware Cleaning Reagents.

7.4.1 HNO_3, Concentrated. Fisher ACS grade or equivalent.

7.4.2 Water. To conform to ASTM Specifications D1193, Type II.

7.4.3 HNO_3, 10 Percent (V/V). Add with stirring 500 ml of concentrated HNO_3 to a flask containing approximately 4000 ml of water. Dilute to 5000 ml with water. Mix well. This reagent shall contain less than 2 ng/ml of each target metal.

7.5 Sample Digestion and Analysis Reagents. The metals standards, except Hg, may also be made from solid chemicals as described in Reference 3 in Section 16.0. Refer to References 1, 2, or 5 in Section 16.0 for additional information on Hg standards. The 1000 μg/ml Hg stock solution standard may be made according to Section 7.2.7 of Method 101A.

7.5.1 HCl, Concentrated.

7.5.2 HF, Concentrated.

7.5.3 HNO_3, Concentrated. Baker Instra-analyzed or equivalent.

7.5.4 HNO_3, 50 Percent (V/V). Add with stirring 125 ml of concentrated HNO_3 to 100 ml of water. Dilute to 250 ml with water. Mix well. This reagent shall contain less than 2 ng/ml of each target metal.

7.5.5 HNO_3, 5 Percent (V/V). Add with stirring 50 ml of concentrated HNO_3 to 800 ml of water. Dilute to 1000 ml with water. Mix well. This reagent shall contain less than 2 ng/ml of each target metal.

7.5.6 Water. To conform to ASTM Specifications D1193, Type II.

7.5.7 Hydroxylamine Hydrochloride and Sodium Chloride Solution. See Reference 2 In Section 16.0 for preparation.

7.5.8 Stannous Chloride. See Reference 2 in Section 16.0 for preparation.

7.5.9 $KMnO_4$, 5 Percent (W/V). See Reference 2 in Section 16.0 for preparation.

7.5.10 H_2SO_4, Concentrated.

7.5.11 Potassium Persulfate, 5 Percent (W/V). See Reference 2 in Section 16.0 for preparation.

7.5.12 Nickel Nitrate, $Ni(N0_3)_2$ $6H_20$.

7.5.13 Lanthanum Oxide, La_20_3.

7.5.14 Hg Standard (AAS Grade), 1000 μg/ml.

7.5.15 Pb Standard (AAS Grade), 1000 μg/ml.

7.5.16 As Standard (AAS Grade), 1000 μg/ml.

7.5.17 Cd Standard (AAS Grade), 1000 μg/ml.

7.5.18 Cr Standard (AAS Grade), 1000 μg/ml.

7.5.19 Sb Standard (AAS Grade), 1000 μg/ml.

7.5.20 Ba Standard (AAS Grade), 1000 μg/ml.

7.5.21 Be Standard (AAS Grade), 1000 μg/ml.

7.5.22 Co Standard (AAS Grade), 1000 μg/ml.

7.5.23 Cu Standard (AAS Grade), 1000 μg/ml.

7.5.24 Mn Standard (AAS Grade), 1000 μg/ml.

7.5.25 Ni Standard (AAS Grade), 1000 μg/ml.

7.5.26 P Standard (AAS Grade), 1000 μg/ml.

7.5.27 Se Standard (AAS Grade), 1000 μg/ml.

7.5.28 Ag Standard (AAS Grade), 1000 μg/ml.

7.5.29 Tl Standard (AAS Grade), 1000 μg/ml.

7.5.30 Zn Standard (AAS Grade), 1000 µg/ml.

7.5.31 Al Standard (AAS Grade), 1000 µg/ml.

7.5.32 Fe Standard (AAS Grade), 1000 µg/ml.

7.5.33 Hg Standards and Quality Control Samples. Prepare fresh weekly a 10 µg/ml intermediate Hg standard by adding 5 ml of 1000 µg/ml Hg stock solution prepared according to Method 101A to a 500-ml volumetric flask; dilute with stirring to 500 ml by first carefully adding 20 ml of 15 percent HNO_3 and then adding water to the 500-ml volume. Mix well. Prepare a 200 ng/ml working Hg standard solution fresh daily: add 5 ml of the 10 µg/ml intermediate standard to a 250-ml volumetric flask, and dilute to 250 ml with 5 ml of 4 percent $KMnO_4$, 5 ml of 15 percent HNO_3, and then water. Mix well. Use at least five separate aliquots of the working Hg standard solution and a blank to prepare the standard curve. These aliquots and blank shall contain 0.0, 1.0, 2.0, 3.0, 4.0, and 5.0 ml of the working standard solution containing 0, 200, 400, 600, 800, and 1000 ng Hg, respectively. Prepare quality control samples by making a separate 10 µg/ml standard and diluting until in the calibration range.

7.5.34 ICAP Standards and Quality Control Samples. Calibration standards for ICAP analysis can be combined into four different mixed standard solutions as follows:

MIXED STANDARD SOLUTIONS FOR ICAP ANALYSIS

Solution	Elements
I	As, Be, Cd, Mn, Pb, Se, Zn.
II	Ba, Co, Cu, Fe.
III	Al, Cr, Ni.
IV	Ag, P, Sb, Tl.

Prepare these standards by combining and diluting the appropriate volumes of the 1000 µg/ml solutions with 5 percent HNO_3. A minimum of one standard and a blank can be used to form each calibration curve. However, prepare a separate quality control sample spiked with known amounts of the target metals in quantities in the mid-range of the calibration curve. Suggested standard levels are 25 µg/ml for Al, Cr and Pb, 15 µg/ml for Fe, and 10 µg/ml for the remaining elements. Prepare any standards containing less than 1 µg/ml of metal on a daily basis. Standards containing greater than 1 µg/ml of metal should be stable for a minimum of 1 to 2 weeks. For ICP–MS, follow Method 6020 in EPA Publication SW–846 Third Edition (November 1986) including updates I, II, IIA, IIB and III, as incorporated by reference in § 60.17(i).

7.5.35 GFAAS Standards. Sb, As, Cd, Co, Pb, Se, and Tl. Prepare a 10 µg/ml standard by adding 1 ml of 1000 µg/ml standard to a 100-ml volumetric flask. Dilute with stirring to 100 ml with 10 percent HNO_3. For GFAAS, matrix match the standards. Prepare a 100 ng/ml standard by adding 1 ml of the 10 µg/ml standard to a 100-ml volumetric flask, and dilute to 100 ml with the appropriate matrix solution. Prepare other standards by diluting the 100 ng/ml standards. Use at least five standards to make up the standard curve. Suggested levels are 0, 10, 50, 75, and 100 ng/ml. Prepare quality control samples by making a separate 10 µg/ml standard and diluting until it is in the range of the samples. Prepare any standards containing less than 1 µg/ml of metal on a daily basis. Standards containing greater than 1 µg/ml of metal should be stable for a minimum of 1 to 2 weeks.

7.5.36 Matrix Modifiers.

7.5.36.1 Nickel Nitrate, 1 Percent (V/V). Dissolve 4.956 g of $Ni(N0_3)_2 \cdot 6H_20$ or other nickel compound suitable for preparation of this matrix modifier in approximately 50 ml of water in a 100-ml volumetric flask. Dilute to 100 ml with water.

7.5.36.2 Nickel Nitrate, 0.1 Percent (V/V). Dilute 10 ml of 1 percent nickel nitrate solution to 100 ml with water. Inject an equal amount of sample and this modifier into the graphite furnace during GFAAS analysis for As.

7.5.36.3 Lanthanum. Carefully dissolve 0.5864 g of La_20_3 in 10 ml of concentrated $HN0_3$, and dilute the solution by adding it with stirring to approximately 50 ml of water. Dilute to 100 ml with water, and mix well. Inject an equal amount of sample and this modifier into the graphite furnace during GFAAS analysis for Pb.

7.5.37 Whatman 40 and 541 Filter Papers (or equivalent). For filtration of digested samples.

8.0 Sample Collection, Preservation, Transport, and Storage

8.1 Sampling. The complexity of this method is such that, to obtain reliable results, both testers and analysts must be trained and experienced with the test procedures, including source sampling; reagent preparation and handling; sample handling; safety equipment and procedures; analytical calculations; reporting; and the specific procedural descriptions throughout this method.

8.1.1 Pretest Preparation. Follow the same general procedure given in Method 5, Section 8.1, except that, unless particulate emissions are to be determined, the filter need not be desiccated or weighed. First, rinse all sampling train glassware with hot tap water and then wash in hot soapy water. Next, rinse glassware three times with tap water, followed by three additional rinses with water. Then soak all glassware in a 10 percent (V/V) nitric acid solution for a minimum of 4 hours, rinse three times with water, rinse a final time with acetone, and allow to air dry. Cover all glassware openings where contamination can occur until the sampling train is assembled for sampling.

8.1.2 Preliminary Determinations. Same as Method 5, Section 8.1.2.

8.1.3 Preparation of Sampling Train.

8.1.3.1 Set up the sampling train as shown in Figure 29–1. Follow the same general procedures given in Method 5, Section 8.3, except place 100 ml of the HNO_3/H_2O_2 solution (Section 7.3.1 of this method) in each of the second and third impingers as shown in Figure 29–1. Place 100 ml of the acidic $KMnO_4$ absorbing solution (Section 7.3.2 of this method) in each of the fifth and sixth impingers as shown in Figure 29–1, and transfer approximately 200 to 300 g of pre-weighed silica gel from its container to the last impinger. Alternatively, the silica gel may be weighed directly in the impinger just prior to final train assembly.

8.1.3.2 Based on the specific source sampling conditions, the use of an empty first impinger can be eliminated if the moisture to be collected in the impingers will be less than approximately 100 ml.

8.1.3.3 If Hg analysis will not be performed, the fourth, fifth, and sixth impingers as shown in Figure 29–1 are not required.

8.1.3.4 To insure leak-free sampling train connections and to prevent possible sample contamination problems, use Teflon tape or other non-contaminating material instead of silicone grease.

Precaution: Exercise extreme care to prevent contamination within the train. Prevent the acidic $KMnO_4$ from contacting any glassware that contains sample material to be analyzed for Mn. Prevent acidic H_2O_2 from mixing with the acidic $KMnO_4$.

8.1.4 Leak-Check Procedures. Follow the leak-check procedures given in Method 5, Section 8.4.2 (Pretest Leak-Check), Section 8.4.3 (Leak-Checks During the Sample Run), and Section 8.4.4 (Post-Test Leak-Checks).

8.1.5 Sampling Train Operation. Follow the procedures given in Method 5, Section 8.5. When sampling for Hg, use a procedure analogous to that

described in Section 8.1 of Method 101A, 40 CFR Part 61, Appendix B, if necessary to maintain the desired color in the last acidified permanganate impinger. For each run, record the data required on a data sheet such as the one shown in Figure 5–3 of Method 5.

8.1.6 Calculation of Percent Isokinetic. Same as Method 5, Section 12.11.

8.2 Sample Recovery.

8.2.1 Begin cleanup procedures as soon as the probe is removed from the stack at the end of a sampling period. The probe should be allowed to cool prior to sample recovery. When it can be safely handled, wipe off all external particulate matter near the tip of the probe nozzle and place a rinsed, non-contaminating cap over the probe nozzle to prevent losing or gaining particulate matter. Do not cap the probe tip tightly while the sampling train is cooling; a vacuum can form in the filter holder with the undesired result of drawing liquid from the impingers onto the filter.

8.2.2 Before moving the sampling train to the cleanup site, remove the probe from the sampling train and cap the open outlet. Be careful not to lose any condensate that might be present. Cap the filter inlet where the probe was fastened. Remove the umbilical cord from the last impinger and cap the impinger. Cap the filter holder outlet and impinger inlet. Use non-contaminating caps, whether ground-glass stoppers, plastic caps, serum caps, or Teflon® tape to close these openings.

8.2.3 Alternatively, the following procedure may be used to disassemble the train before the probe and filter holder/oven are completely cooled: Initially disconnect the filter holder outlet/impinger inlet and loosely cap the open ends. Then disconnect the probe from the filter holder or cyclone inlet and loosely cap the open ends. Cap the probe tip and remove the umbilical cord as previously described.

8.2.4 Transfer the probe and filter-impinger assembly to a cleanup area that is clean and protected from the wind and other potential causes of contamination or loss of sample. Inspect the train before and during disassembly and note any abnormal conditions. Take special precautions to assure that all the items necessary for recovery do not contaminate the samples. The sample is recovered and treated as follows (see schematic in Figures 29–2a and 29–2b):

8.2.5 Container No. 1 (Sample Filter). Carefully remove the filter from the filter holder and place it in its labeled petri dish container. To handle the filter, use either acid-washed polypropylene or Teflon coated tweezers or clean, disposable surgical gloves rinsed with water and dried. If it is necessary to fold the filter, make certain the particulate cake is inside the fold. Carefully transfer the filter and any particulate matter or filter fibers that adhere to the filter holder gasket to the petri dish by using a dry (acid-cleaned) nylon bristle brush. Do not use any metal-containing materials when recovering this train. Seal the labeled petri dish.

8.2.6 Container No. 2 (Acetone Rinse). Perform this procedure only if a determination of particulate emissions is to be made. Quantitatively recover particulate matter and any condensate from the probe nozzle, probe fitting, probe liner, and front half of the filter holder by washing these components with a total of 100 ml of acetone, while simultaneously taking great care to see that no dust on the outside of the probe or other surfaces gets in the sample. The use of exactly 100 ml is necessary for the subsequent blank correction procedures. Distilled water may be used instead of acetone when approved by the Administrator and shall be used when specified by the Administrator; in these cases, save a water blank and follow the Administrator's directions on analysis.

8.2.6.1 Carefully remove the probe nozzle, and clean the inside surface by rinsing with acetone from a wash bottle while brushing with a non-metallic brush. Brush until the acetone rinse shows no visible particles, then make a final rinse of the inside surface with acetone.

8.2.6.2 Brush and rinse the sample exposed inside parts of the probe fitting with acetone in a similar way until no visible particles remain. Rinse the probe liner with acetone by tilting and rotating the probe while squirting acetone into its upper end so that all inside surfaces will be wetted with acetone. Allow the acetone to drain from the lower end into the sample container. A funnel may be used to aid in transferring liquid washings to the container. Follow the acetone rinse with a non-metallic probe brush. Hold the probe in an inclined position, squirt acetone into the upper end as the probe brush is being pushed with a twisting action three times through the probe. Hold a sample container underneath the lower end of the probe, and catch any acetone and particulate matter which is brushed through the probe until no visible particulate matter is carried out with the acetone or until none remains in the probe liner on visual inspection. Rinse the brush with acetone, and quantitatively collect these washings in the sample container. After the brushing, make a final acetone rinse of the probe as described above.

8.2.6.3 It is recommended that two people clean the probe to minimize sample losses. Between sampling runs, keep brushes clean and protected from contamination. Clean the inside of the front-half of the filter holder by rubbing the surfaces with a non-metallic brush and rinsing with acetone. Rinse each surface three times or more if needed to remove visible particulate. Make a final rinse of the brush and filter holder. After all acetone washings and particulate matter have been collected in the sample container, tighten the lid so that acetone will not leak out when shipped to the laboratory. Mark the height of the fluid level to determine whether or not leakage occurred during transport. Clearly label the container to identify its contents.

8.2.7 Container No. 3 (Probe Rinse). Keep the probe assembly clean and free from contamination during the probe rinse. Rinse the probe nozzle and fitting, probe liner, and front-half of the filter holder thoroughly with a total of 100 ml of 0.1 N HNO_3, and place the wash into a sample storage container. Perform the rinses as applicable and generally as described in Method 12, Section 8.7.1. Record the volume of the rinses. Mark the height of the fluid level on the outside of the storage container and use this mark to determine if leakage occurs during transport. Seal the container, and clearly label the contents. Finally, rinse the nozzle, probe liner, and front-half of the filter holder with water followed by acetone, and discard these rinses.

Note: The use of a total of exactly 100 ml is necessary for the subsequent blank correction procedures.

8.2.8 Container No. 4 (Impingers 1 through 3, Moisture Knockout Impinger, when used, HNO_3/H_2O_2 Impingers Contents and Rinses). Due to the potentially large quantity of liquid involved, the tester may place the impinger solutions from impingers 1 through 3 in more than one container, if necessary. Measure the liquid in the first three impingers to within 0.5 ml using a graduated cylinder. Record the volume. This information is required to calculate the moisture content of the sampled flue gas. Clean each of the first three impingers, the filter support, the back half of the filter housing, and connecting glassware by thoroughly rinsing with 100 ml of 0.1 N HNO_3 using the procedure as applicable in Method 12, Section 8.7.3.

Note: The use of exactly 100 ml of 0.1 N HNO_3 rinse is necessary for the subsequent blank correction procedures. Combine the rinses and impinger solutions, measure and

record the final total volume. Mark the height of the fluid level, seal the container, and clearly label the contents.

8.2.9 Container Nos. 5A (0.1 N HNO_3), 5B ($KMnO_4/H_2SO_4$ absorbing solution), and 5C (8 N HCl rinse and dilution).

8.2.9.1 When sampling for Hg, pour all the liquid from the impinger (normally impinger No. 4) that immediately preceded the two permanganate impingers into a graduated cylinder and measure the volume to within 0.5 ml. This information is required to calculate the moisture content of the sampled flue gas. Place the liquid in Container No. 5A. Rinse the impinger with exactly 100 ml of 0.1 N HNO_3 and place this rinse in Container No. 5A.

8.2.9.2 Pour all the liquid from the two permanganate impingers into a graduated cylinder and measure the volume to within 0.5 ml. This information is required to calculate the moisture content of the sampled flue gas. Place this acidic $KMnO_4$ solution into Container No. 5B. Using a total of exactly 100 ml of fresh acidified $KMnO_4$ solution for all rinses (approximately 33 ml per rinse), rinse the two permanganate impingers and connecting glassware a minimum of three times. Pour the rinses into Container No. 5B, carefully assuring transfer of all loose precipitated materials from the two impingers. Similarly, using 100 ml total of water, rinse the permanganate impingers and connecting glass a minimum of three times, and pour the rinses into Container 5B, carefully assuring transfer of any loose precipitated material. Mark the height of the fluid level, and clearly label the contents. Read the *Precaution:* in Section 7.3.2.

Note: Due to the potential reaction of $KMnO_4$ with acid, pressure buildup can occur in the sample storage bottles. Do not fill these bottles completely and take precautions to relieve excess pressure. A No. 70–72 hole drilled in the container cap and Teflon liner has been used successfully.

8.2.9.3 If no visible deposits remain after the water rinse, no further rinse is necessary. However, if deposits remain on the impinger surfaces, wash them with 25 ml of 8 N HCl, and place the wash in a separate sample container labeled No. 5C containing 200 ml of water. First, place 200 ml of water in the container. Then wash the impinger walls and stem with the HCl by turning the impinger on its side and rotating it so that the HCl contacts all inside surfaces. Use a total of only 25 ml of 8 N HCl for rinsing *both permanganate impingers combined.* Rinse the first impinger, then pour the actual rinse used for the first impinger into the second impinger for its rinse. Finally, pour the 25 ml of 8 N HCl rinse carefully into the container. Mark the height of the fluid level on the outside of the container to determine if leakage occurs during transport.

8.2.10 Container No. 6 (Silica Gel). Note the color of the indicating silica gel to determine whether it has been completely spent and make a notation of its condition. Transfer the silica gel from its impinger to its original container and seal it. The tester may use a funnel to pour the silica gel and a rubber policeman to remove the silica gel from the impinger. The small amount of particles that might adhere to the impinger wall need not be removed. Do not use water or other liquids to transfer the silica gel since weight gained in the silica gel impinger is used for moisture calculations. Alternatively, if a balance is available in the field, record the weight of the spent silica gel (or silica gel plus impinger) to the nearest 0.5 g.

8.2.11 Container No. 7 (Acetone Blank). If particulate emissions are to be determined, at least once during each field test, place a 100-ml portion of the acetone used in the sample recovery process into a container labeled No. 7. Seal the container.

8.2.12 Container No. 8A (0.1 N HNO_3 Blank). At least once during each field test, place 300 ml of the 0.1 N HNO_3 solution used in the sample recovery process into a container labeled No. 8A. Seal the container.

8.2.13 Container No. 8B (Water Blank). At least once during each field test, place 100 ml of the water used in the sample recovery process into a container labeled No. 8B. Seal the container.

8.2.14 Container No. 9 (5 Percent HNO_3/10 Percent H_2O_2 Blank). At least once during each field test, place 200 ml of the 5 Percent HNO_3/10 Percent H_2O_2 solution used as the nitric acid impinger reagent into a container labeled No. 9. Seal the container.

8.2.15 Container No. 10 (Acidified $KMnO_4$ Blank). At least once during each field test, place 100 ml of the acidified $KMnO_4$ solution used as the impinger solution and in the sample recovery process into a container labeled No. 10. Prepare the container as described in Section 8.2.9.2. Read the *Precaution*: in Section 7.3.2 and read the **NOTE** in Section 8.2.9.2.

8.2.16 Container No. 11 (8 N HCl Blank). At least once during each field test, place 200 ml of water into a sample container labeled No. 11. Then carefully add with stirring 25 ml of 8 N HCl. Mix well and seal the container.

8.2.17 Container No. 12 (Sample Filter Blank). Once during each field test, place into a petri dish labeled No. 12 three unused blank filters from the same lot as the sampling filters. Seal the petri dish.

8.3 Sample Preparation. Note the level of the liquid in each of the containers and determine if any sample was lost during shipment. If a noticeable amount of leakage has occurred, either void the sample or use methods, subject to the approval of the Administrator, to correct the final results. A diagram illustrating sample preparation and analysis procedures for each of the sample train components is shown in Figure 29–3.

8.3.1 Container No. 1 (Sample Filter).

8.3.1.1 If particulate emissions are being determined, first desiccate the filter and filter catch without added heat (do not heat the filters to speed the drying) and weigh to a constant weight as described in Section 11.2.1 of Method 5.

8.3.1.2 Following this procedure, or initially, if particulate emissions are not being determined in addition to metals analysis, divide the filter with its filter catch into portions containing approximately 0.5 g each. Place the pieces in the analyst's choice of either individual microwave pressure relief vessels or Parr Bombs. Add 6 ml of concentrated HNO_3 and 4 ml of concentrated HF to each vessel. For microwave heating, microwave the samples for approximately 12 to 15 minutes total heating time as follows: heat for 2 to 3 minutes, then turn off the microwave for 2 to 3 minutes, then heat for 2 to 3 minutes, etc., continue this alternation until the 12 to 15 minutes total heating time are completed (this procedure should comprise approximately 24 to 30 minutes at 600 watts). Microwave heating times are approximate and are dependent upon the number of samples being digested simultaneously. Sufficient heating is evidenced by sorbent reflux within the vessel. For conventional heating, heat the Parr Bombs at 140 °C (285 °F) for 6 hours. Then cool the samples to room temperature, and combine with the acid digested probe rinse as required in Section 8.3.3.

8.3.1.3 If the sampling train includes an optional glass cyclone in front of the filter, prepare and digest the cyclone catch by the procedures described in Section 8.3.1.2 and then combine the digestate with the digested filter sample.

8.3.2 Container No. 2 (Acetone Rinse). Note the level of liquid in the

container and confirm on the analysis sheet whether or not leakage occurred during transport. If a noticeable amount of leakage has occurred, either void the sample or use methods, subject to the approval of the Administrator, to correct the final results. Measure the liquid in this container either volumetrically within 1 ml or gravimetrically within 0.5 g. Transfer the contents to an acid-cleaned, tared 250-ml beaker and evaporate to dryness at ambient temperature and pressure. If particulate emissions are being determined, desiccate for 24 hours without added heat, weigh to a constant weight according to the procedures described in Section 11.2.1 of Method 5, and report the results to the nearest 0.1 mg. Redissolve the residue with 10 ml of concentrated HNO_3. Quantitatively combine the resultant sample, including all liquid and any particulate matter, with Container No. 3 before beginning Section 8.3.3.

8.3.3 Container No. 3 (Probe Rinse). Verify that the pH of this sample is 2 or lower. If it is not, acidify the sample by careful addition with stirring of concentrated HNO_3 to pH 2. Use water to rinse the sample into a beaker, and cover the beaker with a ribbed watch glass. Reduce the sample volume to approximately 20 ml by heating on a hot plate at a temperature just below boiling. Digest the sample in microwave vessels or Parr Bombs by quantitatively transferring the sample to the vessel or bomb, carefully adding the 6 ml of concentrated HNO_3, 4 ml of concentrated HF, and then continuing to follow the procedures described in Section 8.3.1.2. Then combine the resultant sample directly with the acid digested portions of the filter prepared previously in Section 8.3.1.2. The resultant combined sample is referred to as *''Sample Fraction 1''.* Filter the combined sample using Whatman 541 filter paper. Dilute to 300 ml (or the appropriate volume for the expected metals concentration) with water. This diluted sample is *''Analytical Fraction 1''.* Measure and record the volume of Analytical Fraction 1 to within 0.1 ml. Quantitatively remove a 50-ml aliquot and label as *''Analytical Fraction 1B''.* Label the remaining 250-ml portion as *''Analytical Fraction 1A''.* Analytical Fraction 1A is used for ICAP or AAS analysis for all desired metals except Hg. Analytical Fraction 1B is used for the determination of front-half Hg.

8.3.4 Container No. 4 (Impingers 1–3). Measure and record the total volume of this sample to within 0.5 ml and label it *''Sample Fraction 2''.* Remove a 75- to 100-ml aliquot for Hg analysis and label the aliquot *''Analytical Fraction 2B''.* Label the remaining portion of Container No. 4 as *''Sample Fraction 2A''.* Sample Fraction 2A defines the volume of Analytical Fraction 2A *prior* to digestion. All of Sample Fraction 2A is digested to produce *''Analytical Fraction 2A''.* Analytical Fraction 2A defines the volume of Sample Fraction 2A *after* its digestion and the volume of Analytical Fraction 2A is normally 150 ml. Analytical Fraction 2A is analyzed for all metals except Hg. Verify that the pH of Sample Fraction 2A is 2 or lower. If necessary, use concentrated HNO_3 by careful addition and stirring to lower Sample Fraction 2A to pH 2. Use water to rinse Sample Fraction 2A into a beaker and then cover the beaker with a ribbed watchglass. Reduce Sample Fraction 2A to approximately 20 ml by heating on a hot plate at a temperature just below boiling. Then follow either of the digestion procedures described in Sections 8.3.4.1 or 8.3.4.2.

8.3.4.1 Conventional Digestion Procedure. Add 30 ml of 50 percent HNO_3, and heat for 30 minutes on a hot plate to just below boiling. Add 10 ml of 3 percent H_2O_2 and heat for 10 more minutes. Add 50 ml of hot water, and heat the sample for an additional 20 minutes. Cool, filter the sample, and dilute to 150 ml (or the appropriate volume for the expected metals concentrations) with water. This dilution produces Analytical Fraction 2A. Measure and record the volume to within 0.1 ml.

8.3.4.2 Microwave Digestion Procedure. Add 10 ml of 50 percent HNO_3 and heat for 6 minutes total *heating* time in alternations of 1 to 2 minutes at 600 Watts followed by 1 to 2 minutes with no power, etc., similar to the procedure described in Section 8.3.1. Allow the sample to cool. Add 10 ml of 3 percent H_2O_2 and heat for 2 more minutes. Add 50 ml of hot water, and heat for an additional 5 minutes. Cool, filter the sample, and dilute to 150 ml (or the appropriate volume for the expected metals concentrations) with water. This dilution produces Analytical Fraction 2A. Measure and record the volume to within 0.1 ml.

Note: All microwave heating times given are approximate and are dependent upon the number of samples being digested at a time. Heating times as given above have been found acceptable for simultaneous digestion of up to 12 individual samples. Sufficient heating is evidenced by solvent reflux within the vessel.

8.3.5 Container No. 5A (Impinger 4), Container Nos. 5B and 5C (Impingers 5 and 6). Keep the samples in Containers Nos. 5A, 5B, and 5C separate from each other. Measure and record the volume of 5A to within 0.5 ml. Label the contents of Container No. 5A to be Analytical Fraction 3A. To remove any brown MnO_2 precipitate from the contents of Container No. 5B, filter its contents through Whatman 40 filter paper into a 500 ml volumetric flask and dilute to volume with water. Save the filter for digestion of the brown MnO_2 precipitate. Label the 500 ml filtrate from Container No. 5B to be Analytical Fraction 3B. Analyze Analytical Fraction 3B for Hg within 48 hours of the filtration step. Place the saved filter, which was used to remove the brown MnO_2 precipitate, into an appropriately sized *vented* container, which will allow release of any gases including chlorine formed when the filter is digested. In a laboratory hood which will remove any gas produced by the digestion of the MnO_2, add 25 ml of 8 N HCl to the filter and allow to digest for a minimum of 24 hours at room temperature. Filter the contents of Container No. 5C through a Whatman 40 filter into a 500-ml volumetric flask. Then filter the result of the digestion of the brown MnO_2 from Container No. 5B through a Whatman 40 filter into the same 500-ml volumetric flask, and dilute and mix well to volume with water. Discard the Whatman 40 filter. Mark this combined 500-ml dilute HCl solution as Analytical Fraction 3C.

8.3.6 Container No. 6 (Silica Gel). Weigh the spent silica gel (or silica gel plus impinger) to the nearest 0.5 g using a balance.

9.0 Quality Control

9.1 Field Reagent Blanks, if analyzed. Perform the digestion and analysis of the blanks in Container Nos. 7 through 12 that were produced in Sections 8.2.11 through 8.2.17, respectively. For Hg field reagent blanks, use a 10 ml aliquot for digestion and analysis.

9.1.1 Digest and analyze one of the filters from Container No. 12 per Section 8.3.1, 100 ml from Container No. 7 per Section 8.3.2, and 100 ml from Container No. 8A per Section 8.3.3. This step produces blanks for Analytical Fractions 1A and 1B.

9.1.2 Combine 100 ml of Container No. 8A with 200 ml from Container No. 9, and digest and analyze the resultant volume per Section 8.3.4. This step produces blanks for Analytical Fractions 2A and 2B.

9.1.3 Digest and analyze a 100-ml portion of Container No. 8A to produce a blank for Analytical Fraction 3A.

9.1.4 Combine 100 ml from Container No. 10 with 33 ml from Container No. 8B to produce a blank for Analytical Fraction 3B. Filter the resultant 133 ml as described for

Container No. 5B in Section 8.3.5, except do not dilute the 133 ml. Analyze this blank for Hg within 48 hr of the filtration step, and use 400 ml as the blank volume when calculating the blank mass value. Use the actual volumes of the other analytical blanks when calculating their mass values.

9.1.5 Digest the filter that was used to remove any brown MnO_2 precipitate from the blank for Analytical Fraction 3B by the same procedure as described in Section 8.3.5 for the similar sample filter. Filter the digestate and the contents of Container No. 11 through Whatman 40 paper into a 500-ml volumetric flask, and dilute to volume with water. These steps produce a blank for Analytical Fraction 3C.

9.1.6 Analyze the blanks for Analytical Fraction Blanks 1A and 2A per Section 11.1.1 and/or Section 11.1.2. Analyze the blanks for Analytical Fractions 1B, 2B, 3A, 3B, and 3C per Section 11.1.3. Analysis of the blank for Analytical Fraction 1A produces the front-half reagent blank correction values for the desired metals except for Hg; Analysis of the blank for Analytical Fraction 1B produces the front-half reagent blank correction value for Hg. Analysis of the blank for Analytical Fraction 2A produces the back-half reagent blank correction values for all of the desired metals except for Hg, while separate analyses of the blanks for Analytical Fractions 2B, 3A, 3B, and 3C produce the back-half reagent blank correction value for Hg.

9.2 Quality Control Samples. Analyze the following quality control samples.

9.2.1 ICAP and ICP–MS Analysis. Follow the respective quality control descriptions in Section 8 of Methods 6010 and 6020 in EPA Publication SW–846 Third Edition (November 1986) including updates I, II, IIA, IIB and III, as incorporated by reference in § 60.17(i). For the purposes of a source test that consists of three sample runs, modify those requirements to include the following: two instrument check standard runs, two calibration blank runs, one interference check sample at the beginning of the analysis (analyze by Method of Standard Additions unless within 25 percent), one quality control sample to check the accuracy of the calibration standards (required to be within 25 percent of calibration), and one duplicate analysis (required to be within 20 percent of average or repeat all analyses).

9.2.2 Direct Aspiration AAS and/or GFAAS Analysis for Sb, As, Ba, Be, Cd, Cu, Cr, Co, Pb, Ni, Mn, Hg, P, Se, Ag, Tl, and Zn. Analyze all samples in duplicate. Perform a matrix spike on at least one front-half sample and one back-half sample, or one combined sample. If recoveries of less than 75 percent or greater than 125 percent are obtained for the matrix spike, analyze each sample by the Method of Standard Additions. Analyze a quality control sample to check the accuracy of the calibration standards. If the results are not within 20 percent, repeat the calibration.

9.2.3 CVAAS Analysis for Hg. Analyze all samples in duplicate. Analyze a quality control sample to check the accuracy of the calibration standards (if not within 15 percent, repeat calibration). Perform a matrix spike on one sample (if not within 25 percent, analyze all samples by the Method of Standard Additions). Additional information on quality control can be obtained from Method 7470 in EPA Publication SW–846 Third Edition (November 1986) including updates I, II, IIA, IIB and III, as incorporated by reference in § 60.17(i), or in *Standard Methods for Water and Wastewater* Method 303F.

10.0 Calibration and Standardization

Note: Maintain a laboratory log of all calibrations.

10.1 Sampling Train Calibration. Calibrate the sampling train components according to the indicated sections of Method 5: Probe Nozzle (Section 10.1); Pitot Tube (Section 10.2); Metering System (Section 10.3); Probe Heater (Section 10.4); Temperature Sensors (Section 10.5); Leak-Check of the Metering System (Section 8.4.1); and Barometer (Section 10.6).

10.2 Inductively Coupled Argon Plasma Spectrometer Calibration. Prepare standards as outlined in Section 7.5. Profile and calibrate the instrument according to the manufacturer's recommended procedures using those standards. Check the calibration once per hour. If the instrument does not reproduce the standard concentrations within 10 percent, perform the complete calibration procedures. Perform ICP–MS analysis by following Method 6020 in EPA Publication SW–846 Third Edition (November 1986) including updates I, II, IIA, IIB and III, as incorporated by reference in § 60.17(i).

10.3 Atomic Absorption Spectrometer—Direct Aspiration AAS, GFAAS, and CVAAS analyses. Prepare the standards as outlined in Section 7.5 and use them to calibrate the spectrometer. Calibration procedures are also outlined in the EPA methods referred to in Table 29–2 and in Method 7470 in EPA Publication SW–846 Third Edition (November 1986) including updates I, II, IIA, IIB and III, as incorporated by reference in § 60.17(i), or in *Standard Methods for Water and Wastewater* Method 303F (for Hg). Run each standard curve in duplicate and use the mean values to calculate the calibration line. Recalibrate the instrument approximately once every 10 to 12 samples.

11.0 Analytical Procedure

11.1 Sample Analysis. For each sampling train sample run, seven individual analytical samples are generated; two for all desired metals except Hg, and five for Hg. A schematic identifying each sample container and the prescribed analytical preparation and analysis scheme is shown in Figure 29–3. The first two analytical samples, labeled Analytical Fractions 1A and 1B, consist of the digested samples from the front-half of the train. Analytical Fraction 1A is for ICAP, ICP–MS or AAS analysis as described in Sections 11.1.1 and 11.1.2, respectively. Analytical Fraction 1B is for front-half Hg analysis as described in Section 11.1.3. The contents of the back-half of the train are used to prepare the third through seventh analytical samples. The third and fourth analytical samples, labeled Analytical Fractions 2A and 2B, contain the samples from the moisture removal impinger No. 1, if used, and HNO_3/H_2O_2 impingers Nos. 2 and 3. Analytical Fraction 2A is for ICAP, ICP-MS or AAS analysis for target metals, except Hg. Analytical Fraction 2B is for analysis for Hg. The fifth through seventh analytical samples, labeled Analytical Fractions 3A, 3B, and 3C, consist of the impinger contents and rinses from the empty impinger No. 4 and the $H_2SO_4/KMnO_4$ Impingers Nos. 5 and 6. These analytical samples are for analysis for Hg as described in Section 11.1.3. The total back-half Hg catch is determined from the sum of Analytical Fractions 2B, 3A, 3B, and 3C. Analytical Fractions 1A and 2A can be combined proportionally prior to analysis.

11.1.1 ICAP and ICP-MS Analysis. Analyze Analytical Fractions 1A and 2A by ICAP using Method 6010 or Method 200.7 (40 CFR 136, Appendix C). Calibrate the ICAP, and set up an analysis program as described in Method 6010 or Method 200.7. Follow the quality control procedures described in Section 9.2.1. Recommended wavelengths for analysis are as shown in Table 29–2. These wavelengths represent the best combination of specificity and potential detection limit. Other wavelengths may be substituted if they can provide the needed specificity and detection limit, and are treated with the same corrective techniques for

spectral interference. Initially, analyze all samples for the target metals (except Hg) plus Fe and Al. If Fe and Al are present, the sample might have to be diluted so that each of these elements is at a concentration of less than 50 ppm so as to reduce their spectral interferences on As, Cd, Cr, and Pb. Perform ICP-MS analysis by following Method 6020 in EPA Publication SW–846 Third Edition (November 1986) including updates I, II, IIA, IIB and III, as incorporated by reference in § 60.17(i).

Note: When analyzing samples in a HF matrix, an alumina torch should be used; since all front-half samples will contain HF, use an alumina torch.

11.1.2 AAS by Direct Aspiration and/or GFAAS. If analysis of metals in Analytical Fractions 1A and 2A by using GFAAS or direct aspiration AAS is needed, use Table 29–3 to determine which techniques and procedures to apply for each target metal. Use Table 29–3, if necessary, to determine techniques for minimization of interferences. Calibrate the instrument according to Section 10.3 and follow the quality control procedures specified in Section 9.2.2.

11.1.3 CVAAS Hg analysis. Analyze Analytical Fractions 1B, 2B, 3A, 3B, and 3C separately for Hg using CVAAS following the method outlined in Method 7470 in EPA Publication SW–846 Third Edition (November 1986) including updates I, II, IIA, IIB and III, as incorporated by reference in § 60.17(i), or in *Standard Methods for Water and Wastewater Analysis,* 15th Edition, Method 303F, or, optionally using **Note No. 2** at the end of this section. Set up the calibration curve (zero to 1000 ng) as described in Method 7470 or similar to Method 303F using 300-ml BOD bottles instead of Erlenmeyers. Perform the following for each Hg analysis. From each original sample, select and record an aliquot in the size range from 1 ml to 10 ml. If no prior knowledge of the expected amount of Hg in the sample exists, a 5 ml aliquot is suggested for the first dilution to 100 ml (see **Note No. 1** at end of this section). The total amount of Hg in the aliquot shall be less than 1 µg and within the range (zero to 1000 ng) of the calibration curve. Place the sample aliquot into a separate 300-ml BOD bottle, and add enough water to make a total volume of 100 ml. Next add to it sequentially the sample digestion solutions and perform the sample preparation described in the procedures of Method 7470 or Method 303F. (See **Note No. 2** at the end of this section). If the maximum readings are off-scale (because Hg in the aliquot exceeded the calibration range; including the situation where only a 1-ml aliquot of the original sample was digested), then dilute the original sample (or a portion of it) with 0.15 percent HNO_3 (1.5 ml concentrated HNO_3 per liter aqueous solution) so that when a 1- to 10-ml aliquot of the ''0.15 HNO_3 percent dilution of the original sample'' is digested and analyzed by the procedures described above, it will yield an analysis within the range of the calibration curve.

Note No. 1: When Hg levels in the sample fractions are below the in-stack detection limit given in Table 29–1, select a 10 ml aliquot for digestion and analysis as described.

Note No. 2: Optionally, Hg can be analyzed by using the CVAAS analytical procedures given by some instrument manufacturer's directions. These include calibration and quality control procedures for the Leeman Model PS200, the Perkin Elmer FIAS systems, and similar models, if available, of other instrument manufacturers. For digestion and analyses by these instruments, perform the following two steps: (1), Digest the sample aliquot through the addition of the aqueous hydroxylamine hydrochloride/sodium chloride solution the same as described in this section: (*The Leeman, Perkin Elmer, and similar instruments described in this note add automatically the necessary stannous chloride solution during the automated analysis of Hg.)*; (2), Upon completion of the digestion described in (1), analyze the sample according to the instrument manufacturer's directions. This approach allows multiple (including duplicate) automated analyses of a digested sample aliquot.

12.0 Data Analysis and Calculations

12.1 Nomenclature.

A = Analytical detection limit, µg/ml.

B = Liquid volume of digested sample prior to aliquotting for analysis, ml.

C = Stack sample gas volume, dsm^3.

C_{a1} = Concentration of metal in Analytical Fraction 1A as read from the standard curve, µg/ml.

C_{a2} = Concentration of metal in Analytical Fraction 2A as read from the standard curve, (µg/ml).

C_s = Concentration of a metal in the stack gas, mg/dscm.

D = In-stack detection limit, $\mu g/m^3$.

F_a = Aliquot factor, volume of Sample Fraction 2 divided by volume of Sample Fraction 2A (see Section 8.3.4.)

F_d = Dilution factor (F_d = the inverse of the fractional portion of the concentrated sample in the solution actually used in the instrument to produce the reading C_{a1}. For example, if a 2 ml aliquot of Analytical Fraction 1A is diluted to 10 ml to place it in the calibration range, $F_d = 5$).

Hg_{bh} = Total mass of Hg collected in the back-half of the sampling train, µg.

Hg_{bh2} = Total mass of Hg collected in Sample Fraction 2, µg.

$Hg_{bh3(A,B,C)}$ = Total mass of Hg collected separately in Fraction 3A, 3B, or 3C, µg.

Hg_{bhb} = Blank correction value for mass of Hg detected in back-half field reagent blanks, µg.

Hg_{fh} = Total mass of Hg collected in the front-half of the sampling train (Sample Fraction 1), µg.

Hg_{fhb} = Blank correction value for mass of Hg detected in front-half field reagent blank, µg.

Hg_t = Total mass of Hg collected in the sampling train, µg.

M_{bh} = Total mass of each metal (except Hg) collected in the back-half of the sampling train (Sample Fraction 2), µg.

M_{bhb} = Blank correction value for mass of metal detected in back-half field reagent blank, µg.

M_{fh} = Total mass of each metal (except Hg) collected in the front half of the sampling train (Sample Fraction 1), µg.

M_{fhb} = Blank correction value for mass of metal detected in front-half field reagent blank, µg.

M_t = Total mass of each metal (separately stated for each metal) collected in the sampling train, µg.

M_t = Total mass of that metal collected in the sampling train, µg; (substitute Hg_t for M_t for the H_g calculation).

Q_{bh2} = Quantity of Hg, µg, TOTAL in the ALIQUOT of Analytical Fraction 2B selected for digestion and analysis . **NOTE:** For example, if a 10 ml aliquot of Analytical Fraction 2B is taken and digested and analyzed (according to Section 11.1.3 and its **NOTES** Nos. 1 and 2), then calculate and use the total amount of Hg in the 10 ml aliquot for Q_{bh2}.

$Q_{bh3(A,B,C)}$ = Quantity of Hg, µg, *TOTAL, separately, in the ALIQUOT of Analytical Fraction 3A, 3B, or 3C selected for digestion and analysis* (see **NOTES** in Sections 12.7.1 and 12.7.2 describing the quantity ''Q'' and calculate similarly).

Q_{fh} = Quantity of Hg, µg, *TOTAL in the ALIQUOT of Analytical Fraction 1B selected for digestion and analysis*. **NOTE:** For example, if a 10 ml aliquot of Analytical Fraction 1B is taken and digested and analyzed (according to Section 11.1.3 and its **NOTES** Nos. 1 and 2), then calculate and use the total amount of Hg in the 10 ml aliquot for Q_{fh}.

V_a = Total volume of digested sample solution (Analytical Fraction 2A),

ml (see Section 8.3.4.1 or 8.3.4.2, as applicable).

V_{f1B} = Volume of aliquot of Analytical Fraction 1B analyzed, ml. **NOTE:** For example, if a 1 ml aliquot of Analytical Fraction 1B was diluted to 50 ml with 0.15 percent HNO_3 as described in Section 11.1.3 to bring it into the proper analytical range, and then 1 ml of that 50-ml was digested according to Section 11.1.3 and analyzed, V_{f1B} would be 0.02 ml.

V_{f2B} = Volume of Analytical Fraction 2B analyzed, ml. **NOTE:** For example, if 1 ml of Analytical Fraction 2B was diluted to 10 ml with 0.15 percent HNO_3 as described in Section 11.1.3 to bring it into the proper analytical range, and then 5 ml of that 10 ml was analyzed, V_{f2B} would be 0.5 ml.

$V_{f3(A,B,C)}$ = Volume, separately, of Analytical Fraction 3A, 3B, or 3C analyzed, ml (see previous notes in Sections 12.7.1 and 12.7.2, describing the quantity ''V'' and calculate similarly).

$V_{m(std)}$ = Volume of gas sample as measured by the dry gas meter, corrected to dry standard conditions, dscm.

$V_{soln,1}$ = Total volume of digested sample solution (Analytical Fraction 1), ml.

$V_{soln,1}$ = Total volume of Analytical Fraction 1, ml.

$V_{soln,2}$ = Total volume of Sample Fraction 2, ml.

$V_{soln,3(A,B,C)}$ = Total volume, separately, of Analytical Fraction 3A, 3B, or 3C, ml.

$K_4 = 10^{-3}$ mg/µg.

12.2 Dry Gas Volume. Using the data from this test, calculate $V_{m(std)}$, the dry gas sample volume at standard conditions as outlined in Section 12.3 of Method 5.

12.3 Volume of Water Vapor and Moisture Content. Using the total volume of condensate collected during the source sampling, calculate the volume of water vapor $V_{w(std)}$ and the moisture content B_{ws} of the stack gas. Use Equations 5–2 and 5–3 of Method 5.

12.4 Stack Gas Velocity. Using the data from this test and Equation 2–9 of Method 2, calculate the average stack gas velocity.

12.5 In-Stack Detection Limits. Calculate the in-stack method detection limits shown in Table 29–4 using the conditions described in Section 13.3.1 as follows:

$$A \times \frac{B}{C} = D \qquad \text{Eq. 29-1}$$

12.6 Metals (Except Hg) in Source Sample.

12.6.1 Analytical Fraction 1A, Front-Half, Metals (except Hg). Calculate separately the amount of each metal collected in Sample Fraction 1 of the sampling train using the following equation:

$$M_{fh} = C_{al} F_d V_{soln,1} \qquad \text{Eq. 29-2}$$

Note: If Analytical Fractions 1A and 2A are combined, use proportional aliquots. Then make appropriate changes in Equations 29–2 through 29–4 to reflect this approach.

12.6.2 Analytical Fraction 2A, Back-Half, Metals (except Hg). Calculate separately the amount of each metal collected in Fraction 2 of the sampling train using the following equation:

$$M_{bh} = C_{a2} F_a V_a \qquad \text{Eq. 29-3}$$

12.6.3 Total Train, Metals (except Hg). Calculate the total amount of each of the quantified metals collected in the sampling train as follows:

$$M_t = \left(M_{fh} - M_{fhb}\right) + \left(M_{bh} - M_{bhb}\right) \qquad \text{Eq. 29-4}$$

Note: If the measured blank value for the front half (M_{fhb}) is in the range 0.0 to ''A'' µg (where ''A'' µg equals the value determined by multiplying 1.4 µg/in.^{2} times the actual area in in.^{2} of the sample filter), use M_{fhb} to correct the emission sample value (M_{fh}); if M_{fhb} exceeds ''A'' µg, use the greater of I or II:

I. ''A'' µg.

II. The lesser of (a) M_{fhb}, or (b) 5 percent of M_{fh}. If the measured blank value for the back-half (M_{bhb}) is in the range 0.0 to 1 µg, use M_{bhb} to correct the emission sample value (M_{bh}); if M_{bhb} exceeds 1 µg, use the greater of I or II:

I. 1 µg.

II. The lesser of (a) M_{bhb}, or (b) 5 percent of M_{bh}.

12.7 Hg in Source Sample.

12.7.1 Analytical Fraction 1B; Front-Half Hg. Calculate the amount ofHg collected in the front-half, Sample Fraction 1, of the sampling train by using Equation 29–5:

$$Hg_{fh} = \frac{Q_{fh}}{V_{flB}}\left(V_{soln,1}\right) \qquad \text{Eq. 29-5}$$

12.7.2 Analytical Fractions 2B, 3A, 3B, and 3C; Back Half Hg.

12.7.2.1 Calculate the amount of Hg collected in Sample Fraction 2 by using Equation 29–6:

$$Hg_{bh2} = \frac{Q_{bh2}}{V_{f2B}}\left(V_{soln,2}\right) \qquad \text{Eq. 29-6}$$

12.7.2.2 Calculate each of the back-half Hg values for Analytical Fractions 3A, 3B, and 3C by using Equation 29–7:

$$Hg_{bh3(A,B,C)} = \frac{Q_{bh3(A,B,C)}}{V_{f3(A,B,C)}}\left(V_{soln,3(A,B,C)}\right) \qquad \text{Eq. 29-7}$$

12.7.2.3 Calculate the total amount of Hg collected in the back-half of the sampling train by using Equation 29–8:

$$Hg_{bh} = Hg_{bh2} + Hg_{bh3A} + Hg_{bh3B} + Hg_{bh3C} \qquad \text{Eq. 29-8}$$

12.7.3 Total Train Hg Catch. Calculate the total amount of Hg collected in the sampling train by using Equation 29–9:

$$Hg_t = (Hg_{fh} - Hg_{fhb}) + (Hg_{bh} - Hg_{bhb}) \qquad \text{Eq. 29-9}$$

Note: If the total of the measured blank values ($Hg_{fhb} + Hg_{bhb}$) is in the range of 0.0 to 0.6 µg, then use the total to correct the sample value ($Hg_{fh} + Hg_{bh}$); if it exceeds 0.6 µg, use the greater of I. or II:

I. 0.6 µg.

II. The lesser of (a) ($Hg_{fhb} + Hg_{bhb}$), or (b) 5 percent of the sample value ($Hg_{fh} + Hg_{bh}$).

12.8 Individual Metal Concentrations in Stack Gas. Calculate the concentration of each metal in the stack gas (dry basis, adjusted to standard conditions) by using Equation 29–10:

$$C_s = \frac{K_4 M_t}{V_{m(std)}} \qquad \text{Eq. 29-10}$$

12.9 Isokinetic Variation and Acceptable Results. Same as Method 5, Sections 12.11 and 12.12, respectively.

13.0 Method Performance

13.1 Range. For the analysis described and for similar analyses, the ICAP response is linear over several orders of magnitude. Samples containing metal concentrations in the nanograms per ml (ng/ml) to micrograms per ml (µg/ml) range in the final analytical solution can be analyzed using this method. Samples containing greater than approximately 50 µg/ml As, Cr, or Pb should be diluted to that level or lower for final analysis. Samples containing greater than approximately 20 µg/ml of Cd should be diluted to that level before analysis.

13.2 Analytical Detection Limits.

Note: See Section 13.3 for the description of in-stack detection limits.

13.2.1 ICAP analytical detection limits for the sample solutions (based on *SW–846,* Method 6010) are approximately as follows: Sb (32 ng/ml), As (53 ng/ml), Ba (2 ng/ml), Be (0.3 ng/ml), Cd (4 ng/ml), Cr (7 ng/ml), Co (7 ng/ml), Cu (6 ng/ml), Pb (42 ng/ml), Mn (2 ng/ml), Ni (15 ng/ml), P (75 ng/ml), Se (75 ng/ml), Ag (7 ng/ml), Tl (40 ng/ml), and Zn (2 ng/ml). ICP-MS analytical detection limits (based on *SW–846,* Method 6020) are lower generally by a factor of ten or more. Be is lower by a factor of three. The actual sample analytical detection limits are sample dependent and may vary due to the sample matrix.

13.2.2 The analytical detection limits for analysis by direct aspiration AAS (based on *SW–846*, Method 7000 series) are approximately as follows: Sb (200 ng/ml), As (2 ng/ml), Ba (100 ng/ml), Be (5 ng/ml), Cd (5 ng/ml), Cr (50 ng/ml), Co (50 ng/ml), Cu (20 ng/ml), Pb (100 ng/ml), Mn (10 ng/ml), Ni (40 ng/ml), Se (2 ng/ml), Ag (10 ng/ml), Tl (100 ng/ml), and Zn (5 ng/ml).

13.2.3 The detection limit for Hg by CVAAS (on the resultant volume of the *digestion* of the aliquots taken for Hg analyses) can be approximately 0.02 to 0.2 ng/ml, depending upon the type of CVAAS analytical instrument used.

13.2.4 The use of GFAAS can enhance the detection limits compared to direct aspiration AAS as follows: Sb (3 ng/ml), As (1 ng/ml), Be (0.2 ng/ml), Cd (0.1 ng/ml), Cr (1 ng/ml), Co (1 ng/ml), Pb (1 ng/ml), Se (2 ng/ml), and Tl (1 ng/ml).

13.3 In-stack Detection Limits.

13.3.1 For test planning purposes in-stack detection limits can be developed by using the following information: (1) The procedures described in this method, (2) the analytical detection limits described in Section 13.2 and in *SW–846,*(3) the normal volumes of 300 ml (Analytical Fraction 1) for the front-half and 150 ml (Analytical Fraction 2A) for the back-half samples, and (4) a stack gas sample volume of 1.25 m^3. The resultant in-stack method detection limits for the above set of conditions are presented in Table 29–1 and were calculated by using Eq. 29–1 shown in Section 12.5.

13.3.2 To ensure optimum precision/resolution in the analyses, the target concentrations of metals in the analytical solutions should be at least ten times their respective analytical detection limits. Under certain conditions, and with greater care in the analytical procedure, these concentrations can be as low as approximately three times the respective analytical detection limits without seriously impairing the precision of the analyses. On at least one sample run in the source test, and for each metal analyzed, perform either repetitive analyses, Method of Standard Additions, serial dilution, or matrix spike addition, etc., to document the quality of the data.

13.3.3 Actual in-stack method detection limits are based on actual source sampling parameters and analytical results as described above. If required, the method in-stack detection limits can be improved over those shown in Table 29–1 for a specific test by either increasing the sampled stack gas volume, reducing the total volume of the digested samples, improving the analytical detection limits, or any combination of the three. For extremely low levels of *Hg only,* the aliquot size selected for digestion and analysis can be increased to as much as 10 ml, thus improving the in-stack detection limit by a factor of ten compared to a 1 ml aliquot size.

13.3.3.1 A nominal one hour sampling run will collect a stack gas sampling volume of about 1.25 m^3. If the sampling time is increased to four hours and 5 m^3 are collected, the in-stack method detection limits would be improved by a factor of four compared to the values shown in Table 29–1.

13.3.3.2 The in-stack detection limits assume that all of the sample is digested and the final liquid volumes for analysis are the normal values of 300 ml for Analytical Fraction 1, and 150 ml for Analytical Fraction 2A. If the volume of Analytical Fraction 1 is reduced from 300 to 30 ml, the in-stack detection limits for that fraction of the sample would be improved by a factor of ten. If the volume of Analytical Fraction 2A is reduced from 150 to 25 ml, the in-stack detection limits for that fraction of the sample would be improved by a factor of six. Matrix effect checks are necessary on sample analyses and typically are of much greater significance for samples that have been concentrated to less than the normal original sample volume. Reduction of Analytical Fractions 1 and 2A to volumes of less than 30 and 25 ml, respectively, could interfere with the redissolving of the residue and could increase interference by other compounds to an intolerable level.

13.3.3.3 When both of the modifications described in Sections 13.3.3.1 and 13.3.3.2 are used simultaneously on one sample, the resultant improvements are multiplicative. For example, an increase in stack gas volume by a factor of four and a reduction in the total liquid sample digested volume of both Analytical Fractions 1 and 2A by a factor of six would result in an improvement by a factor of twenty-four of the in-stack method detection limit.

13.4 Precision. The precision (relative standard deviation) for each metal detected in a method development test performed at a sewage sludge incinerator were found to be as follows:

Sb (12.7 percent), As (13.5 percent), Ba (20.6 percent), Cd (11.5 percent), Cr (11.2 percent), Cu (11.5 percent), Pb (11.6 percent), P (14.6 percent), Se (15.3 percent), Tl (12.3 percent), and Zn (11.8 percent). The precision for Ni was 7.7 percent for another test conducted at a source simulator. Be, Mn, and Ag were not detected in the tests. However,

based on the analytical detection limits of the ICAP for these metals, their precisions could be similar to those for the other metals when detected at similar levels.

14.0 Pollution Prevention [Reserved]

15.0 Waste Management [Reserved]

16.0 References

1. Method 303F in *Standard Methods for the Examination of Water Wastewater,* 15th Edition, 1980. Available from the American Public Health Association, 1015 18th Street N.W., Washington, D.C. 20036.

2. EPA Methods 6010, 6020, 7000, 7041, 7060, 7131, 7421, 7470, 7740, and 7841, *Test Methods for Evaluating Solid Waste: Physical/Chemical Methods.* SW–846, Third Edition, November 1986, with updates I, II, IIA, IIB and III. Office of Solid Waste and Emergency Response, U. S. Environmental Protection Agency, Washington, D.C. 20460.

3. EPA Method 200.7, *Code of Federal Regulations,* Title 40, Part 136, Appendix C. July 1, 1987.

4. EPA Methods 1 through 5, *Code of Federal Regulations,* Title 40, Part 60, Appendix A, July 1, 1991.

5. EPA Method 101A, *Code of Federal Regulations,* Title 40, Part 61, Appendix B, July 1, 1991.

17.0 Tables, Diagrams, Flowcharts, and Validation Data

TABLE 29–1.—IN STACK METHOD DETECTION LIMITS (UG/M^3) FOR THE FRONT-HALF, THE BACK HALF, AND THE TOTAL SAMPLING TRAIN USING ICAP, GFAAS, AND CVAAS

Metal	Front-half: probe and filter	Back-half: impinters 1–3	Back-half: impringers 4–6 [a]	Total train
Antimony	[1] 7.7 (0.7)	[1] 3.8 (0.4)	.....	[1] 11.5 (1.1)
Arsenic	[1] 12.7 (0.3)	[1] 6.4 (0.1)	.....	[1] 19.1 (0.4)
Barium	0.5	0.3	.....	0.8
Beryllium	[1] 0.07 (0.05)	[1] 0.04 (0.03)	.....	[1] 0.11 (0.08)
Cadmium	[1] 1.0 (0.02)	[1] 0.5 (0.01)	.....	[1] 1.5 (0.03)
Chromium	[1] 1.7 (0.2)	[1] 0.8 (0.1)	.....	[1] 2.5 (0.3)
Cobalt	[1] 1.7 (0.2)	[1] 0.8 (0.1)	.....	[1] 2.5 (0.3)
Copper	1.4	0.7	.....	2.1
Lead	[1] 10.1 (0.2)	[1] 5.0 (0.1)	.....	[1] 15.1 (0.3)
Manganese	[1] 0.5 (0.2)	[1] 0.2 (0.1)	.....	[1] 0.7 (0.3)
Mercury	[2] 0.06	[2] 0.3	[2] 0.2	[2] 0.56
Nickel	3.6	1.8	.....	5.4
Phosphorus	18	9	.....	27
Selenium	[1] 18 (0.5)	[1] 9 (0.3)	.....	[1] 27 (0.8)
Silver	1.7	0.9 (0.7)	.....	2.6
Thallium	[1] 9.6 (0.2)	[1] 4.8 (0.1)	.....	[1] 14.4 (0.3)
Zinc	0.5	0.3	.....	0.8

[a] Mercury analysis only.
[1] Detection limit when analyzed by ICAP or GFAAS as shown in parentheses (see Section 11.1.2).
[2] Detection limit when anaylzed by CVAAS, estimated for Back-half and Total Train. See Sections 13.2 and 11.1.3. Note: Actual method in-stack detection limits may vary from these values, as described in Section 13.3.3.

TABLE 29–2.—RECOMMENDED WAVELENGTHS FOR ICAP ANALYSIS

Analyte	Wavelength (nm)
Aluminum (Al)	308.215
Antimony (Sb)	206.833
Arsenic (As)	193.696
Barium (Ba)	455.403
Beryllium (Be)	313.042
Cadmium (Cd)	226.502
Chromium (Cr)	267.716

TABLE 29–2.—RECOMMENDED WAVELENGTHS FOR ICAP ANALYSIS—Continued

Analyte	Wavelength (nm)
Cobalt (Co)	228.616
Copper (Cu)	328.754
Iron (Fe)	259.940
Lead (Pb)	220.353
Manganese (Mn)	257.610
Nickel (Ni)	231.604

TABLE 29–2.—RECOMMENDED WAVELENGTHS FOR ICAP ANALYSIS—Continued

Analyte	Wavelength (nm)
Phosphorus (P)	214.914
Selenium (Se)	196.026
Silver (Ag)	328.068
Thallium (T_1)	190,864
Zinc (Zn)	213,856

TABLE 29–3.—APPLICABLE TECHNIQUES, METHODS AND MINIMIZATION OF INTERFERENCES FOR AAS ANALYSIS

Metal	Technique	SW–846 [1] Methods No.	Wavelength (nm)	Interferences	
				Cause	Minimization
Fe	Aspiration	7380	248.3	Contamination	Great care taken to avoid contamination.
Pb	Aspiration	7420	283.3	217.0 nm alternate	Background correction required.
Pb	Furnace	7421	283.3	Poor recoveries	Matrix modifier, add 10 µl of phosphorus acid to 1 ml of prepared sample in sampler cup.
Mn	Aspiration	7460	279.5	403.1 nm alternate	Background correction required.
Ni	Aspiration	7520	232.0	352.4 nm alternate Fe, Co, and Cr.	Background correction required. Matrix matching or nitrous-oxide/acetylene flame
				Nonlinear response	Sample dilution or use 352.3 nm line

TABLE 29–3.—APPLICABLE TECHNIQUES, METHODS AND MINIMIZATION OF INTERFERENCES FOR AAS ANALYSIS—Continued

Metal	Technique	SW–846 [1] Methods No.	Wavelength (nm)	Interferences	
				Cause	Minimization
Se	Furnace	7740	196.0	Volatility	Spike samples and reference materials and add nickel nitrate to minimize volatilization.
				Adsorption & scatter	Background correction is required and Zeeman background correction can be useful.
Ag	Aspiration	7760	328.1	Adsorption & scatter AgCl insoluble.	Background correction is required. Avoid hydrochloric acid unless silver is in solution as a chloride complex. Sample and standards monitored for aspiration rate.
Tl	Aspiration	7840	276.8		Background correction is required. Hydrochloric acid should not be used.
Tl	Furnace	7841	276.8	Hydrochloric acid or chloride	Background correction is required. Verify that losses are not occurring for volatilization by spiked samples or standard addition; Palladium is a suitable matrix modifier. 4
Zn	Aspiration	7950	213.9	High Si, Cu, & P Contamination	Strontium removes Cu and phosphate. Great care taken to avoid contamination.
Sb	Aspiration	7040	217.6	1000 mg/ml Pb, Ni, Cu, or acid	Use secondary wavelength of 231.1 nm; match sample & standards acid concentration or use nitrous oxide/acetylene flame.
Sb	Furnace	7041	217.6	High Pb	Secondary wavelength or Zeeman correction.
As	Furnace	7060	193.7	Arsenic Volatilization Aluminum	Spike samples and add nickel nitrate solution to digestates prior to analysis. Use Zeeman background correction.
Ba	Aspiration	7080	553.6	Calcium.	
				Barium Ionization	High hollow cathode current and narrow band set. 2 ml of KCl per 100 m1 of sample.
Be	Aspiration	7090	234.9	500 ppm Al. High Mg and Si	Add 0.1% fluoride.
Be	Furnace	7091	234.9	Be in optical path	Optimize parameters to minimize effects.
Cd	Aspiration	7130	228.8	Absorption and light scattering	Background correction is required.
Cd	Furnace	7131	228.8	As above	As above.
				Excess Chloride	Ammonium phosphate used as a matrix modifier.
				Pipet Tips	Use cadmium-free tips.
Cr	Aspiration	7190	357.9	Alkali metal	KCl ionization suppressant in samples and standards—Consult mfgs' literature.
Co	Furnace	7201	240.7	Excess chloride	Use Method of Standard Additions.
Cr	Furnace	7191	357.9	200 mg/L Ca and P	All calcium nitrate for a know constant effect and to eliminate effect of phosphate.
Cu	Aspiration	7210	324.7	Absorption and Scatter	Consult manufacturer's manual.

[1] Refer to EPA publication SW–846 (Reference 2 in Section 16.0).

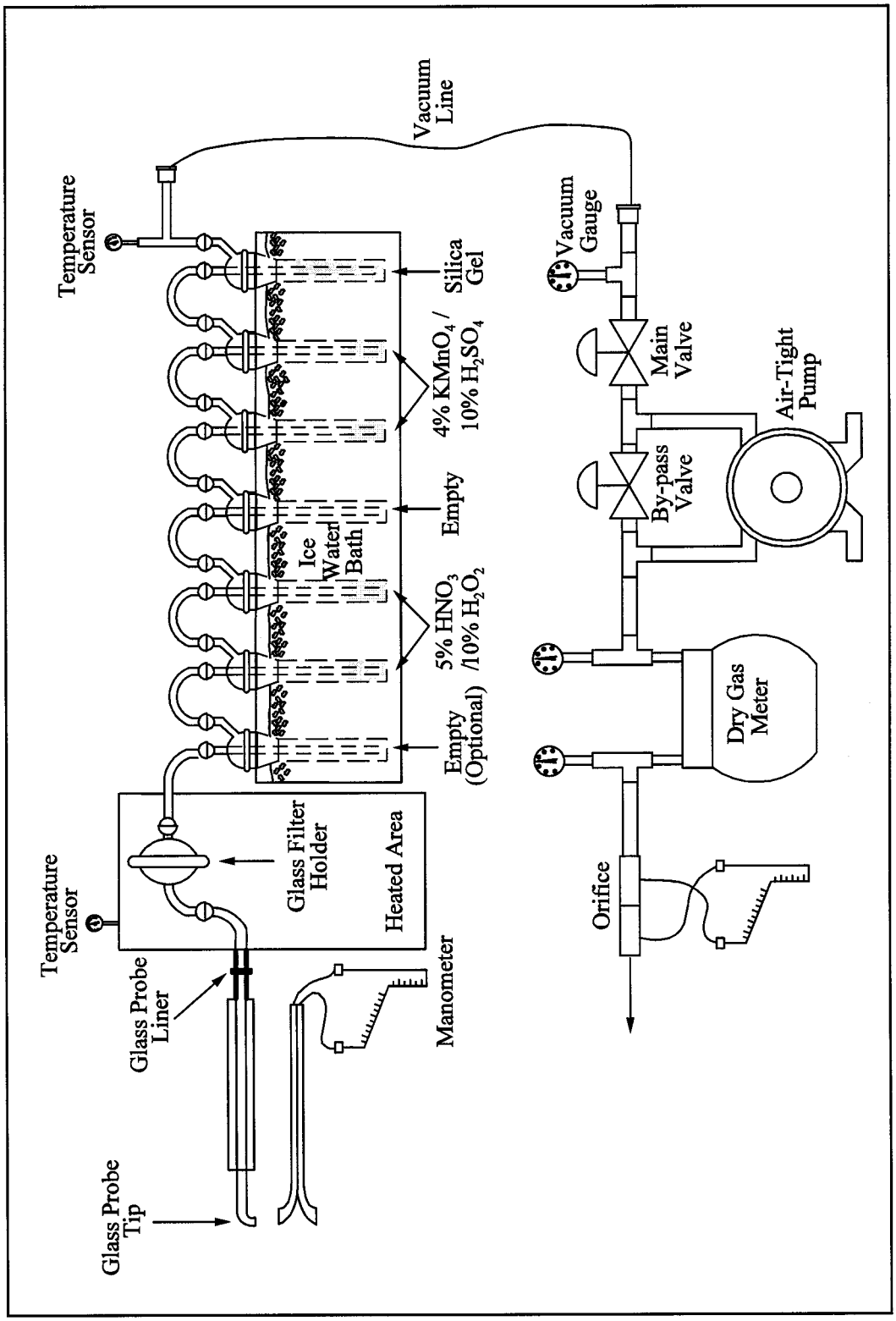

Figure 29-1. Sampling Train.

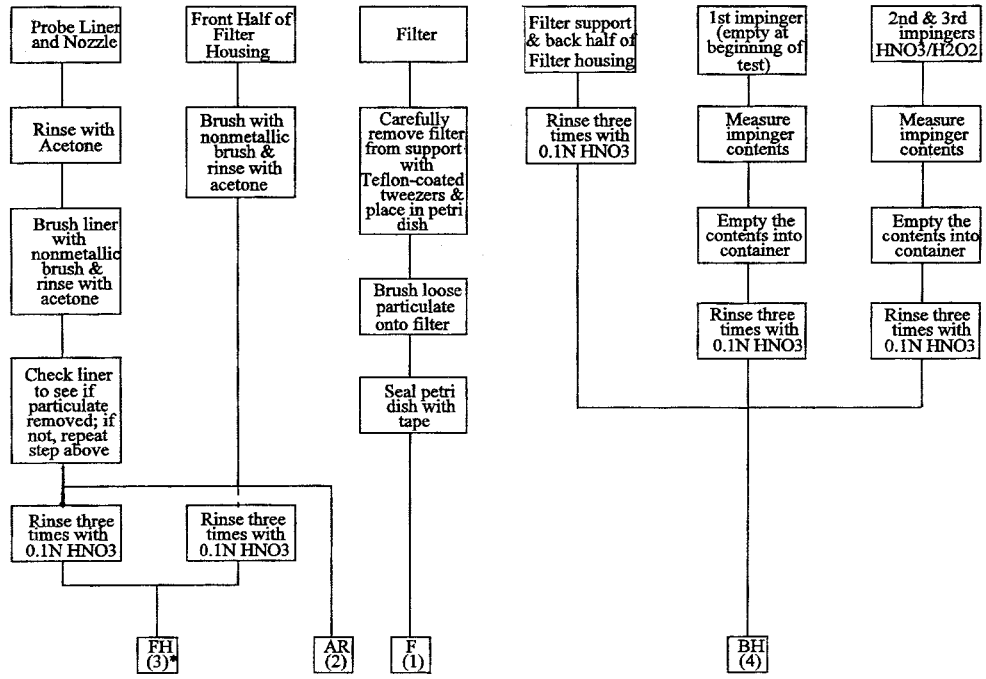

* Number in parentheses indicated container number

Figure 29-2a. Sample Recovery Scheme.

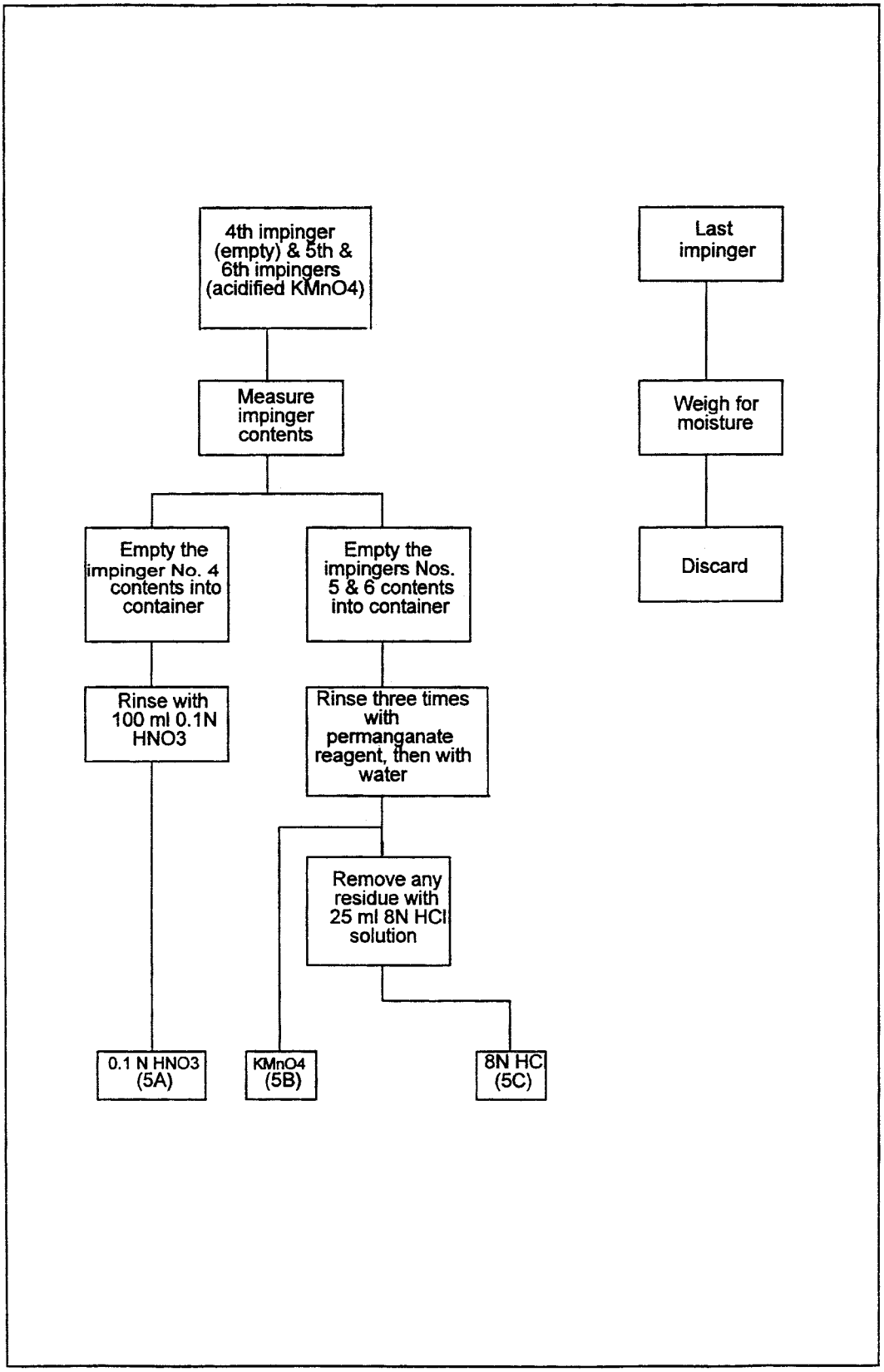

Figure 29-2b. Sample Recovery Scheme.

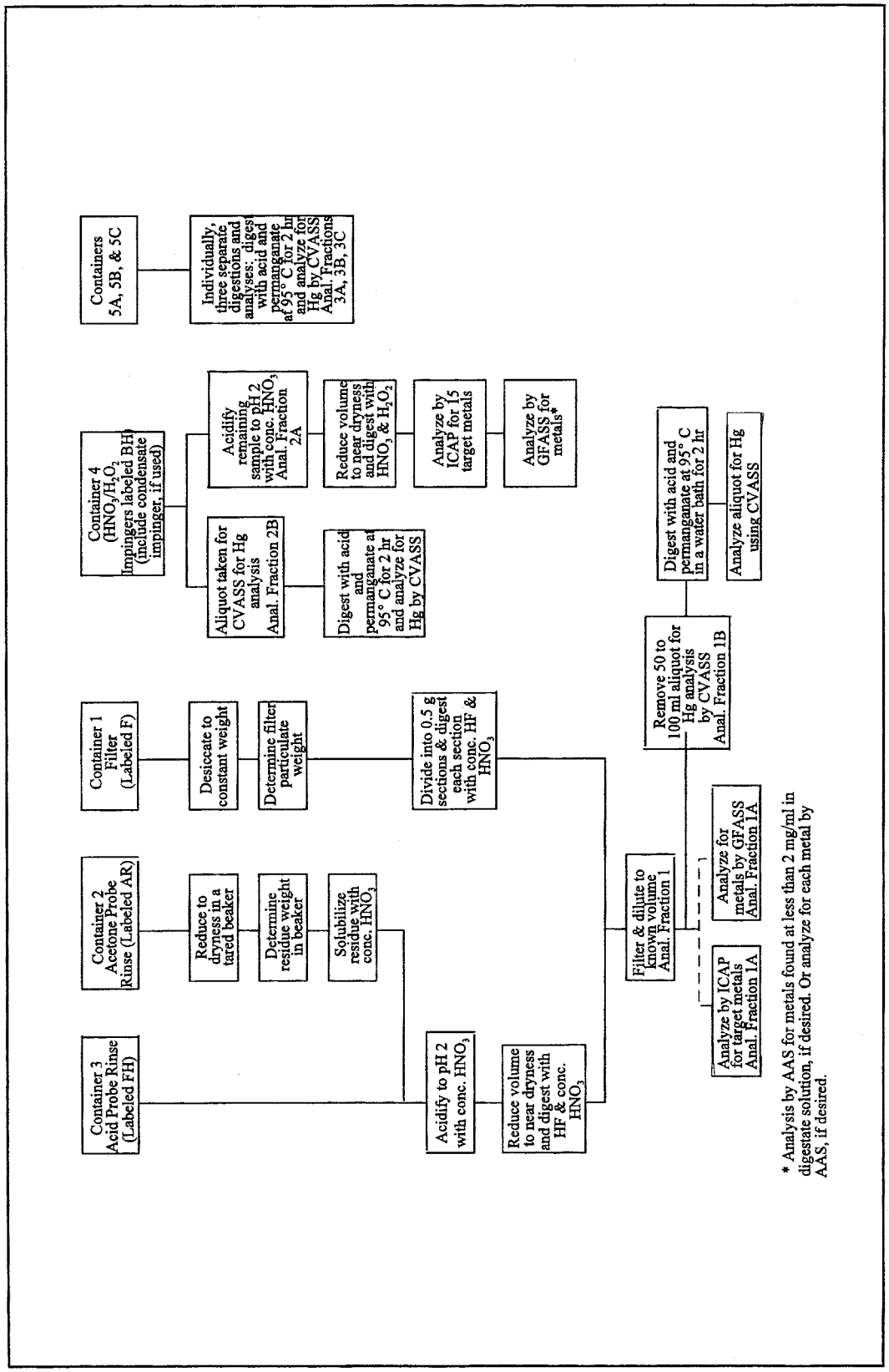

Figure 29-3. Sample Preparation and Analysis Scheme.

BILLING CODE 6560–50–C

217. In Part 60, Appendix B is amended by revising Performance Specifications 2, 3, 4, 4A, 5, 6, 7, 8, and 9 to read as follows:

Performance Specification 2—Specifications and Test Procedures for SO_2 and NO_X Continuous Emission Monitoring Systems in Stationary Sources

1.0 Scope and Application

1.1 Analytes

Analyte	CAS Nos.
Sulfur Dioxide (SO_2)	7449–09–5
Nitrogen Oxides (NO_x)	10102–44–0 (NO_2), 10024–97–2 (NO)

1.2 Applicability.

1.2.1 This specification is for evaluating the acceptability of SO_2 and NO_X continuous emission monitoring systems (CEMS) at the time of installation or soon after and whenever specified in the regulations. The CEMS may include, for certain stationary sources, a diluent (O_2 or CO_2) monitor.

1.2.2 This specification is not designed to evaluate the installed CEMS performance over an extended period of time nor does it identify specific calibration techniques and other auxiliary procedures to assess the CEMS performance. The source owner or operator is responsible to calibrate, maintain, and operate the CEMS properly. The Administrator may require, under Section 114 of the Act, the operator to conduct CEMS performance evaluations at other times besides the initial test to evaluate the CEMS performance. See 40 CFR Part 60, § 60.13(c).

2.0 Summary of Performance Specification

Procedures for measuring CEMS relative accuracy and calibration drift are outlined. CEMS installation and measurement location specifications, equipment specifications, performance specifications, and data reduction procedures are included. Conformance of the CEMS with the Performance Specification is determined.

3.0 Definitions

3.1 *Calibration Drift (CD)* means the difference in the CEMS output readings from the established reference value after a stated period of operation during which no unscheduled maintenance, repair, or adjustment took place.

3.2 *Centroidal Area* means a concentric area that is geometrically similar to the stack or duct cross section and is no greater than l percent of the stack or duct cross-sectional area.

3.3 *Continuous Emission Monitoring System* means the total equipment required for the determination of a gas concentration or emission rate. The sample interface, pollutant analyzer, diluent analyzer, and data recorder are the major subsystems of the CEMS.

3.4 *Data Recorder* means that portion of the CEMS that provides a permanent record of the analyzer output. The data recorder may include automatic data reduction capabilities.

3.5 *Diluent Analyzer* means that portion of the CEMS that senses the diluent gas (*i.e.*, CO_2 or O_2) and generates an output proportional to the gas concentration.

3.6 *Path CEMS* means a CEMS that measures the gas concentration along a path greater than 10 percent of the equivalent diameter of the stack or duct cross section.

3.7 *Point CEMS* means a CEMS that measures the gas concentration either at a single point or along a path equal to or less than 10 percent of the equivalent diameter of the stack or duct cross section.

3.8 *Pollutant Analyzer* means that portion of the CEMS that senses the pollutant gas and generates an output proportional to the gas concentration.

3.9 *Relative Accuracy (RA)* means the absolute mean difference between the gas concentration or emission rate determined by the CEMS and the value determined by the reference method (RM), plus the 2.5 percent error confidence coefficient of a series of tests, divided by the mean of the RM tests or the applicable emission limit.

3.10 *Sample Interface* means that portion of the CEMS used for one or more of the following: sample acquisition, sample delivery, sample conditioning, or protection of the monitor from the effects of the stack effluent.

3.11 *Span Value* means the concentration specified for the affected source category in an applicable subpart of the regulations that is used to set the calibration gas concentration and in determining calibration drift.

4.0 Interferences. [Reserved]

5.0 Safety

The procedures required under this performance specification may involve hazardous materials, operations, and equipment. This performance specification may not address all of the safety problems associated with these procedures. It is the responsibility of the user to establish appropriate safety and health practices and determine the applicable regulatory limitations prior to performing these procedures. The CEMS user's manual and materials recommended by the reference method should be consulted for specific precautions to be taken.

6.0 Equipment and Supplies

6.1 CEMS Equipment Specifications.

6.1.1 Data Recorder Scale. The CEMS data recorder output range must include zero and a high-level value. The high-level value is chosen by the source owner or operator and is defined as follows:

6.1.1.1 For a CEMS intended to measure an uncontrolled emission (*e.g.,* SO_2 measurements at the inlet of a flue gas desulfurization unit), the high-level value should be between 1.25 and 2 times the maximum potential emission level over the appropriate averaging time, unless otherwise specified in an applicable subpart of the regulations.

6.1.1.2 For a CEMS installed to measure controlled emissions or emissions that are in compliance with an applicable regulation, the high-level value between 1.5 times the pollutant concentration corresponding to the emission standard level and the span value given in the applicable regulations is adequate.

6.1.1.3 Alternative high-level values may be used, provided the source can measure emissions which exceed the full-scale limit in accordance with the requirements of applicable regulations.

6.1.1.4 If an analog data recorder is used, the data recorder output must be established so that the high-level value would read between 90 and 100 percent of the data recorder full scale. (This scale requirement may not be applicable to digital data recorders.) The zero and high level calibration gas, optical filter, or cell values should be used to establish the data recorder scale.

6.1.2 The CEMS design should also allow the determination of calibration drift at the zero and high-level values. If this is not possible or practical, the design must allow these determinations to be conducted at a low-level value (zero to 20 percent of the high-level value) and at a value between 50 and 100 percent of the high-level value. In special cases, the Administrator may approve a single-point calibration-drift determination.

6.2 Other equipment and supplies, as needed by the applicable reference method(s) (see Section 8.4.2 of this Performance Specification), may be required.

7.0 Reagents and Standards

7.1 Reference Gases, Gas Cells, or Optical Filters. As specified by the CEMS manufacturer for calibration of the CEMS (these need not be certified).

7.2 Reagents and Standards. May be required as needed by the applicable reference method(s) (see Section 8.4.2 of this Performance Specification).

8.0 Performance Specification Test Procedure

8.1 Installation and Measurement Location Specifications.

8.1.1 CEMS Installation. Install the CEMS at an accessible location where the pollutant concentration or emission rate measurements are directly representative or can be corrected so as to be representative of the total emissions from the affected facility or at the measurement location cross section. Then select representative measurement points or paths for monitoring in locations that the CEMS will pass the RA test (see Section 8.4). If the cause of failure to meet the RA test is determined to be the measurement location and a satisfactory correction technique cannot be established, the Administrator may require the CEMS to be relocated. Suggested measurement locations and points or paths that are most likely to provide data that will meet the RA requirements are listed below.

8.1.2 CEMS Measurement Location. It is suggested that the measurement location be (1) at least two equivalent diameters downstream from the nearest control device, the point of pollutant generation, or other point at which a change in the pollutant concentration or emission rate may occur and (2) at least a half equivalent diameter upstream from the effluent exhaust or control device.

8.1.2.1 Point CEMS. It is suggested that the measurement point be (1) no less than 1.0 meter (3.3 ft) from the stack or duct wall or (2) within or centrally located over the centroidal area of the stack or duct cross section.

8.1.2.2 Path CEMS. It is suggested that the effective measurement path (1) be totally within the inner area bounded by a line 1.0 meter (3.3 ft) from the stack or duct wall, or (2) have at least 70 percent of the path within the inner 50 percent of the stack or duct cross-sectional area, or (3) be centrally located over any part of the centroidal area.

8.1.3 Reference Method Measurement Location and Traverse Points.

8.1.3.1 Select, as appropriate, an accessible RM measurement point at least two equivalent diameters downstream from the nearest control device, the point of pollutant generation, or other point at which a change in the pollutant concentration or emission rate may occur, and at least a half equivalent diameter upstream from the effluent exhaust or control device. When pollutant concentration changes are due solely to diluent leakage (*e.g.,* air heater leakages) and pollutants and diluents are simultaneously measured at the same location, a half diameter may be used in lieu of two equivalent diameters. The CEMS and RM locations need not be the same.

8.1.3.2 Select traverse points that assure acquisition of representative samples over the stack or duct cross section. The minimum requirements are as follows: Establish a ''measurement line'' that passes through the centroidal area and in the direction of any expected stratification. If this line interferes with the CEMS measurements, displace the line up to 30 cm (12 in.) (or 5 percent of the equivalent diameter of the cross section, whichever is less) from the centroidal area. Locate three traverse points at 16.7, 50.0, and 83.3 percent of the measurement line. If the measurement line is longer than 2.4 meters (7.8 ft) and pollutant stratification is not expected, the three traverse points may be located on the line at 0.4, 1.2, and 2.0 meters from the stack or duct wall. This option must not be used after wet scrubbers or at points where two streams with different pollutant concentrations are combined. If stratification is suspected, the following procedure is suggested. For rectangular ducts, locate at least nine sample points in the cross section such that sample points are the centroids of similarly-shaped, equal area divisions of the cross section. Measure the pollutant concentration, and, if applicable, the diluent concentration at each point using appropriate reference methods or other appropriate instrument methods that give responses relative to pollutant concentrations. Then calculate the mean value for all sample points. For circular ducts, conduct a 12-point traverse (*i.e.,* six points on each of the two perpendicular diameters) locating the sample points as described in 40 CFR 60, Appendix A, Method 1. Perform the measurements and calculations as described above. Determine if the mean pollutant concentration is more than 10% different from any single point. If so, the cross section is considered to be stratified, and the tester may not use the alternative traverse point locations (...0.4, 1.2, and 2.0 meters from the stack or duct wall.) but must use the three traverse points at 16.7, 50.0, and 83.3 percent of the entire measurement line. Other traverse points may be selected, provided that they can be shown to the satisfaction of the Administrator to provide a representative sample over the stack or duct cross section. Conduct all necessary RM tests within 3 cm (1.2 in.) of the traverse points, but no closer than 3 cm (1.2 in.) to the stack or duct wall.

8.2 Pretest Preparation. Install the CEMS, prepare the RM test site according to the specifications in Section 8.1, and prepare the CEMS for operation according to the manufacturer's written instructions.

8.3 Calibration Drift Test Procedure.

8.3.1 CD Test Period. While the affected facility is operating at more than 50 percent of normal load, or as specified in an applicable subpart, determine the magnitude of the CD once each day (at 24-hour intervals) for 7 consecutive days according to the procedure given in Sections 8.3.2 through 8.3.4.

8.3.2 The purpose of the CD measurement is to verify the ability of the CEMS to conform to the established CEMS calibration used for determining the emission concentration or emission rate. Therefore, if periodic automatic or manual adjustments are made to the CEMS zero and calibration settings, conduct the CD test immediately before these adjustments, or conduct it in such a way that the CD can be determined.

8.3.3 Conduct the CD test at the two points specified in Section 6.1.2. Introduce to the CEMS the reference gases, gas cells, or optical filters (these need not be certified). Record the CEMS response and subtract this value from the reference value (see example data sheet in Figure 2–1).

8.4 Relative Accuracy Test Procedure.

8.4.1 RA Test Period. Conduct the RA test according to the procedure given in Sections 8.4.2 through 8.4.6 while the affected facility is operating at more than 50 percent of normal load, or as specified in an applicable subpart. The RA test may be conducted during the CD test period.

8.4.2 Reference Methods. Unless otherwise specified in an applicable subpart of the regulations, Methods 3B, 4, 6, and 7, or their approved alternatives, are the reference methods for diluent (O_2 and CO_2), moisture, SO_2, and NO_x, respectively.

8.4.3 Sampling Strategy for RM Tests. Conduct the RM tests in such a way that they will yield results representative of the emissions from the source and can be correlated to the CEMS data. It is preferable to conduct the diluent (if applicable), moisture (if needed), and pollutant measurements simultaneously. However, diluent and moisture measurements that are taken within an hour of the pollutant measurements may be used to calculate dry pollutant concentration and emission rates. In order to correlate the CEMS and RM data properly, note the beginning and end of each RM test period of each run (including the exact time of day) on the CEMS chart recordings or other permanent record of

output. Use the following strategies for the RM tests:

8.4.3.1 For integrated samples (*e.g.,* Methods 6 and Method 4), make a sample traverse of at least 21 minutes, sampling for an equal time at each traverse point (see Section 8.1.3.2 for discussion of traverse points.

8.4.3.2 For grab samples (*e.g.,* Method 7), take one sample at each traverse point, scheduling the grab samples so that they are taken simultaneously (within a 3-minute period) or at an equal interval of time apart over the span of time the CEM pollutant is measured. A test run for grab samples must be made up of at least three separate measurements.

Note: At times, CEMS RA tests are conducted during new source performance standards performance tests. In these cases, RM results obtained during CEMS RA tests may be used to determine compliance as long as the source and test conditions are consistent with the applicable regulations.

8.4.4 Number of RM Tests. Conduct a minimum of nine sets of all necessary RM test runs.

Note: More than nine sets of RM tests may be performed. If this option is chosen, a maximum of three sets of the test results may be rejected so long as the total number of test results used to determine the RA is greater than or equal to nine. However, all data must be reported, including the rejected data.

8.4.5 Correlation of RM and CEMS Data. Correlate the CEMS and the RM test data as to the time and duration by first determining from the CEMS final output (the one used for reporting) the integrated average pollutant concentration or emission rate for each pollutant RM test period. Consider system response time, if important, and confirm that the pair of results are on a consistent moisture, temperature, and diluent concentration basis. Then, compare each integrated CEMS value against the corresponding average RM value. Use the following guidelines to make these comparisons.

8.4.5.1 If the RM has an integrated sampling technique, make a direct comparison of the RM results and CEMS integrated average value.

8.4.5.2 If the RM has a grab sampling technique, first average the results from all grab samples taken during the test run, and then compare this average value against the integrated value obtained from the CEMS chart recording or output during the run. If the pollutant concentration is varying with time over the run, the arithmetic average of the CEMS value recorded at the time of each grab sample may be used.

8.4.6 Calculate the mean difference between the RM and CEMS values in the units of the emission standard, the standard deviation, the confidence coefficient, and the relative accuracy according to the procedures in Section 12.0.

8.5 Reporting. At a minimum (check with the appropriate regional office, State, or Local agency for additional requirements, if any), summarize in tabular form the results of the CD tests and the RA tests or alternative RA procedure, as appropriate. Include all data sheets, calculations, charts (records of CEMS responses), cylinder gas concentration certifications, and calibration cell response certifications (if applicable) necessary to confirm that the performance of the CEMS met the performance specifications.

9.0 Quality Control [Reserved]

10.0 Calibration and Standardization [Reserved]

11.0 Analytical Procedure

Sample collection and analysis are concurrent for this Performance Specification (see Section 8.0). Refer to the RM for specific analytical procedures.

12.0 Calculations and Data Analysis

Summarize the results on a data sheet similar to that shown in Figure 2–2 (in Section 18.0).

12.1 All data from the RM and CEMS must be on a consistent dry basis and, as applicable, on a consistent diluent basis and in the units of the emission standard. Correct the RM and CEMS data for moisture and diluent as follows:

12.1.1 Moisture Correction (as applicable). Correct each wet RM run for moisture with the corresponding Method 4 data; correct each wet CEMS run using the corresponding CEMS moisture monitor date using Equation 2–1.

$$\text{Concentration}_{(\text{dry})} = \frac{\text{Concentration}_{\text{wet}}}{\left(1 - B_{ws}\right)} \qquad \text{Eq. 2-1}$$

12.1.2 Correction to Units of Standard (as applicable). Correct each dry RM run to the units of the emission standard with the corresponding Method 3B data; correct each dry CEMS run using the corresponding CEMS diluent monitor data as follows:

12.1.2.1 Correct to Diluent Basis. The following is an example of concentration (ppm) correction to 7% oxygen.

$$\text{ppm}_{(\text{corr})} = \text{ppm}_{(\text{uncorr})}\left[\frac{20.9 - 7.0}{20.9 - \%O_{2(\text{dry})}}\right] \qquad \text{Eq. 2-2}$$

The following is an example of mass/gross calorific value (lbs/million Btu) correction.

lbs/MMBtu = $\text{Conc}_{(\text{dry})}$ (F-factor) (20.9/20.9-%0_2)

12.2 Arithmetic Mean. Calculate the arithmetic mean of the difference, d, of a data set as follows:

$$\bar{d} = \frac{1}{n}\sum_{i=1}^{n} d_i \qquad \text{Eq. 2-3}$$

Where:

n = Number of data points.

$\sum_{i=1}^{n} d_i$ = Algebraic summation of the individual differences d_i.

12.3 Standard Deviation. Calculate the standard deviation, S_d, as follows:

$$S_d = \left[\frac{\sum_{i=1}^{n} d_i^2 - \frac{\left[\sum_{i=1}^{n} d_i\right]^2}{n}}{n-1} \right]^{\frac{1}{2}} \qquad \text{Eq. 2-4}$$

12.4 Confidence Coefficient. Calculate the 2.5 percent error confidence coefficient (one-tailed), CC, as follows:

$$CC = t_{0.975} \frac{S_d}{\sqrt{n}} \qquad \text{Eq. 2-5}$$

Where:

$t_{0.975}$ = t-value (see Table 2–1).

12.5 Relative Accuracy. Calculate the RA of a set of data as follows:

$$RA = \frac{\left[\left|\bar{d}\right| + \left|CC\right|\right]}{\overline{RM}} \times 100 \qquad \text{Eq. 2-6}$$

Where:

$|\bar{d}|$ = Absolute value of the mean differences (from Equation 2–3).

$|CC|$ = Absolute value of the confidence coefficient (from Equation 2–3).

$\overline{RM}$ = Average RM value. In cases where the average emissions for the test are less than 50 percent of the applicable standard, substitute the emission standard value in the denominator of Eq. 2–6 in place of $\overline{RM}$. In all other cases, use $\overline{RM}$.

13.0 Method Performance

13.1 Calibration Drift Performance Specification. The CEMS calibration must not drift or deviate from the reference value of the gas cylinder, gas cell, or optical filter by more than 2.5 percent of the span value. If the CEMS includes pollutant and diluent monitors, the CD must be determined separately for each in terms of concentrations (See Performance Specification 3 for the diluent specifications), and none of the CDs may exceed the specification.

13.2 Relative Accuracy Performance Specification. The RA of the CEMS must be no greater than 20 percent when RM is used in the denominator of Eq. 2–6 (average emissions during test are greater than 50 percent of the emission standard) or 10 percent when the applicable emission standard is used in the denominator of Eq. 2–6 (average emissions during test are less than 50 percent of the emission standard).

13.3 For instruments that use common components to measure more than one effluent gas constituent, all channels must simultaneously pass the RA requirement, unless it can be demonstrated that any adjustments made to one channel did not affect the others.

14.0 Pollution Prevention [Reserved]

15.0 Waste Management [Reserved]

16.0 Alternative Procedures

Paragraphs 60.13(j)(1) and (2) of 40 CFR part 60 contain criteria for which the reference method procedure for determining relative accuracy (see Section 8.4 of this Performance Specification) may be waived and the following procedure substituted.

16.1 Conduct a complete CEMS status check following the manufacturer's written instructions. The check should include operation of the light source, signal receiver, timing mechanism functions, data acquisition and data reduction functions, data recorders, mechanically operated functions (mirror movements, zero pipe operation, calibration gas valve operations, etc.), sample filters, sample line heaters, moisture traps, and other related functions of the CEMS, as applicable. All parts of the CEMS shall be functioning properly before proceeding to the alternative RA procedure.

16.2 Alternative RA Procedure.

16.2.1 Challenge each monitor (both pollutant and diluent, if applicable) with cylinder gases of known concentrations or calibration cells that produce known responses at two measurement points within the ranges shown in Table 2–2 (Section 18).

16.2.2 Use a separate cylinder gas (for point CEMS only) or calibration cell (for path CEMS or where compressed gas cylinders can not be used) for measurement points 1 and 2. Challenge the CEMS and record the responses three times at each measurement point. The Administrator may allow dilution of cylinder gas using the performance criteria in Test Method 205, 40 CFR Part 51, Appendix M. Use the average of the three responses in determining relative accuracy.

16.2.3 Operate each monitor in its normal sampling mode as nearly as possible. When using cylinder gases, pass the cylinder gas through all filters, scrubbers, conditioners, and other monitor components used during normal sampling and as much of the sampling probe as practical. When using calibration cells, the CEMS components used in the normal sampling mode should not be by-passed during the RA determination. These include light sources, lenses, detectors, and reference cells. The CEMS should be challenged at each measurement point for a sufficient period of time to assure adsorption-desorption reactions on the CEMS surfaces have stabilized.

16.2.4 Use cylinder gases that have been certified by comparison to National Institute of Standards and Technology (NIST) gaseous standard reference material (SRM) or NIST/EPA approved gas manufacturer's certified reference material (CRM) (See Reference 2 in Section 17.0) following EPA Traceability Protocol Number 1 (See Reference 3 in Section 17.0). As an alternative to Protocol Number 1 gases, CRM's may be used directly as alternative RA cylinder gases. A list of gas manufacturers that have prepared approved CRM's is available from EPA at the address shown in Reference 2. Procedures for preparation of CRM's are described in Reference 2.

16.2.5 Use calibration cells certified by the manufacturer to produce a known response in the CEMS. The cell certification procedure shall include determination of CEMS response produced by the calibration cell in direct comparison with measurement of gases of known concentration. This can be accomplished using SRM or CRM gases in a laboratory source simulator or through extended tests using reference methods at the CEMS location in the exhaust stack. These procedures are discussed in Reference 4 in Section 17.0. The calibration cell certification procedure is subject to approval of the Administrator.

16.3 The differences between the known concentrations of the cylinder gases and the concentrations indicated by the CEMS are used to assess the accuracy of the CEMS. The calculations and limits of acceptable relative accuracy are as follows:

16.3.1 For pollutant CEMS:

$$RA = \left| \left(\frac{\bar{d}}{AC} \right) 100 \right| \leq 15 \text{ percent} \qquad \text{Eq. 2-7}$$

Where:

$\bar{d}$ = Average difference between responses and the concentration/responses (see Section 16.2.2).

AC = The known concentration/response of the cylinder gas or calibration cell.

16.3.2 For diluent CEMS:

RA = $|\bar{d}| \leqq$ O.7 percent O_2 or CO_2, as applicable.

Note: Waiver of the relative accuracy test in favor of the alternative RA procedure does not preclude the requirements to complete the CD tests nor any other requirements specified in an applicable subpart for reporting CEMS data and performing CEMS drift checks or audits.

17.0 References

1. Department of Commerce. Experimental Statistics. Handbook 91. Washington, D.C. p. 3–31, paragraphs 3–3.1.4.

2. ''A Procedure for Establishing Traceability of Gas Mixtures to Certain National Bureau of Standards Standard Reference Materials.'' Joint publication by NBS and EPA. EPA 600/7–81–010. Available from U.S. Environmental Protection Agency, Quality Assurance Division (MD–77), Research Triangle Park, North Carolina 27711.

3. ''Traceability Protocol for Establishing True Concentrations of Gases Used for Calibration and Audits of Continuous Source Emission Monitors. (Protocol Number 1).'' June 1978. Protocol Number 1 is included in the Quality Assurance Handbook for Air Pollution Measurement Systems, Volume III, Stationary Source Specific Methods. EPA–600/4–77–027b. August 1977.

4. ''Gaseous Continuous Emission Monitoring Systems—Performance Specification Guidelines for SO_2, NO_X, CO_2, O_2, and TRS.'' EPA–450/3–82–026. Available from the U.S. EPA, Emission Measurement Center, Emission Monitoring and Data Analysis Division (MD–19), Research Triangle Park, North Carolina 27711.

18.0 Tables, Diagrams, Flowcharts, and Validation Data

TABLE 2–1.—T–VALUES

n[a]	$t_{0.975}$	n[a]	$t_{0.975}$	n[a]	$t_{0.975}$
2	12.706	7	2.447	12	2.201
3	4.303	8	2.365	13	2.179
4	3.182	9	2.306	14	2.160
5	2.776	10	2.262	15	2.145
6	2.571	11	2.228	16	2.131

[a] The values in this table are already corrected for n-1 degrees of freedom. Use n equal to the number of individual values.

TABLE 2–2.—MEASUREMENT RANGE

Measurement point	Pollutant monitor	Diluent monitor for	
		CO_2	O_2
1	20–30% of span value	5–8% by volume	4–6% by volume.
2	50–60% of span value	10–14% by volume	8–12% by volume.

	Day	Date and time	Calibration value (C)	Monitor value (M)	Difference (C–M)	Percent of span value (C–M)/span value × 100
Low-level						
High-level						

Figure 2–1. Calibration Drift Determination

FIGURE 2–2. RELATIVE ACCURACY DETERMINATION.

Run No.	Date and time	SO_2			NO_x[b]			CO_2 or O_2[a]		SO_2[a]			NO_x[a]		
		RM	CEMS	Diff	RM	CEMS	Diff	RM	CEMS	RM	CEMS	Diff	RM	CEMS	Diff
		ppm[c]			ppm[c]			%[c]	%[c]	mass/GCV			mass/GCV		
1.															
2.															
3.															
4.															
5.															
6.															
7.															
8.															
9.															
10.															
11.															
12.															
Average Confidence Interval Accuracy															

[a] For steam generators.
[b] Average of three samples.
[c] Make sure that RM and CEMS data are on a consistent basis, either wet or dry.

Performance Specification 3—Specifications and Test Procedures for O_2 and CO_2 Continuous Emission Monitoring Systems in Stationary Sources

1.0 Scope and Application

1.1 Analytes.

Analytes	CAS No.
Carbon Dioxide (CO_2)	124–38–9
Oxygen (O_2)	7782–44–7

1.2 Applicability.

1.2.1 This specification is for evaluating acceptability of O_2 and CO_2 continuous emission monitoring systems (CEMS) at the time of installation or soon after and whenever specified in an applicable subpart of the regulations. This specification applies to O_2 or CO_2 monitors that are not included under Performance Specification 2 (PS 2).

1.2.2 This specification is not designed to evaluate the installed CEMS performance over an extended period of time, nor does it identify specific calibration techniques and other auxiliary procedures to assess the CEMS performance. The source owner or operator, is responsible to calibrate, maintain, and operate the CEMS properly. The Administrator may require, under Section 114 of the Act, the operator to conduct CEMS performance evaluations at other times besides the initial test to evaluate the CEMS performance. See 40 CFR part 60, Section 60.13(c).

1.2.3 The definitions, installation and measurement location specifications, calculations and data analysis, and references are the same as in PS 2, Sections 3, 8.1, 12, and 17, respectively, and also apply to O_2 and CO_2 CEMS under this specification. The performance and equipment specifications and the relative accuracy (RA) test procedures for O_2 and CO_2 CEMS do not differ from those for SO_2 and NO_x CEMS (see PS 2), except as noted below.

2.0 Summary of Performance Specification

The RA and calibration drift (CD) tests are conducted to determine conformance of the CEMS to the specification.

3.0 Definitions

Same as in Section 3.0 of PS 2.

4.0 Interferences [Reserved]

5.0 Safety

This performance specification may involve hazardous materials, operations, and equipment. This performance specification may not address all of the safety problems associated with its use. It is the responsibility of the user to establish appropriate safety and health practices and determine the applicable regulatory limitations prior to performing this performance specification. The CEMS users manual should be consulted for specific precautions to be taken with regard to the analytical procedures.

6.0 Equipment and Supplies

Same as Section 6.0 of PS2.

7.0 Reagents and Standards

Same as Section 7.0 of PS2.

8.0 Sample Collection, Preservation, Storage, and Transport

8.1 Relative Accuracy Test Procedure. Sampling Strategy for reference method (RM) Tests, Correlation of RM and CEMS Data, and Number of RM Tests. Same as PS 2, Sections 8.4.3, 8.4.5, and 8.4.4, respectively.

8.2 Reference Method. Unless otherwise specified in an applicable subpart of the regulations, Method 3B or other approved alternative is the RM for O_2 or CO_2.

9.0 Quality Control [Reserved]

10.0 Calibration and Standardization [Reserved]

11.0 Analytical Procedure

Sample collection and analyses are concurrent for this performance specification (see Section 8). Refer to the RM for specific analytical procedures.

12.0 Calculations and Data Analysis

Summarize the results on a data sheet similar to that shown in Figure 2.2 of PS2. Calculate the arithmetic difference between the RM and the CEMS output for each run. The average difference of the nine (or more) data sets constitute the RA.

13.0 Method Performance

13.1 Calibration Drift Performance Specification. The CEMS calibration must not drift by more than 0.5 percent O_2 or CO_2 from the reference value of the gas, gas cell, or optical filter.

13.2 CEMS Relative Accuracy Performance Specification. The RA of the CEMS must be no greater than 1.0 percent O_2 or CO_2.

14.0 Pollution Prevention [Reserved]

15.0 Waste Management [Reserved]

16.0 References

Same as in Section 17.0 of PS 2.

17.0 Tables, Diagrams, Flowcharts, and Validation Data [Reserved]

Performance Specification 4—Specifications and Test Procedures for Carbon Monoxide Continuous Emission Monitoring Systems in Stationary Sources

1.0 Scope and Application

1.1 Analytes.

Analyte	CAS No.
Carbon Monoxide (CO)	630–08–0

1.2 Applicability.

1.2.1 This specification is for evaluating the acceptability of carbon monoxide (CO) continuous emission monitoring systems (CEMS) at the time of installation or soon after and whenever specified in an applicable subpart of the regulations. This specification was developed primarily for CEMS having span values of 1,000 ppmv CO.

1.2.2 This specification is not designed to evaluate the installed CEMS performance over an extended period of time nor does it identify specific calibration techniques and other auxiliary procedures to assess CEMS performance. The source owner or operator, is responsible to calibrate, maintain, and operate the CEMS. The Administrator may require, under Section 114 of the Act, the source owner or operator to conduct CEMS performance evaluations at other times besides the initial test to evaluate the CEMS performance. See 40 CFR part 60, Section 60.13(c).

1.2.3 The definitions, performance specification test procedures, calculations, and data analysis procedures for determining calibration drift (CD) and relative accuracy (RA) of Performance Specification 2 (PS 2), Sections 3, 8.0, and 12, respectively, apply to this specification.

2.0 Summary of Performance Specification

The CD and RA tests are conducted to determine conformance of the CEMS to the specification.

3.0 Definitions

Same as in Section 3.0 of PS 2.

4.0 Interferences [Reserved]

5.0 Safety

This performance specification may involve hazardous materials, operations, and equipment. This performance specification may not address all of the safety problems associated with its use. It is the responsibility of the user to establish appropriate safety and health practices and determine the applicable regulatory limitations prior to performing this performance specification. The CEMS users manual should be consulted for specific precautions to be taken with regard to the analytical procedures.

6.0 Equipment and Supplies

Same as Section 6.0 of PS 2.

7.0 Reagents and Standards

Same as Section 7.0 of PS 2.

8.0 Sample Collection, Preservation, Storage, and Transport

8.1 Relative Accuracy Test Procedure. Sampling Strategy for reference method (RM) Tests, Number of RM Tests, and Correlation of RM and CEMS Data are the same as PS 2, Sections 8.4.3, 8.4.4, and 8.4.5, respectively.

8.2 Reference Methods. Unless otherwise specified in an applicable subpart of the regulation, Method 10, 10A, 10B or other approved alternative are the RM for this PS. When evaluating nondispersive infrared CEMS using Method 10 as the RM, the alternative interference trap specified in Section 16.0 of Method 10 shall be used.

9.0 Quality Control [Reserved]

10.0 Calibration and Standardization [Reserved]

11.0 Analytical Procedure

Sample collection and analysis are concurrent for this performance specification (see Section 8.0). Refer to the RM for specific analytical procedures.

12.0 Calculations and Data Analysis

Same as Section 12.0 of PS 2.

13.0 Method Performance

13.1 Calibration Drift. The CEMS calibration must not drift or deviate from the reference value of the calibration gas, gas cell, or optical filter by more than 5 percent of the established span value for 6 out of 7 test days (*e.g.*, the established span value is 1000 ppm for Subpart J affected facilities).

13.2 Relative Accuracy. The RA of the CEMS must be no greater than 10 percent when the average RM value is used to calculate RA or 5 percent when the applicable emission standard is used to calculate RA.

14.0 Pollution Prevention [Reserved]

15.0 Waste Management [Reserved]

16.0 Alternative Procedures [Reserved]

17.0 References

1. Ferguson, B.B., R.E. Lester, and W.J. Mitchell. Field Evaluation of Carbon Monoxide and Hydrogen Sulfide Continuous Emission Monitors at an Oil Refinery. U.S. Environmental Protection Agency. Research Triangle Park, N.C. Publication No. EPA–600/4–82–054. August 1982. 100 p.

2. ''Gaseous Continuous Emission Monitoring Systems—Performance Specification Guidelines for SO_2, NO_x, CO_2, O_2, and TRS.'' EPA–450/3–82–026. U.S. Environmental Protection Agency, Technical Support Division (MD–19), Research Triangle Park, NC 27711.

3. Repp, M. Evaluation of Continuous Monitors for Carbon Monoxide in Stationary Sources. U.S. Environmental Protection Agency. Research Triangle Park, N.C. Publication No. EPA–600/2–77–063. March 1977. 155 p.

4. Smith, F., D.E. Wagoner, and R.P. Donovan. Guidelines for Development of a Quality Assurance Program: Volume VIII—Determination of CO Emissions from Stationary Sources by NDIR Spectrometry. U.S. Environmental Protection Agency. Research Triangle Park, N.C. Publication No. EPA–650/4–74–005–h. February 1975. 96 p.

18.0 Tables, Diagrams, Flowcharts, and Validation Data

Same as Section 18.0 of PS 2.

Performance Specification 4A—Specifications and Test Procedures for Carbon Monoxide Continuous Emission Monitoring Systems in Stationary Sources

1.0 Scope and Application

1.1 Analytes.

Analyte	CAS No.
Carbon Monoxide (CO)	630–80–0

1.2 Applicability.

1.2.1 This specification is for evaluating the acceptability of carbon monoxide (CO) continuous emission monitoring systems (CEMS) at the time of installation or soon after and whenever specified in an applicable subpart of the regulations. This specification was developed primarily for CEMS that comply with low emission standards (less than 200 ppmv).

1.2.2 This specification is not designed to evaluate the installed CEMS performance over an extended period of time nor does it identify specific calibration techniques and other auxiliary procedures to assess CEMS performance. The source owner or operator is responsible to calibrate, maintain, and operate the CEMS. The Administrator may require, under Section 114 of the Act, the source owner or operator to conduct CEMS performance evaluations at other times besides the initial test to evaluate CEMS performance. See 40 CFR Part 60, Section 60.13(c).

1.2.3 The definitions, performance specification, test procedures, calculations and data analysis procedures for determining calibration drifts (CD) and relative accuracy (RA), of Performance Specification 2 (PS 2), Sections 3, 8.0, and 12, respectively, apply to this specification.

2.0 Summary of Performance Specification

The CD and RA tests are conducted to determine conformance of the CEMS to the specification.

3.0 Definitions

Same as in Section 3.0 of PS 2.

4.0 Interferences. [Reserved]

5.0 Safety

This performance specification may involve hazardous materials, operations, and equipment. This performance specification may not address all of the safety problems associated with its use. It is the responsibility of the user to establish appropriate safety and health practices and determine the applicable regulatory limitations prior to performing this performance specification. The CEMS users manual should be consulted for specific precautions to be taken with regard to the analytical procedures.

6.0 Equipment and Supplies

Same as Section 6.0 of PS 2 with the following additions.

6.1 Data Recorder Scale.

6.1.1 This specification is the same as Section 6.1 of PS 2. The CEMS shall be capable of measuring emission levels under normal conditions and under periods of short-duration peaks of high concentrations. This dual-range capability may be met using two separate analyzers (one for each range) or by using dual-range units which have the capability of measuring both levels with a single unit. In the latter case, when the reading goes above the full-scale measurement value of the lower range, the higher-range operation shall be started automatically. The CEMS recorder range must include zero and a

high-level value. Under applications of consistent low emissions, a single-range analyzer is allowed provided normal and spike emissions can be quantified. In this case, set an appropriate high-level value to include all emissions.

6.1.2 For the low-range scale of dual-range units, the high-level value shall be between 1.5 times the pollutant concentration corresponding to the emission standard level and the span value. For the high-range scale, the high-level value shall be set at 2000 ppm, as a minimum, and the range shall include the level of the span value. There shall be no concentration gap between the low-and high-range scales.

7.0 Reagents and Standards

Same as Section 7.0 of PS 2.

8.0 Sample Collection, Preservation, Storage, and Transport

8.1 Relative Accuracy Test Procedure. Sampling Strategy for reference method (RM) Tests, Number of RM Tests, and Correlation of RM and CEMS Data are the same as PS 2, Sections 8.4.3, 8.4.4, and 8.4.5, respectively.

8.2 Reference Methods. Unless otherwise specified in an applicable subpart of the regulation, Methods 10, 10A, 10B, or other approved alternative is the RM for this PS. When evaluating nondispersive infrared CEMS using Method 10 as the RM, the alternative interference trap specified in Section 16.0 of Method 10 shall be used.

8.3 Response Time Test Procedure. The response time test applies to all types of CEMS, but will generally have significance only for extractive systems.

8.3.1 Introduce zero gas into the analyzer. When the system output has stabilized (no change greater than 1 percent of full scale for 30 sec), introduce an upscale calibration gas and wait for a stable value. Record the time (upscale response time) required to reach 95 percent of the final stable value. Next, reintroduce the zero gas and wait for a stable reading before recording the response time (downscale response time). Repeat the entire procedure three times and determine the mean upscale and downscale response times. The slower or longer of the two means is the system response time.

8.4 Interference Check. The CEMS must be shown to be free from the effects of any interferences.

9.0 Quality Control. [Reserved]

10.0 Calibration and Standardization. [Reserved]

11.0 Analytical Procedure

Sample collection and analysis are concurrent for this performance specification (see Section 8.0). Refer to the RM for specific analytical procedures.

12.0 Calculations and Data Analysis. Same as Section 12.0 of PS 2

13.0 Method Performance

13.1 Calibration Drift. The CEMS calibration must not drift or deviate from the reference value of the calibration gas, gas cell, or optical filter by more than 5 percent of the established span value for 6 out of 7 test days.

13.2 Relative Accuracy. The RA of the CEMS must be no greater than 10 percent when the average RM value is used to calculate RA, 5 percent when the applicable emission standard is used to calculate RA, or within 5 ppmv when the RA is calculated as the absolute average difference between the RM and CEMS plus the 2.5 percent confidence coefficient.

13.3 Response Time. The CEMS response time shall not exceed 1.5 min to achieve 95 percent of the final stable value.

14.0 Pollution Prevention [Reserved]

15.0 Waste Management [Reserved]

16.0 Alternative Procedures

16.1 Under conditions where the average CO emissions are less than 10 percent of the standard and this is verified by Method 10, a cylinder gas audit may be performed in place of the RA test to determine compliance with these limits. In this case, the cylinder gas shall contain CO in 12 percent carbon dioxide as an interference check. If this option is exercised, Method 10 must be used to verify that emission levels are less than 10 percent of the standard.

17.0 References

Same as Section 17 of PS 4.

18.0 Tables, Diagrams, Flowcharts, and Validation Data

Same as Section 18.0 of PS 2.

Performance Specification 5—Specifications and Test Procedures for TRS Continuous Emission Monitoring Systems in Stationary Sources

1.0 Scope and Application

1.1 Analytes.

Analyte	CAS No.
Total Reduced Sulfur (TRS)	NA

1.2 Applicability. This specification is for evaluating the applicability of TRS continuous emission monitoring systems (CEMS) at the time of installation or soon after and whenever specified in an applicable subpart of the regulations. The CEMS may include oxygen monitors which are subject to Performance Specification 3 (PS 3).

1.3 The definitions, performance specification, test procedures, calculations and data analysis procedures for determining calibration drifts (CD) and relative accuracy (RA) of PS 2, Sections 3.0, 8.0, and 12.0, respectively, apply to this specification.

2.0 Summary of Performance Specification

The CD and RA tests are conducted to determine conformance of the CEMS to the specification.

3.0 Definitions

Same as in Section 3.0 of PS 2.

4.0 Interferences [Reserved]

5.0 Safety

This performance specification may involve hazardous materials, operations, and equipment. This performance specification may not address all of the safety problems associated with its use. It is the responsibility of the user to establish appropriate safety and health practices and determine the applicable regulatory limitations prior to performing this performance specification. The CEMS users manual should be consulted for specific precautions to be taken with regard to the analytical procedures.

6.0 Equipment and Supplies

Same as Section 6.0 of PS 2.

7.0 Reagents and Standards

Same as Section 7.0 of PS 2.

8.0 Sample Collection, Preservation, Storage, and Transport

8.1 Relative Accuracy Test Procedure. Sampling Strategy for reference method (RM) Tests, Number of RM Tests, and Correlation of RM and CEMS Data are the same as PS 2, Sections 8.4.3, 8.4.4, and 8.4.5, respectively.

Note: For Method 16, a sample is made up of at least three separate injects equally space over time. For Method 16A, a sample is collected for at least 1 hour.

8.2 Reference Methods. Unless otherwise specified in the applicable subpart of the regulations, Method 16,

Method 16A, 16B or other approved alternative is the RM for TRS.

9.0 Quality Control [Reserved]

10.0 Calibration and Standardization [Reserved]

11.0 Analytical Procedure

Sample collection and analysis are concurrent for this performance specification (see Section 8.0). Refer to the reference method for specific analytical procedures.

12.0 Calculations and Data Analysis

Same as Section 12.0 of PS 2.

13.0 Method Performance

13.1 Calibration Drift. The CEMS detector calibration must not drift or deviate from the reference value of the calibration gas by more than 5 percent of the established span value for 6 out of 7 test days. This corresponds to 1.5 ppm drift for Subpart BB sources where the span value is 30 ppm. If the CEMS includes pollutant and diluent monitors, the CD must be determined separately for each in terms of concentrations (see PS 3 for the diluent specifications).

13.2 Relative Accuracy. The RA of the CEMS must be no greater than 20 percent when the average RM value is used to calculate RA or 10 percent when the applicable emission standard is used to calculate RA.

14.0 Pollution Prevention [Reserved]

15.0 Waste Management [Reserved]

16.0 Alternative Procedures [Reserved]

17.0 References

1. Department of Commerce. Experimental Statistics, National Bureau of Standards, Handbook 91. 1963. Paragraphs 3–3.1.4, p. 3–31.

2. A Guide to the Design, Maintenance and Operation of TRS Monitoring Systems. National Council for Air and Stream Improvement Technical Bulletin No. 89. September 1977.

3. Observation of Field Performance of TRS Monitors on a Kraft Recovery Furnace. National Council for Air and Stream Improvement Technical Bulletin No. 91. January 1978.

18.0 Tables, Diagrams, Flowcharts, and Validation Data

Same as Section 18.0 of PS 2.

Performance Specification 6—Specifications and Test Procedures for Continuous Emission Rate Monitoring Systems in Stationary Sources

1.0 Scope and Application

1.1 Applicability. This specification is used for evaluating the acceptability of continuous emission rate monitoring systems (CERMSs).

1.2 The installation and measurement location specifications, performance specification test procedure, calculations, and data analysis procedures, of Performance Specifications (PS 2), Sections 8.0 and 12, respectively, apply to this specification.

2.0 Summary of Performance Specification

The calibration drift (CD) and relative accuracy (RA) tests are conducted to determine conformance of the CERMS to the specification.

3.0 Definitions

The definitions are the same as in Section 3 of PS 2, except this specification refers to the continuous emission rate monitoring system rather than the continuous emission monitoring system. The following definitions are added:

3.1 *Continuous Emission Rate Monitoring System (CERMS).* The total equipment required for the determining and recording the pollutant mass emission rate (in terms of mass per unit of time).

3.2 *Flow Rate Sensor.* That portion of the CERMS that senses the volumetric flow rate and generates an output proportional to that flow rate. The flow rate sensor shall have provisions to check the CD for each flow rate parameter that it measures individually (*e.g.*, velocity, pressure).

4.0 Interferences [Reserved]

5.0 Safety

This performance specification may involve hazardous materials, operations, and equipment. This performance specification may not address all of the safety problems associated with its use. It is the responsibility of the user to establish appropriate safety and health practices and determine the applicable regulatory limitations prior to performing this performance specification. The CERMS users manual should be consulted for specific precautions to be taken with regard to the analytical procedures.

6.0 Equipment and Supplies

Same as Section 6.0 of PS 2.

7.0 Reagents and Standards

Same as Section 7.0 of PS 2.

8.0 Sample Collection, Preservation, Storage, and Transport

8.1 Calibration Drift Test Procedure.

8.1.1 The CD measurements are to verify the ability of the CERMS to conform to the established CERMS calibrations used for determining the emission rate. Therefore, if periodic automatic or manual adjustments are made to the CERMS zero and calibration settings, conduct the CD tests immediately before these adjustments, or conduct them in such a way that CD can be determined.

8.1.2 Conduct the CD tests for pollutant concentration at the two values specified in Section 6.1.2 of PS 2. For other parameters that are selectively measured by the CERMS (*e.g.,* velocity, pressure, flow rate), use two analogous values (*e.g.,* Low: 0–20% of full scale, High: 50–100% of full scale). Introduce to the CERMS the reference signals (these need not be certified). Record the CERMS response to each and subtract this value from the respective reference value (see example data sheet in Figure 6–1).

8.2 Relative Accuracy Test Procedure.

8.2.1 Sampling Strategy for reference method (RM) Tests, Correlation of RM and CERMS Data, and Number of RM Tests are the same as PS 2, Sections 8.4.3, 8.4.5, and 8.4.4, respectively. Summarize the results on a data sheet. An example is shown in Figure 6–1. The RA test may be conducted during the CD test period.

8.2.2 Reference Methods. Unless otherwise specified in the applicable subpart of the regulations, the RM for the pollutant gas is the Appendix A method that is cited for compliance test purposes, or its approved alternatives. Methods 2, 2A, 2B, 2C, or 2D, as applicable, are the RMs for the determination of volumetric flow rate.

9.0 Quality Control [Reserved]

10.0 Calibration and Standardization [Reserved]

11.0 Analytical Procedure

Same as Section 11.0 of PS 2.

12.0 Calculations and Data Analysis

Same as Section 12.0 of PS 2.

13.0 Method Performance

13.1 Calibration Drift. Since the CERMS includes analyzers for several measurements, the CD shall be determined separately for each analyzer in terms of its specific measurement. The calibration for each analyzer associated with the measurement of flow rate shall not drift or deviate from each reference value of flow rate by more than 3 percent of the respective high-level value. The CD specification for each analyzer for which other PSs have been established (*e.g.,* PS 2 for SO_2

and NO_X), shall be the same as in the applicable PS.

13.2 CERMS Relative Accuracy. The RA of the CERMS shall be no greater than 20 percent of the mean value of the RM's test data in terms of the units of the emission standard, or 10 percent of the applicable standard, whichever is greater.

14.0 Pollution Prevention [Reserved]

15.0 Waste Management [Reserved]

16.0 Alternative Procedures

Same as in Section 16.0 of PS 2.

17.0 References

1. Brooks, E.F., E.C. Beder, C.A. Flegal, D.J. Luciani, and R. Williams. Continuous Measurement of Total Gas Flow Rate from Stationary Sources. U.S. Environmental Protection Agency. Research Triangle Park, North Carolina. Publication No. EPA–650/2–75–020. February 1975. 248 p.

18.0 Tables, Diagrams, Flowcharts, and Validation Data

Run No.	Date and time	Emission rate (kg/hr)[a]		
		CERMS	RMs	Difference (RMs-CERMS)
1				
2				
3				
4				
5				
6				
7				
8				
9				

[a] The RMs and CERMS data as corrected to a consistent basis (*i.e.*, moisture, temperature, and pressure conditions).

Figure 6–1.—Emission Rate Determinations

Performance Specification 7—Specifications and Test Procedures for Hydrogen Sulfide Continuous Emission Monitoring Systems in Stationary Sources

1.0 Scope and Application

1.1 Analytes.

Analyte	CAS No.
Hydrogen Sulfide	7783–06–4

1.2 Applicability.

1.2.1 This specification is to be used for evaluating the acceptability of hydrogen sulfide (H_2S) continuous emission monitoring systems (CEMS) at the time of or soon after installation and whenever specified in an applicable subpart of the regulations.

1.2.2 This specification is not designed to evaluate the installed CEMS performance over an extended period of time nor does it identify specific calibration techniques and other auxiliary procedures to assess CEMS performance. The source owner or operator, however, is responsible to calibrate, maintain, and operate the CEMS. To evaluate CEMS performance, the Administrator may require, under Section 114 of the Act, the source owner or operator to conduct CEMS performance evaluations at other times besides the initial test. See Section 60.13(c).

2.0 Summary

Calibration drift (CD) and relative accuracy (RA) tests are conducted to determine that the CEMS conforms to the specification.

3.0 Definitions

Same as Section 3.0 of PS 2.

4.0 Interferences. [Reserved]

5.0 Safety

The procedures required under this performance specification may involve hazardous materials, operations, and equipment. This performance specification may not address all of the safety problems associated with these procedures. It is the responsibility of the user to establish appropriate safety problems associated with these procedures. It is the responsibility of the user to establish appropriate safety and health practices and determine the application regulatory limitations prior to performing these procedures. The CEMS user's manual and materials recommended by the reference method should be consulted for specific precautions to be taken.

6.0 Equipment and Supplies

6.1 Instrument Zero and Span. This specification is the same as Section 6.1 of PS 2.

6.2 Calibration Drift. The CEMS calibration must not drift or deviate from the reference value of the calibration gas or reference source by more than 5 percent of the established span value for 6 out of 7 test days (e.g., the established span value is 300 ppm for Subpart J fuel gas combustion devices).

6.3 Relative Accuracy. The RA of the CEMS must be no greater than 20 percent when the average reference method (RM) value is used to calculate RA or 10 percent when the applicable emission standard is used to calculate RA.

7.0 Reagents and Standards

Same as Section 7.0 of PS 2.

8.0 Sample Collection, Preservation, Storage, and Transport.

8.1 Installation and Measurement Location Specification. Same as Section 8.1 of PS 2.

8.2 Pretest Preparation. Same as Section 8.2 of PS 2.

8.3 Calibration Drift Test Procedure. Same as Section 8.3 of PS 2.

8.4 Relative Accuracy Test Procedure.

8.4.1 Sampling Strategy for RM Tests, Correlation of RM and CEMS Data, and Number of RM Tests. These are the same as that in PS 2, Sections 8.4.3, 8.4.5, and 8.4.4, respectively.

8.4.2 Reference Methods. Unless otherwise specified in an applicable subpart of the regulation, Method 11 is the RM for this PS.

8.5 Reporting. Same as Section 8.5 of PS 2.

9.0 Quality Control. [Reserved]

10.0 Calibration and Standardizations. [Reserved]

11.0 Analytical Procedures

Sample Collection and analysis are concurrent for this PS (see Section 8.0). Refer to the RM for specific analytical procedures.

12.0 Data Analysis and Calculations

Same as Section 12.0 of PS 2.

13.0 Method Performance. [Reserved]

14.0 Pollution Prevention. [Reserved]

15.0 Waste Management. [Reserved]

16.0 References

1. U.S. Environmental Protection Agency. Standards of Performance for New Stationary Sources; Appendix B; Performance Specifications 2 and 3 for SO_2, NO_X, CO_2, and O_2 Continuous Emission Monitoring Systems; Final Rule. 48 CFR 23608. Washington, D.C. U.S. Government Printing Office. May 25, 1983.

2. U.S. Government Printing Office. Gaseous Continuous Emission Monitoring Systems—Performance Specification Guidelines for SO_2, NO_X, CO_2, O_2, and TRS. U.S. Environmental Protection Agency. Washington, D.C. EPA-450/3–82–026. October 1982. 26 p.

3. Maines, G.D., W.C. Kelly (Scott Environmental Technology, Inc.), and J.B. Homolya. Evaluation of Monitors for Measuring H_2S in Refinery Gas. Prepared for the U.S. Environmental Protection Agency. Research Triangle Park, N.C. Contract No. 68–02–2707. 1978. 60 p.

4. Ferguson, B.B., R.E. Lester (Harmon Engineering and Testing), and W.J. Mitchell. Field Evaluation of Carbon Monoxide and Hydrogen Sulfide Continuous Emission Monitors at an Oil Refinery. Prepared for the U.S. Environmental Protection Agency. Research Triangle Park, N.C. Publication No. EPA–600/4–82–054. August 1982. 100 p.

17.0 Tables, Diagrams, Flowcharts, and Validation Data

Same as Section 18.0 of PS 2.

Performance Specification 8 Performance Specifications for Volatile Organic Compound Continuous Emission Monitoring Systems in Stationary Sources

1.0 Scope and Application

1.1 Analytes. Volatile Organic Compounds (VOCs).

1.2 Applicability.

1.2.1 This specification is to be used for evaluating a continuous emission monitoring system (CEMS) that measures a mixture of VOC's and generates a single combined response value. The VOC detection principle may be flame ionization (FI), photoionization (PI), non-dispersive infrared absorption (NDIR), or any other detection principle that is appropriate for the VOC species present in the emission gases and that meets this performance specification. The performance specification includes procedures to evaluate the acceptability of the CEMS at the time of or soon after its installation and whenever specified in emission regulations or permits. This specification is not designed to evaluate the installed CEMS performance over an extended period of time, nor does it identify specific calibration techniques and other auxiliary procedures to assess the CEMS performance. The source owner or operator, however, is responsible to calibrate, maintain, and operate the CEMS properly. To evaluate the CEMS performance, the Administrator may require, under Section 114 of the Act, the operator to conduct CEMS performance evaluations in addition to the initial test. See Section 60.13(c).

1.2.2 In most emission circumstances, most VOC monitors can provide only a relative measure of the total mass or volume concentration of a mixture of organic gases, rather than an accurate quantification. This problem is removed when an emission standard is based on a total VOC measurement as obtained with a particular detection principle. In those situations where a true mass or volume VOC concentration is needed, the problem can be mitigated by using the VOC CEMS as a relative indicator of total VOC concentration if statistical analysis indicates that a sufficient margin of compliance exists for this approach to be acceptable. Otherwise, consideration can be given to calibrating the CEMS with a mixture of the same VOC's in the same proportions as they actually occur in the measured source. In those circumstances where only one organic species is present in the source, or where equal incremental amounts of each of the organic species present generate equal CEMS responses, the latter choice can be more easily achieved.

2.0 Summary of Performance Specification

2.1 Calibration drift and relative accuracy tests are conducted to determine adherence of the CEMS with specifications given for those items. The performance specifications include criteria for installation and measurement location, equipment and performance, and procedures for testing and data reduction.

3.0 Definitions.

Same as Section 3.0 of PS 2.

4.0 Interferences. [Reserved]

5.0 Safety

The procedures required under this performance specification may involve hazardous materials, operations, and equipment. This performance specification may not address all of the safety problems associated with these procedures. It is the responsibility of the user to establish appropriate safety problems associated with these procedures. It is the responsibility of the user to establish appropriate safety and health practices and determine the application regulatory limitations prior to performing these procedures. The CEMS user's manual and materials recommended by the reference method should be consulted for specific precautions to be taken.

6.0 Equipment and Supplies

6.1 VOC CEMS Selection. When possible, select a VOC CEMS with the detection principle of the reference method specified in the regulation or permit (usually either FI, NDIR, or PI). Otherwise, use knowledge of the source process chemistry, previous emission studies, or gas chromatographic analysis of the source gas to select an appropriate VOC CEMS. Exercise extreme caution in choosing and installing any CEMS in an area with explosive hazard potential.

6.2 Data Recorder Scale. Same as Section 6.1 of PS 2.

7.0 Reagents and Standards. [Reserved]

8.0 Sample Collection, Preservation, Storage, and Transport

8.1 Installation and Measurement Location Specifications. Same as Section 8.1 of PS 2.

8.2 Pretest Preparation. Same as Section 8.2 of PS 2.

8.3 Reference Method (RM). Use the method specified in the applicable regulation or permit, or any approved alternative, as the RM.

8.4 Sampling Strategy for RM Tests, Correlation of RM and CEMS Data, and Number of RM Tests. Follow PS 2, Sections 8.4.3, 8.4.5, and 8.4.4, respectively.

8.5 Reporting. Same as Section 8.5 of PS 2.

9.0 Quality Control. [Reserved]

10.0 Calibration and Standardization. [Reserved]

11.0 Analytical Procedure

Sample collection and analysis are concurrent for this PS (see Section 8.0). Refer to the RM for specific analytical procedures.

12.0 Calculations and Data Analysis

Same as Section 12.0 of PS 2.

13.0 Method Performance

13.1 Calibration Drift. The CEMS calibration must not drift by more than 2.5 percent of the span value.

13.2 CEMS Relative Accuracy. Unless stated otherwise in the regulation or permit, the RA of the CEMS must not be greater than 20 percent of the mean value of the RM test data in terms of the units of the emission standard, or 10 percent of the applicable standard, whichever is greater.

14.0 Pollution Prevention. [Reserved]

15.0 Waste Management. [Reserved]

16.0 References

Same as Section 17.0 of PS 2.

17.0 Tables, Diagrams, Flowcharts, and Validation Data. [Reserved]

Performance Specification 9—Specifications and Test Procedures for Gas Chromatographic Continuous Emission Monitoring Systems in Stationary Sources

1.0 Scope and Application

1.1 Applicability. These requirements apply to continuous emission monitoring systems (CEMSs) that use gas chromatography (GC) to measure gaseous organic compound emissions. The requirements include procedures intended to evaluate the acceptability of the CEMS at the time of its installation and whenever specified in regulations or permits. Quality assurance procedures for calibrating, maintaining, and operating the CEMS properly at all times are also given in this procedure.

2.0 Summary of Performance Specification

2.1 Calibration precision, calibration error, and performance audit tests are conducted to determine conformance of the CEMS with these specifications. Daily calibration and maintenance requirements are also specified.

3.0 Definitions

3.1 Gas Chromatograph (GC). That portion of the system that separates and detects organic analytes and generates an output proportional to the gas concentration. The GC must be temperature controlled.

Note: The term temperature controlled refers to the ability to maintain a certain temperature around the column. Temperature-programmable GC is not required for this performance specification, as long as all other requirements for precision, linearity and accuracy listed in this performance specification are met. It should be noted that temperature programming a GC will speed up peak elution, thus allowing increased sampling frequency.

3.1.1 Column. Analytical column capable of separating the analytes of interest.

3.1.2 Detector. A detection system capable of detecting and quantifying all analytes of interest.

3.1.3 Integrator. That portion of the system that quantifies the area under a particular sample peak generated by the GC.

3.1.4 Data Recorder. A strip chart recorder, computer, or digital recorder capable of recording all readings within the instrument's calibration range.

3.2 Calibration Precision. The error between triplicate injections of each calibration standard.

4.0 Interferences [Reserved]

5.0 Safety

The procedures required under this performance specification may involve hazardous materials, operations, and equipment. This performance specification does not purport to address all of the safety problems associated with these procedures. It is the responsibility of the user to establish appropriate safety problems associated with these procedures. It is the responsibility of the user to establish appropriate safety and health practices and determine the application regulatory limitations prior to performing these procedures. The CEMS user's manual and materials recommended by the reference method should be consulted for specific precautions to be taken.

6.0 Equipment and Supplies

6.1 Presurvey Sample Analysis and GC Selection. Determine the pollutants to be monitored from the applicable regulation or permit and determine the approximate concentration of each pollutant (this information can be based on past compliance test results). Select an appropriate GC configuration to measure the organic compounds. The GC components should include a heated sample injection loop (or other sample introduction systems), separatory column, temperature-controlled oven, and detector. If the source chooses dual column and/or dual detector configurations, each column/detector is considered a separate instrument for the purpose of this performance specification and thus the procedures in this performance specification shall be carried out on each system. If this method is applied in highly explosive areas, caution should be exercised in selecting the equipment and method of installation.

6.2 Sampling System. The sampling system shall be heat traced and maintained at a minimum of 120 °C with no cold spots. All system components shall be heated, including the probe, calibration valve, sample lines, sampling loop (or sample introduction system), GC oven, and the detector block (when appropriate for the type of detector being utilized, *e.g.,* flame ionization detector).

7.0 Reagents and Standards

7.1 Calibration Gases. Obtain three concentrations of calibration gases certified by the manufacturer to be accurate to within 2 percent of the value on the label. A gas dilution system may be used to prepare the calibration gases from a high concentration certified standard if the gas dilution system meets the requirements specified in Test Method 205, 40 CFR Part 51, Appendix M. The performance test specified in Test Method 205 shall be repeated quarterly, and the results of the Method 205 test shall be included in the report. The calibration gas concentration of each target analyte shall be as follows (measured concentration is based on the presurvey concentration determined in Section 6.1).

Note: If the low level calibration gas concentration falls at or below the limit of detection for the instrument for any target pollutant, a calibration gas with a concentration at 4 to 5 times the limit of detection for the instrument may be substituted for the low-level calibration gas listed in Section 7.1.1.

7.1.1 Low-level. 40–60 percent of measured concentration.

7.1.2 Mid-level. 90–110 percent of measured concentration.

7.1.3 High-level. 140–160 percent of measured concentration, or select highest expected concentration.

7.2 Performance Audit Gas. A certified EPA audit gas shall be used, when possible. A gas mixture containing all the target compounds within the calibration range and certified by EPA's Traceability Protocol for Assay and Certification of Gaseous Calibration Standards may be used when EPA performance audit materials

are not available. The instrument relative error shall be ≤ 10 percent of the certified value of the audit gas.

8.0 Sample Collection, Preservation, Storage, and Transport

8.1 Installation and Measurement Location Specifications. Install the CEMs in a location where the measurements are representative of the source emissions. Consider other factors, such as ease of access for calibration and maintenance purposes. The location should not be close to air in-leakages. The sampling location should be at least two equivalent duct diameters downstream from the nearest control device, point of pollutant generation, or other point at which a change in the pollutant concentration or emission rate occurs. The location should be at least 0.5 diameter upstream from the exhaust or control device. To calculate equivalent duct diameter, see Section 12.2 of Method 1 (40 CFR Part 60, Appendix A). Sampling locations not conforming to the requirements in this section may be used if necessary upon approval of the Administrator.

8.2 Pretest Preparation Period. Using the procedures described in Method 18 (40 CFR Part 60, Appendix A), perform initial tests to determine GC conditions that provide good resolution and minimum analysis time for compounds of interest. Resolution interferences that may occur can be eliminated by appropriate GC column and detector choice or by shifting the retention times through changes in the column flow rate and the use of temperature programming.

8.3 7-Day Calibration Error (CE) Test Period. At the beginning of each 24-hour period, set the initial instrument setpoints by conducting a multi-point calibration for each compound. The multi-point calibration shall meet the requirements in Section 13.3. Throughout the 24-hour period, sample and analyze the stack gas at the sampling intervals prescribed in the regulation or permit. At the end of the 24 hour period, inject the three calibration gases for each compound in triplicate and determine the average instrument response. Determine the CE for each pollutant at each level using the equation in Section 9–2.

Each CE shall be ≤ 10 percent. Repeat this procedure six more times for a total of 7 consecutive days.

8.4 Performance Audit Test Periods. Conduct the performance audit once during the initial 7-day CE test and quarterly thereafter. Sample and analyze the EPA audit gas(es) (or the gas mixture prepared by EPA's traceability protocol if an EPA audit gas is not available) three times. Calculate the average instrument response. Report the audit results as part of the reporting requirements in the appropriate regulation or permit (if using a gas mixture, report the certified cylinder concentration of each pollutant).

8.5 Reporting. Follow the reporting requirements of the applicable regulation or permit. If the reporting requirements include the results of this performance specification, summarize in tabular form the results of the CE tests. Include all data sheets, calculations, CEMS data records, performance audit results, and calibration gas concentrations and certifications.

9.0 Quality Control [Reserved]

10.0 Calibration and Standardization

10.1 Initial Multi-Point Calibration. After initial startup of the GC, after routine maintenance or repair, or at least once per month, conduct a multi-point calibration of the GC for each target analyte. The multi-point calibration for each analyte shall meet the requirements in Section 13.3.

10.2 Daily Calibration. Once every 24 hours, analyze the mid-level calibration standard for each analyte in triplicate. Calculate the average instrument response for each analyte. The average instrument response shall not vary more than 10 percent from the certified concentration value of the cylinder for each analyte. If the difference between the analyzer response and the cylinder concentration for any target compound is greater than 10 percent, immediately inspect the instrument making any necessary adjustments, and conduct an initial multi-point calibration as described in Section 10.1.

11.0 Analytical Procedure. Sample Collection and Analysis Are Concurrent for This Performance Specification (See Section 8.0)

12.0 Calculations and Data Analysis

12.1 Nomenclature.

C_m = average instrument response, ppm.
C_a = cylinder gas value, ppm.
F = Flow rate of stack gas through sampling system, in Liters/min.
n = Number of measurement points.
r^2 = Coefficient of determination.
V = Sample system volume, in Liters, which is the volume inside the sample probe and tubing leading from the stack to the sampling loop.
x = CEMS response.
y = Actual value of calibration standard.

12.2 Coefficient of Determination. Calculate r^2 using linear regression analysis and the average concentrations obtained at three calibration points as shown in Equation 9–1.

$$r^2 = \left(\frac{n\sum x_i y_i - \left(\sum x_i\right)\left(\sum y_i\right)}{\sqrt{\left(n\sum y_i^2 - \sum y_i \sum y_i\right)\left(n\sum x_i^2 - \sum x_i \sum x_i\right)}} \right)^2 \qquad \text{Eq. 9-1}$$

12.3 Calibration Error Determination. Determine the percent calibration error (CE) at each concentration for each pollutant using the following equation.

$$CE = \frac{C_m - C_a}{C_a} \times 100 \qquad \text{Eq. 9-2}$$

12.4 Sampling System Time Constant (T).

$$T = \frac{F}{V} \qquad \text{Eq. 9-3}$$

13.0 Method Performance

13.1 Calibration Error (CE). The CEMS must allow the determination of CE at all three calibration levels. The average CEMS calibration response must not differ by more than 10 percent of calibration gas value at each level after each 24-hour period of the initial test.

13.2 Calibration Precision and Linearity. For each triplicate injection at each concentration level for each target analyte, any one injection shall not deviate more than 5 percent from the average concentration measured at that level. The linear regression curve for each organic compound at all three levels shall have an $r^2 \geq 0.995$ (using Equation 9–1).

13.3 Measurement Frequency. The sample to be analyzed shall flow continuously through the sampling system. The sampling system time

constant shall be ≤5 minutes or the sampling frequency specified in the applicable regulation, whichever is less. Use Equation 9–3 to determine T. The analytical system shall be capable of measuring the effluent stream at the frequency specified in the appropriate regulation or permit.

14.0 Pollution Prevention. [Reserved]

15.0 Waste Management. [Reserved]

16.0 References. [Reserved]

17.0 Tables, Diagrams, Flowcharts, and Validation Data [Reserved]

218. In Part 60, Appendix B is amended by adding Performance Specification 15 as follows:

Appendix B—Performance Specifications

* * * * *

Performance Specification 15—Performance Specification for Extractive FTIR Continuous Emissions Monitor Systems in Stationary Sources

1.0 Scope and Application

1.1 Analytes. This performance specification is applicable for measuring all hazardous air pollutants (HAPs) which absorb in the infrared region and can be quantified using Fourier Transform Infrared Spectroscopy (FTIR), as long as the performance criteria of this performance specification are met. This specification is to be used for evaluating FTIR continuous emission monitoring systems for measuring HAPs regulated under Title III of the 1990 Clean Air Act Amendments. This specification also applies to the use of FTIR CEMs for measuring other volatile organic or inorganic species.

1.2 Applicability. A source which can demonstrate that the extractive FTIR system meets the criteria of this performance specification for each regulated pollutant may use the FTIR system to continuously monitor for the regulated pollutants.

2.0 Summary of Performance Specification

For compound-specific sampling requirements refer to FTIR sampling methods (*e.g.*, reference 1). For data reduction procedures and requirements refer to the EPA FTIR Protocol (reference 2), hereafter referred to as the ''FTIR Protocol.'' This specification describes sampling and analytical procedures for quality assurance. The infrared spectrum of any absorbing compound provides a distinct signature. The infrared spectrum of a mixture contains the superimposed spectra of each mixture component. Thus, an FTIR CEM provides the capability to continuously measure multiple components in a sample using a single analyzer. The number of compounds that can be speciated in a single spectrum depends, in practice, on the specific compounds present and the test conditions.

3.0 Definitions

For a list of definitions related to FTIR spectroscopy refer to Appendix A of the FTIR Protocol. Unless otherwise specified, spectroscopic terms, symbols and equations in this performance specification are taken from the FTIR Protocol or from documents cited in the Protocol. Additional definitions are given below.

3.1 FTIR Continuous Emission Monitoring System (FTIR CEM).

3.1.1 *FTIR System*. Instrument to measure spectra in the mid-infrared spectral region (500 to 4000 cm^{-1}). It contains an infrared source, interferometer, sample gas containment cell, infrared detector, and computer. The interferometer consists of a beam splitter that divides the beam into two paths, one path a fixed distance and the other a variable distance. The computer is equipped with software to run the interferometer and store the raw digitized signal from the detector (interferogram). The software performs the mathematical conversion (the Fourier transform) of the interferogram into a spectrum showing the frequency dependent sample absorbance. All spectral data can be stored on computer media.

3.1.2 *Gas Cell*. A gas containment cell that can be evacuated. It contains the sample as the infrared beam passes from the interferometer, through the sample, and to the detector. The gas cell may have multi-pass mirrors depending on the required detection limit(s) for the application.

3.1.3 *Sampling System*. Equipment used to extract sample from the test location and transport the gas to the FTIR analyzer. Sampling system components include probe, heated line, heated non-reactive pump, gas distribution manifold and valves, flow measurement devices and any sample conditioning systems.

3.2 *Reference CEM*. An FTIR CEM, with sampling system, that can be used for comparison measurements.

3.3 *Infrared Band (also Absorbance Band or Band)*. Collection of lines arising from rotational transitions superimposed on a vibrational transition. An infrared absorbance band is analyzed to determine the analyte concentration.

3.4 *Sample Analysis*. Interpreting infrared band shapes, frequencies, and intensities to obtain sample component concentrations. This is usually performed by a software routine using a classical least squares (cls), partial least squares (pls), or K- or P- matrix method.

3.5 *(Target) Analyte*. A compound whose measurement is required, usually to some established limit of detection and analytical uncertainty.

3.6 *Interferant*. A compound in the sample matrix whose infrared spectrum overlaps at least part of an analyte spectrum complicating the analyte measurement. The interferant may not prevent the analyte measurement, but could increase the analytical uncertainty in the measured concentration. Reference spectra of interferants are used to distinguish the interferant bands from the analyte bands. An interferant for one analyte may not be an interferant for other analytes.

3.7 *Reference Spectrum*. Infrared spectra of an analyte, or interferant, prepared under controlled, documented, and reproducible laboratory conditions (see Section 4.6 of the FTIR Protocol). A suitable library of reference spectra can be used to measure target analytes in gas samples.

3.8 *Calibration Spectrum*. Infrared spectrum of a compound suitable for characterizing the FTIR instrument configuration (Section 4.5 in the FTIR Protocol).

3.9 *One hundred percent line*. A double beam transmittance spectrum obtained by combining two successive background single beam spectra. Ideally, this line is equal to 100 percent transmittance (or zero absorbance) at every point in the spectrum. The zero absorbance line is used to measure the RMS noise of the system.

3.10 *Background Deviation*. Any deviation (from 100 percent) in the one hundred percent line (or from zero absorbance). Deviations greater than ± 5 percent in any analytical region are unacceptable. Such deviations indicate a change in the instrument throughput relative to the single-beam background.

3.11 *Batch Sampling*. A gas cell is alternately filled and evacuated. A Spectrum of each filled cell (one discreet sample) is collected and saved.

3.12 *Continuous Sampling*. Sample is continuously flowing through a gas cell. Spectra of the flowing sample are collected at regular intervals.

3.13 *Continuous Operation*. In continuous operation an FTIR CEM system, without user intervention, samples flue gas, records spectra of samples, saves the spectra to a disk, analyzes the spectra for the target

analytes, and prints concentrations of target analytes to a computer file. User intervention is permitted for initial set-up of sampling system, initial calibrations, and periodic maintenance.

3.14 *Sampling Time.* In batch sampling—the time required to fill the cell with flue gas. In continuous sampling—the time required to collect the infrared spectrum of the sample gas.

3.15 PPM-Meters. Sample concentration expressed as the concentration-path length product, ppm (molar) concentration multiplied by the path length of the FTIR gas cell. Expressing concentration in these units provides a way to directly compare measurements made using systems with different optical configurations. Another useful expression is (ppm-meters)/K, where K is the absolute temperature of the sample in the gas cell.

3.16 *CEM Measurement Time Constant.* The Time Constant (TC, minutes for one cell volume to flow through the cell) determines the minimum interval for complete removal of an analyte from the FTIR cell. It depends on the sampling rate (R_s in Lpm), the FTIR cell volume (V_{cell} in L) and the chemical and physical properties of an analyte.

$$TC = \frac{V_{cell}}{R_s} \qquad \text{Eq. 1}$$

For example, if the sample flow rate (through the FTIR cell) is 5 Lpm and the cell volume is 7 liters, then TC is equal to 1.4 minutes (0.71 cell volumes per minute). This performance specification defines 5 * TC as the minimum interval between independent samples.

3.17 *Independent Measurement.* Two independent measurements are spectra of two independent samples. Two independent samples are separated by, at least 5 cell volumes. The interval between independent measurements depends on the cell volume and the sample flow rate (through the cell). There is no mixing of gas between two independent samples. Alternatively, estimate the analyte residence time empirically: (1) Fill cell to ambient pressure with a (known analyte concentration) gas standard, (2) measure the spectrum of the gas standard, (3) purge the cell with zero gas at the sampling rate and collect a spectrum every minute until the analyte standard is no longer detected spectroscopically. If the measured time corresponds to less than 5 cell volumes, use 5 * TC as the minimum interval between independent measurements. If the measured time is greater than 5 * TC, then use this time as the minimum interval between independent measurements.

3.18 *Test Condition.* A period of sampling where all process, and sampling conditions, and emissions remain constant and during which a single sampling technique and a single analytical program are used. One Run may include results for more than one test condition. Constant emissions means that the composition of the emissions remains approximately stable so that a single analytical program is suitable for analyzing all of the sample spectra. A greater than two-fold change in analyte or interferant concentrations or the appearance of additional compounds in the emissions, may constitute a new test condition and may require modification of the analytical program.

3.19 *Run.* A single Run consists of spectra (one spectrum each) of at least 10 independent samples over a minimum of one hour. The concentration results from the spectra can be averaged together to give a run average for each analyte measured in the test run.

4.0 Interferences

Several compounds, including water, carbon monoxide, and carbon dioxide, are known interferences in the infrared region in which the FTIR instrument operates. Follow the procedures in the FTIR protocol for subtracting or otherwise dealing with these and other interferences.

5.0 Safety

The procedures required under this performance specification may involve hazardous materials, operations, and equipment. This performance specification may not address all of the safety problems associated with these procedures. It is the responsibility of the user to establish appropriate safety and health practices and determine the applicable regulatory limitations prior to performing these procedures. The CEMS users manual and materials recommended by this performance specification should be consulted for specific precautions to be taken.

6.0 Equipment and Supplies

6.1 Installation of sampling equipment should follow requirements of FTIR test Methods such as references 1 and 3 and the EPA FTIR Protocol (reference 2). Select test points where the gas stream composition is representative of the process emissions. If comparing to a reference method, the probe tips for the FTIR CEM and the RM should be positioned close together using the same sample port if possible.

6.2 FTIR Specifications. The FTIR CEM must be equipped with reference spectra bracketing the range of path length-concentrations (absorbance intensities) to be measured for each analyte. The effective concentration range of the analyzer can be adjusted by changing the path length of the gas cell or by diluting the sample. The optical configuration of the FTIR system must be such that maximum absorbance of any target analyte is no greater than 1.0 and the minimum absorbance of any target analyte is at least 10 times the RMSD noise in the analytical region. For example, if the measured RMSD in an analytical region is equal to 10^{-3}, then the peak analyte absorbance is required to be at least 0.01. Adequate measurement of all of the target analytes may require changing path lengths during a run, conducting separate runs for different analytes, diluting the sample, or using more than one gas cell.

6.3 Data Storage Requirements. The system must have sufficient capacity to store all data collected in one week of routine sampling. Data must be stored to a write-protected medium, such as write-once-read-many (WORM) optical storage medium or to a password protected remote storage location. A back-up copy of all data can be temporarily saved to the computer hard drive. The following items must be stored during testing.

- At least one sample interferogram per sampling Run or one interferogram per hour, whichever is greater. This assumes that no sampling or analytical conditions have changed during the run.
- All sample absorbance spectra (about 12 per hr, 288 per day).
- All background spectra and interferograms (variable, but about 5 per day).
- All CTS spectra and interferograms (at least 2 each 24 hour period).
- Documentation showing a record of resolution, path length, apodization, sampling time, sampling conditions, and test conditions for all sample, CTS, calibration, and background spectra.

Using a resolution of 0.5 cm^{-1}, with analytical range of 3500 cm^{-1}, assuming about 65 Kbytes per spectrum and 130 Kb per interferogram, the storage requirement is about 164 Mb for one week of continuous sampling. Lower spectral resolution requires less storage capacity. All of the above data must be stored for at least two weeks. After two weeks, storage requirements include: (1) all analytical results (calculated concentrations), (2) at least 1 sample spectrum with corresponding background and sample interferograms for each test condition, (3) CTS and calibration spectra with at least one interferogram for CTS and all interferograms for calibrations, (4) a

record of analytical input used to produce results, and (5) all other documentation. These data must be stored according to the requirements of the applicable regulation.

7.0 Reagents and Standards [Reserved]

8.0 Sample Collection, Preservation, Storage, and Transport [Reserved]

9.0 Quality Control

These procedures shall be used for periodic quarterly or semiannual QA/QC checks on the operation of the FTIR CEM. Some procedures test only the analytical program and are not intended as a test of the sampling system.

9.1 Audit Sample. This can serve as a check on both the sampling system and the analytical program.

9.1.1 Sample Requirements. The audit sample can be a mixture or a single component. It must contain target analyte(s) at approximately the expected flue gas concentration(s). If possible, each mixture component concentration should be NIST traceable (± 2 percent accuracy). If a cylinder mixture standard(s) cannot be obtained, then, alternatively, a gas phase standard can be generated from a condensed phase analyte sample. Audit sample contents and concentrations are not revealed to the FTIR CEM operator until after successful completion of procedures in 5.3.2.

9.1.2 Test Procedure. An audit sample is obtained from the Administrator. Spike the audit sample using the analyte spike procedure in Section 11. The audit sample is measured directly by the FTIR system (undiluted) and then spiked into the effluent at a known dilution ratio. Measure a series of spiked and unspiked samples using the same procedures as those used to analyze the stack gas. Analyze the results using Sections 12.1 and 12.2. The measured concentration of each analyte must be within ± 5 percent of the expected concentration (plus the uncertainty), *i.e.,* the calculated correction factor must be within 0.93 and 1.07 for an audit with an analyte uncertainty of ± 2 percent.

9.2 Audit Spectra. Audit spectra can be used to test the analytical program of the FTIR CEM, but provide no test of the sampling system.

9.2.1 Definition and Requirements. Audit spectra are absorbance spectra that; (1) have been well characterized, and (2) contain absorbance bands of target analyte(s) and potential interferants at intensities equivalent to what is expected in the source effluent. Audit spectra are provided by the administrator without identifying information. Methods of preparing Audit spectra include; (1) mathematically adding sample spectra or adding reference and interferant spectra, (2) obtaining sample spectra of mixtures prepared in the laboratory, or (3) they may be sample spectra collected previously at a similar source. In the last case it must be demonstrated that the analytical results are correct and reproducible. A record associated with each Audit spectrum documents its method of preparation. The documentation must be sufficient to enable an independent analyst to reproduce the Audit spectra.

9.2.2 Test Procedure. Audit spectra concentrations are measured using the FTIR CEM analytical program. Analytical results must be within ± 5 percent of the certified audit concentration for each analyte (plus the uncertainty in the audit concentration). If the condition is not met, demonstrate how the audit spectra are unrepresentative of the sample spectra. If the audit spectra are representative, modify the FTIR CEM analytical program until the test requirement is met. Use the new analytical program in subsequent FTIR CEM analyses of effluent samples.

9.3 Submit Spectra For Independent Analysis. This procedure tests only the analytical program and not the FTIR CEM sampling system. The analyst can submit FTIR CEM spectra for independent analysis by EPA. Requirements for submission include; (1) three representative absorbance spectra (and stored interferograms) for each test period to be reviewed, (2) corresponding CTS spectra, (3) corresponding background spectra and interferograms, (4) spectra of associated spiked samples if applicable, and (5) analytical results for these sample spectra. The analyst will also submit documentation of process times and conditions, sampling conditions associated with each spectrum, file names and sampling times, method of analysis and reference spectra used, optical configuration of FTIR CEM including cell path length and temperature, spectral resolution and apodization used for every spectrum. Independent analysis can also be performed on site in conjunction with the FTIR CEM sampling and analysis. Sample spectra are stored on the independent analytical system as they are collected by the FTIR CEM system. The FTIR CEM and the independent analyses are then performed separately. The two analyses will agree to within ±120 percent for each analyte using the procedure in Section 12.3. This assumes both analytical routines have properly accounted for differences in optical path length, resolution, and temperature between the sample spectra and the reference spectra.

10.0 Calibration and Standardization

10.1 Calibration Transfer Standards. For CTS requirements see Section 4.5 of the FTIR Protocol. A well characterized absorbance band in the CTS gas is used to measure the path length and line resolution of the instrument. The CTS measurements made at the beginning of every 24 hour period must agree to within ± 5 percent after correction for differences in pressure.

Verify that the frequency response of the instrument and CTS absorbance intensity are correct by comparing to other CTS spectra or by referring to the literature.

10.2 Analyte Calibration. If EPA library reference spectra are not available, use calibration standards to prepare reference spectra according to Section 6 of the FTIR Protocol. A suitable set of analyte reference data includes spectra of at least 2 independent samples at each of at least 2 different concentrations. The concentrations bracket a range that includes the expected analyte absorbance intensities. The linear fit of the reference analyte band areas must have a fractional calibration uncertainty (FCU in Appendix F of the FTIR Protocol) of no greater than 10 percent. For requirements of analyte standards refer to Section 4.6 of the FTIR Protocol.

10.3 System Calibration. The calibration standard is introduced at a point on the sampling probe. The sampling system is purged with the calibration standard to verify that the absorbance measured in this way is equal to the absorbance in the analyte calibration. Note that the system calibration gives no indication of the ability of the sampling system to transport the target analyte(s) under the test conditions.

10.4 Analyte Spike. The target analyte(s) is spiked at the outlet of the sampling probe, upstream of the particulate filter, and combined with effluent at a ratio of about 1 part spike to 9 parts effluent. The measured absorbance of the spike is compared to the expected absorbance of the spike plus the analyte concentration already in the effluent. This measures sampling system bias, if any, as distinguished from analyzer bias. It is important that spiked sample pass through all of the sampling system components before analysis.

10.5 Signal-to-Noise Ratio (S/N). The measure of S/N in this performance specification is the root-mean-square (RMS) noise level as given in Appendix

C of the FTIR Protocol. The RMS noise level of a contiguous segment of a spectrum is defined as the RMS difference (RMSD) between the n contiguous absorbance values (A_i) which form the segment and the mean value (A_M) of that segment.

$$RMSD = \sqrt{\left(\frac{1}{n}\right)\sum_{i=1}^{n}(A_i - A_m)^2} \qquad \text{Eq. 2}$$

A decrease in the S/N may indicate a loss in optical throughput, or detector or interferometer malfunction.

10.6 Background Deviation. The 100 percent baseline must be between 95 and 105 percent transmittance (absorbance of 0.02 to −0.02) in every analytical region. When background deviation exceeds this range, a new background spectrum must be collected using nitrogen or other zero gas.

10.7 Detector Linearity. Measure the background and CTS at three instrument aperture settings; one at the aperture setting to be used in the testing, and one each at settings one half and twice the test aperture setting. Compare the three CTS spectra. CTS band areas should agree to within the uncertainty of the cylinder standard. If test aperture is the maximum aperture, collect CTS spectrum at maximum aperture, then close the aperture to reduce the IR through-put by half. Collect a second background and CTS at the smaller aperture setting and compare the spectra as above. Instead of changing the aperture neutral density filters can be used to attenuate the infrared beam. Set up the FTIR system as it will be used in the test measurements. Collect a CTS spectrum. Use a neutral density filter to attenuate the infrared beam (either immediately after the source or the interferometer) to approximately ½ its original intensity. Collect a second CTS spectrum. Use another filter to attenuate the infrared beam to approximately ¼ its original intensity. Collect a third background and CTS spectrum. Compare the CTS spectra as above. Another check on linearity is to observe the single beam background in frequency regions where the optical configuration is known to have a zero response. Verify that the detector response is ''flat'' and equal to zero in these regions. If detector response is not linear, decrease aperture, or attenuate the infrared beam. Repeat the linearity check until system passes the requirement.

11.0 Analytical Procedure

11.1 Initial Certification. First, perform the evaluation procedures in Section 6.0 of the FTIR Protocol. The performance of an FTIR CEM can be certified upon installation using EPA Method 301 type validation (40 CFR, Part 63, Appendix A), or by comparison to a reference Method if one exists for the target analyte(s). Details of each procedure are given below. Validation testing is used for initial certification upon installation of a new system. Subsequent performance checks can be performed with more limited analyte spiking. Performance of the analytical program is checked initially, and periodically as required by EPA, by analyzing audit spectra or audit gases.

11.1.1 Validation. Use EPA Method 301 type sampling (reference 4, Section 5.3 of Method 301) to validate the FTIR CEM for measuring the target analytes. The analyte spike procedure is as follows: (1) a known concentration of analyte is mixed with a known concentration of a non-reactive tracer gas, (2) the undiluted spike gas is sent directly to the FTIR cell and a spectrum of this sample is collected, (3) pre-heat the spiked gas to at least the sample line temperature, (4) introduce spike gas at the back of the sample probe upstream of the particulate filter, (5) spiked effluent is carried through all sampling components downstream of the probe, (6) spike at a ratio of roughly 1 part spike to 9 parts flue gas (or more dilute), (7) the spike-to-flue gas ratio is estimated by comparing the spike flow to the total sample flow, and (8) the spike ratio is verified by comparing the tracer concentration in spiked flue gas to the tracer concentration in undiluted spike gas. The analyte flue gas concentration is unimportant as long as the spiked component can be measured and the sample matrix (including interferences) is similar to its composition under test conditions. Validation can be performed using a single FTIR CEM analyzing sample spectra collected sequentially. Since flue gas analyte (unspiked) concentrations can vary, it is recommended that two separate sampling lines (and pumps) are used; one line to carry unspiked flue gas and the other line to carry spiked flue gas. Even with two sampling lines the variation in unspiked concentration may be fast compared to the interval between consecutive measurements. Alternatively, two FTIR CEMs can be operated side-by-side, one measuring spiked sample, the other unspiked sample. In this arrangement spiked and unspiked measurements can be synchronized to minimize the affect of temporal variation in the unspiked analyte concentration. In either sampling arrangement, the interval between measured concentrations used in the statistical analysis should be, at least, 5 cell volumes (5 * TC in equation 1). A validation run consists of, at least, 24 independent analytical results, 12 spiked and 12 unspiked samples. See Section 3.17 for definition of an ''independent'' analytical result. The results are analyzed using Sections 12.1 and 12.2 to determine if the measurements passed the validation requirements. Several analytes can be spiked and measured in the same sampling run, but a separate statistical analysis is performed for each analyte. In lieu of 24 independent measurements, averaged results can be used in the statistical analysis. In this procedure, a series of consecutive spiked measurements are combined over a sampling period to give a single average result. The related unspiked measurements are averaged in the same way. The minimum 12 spiked and 12 unspiked result averages are obtained by averaging measurements over subsequent sampling periods of equal duration. The averaged results are grouped together and statistically analyzed using Section 12.2.

11.1.1.1 Validation with a Single Analyzer and Sampling Line. If one sampling line is used, connect the sampling system components and purge the entire sampling system and cell with at least 10 cell volumes of sample gas. Begin sampling by collecting spectra of 2 independent unspiked samples. Introduce the spike gas into the back of the probe, upstream of the particulate filter. Allow 10 cell volumes of spiked flue gas to purge the cell and sampling system. Collect spectra of 2 independent spiked samples. Turn off the spike flow and allow 10 cell volumes of unspiked flue gas to purge the FTIR cell and sampling system. Repeat this procedure 6 times until the 24 samples are collected. Spiked and unspiked samples can also be measured in groups of 4 instead of in pairs. Analyze the results using Sections 12.1 and 12.2. If the statistical analysis passes the validation criteria, then the validation is completed. If the results do not pass the validation, the cause may be that temporal variations in the analyte sample gas concentration are fast relative to the interval between measurements. The difficulty may be avoided by: (1) Averaging the measurements over long sampling periods and using the averaged results in the statistical analysis, (2) modifying the sampling system to reduce TC by, for example, using a smaller volume cell or increasing the sample flow rate, (3) using two sample lines (4) use two analyzers to perform synchronized

measurements. This performance specification permits modifications in the sampling system to minimize TC if the other requirements of the validation sampling procedure are met.

11.1.1.2 Validation With a Single Analyzer and Two Sampling Lines. An alternative sampling procedure uses two separate sample lines, one carrying spiked flue gas, the other carrying unspiked gas. A valve in the gas distribution manifold allows the operator to choose either sample. A short heated line connects the FTIR cell to the 3-way valve in the manifold. Both sampling lines are continuously purged. Each sample line has a rotameter and a bypass vent line after the rotameter, immediately upstream of the valve, so that the spike and unspiked sample flows can each be continuously monitored. Begin sampling by collecting spectra of 2 independent unspiked samples. Turn the sampling valve to close off the unspiked gas flow and allow the spiked flue gas to enter the FTIR cell. Isolate and evacuate the cell and fill with the spiked sample to ambient pressure. (While the evacuated cell is filling, prevent air leaks into the cell by making sure that the spike sample rotameter always indicates that a portion of the flow is directed out the by-pass vent.) Open the cell outlet valve to allow spiked sample to continuously flow through the cell. Measure spectra of 2 independent spiked samples. Repeat this procedure until at least 24 samples are collected.

11.1.1.3 Synchronized Measurements With Two Analyzers. Use two FTIR analyzers, each with its own cell, to perform synchronized spiked and unspiked measurements. If possible, use a similar optical configuration for both systems. The optical configurations are compared by measuring the same CTS gas with both analyzers. Each FTIR system uses its own sampling system including a separate sampling probe and sampling line. A common gas distribution manifold can be used if the samples are never mixed. One sampling system and analyzer measures spiked effluent. The other sampling system and analyzer measures unspiked flue gas. The two systems are synchronized so that each measures spectra at approximately the same times. The sample flow rates are also synchronized so that both sampling rates are approximately the same ($TC_1 \sim TC_2$ in equation 1). Start both systems at the same time. Collect spectra of at least 12 independent samples with each (spiked and unspiked) system to obtain the minimum 24 measurements. Analyze the analytical results using Sections 12.1 and 12.2. Run averages can be used in the statistical analysis instead of individual measurements.

11.1.1.4 Compare to a Reference Method (RM). Obtain EPA approval that the method qualifies as an RM for the analyte(s) and the source to be tested. Follow the published procedures for the RM in preparing and setting up equipment and sampling system, performing measurements, and reporting results. Since FTIR CEMS have multicomponent capability, it is possible to perform more than one RM simultaneously, one for each target analyte. Conduct at least 9 runs where the FTIR CEM and the RM are sampling simultaneously. Each Run is at least 30 minutes long and consists of spectra of at least 5 independent FTIR CEM samples and the corresponding RM measurements. If more than 9 runs are conducted, the analyst may eliminate up to 3 runs from the analysis if at least 9 runs are used.

11.1.1.4.1 RMs Using Integrated Sampling. Perform the RM and FTIR CEM sampling simultaneously. The FTIR CEM can measure spectra as frequently as the analyst chooses (and should obtain measurements as frequently as possible) provided that the measurements include spectra of at least 5 independent measurements every 30 minutes. Concentration results from all of the FTIR CEM spectra within a run may be averaged for use in the statistical comparison even if all of the measurements are not independent. When averaging the FTIR CEM concentrations within a run, it is permitted to exclude some measurements from the average provided the minimum of 5 independent measurements every 30 minutes are included: The Run average of the FTIR CEM measurements depends on both the sample flow rate and the measurement frequency (MF). The run average of the RM using the integrated sampling method depends primarily on its sampling rate. If the target analyte concentration fluctuates significantly, the contribution to the run average of a large fluctuation depends on the sampling rate and measurement frequency, and on the duration and magnitude of the fluctuation. It is, therefore, important to carefully select the sampling rate for both the FTIR CEM and the RM and the measurement frequency for the FTIR CEM. The minimum of 9 run averages can be compared according to the relative accuracy test procedure in Performance Specification 2 for SO_2 and NO_x CEMs (40 CFR, Part 60, App. B).

11.1.1.4.2 RMs Using a Grab Sampling Technique. Synchronize the RM and FTIR CEM measurements as closely as possible. For a grab sampling RM record the volume collected and the exact sampling period for each sample. Synchronize the FTIR CEM so that the FTIR measures a spectrum of a similar cell volume at the same time as the RM grab sample was collected. Measure at least 5 independent samples with both the FTIR CEM and the RM for each of the minimum 9 Runs. Compare the Run concentration averages by using the relative accuracy analysis procedure in 40 CFR, Part 60, App. B.

11.1.1.4.3 Continuous Emission Monitors (CEMs) as RMs. If the RM is a CEM, synchronize the sampling flow rates of the RM and the FTIR CEM. Each run is at least 1-hour long and consists of at least 10 FTIR CEM measurements and the corresponding 10 RM measurements (or averages). For the statistical comparison use the relative accuracy analysis procedure in 40 CFR, Part 60, App. B. If the RM time constant is <½ the FTIR CEM time constant, brief fluctuations in analyte concentrations which are not adequately measured with the slower FTIR CEM time constant can be excluded from the run average along with the corresponding RM measurements. However, the FTIR CEM run average must still include at least 10 measurements over a 1-hr period.

12.0 Calculations and Data Analysis

12.1 Spike Dilution Ratio, Expected Concentration. The Method 301 bias is calculated as follows.

$$B = S_m - M_m - CS \qquad \text{Eq. 3}$$

Where:

B = Bias at the spike level

S_m = Mean of the observed spiked sample concentrations

M_m = Mean of the observed unspiked sample concentrations

CS = Expected value of the spiked concentration.

The CS is determined by comparing the SF_6 tracer concentration in undiluted spike gas to the SF_6 tracer concentrations in the spiked samples;

$$DF = \frac{[SF_6]_{direct}}{[SF_6]_{spiked}} \qquad \text{Eq. 4}$$

The expected concentration (CS) is the measured concentration of the analyte in undiluted spike gas divided by the dilution factor

$$CS = \frac{[anal]_{dir}}{DF} \qquad \text{Eq. 5}$$

Where:

$[anal]_{dir}$=The analyte concentration in undiluted spike gas measured directly by filling the FTIR cell with the spike gas.

If the bias is statistically significant (Section 12.2), Method 301 requires that a correction factor, CF, be multiplied by the analytical results, and that $0.7 \leq CF \leq 1.3$.

$$CF = \frac{1}{1 + \frac{B}{CS}} \qquad \text{Eq. 6}$$

12.2 Statistical Analysis of Validation Measurements. Arrange the independent measurements (or measurement averages) as in Table 1. More than 12 pairs of measurements can be analyzed. The statistical analysis follows EPA Method 301, Section 6.3. Section 12.1 of this performance specification shows the calculations for the bias, expected spike concentration, and correction factor. This Section shows the determination of the statistical significance of the bias. Determine the statistical significance of the bias at the 95 percent confidence level by calculating the t-value for the set of measurements. First, calculate the differences, d_i, for each pair of spiked and each pair of unspiked measurements. Then calculate the standard deviation of the spiked pairs of measurements.

$$SD_s = \sqrt{\frac{\sum d_i 2}{2n}} \qquad \text{Eq. 7}$$

Where:

d_i = The differences between pairs of spiked measurements.

SD_s = The standard deviation in the d_i values.

n = The number of spiked pairs, 2n=12 for the minimum of 12 spiked and 12 unspiked measurements.

Calculate the relative standard deviation, RSD, using SD_s and the mean of the spiked concentrations, S_m. The RSD must be ≤50%.

$$RSD = \left(\frac{SD}{S_m}\right) \qquad \text{Eq. 8}$$

Repeat the calculations in equations 7 and 8 to determine SD_u and RSD, respectively, for the unspiked samples. Calculate the standard deviation of the mean using SD_s and SD_u from equation 7.

$$SD = \sqrt{SD_s 2 + SD_u 2} \qquad \text{Eq. 9}$$

The t-statistic is calculated as follows to test the bias for statistical significance;

$$t = \frac{|B|}{SDM} \qquad \text{Eq. 10}$$

where the bias, B, and the correction factor, CF, are given in Section 12.1. For 11 degrees of freedom, and a one-tailed distribution, Method 301 requires that t ≤2.201. If the t-statistic indicates the bias is statistically significant, then analytical measurements must be multiplied by the correction factor. There is no limitation on the number of measurements, but there must be at least 12 independent spiked and 12 independent unspiked measurements. Refer to the t-distribution (Table 2) at the 95 percent confidence level and appropriate degrees of freedom for the critical t-value.

16.0 References

1. Method 318, 40 CFR, Part 63, Appendix A (Draft), ''Measurement of Gaseous Formaldehyde, Phenol and Methanol Emissions by FTIR Spectroscopy,'' EPA Contract No. 68D20163, Work Assignment 2–18, February, 1995.

2. ''EPA Protocol for the Use of Extractive Fourier Transform Infrared (FTIR) Spectrometry in Analyses of Gaseous Emissions from Stationary Industrial Sources,'' February, 1995.

3. ''Measurement of Gaseous Organic and Inorganic Emissions by Extractive FTIR Spectroscopy,'' EPA Contract No. 68–D2–0165, Work Assignment 3–08.

4. ''Method 301—Field Validation of Pollutant Measurement Methods from Various Waste Media,'' 40 CFR 63, App A.

17.0 Tables, Diagrams, Flowcharts, and Validation Data

TABLE 1.—ARRANGEMENT OF VALIDATION MEASUREMENTS FOR STATISTICAL ANALYSIS

Measurement (or average)	Time	Spiked (ppm)	d_i spiked	Unspiked (ppm)	d_i unspiked
1		S_1		U_1	
2		S_2	$S_2 - S_1$	U_2	$U_2 - U_1$
3		S_3		U_3	
4		S_4	$S_4 - S_3$	U_4	$U_4 - U_3$
5		S_5		U_5	
6		S_6	$S_6 - S_5$	U_6	$U_6 - U_5$
7		S_7		U_7	
8		S_8	$S_8 - S_7$	U_8	$U_8 - U_7$
9		S_9		U_9	
10		S_{10}	$S_{10} - S_9$	U_{10}	$U_{10} - U_9$
11		S_{11}		U_{11}	
12		S_{12}	$S_{12} - S_{11}$	U_{12}	$U_{12} - U_{11}$
Average –>		S_m		M_m	

TABLE 2.—T=VALUES

n – 1[a]	t – value	n – 1[a]	t – value	n – 1[a]	t – value	n – 1[a]	t – value
11	2.201	17	2.110	23	2.069	29	2.045
12	2.179	18	2.101	24	2.064	30	2.042
13	2.160	19	2.093	25	2.060	40	2.021
14	2.145	20	2.086	26	2.056	60	2.000
15	2.131	21	2.080	27	2.052	120	1.980
16	2.120	22	2.074	28	2.048	8	1.960

[a] n is the number of independent pairs of measurements (a pair consists of one spiked and its corresponding unspiked measurement). Either discreet (independent) measurements in a single run, or run averages can be used.

* * * * *

PART 61—NATIONAL EMISSION STANDARDS FOR HAZARDOUS AIR POLLUTANTS

1. The authority citation for Part 61 continues to read as follows: 42 U.S.C. 7401, 7412, 7413, 7414, 7416, 7601, and 7602.

2. In § 61.18, paragraph (a) is revised to read as follows:

§ 61.18 Incorporation by reference.

* * * * *

(a) The following materials are available for purchase from at least one of the following addresses: American Society for Testing and Materials (ASTM), 1916 Race Street, Philadelphia, PA 19103; or University Microfilms International, 300 North Zeeb Road, Ann Arbor, MI 48106.

(1) ASTM D737–75, Standard Test Method for Air Permeability of Textile Fabrics, incorporation by reference (IBR) approved January 27, 1983 for § 61.23(a).

(2) ASTM D835–85, Standard Specification for Refined Benzene-485, IBR approved September 14, 1989 for § 61.270(a).

(3) ASTM D836–84, Standard Specification for Industrial Grade Benzene, IBR approved September 14, 1989 for § 61.270(a).

(4) ASTM D1193–77, 91, Standard Specification for Reagent Water, IBR approved for Appendix B: Method 101, Section 7.1.1; Method 101A, Section 7.1.1; and Method 104, Section 7.1; Method 108, Section 7.1.3; Method 108A, Section 7.1.1; Method 108B, Section 7.1.1; Method 108C, Section 7.1.1; and Method 111, Section 7.3.

(5) ASTM D2267–68, 78, 88, Aromatics in Light Naphthas and Aviation Gasoline by Gas Chromatography, IBR approved September 30, 1986, for § 61.67(h)(1).

(6) ASTM D2359–85a, 93, Standard Specification for Refined Benzene-535, IBR approved September 14, 1989 for § 61.270(a).

(7) ASTM D2382–76, 88, Heat of Combustion of Hydrocarbon Fuels by Bomb Calorimeter (High-Precision Method), IBR approved June 6, 1984 for § 61.245(e)(3).

(8) ASTM D2504–67, 77, 88, 93, Noncondensable Gases in C_3 and Lighter Hydrocarbon Products by Gas

Chromatography, IBR approved June 6, 1984 for § 61.245(e)(3).

(9) ASTM D2986–71, 78, 95a, Standard Method for Evaluation of Air, Assay Media by the Monodisperse DOP (Dioctyl Phthalate) Smoke Test, IBR approved for Appendix B: Method 103, Section 6.1.3.

(10) ASTM D4420–94, Standard Test Method for Determination of Aromatics in Finished Gasoline by Gas Chromatography, IBR approved for § 61.67(h)(1).

(11) ASTM D4734–87, 96, Standard Specification for Refined Benzene-545, IBR approved September 14, 1989 for § 61.270(a).

(12) ASTM D4809–95, Standard Test Method for Heat of Combustion of Liquid Hydrocarbon Fuels by Bomb Calorimeter (Precision Method), IBR approved for § 61.245(e)(3).

(13) ASTM E50–82, 86, 90 (Reapproved 1995), Standard Practices for Apparatus Reagents, and Safety Precautions for Chemical Analysis of Metals, IBR approved for Appendix B: Method 108C, Section 6.1.4.

* * * * *

§ 61.20 [Amended]

3. Amend § 61.20 as follows:

a. Paragraph (a) is amended by revising the words ''100,000 tons'' to read ''90,720 megagrams (Mg) (100,000 tons).''

b. Paragraph (b) is amended by revising the words ''10,000 tons'' to read ''9,072 Mg (10,000 tons).''

c. Paragraph (b) is amended by revising the words ''100,000 tons'' to read ''90,720 Mg (100,000 tons).''

61.21 [Amended]

4. In § 61.21(b), the words ''Effective dose equivalent means the sum of the products of absorbed dose and appropriate factors to account for differences in biological effectiveness due to the quality of radiation and its distribution in the body of reference man'' are revised to read ''Effective dose equivalent means the sum of the products of the absorbed dose and appropriate effectiveness factors. These factors account for differences in biological effectiveness due to the quality of radiation and its distribution in the body of reference man.''

§ 61.23 [Amended]

5. Amend § 61.23 as follows:

a. In paragraph (a), the first sentence is amended by revising the abbreviation ''EPA'' to read ''U.S. Environmental Protection Agency (EPA).''

b. In paragraph (a), the second sentence is amended by revising the word ''Appendix'' to read ''appendix.''

§ 61.24 [Amended]

6. Amend § 61.24 as follows:

a. In paragraph (a), the first sentence is amended by revising the words ''used in making the calculation'' to read ''used in making the calculations.''

b. In paragraph (a), the second sentence is amended by revising the words ''Such report shall'' to read ''This report shall.''

§ 61.30 [Amended]

7. In § 61.30, paragraph (a) is amended by revising the words ''Extraction plans'' to read ''Extraction plants.''

§ 61.32 [Amended]

8. Amend § 61.32 as follows:

a. Paragraph (a) is amended by revising the words ''10 grams'' to read ''10 grams (0.022 lb).''

b. Paragraphs (b) and (b)(1)(i) are amended by revising the words ''0.01 $\mu g/m^3$'' to read ''0.01 $\mu g/m^3$ (4.37×10^{-6} gr/ft^3)'' wherever they occur.

§ 61.42 [Amended]

9. Amend § 61.42 as follows:

a. Paragraph (a) is amended by revising the words ''75 microgram minutes per cubic meter of air'' to read ''75 microgram minutes per cubic meter (μg-min/m^3) (4.68 pound minutes per cubic foot (lb-min/ft^3)) of air.''

b. Paragraph (b) is amended by revising the words ''2 grams per hour'' to read ''2.0 g/hr (0.0044 lb/hr).''

c. Paragraph (b) is amended by revising the words ''10 grams per day'' to read ''10 g/day (0.022 lb/day).''

§ 61.52 [Amended]

10. Amend § 61.52 as follows:

a. Paragraph (a) is amended by revising the words ''2300 grams'' to read ''2.3 kg (5.1 lb).''

b. Paragraph (b) is amended by revising the words ''3200 grams'' to read ''3.2 kg (7.1 lb).''

§ 61.53 [Amended]

11. In § 61.53, paragraph (c) is amended by revising the words ''1,300 gms/day'' to read ''1.3 kg/day (2.9 lb/day).''

§ 61.55 [Amended]

12. Amend § 61.55 as follows:

a. In paragraph (a), the second sentence is amended by revising the words ''1,600 g'' to read ''1.6 kg (3.5 lb).''

b. Paragraph (b)(1) is amended by revising the words ''Reference Method'' to read ''Method'' wherever they occur.

c. Paragraph (c)(4) is amended by revising the words ''established in 2'' to read ''established in paragraph (c)(2) of this section.''

§ 61.61 [Amended]

13. Amend § 61.61 as follows:

a. Paragraph (c) is amended by revising the words ''polyvinyl chloride plant'' to read ''polyvinyl chloride (PVC) plant.''

b. In paragraph (l), the first sentence is amended by revising the words ''a least'' to read ''at least.''

c. Paragraph (w)(3) is amended by revising the words ''Test Method 21'' to read ''Method 21.''

§ 61.62 [Amended]

14. In § 61.62, paragraph (b) is amended by revising the words ''0.2 g/kg (0.0002 lb/lb)'' to read ''0.2 g/kg (0.4 lb/ton).''

§ 61.64 [Amended]

15. Amend § 61.64 as follows:

a. In paragraph (a)(2), the first sentence is amended by revising the words ''0.02 g vinyl chloride/kg (0.00002 lb vinyl chloride/lb)'' to read ''0.02 g vinyl chloride/kg (0.04 lb vinyl chloride/ton).''

b. Paragraph (e)(2)(i) is amended by revising the words ''2 g/kg (0.002 lb/lb)'' to read ''2 g/kg (4 lb/ton).''

c. Paragraph (e)(2)(ii) is amended by revising the words ''0.4 g/kg (0.0004 lb/lb)'' to read ''0.4 g/kg (0.8 lb/ton).''

d. Paragraph (f)(2)(i) is amended by revising the words ''2.02 g/kg (0.00202 lb/lb)'' to read ''2.02 g/kg (4.04 lb/ton).''

e. Paragraph (f)(2)(ii) is amended by revising the words ''0.42 g/kg (0.00042 lb/lb)'' to read ''0.42 g/kg (0.84 lb/ton).''

§ 61.65 [Amended]

16. Amend § 61.65 as follows:

a. In paragraph (a), the first sentence is amended by revising the words *''Relief valve discharge''* to read *''Relief valve discharge (RVD).''*

b. Paragraph (b)(8)(i)(D)(*1*) is amended by revising the words ''sections 5.2.1. and 5.2.2. of Test Method 106 and in accordance with section 7.1 of Test Method 106'' to read ''sections 7.2.1 and 7.2.2 of Method 106 and in accordance with section 10.1 of Method 106.''

c. In paragraph (b)(8)(i)(D)(*2*), the fourth sentence is amended by revising the words ''maximum self life'' to read ''maximum shelf life.''

d. In paragraph (b)(8)(i)(D)(*2*), the fifth sentence is amended by revising the words ''section 7.3 of Test Method 106. The requirements in section 5.2.3.1. and 5.2.3.2. of Test Method 106'' to read ''Sections 8.1 and 9.2 of Method 106. The requirements in Sections 7.2.3.1 and 7.2.3.2 of Method 106.''

e. In paragraph (c), the second sentence is amended by revising the

words ''Test Method'' to read ''Method 106.''

17. Amend § 61.67 by:

a. Revising § 61.67(g).

b. In paragraph (h)(1) by revising ''ASTM Method D–2267'' to read ''ASTM D2267–68, 78, or 88 or D4420–94.''

The revisions read as follows:

§ 61.67 Emission tests.

* * * * *

(g) Unless otherwise specified, the owner or operator shall use the test methods in Appendix B to this part for each test as required by paragraphs (g)(1), (g)(2), (g)(3), (g)(4), and (g)(5) of this section, unless an alternative method has been approved by the Administrator. If the Administrator finds reasonable grounds to dispute the results obtained by an alternative method, he may require the use of a reference method. If the results of the reference and alternative methods do not agree, the results obtained by the reference method prevail, and the Administrator may notify the owner or operator that approval of the method previously considered to be alternative is withdrawn. Whenever Method 107 is specified, and the conditions in Section 1.2, ''Applicability'' of Method 107A are met, Method 107A may be used.

(1) Method 106 is to be used to determine the vinyl chloride emissions from any source for which an emission limit is prescribed in § 61.62(a) or (b), § 61.63(a), or § 61.64(a)(1), (b), (c), or (d), or from any control system to which reactor emissions are required to be ducted in § 61.64(a)(2) or to which fugitive emissions are required to be ducted in § 61.65(b)(1)(ii), (b)(2), (b)(5), (b)(6)(ii), or (b)(9)(ii).

(i) For each run, one sample is to be collected. The sampling site is to be at least two stack or duct diameters downstream and one half diameter upstream from any flow disturbance such as a bend, expansion, contraction, or visible flame. For a rectangular cross section, an equivalent diameter is to be determined from the following equation:

Equivalent diameter = 2(length)(width)/(length + width)

The sampling point in the duct is to be at the centroid of the cross section. The sample is to be extracted at a rate proportional to the gas velocity at the sampling point. The sample is to contain a minimum volume of 50 liters (1.8 ft^3) corrected to standard conditions and is to be taken over a period as close to 1 hour as practicable.

(ii) Each emission test is to consist of three runs. For the purpose of determining emissions, the average of results of all runs is to apply. The average is to be computed on a time weighted basis.

(iii) For gas streams containing more that 10 percent oxygen, the concentration of vinyl chloride as determined by Method 106 is to be corrected to 10 percent oxygen (dry basis) for determination of emissions by using the following equation:

$$C_{b(corrected)} = C_b\,(10.9)/(20.9 - \text{percent } O_2)$$

Where:

$C_{b(corrected)}$ = The concentration of vinyl chloride in the exhaust gases, corrected to 10 percent oxygen.

C_b = The concentration of vinyl chloride as measured by Method 106.

20.9 = Percent oxygen in the ambient air at standard conditions.

10.9 = Percent oxygen in the ambient air at standard conditions, minus the 10.0 percent oxygen to which the correction is being made.

Percent O_2 = Percent oxygen in the exhaust gas as measured by Method 3 of Appendix A of Part 60 of this chapter.

(iv) For those emission sources where the emission limit is prescribed in terms of mass rather than concentration, mass emissions are to be determined using the following equation:

$$C_{BX} = \frac{C_b D_{VC} Q K \left(10^{-6}\right)}{Z}$$

Where:

C_{BX} = Vinyl chloride emissions, g/kg (lb/lb) product.

C_b = Concentration of vinyl chloride as measured by Test Method 106, ppmv.

D_{VC} = Density of vinyl chloride at standard conditions, 2.60 kg/m^3 (0.162 lb/ft^3).

Q = Volumetric flow rate as determined by Method 2 of Appendix A to Part 60 of this chapter, m^3/hr (ft^3/hr).

K = Unit conversion factor, 1,000 g/kg (1 lb/lb).

10^{-6} = Conversion factor for ppm.

Z = Production rate, kg/hr (lb/hr).

(2) Method 107 or Method 601 (incorporated by reference as specified in § 61.18) is to be used to determine the concentration of vinyl chloride in each inprocess wastewater stream for which an emission limit is prescribed in § 61.65(b)(9)(i).

(3) When a stripping operation is used to attain the emission limits in § 61.64(e) and (f), emissions are to be determined using Method 107 as follows:

(i) The number of strippers (or reactors used as strippers) and samples and the types and grades of resin to be sampled are to be determined by the Administrator for each individual plant at the time of the test based on the plant's operation.

(ii) Each sample is to be taken immediately following the stripping operation.

(iii) The corresponding quantity of material processed by each stripper (or reactor used as a stripper) is to be determined on a dry solids basis and by a method submitted to and approved by the Administrator.

(iv) At the prior request of the Administrator, the owner or operator shall provide duplicates of the samples required in paragraph (g)(3)(i) of this section.

(4) Where control technology other than or in addition to a stripping operation is used to attain the emission limit in § 61.64(e), emissions are to be determined as follows:

(i) Method 106 is to be used to determine atmospheric emissions from all of the process equipment simultaneously. The requirements of paragraph (g)(1) of this section are to be met.

(ii) Method 107 is to be used to determine the concentration of vinyl chloride in each inprocess wastewater stream subject to the emission limit prescribed in § 61.64(e). Vinyl chloride mass emissions are to be determined using the following equation:

$$C_{BX} = \frac{C_{rvc} Q_{water} D_{water} Q K \left(10^{-6}\right)}{Z}$$

Where:

C_{BX} = Vinyl chloride emissions, g/kg (lb/lb) product in each inprocess wastewater stream.

C_{rvc} = Concentration of vinyl chloride in wastewater, as measured by Method 107, ppmw.

D_{water} = Density of wastewater, 1.0 kg/m^3 (0.0624 lb/ft^3).

Q_{water} = Wastewater flow rate, determined in accordance with a method which has been submitted to and approved by the Administrator, m^3/hr (ft^3/hr).

K = Unit conversion factor, 1,000 g/kg (1 lb/lb).

10^{-6} = Conversion factor for ppm.

Z = Production rate, kg/hr (lb/hr), determined in accordance with a method which has been submitted to and approved by the Administrator.

(5) The reactor opening loss for which an emission limit is prescribed in § 61.64(a)(2) is to be determined. The number of reactors for which the determination is to be made is to be specified by the Administrator for each individual plant at the time of the

determination based on the plant's operation.

(i) Except as provided in paragraph (g)(5)(ii) of this section, the reactor opening loss is to be determined using the following equation:

$$C_{BX} = C_b \frac{V_R D_{VC} Q K \left(10^{-6}\right)}{Z}$$

Where:

C_{BX} = Vinyl chloride emissions, g/kg (lb/lb) product.

C_b = Concentration of vinyl chloride, in ppmv, as determined by Method 106 or a portable hydrocarbon detector which measures hydrocarbons with a sensitivity of at least 10 ppmv.

V_R = Capacity of the reactor, m^3 (ft^3).

D_{VC} = Density of vinyl chloride at standard conditions, 2.60 kg/m^3 (0.162 lb/ft^3).

K = Unit conversion factor, 1,000 g/kg (1 lb/lb).

10^{-6} = Conversion factor for ppm.

Z = Production rate, kg/hr (lb/hr).

(A) If Method 106 is used to determine the concentration of vinyl chloride (C_b), the sample is to be withdrawn at a constant rate with a probe of sufficient length to reach the vessel bottom from the manhole. Samples are to be taken for 5 minutes within 6 inches of the vessel bottom, 5 minutes near the vessel center, and 5 minutes near the vessel top.

(B) If a portable hydrocarbon detector is used to determine the concentration of vinyl chloride (C_b), a probe of sufficient length to reach the vessel bottom from the manhole is to be used to make the measurements. One measurement will be made within 6 inches of the vessel bottom, one near the vessel center and one near the vessel top. Measurements are to be made at each location until the reading is stabilized. All hydrocarbons measured are to be assumed to be vinyl chloride.

(C) The production rate of polyvinyl chloride (Z), which is the product of the average batch weight and the number of batches produced since the reactor was last opened to the atmosphere, is to be determined by a method submitted to and approved by the Administrator.

(ii) A calculation based on the number of evacuations, the vacuum involved, and the volume of gas in the reactor is hereby approved by the Administrator as an alternative method for determining reactor opening loss for postpolymerization reactors in the manufacture of bulk resins. Calculation methods based on techniques other than repeated evacuation of the reactor may be approved by the Administrator for determining reactor opening loss for postpolymerization reactors in the manufacture of bulk resins.

(6) For a reactor that is used as a stripper, the emissions of vinyl chloride from reactor opening loss and all sources following the reactor used as a stripper for which an emission limit is prescribed in § 61.64(f) are to be determined. The number of reactors for which the determination is to be made is to be specified by the Administrator for each individual plant at the time of the determination based on the plant's operation.

(i) For each batch stripped in the reactor, the following measurements are to be made:

(A) The concentration of vinyl chloride in resin after stripping, measured according to paragraph (g)(3) of this section;

(B) The reactor vacuum at end of strip from plant instrument; and

(C) The reactor temperature at the end of strip from plant instrument.

(ii) For each batch stripped in the reactor, the following information is to be determined:

(A) The vapor pressure of water in the reactor at the end of strip from the following table:

METRIC UNITS

Reactor vapor temperature (°C)	H_2O vapor pressure (mm Hg)	Reactor vapor temperature (°C)	H_2O vapor pressure (mm Hg)	Reactor vapor temperature (°C)	H_2O vapor pressure (mm Hg)
40	55.3	62	163.8	84	416.8
41	58.3	63	171.4	85	433.6
42	61.5	64	179.3	86	450.9
43	64.8	65	187.5	87	468.7
44	68.3	66	196.1	88	487.1
45	71.9	67	205.0	89	506.1
46	75.6	68	214.2	90	525.8
47	79.6	69	223.7	91	546.0
48	83.7	70	233.7	92	567.0
49	88.0	71	243.9	93	588.6
50	92.5	72	254.6	94	610.9
51	97.2	73	265.7	95	633.9
52	102.1	74	277.2	96	657.6
53	107.2	75	289.1	97	682.1
54	112.5	76	301.4	98	707.3
55	118.0	77	314.1	99	733.2
56	123.8	78	327.3	100	760.0
57	129.8	79	341.0		
58	136.1	80	355.1		
59	142.6	81	369.7		
60	149.4	82	384.9		
61	156.4	83	400.6		

ENGLISH UNITS

Reactor vapor temperature (°F)	H_2O vapor pressure (psia)	Reactor vapor temperature (°F)	H_2O vapor pressure (psia)	Reactor vapor temperature (°F)	H_2O vapor pressure (psia)
104	1.07	144	3.167	183	8.060
106	1.13	145	3.314	185	8.384
108	1.19	147	3.467	187	8.719
109	1.25	149	3.626	189	9.063
111	1.32	151	3.792	190	9.419
113	1.39	153	3.964	192	9.786
115	1.46	154	4.142	194	10.17
117	1.54	156	4.326	196	10.56
118	1.62	158	4.519	198	10.96
120	1.70	160	4.716	199	11.38
122	1.79	162	4.923	201	11.81
124	1.88	163	5.138	203	12.26
126	1.974	165	5.360	205	12.72
127	2.073	167	5.590	207	13.19
129	2.175	169	5.828	208	13.68
131	2.282	170	6.074	210	14.18
133	2.394	172	6.329	212	14.70
135	2.510	174	6.594		
136	2.632	176	6.866		
138	2.757	178	7.149		
140	2.889	180	7.443		
142	3.024	181	7.746		

(B) The partial pressure of vinyl chloride in reactor at end of strip from the following equation:

$$PP_{VC} = P_{ATM} - P_{RV} - P_W$$

Where:

PP_{VC} = Partial pressure of vinyl chloride, mm Hg (psia)
P_{ATM} = Atmospheric pressure at 0 °C (32 °F), 760 mm Hg (14.7 psia)
P_{RV} = Absolute pressure of reactor vacuum, mm Hg (psia)
P_W = Vapor pressure of water, mm Hg (psia)

(C) The reactor vapor space volume at the end of the strip from the following equation:

$$V_{RVS} = V_R - V_W - \frac{W_{PVC}}{D_{PVC}}$$

Where:

V_{RVS} = Reactor vapor space volume, m^3 (ft^3)
V_R = Reactor capacity, m^3 (ft^3)
V_W = Volume of water in reactor from recipe, m^3 (ft^3)
W_{PVC} = Dry weight of polyvinyl chloride in reactor from recipe, kg (lb)
D_{PVC} = Typical density of polyvinyl chloride, 1,400 kg/m^3 (87.4 lb/ft^3)

(iii) For each batch stripped in the reactor, the combined reactor opening loss and emissions from all sources following the reactor used as a stripper is to be determined using the following equation:

$$C_{BX} = K_1 \left(PPM_{VC}\right) + \frac{\left(PP_{VC}\right)\left(V_{RVS}\right)\left(R_{VC}\right)}{\left(M_{VC}\right)\left(T_R + K_T\right)}$$

Where:

C_{BX} = Vinyl chloride emissions, g/kg (lb/lb) product.
PPM_{VC} = Concentration of vinyl chloride in resin after stripping, ppmw
K_1 = Conversion factor from ppmw to units of emission standard, 0.001 (metric units) = 0.002 (English units)
PP_{VC} = Partial pressure of vinyl chloride determined according to paragraph (g)(6)(ii)(B) of this section, mm Hg (psia)
V_{RVS} = Reactor vapor space volume determined according to paragraph (g)(6)(ii)(C) of this section, m^3 (ft^3)
R_{VC} = Ideal gas constant for vinyl chloride, 1,002 g-°K/(mm Hg-m^3) [5.825 lb-°R/(psia-ft^3)]
M_{PVC} = Dry weight of polyvinyl chloride in reactor from recipe, kg (lb)
T_R = Reactor temperature, °C (°F)
K_T = Temperature conversion factor for °C to °K, 273 (°F to °R, 460)

(h)(1) Each piece of equipment within a process unit that can reasonably contain equipment in vinyl chloride service is presumed to be in vinyl chloride service unless an owner or operator demonstrates that the piece of equipment is not in vinyl chloride service. For a piece of equipment to be considered not in vinyl chloride service, it must be determined that the percent vinyl chloride content can be reasonably expected not to exceed 10 percent by weight for liquid streams or contained liquid volumes and 10 percent by volume for gas streams or contained gas volumes, which also includes gas volumes above liquid streams or contained liquid volumes. For purposes of determining the percent vinyl chloride content of the process fluid that is contained in or contacts equipment, procedures that conform to the methods described in ASTM Method D–2267 (incorporated by

reference as specified in § 61.18) shall be used.

(2)(i) An owner or operator may use engineering judgment rather than the procedures in paragraph (h)(1) of this section to demonstrate that the percent vinyl chloride content does not exceed 10 percent by weight for liquid streams and 10 percent by volume for gas streams, provided that the engineering judgment demonstrates that the vinyl chloride content clearly does not exceed 10 percent. When an owner or operator and the Administrator do not agree on whether a piece of equipment is not in vinyl chloride service, however, the procedures in paragraph (h)(1) of this section shall be used to resolve the disagreement.

(ii) If an owner or operator determines that a piece of equipment is in vinyl chloride service, the determination can be revised only after following the procedures in paragraph (h)(1) of this section.

(3) Samples used in determining the percent vinyl chloride content shall be representative of the process fluid that is contained in or contacts the equipment.

§ 61.68 [Amended]

18. Amend § 61.68 as follows:

a. Paragraph (c)(1) is amended by revising the words ''sections 5.2.1. and 5.2.2. of Test Method 106 and in accordance with section 7.1 of Test Method 106'' to read ''Sections 7.2.1 and 7.2.2 of Method 106 and in accordance with Section 10.1 of Method 106.''

b. In paragraph (c)(2), the fifth sentence is amended by revising the words ''section 7.3 of Test Method 106. The requirements in section 5.2.3.1. and 5.2.3.2. of Test Method 106'' to read ''Sections 8.1 and 9.2 of Method 106. The requirements in Sections 7.2.3.1 and 7.2.3.2 of Method 106.''

19. § 61.70(c) is revised as follows:

18440

§ 61.70 Reporting.

* * * * *

(c) Unless otherwise specified, the owner or operator shall use the test methods in Appendix B to this part to conduct emission tests as required by paragraphs (c)(2) and (c)(3) of this section, unless an alternative method has been approved by the Administrator. If the Administrator finds reasonable grounds to dispute the results obtained by an alternative method, he may require the use of a reference method. If the results of the reference and alternative methods do not agree, the results obtained by the reference method prevail, and the Administrator may notify the owner or operator that approval of the method previously considered to be alternative is withdrawn.

(1) The owner or operator shall include in the report a record of the vinyl chloride content of emissions for each 3-hour period during which average emissions are in excess of the emission limits in § 61.62(a) or (b), § 61.63(a), or § 61.64(a)(1), (b), (c), or (d), or during which average emissions are in excess of the emission limits specified for any control system to which reactor emissions are required to be ducted in § 61.64(a)(2) or to which fugitive emissions are required to be ducted in § 61.65(b)(I)(ii), (b)(2), (b)(5), (b)(6)(ii), or (b)(9)(ii). The number of 3-hour periods for which average emissions were determined during the reporting period shall be reported. If emissions in excess of the emission limits are not detected, the report shall contain a statement that no excess emissions have been detected. The emissions are to be determined in accordance with § 61.68(e).

(2) In polyvinyl chloride plants for which a stripping operation is used to attain the emission level prescribed in § 61.64(e), the owner or operator shall include in the report a record of the vinyl chloride content in the polyvinyl chloride resin.

(i) If batch stripping is used, one representative sample of polyvinyl chloride resin is to be taken from each batch of each grade of resin immediately following the completion of the stripping operation, and identified by resin type and grade and the date and time the batch is completed. The corresponding quantity of material processed in each stripper batch is to be recorded and identified by resin type and grade and the date and time the batch is completed.

(ii) If continuous stripping is used, one representative sample of polyvinyl chloride resin is to be taken for each grade of resin processed or at intervals of 8 hours for each grade of resin which is being processed, whichever is more frequent. The sample is to be taken as the resin flows out of the stripper and identified by resin type and grade and the date and time the sample was taken. The corresponding quantity of material processed by each stripper over the time period represented by the sample during the 8-hour period, is to be recorded and identified by resin type and grade and the date and time it represents.

(iii) The vinyl chloride content in each sample is to be determined by Method 107 as prescribed in § 61.67(g)(3).

(iv) [Reserved]

(v) The report to the Administrator by the owner or operator is to include a record of any 24-hour average resin vinyl chloride concentration, as determined in this paragraph, in excess of the limits prescribed in § 61.64(e). The vinyl chloride content found in each sample required by paragraphs (c)(2)(i) and (c)(2)(ii) of this section shall be averaged separately for each type of resin, over each calendar day and weighted according to the quantity of each grade of resin processed by the stripper(s) that calendar day, according to the following equation:

$$A_T = \frac{\sum_{i=1}^{n} P_{Gi} M_{Gi}}{Q_T} = \frac{P_{G1}M_{G1} + P_{G2}M_{G2} + \ldots + P_{Gn}M_{Gn}}{Q_T}$$

Where:

A_T = 24-hour average concentration of type T resin in ppm (dry weight basis).

Q_T = Total production of type T resin over the 24-hour period, in kg (ton).

T = Type of resin.

M_{Gi} = Concentration of vinyl chloride in one sample of grade G_i resin in ppm.

P_{Gi} = Production of grade G_i resin represented by the sample, in kg (ton).

G_i = Grade of resin: *e.g.*, G_1, G_2, G_3.

n = Total number of grades of resin produced during the 24-hour period.

The number of 24-hour average concentrations for each resin type determined during the reporting period shall be reported. If no 24-hour average resin vinyl chloride concentrations in excess of the limits prescribed in

§ 61.64(e) are measured, the report shall state that no excess resin vinyl chloride concentrations were measured.

(vi) The owner or operator shall retain at the source and make available for inspection by the Administrator for a minimum of 3 years records of all data needed to furnish the information required by paragraph (c)(2)(v) of this section. The records are to contain the following information:

(A) The vinyl chloride content found in all the samples required in paragraphs (c)(2)(i) and (c)(2)(ii) of this section, identified by the resin type and grade and the time and date of the sample, and

(B) The corresponding quantity of polyvinyl chloride resin processed by the stripper(s), identified by the resin type and grade and the time and date it represents.

(3) The owner or operator shall include in the report a record of any emissions from each reactor opening in excess of the emission limits prescribed in § 61.64(a)(2). Emissions are to be determined in accordance with § 61.67(g)(5), except that emissions for each reactor are to be determined. The number of reactor openings during the reporting period shall be reported. If emissions in excess of the emission limits are not detected, the report shall include a statement that excess emissions have not been detected.

(4) In polyvinyl chloride plants for which stripping in the reactor is used to attain the emission level prescribed in § 61.64(f), the owner or operator shall include in the report a record of the vinyl chloride emissions from reactor opening loss and all sources following the reactor used as a stripper.

(i) One representative sample of polyvinyl chloride resin is to be taken from each batch of each grade of resin immediately following the completion of the stripping operation, and identified by resin type and grade and the date and time the batch is completed. The corresponding quantity of material processed in each stripper batch is to be recorded and identified by resin type and grade and the date and time the batch is completed.

(ii) The vinyl chloride content in each sample is to be determined by Method 107 as prescribed in § 61.67(g)(3).

(iii) The combined emissions from reactor opening loss and all sources following the reactor used as a stripper are to be determined for each batch stripped in a reactor according to the procedure prescribed in § 61.67(g)(6).

(iv) The report to the Administrator by the owner or operator is to include a record of any 24-hour average combined reactor opening loss and emissions from all sources following the reactor used as a stripper as determined in this paragraph, in excess of the limits prescribed in § 61.64(f). The combined reactor opening loss and emissions from all sources following the reactor used as a stripper associated with each batch are to be averaged separately for each type of resin, over each calendar day and weighted according to the quantity of each grade of resin stripped in reactors that calendar day as follows:

For each type of resin (suspension, dispersion, latex, bulk, other), the following calculation is to be performed:

$$A_T = \frac{\sum_{i=1}^{n} P_{Gi} C_{Gi}}{Q_T} = \frac{P_{G1}C_{G1} + P_{G2}C_{G2} + \ldots + P_{Gn}C_{Gn}}{Q_T}$$

Where:

A_T = 24-hour average combined reactor opening loss and emissions from all sources following the reactor used as a stripper, in g vinyl chloride/kg (lb/ton) product (dry weight basis).

Q_T = Total production of resin in batches for which stripping is completed during the 24-hour period, in kg (ton).

T = Type of resin.

C_{Gi} = Average combined reactor opening loss and emissions from all sources following the reactor used as a stripper of all batches of grade G_i resin for which stripping is completed during the 24-hour period, in g vinyl chloride/kg (lb/ton) product (dry weight basis) (determined according to procedure prescribed in § 61.67(g)(6)).

P_{Gi} = Production of grade G_i resin in the batches for which C is determined, in kg (ton).

G_i = Grade of resin: e.g., G_1, G_2, G_3.

n = Total number of grades of resin in batches for which stripping is completed during the 24-hour period.

The number of 24-hour average emissions determined during the reporting period shall be reported. If no 24-hour average combined reactor opening loss and emissions from all sources following the reactor used as a stripper in excess of the limits prescribed in § 61.64(f) are determined, the report shall state that no excess vinyl chloride emissions were determined.

* * * * *

§ 61.93 [Amended]

20. In § 61.93, paragraphs (b)(1)(I), (b)(1)(ii), and (b)(2)(I) are amended by revising the words ''Reference Method'' to read ''Method'' wherever they occur.

§ 61.107 [Amended]

21. Amend § 61.107 as follows:

a. Paragraphs (b)(1)(I), (b)(1)(ii), and (b)(2)(I) are amended by revising the words ''Reference Method'' to read ''Method'' wherever they occur.

b. Paragraphs (b)(2)(iv) and (b)(5)(v) are amended by revising the words ''method 114'' to read ''Method 114'' wherever they occur.

c. Paragraph (b)(5)(iv) is amended by revising the words ''table 2'' to read ''Table 2'', wherever they occur.

§ 61.110 [Amended]

22. In § 61.110, paragraph (c)(2) is amended by revising the words ''1,000 megagrams'' to read ''1,000 megagrams (1,102 tons).''

§ 61.123 [Amended]

23. Amend § 61.123 as follows:

a. Paragraph (d) is amended by revising the words ''curies per metric ton'' to read ''curies per Mg or curies per ton'' wherever they occur.

b. In paragraph (d), the fifth sentence is amended by revising the words ''in metric tons'' to read ''in Mg (tons).''

§ 61.125 [Amended]

24. Amend § 61.125 as follows:

a. Paragraph (a)(1) is amended by revising the words ''Test Method 1 of Appendix A'' to read ''Method 1 of Appendix A.''

b. Paragraph (a)(2) is amended by revising the words ''Test Method 2 of Appendix A'' to read ''Method 2 of Appendix A.''

c. Paragraph (a)(3) is amended by revising the words ''Test Method 3 of Appendix A'' to read ''Method 3 of Appendix A.''

d. Paragraph (a)(4) is amended by revising the words ''Test Method 5 of

Appendix A'' to read ''Method 5 of Appendix A.''

e. Paragraph (a)(5) is amended by revising the words ''Test Method 111 of Appendix B'' to read ''Method 111 of Appendix B.''

§ 61.132 [Amended]

25. In § 61.132, paragraphs (b) and (b)(1) are amended by revising the words ''Reference Method'' to read ''Method'' wherever they occur.

§ 61.133 [Amended]

26. In § 61.133, paragraphs (c) and (c)(1) are amended by revising the words ''Reference Method'' to read ''Method'' wherever they occur.

27. Amend § 61.139 as follows:

a. In paragraph (c)(1), the equation definitions for ''Q_{aj}'' and ''Q_{bi}'' are revised.

b. Paragraph (d)(2)(ii) is amended by revising the words ''method 21'' to read ''Method 21'' wherever they occur.

c. In paragraph (g)(1)(vi), the second sentence is amended by revising the words ''Either follow section 7.1, ''Integrated Bag Sampling and Analysis,'' or section 7.2, ''Direct Interface Sampling and Analysis Procedure'''' to read ''Either the integrated bag sampling and analysis procedure or the direct interface procedure may be used.''

d. Paragraph (g)(1)(vi)(A) is amended by revising the words ''section 7.1'' to read ''the integrated bag sampling and analysis procedure.''

e. In paragraph (g)(1)(vi)(B), the first sentence is amended by revising the words ''section 7.2'' to read ''the direct interface sampling and analysis procedure.''

f. Paragraphs (h)(3), (h)(3)(ii), and (h)(4)(ii) are amended by revising the words ''method 18'' to read ''Method 18'' wherever they occur.

The revisions read as follows:

§ 61.139 Provisions for alternative means for process vessels, storage tanks, and tar-intercepting sumps.

* * * * *

(c) * * *

(1) * * *

Q_{aj} = volumetric flow rate in vents after the control device, standard cubic meters/minute (scm/min) [standard cubic feet/minute (scf/min)].

Q_{bi} = volumetric flow rate in vents before the control device, scm/min (scf/min).

* * * * *

61.155 [Amended]

28. In § 61.155, the section heading is amended by revising the words ''asbesto-containing'' to read ''asbestos-containing.''

§ 61.162 [Amended]

29. Amend § 61.162 as follows:

a. Paragraph (a)(1) is amended by revising the words ''2.5 Mg per year'' to read ''2.5 Mg (2.7 ton) per year.''

b. Paragraph (b)(1) is amended by revising the words ''0.4 Mg per year'' to read ''0.4 Mg (0.44 ton) per year.''

30. Amend § 61.164 as follows:

a. Paragraph (c) is amended by revising the words ''8.0 Mg per year'' to read ''8.0 Mg (8.8 ton) per year.''

b. Paragraph (c) is amended by revising the words ''1.0 Mg per year'' to read ''1.0 Mg (1.1 ton) per year.''

c. In paragraph (c)(1), the first sentence is amended by revising the words ''grams of elemental arsenic per kilogram'' to read ''grams of elemental arsenic per kilogram (pounds per ton).''

d. Paragraphs (c)(1) and (d)(3) are revised; the equation and definitions in paragraphs (c)(2) and (d)(5) are revised; and the definitions of the terms ''R_a'' and ''T_i'' in paragraph (d)(4) are revised.

e. Paragraph (d) is amended by revising the words ''8.0 Mg per year'' to read ''8.0 Mg (8.8 ton) per year.''

f. Paragraph (d) is amended by revising the words ''1.0 Mg per year'' to read ''1.0 Mg (1.1 ton) per year.''

g. Paragraph (d)(2)(i) is amended by revising the words ''emission rate (g/h)'' to read ''emission rate, g/hr (lb/hr).''

h. Paragraph (d)(2)(ii)(D) is amended by revising the words ''Section 4 of Method 5D'' to read ''Section 8.0 of Method 5D.''

i. Paragraph (e)(1)(ii)(D) is amended by revising the words ''Section 4 of Method 5D'' to read ''Section 8.0 of Method 5D.''

The revisions read as follows:

§ 61.164 Test methods and procedures.

* * * * *

(c) * * *

(1) Derive a theoretical uncontrolled arsenic emission factor (T), based on material balance calculations for each arsenic-containing glass type (i) produced during the 12-month period, as follows:

$$T_i = (A_{bi} \times W_{bi}) + (A_{ci} \times W_{ci}) - B_{gi}$$

Where:

T_i = The theoretical uncontrolled arsenic emission factor for each glass type (i), g/kg (lb/ton).

A_{bi} = Fraction by weight of elemental arsenic in the fresh batch for each glass type (I).

W_{bi} = Weight of fresh batch melted per unit weight of glass produced for each glass type (i), g/kg (lb/ton).

A_{ci} = Fraction by weight of elemental arsenic in cullet for each glass type (i).

W_{ci} = Weight of cullet melted per unit weight of glass produced for each glass type (i), g/kg (lb/ton).

B_{gi} = Weight of elemental arsenic per unit weight of glass produced for each glass type (i), g/kg (lb/ton).

(2) * * *

$$Y_i = \frac{T_i G_i}{K}$$

Where:

Y_i = Theoretical uncontrolled arsenic emission estimate for the 12-month period for each glass type, Mg/year (ton/year).

T_i = Theoretical uncontrolled arsenic emission factor for each type of glass (i) produced during the 12-month period as calculated in paragraph (c)(1) of this section, g/kg (lb/ton).

G_i = Quantity of each arsenic-containing glass type (i) produced during the 12-month period, kg/yr (ton/yr).

K = conversion factor for unit consistency, 10^6 g/Mg (2,000 lb/ton).

* * * * *

(d) * * *

(3) Determine the actual uncontrolled arsenic emission factor (R_a) as follows:

$$R_a = E_a \div P$$

Where:

R_a = Actual uncontrolled arsenic emission factor, g/kg (lb/ton).

E_a = Actual uncontrolled arsenic emission rate from paragraph (d)(2) of this section, g/hr (lb/hr).

P = Rate of glass production, kg/hr (ton/hr), determined by dividing the weight of glass pulled from the furnace during the emission test by the number of hours taken to perform the test under paragraph (d)(2) of this section.

(4) * * *

R_a = Actual uncontrolled arsenic emission factor, determined in paragraph (d)(3) of this section, g/kg (lb/ton).

T_i = Theoretical uncontrolled arsenic emission factor, g/kg (lb/ton), determined in paragraph (c)(1) of this section for the same glass type for which R_a was determined.

(5) * * *

$$U = \frac{\sum_{i=1}^{n}\left(T_i \times F \times G_i\right)}{K}$$

Where:

U = Uncontrolled arsenic emission rate for the 12-month period, Mg/yr (ton/yr).

T_i = Theoretical uncontrolled arsenic emission factor for each type of glass (i) produced during the 12-month period as calculated in paragraph (c)(1) of this section, g/kg (lb/ton).

F = The correction factor calculated in paragraph (d)(4) of this section.

G_i = Quantity of each arsenic-containing glass type (i) produced during the 12-month period, kg/yr (ton/yr).

n = Number of arsenic-containing glass types produced during the 12-month period.

K = Conversion factor for unit consistency, 10^6 g/Mg (2,000 lb/ton).

* * * * *

§ 61.165 [Amended]

31. In § 61.165, paragraph (a)(7) is amended by revising the words ''all records of maintenance'' at the beginning of the sentence to read ''All maintenance.''

§ 61.172 [Amended]

32. Amend § 61.172 as follows:

a. Paragraph (a) is amended by revising the words ''75 kg/h'' to read ''75 kg/hr (165 lb/hr).''

b. Paragraph (c) is amended by revising the words ''11.6 milligrams per dry standard cubic meter'' to read ''11.6 mg/dscm (0.0051 gr/dscf).''

§ 61.174 [Amended]

33. In § 61.174, paragraph (f)(3)is amended by revising the equation definitions as follows:

§ 61.174 Test methods and procedures.

* * * * *

(f) * * *

(3) * * *

R_c is the converter arsenic charging rate, kg/hr (lb/hr).

A_c is the monthly average weight percent of arsenic in the copper matte charged during the month(%) as determined under paragraph (f)(2) of this section.

A_l is the monthly average weight percent of arsenic in the lead matte charged during the month(%) as determined under paragraph (f)(2) of this section.

W_{ci} is the total rate of copper matte charged to a copper converter during the month, kg (lb).

W_{li} is the total rate of lead matte charged to a copper converter during the month, kg (lb).

H_c is the total number of hours the copper converter department was in operation during the month (hr).

n is the number of copper converters in operation during the month.

* * * * *

§ 61.192 [Amended]

34. In § 61.192, the first sentence is amended by revising the words ''20 pCi/-m²-s'' to read ''20 picocuries per square meter per second (pCi/(m²-sec)) (1.9 pCi/(ft²-sec)).''

§ 61.202 [Amended]

35. In § 61.202, the third sentence is amended by revising the words ''20 pCi/m²-s'' to read ''20 pCi/(m²-sec) (1.9 pCi/(ft²-sec)).''

§ 61.204 [Amended]

36. In § 61.204, paragraph (b) is amended by revising the words ''10 picocuries per gram (pCi/g)'' to read ''10 pCi/g (4500 pCi/lb).''

§ 61.205 [Amended]

37–38. In § 61.205, paragraph (b)(2) is amended by revising the words ''7,000 pounds'' to read ''3182 kg (7,000 lb)'' wherever they occur.

§ 61.208 [Amended]

39. Amend § 61.208 as follows:

a. Paragraph (a)(1)(iii) is amended by revising the words ''quantity (in pounds) of phosphogypsum'' are revised to read ''quantity of phosphogypsum, in kilograms or pounds.''

b. Paragraph (a)(1)(vi) is amended by revising the words ''in pCi/g'' to read ''in pCi/g (pCi/lb).''

§ 61.222 [Amended]

40. In § 61.222, paragraph (a) is amended by revising the words ''20 pCi/m²-s'' to read ''20 pCi/(m²-sec) (1.9 pCi/(ft²-sec)).''

§ 61.241 [Amended]

41. In § 61.241, the definition of the term ''In vacuum service'' is amended by revising the words ''5 kilopascals (kPa) below'' to read ''5 kilopascals (kPa) (0.7 psia) below.''

§ 61.242–11 [Amended]

42. In § 61.242–11, paragraph (c) is amended by revising the words ''760 °C'' to read ''760 °C (1,400 °F).''

§ 61.243–2 [Amended]

43. Amend § 61.243–2 as follows:

a. Paragraph (b)(2) is amended by revising the words ''skip 1 of the'' to read ''skip one of the.''

b. Paragraph (b)(3) is amended by revising the words ''After 5 consecutive'' to read ''After five consecutive.''

c. Paragraph (b)(3) is amended by revising the words ''skip 3 of the quartely'' to read ''skip three of the quarterly.''

§ 61.244 [Amended]

44. Amend § 61.244 as follows:

a. In paragraph (b)(1) by revising the words ''emission limitation.limitation to test data'' to read ''emission limitation to test data.''

b. By redesignating paragraph (b)(3) as paragraph (b)(2).

§ 61.245 [Amended]

45–46. Amend § 61.245 as follows:

a. Paragraphs (b)(2), (b)(3), (b)(5), (c)(2), (c)(3), (e)(3), and (e)(4) are amended by revising the words ''Reference Method'' to read ''Method'' wherever they occur.

b. In paragraph (e)(3), the definitions of the terms ''H_T'', ''K'', ''C_i'', and ''H_i'' are revised; and the equation and definitions in (e)(5) are revised as follows:

§ 61.245 Test methods and procedures.

* * * * *

(e) * * *

(3) * * *

H_T = Net heating value of the sample, MJ/scm (BTU/scf); where the net enthalpy per mole of offgas is based on combustion at 25 °C and 760 mm Hg (77 °F and 14.7 psi), but the standard temperature for determining the volume corresponding to one mole is 20 °C (68 °F).

K = conversion constant, 1.740×10^{7} (g-mole) (MJ)/(ppm-scm-kcal) (metric units); or 4.674×10^{8} ((g-mole) (Btu)/(ppm-scf-kcal)) (English units)

Ci = Concentration of sample component ''i'' in ppm, as measured by Method 18 of Appendix A to 40 CFR Part 60 and ASTM D2504–67, 77, or 88 (Reapproved 1993) (incorporated by reference as specified in § 61.18).

H_i = net heat of combustion of sample component ''i'' at 25 °C and 760 mm Hg (77 °F and 14.7 psi), kcal/g-mole. The heats of combustion may be determined using ASTM D2382–76 or 88 or D4809–95 (incorporated by reference as specified in § 61.18) if published values are not available or cannot be calculated.

* * * * *

(5) * * *

$$V_{max} = K_1 + K_2 H_T$$

Where:

V_{max} = Maximum permitted velocity, m/sec (ft/sec).

H_T = Net heating value of the gas being combusted, as determined in paragraph (e)(3) of this section, MJ/scm (Btu/scf).

K_1 = 8.706 m/sec (metric units)
= 28.56 ft/sec (English units)

K_2 = 0.7084 m^4/(MJ-sec) (metric units)
= 0.087 ft^4/(Btu-sec) (English units)

* * * * *

§ 61.252 [Amended]

47. In § 61.252, paragraph (a) is amended by revising the words ''20 pCi/m^2-s'' to read 20 pCi/(m^2-sec) (1.9 pCi/(ft^2-sec)).

§ 61.270 [Amended]

48. Amend § 61.270 as follows:

a. Paragraph (a) is revised.

b. Paragraph (e) is amended by revising the words ''204.9 kPa'' to read ''204.9 kPa (29.72 psia).''

The revisions read as follows:

§ 61.270 Applicability and designation of sources.

(a) The source to which this subpart applies is each storage vessel that is storing benzene having a specific gravity within the range of specific gravities specified in ASTM D836–84 for Industrial Grade Benzene, ASTM D835–85 for Refined Benzene-485, ASTM D2359–85a or 93 for Refined Benzene-535, and ASTM D4734–87 or 96 for Refined Benzene-545. These specifications are incorporated by reference as specified in § 61.18. See § 61.18 for acceptable versions of these methods.

* * * * *

§ 61.272 [Amended]

49. Amend § 61.272 as follows:

a. In paragraph (c)(1)(i), the fourth sentence is amended by revising the words ''816 °C'' to read ''816 °C (1,500 °F).''

b. Paragraph (d) is amended by revising the letter ''O'' in the words ''40 CFR 6O.18(e)'' to read ''40 CFR 60.18(e).''

§ 61.301 [Amended]

50. Amend § 61.301 as follows:

a. The definitions of the terms ''Leak'' and ''Vapor-tight marine vessel'' are amended by revising the words ''method 21'' to read ''Method 21'' wherever they occur.

b. In the definition of the terms ''Vapor-tight tank truck or vapor-tight railcar'', the second sentence is amended by revising the words ''method 27 of part 60, appendix A'' to read ''Method 27 of Appendix A to 40 CFR part 60.''

§ 61.302 [Amended]

51. Amend § 61.302 as follows:

a. In paragraph (d)(1), the third sentence is amended by revising the words ''method 27 of part 60, appendix A'' to read ''Method 27 of Appendix A to 40 CFR Part 60.''

b. In paragraph (e)(2), the second sentence is amended by revising the words ''method 21 of part 60, appendix A'' to read ''Method 21 of Appendix A to 40 CFR Part 60.''

c. In paragraph (e)(2)(ii)(B), fourth sentence, the words ''method 21'' are revised to read ''Method 21 of Appendix A to 40 CFR Part 60.''

d. In paragraph (h), the first sentence is amended by revising the words ''method 27 of part 60, appendix A'' to read ''Method 27 of Appendix A to 40 CFR Part 60.''

§ 61.303 [Amended]

52. In § 61.303, paragraphs (c), (c)(1), and (c)(2) are amended by revising the words ''44 MW'' to read ''44 MW (150 $\times 10^6$ BTU/hr)'' wherever they occur.

§ 61.304 [Amended]

53. Amend § 61.304 as follows:

a. Paragraph (a)(4)(iii) is amended by revising the word ''method'' to read ''Method.''

b. In paragraph (a)(4)(iv), the first sentence is amended by revising the words ''method 25A or method 25B'' to read ''Method 25A or Method 25B.''

c. Paragraph (b) is amended by revising the words ''a performance test according to method 22 of appendix A of this part, shall be performed to determine visible emissions. The observation period shall be at least 2 hours and shall be conducted according to method 22'' to read ''a performance test according to Method 22 of appendix A of 40 CFR part 60 shall be performed to determine visible emissions. The observation period shall be at least 2 hours.''

54. Amend § 61.305 as follows:

a. Paragraphs (a), (b)(3), and (d) are amended by revising the words ''44 MW'' to read ''44 MW (150 $\times 10^6$ BTU/hr)'' wherever they occur.

b. Paragraph (a)(3)(ii) is revised.

c. Paragraphs (b)(1), (b)(2), and (b)(3) are amended by revising the words ''28 °C'' to read ''28 °C (50 °F)'' wherever they occur.

The revisions read as follows:

§ 61.305 Reporting and recordkeeping.

(a) * * *

(3) * * *

(ii) The average combustion temperature of the steam generating unit or process heater with a design heat input capacity of less than 44 MW (150 $\times 10^6$ BTU/hr), measured with the following frequency: at least every 2 minutes during a loading cycle if the total time period of the loading cycle is less than 3 hours, and every 15 minutes if the total time period of the loading cycle is equal to or greater than 3 hours. The measured temperature shall be averaged over the loading cycle.

* * * * *

§ 61.342 [Amended]

55. Amend § 61.342 as follows:

a. In paragraph (a), the first sentence, the words ''10 megagrams per year (Mg/yr)'' are revised to read ''10 megagrams per year (Mg/yr) (11 ton/yr).''

b. Paragraphs (a)(3), (b), (c), (c)(3)(i), (d), and (e) are amended by revising the words ''10 Mg/yr'' to read ''10 Mg/yr (11 ton/yr).''

c. Paragraph (c)(3)(i) is amended by revising the words ''0.02 liters per minute'' to read ''0.02 liters per minute (0.005 gallons per minute).''

d. Paragraph (c)(3)(ii)(B) is amended by revising the words ''2.0 Mg/yr'' to read ''2.0 Mg/yr (2.2 ton/yr).''

e. Paragraph (d)(2)(1) is redesignated as paragraph (d)(2)(i).

f. In paragraph (d)(2)(i), the first sentence is amended by revising the words ''1 Mg/yr'' to read ''1 Mg/yr (1.1 ton/yr).''

g. In paragraph (e)(2)(i), the first sentence is amended by revising the words ''6.0 Mg/yr'' to read ''6.0 Mg/yr (6.6 ton/yr).''

§ 61.348 [Amended]

56. Amend § 61.348 as follows:

a. In paragraph (b)(2)(ii), the first sentence is amended by revising the words ''1 Mg/yr'' to read ''1 Mg/yr (1.1 ton/yr).''

b. In paragraph (b)(2)(ii)(B), by revising the third sentence.

The revision reads as follows:

§ 61.348 Standards: Treatment processes.

(b) * * *

(2) * * *

(ii) * * *

(B) * * * An enhanced biodegradation unit typically operates at a food-to-microorganism ratio in the range of 0.05 to 1.0 kg of biological oxygen demand per kg of biomass per day, a mixed liquor suspended solids ratio in the range of 1 to 8 grams per liter (0.008 to 0.7 pounds per liter), and a residence time in the range of 3 to 36 hours.

* * * * *

§ 61.349 [Amended]

57. In § 61.349, paragraph (a)(2)(i)(C) is amended by revising the words ''760 °C'' to read ''760 °C (1,400 °F).''

§ 61.354 [Amended]

58. In § 61.354, paragraph (c)(4) is amended by revising the words ''44 megawatts (MW)'' to read ''44 MW (150 $\times 10^6$ BTU/hr).''

58a. In paragraph (c)(5), ''44 MW'' is revised to read ''44 MW (150 $\times 10^6$ BTU/hr).''

§ 61.355 [Amended]

59. Amend § 61.355 as follows:

a. Paragraphs (a)(3), (a)(4), (a)(4)(ii) are amended by revising the words ''10 Mg/yr'' to read ''10 Mg/yr (11 ton/yr)'' wherever they occur.

b. Paragraphs (a)(4), (a)(5), and (a)(5)(ii) are amended by revising the words ''1 Mg/yr'' to read ''1 Mg/yr (1.1 ton/yr)'' wherever they occur.

c. Paragraphs (c)(3)(ii)(F) and (c)(3)(ii)(H) are amended by revising the words ''10 °C'' to read ''10 °C (50 °F)'' wherever they occur.

d. Paragraph (c)(3)(v) is amended by revising the words ''kg/yr'' to read ''kg/yr (lb/yr)'' wherever they occur.

e. Paragraphs (e)(3), (e)(4), (f)(3), (f)(4)(iv), (f)(5), (i)(3)(iv), and (i)(4) are amended by revising the definitions of the terms used in the equations; and (f)(4)(iii) and (i)(3)(iii) are amended by revising the equation and definitions of terms used in the equations.

f. Paragraphs (f)(4)(ii)(B), (f)(4)(ii)(C), (h)(1), (h)(2), (h)(3), (h)(5), (h)(6), (i)(2), (i)(3)(ii)(B), and (i)(3)(ii)(C) are amended by revising the word ''method'' to read ''Method'' wherever it occurs.

g. Paragraph (k)(7) is amended by revising the words ''6.0 Mg/yr'' to read ''6.0 Mg/yr (6.6 ton/yr).''

The revisions read as follows:

§ 61.355 Test methods, procedures, and compliance provisions.

* * * * *

(e) * * *

(3) * * *

E_b = Mass flow rate of benzene entering the treatment process, kg/hr (lb/hr).

K = Density of the waste stream, kg/m^3 (lb/ft^3).

V_i = Average volume flow rate of waste entering the treatment process during each run i, m^3/hr (ft^3/hr).

C_i = Average concentration of benzene in the waste stream entering the treatment process during each run i, ppmw.

n = Number of runs.

10^6 = Conversion factor for ppmw.

(4) * * *

E_a = Mass flow rate of benzene exiting the treatment process, kg/hr (lb/hr).

K = Density of the waste stream, kg/m^3 (lb/ft^3).

V_i = Average volume flow rate of waste exiting the treatment process during each run i, m^3/hr (ft^3/hr).

C_i = Average concentration of benzene in the waste stream exiting the treatment process during each run i, ppmw.

n = Number of runs.

10^6 = Conversion factor for ppmw.

(f) * * *

(3) * * *

E_b = Mass flow rate of benzene entering the combustion unit, kg/hr (lb/hr).

K = Density of the waste stream, kg/m^3 (lb/ft^3).

V_i = Average volume flow rate of waste entering the combustion unit during each run i, m^3/hr (ft^3/hr).

C_i = Average concentration of benzene in the waste stream entering the combustion unit during each run i, ppmw.

n = Number of runs.

10^6 = Conversion factor for ppmw.

(4) * * *

(iii) * * *

$$M_i = D_b V C \left(10^{-6}\right)$$

Where:

M_i = Mass of benzene emitted during run i, kg (lb).

V = Volume of air-vapor mixture exhausted at standard conditions, m^3 (ft^3).

C = Concentration of benzene measured in the exhaust, ppmv.

D_b = Density of benzene, 3.24 kg/m^3 (0.202 lb/ft^3).

10^6 = Conversion factor for ppmv.

(iv) * * *

E_a = Mass flow rate of benzene emitted from the combustion unit, kg/hr (lb/hr).

M_i = Mass of benzene emitted from the combustion unit during run i, kg (lb).

T = Total time of all runs, hr.

n = Number of runs.

(5) * * *

R = Benzene destruction efficiency for the combustion unit, percent.

E_b = Mass flow rate of benzene entering the combustion unit, kg/hr (lb/hr).

E_a = Mass flow rate of benzene emitted from the combustion unit, kg/hr (lb/hr).

* * * * *

(i) * * *

(3) * * *

(iii) * * *

$$M_{aj} = \frac{K_l V_{aj}}{10^6}\left(\sum_{i=1}^{n} C_{ai} MW_i\right)$$

$$M_{bj} = \frac{K_l V_{bj}}{10^6}\left(\sum_{i=1}^{n} C_{bi} MW_i\right)$$

M_{aj} = Mass of organics or benzene in the vent stream entering the control device during run j, kg (lb).

M_{bj} = Mass of organics or benzene in the vent stream exiting the control device during run j, kg (lb).

V_{aj} = Volume of vent stream entering the control device during run j, at standard conditions, m^3 (ft^3).

V_{bj} = Volume of vent stream exiting the control device during run j, at standard conditions, m^3 (ft^3).

C_{ai} = Organic concentration of compound i or the benzene concentration measured in the vent stream entering the control device as determined by Method 18, ppm by volume on a dry basis.

C_{bi} = Organic concentration of compound i or the benzene concentration measured in the vent stream exiting the control device as determined by Method 18, ppm by volume on a dry basis.

MW_i = Molecular weight of organic compound i in the vent stream, or the molecular weight of benzene, kg/kg-mol (lb/lb-mole).

n = Number of organic compounds in the vent stream; if benzene reduction efficiency is being demonstrated, then n=1.

K_1 = Conversion factor for molar volume at standard conditions (293 K and 760 mm Hg (527 R and 14.7 psia)) = 0.0416 kg-mol/m^3 (0.00118 lb-mol/ft^3)

10^{-6}=Conversion factor for ppmv.

(iv) * * *

E_a = Mass flow rate of organics or benzene entering the control device, kg/hr (lb/hr).

E_b = Mass flow rate of organics or benzene exiting the control device, kg/hr (lb/hr).

M_{aj} = Mass of organics or benzene in the vent stream entering the control device during run j, kg (lb).

M_{bj} = Mass of organics or benzene in the vent stream exiting the control device during run j, kg (lb).

T = Total time of all runs, hr.

n = Number of runs.

(4) * * *

R = Total organic reduction of efficiency or benzene reduction efficiency for the control device, percent.

E_b = Mass flow rate of organics or benzene entering the control device, kg/hr (lb/hr).

E_a = Mass flow rate of organic or benzene emitted from the control device, kg/hr (lb/hr).

* * * * *

§ 61.356 [Amended]

60. Amend § 61.356 as follows:

a. Paragraph (b)(2)(i) is amended by revising the words ''0.02 liters per minute'' to read ''0.02 liters (0.005 gallons) per minute.''

b. Paragraph (b)(2)(i) is amended by revising the words ''10 Mg/yr'' to read ''10 Mg/yr (11 ton/yr).''

c. Paragraph (b)(2)(ii) is amended by revising the words ''2.0 Mg/yr'' to read ''2.0 Mg/yr (2.2 ton/yr).''

d. Paragraph (b)(4) is amended by revising the words ''6.0 Mg/yr'' to read ''6.0 Mg/yr (6.6 ton/yr).''

e. Paragraphs (j)(4), (j)(5), and (j)(6) are amended by revising the words ''28 °C'' to read ''28 °C (50 °F)'' wherever they occur.

f. Paragraph (j)(6) is amended by revising the words ''44 MW'' to read ''44 MW (150 × 106 BTU/hr)'' wherever they occur.

g. Paragraph (j)(8) is amended by revising the words ''6 °C'' to read ''6 °C (11 °F)'' wherever they occur.

§ 61.357 [Amended]

61. Amend § 61.357 as follows:

a. Paragraphs (b) and (c) are amended by revising the words ''1 Mg/yr'' to read ''1 Mg/yr (1.1 ton/yr)'' wherever they occur.

b. Paragraphs (c) and (d) are amended by revising the words ''10 Mg/yr'' to read ''10 Mg/yr (11 ton/yr)'' wherever they occur.

c. Paragraphs (d)(7)(iv)(A), (d)(7)(iv)(B), and (d)(7)(iv)(C) are amended by revising the words ''28 °C'' to read ''28 °C (50 °F)'' wherever they occur.

d. Paragraph (d)(7)(iv)(C) is amended by revising the words ''44 MW'' to read ''44 MW (150 × 106 BTU/hr).''

e. Paragraph (d)(7)(iv)(E) is amended by revising the words ''6 °C'' to read ''6 °C (11 °F).''

62. In Part 61, Appendix B is amended by revising Methods 101, 101A, 102, 103, 104, 105, 106, 107, 107A, 108, 108A, 108B, 108C, and 111 to read as follows:

Method 101—Determination of Particulate and Gaseous Mercury Emissions From Chlor-Alkali Plants (Air Streams)

Note: This method does not include all of the specifications (*e.g.,* equipment and supplies) and procedures (*e.g.,* sampling and analytical) essential to its performance. Some material is incorporated by reference from methods in Appendix A to 40 CFR Part 60. Therefore, to obtain reliable results, persons using this method should have a thorough knowledge of at least the following additional test methods: Method 1, Method 2, Method 3, and Method 5.

1.0 Scope and Application

1.1 Analytes.

Analyte	CAS No.	Sensitivity
Mercury (Hg)	7439–97–6	Dependent upon recorder and spectrophotometer.

1.2 Applicability. This method is applicable for the determination of Hg emissions, including both particulate and gaseous Hg, from chlor-alkali plants and other sources (as specified in the regulations) where the carrier-gas stream in the duct or stack is principally air.

1.3 Data Quality Objectives. Adherence to the requirements of this method will enhance the quality of the data obtained from air pollutant sampling methods.

2.0 Summary of Method

Particulate and gaseous Hg emissions are withdrawn isokinetically from the source and collected in acidic iodine monochloride (ICl) solution. The Hg collected (in the mercuric form) is reduced to elemental Hg, which is then aerated from the solution into an optical cell and measured by atomic absorption spectrophotometry.

3.0 Definitions [Reserved]

4.0 Interferences

4.1 Sample Collection. Sulfur dioxide (SO_2) reduces ICl and causes premature depletion of the ICl solution.

4.2 Sample Analysis.

4.2.1 ICl concentrations greater than 10^{-4} molar inhibit the reduction of the Hg (II) ion in the aeration cell.

4.2.2 Condensation of water vapor on the optical cell windows causes a positive interference.

5.0 Safety

5.1 Disclaimer. This method may involve hazardous materials, operations, and equipment. This test method does not purport to address all of the safety problems associated with its use. It is the responsibility of the user of this test method to establish appropriate safety and health practices and determine the applicability of regulatory limitations prior to performing this test method.

5.2 Corrosive Reagents. The following reagents are hazardous. Personal protective equipment and safe procedures are useful in preventing chemical splashes. If contact occurs, immediately flush with copious amounts of water for at least 15 minutes. Remove clothing under shower and decontaminate. Treat residual chemical burn as thermal burn.

5.2.1 Hydrochloric Acid (HCl). Highly toxic and corrosive. Causes severe damage to tissues. Vapors are highly irritating to eyes, skin, nose, and lungs, causing severe damage. May cause bronchitis, pneumonia, or edema of lungs. Exposure to concentrations of 0.13 to 0.2 percent can be lethal to humans in a few minutes. Provide ventilation to limit exposure. Reacts with metals, producing hydrogen gas.

5.2.2 Nitric Acid (HNO_3). Highly corrosive to eyes, skin, nose, and lungs. Vapors cause bronchitis, pneumonia, or edema of lungs. Reaction to inhalation may be delayed as long as 30 hours and

still be fatal. Provide ventilation to limit exposure. Strong oxidizer. Hazardous reaction may occur with organic materials such as solvents.

5.2.3 Sulfuric Acid (H_2SO_4). Rapidly destructive to body tissue. Will cause third degree burns. Eye damage may result in blindness. Inhalation may be fatal from spasm of the larynx, usually within 30 minutes. 3 mg/m^3 will cause lung damage. 1 mg/m^3 for 8 hours will cause lung damage or, in higher concentrations, death. Provide ventilation to limit inhalation. Reacts violently with metals and organics.

6.0 Equipment and Supplies.

6.1 Sample Collection. A schematic of the sampling train used in performing this method is shown in Figure 101–1; it is similar to the Method 5 sampling train. The following items are required for sample collection:

6.1.1 Probe Nozzle, Pitot Tube, Differential Pressure Gauge, Metering System, Barometer, and Gas Density Determination Equipment. Same as Method 5, Sections 6.1.1.1, 6.1.1.3, 6.1.1.4, 6.1.1.9, 6.1.2, and 6.1.3, respectively.

6.1.2 Probe Liner. Borosilicate or quartz glass tubing. A heating system capable of maintaining a gas temperature of 120 ± 14 °C (248 ± 25 °F) at the probe exit during sampling may be used to prevent water condensation.

Note: Do not use metal probe liners.

6.1.3 Impingers. Four Greenburg-Smith impingers connected in series with leak-free ground glass fittings or any similar leak-free noncontaminating fittings. For the first, third, and fourth impingers, impingers that are modified by replacing the tip with a 13-mm ID (0.5-in.) glass tube extending to 13 mm (0.5 in.) from the bottom of the flask may be used.

6.1.4 Acid Trap. Mine Safety Appliances air line filter, Catalog number 81857, with acid absorbing cartridge and suitable connections, or equivalent.

6.2 Sample Recovery. The following items are needed for sample recovery:

6.2.1 Glass Sample Bottles. Leakless, with Teflon-lined caps, 1000- and 100-ml.

6.2.2 Graduated Cylinder. 250-ml.

6.2.3 Funnel and Rubber Policeman. To aid in transfer of silica gel to container; not necessary if silica gel is weighed in the field.

6.2.4 Funnel. Glass, to aid in sample recovery.

6.3 Sample Preparation and Analysis. The following items are needed for sample preparation and analysis:

6.3.1 Atomic Absorption Spectrophotometer. Perkin-Elmer 303, or equivalent, containing a hollow-cathode mercury lamp and the optical cell described in Section 6.3.2.

6.3.2 Optical Cell. Cylindrical shape with quartz end windows and having the dimensions shown in Figure 101–2. Wind the cell with approximately 2 meters (6 ft) of 24-gauge Nichrome wire, or equivalent, and wrap with fiberglass insulation tape, or equivalent; do not let the wires touch each other.

6.3.3 Aeration Cell. Constructed according to the specifications in Figure 101–3. Do not use a glass frit as a substitute for the blown glass bubbler tip shown in Figure 101–3.

6.3.4 Recorder. Matched to output of the spectrophotometer described in Section 6.3.1.

6.3.5 Variable Transformer. To vary the voltage on the optical cell from 0 to 40 volts.

6.3.6 Hood. For venting optical cell exhaust.

6.3.7 Flow Metering Valve.

6.3.8 Rate Meter. Rotameter, or equivalent, capable of measuring to within 2 percent a gas flow of 1.5 liters/min (0.053 cfm).

6.3.9 Aeration Gas Cylinder. Nitrogen or dry, Hg-free air, equipped with a single-stage regulator.

6.3.10 Tubing. For making connections. Use glass tubing (ungreased ball and socket connections are recommended) for all tubing connections between the solution cell and the optical cell; do not use Tygon tubing, other types of flexible tubing, or metal tubing as substitutes. Teflon, steel, or copper tubing may be used between the nitrogen tank and flow metering valve (Section 6.3.7), and Tygon, gum, or rubber tubing between the flow metering valve and the aeration cell.

6.3.11 Flow Rate Calibration Equipment. Bubble flow meter or wet-test meter for measuring a gas flow rate of 1.5 ± 0.1 liters/min (0.053 ± 0.0035 cfm).

6.3.12 Volumetric Flasks. Class A with penny head standard taper stoppers; 100-, 250-, 500-, and 1000-ml.

6.3.13 Volumetric Pipets. Class A; 1-, 2-, 3-, 4-, and 5-ml.

6.3.14 Graduated Cylinder. 50-ml.

6.3.15 Magnetic Stirrer. General-purpose laboratory type.

6.3.16 Magnetic Stirring Bar. Teflon-coated.

6.3.17 Balance. Capable of weighing to ± 0.5 g.

6.3.18 Alternative Analytical Apparatus. Alternative systems are allowable as long as they meet the following criteria:

6.3.18.1 A linear calibration curve is generated and two consecutive samples of the same aliquot size and concentration agree within 3 percent of their average.

6.3.18.2 A minimum of 95 percent of the spike is recovered when an aliquot of a source sample is spiked with a known concentration of Hg (II) compound.

6.3.18.3 The reducing agent should be added after the aeration cell is closed.

6.3.18.4 The aeration bottle bubbler should not contain a frit.

6.3.18.5 Any Tygon tubing used should be as short as possible and conditioned prior to use until blanks and standards yield linear and reproducible results.

6.3.18.6 If manual stirring is done before aeration, it should be done with the aeration cell closed.

6.3.18.7 A drying tube should not be used unless it is conditioned as the Tygon tubing above.

7.0 Reagents and Standards

Unless otherwise indicated, all reagents must conform to the specifications established by the Committee on Analytical Reagents of the American Chemical Society; where such specifications are not available, use the best available grade.

7.1 Sample Collection. The following reagents are required for sample collection:

7.1.1 Water. Deionized distilled, to conform to ASTM D 1193–77 or 91 (incorporated by reference—see § 61.18), Type 1. If high concentrations of organic matter are not expected to be present, the analyst may eliminate the $KMnO_4$ test for oxidizable organic matter. Use this water in all dilutions and solution preparations.

7.1.2 Nitric Acid, 50 Percent (v/v). Mix equal volumes of concentrated HNO_3 and water, being careful to add the acid to the water slowly.

7.1.3 Silica Gel. Indicating type, 6- to 16-mesh. If previously used, dry at 175 °C (350 °F) for 2 hours. The tester may use new silica gel as received.

7.1.4 Potassium Iodide (KI) Solution, 25 Percent. Dissolve 250 g of KI in water, and dilute to 1 liter.

7.1.5 Iodine Monochloride Stock Solution, 1.0 M. To 800 ml of 25 percent KI solution, add 800 ml of concentrated HCl. Cool to room temperature. With vigorous stirring, slowly add 135 g of potassium iodate (KIO_3), and stir until all free iodine has dissolved. A clear orange-red solution occurs when all the KIO_3 has been added. Cool to room temperature, and dilute to 1800 ml with

water. Keep the solution in amber glass bottles to prevent degradation.

7.1.6 Absorbing Solution, 0.1 M ICl. Dilute 100 ml of the 1.0 M ICl stock solution to 1 liter with water. Keep the solution in amber glass bottles and in darkness to prevent degradation. This reagent is stable for at least two months.

7.2 Sample Preparation and Analysis. The following reagents and standards are required for sample preparation and analysis:

7.2.1 Reagents.

7.2.1.1 Tin (II) Solution. Prepare fresh daily, and keep sealed when not being used. Completely dissolve 20 g of tin (II) chloride (or 25 g of tin (II) sulfate) crystals (Baker Analyzed reagent grade or any other brand that will give a clear solution) in 25 ml of concentrated HCl. Dilute to 250 ml with water. Do not substitute HNO_3, H_2SO_4, or other strong acids for the HCl.

7.2.1.2 Sulfuric Acid, 5 Percent (v/v). Dilute 25 ml of concentrated H_2SO_4 to 500 ml with water.

7.2.2 Standards

7.2.2.1 Hg Stock Solution, 1 mg Hg/ml. Prepare and store all Hg standard solutions in borosilicate glass containers. Completely dissolve 0.1354 g of Hg (II) chloride in 75 ml of water in a 100-ml glass volumetric flask. Add 10 ml of concentrated HNO_3, and adjust the volume to exactly 100 ml with water. Mix thoroughly. This solution is stable for at least one month.

7.2.2.2 Intermediate Hg Standard Solution, 10 µg Hg/ml. Prepare fresh weekly. Pipet 5.0 ml of the Hg stock solution (Section 7.2.2.1) into a 500-ml glass volumetric flask, and add 20 ml of the 5 percent H_2SO_4 solution. Dilute to exactly 500 ml with water. Thoroughly mix the solution.

7.2.2.3 Working Hg Standard Solution, 200 ng Hg/ml. Prepare fresh daily. Pipet 5.0 ml of the intermediate Hg standard solution (Section 7.2.2.2) into a 250-ml volumetric glass flask. Add 10 ml of the 5 percent H_2SO_4 and 2 ml of the 0.1 M ICl absorbing solution taken as a blank (Section 8.7.4.3), and dilute to 250 ml with water. Mix thoroughly.

8.0 Sample Collection, Preservation, Transport, and Storage

Because of the complexity of this method, testers should be trained and experienced with the test procedures to ensure reliable results. Since the amount of Hg that is collected generally is small, the method must be carefully applied to prevent contamination or loss of sample.

8.1 Pretest Preparation. Follow the general procedure outlined in Method 5, Section 8.1, except omit Sections 8.1.2 and 8.1.3.

8.2 Preliminary Determinations. Follow the general procedure outlined in Method 5, Section 8.2, with the exception of the following:

8.2.1 Select a nozzle size based on the range of velocity heads to assure that it is not necessary to change the nozzle size in order to maintain isokinetic sampling rates below 28 liters/min (1.0 cfm).

8.2.2 Perform test runs such that samples are obtained over a period or periods that accurately determine the maximum emissions that occur in a 24-hour period. In the case of cyclic operations, run sufficient tests for the accurate determination of the emissions that occur over the duration of the cycle. A minimum sample time of 2 hours is recommended. In some instances, high Hg or high SO_2 concentrations make it impossible to sample for the desired minimum time. This is indicated by reddening (liberation of free iodine) in the first impinger. In these cases, the sample run may be divided into two or more subruns to ensure that the absorbing solution is not depleted.

8.3 Preparation of Sampling Train.

8.3.1 Clean all glassware (probe, impingers, and connectors) by rinsing with 50 percent HNO_3, tap water, 0.1 M ICl, tap water, and finally deionized distilled water. Place 100 ml of 0.1 M ICl in each of the first three impingers. Take care to prevent the absorbing solution from contacting any greased surfaces. Place approximately 200 g of preweighed silica gel in the fourth impinger. More silica gel may be used, but care should be taken to ensure that it is not entrained and carried out from the impinger during sampling. Place the silica gel container in a clean place for later use in the sample recovery. Alternatively, determine and record the weight of the silica gel plus impinger to the nearest 0.5 g.

8.3.2 Install the selected nozzle using a Viton A O-ring when stack temperatures are less than 260 °C (500 °F). Use a fiberglass string gasket if temperatures are higher. See APTD–0576 (Reference 3 in Method 5) for details. Other connecting systems using either 316 stainless steel or Teflon ferrules may be used. Mark the probe with heat-resistant tape or by some other method to denote the proper distance into the stack or duct for each sampling point.

8.3.3 Assemble the train as shown in Figure 101–1, using (if necessary) a very light coat of silicone grease on all ground glass joints. Grease only the outer portion (see APTD–0576) to avoid the possibility of contamination by the silicone grease.

Note: An empty impinger may be inserted between the third impinger and the silica gel to remove excess moisture from the sample stream.

8.3.4 After the sampling train has been assembled, turn on and set the probe heating system, if applicable, at the desired operating temperature. Allow time for the temperatures to stabilize. Place crushed ice around the impingers.

8.4 Leak-Check Procedures. Follow the leak-check procedures outlined in Method 5, Section 8.4.

8.5 Sampling Train Operation. Follow the general procedure outlined in Method 5, Section 8.5. For each run, record the data required on a data sheet such as the one shown in Figure 101–4.

8.6 Calculation of Percent Isokinetic. Same as Method 5, Section 8.6.

8.7 Sample Recovery. Begin proper cleanup procedure as soon as the probe is removed from the stack at the end of the sampling period.

8.7.1 Allow the probe to cool. When it can be safely handled, wipe off any external particulate matter near the tip of the probe nozzle, and place a cap over it. Do not cap off the probe tip tightly while the sampling train is cooling. Capping would create a vacuum and draw liquid out from the impingers.

8.7.2 Before moving the sampling train to the cleanup site, remove the probe from the train, wipe off the silicone grease, and cap the open outlet of the probe. Be careful not to lose any condensate that might be present. Wipe off the silicone grease from the impinger. Use either ground-glass stoppers, plastic caps, or serum caps to close these openings.

8.7.3 Transfer the probe and impinger assembly to a cleanup area that is clean, protected from the wind, and free of Hg contamination. The ambient air in laboratories located in the immediate vicinity of Hg-using facilities is not normally free of Hg contamination.

8.7.4 Inspect the train before and during disassembly, and note any abnormal conditions. Treat the samples as follows.

8.7.4.1 Container No. 1 (Impingers and Probe).

8.7.4.1.1 Using a graduated cylinder, measure the liquid in the first three impingers to within 1 ml. Record the volume of liquid present (*e.g.,* see Figure 5–6 of Method 5). This information is needed to calculate the moisture content of the effluent gas.

(Use only glass storage bottles and graduated cylinders that have been precleaned as in Section 8.3.1) Place the contents of the first three impingers into a 1000-ml glass sample bottle.

8.7.4.1.2 Taking care that dust on the outside of the probe or other exterior surfaces does not get into the sample, quantitatively recover the Hg (and any condensate) from the probe nozzle, probe fitting, and probe liner as follows: Rinse these components with two 50-ml portions of 0.1 M ICl. Next, rinse the probe nozzle, fitting and liner, and each piece of connecting glassware between the probe liner and the back half of the third impinger with a maximum of 400 ml of water. Add all washings to the 1000-ml glass sample bottle containing the liquid from the first three impingers.

8.7.4.1.3 After all washings have been collected in the sample container, tighten the lid on the container to prevent leakage during shipment to the laboratory. Mark the height of the liquid to determine later whether leakage occurred during transport. Label the container to identify clearly its contents.

8.7.4.2 Container No. 2 (Silica Gel). Same as Method 5, Section 8.7.6.3.

8.7.4.3 Container No. 3 (Absorbing Solution Blank). Place 50 ml of the 0.1 M ICl absorbing solution in a 100-ml sample bottle. Seal the container. Use this blank to prepare the working Hg standard solution (Section 7.2.2.3).

9.0 Quality Control

9.1 Miscellaneous Quality Control Measures.

Section	Quality control measure	Effect
8.4 10.2	Sampling equipment leak-checks and calibration	Ensure accuracy and precision of sampling measurements.
10.5, 10.6	Spectrophotometer calibration	Ensure linearity of spectrophotometer response to standards.
11.3.3	Check for matrix effects	Eliminate matrix effects.

9.2 Volume Metering System Checks. Same as Method 5, Section 9.2.

10.0 Calibration and Standardizations

Note: Maintain a laboratory log of all calibrations.

10.1 Before use, clean all glassware, both new and used, as follows: brush with soap and tap water, liberally rinse with tap water, soak for 1 hour in 50 percent HNO_3, and then rinse with deionized distilled water.

10.2 Sampling Equipment. Calibrate the sampling equipment according to the procedures outlined in the following sections of Method 5: Section 10.1 (Probe Nozzle), Section 10.2 (Pitot Tube Assembly), Section 10.3 (Metering System), Section 10.5 (Temperature Sensors), Section 10.6 (Barometer).

10.3 Aeration System Flow Rate Meter. Assemble the aeration system as shown in Figure 101–5. Set the outlet pressure on the aeration gas cylinder regulator to a minimum pressure of 500 mm Hg (10 psi), and use the flow metering valve and a bubble flowmeter or wet-test meter to obtain a flow rate of 1.5 ± 0.1 liters/min (0.053 ± 0.0035 cfm) through the aeration cell. After the calibration of the aeration system flow rate meter is complete, remove the bubble flowmeter from the system.

10.4 Optical Cell Heating System. Using a 50-ml graduated cylinder, add 50 ml of water to the bottle section of the aeration cell, and attach the bottle section to the bubbler section of the cell. Attach the aeration cell to the optical cell and while aerating at 1.5 ± 0.1 liters/min (0.053 ± 0.0035 cfm), determine the minimum variable transformer setting necessary to prevent condensation of moisture in the optical cell and in the connecting tubing. (This setting should not exceed 20 volts.)

10.5 Spectrophotometer and Recorder.

10.5.1 The Hg response may be measured by either peak height or peak area.

Note: The temperature of the solution affects the rate at which elemental Hg is released from a solution and, consequently, it affects the shape of the absorption curve (area) and the point of maximum absorbance (peak height). Therefore, to obtain reproducible results, bring all solutions to room temperature before use.

10.5.2 Set the spectrophotometer wavelength at 253.7 nm, and make certain the optical cell is at the minimum temperature that will prevent water condensation. Then set the recorder scale as follows: Using a 50-ml graduated cylinder, add 50 ml of water to the aeration cell bottle. Add three drops of Antifoam B to the bottle, and then pipet 5.0 ml of the working Hg standard solution into the aeration cell.

Note: Always add the Hg-containing solution to the aeration cell after the 50 ml of water.

10.5.3 Place a Teflon-coated stirring bar in the bottle. Before attaching the bottle section to the bubbler section of the aeration cell, make certain that (1) the aeration cell exit arm stopcock (Figure 101–3) is closed (so that Hg will not prematurely enter the optical cell when the reducing agent is being added) and (2) there is no flow through the bubbler. If conditions (1) and (2) are met, attach the bottle section to the bubbler section of the aeration cell. Pipet 5 ml of tin (II) reducing solution into the aeration cell through the side arm, and immediately stopper the side arm. Stir the solution for 15 seconds, turn on the recorder, open the aeration cell exit arm stopcock, and immediately initiate aeration with continued stirring. Determine the maximum absorbance of the standard, and set this value to read 90 percent of the recorder full scale.

10.6 Calibration Curve.

10.6.1 After setting the recorder scale, repeat the procedure in Section 10.5 using 0.0-, 1.0-, 2.0-, 3.0-, 4.0-, and 5.0-ml aliquots of the working standard solution (final amount of Hg in the aeration cell is 0, 200, 400, 600, 800, and 1000 ng, respectively). Repeat this procedure on each aliquot size until two consecutive peaks agree within 3 percent of their average value.

Note: To prevent Hg carryover from one sample to another, do not close the aeration cell from the optical cell until the recorder pen has returned to the baseline.)

10.6.2 It should not be necessary to disconnect the aeration gas inlet line from the aeration cell when changing samples. After separating the bottle and bubbler sections of the aeration cell, place the bubbler section into a 600-ml beaker containing approximately 400 ml of water. Rinse the bottle section of the aeration cell with a stream of water to remove all traces of the tin (II) reducing agent. Also, to prevent the loss of Hg before aeration, remove all traces of the reducing agent between samples by washing with water. It will be necessary, however, to wash the aeration cell parts with concentrated HCl if any of the following conditions occur: (1) A white film appears on any inside surface of the aeration cell, (2) the calibration curve changes suddenly, or (3) the replicate samples do not yield reproducible results.

10.6.3 Subtract the average peak height (or peak area) of the blank (0.0-ml aliquot)—which must be less than 2 percent of recorder full scale—from the averaged peak heights of the 1.0-, 2.0-, 3.0-, 4.0-, and 5.0-ml aliquot standards. If the blank absorbance is greater than 2 percent of full-scale, the probable

cause is Hg contamination of a reagent or carry-over of Hg from a previous sample. Prepare the calibration curve by plotting the corrected peak height of each standard solution versus the corresponding final total Hg weight in the aeration cell (in ng), and draw the best fit straight line. This line should either pass through the origin or pass through a point no further from the origin than ± 2 percent of the recorder full scale. If the line does not pass through or very near to the origin, check for nonlinearity of the curve and for incorrectly prepared standards.

11.0 Analytical Procedure

11.1 Sample Loss Check. Check the liquid level in each container to see whether liquid was lost during transport. If a noticeable amount of leakage occurred, either void the sample or use methods subject to the approval of the Administrator to account for the losses.

11.2 Sample Preparation. Treat each sample as follows:

11.2.1 Container No. 1 (Impingers and Probe). Carefully transfer the contents of Container No. 1 into a 1000-ml volumetric flask, and adjust the volume to exactly 1000 ml with water.

11.2.2 Dilutions. Pipet a 2-ml aliquot from the diluted sample from Section 11.2.1 into a 250-ml volumetric flask. Add 10 ml of 5 percent H_2SO_4, and adjust the volume to exactly 250 ml with water. This solution is stable for at least 72 hours.

Note: The dilution factor will be 250/2 for this solution.

11.3 Analysis. Calibrate the analytical equipment and develop a calibration curve as outlined in Sections 10.3 through 10.6.

11.3.1 Mercury Samples. Repeat the procedure used to establish the calibration curve with an appropriately sized aliquot (1 to 5 ml) of the diluted sample (from Section 11.2.2) until two consecutive peak heights agree within 3 percent of their average value. The peak maximum of an aliquot (except the 5-ml aliquot) must be greater than 10 percent of the recorder full scale. If the peak maximum of a 1.0-ml aliquot is off scale on the recorder, further dilute the original source sample to bring the Hg concentration into the calibration range of the spectrophotometer.

11.3.2 Run a blank and standard at least after every five samples to check the spectrophotometer calibration. The peak height of the blank must pass through a point no further from the origin than ±2 percent of the recorder full scale. The difference between the measured concentration of the standard (the product of the corrected peak height and the reciprocal of the least squares slope) and the actual concentration of the standard must be less than 7 percent, or recalibration of the analyzer is required.

11.3.3 Check for Matrix Effects (optional). Use the Method of Standard Additions as follows to check at least one sample from each source for matrix effects on the Hg results. The Method of Standard Additions procedures described on pages 9–4 and 9–5 of the section entitled ''General Information'' of the Perkin Elmer Corporation Atomic Absorption Spectrophotometry Manual, Number 303–0152 (Reference 16 in Section 16.0) are recommended. If the results of the Method of Standard Additions procedure used on the single source sample do not agree to within ±5 percent of the value obtained by the routine atomic absorption analysis, then reanalyze all samples from the source using the Method of Standard Additions procedure.

11.4 Container No. 2 (Silica Gel). Weigh the spent silica gel (or silica gel plus impinger) to the nearest 0.5 g using a balance. (This step may be conducted in the field.)

12.0 Data Analysis and Calculations

Carry out calculations, retaining at least one extra decimal significant figure beyond that of the acquired data. Round off figures only after the final calculation. Other forms of the equations may be used as long as they give equivalent results.

12.1 Average Dry Gas Meter Temperature and Average Orifice Pressure Drop, Dry Gas Volume, Volume of Water Vapor Condensed, Moisture Content, and Isokinetic Variation. Same as Method 5, Sections 12.2 through 12.5 and 12.11, respectively.

12.2 Stack Gas Velocity. Using the data from this test and Equation 2–9 of Method 2, calculate the average stack gas velocity v_s.

12.3 Total Mercury.

12.3.1 For each source sample, correct the average maximum absorbance of the two consecutive samples whose peak heights agree within 3 percent of their average for the contribution of the solution blank (see Section 10.6.3). Use the calibration curve and these corrected averages to determine the final total weight of Hg in ng in the aeration cell for each source sample.

12.3.2 Correct for any dilutions made to bring the sample into the working range of the spectrophotometer. Then calculate the Hg in the original solution, m_{Hg}, as follows:

$$m_{Hg} = \left[C_{Hg(AC)}(DF)(V_f)\left(10^{-3}\right)\right]/S \qquad \text{Eq. 101-1}$$

Where:

$C_{Hg(AC)}$ = Total ng of Hg in aliquot analyzed (reagent blank subtracted).

DF = Dilution factor for the Hg-containing solution (before adding to the aeration cell; *e.g.*, DF = 250/2 if the source samples were diluted as described in Section 11.2.2).

V_f = Solution volume of original sample, 1000 ml for samples diluted as described in Section 11.2.1.

10^{-3} = Conversion factor, µg/ng.

S = Aliquot volume added to aeration cell, ml.

12.4 Mercury Emission Rate. Calculate the daily Hg emission rate, R, using Equation 101–2. For continuous operations, the operating time is equal to 86,400 seconds per day. For cyclic operations, use only the time per day each stack is in operation. The total Hg emission rate from a source will be the summation of results from all stacks.

$$R = \frac{K m_{Hg} V_s A_s \left(86{,}400 \times 10^{-6}\right)}{\left[V_{m(std)} + V_{w(std)}\right]\left(T_s / P_s\right)} \qquad \text{Eq. 101-2}$$

Where:

K_1 = 0.3858 °K/mm Hg for metric units.

K_1 = 17.64 °R/in. Hg for English units.

$K_3 = 10^{-6}$ g/μg for metric units.
= 2.2046 " $\times 10^{-9}$ lb/μg for English units.
P_s = Absolute stack gas pressure, mm Hg (in. Hg).
t = Daily operating time, sec/day.
T_s = Absolute average stack gas temperature, °K (°R).
$V_{m(std)}$ = Dry gas sample volume at standard conditions, scm (scf).
$V_{w(std)}$ = Volume of water vapor at standard conditions, scm (scf).

12.5 Determination of Compliance. Each performance test consists of three repetitions of the applicable test method. For the purpose of determining compliance with an applicable national emission standard, use the average of the results of all repetitions.

13.0 Method Performance

The following estimates are based on collaborative tests, wherein 13 laboratories performed duplicate analyses on two Hg-containing samples from a chlor-alkali plant and on one laboratory-prepared sample of known Hg concentration. The sample concentrations ranged from 2 to 65 μg Hg/ml.

13.1 Precision. The estimated intra-laboratory and inter-laboratory standard deviations are 1.6 and 1.8 μg Hg/ml, respectively.

13.2 Accuracy. The participating laboratories that analyzed a 64.3 μg Hg/ml (in 0.1 M ICl) standard obtained a mean of 63.7 μg Hg/ml.

13.3 Analytical Range. After initial dilution, the range of this method is 0.5 to 120 μg Hg/ml. The upper limit can be extended by further dilution of the sample.

14.0 Pollution Prevention. [Reserved]

15.0 Waste Management. [Reserved]

16.0 References

Same as Method 5, Section 17.0, References 1–3, 5, and 6, with the addition of the following:

1. Determining Dust Concentration in a Gas Stream. ASME Performance Test Code No. 27. New York, NY. 1957.

2. DeVorkin, Howard, *et al.* Air Pollution Source Testing Manual. Air Pollution Control District. Los Angeles, CA. November 1963.

3. Hatch, W.R., and W.I. Ott. Determination of Sub-Microgram Quantities of Mercury by Atomic Absorption Spectrophotometry. Anal. Chem. 40:2085–87. 1968.

4. Mark, L.S. Mechanical Engineers' Handbook. McGraw-Hill Book Co., Inc. New York, NY. 1951.

5. Western Precipitation Division of Joy Manufacturing Co. Methods for Determination of Velocity, Volume, Dust and Mist Content of Gases. Bulletin WP–50. Los Angeles, CA. 1968.

6. Perry, J.H. Chemical Engineers' Handbook. McGraw-Hill Book Co., Inc. New York, NY. 1960.

7. Shigehara, R.T., W.F. Todd, and W.S. Smith. Significance of Errors in Stack Sampling Measurements. Stack Sampling News. *1*(3):6–18. September 1973.

8. Smith, W.S., R.T. Shigehara, and W.F. Todd. A Method of Interpreting Stack Sampling Data. Stack Sampling News. *1*(2):8–17. August 1973.

9. Standard Method for Sampling Stacks for Particulate Matter. In: 1971 Annual Book of ASTM Standards, Part 23. ASTM Designation D 2928–71. Philadelphia, PA 1971.

10. Vennard, J.K. Elementary Fluid Mechanics. John Wiley and Sons, Inc. New York. 1947.

11. Mitchell, W.J. and M.R. Midgett. Improved Procedure for Determining Mercury Emissions from Mercury Cell Chlor-Alkali Plants. J. APCA. *26*:674–677. July 1976.

12. Shigehara, R.T. Adjustments in the EPA Nomograph for Different Pitot Tube Coefficients and Dry Molecular Weights. Stack Sampling News. *2*:4–11. October 1974.

13. Vollaro, R.F. Recommended Procedure for Sample Traverses in Ducts Smaller than 12 Inches in Diameter. U.S. Environmental Protection Agency, Emission Measurement Branch. Research Triangle Park, NC. November 1976.

14. Klein, R. and C. Hach. Standard Additions: Uses and Limitation in Spectrophotometric Measurements. Amer. Lab. *9*:21. 1977.

15. Perkin Elmer Corporation. Analytical Methods for Atomic Absorption Spectrophotometry. Norwalk, Connecticut. September 1976.

BILLING CODE 6560–50–P

17.0 Tables, Diagrams, Flowcharts, and Validation Data

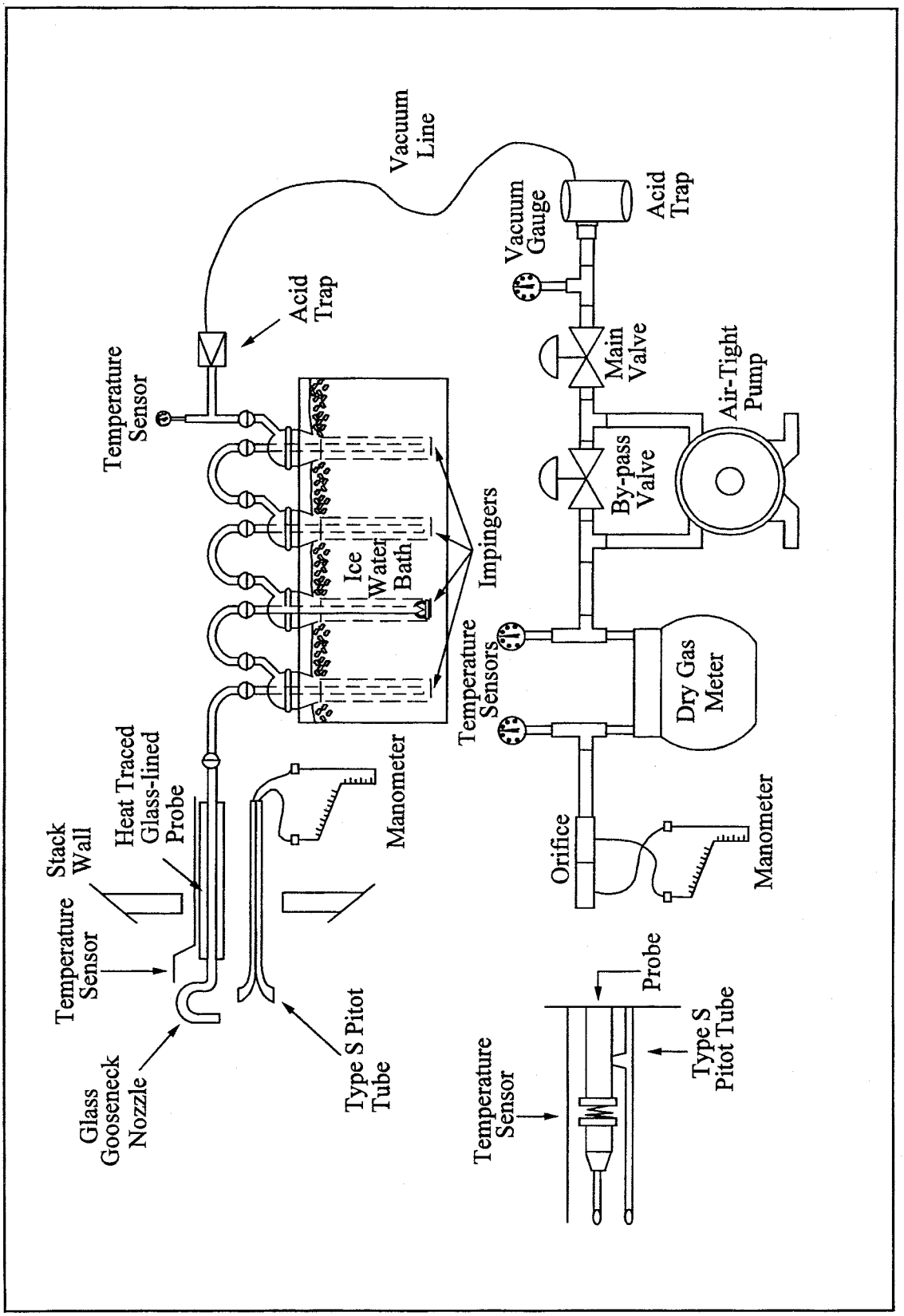

Figure 101-1. Mercury Sampling Train.

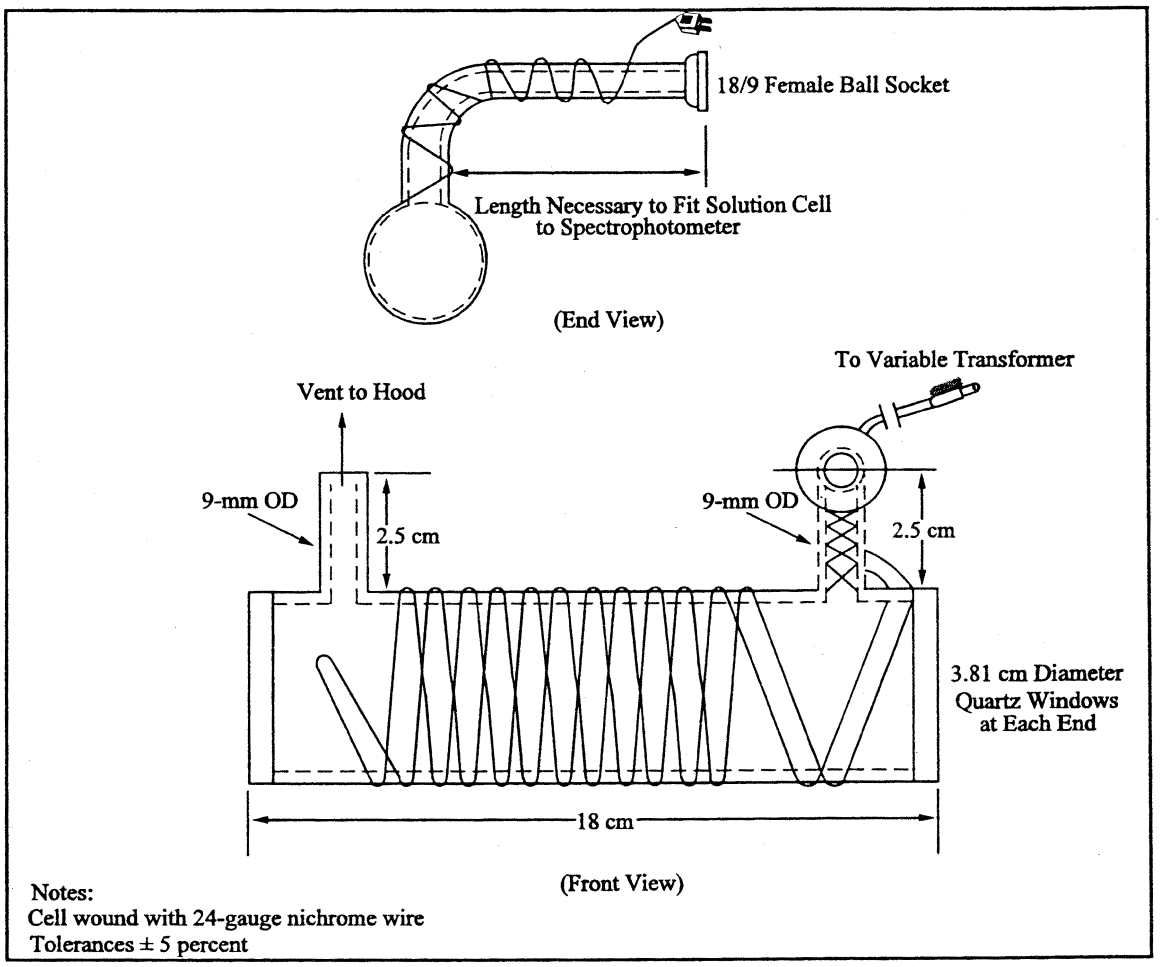

Figure 101-2. Optical Cell.

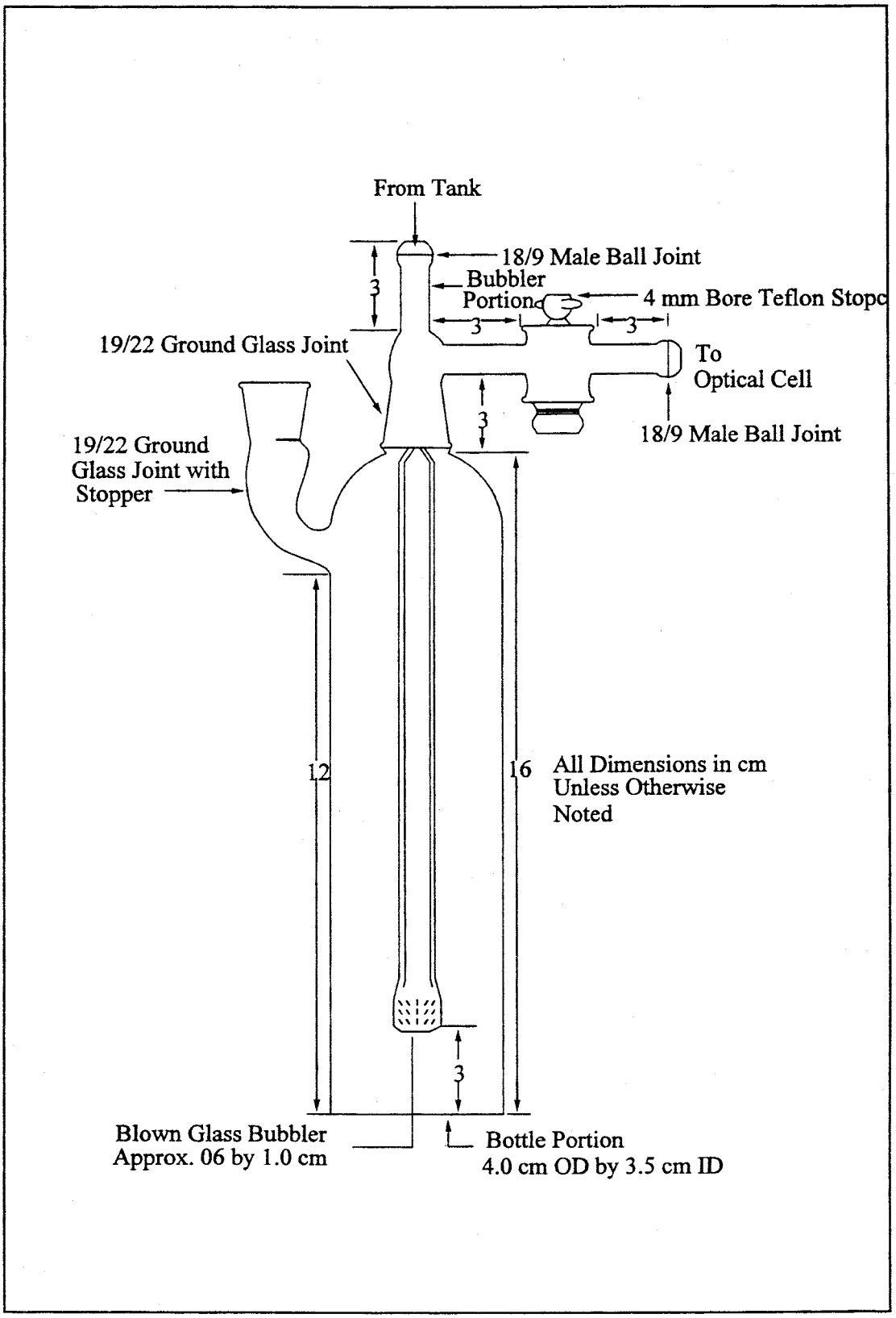

Figure 101-3. Aeration Cell.

Plant _____
Location _____
Operator _____
Date _____
Run No. _____
Sample box No. _____
Filter box No. _____
Meter H@ _____
C factor _____
Pitot tube coefficient, C_p _____

SCHEMATIC OF STACK CROSS SECTION

Ambient temperature _____
Barometric pressure _____
Assumed moisture, % _____
Probe length, (ft.) _____
Nozzle identification No. _____
Average calibrated nozzle diameter, (in.) _____
Probe heater setting _____
Leak rate, (cfm) _____
Probe liner material _____
Static pressure, (in. Hg) _____
Filter No. _____

Traverse point number	Sampling time	Vacuum	Stack temperature	Velocity head	Pressure differential across orifice meter	Gas meter reading	Gas sample temperature at dry gas meter		Filter holder* temperature	Temperature of gas leaving condenser or last impinger
							Inlet	Outlet		
	min.	(in.Hg)	(T_s) (°F)	(ΔP_s) (in. H_2O)	(in. H_2O)	(ft^3)	(°F)	(°F)	(°F)	(°F)
Total							Avg.	Avg.		
Average							Avg.			

* If Applicable

Figure 101-4. Mercury Field Data.

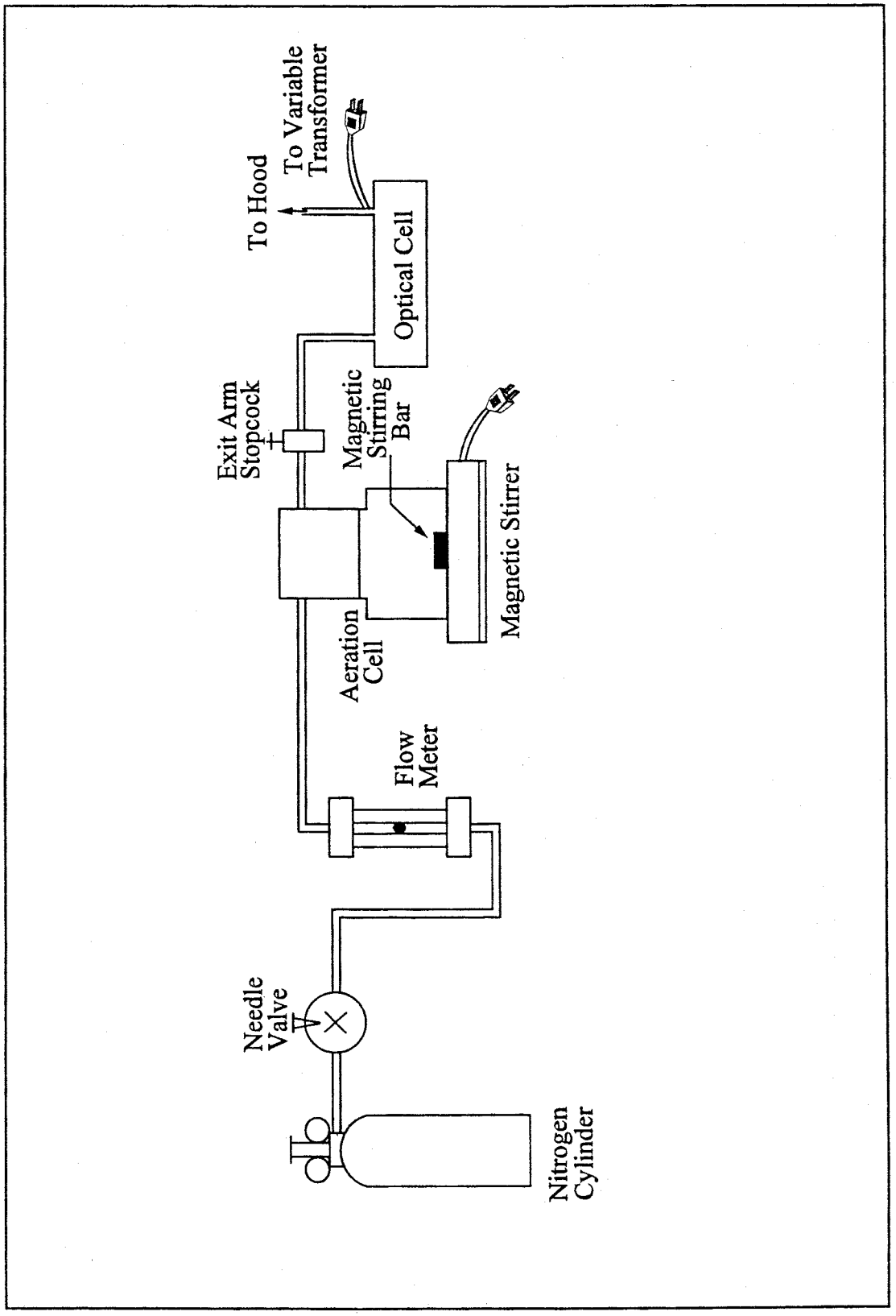

Figure 101-5. Schematic of Aeration System.

Method 101A—Determination of Particulate and Gaseous Mercury Emissions From Sewage Sludge Incinerators

Note: This method does not include all of the specifications (*e.g.,* equipment and supplies) and procedures (*e.g.,* sampling and analytical) essential to its performance. Some material is incorporated by reference from methods in Appendix A to 40 CFR Part 60 and in this part. Therefore, to obtain reliable results, persons using this method should also have a thorough knowledge of at least the following additional test methods: Methods 1, Method 2, Method 3, and Method 5 of Part 60 (Appendix A), and Method 101 Part 61 (Appendix B).

1.0 Scope and Application

1.1 Analytes.

Analyte	CAS No.	Sensitivity
Mercury (Hg)	7439–97–6	Dependent upon spectrophotometer and recorder.

1.2 Applicability. This method is applicable for the determination of Hg emissions from sewage sludge incinerators and other sources as specified in an applicable subpart of the regulations.

1.3 Data Quality Objectives. Adherence to the requirements of this method will enhance the quality of the data obtained from air pollutant sampling methods.

2.0 Summary of Method

2.1 Particulate and gaseous Hg emissions are withdrawn isokinetically from the source and are collected in acidic potassium permanganate ($KMnO_4$) solution. The Hg collected (in the mercuric form) is reduced to elemental Hg, which is then aerated from the solution into an optical cell and measured by atomic absorption spectrophotometry.

3.0 Definitions. [Reserved]

4.0 Interferences

4.1 Sample Collection. Excessive oxidizable organic matter in the stack gas prematurely depletes the $KMnO_4$ solution and thereby prevents further collection of Hg.

4.2 Analysis. Condensation of water vapor on the optical cell windows causes a positive interference.

5.0 Safety

5.1 Disclaimer. This method may involve hazardous materials, operations, and equipment. This test method may not address all of the safety problems associated with its use. It is the responsibility of the user of this test method to establish appropriate safety and health practices and determine the applicability of regulatory limitations prior to performing this test method.

5.2 Corrosive Reagents. The following reagents are hazardous. Personal protective equipment and safe procedures are useful in preventing chemical splashes. If contact occurs, immediately flush with copious amounts of water for at least 15 minutes. Remove clothing under shower and decontaminate. Treat residual chemical burns as thermal burns.

5.2.1 Hydrochloric Acid (HCl). Highly toxic. Vapors are highly irritating to eyes, skin, nose, and lungs, causing severe damage. May cause bronchitis, pneumonia, or edema of lungs. Exposure to concentrations of 0.13 to 0.2 percent can be lethal to humans in a few minutes. Provide ventilation to limit exposure. Reacts with metals, producing hydrogen gas.

5.2.2 Nitric Acid (HNO_3). Highly corrosive to eyes, skin, nose, and lungs. Vapors cause bronchitis, pneumonia, or edema of lungs. Reaction to inhalation may be delayed as long as 30 hours and still be fatal. Provide ventilation to limit exposure. Strong oxidizer. Hazardous reaction may occur with organic materials such as solvents.

5.2.3 Sulfuric acid (H_2SO_4). Rapidly destructive to body tissue. Will cause third degree burns. Eye damage may result in blindness. Inhalation may be fatal from spasm of the larynx, usually within 30 minutes. May cause lung tissue damage with edema. 3 mg/m^3 will cause lung damage in uninitiated. 1 mg/m^3 for 8 hours will cause lung damage or, in higher concentrations, death. Provide ventilation to limit inhalation. Reacts violently with metals and organics.

5.3 Chlorine Evolution. Hydrochloric acid reacts with $KMnO_4$ to liberate chlorine gas. Although this is a minimal concern when small quantities of HCl (5–10 ml) are used in the impinger rinse, a potential safety hazard may still exist. At sources that emit higher concentrations of oxidizable materials (*e.g.,* power plants), more HCl may be required to remove the larger amounts of brown deposit formed in the impingers. In such cases, the potential safety hazards due to sample container pressurization are greater, because of the larger volume of HCl rinse added to the recovered sample. These hazards are eliminated by storing and analyzing the HCl impinger wash separately from the permanganate impinger sample.

6.0 Equipment and Supplies

6.1 Sample Collection and Sample Recovery. Same as Method 101, Sections 6.1 and 6.2, respectively, with the following exceptions:

6.1.1 Probe Liner. Same as in Method 101, Section 6.1.2, except that if a filter is used ahead of the impingers, the probe heating system must be used to minimize the condensation of gaseous Hg.

6.1.2 Filter Holder (Optional). Borosilicate glass with a rigid stainless-steel wire-screen filter support (do not use glass frit supports) and a silicone rubber or Teflon gasket, designed to provide a positive seal against leakage from outside or around the filter. The filter holder must be equipped with a filter heating system capable of maintaining a temperature around the filter holder of 120 ± 14 °C (248 ± 25 °F) during sampling to minimize both water and gaseous Hg condensation. A filter may also be used in cases where the stream contains large quantities of particulate matter.

6.2 Sample Analysis. Same as Method 101, Section 6.3, with the following additions and exceptions:

6.2.1 Volumetric Pipets. Class A; 1-, 2-, 3-, 4-, 5-, 10-, and 20-ml.

6.2.2 Graduated Cylinder. 25-ml.

6.2.3 Steam Bath.

6.2.4 Atomic Absorption Spectrophotometer or Equivalent. Any atomic absorption unit with an open sample presentation area in which to mount the optical cell is suitable. Instrument settings recommended by the particular manufacturer should be followed. Instruments designed specifically for the measurement of mercury using the cold-vapor technique are commercially available and may be substituted for the atomic absorption spectrophotometer.

6.2.5 Optical Cell. Alternatively, a heat lamp mounted above the cell or a moisture trap installed upstream of the cell may be used.

6.2.6 Aeration Cell. Alternatively, aeration cells available with commercial cold vapor instrumentation may be used.

6.2.7 Aeration Gas Cylinder. Nitrogen, argon, or dry, Hg-free air, equipped with a single-stage regulator. Alternatively, aeration may be provided

by a peristaltic metering pump. If a commercial cold vapor instrument is used, follow the manufacturer's recommendations.

7.0 Reagents and Standards

Unless otherwise indicated, it is intended that all reagents conform to the specifications established by the Committee on Analytical Reagents of the American Chemical Society, where such specifications are available; otherwise, use the best available grade.

7.1 Sample Collection and Recovery. The following reagents are required for sample collection and recovery:

7.1.1 Water. Deionized distilled, to conform to ASTM D 1193–77 or 91 Type 1. If high concentrations of organic matter are not expected to be present, the analyst may eliminate the $KMnO_4$ test for oxidizable organic matter. Use this water in all dilutions and solution preparations.

7.1.2 Nitric Acid, 50 Percent (V/V). Mix equal volumes of concentrated HNO_3 and water, being careful to add the acid to the water slowly.

7.1.3 Silica Gel. Indicating type, 6 to 16 mesh. If previously used, dry at 175 °C (350 °F) for 2 hours. New silica gel may be used as received.

7.1.4 Filter (Optional). Glass fiber filter, without organic binder, exhibiting at least 99.95 percent efficiency on 0.3-µm dioctyl phthalate smoke particles. The filter in cases where the gas stream contains large quantities of particulate matter, but blank filters should be analyzed for Hg content.

7.1.5 Sulfuric Acid, 10 Percent (V/V). Carefully add and mix 100 ml of concentrated H_2S_{O4} to 900 ml of water.

7.1.6 Absorbing Solution, 4 Percent $KMnO_4$ (W/V). Prepare fresh daily. Dissolve 40 g of $KMnO_4$ in sufficient 10 percent H_2SO_4 to make 1 liter. Prepare and store in glass bottles to prevent degradation.

7.1.7 Hydrochloric Acid, 8 N. Carefully add and mix 67 ml of concentrated HCl to 33 ml of water.

7.2 Sample Analysis. The following reagents and standards are required for sample analysis:

7.2.1 Water. Same as in Section 7.1.1.

7.2.2 Tin (II) Solution. Prepare fresh daily, and keep sealed when not being used. Completely dissolve 20 g of tin (II) chloride (or 25 g of tin (II) sulfate) crystals (Baker Analyzed reagent grade or any other brand that will give a clear solution) in 25 ml of concentrated HCl. Dilute to 250 ml with water. Do not substitute HNO_3, $H2SO_4$, or other strong acids for the HCl.

7.2.3 Sodium Chloride-Hydroxylamine Solution. Dissolve 12 g of sodium chloride and 12 g of hydroxylamine sulfate (or 12 g of hydroxylamine hydrochloride) in water and dilute to 100 ml.

7.2.4 Hydrochloric Acid, 8 N. Same as Section 7.1.7.

7.2.5 Nitric Acid, 15 Percent (V/V). Carefully add 15 ml HNO_3 to 85 ml of water.

7.2.6 Antifoam B Silicon Emulsion. J.T. Baker Company (or equivalent).

7.2.7 Mercury Stock Solution, 1 mg Hg/ml. Prepare and store all Hg standard solutions in borosilicate glass containers. Completely dissolve 0.1354 g of Hg (II) chloride in 75 ml of water. Add 10 ml of concentrated HNO_3, and adjust the volume to exactly 100 ml with water. Mix thoroughly. This solution is stable for at least one month.

7.2.8 Intermediate Hg Standard Solution, 10 µg/ml. Prepare fresh weekly. Pipet 5.0 ml of the Hg stock solution (Section 7.2.7) into a 500 ml volumetric flask, and add 20 ml of 15 percent HNO_3 solution. Adjust the volume to exactly 500 ml with water. Thoroughly mix the solution.

7.2.9 Working Hg Standard Solution, 200 ng Hg/ml. Prepare fresh daily. Pipet 5.0 ml from the ''Intermediate Hg Standard Solution'' (Section 7.2.8) into a 250-ml volumetric flask. Add 5 ml of 4 percent $KMnO_4$ absorbing solution and 5 ml of 15 percent HNO_3. Adjust the volume to exactly 250 ml with water. Mix thoroughly.

7.2.10 Potassium Permanganate, 5 Percent (W/V). Dissolve 5 g of $KMnO_4$ in water and dilute to 100 ml.

7.2.11 Filter. Whatman No. 40, or equivalent.

8.0 Sample Collection, Preservation, Transport, and Storage

Same as Method 101, Section 8.0, with the exception of the following:

8.1 Preliminary Determinations. Same as Method 101, Section 8.2, except that the liberation of free iodine in the first impinger due to high Hg or sulfur dioxide concentrations is not applicable. In this method, high oxidizable organic content may make it impossible to sample for the desired minimum time. This problem is indicated by the complete bleaching of the purple color of the $KMnO_4$ solution. In cases where an excess of water condensation is encountered, collect two runs to make one sample, or add an extra impinger in front of the first impinger (also containing acidified $KMnO_4$ solution).

8.2 Preparation of Sampling Train. Same as Method 101, Section 8.3, with the exception of the following:

8.2.1 In this method, clean all the glass components by rinsing with 50 percent HNO_3, tap water, 8 N HCl, tap water, and finally with deionized distilled water. Then place 50 ml of absorbing solution in the first impinger and 100 ml in each of the second and third impingers.

8.2.2 If a filter is used, use a pair of tweezers to place the filter in the filter holder. Be sure to center the filter, and place the gasket in the proper position to prevent the sample gas stream from bypassing the filter. Check the filter for tears after assembly is completed. Be sure also to set the filter heating system at the desired operating temperature after the sampling train has been assembled.

8.3 Sampling Train Operation. In addition to the procedure outlined in Method 101, Section 8.5, maintain a temperature around the filter (if applicable) of 120 ± 14 °C (248 ± 25 °F).

8.4 Sample Recovery. Same as Method 101, Section 8.7, with the exception of the following:

8.4.1 Transfer the probe, impinger assembly, and (if applicable) filter assembly to the cleanup area.

8.4.2 Treat the sample as follows:

8.4.2.1 Container No. 1 (Impinger, Probe, and Filter Holder) and, if applicable, Container No. 1A (HCl rinse).

8.4.2.1.1 Using a graduated cylinder, measure the liquid in the first three impingers to within 1 ml. Record the volume of liquid present (*e.g.*, see Figure 5–6 of Method 5). This information is needed to calculate the moisture content of the effluent gas. (Use only graduated cylinder and glass storage bottles that have been precleaned as in Section 8.2.1.) Place the contents of the first three impingers (four if an extra impinger was added as described in Section 8.1) into a 1000-ml glass sample bottle labeled Container No. 1.

Note: If a filter is used, remove the filter from its holder as outlined under Section 8.4.3.

8.4.2.1.2 Taking care that dust on the outside of the probe or other exterior surfaces does not get into the sample, quantitatively recover the Hg (and any condensate) from the probe nozzle, probe fitting, probe liner, front half of the filter holder (if applicable), and impingers as follows: Rinse these components with a total of 400 ml (350 ml if an extra impinger was added as described in Section 8.1) of fresh absorbing solution, carefully assuring removal of all loose particulate matter from the impingers; add all washings to the 1000 ml glass sample bottle. To remove any residual brown deposits on the glassware following the

permanganate rinse, rinse with approximately 100 ml of water, carefully assuring removal of all loose particulate matter from the impingers. Add this rinse to Container No. 1.

8.4.2.1.3 If no visible deposits remain after this water rinse, do not rinse with 8 N HCl. If deposits do remain on the glassware after the water rinse, wash impinger walls and stems with 25 ml of 8 N HCl, and place the wash in a separate container labeled Container No. 1A as follows: Place 200 ml of water in a sample container labeled Container No. 1A. Wash the impinger walls and stem with the HCl by turning the impinger on its side and rotating it so that the HCl contacts all inside surfaces. Pour the HCl wash carefully with stirring into Container No. 1A.

8.4.2.1.4 After all washings have been collected in the appropriate sample container(s), tighten the lid(s) on the container(s) to prevent leakage during shipment to the laboratory. Mark the height of the fluid level to allow subsequent determination of whether leakage has occurred during transport. Label each container to identify its contents clearly.

8.4.3 Container No. 2 (Silica Gel). Same as Method 5, Section 8.7.6.3.

8.4.4 Container No. 3 (Filter). If a filter was used, carefully remove it from the filter holder, place it in a 100-ml glass sample bottle, and add 20 to 40 ml of absorbing solution. If it is necessary to fold the filter, be sure that the particulate cake is inside the fold. Carefully transfer to the 100-ml sample bottle any particulate matter and filter fibers that adhere to the filter holder gasket by using a dry Nylon bristle brush and a sharp-edged blade. Seal the container. Label the container to identify its contents clearly. Mark the height of the fluid level to allow subsequent determination of whether leakage has occurred during transport.

8.4.5 Container No. 4 (Filter Blank). If a filter was used, treat an unused filter from the same filter lot as that used for sampling according to the procedures outlined in Section 8.4.4.

8.4.6 Container No. 5 (Absorbing Solution Blank). Place 650 ml of 4 percent $KMnO_4$ absorbing solution in a 1000-ml sample bottle. Seal the container.

8.4.7 Container No. 6 (HCl Rinse Blank). Place 200 ml of water in a 1000-ml sample bottle, and add 25 ml of 8 N HCl carefully with stirring. Seal the container. Only one blank sample per 3 runs is required.

9.0 Quality Control

9.1 Miscellaneous Quality Control Measures.

Section	Quality control measure	Effect
8.0, 10.0	Sampling equipment leak-checks and calibration	Ensure accuracy and precision of sampling measurements.
10.2	Spectrophotometer calibration	Ensure linearity of spectrophotometer response to standards.
11.3.3	Check for matrix effects	Eliminate matrix effects.

9.2 Volume Metering System Checks. Same as Method 5, Section 9.2.

10.0 Calibration and Standardization

Same as Method 101, Section 10.0, with the following exceptions:

10.1 Optical Cell Heating System Calibration. Same as in Method 101, Section 10.4, except use a-25 ml graduated cylinder to add 25 ml of water to the bottle section of the aeration cell.

10.2 Spectrophotometer and Recorder Calibration.

10.2.1 The Hg response may be measured by either peak height or peak area.

Note: The temperature of the solution affects the rate at which elemental Hg is released from a solution and, consequently, it affects the shape of the absorption curve (area) and the point of maximum absorbance (peak height). To obtain reproducible results, all solutions must be brought to room temperature before use.

10.2.2 Set the spectrophotometer wave length at 253.7 nm, and make certain the optical cell is at the minimum temperature that will prevent water condensation. Then set the recorder scale as follows: Using a 25-ml graduated cylinder, add 25 ml of water to the aeration cell bottle. Add three drops of Antifoam B to the bottle, and then pipet 5.0 ml of the working Hg standard solution into the aeration cell.

Note: Always add the Hg-containing solution to the aeration cell after the 25 ml of water.

10.2.3 Place a Teflon-coated stirring bar in the bottle. Add 5 ml of absorbing solution to the aeration bottle, and mix well. Before attaching the bottle section to the bubbler section of the aeration cell, make certain that (1) the aeration cell exit arm stopcock (Figure 101–3 of Method 101) is closed (so that Hg will not prematurely enter the optical cell when the reducing agent is being added) and (2) there is no flow through the bubbler. If conditions (1) and (2) are met, attach the bottle section to the bubbler section of the aeration cell. Add sodium chloride-hydroxylamine in 1 ml increments until the solution is colorless. Now add 5 ml of tin (II) solution to the aeration bottle through the side arm, and immediately stopper the side arm. Stir the solution for 15 seconds, turn on the recorder, open the aeration cell exit arm stopcock, and immediately initiate aeration with continued stirring. Determine the maximum absorbance of the standard, and set this value to read 90 percent of the recorder full scale.

11.0 Analytical Procedure

11.1 Sample Loss Check. Check the liquid level in each container to see if liquid was lost during transport. If a noticeable amount of leakage occurred, either void the sample or use methods subject to the approval of the Administrator to account for the losses.

11.2 Sample Preparation. Treat sample containers as follows:

11.2.1 Containers No. 3 and No. 4 (Filter and Filter Blank).

11.2.1.1 If a filter is used, place the contents, including the filter, of Containers No. 3 and No. 4 in separate 250-ml beakers, and heat the beakers on a steam bath until most of the liquid has evaporated. Do not heat to dryness. Add 20 ml of concentrated HNO_3 to the beakers, cover them with a watch glass, and heat on a hot plate at 70 °C (160 °F) for 2 hours. Remove from the hot plate.

11.2.1.2 Filter the solution from digestion of the Container No. 3 contents through Whatman No. 40 filter paper, and save the filtrate for addition to the Container No. 1 filtrate as described in Section 11.2.2. Discard the filter paper.

11.2.1.3 Filter the solution from digestion of the Container No. 4 contents through Whatman No. 40 filter paper, and save the filtrate for addition to Container No. 5 filtrate as described in Section 11.2.3 below. Discard the filter paper.

11.2.2 Container No. 1 (Impingers, Probe, and Filter Holder) and, if applicable, No. 1A (HCl rinse).

11.2.2.1 Filter the contents of Container No. 1 through Whatman No. 40 filter paper into a 1 liter volumetric flask to remove the brown manganese

dioxide (MnO_2) precipitate. Save the filter for digestion of the brown MnO_2 precipitate. Add the sample filtrate from Container No. 3 to the 1-liter volumetric flask, and dilute to volume with water. If the combined filtrates are greater than 1000 ml, determine the volume to the nearest ml and make the appropriate corrections for blank subtractions. Mix thoroughly. Mark the filtrate as analysis Sample No. A.1 and analyze for Hg within 48 hr of the filtration step. Place the saved filter, which was used to remove the brown MnO_2 precipitate, into an appropriate sized container. In a laboratory hood, add 25 ml of 8 N HCl to the filter and allow to digest for a minimum of 24 hours at room temperature.

11.2.2.2 Filter the contents of Container 1A through Whatman No. 40 filter paper into a 500-ml volumetric flask. Then filter the digestate of the brown MnO_2 precipitate from Container No. 1 through Whatman No. 40 filter paper into the same 500-ml volumetric flask, and dilute to volume with water. Mark this combined 500 ml dilute solution as analysis Sample No. A.2. Discard the filters.

11.2.3 Container No. 5 (Absorbing Solution Blank) and No. 6 (HCl Rinse Blank).

11.2.3.1 Treat Container No. 5 as Container No. 1 (as described in Section 11.2.2), except substitute the filter blank filtrate from Container No. 4 for the sample filtrate from Container No. 3, and mark as Sample A.1 Blank.

11.2.3.2 Treat Container No. 6 as Container No. 1A, (as described in Section 11.2.2, except substitute the filtrate from the digested blank MnO_2 precipitate for the filtrate from the digested sample MnO_2 precipitate, and mark as Sample No. A.2 Blank.

Note: When analyzing samples A.1 Blank and HCl A.2 Blank, always begin with 10 ml aliquots. This applies specifically to blank samples.

11.3 Analysis. Calibrate the analytical equipment and develop a calibration curve as outlined in Section 10.0.

11.3.1 Mercury Samples. Then repeat the procedure used to establish the calibration curve with appropriately sized aliquots (1 to 10 ml) of the samples (from Sections 11.2.2 and 11.2.3) until two consecutive peak heights agree within 3 percent of their average value. If the 10 ml sample is below the detectable limit, use a larger aliquot (up to 20 ml), but decrease the volume of water added to the aeration cell accordingly to prevent the solution volume from exceeding the capacity of the aeration bottle. If the peak maximum of a 1.0 ml aliquot is off scale, further dilute the original sample to bring the Hg concentration into the calibration range of the spectrophotometer. If the Hg content of the absorbing solution and filter blank is below the working range of the analytical method, use zero for the blank.

11.3.2 Run a blank and standard at least after every five samples to check the spectrophotometer calibration; recalibrate as necessary.

11.3.3 Check for Matrix Effects (optional). Same as Method 101, Section 11.3.3.

12.0 Data Analysis and Calculations

Note: Carry out calculations, retaining at least one extra decimal significant figure beyond that of the acquired data. Round off figures only after the final calculation. Other forms of the equations may be used as long as they give equivalent results.

12.1 Nomenclature.

$C_{(fltr)Hg}$ = Total ng of Hg in aliquot of $KMnO_4$ filtrate and HNO_3 digestion of filter analyzed (aliquot of analysis Sample No. A.1).

$C_{(fltr\ blk)Hg}$ = Total ng of Hg in aliquot of $KMnO_4$ blank and HNO_3 digestion of blank filter analyzed (aliquot of analysis Sample No. A.1 blank).

$C_{(HC1\ blk)Hg}$ = Total ng of Hg analyzed in aliquot of the 500-ml analysis Sample No. HCl A.2 blank.

$C_{(HCl)Hg}$ = Total ng of Hg analyzed in the aliquot from the 500-ml analysis Sample No. HCl A.2.

DF = Dilution factor for the HCl-digested Hg-containing solution, Analysis Sample No. ''HCl A.2.''

DF_{blk} = Dilution factor for the HCl-digested Hg containing solution, Analysis Sample No. ''HCl A.2 blank.'' (Refer to sample No. ''HCl A.2'' dilution factor above.)

$m_{(fltr)Hg}$ = Total blank corrected µg of Hg in $KMnO_4$ filtrate and HNO_3 digestion of filter sample.

$m_{(HCl)Hg}$ = Total blank corrected µg of Hg in HCl rinse and HCl digestate of filter sample.

m_{Hg} = Total blank corrected Hg content in each sample, µg.

S = Aliquot volume of sample added to aeration cell, ml.

S_{blk} = Aliquot volume of blank added to aeration cell, ml.

$Vf_{(blk)}$ = Solution volume of blank sample, 1000 ml for samples diluted as described in Section 11.2.2.

$V_{f(fltr)}$ = Solution volume of original sample, normally 1000 ml for samples diluted as described in Section 11.2.2.

$V_{f(HCl)}$ = Solution volume of original sample, 500 ml for samples diluted as described in Section 11.2.1.

10^{-3} = Conversion factor, µg/ng.

12.2 Average Dry Gas Meter Temperature and Average Orifice Pressure Drop, Dry Gas Volume, Volume of Water Vapor Condensed, Moisture Content, Isokinetic Variation, and Stack Gas Velocity and Volumetric Flow Rate. Same as Method 5, Sections 12.2 through 12.5, 12.11, and 12.12, respectively.

12.3 Total Mercury.

12.3.1 For each source sample, correct the average maximum absorbance of the two consecutive samples whose peak heights agree within 3 percent of their average for the contribution of the blank. Use the calibration curve and these corrected averages to determine the final total weight of Hg in ng in the aeration cell for each source sample.

12.3.2 Correct for any dilutions made to bring the sample into the working range of the spectrophotometer.

$$m_{(HCl)Hg} = \frac{\left[C_{(HCl)Hg}DF\right]}{S} - \frac{\left[C_{(HCl\,blk)Hg}DF_{blk}\right]}{S_{blk}} Vf_{(HC1)}\left(10^{-3}\right) \qquad \text{Eq. 101A-1}$$

Note: This dilution factor applies only to the intermediate dilution steps, since the original sample volume [$(V_f)_{HCL}$] of ''HCl A.2'' has been factored out in the equation along with the sample aliquot (S). In Eq. 101A–1, the sample aliquot, S, is introduced directly into the aeration cell for analysis according to the procedure outlined in Section 11.3.1. A dilution factor is required only if it is necessary to bring the sample into the analytical instrument's calibration range.

Note: The maximum allowable blank subtraction for the HCl is the lesser of the two following values: (1) the actual blank measured value (analysis Sample No. HCl A.2 blank), or (2) 5% of the Hg content in the combined HCl rinse and digested sample (analysis Sample No. HCl A.2).

$$m_{(fltr)Hg} = \frac{\left[C_{(fltr)Hg} DF\, V_{f(fltr)}\right]}{S} - \frac{\left[C_{(fltr\ blk)Hg} DF_{blk}\, V_{f(blk)}\right]}{S_{blk}} \qquad \text{Eq. 101A-2}$$

Note: The maximum allowable blank subtraction for the HCl is the lesser of the two following values: (1) the actual blank measured value (analysis Sample No. ''A.1 blank''), or (2) 5% of the Hg content in the filtrate (analysis Sample No. ''A.1'').

$$m_{Hg} = m_{(HCl)Hg} + m_{(fltr)Hg} \qquad \text{Eq. 101A-3}$$

12.3 Mercury Emission Rate. Same as Method 101, Section 12.3.

12.4 Determination of Compliance. Same as Method 101, Section 12.4.

13.0 Method Performance

13.1 Precision. Based on eight paired-train tests, the intra-laboratory standard deviation was estimated to be 4.8 μg/ml in the concentration range of 50 to 130 μg/m^3.

13.2 Bias. [Reserved]

13.3 Range. After initial dilution, the range of this method is 20 to 800 ng Hg/ml. The upper limit can be extended by further dilution of the sample.

14.0 Pollution Prevention [Reserved]

15.0 Waste Management [Reserved]

16.0 References

Same as Section 16.0 of Method 101, with the addition of the following:

1. Mitchell, W.J., *et al.* Test Methods to Determine the Mercury Emissions from Sludge Incineration Plants. U.S. Environmental Protection Agency. Research Triangle Park, NC. Publication No. EPA–600/4–79–058. September 1979.

2. Wilshire, Frank W., *et al.* Reliability Study of the U.S. EPA's Method 101A—Determination of Particulate and Gaseous Mercury Emissions. U.S. Environmental Protection Agency. Research Triangle Park, NC. Report No. 600/D–31/219 AREAL 367, NTIS Acc No. PB91–233361.

3. Memorandum from William J. Mitchell to Roger T. Shigehara discussing the potential safety hazard in Section 7.2 of Method 101A. February 28, 1990.

17.0 Tables, Diagrams, Flowcharts, And Validation Data [Reserved]

Method 102—Determination of Particulate and Gaseous Mercury Emissions From Chlor-Alkali Plants (Hydrogen Streams)

Note: This method does not include all of the specifications (*e.g.,* equipment and supplies) and procedures (*e.g.,* sampling and analytical) essential to its performance. Some material is incorporated by reference from other methods in this part and in Appendix A to 40 CFR Part 60. Therefore, to obtain reliable results, persons using this method should have a thorough knowledge of at least the following additional test methods: Method 1, Method 2, Method 3, Method 5, and Method 101.

1.0 Scope and Application

1.1 Analytes.

Analyte	CAS No.	Sensitivity
Mercury (Hg)	7439–97–6	Dependent upon recorder and spectrophotometer.

1.2 Applicability. This method is applicable for the determination of Hg emissions, including both particulate and gaseous Hg, from chlor-alkali plants and other sources (as specified in the regulations) where the carrier-gas stream in the duct or stack is principally hydrogen.

1.3 Data Quality Objectives. Adherence to the requirements of this method will enhance the quality of the data obtained from air pollutant sampling methods.

2.0 Summary of Method

2.1 Particulate and gaseous Hg emissions are withdrawn isokinetically from the source and collected in acidic iodine monochloride (ICl) solution. The Hg collected (in the mercuric form) is reduced to elemental Hg, which is then aerated from the solution into an optical cell and measured by atomic absorption spectrophotometry.

3.0 Definitions [Reserved]

4.0 Interferences

Same as Method 101, Section 4.2.

5.0 Safety

5.1 Disclaimer. This method may involve hazardous materials, operations, and equipment. This test method may not address all of the safety problems associated with its use. It is the responsibility of the user of this test method to establish appropriate safety and health practices and determine the applicability of regulatory limitations prior to performing this test method.

5.2 Corrosive Reagents. Same as Method 101, Section 5.2.

5.3 Explosive Mixtures. The sampler must conduct the source test under conditions of utmost safety because hydrogen and air mixtures are explosive. Since the sampling train essentially is leakless, attention to safe operation can be concentrated at the inlet and outlet. If a leak does occur, however, remove the meter box cover to avoid a possible explosive mixture. The following specific precautions are recommended:

5.3.1 Operate only the vacuum pump during the test. The other electrical equipment, *e.g.,* heaters, fans, and timers, normally are not essential to the success of a hydrogen stream test.

5.3.2 Seal the sample port to minimize leakage of hydrogen from the stack.

5.3.3 Vent sampled hydrogen at least 3 m (10 ft) away from the train. This can be accomplished by attaching a 13-mm (0.50-in.) ID Tygon tube to the exhaust from the orifice meter.

Note: A smaller ID tubing may cause the orifice meter calibration to be erroneous. Take care to ensure that the exhaust line is not bent or pinched.

6.0 Equipment and Supplies

Same as Method 101, Section 6.0, with the exception of the following:

6.1 Probe Heating System. Do not use, unless otherwise specified.

6.2 Glass Fiber Filter. Do not use, unless otherwise specified.

7.0 Reagents and Standards

Same as Method 101, Section 7.0.

8.0 Sample Collection, Preservation, Transport, and Storage

Same as Method 101, Section 8.0, with the exception of the following:

8.1 Setting of Isokinetic Rates.

8.1.1 If a nomograph is used, take special care in the calculation of the molecular weight of the stack gas and in the setting of the nomograph to maintain isokinetic conditions during sampling (Sections 8.1.1.1 through 8.1.1.3 below).

8.1.1.1 Calibrate the meter box orifice. Use the techniques described in APTD–0576 (see Reference 9 in Section 17.0 of Method 5). Calibration of the orifice meter at flow conditions that simulate the conditions at the source is suggested. Calibration should either be done with hydrogen or with some other gas having similar Reynolds Number so that there is similarity between the Reynolds Numbers during calibration and during sampling.

8.1.1.2 The nomograph described in APTD–0576 cannot be used to calculate the C factor because the nomograph is designed for use when the stack gas dry molecular weight is 29 ± 4. Instead, the following calculation should be made to determine the proper C factor:

$$C = 0.00154 \Delta H@ C_p^{\,2} T_m \left(P_s / P_m\right) \frac{\left(1 - B_{ws}\right)^2}{\left(1 - B_{ws}\right) + 18 B_{ws}} \qquad \text{Eq. 102-1}$$

Where:

B_{ws} = Fraction by volume of water vapor in the stack gas.

C_p = Pitot tube calibration coefficient, dimensionless.

M_d = Dry molecular weight of stack gas, lb/lb-mole.

P_s = Absolute pressure of stack gas, in. Hg.

P_m = Absolute pressure of gas at the meter, in. Hg.

T_m = Absolute temperature of gas at the orifice, °R.

$\Delta H_@$ = Meter box calibration factor obtained in Section 8.1.1.1, in. H_2O.

0.00154 = (in. H_2O/°R).

Note: This calculation is left in English units, and is not converted to metric units because nomographs are based on English units.

8.1.1.3 Set the calculated C factor on the operating nomograph, and select the proper nozzle diameter and K factor as specified in APTD–0576. If the C factor obtained in Section 8.1.1.2 exceeds the values specified on the existing operating nomograph, expand the C scale logarithmically so that the values can be properly located.

8.1.2 If a calculator is used to set isokinetic rates, it is suggested that the isokinetic equation presented in Reference 13 in Section 17.0 of Method 101 be consulted.

8.2 Sampling in Small (<12-in. Diameter) Stacks. When the stack diameter (or equivalent diameter) is less than 12 inches, conventional pitot tube-probe assemblies should not be used. For sampling guidelines, see Reference 14 in Section 17.0 of Method 101.

9.0 Quality Control

Same as Method 101, Section 9.0.

10.0 Calibration and Standardizations

Same as Method 101, Section 10.0.

11.0 Analytical Procedure

Same as Method 101, Section 11.0.

12.0 Data Analysis and Calculations

Same as Method 101, Section 12.0.

13.0 Method Performance

Same as Method 101, Section 13.0.

13.1 Analytical Range. After initial dilution, the range of this method is 0.5 to 120 μg Hg/ml. The upper limit can be extended by further dilution of the sample.

14.0 Pollution Prevention. [Reserved]

15.0 Waste Management. [Reserved]

16.0 References

Same as Method 101, Section 16.0.

17.0 Tables, Diagrams, Flowcharts, and Validation Data. [Reserved]

Method 103—Beryllium Screening Method

1.0 Scope and Application

1.1 Analytes.

Analyte	CAS No.	Sensitivity
Beryllium (Be)	7440–41–7	Dependent upon analytical procedure used.

1.2 Applicability. This procedure details guidelines and requirements for methods acceptable for use in determining Be emissions in ducts or stacks at stationary sources.

1.3 Data Quality Objectives. Adherence to the requirements of this method will enhance the quality of the data obtained from air pollutant sampling methods.

2.0 Summary of Method

2.1 Particulate Be emissions are withdrawn isokinetically from three points in a duct or stack and are collected on a filter. The collected sample is analyzed for Be using an appropriate technique.

3.0 Definitions. [Reserved]

4.0 Interferences. [Reserved]

5.0 Safety

5.1 Disclaimer. This method may involve hazardous materials, operations, and equipment. This test method may not address all of the safety problems associated with its use. It is the responsibility of the user of this test method to establish appropriate safety and health practices and determine the applicability of regulatory limitations prior to performing this test method.

5.2 Hydrochloric Acid (HCl). Highly corrosive and toxic. Vapors are highly irritating to eyes, skin, nose, and lungs, causing severe damage. May cause bronchitis, pneumonia, or edema of lungs. Exposure to concentrations of 0.13 to 0.2 percent can be lethal to humans in a few minutes. Provide ventilation to limit exposure. Reacts with metals, producing hydrogen gas. Personal protective equipment and safe procedures are useful in preventing chemical splashes. If contact occurs, immediately flush with copious amounts of water at least 15 minutes. Remove clothing under shower and decontaminate. Treat residual chemical burn as thermal burn.

6.0 Equipment and Supplies

6.1 Sample Collection. A schematic of the required sampling train configuration is shown in Figure 103–1 in Section 17.0. The essential components of the train are as follows:

6.1.1 Nozzle. Stainless steel, or equivalent, with sharp, tapered leading edge.

6.1.2 Probe. Sheathed borosilicate or quartz glass tubing.

6.1.3 Filter. Millipore AA, or equivalent, with appropriate filter holder that provides a positive seal against leakage from outside or around the filter. It is suggested that a Whatman 41, or equivalent, be placed immediately against the back side of the Millipore filter as a guard against breakage of the Millipore. Include the backup filter in the analysis. To be equivalent, other filters shall exhibit at least 99.95 percent efficiency (0.05 percent penetration) on 0.3 micron dioctyl phthalate smoke particles, and be amenable to the Be analysis procedure. The filter efficiency tests shall be conducted in accordance with ASTM D 2986–71, 78, 95a (incorporated by reference—see § 61.18). Test data from the supplier's quality control program are sufficient for this purpose.

6.1.4 Meter-Pump System. Any system that will maintain isokinetic sampling rate, determine sample volume, and is capable of a sampling rate of greater than 14 lpm (0.5 cfm).

6.2 Measurement of Stack Conditions. The following equipment is used to measure stack conditions:

6.2.1 Pitot Tube. Type S, or equivalent, with a constant coefficient (±5 percent) over the working range.

6.2.2 Inclined Manometer, or Equivalent. To measure velocity head to ±10 percent of the minimum value.

6.2.3 Temperature Measuring Device. To measure stack temperature to ±1.5 percent of the minimum absolute stack temperature.

6.2.4 Pressure Measuring Device. To measure stack pressure to ±2.5 mm Hg (0.1 in. Hg).

6.2.5 Barometer. To measure atmospheric pressure to ±2.5 mm Hg (0.1 in. Hg).

6.2.6 Wet and Dry Bulb Thermometers, Drying Tubes, Condensers, or Equivalent. To determine stack gas moisture content to ±1 percent.

6.3 Sample Recovery.

6.3.1 Probe Cleaning Equipment. Probe brush or cleaning rod at least as long as probe, or equivalent. Clean cotton balls, or equivalent, should be used with the rod.

6.3.2 Leakless Glass Sample Bottles. To contain sample.

6.4 Analysis. All equipment necessary to perform an atomic absorption, spectrographic, fluorometric, chromatographic, or equivalent analysis.

7.0 Reagents and Standards

7.1 Sample Recovery.

7.1.1 Water. Deionized distilled, to conform to ASTM D 1193–77, 91 (incorporated by reference—see § 61.18), Type 3.

7.1.2 Acetone. Reagent grade.

7.1.3 Wash Acid, 50 Percent (V/V) Hydrochloric Acid (HCl). Mix equal volumes of concentrated HCl and water, being careful to add the acid slowly to the water.

7.2 Analysis. Reagents and standards as necessary for the selected analytical procedure.

8.0 Sample Collection, Preservation, Transport, and Storage

Guidelines for source testing are detailed in the following sections. These guidelines are generally applicable; however, most sample sites differ to some degree and temporary alterations such as stack extensions or expansions often are required to insure the best possible sample site. Further, since Be is hazardous, care should be taken to minimize exposure. Finally, since the total quantity of Be to be collected is quite small, the test must be carefully conducted to prevent contamination or loss of sample.

8.1 Selection of a Sampling Site and Number of Sample Runs. Select a suitable sample site that is as close as practicable to the point of atmospheric emission. If possible, stacks smaller than one foot in diameter should not be sampled.

8.1.1 Ideal Sampling Site. The ideal sampling site is at least eight stack or duct diameters downstream and two diameters upstream from any flow disturbance such as a bend, expansion or contraction. For rectangular cross sections, use Equation 103–1 in Section 12.2 to determine an equivalent diameter, D_e.

8.1.2 Alternate Sampling Site. Some sampling situations may render the above sampling site criteria impractical. In such cases, select an alternate site no less than two diameters downstream and one-half diameter upstream from any point of flow disturbance. Additional sample runs are recommended at any sample site not meeting the criteria of Section 8.1.1.

8.1.3 Number of Sample Runs Per Test. Three sample runs constitute a test. Conduct each run at one of three different points. Select three points that proportionately divide the diameter, or are located at 25, 50, and 75 percent of the diameter from the inside wall. For horizontal ducts, sample on a vertical line through the centroid. For rectangular ducts, sample on a line through the centroid and parallel to a side. If additional sample runs are performed per Section 8.1.2, proportionately divide the duct to accommodate the total number of runs.

8.2 Measurement of Stack Conditions. Using the equipment described in Section 6.2, measure the stack gas pressure, moisture, and temperature to determine the molecular weight of the stack gas. Sound engineering estimates may be made in lieu of direct measurements. Describe the basis for such estimates in the test report.

8.3 Preparation of Sampling Train.

8.3.1 Assemble the sampling train as shown in Figure 103–1. It is recommended that all glassware be precleaned by soaking in wash acid for two hours.

8.3.2 Leak check the sampling train at the sampling site. The leakage rate should not be in excess of 1 percent of the desired sample rate.

8.4 Sampling Train Operation.

8.4.1 For each run, measure the velocity at the selected sampling point. Determine the isokinetic sampling rate. Record the velocity head and the required sampling rate. Place the nozzle at the sampling point with the tip pointing directly into the gas stream. Immediately start the pump and adjust the flow to isokinetic conditions. At the conclusion of the test, record the sampling rate. Again measure the velocity head at the sampling point. The required isokinetic rate at the end of the period should not have deviated more than 20 percent from that originally calculated. Describe the reason for any deviation beyond 20 percent in the test report.

8.4.2 Sample at a minimum rate of 14 liters/min (0.5 cfm). Obtain samples over such a period or periods of time as are necessary to determine the maximum emissions which would occur in a 24-hour period. In the case of cyclic operations, perform sufficient sample runs so as to allow determination or calculation of the emissions that occur over the duration of the cycle. A minimum sampling time of two hours per run is recommended.

8.5 Sample Recovery.

8.5.1 It is recommended that all glassware be precleaned as in Section 8.3. Sample recovery should also be performed in an area free of possible Be contamination. When the sampling train is moved, exercise care to prevent breakage and contamination. Set aside a portion of the acetone used in the sample recovery as a blank for analysis. The total amount of acetone used should be measured for accurate blank correction. Blanks can be eliminated if

prior analysis shows negligible amounts.

8.5.2 Remove the filter (and backup filter, if used) and any loose particulate matter from filter holder, and place in a container.

8.5.3 Clean the probe with acetone and a brush or long rod and cotton balls. Wash into the container with the filter. Wash out the filter holder with acetone, and add to the same container.

9.0 Quality Control. [Reserved]

10.0 Calibration and Standardization

10.1 Sampling Train. As a procedural check, compare the sampling rate regulation with a dry gas meter, spirometer, rotameter (calibrated for prevailing atmospheric conditions), or equivalent, attached to the nozzle inlet of the complete sampling train.

10.2 Analysis. Perform the analysis standardization as suggested by the manufacturer of the instrument, or the procedures for the analytical method in use.

11.0 Analytical Procedure

Make the necessary preparation of samples and analyze for Be. Any currently acceptable method (e.g., atomic absorption, spectrographic, fluorometric, chromatographic) may be used.

12.0 Data Analysis and Calculations

12.1 Nomenclature.

A_s(avg) = Stack area, m^2 (ft^2).
L = Length.
R = Be emission rate, g/day.
V_s(avg) = Average stack gas velocity, m/sec (ft/sec).
V_{total} = Total volume of gas sampled, m^3 (ft^3).
W = Width.
W_t = Total weight of Be collected, mg.
10^{-6} = Conversion factor, g/μg.
86,400 = Conversion factor, sec/day.

12.2 Calculate the equivalent diameter, De, for a rectangular cross section as follows:

$$D_e = \frac{2 \cdot L \cdot W}{L + W} \qquad \text{Eq. 103-1}$$

12.3 Calculate the Be emission rate, R, in g/day for each stack using Equation 103–2. For cyclic operations, use only the time per day each stack is in operation. The total Be emission rate from a source is the summation of results from all stacks.

$$R = \frac{W_t V_{s(avg)} A_s (86{,}400)\left(10^{-6}\right)}{V_{total}} \qquad \text{Eq. 103-2}$$

12.4 Test Report. Prepare a test report that includes as a minimum: A detailed description of the sampling train used, results of the procedural check described in Section 10.1 with all data and calculations made, all pertinent data taken during the test, the basis for any estimates made, isokinetic sampling calculations, and emission results. Include a description of the test site, with a block diagram and brief description of the process, location of the sample points in the stack cross section, and stack dimensions and distances from any point of disturbance.

13.0 Method Performance. [Reserved]

14.0 Pollution Prevention. [Reserved]

15.0 Waste Management. [Reserved]

16.0 References. [Reserved]

BILLING CODE 6560–50–P

17.0 Tables, Diagrams, Flow Charts, and Validation Data

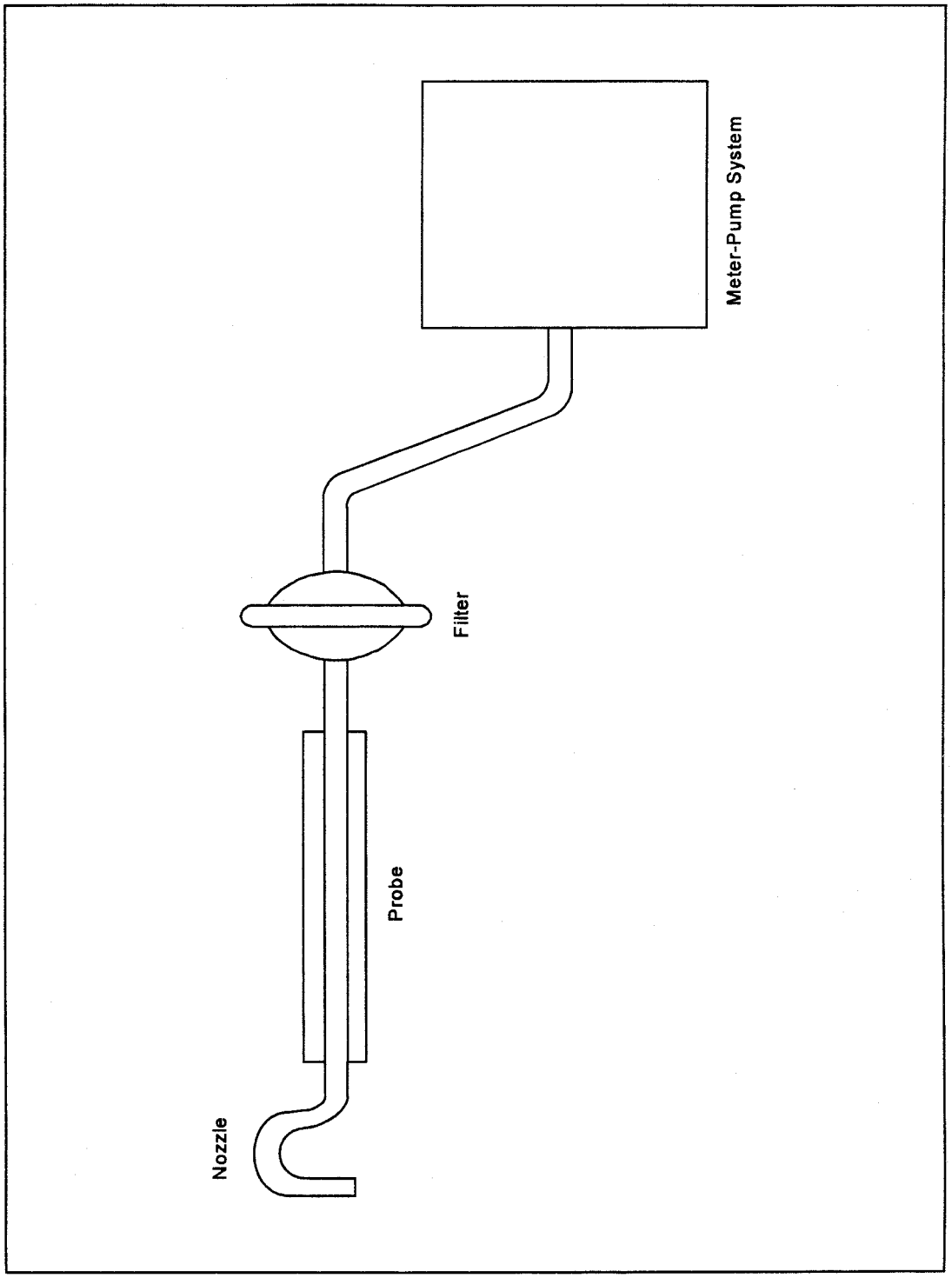

Figure 103-1. Beryllium Screening Method Sampling Train Schematic.

BILLING CODE 6560–50–C

Method 104—Determination of Beryllium Emissions From Stationary Sources

Note: This method does not include all of the specifications (*e.g.*, equipment and supplies) and procedures (*e.g.*, sampling and analytical) essential to its performance. Some material is incorporated by reference from methods in Appendix A to 40 CFR part 60. Therefore, to obtain reliable results, persons using this method should have a thorough knowledge of at least the following additional test methods: Method 1, Method 2, Method 3, and Method 5 in Appendix A, Part 60.

1.0 Scope and Application

1.1 Analytes.

Analyte	CAS No.	Sensitivity
Beryllium (Be)	7440–41–7	Dependent upon recorder and spectrophotometer.

1.2 Applicability. This method is applicable for the determination of Be emissions in ducts or stacks at stationary sources. Unless otherwise specified, this method is not intended to apply to gas streams other than those emitted directly to the atmosphere without further processing.

1.3 Data Quality Objectives. Adherences to the requirements of this method will enhance the quality of the data obtained from air pollutant sampling methods.

2.0 Summary of Method

2.1 Particulate and gaseous Be emissions are withdrawn isokinetically from the source and are collected on a glass fiber filter and in water. The collected sample is digested in an acid solution and is analyzed by atomic absorption spectrophotometry.

3.0 Definitions [Reserved]

4.0 Interferences

4.1 Matrix Effects. Analysis for Be by flame atomic absorption spectrophotometry is sensitive to the chemical composition and to the physical properties (*e.g.*, viscosity, pH) of the sample. Aluminum and silicon in particular are known to interfere when present in appreciable quantities. The analytical procedure includes (optionally) the use of the Method of Standard Additions to check for these matrix effects, and sample analysis using the Method of Standard Additions if significant matrix effects are found to be present (see Reference 2 in Section 16.0).

5.0 Safety

5.1 Disclaimer. This method may involve hazardous materials, operations, and equipment. This test method may not address all of the safety problems associated with its use. It is the responsibility of the user of this test method to establish appropriate safety and health practices and determine the applicability of regulatory limitations prior to performing this test method.

5.2 Corrosive reagents. The following reagents are hazardous. Personal protective equipment and safe procedures are useful in preventing chemical splashes. If contact occurs, immediately flush with copious amounts of water at least 15 minutes. Remove clothing under shower and decontaminate. Treat residual chemical burn as thermal burn.

5.2.1 Hydrochloric Acid (HC_l). Highly toxic. Vapors are highly irritating to eyes, skin, nose, and lungs, causing severe damage. May cause bronchitis, pneumonia, or edema of lungs. Exposure to concentrations of 0.13 to 0.2 percent can be lethal to humans in a few minutes. Provide ventilation to limit exposure. Reacts with metals, producing hydrogen gas.

5.2.2 Hydrogen Peroxide (H_2O_2). Irritating to eyes, skin, nose, and lungs.

5.2.3 Nitric Acid (HNO_3). Highly corrosive to eyes, skin, nose, and lungs. Vapors cause bronchitis, pneumonia, or edema of lungs. Reaction to inhalation may be delayed as long as 30 hours and still be fatal. Provide ventilation to limit exposure. Strong oxidizer. Hazardous reaction may occur with organic materials such as solvents.

5.2.4 Sodium Hydroxide (NaOH). Causes severe damage to eyes and skin. Inhalation causes irritation to nose, throat, and lungs. Reacts exothermically with limited amounts of water.

5.3 Beryllium is hazardous, and precautions should be taken to minimize exposure.

6.0 Equipment and Supplies

6.1 Sample Collection. Same as Method 5, Section 6.1, with the exception of the following:

6.1.1 Sampling Train. Same as Method 5, Section 6.1.1, with the exception of the following:

6.1.2 Probe Liner. Borosilicate or quartz glass tubing. A heating system capable of maintaining a gas temperature of 120 ± 14 °C (248 ± 25 °F) at the probe exit during sampling to prevent water condensation may be used.

Note: Do not use metal probe liners.

6.1.3 Filter Holder. Borosilicate glass, with a glass frit filter support and a silicone rubber gasket. Other materials of construction (*e.g.*, stainless steel, Teflon, Viton) may be used, subject to the approval of the Administrator. The holder design shall provide a positive seal against leakage from the outside or around the filter. The holder shall be attached immediately at the outlet of the probe. A heating system capable of maintaining the filter at a minimum temperature in the range of the stack temperature may be used to prevent condensation from occurring.

6.1.4 Impingers. Four Greenburg-Smith impingers connected in series with leak-free ground glass fittings or any similar leak-free noncontaminating fittings. For the first, third, and fourth impingers, use impingers that are modified by replacing the tip with a 13 mm-ID (0.5 in.) glass tube extending to 13 mm (0.5 in.) from the bottom of the flask may be used.

6.2 Sample Recovery. The following items are needed for sample recovery:

6.2.1 Probe Cleaning Rod. At least as long as probe.

6.2.2 Glass Sample Bottles. Leakless, with Teflon-lined caps, 1000 ml.

6.2.3 Petri Dishes. For filter samples, glass or polyethylene, unless otherwise specified by the Administrator.

6.2.4 Graduated Cylinder. 250 ml.

6.2.5 Funnel and Rubber Policeman. To aid in transfer of silica gel to container; not necessary if silica gel is weighed in the field.

6.2.6 Funnel. Glass, to aid in sample recovery.

6.2.7 Plastic Jar. Approximately 300 ml.

6.3 Analysis. The following items are needed for sample analysis:

6.3.1 Atomic Absorption Spectrophotometer. Perkin-Elmer 303, or equivalent, with nitrous oxide/acetylene burner.

6.3.2 Hot Plate.

6.3.3 Perchloric Acid Fume Hood.

7.0 Reagents and Standards

Note: Unless otherwise indicated, it is intended that all reagents conform to the specifications established by the Committee on Analytical Reagents of the American Chemical Society, where such specifications are available; otherwise, use the best available grade.

7.1 Sample Collection. Same as Method 5, Section 7.1, including deionized distilled water conforming to ASTM D 1193–77 or 91 (incorporated by reference—see § 61.18), Type 3. The Millipore AA filter is recommended.

7.2 Sample Recovery. Same as Method 5 in Appendix A, Part 60, Section 7.2, with the addition of the following:

7.2.1 Wash Acid, 50 Percent (V/V) Hydrochloric Acid (HCl). Mix equal volumes of concentrated HCl and water, being careful to add the acid slowly to the water.

7.3 Sample Preparation and Analysis. The following reagents and standards and standards are needed for sample preparation and analysis:

7.3.1 Water. Same as in Section 7.1.

7.3.2. Perchloric Acid ($HClO_4$). Concentrated (70 percent V/V).

7.3.3 Nitric Acid (HNO_3). Concentrated.

7.3.4 Beryllium Powder. Minimum purity 98 percent.

7.3.5 Sulfuric Acid (H_2SO_4) Solution, 12 N. Dilute 33 ml of concentrated H_2SO_4 to 1 liter with water.

7.3.6 Hydrochloric Acid Solution, 25 Percent HCl (V/V).

7.3.7 Stock Beryllium Standard Solution, 10 µg Be/ml. Dissolve 10.0 mg of Be in 80 ml of 12 N H_2SO_4 in a 1000-ml volumetric flask. Dilute to volume with water. This solution is stable for at least one month. Equivalent strength Be stock solutions may be prepared from Be salts such as $BeCl_2$ and $Be(NO_3)_2$ (98 percent minimum purity).

7.3.8 Working Beryllium Standard Solution, 1 µg Be/ml. Dilute a 10 ml aliquot of the stock beryllium standard solution to 100 ml with 25 percent HCl solution to give a concentration of 1 mg/ml. Prepare this dilute stock solution fresh daily.

8.0 Sample Collection, Preservation, Transport, and Storage

The amount of Be that is collected is generally small, therefore, it is necessary to exercise particular care to prevent contamination or loss of sample.

8.1 Pretest Preparation. Same as Method 5, Section 8.1, except omit Section 8.1.3.

8.2 Preliminary Determinations. Same as Method 5, Section 8.2, with the exception of the following:

8.2.1 Select a nozzle size based on the range of velocity heads to assure that it is not necessary to change the nozzle size in order to maintain isokinetic sampling rates below 28 liters/min (1.0 cfm).

8.2.2 Obtain samples over a period or periods of time that accurately determine the maximum emissions that occur in a 24-hour period. In the case of cyclic operations, perform sufficient sample runs for the accurate determination of the emissions that occur over the duration of the cycle. A minimum sample time of 2 hours per run is recommended.

8.3 Preparation of Sampling Train. Same as Method 5, Section 8.3, with the exception of the following:

8.3.1 Prior to assembly, clean all glassware (probe, impingers, and connectors) by first soaking in wash acid for 2 hours, followed by rinsing with water.

8.3.2 Save a portion of the water for a blank analysis.

8.3.3 Procedures relating to the use of metal probe liners are not applicable.

8.3.4 Probe and filter heating systems are needed only if water condensation is a problem. If this is the case, adjust the heaters to provide a temperature at or above the stack temperature. However, membrane filters such as the Millipore AA are limited to about 107 °C (225 °F). If the stack gas is in excess of about 93 °C (200 °F), consideration should be given to an alternate procedure such as moving the filter holder downstream of the first impinger to insure that the filter does not exceed its temperature limit. After the sampling train has been assembled, turn on and set the probe heating system, if applicable, at the desired operating temperature. Allow time for the temperatures to stabilize. Place crushed ice around the impingers.

Note: An empty impinger may be inserted between the third impinger and the silica gel to remove excess moisture from the sample stream.

8.4 Leak Check Procedures, Sampling Train Operation, and Calculation of Percent Isokinetic. Same as Method 5, Sections 8.4, 8.5, and 8.6, respectively.

8.5 Sample Recovery. Same as Method 5, Section 8.7, except treat the sample as follows: Transfer the probe and impinger assembly to a cleanup area that is clean, protected from the wind, and free of Be contamination. Inspect the train before and during this assembly, and note any abnormal conditions. Treat the sample as follows: Disconnect the probe from the impinger train.

8.5.1 Container No. 1. Same as Method 5, Section 8.7.6.1.

8.5.2 Container No. 2. Place the contents (measured to 1 ml) of the first three impingers into a glass sample bottle. Use the procedures outlined in Section 8.7.6.2 of Method 5, where applicable, to rinse the probe nozzle, probe fitting, probe liner, filter holder, and all glassware between the filter holder and the back half of the third impinger with water. Repeat this procedure with acetone. Place both water and acetone rinse solutions in the sample bottle with the contents of the impingers.

8.5.3 Container No. 3. Same as Method 5, Section 8.7.6.3.

8.6 Blanks.

8.6.1 Water Blank. Save a portion of the water as a blank. Take 200 ml directly from the wash bottle being used and place it in a plastic sample container labeled ''H_2O blank.''

8.6.2 Filter. Save two filters from each lot of filters used in sampling. Place these filters in a container labeled ''filter blank.''

8.7 Post-test Glassware Rinsing. If an additional test is desired, the glassware can be carefully double rinsed with water and reassembled. However, if the glassware is out of use more than 2 days, repeat the initial acid wash procedure.

9.0 Quality Control

9.1 Miscellaneous Quality Control Measures.

Section	Quality control measure	Effect
8.4, 10.1	Sampling equipment leak checks and calibration	Ensure accuracy and precision of sampling measurements.
10.2	Spectrophotometer calibration	Ensure linearity of spectrophotometer response to standards.
11.5	Check for matrix effects	Eliminate matrix effects.
11.6	Audit sample analysis	Evaluate analyst's technique and standards preparation.

9.2 Volume Metering System Checks. Same as Method 5, Section 9.2.

10.0 Calibration and Standardization

Note: Maintain a laboratory log of all calibrations.

10.1 Sampling Equipment. Same as Method 5, Section 10.0.

10.2 Preparation of Standard Solutions. Pipet 1, 3, 5, 8, and 10 ml of the 1.0 µg Be/ml working standard solution into separate 100 ml volumetric flasks, and dilute to the mark with water. The total amounts of Be in these standards are 1, 3, 5, 8, and 10 µg, respectively.

10.3 Spectrophotometer and Recorder. The Be response may be measured by either peak height or peak area. Analyze an aliquot of the 10-µg standard at 234.8 nm using a nitrous oxide/acetylene flame. Determine the maximum absorbance of the standard, and set this value to read 90 percent of the recorder full scale.

10.4 Calibration Curve.

10.4.1 After setting the recorder scale, analyze an appropriately sized aliquot of each standard and the BLANK (see Section 11) until two consecutive peaks agree within 3 percent of their average value.

10.4.3 Subtract the average peak height (or peak area) of the blank—which must be less than 2 percent of recorder full scale—from the averaged peak heights of the standards. If the blank absorbance is greater than 2 percent of full-scale, the probable cause is Be contamination of a reagent or carry-over of Be from a previous sample. Prepare the calibration curve by plotting the corrected peak height of each standard solution versus the corresponding total Be weight in the standard (in µg).

10.5 Spectrophotometer Calibration Quality Control. Calculate the least squares slope of the calibration curve. The line must pass through the origin or through a point no further from the origin than ±2 percent of the recorder full scale. Multiply the corrected peak height by the reciprocal of the least squares slope to determine the distance each calibration point lies from the theoretical calibration line. The difference between the calculated concentration values and the actual concentrations (i.e., 1, 3, 5, 8, and 10 µg Be) must be less than 7 percent for all standards.

11.0 Analytical Procedure

11.1 Sample Loss Check. Prior to analysis, check the liquid level in Container No. 2. Note on the analytical data sheet whether leakage occurred during transport. If a noticeable amount of leakage occurred, either void the sample or take steps, subject to the approval of the Administrator, to adjust the final results.

11.2 Glassware Cleaning. Before use, clean all glassware according to the procedure of Section 8.3.1.

11.3 Sample Preparation. The digestion of Be samples is accomplished in part in concentrated $HClO_4$.

Note: The sample must be heated to light brown fumes after the initial HNO3 addition; otherwise, dangerous perchlorates may result from the subsequent $HClO_4$ digestion. $HClO_4$ should be used only under a hood.

11.3.1 Container No. 1. Transfer the filter and any loose particulate matter from Container No. 1 to a 150-ml beaker. Add 35 ml concentrated HNO_3. To oxidize all organic matter, heat on a hotplate until light brown fumes are evident. Cool to room temperature, and add 5 ml 12 N H_2SO_4 and 5 ml concentrated $HClO_4$.

11.3.2 Container No. 2. Place a portion of the water and acetone sample into a 150 ml beaker, and put on a hotplate. Add portions of the remainder as evaporation proceeds and evaporate to dryness. Cool the residue, and add 35 ml concentrated HNO_3. To oxidize all organic matter, heat on a hotplate until light brown fumes are evident. Cool to room temperature, and add 5 ml 12 N H_2SO_4 and 5 ml concentrated $HClO_4$. Then proceed with step 11.3.4.

11.3.3 Final Sample Preparation. Add the sample from Section 11.3.2 to the 150-ml beaker from Section 11.3.1. Replace on a hotplate, and evaporate to dryness in a $HClO_4$ hood. Cool the residue to room temperature, add 10.0 ml of 25 percent V/V HCl, and mix to dissolve the residue.

11.3.4 Filter and Water Blanks. Cut each filter into strips, and treat each filter individually as directed in Section 11.3.1. Treat the 200-ml water blank as directed in Section 11.3.2. Combine and treat these blanks as directed in Section 11.3.3.

11.4 Spectrophotometer Preparation. Turn on the power; set the wavelength, slit width, and lamp current; and adjust the background corrector as instructed by the manufacturer's manual for the particular atomic absorption spectrophotometer. Adjust the burner and flame characteristics as necessary.

11.5 Analysis. Calibrate the analytical equipment and develop a calibration curve as outlined in Sections 10.4 and 10.5.

11.5.1 Beryllium Samples. Repeat the procedure used to establish the calibration curve with an appropriately sized aliquot of each sample (from Section 11.3.3) until two consecutive peak heights agree within 3 percent of their average value. The peak height of each sample must be greater than 10 percent of the recorder full scale. If the peak height of the sample is off scale on the recorder, further dilute the original source sample to bring the Be concentration into the calibration range of the spectrophotometer.

11.5.2 Run a blank and standard at least after every five samples to check the spectrophotometer calibration. The peak height of the blank must pass through a point no further from the origin than ±2 percent of the recorder full scale. The difference between the measured concentration of the standard (the product of the corrected peak height and the reciprocal of the least squares slope) and the actual concentration of the standard must be less than 7 percent, or recalibration of the analyzer is required.

11.5.3 Check for Matrix Effects (optional). Use the Method of Standard Additions (see Reference 2 in Section 16.0) to check at least one sample from each source for matrix effects on the Be results. If the results of the Method of Standard Additions procedure used on the single source sample do not agree to within 5 percent of the value obtained by the routine atomic absorption analysis, then reanalyze all samples from the source using the Method of Standard Additions procedure.

11.6 Container No. 2 (Silica Gel). Weigh the spent silica gel (or silica gel plus impinger) to the nearest 0.5 g using a balance. (This step may be conducted in the field.)

12.0 Data Analysis and Calculations

Carry out calculations, retaining at least one extra decimal significant figure beyond that of the acquired data. Round off figures only after the final calculation. Other forms of the equations may be used as long as they give equivalent results.

12.1 Nomenclature.

K_1 = 0.3858 °K/mm Hg for metric units.
= 17.64 °R/in. Hg for English units.
K_3 = 10^{-6} g/µg for metric units.
= 2.2046×10^{-9} lb/µg for English units.
m_{Be} = Total weight of beryllium in the source sample.
P_s = Absolute stack gas pressure, mm Hg (in. Hg).
t = Daily operating time, sec/day.
T_s = Absolute average stack gas temperature, °K (°R).
$V_{m(std)}$ = Dry gas sample volume at standard conditions, scm (scf).
$V_{w(std)}$ = Volume of water vapor at standard conditions, scm (scf).

12.2 Average Dry Gas Meter Temperature and Average Orifice

Pressure Drop, Dry Gas Volume, Volume of Water Vapor Condensed, Moisture Content, Isokinetic Variation, and Stack Gas Velocity and Volumetric Flow Rate. Same as Method 5, Sections 12.2 through 12.5, 12.11, and 12.12, respectively.

12.3 Total Beryllium. For each source sample, correct the average maximum absorbance of the two consecutive samples whose peak heights agree within 3 percent of their average for the contribution of the solution blank (see Sections 11.3.4 and 11.5.2). Correcting for any dilutions if necessary, use the calibration curve and these corrected averages to determine the total weight of Be in each source sample.

12.4 Beryllium Emission Rate. Calculate the daily Hg emission rate, R, using Equation 104–1. For continuous operations, the operating time is equal to 86,400 seconds per day. For cyclic operations, use only the time per day each stack is in operation. The total Hg emission rate from a source will be the summation of results from all stacks.

$$R = \frac{K_1 K_3 t m_{Be} P_s v_s A_s}{T_s\left(V_{m(std)} + V_{w(std)}\right)} \qquad \text{Eq. 104-1}$$

12.5 Determination of Compliance. Each performance test consists of three sample runs. For the purpose of determining compliance with an applicable national emission standard, use the average of the results of all sample runs.

13.0 Method Performance. [Reserved]

14.0 Pollution Prevention. [Reserved]

15.0 Waste Management. [Reserved]

16.0 References

Same as References 1, 2, and 4–11 of Section 16.0 of Method 101 with the addition of the following:

1. Amos, M.D., and J.B. Willis. Use of High-Temperature Pre-Mixed Flames in Atomic Absorption Spectroscopy. Spectrochim. Acta. 22:1325. 1966.

2. Fleet, B., K.V. Liberty, and T. S. West. A Study of Some Matrix Effects in the Determination of Beryllium by Atomic Absorption Spectroscopy in the Nitrous Oxide-Acetylene Flame. Talanta 17:203. 1970.

17.0 Tables, Diagrams, Flowcharts, And Validation Data [Reserved]

Method 105—Determination of Mercury in Wastewater Treatment Plant Sewage Sludges

Note: This method does not include all of the specifications (*e.g.,* equipment and supplies) and procedures (*e.g.,* sampling and analytical) essential to its performance. Some material is incorporated by reference from other methods in this part. Therefore, to obtain reliable results, persons using this method should also have a thorough knowledge of at least the following additional test methods: Method 101 and Method 101A.

1.0 Scope and Application

1.1 Analytes.

Analyte	CAS No.	Sensitivity
Mercury (Hg)	7439–97–6	Dependent upon spectrophotometer and recorder.

1.2 Applicability. This method is applicable for the determination of total organic and inorganic Hg content in sewage sludges.

1.3 Data Quality Objectives. Adherence to the requirements of this method will enhance the quality of the data obtained from air pollutant sampling methods.

2.0 Summary of Method

2.1 Time-composite sludge samples are withdrawn from the conveyor belt subsequent to dewatering and before incineration or drying. A weighed portion of the sludge is digested in aqua regia and is oxidized by potassium permanganate ($KMnO_4$). Mercury in the digested sample is then measured by the conventional spectrophotometric cold-vapor technique.

3.0 Definitions [Reserved]

4.0 Interferences [Reserved]

5.0 Safety

5.1 Disclaimer. This method may involve hazardous materials, operations, and equipment. This test method may not address all of the safety problems associated with its use. It is the responsibility of the user of this test method to establish appropriate safety and health practices and determine the applicability of regulatory limitations prior to performing this test method.

5.2 Corrosive Reagents. The following reagents are hazardous. Personal protective equipment and safe procedures are useful in preventing chemical splashes. If contact occurs, immediately flush with copious amounts of water at least 15 minutes. Remove clothing under shower and decontaminate. Treat residual chemical burn as thermal burn.

5.2.1 Hydrochloric Acid (HCl). Highly toxic. Vapors are highly irritating to eyes, skin, nose, and lungs, causing severe damage. May cause bronchitis, pneumonia, or edema of lungs. Exposure to concentrations of 0.13 to 0.2 percent can be lethal to humans in a few minutes. Provide ventilation to limit exposure. Reacts with metals, producing hydrogen gas.

5.2.2 Nitric Acid (HNO_3). Highly corrosive to eyes, skin, nose, and lungs. Vapors cause bronchitis, pneumonia, or edema of lungs. Reaction to inhalation may be delayed as long as 30 hours and still be fatal. Provide ventilation to limit exposure. Strong oxidizer. Hazardous reaction may occur with organic materials such as solvents.

6.0 Equipment and Supplies

6.1 Sample Collection and Mixing. The following items are required for collection and mixing of the sludge samples:

6.1.1 Container. Plastic, 50-liter.

6.1.2 Scoop. To remove 950-ml (1 quart.) sludge sample.

6.1.3 Mixer. Mortar mixer, wheelbarrow-type, 57-liter (or equivalent) with electricity-driven motor.

6.1.4 Blender. Waring-type, 2-liter.

6.1.5 Scoop. To remove 100-ml and 20-ml samples of blended sludge.

6.1.6 Erlenmeyer Flasks. Four, 125-ml.

6.1.7 Beakers. Glass beakers in the following sizes: 50 ml (1), 200 ml (1), 400 ml (2).

6.2 Sample Preparation and Analysis. Same as Method 101, Section 6.3, with the addition of the following:

6.2.1 Hot Plate.

6.2.2 Desiccator.

6.2.3 Filter Paper. S and S No. 588 (or equivalent).

6.2.4 Beakers. Glass beakers, 200 ml and 400 ml (2 each).

7.0 Reagents and Standards

Note: Unless otherwise indicated, it is intended that all reagents conform to the specifications established by the Committee on Analytical Reagents of the American Chemical Society, where such specifications are available; otherwise, use the best available grade.

7.1 Sample Analysis. Same as Method 101A, Section 7.2, with the following additions and exceptions:

7.1.1 Hydrochloric Acid. The concentrated HCl specified in Method 101A, Section 7.2.4, is not required.

7.1.2 Aqua Regia. Prepare immediately before use. Carefully add one volume of concentrated HNO_3 to three volumes of concentrated HCl.

8.0 Sample Collection, Preservation, Storage, and Transport

8.1 Sludge Sampling. Withdraw equal volume increments of sludge [for a total of at least 15 liters (16 quarts)] at intervals of 30 min over an 8-hr period, and combine in a rigid plastic container.

8.2 Sludge Mixing. Transfer the entire 15-liter sample to a mortar mixer. Mix the sample for a minimum of 30 min at 30 rpm. Take six 100-ml portions of sludge, and combine in a 2-liter blender. Blend sludge for 5 min; add water as necessary to give a fluid consistency. Immediately after stopping the blender, withdraw four 20-ml portions of blended sludge, and place them in separate, tared 125-ml Erlenmeyer flasks. Reweigh each flask to determine the exact amount of sludge added.

8.3 Sample Holding Time. Samples shall be analyzed within the time specified in the applicable subpart of the regulations.

9.0 Quality Control

Section	Quality control measure	Effect
10.0	Spectrophotometer calibration	Ensure linearity of spectrophotometer response to standards.
11.0	Check for matrix effects	Eliminate matrix effects.

10.0 Calibration and Standardization

Same as Method 101A, Section 10.2.

11.0 Analytical Procedures

11.1 Solids Content of Blended Sludge. Dry one of the 20-ml blended samples from Section 8.2 in an oven at 105 °C (221 °F) to constant weight. Cool in a desiccator, weigh and record the dry weight of the sample.

11.2 Aqua Regia Digestion of Blended Samples.

11.2.1 To each of the three remaining 20-ml samples from Section 8.2 add 25 ml of aqua regia, and digest the on a hot plate at low heat (do not boil) for 30 min, or until samples are a pale yellow-brown color and are void of the dark brown color characteristic of organic matter. Remove from hotplate and allow to cool.

11.2.2 Filter each digested sample separately through an S and S No. 588 filter or equivalent, and rinse the filter contents with 50 ml of water. Transfer the filtrate and filter washing to a 100-ml volumetric flask, and carefully dilute to volume with water.

11.3 Solids Content of the Sludge Before Blending. Remove two 100-ml portions of mixed sludge from the mortar mixer and place in separate, tared 400-ml beakers. Reweigh each beaker to determine the exact amount of sludge added. Dry in oven at 105 °C (221 °F) and cool in a desiccator to constant weight.

11.4 Analysis for Mercury. Analyze the three aqua regia-digested samples using the procedures outlined in Method 101A, Section 11.0.

12.0 Data Analysis and Calculations

12.1 Nomenclature.

C_m = Concentration of Hg in the digested sample, µg/g.

F_{sb} = Weight fraction of solids in the blended sludge.

F_{sm} = Weight fraction of solids in the collected sludge after mixing.

M = Hg content of the sewage sludge (on a dry basis), µg/g.

m = Mass of Hg in the aliquot of digested sample analyzed, µg.

n = number of digested samples (specified in Section 11.2 as three).

V_a = Volume of digested sample analyzed, ml.

V_s = Volume of digested sample, ml.

W_b = Weight of empty sample beaker, g.

W_{bs} = Weight of sample beaker and sample, g.

W_{bd} = Weight of sample beaker and sample after drying, g.

W_f = Weight of empty sample flask, g.

W_{fd} = Weight of sample flask and sample after drying, g.

W_{fs} = Weight of sample flask and sample, g.

12.2 Mercury Content of Digested Sample (Wet Basis).

12.2.1 For each sample analyzed for Hg content, calculate the arithmetic mean maximum absorbance of the two consecutive samples whose peak heights agree ±3 percent of their average. Correct this average value for the contribution of the blank. Use the calibration curve and these corrected averages to determine the final Hg concentration in the solution cell for each sludge sample.

12.2.2 Calculate the average Hg concentration of the digested samples by correcting for any dilutions made to bring the sample into the working range of the spectrophotometer and for the weight of the sludge portion digested, using Equation 105–1.

$$\overline{C}_m = \sum_{i=1}^{n}\left[\frac{mV_s}{V_a\left(W_{fs} - W_f\right)}\right]_i \qquad \text{Eq. 105-1}$$

12.3 Solids Content of Blended Sludge. Determine the solids content of the blended sludge using Equation 105–2.

$$F_{sb} = 1 - \frac{W_{fs} - W_{fd}}{W_{fs} - W_f} \qquad \text{Eq. 105-2}$$

12.4 Solids Content of Bulk Sample (before blending but, after mixing in mortar mixer). Determine the solids content of each 100 ml aliquot (Section 11.3), and average the results.

$$F_{sm} = 1 - \frac{W_{bs} - W_{bd}}{W_{bs} - W_b} \qquad \text{Eq. 105-3}$$

12.5 Mercury Content of Bulk Sample (Dry Basis). Average the results from the three samples from each 8-hr composite sample, and calculate the Hg concentration of the composite sample on a dry basis.

$$M = \frac{\overline{C}_m}{F_{sb}} \qquad \text{Eq. 105-4}$$

13.0 Method Performance

13.1 Range. The range of this method is 0.2 to 5 micrograms per gram; it may be extended by increasing or decreasing sample size.

14.0 Pollution Prevention. [Reserved]

15.0 Waste Management. [Reserved]

16.0 References

1. Bishop, J.N. Mercury in Sediments. Ontario Water Resources Commission. Toronto, Ontario, Canada. 1971.
2. Salma, M. Private Communication. EPA California/Nevada Basin Office. Alameda, California.
3. Hatch, W.R. and W.L. Ott. Determination of Sub-Microgram Quantities of Mercury by Atomic Absorption Spectrophotometry. Analytical Chemistry. 40:2085. 1968.
4. Bradenberger, H., and H. Bader. The Determination of Nanogram Levels of Mercury in Solution by a Flameless Atomic Absorption Technique. Atomic Absorption Newsletter. 6:101. 1967.
5. Analytical Quality Control Laboratory (AQCL). Mercury in Sediment (Cold Vapor Technique) (Provisional Method). U.S. Environmental Protection Agency. Cincinnati, Ohio. April 1972.
6. Kopp, J.F., M.C. Longbottom, and L.B. Lobring. ''Cold Vapor'' Method for Determining Mercury. Journal AWWA. 64(1):20–25. 1972.
7. Manual of Methods for Chemical Analysis of Water and Wastes. U.S. Environmental Protection Agency. Cincinnati, Ohio. Publication No. EPA–624/2–74–003. December 1974. pp. 118–138.
8. Mitchell, W.J., M.R. Midgett, J. Suggs, R.J. Velton, and D. Albrink. Sampling and Homogenizing Sewage for Analysis. Environmental Monitoring and Support Laboratory, Office of Research and Development, U.S. Environmental Protection Agency. Research Triangle Park, N.C. March 1979. p. 7.

17.0 Tables, Diagrams, Flowcharts, and Validation Data. [Reserved]

Method 106—Determination of Vinyl Chloride Emissions From Stationary Sources

1.0 Scope and Application

1.1 Analytes.

Analyte	CAS No.	Sensitivity
Vinyl Chloride (CH_2:CHCl)	75–01–4	Dependent upon analytical equipment.

1.2 Applicability. This method is applicable for the determination of vinyl chloride emissions from ethylene dichloride, vinyl chloride, and polyvinyl chloride manufacturing processes. This method does not measure vinyl chloride contained in particulate matter.

1.3 Data Quality Objectives. Adherence to the requirements of this method will enhance the quality of the data obtained from air pollutant sampling methods.

2.0 Summary of Method

2.1 An integrated bag sample of stack gas containing vinyl chloride is subjected to GC analysis using a flame ionization detector (FID).

3.0 Definitions. [Reserved]

4.0 Interferences

4.1 Resolution interferences of vinyl chloride may be encountered on some sources. Therefore, the chromatograph operator should select the column and operating parameters best suited to the particular analysis requirements. The selection made is subject to approval of the Administrator. Approval is automatic, provided that confirming data are produced through an adequate supplemental analytical technique, and that the data are available for review by the Administrator. An example of this would be analysis with a different column or GC/mass spectroscopy.

5.0 Safety

5.1 Disclaimer. This method may involve hazardous materials, operations, and equipment. This test method may not address all of the safety problems associated with its use. It is the responsibility of the user of this test method to establish appropriate safety and health practices and determine the applicability of regulatory limitations prior to performing this test method.

5.2 Toxic Analyte. Care must be exercised to prevent exposure of sampling personnel to vinyl chloride, which is a carcinogen.

6.0 Equipment and Supplies

6.1 Sample Collection (see Figure 106–1). The sampling train consists of the following components:

6.1.1 Probe. Stainless steel, borosilicate glass, Teflon tubing (as stack temperature permits), or equivalent, equipped with a glass wool plug to remove particulate matter.

6.1.2 Sample Lines. Teflon, 6.4-mm outside diameter, of sufficient length to connect probe to bag. Use a new unused piece for each series of bag samples that constitutes an emission test, and discard upon completion of the test.

6.1.3 Quick Connects. Stainless steel, male (2) and female (2), with ball checks (one pair without), located as shown in Figure 106–1.

6.1.4 Tedlar Bags. 50- to 100-liter capacity, to contain sample. Aluminized Mylar bags may be used if the samples are analyzed within 24 hours of collection.

6.1.5 Bag Containers. Rigid leak-proof containers for sample bags, with covering to protect contents from sunlight.

6.1.6 Needle Valve. To adjust sample flow rates.

6.1.7 Pump. Leak-free, with minimum of 2-liter/min capacity.

6.1.8 Charcoal Tube. To prevent admission of vinyl chloride and other organics to the atmosphere in the vicinity of samplers.

6.1.9 Flowmeter. For observing sampling flow rate; capable of measuring a flow range from 0.10 to 1.00 liter/min.

6.1.10 Connecting Tubing. Teflon, 6.4-mm outside diameter, to assemble sampling train (Figure 106–1).

6.1.11 Tubing Fittings and Connectors. Teflon or stainless steel, to assemble sampling training.

6.2 Sample Recovery. Teflon tubing, 6.4-mm outside diameter, to connect bag to GC sample loop. Use a new unused piece for each series of bag samples that constitutes an emission test, and discard upon conclusion of analysis of those bags.

6.3 Analysis. The following equipment is required:

6.3.1 Gas Chromatograph. With FID potentiometric strip chart recorder and 1.0 to 5.0-ml heated sampling loop in automatic sample valve. The chromatographic system shall be capable of producing a response to 0.1-ppmv vinyl chloride that is at least as great as the average noise level. (Response is measured from the average value of the base line to the maximum of the wave form, while standard operating conditions are in use.)

6.3.2 Chromatographic Columns. Columns as listed below. Other columns may be used provided that the precision and accuracy of the analysis of vinyl chloride standards are not impaired and that information is available for review confirming that there is adequate resolution of vinyl chloride peak. (Adequate resolution is defined as an area overlap of not more than 10 percent of the vinyl chloride peak by an interferent peak. Calculation of area overlap is explained in Procedure 1 of appendix C to this part: ''Determination of Adequate Chromatographic Peak Resolution.'')

6.3.2.1 Column A. Stainless steel, 2.0 m by 3.2 mm, containing 80/100-mesh Chromasorb 102.

6.3.2.2 Column B. Stainless steel, 2.0 m by 3.2 mm, containing 20 percent GE SF–96 on 60/ip-mesh Chromasorb P AW; or stainless steel, 1.0 m by 3.2 mm containing 80/100-mesh Porapak T. Column B is required as a secondary column if acetaldehyde is present. If used, column B is placed after column A. The combined columns should be operated at 120 °C (250 °F).

6.3.3 Rate Meters (2). Rotameter , or equivalent, 100-ml/min capacity, with flow control valves.

6.3.4 Gas Regulators. For required gas cylinders.

6.3.5 Temperature Sensor. Accurate to ±1 °C (±2 °F), to measure temperature of heated sample loop at time of sample injection.

6.3.6 Barometer. Accurate to ±5 mm Hg, to measure atmospheric pressure around GC during sample analysis.

6.3.7 Pump. Leak-free, with minimum of 100-ml/min capacity.

6.3.8 Recorder. Strip chart type, optionally equipped with either disc or electronic integrator.

6.3.9 Planimeter. Optional, in place of disc or electronic integrator on recorder, to measure chromatograph peak areas.

6.4 Calibration and Standardization.

6.4.1 Tubing. Teflon, 6.4-mm outside diameter, separate pieces marked for each calibration concentration.

Note: The following items are required only if the optional standard gas preparation procedures (Section 10.1) are followed.

6.4.2 Tedlar Bags. Sixteen-inch-square size, with valve; separate bag marked for each calibration concentration.

6.4.3 Syringes. 0.5-ml and 50-µl, gas tight, individually calibrated to dispense gaseous vinyl chloride.

6.4.4 Dry Gas Meter with Temperature and Pressure Gauges. Singer Model DTM–115 with 802 index, or equivalent, to meter nitrogen in preparation of standard gas mixtures, calibrated at the flow rate used to prepare standards.

7.0 Reagents and Standards

7.1 Analysis. The following reagents are required for analysis.

7.1.1 Helium or Nitrogen. Purity 99.9995 percent or greater, for chromatographic carrier gas.

7.1.2 Hydrogen. Purity 99.9995 percent or greater.

7.1.3 Oxygen or Air. Either oxygen (purity 99.99 percent or greater) or air (less than 0.1 ppmv total hydrocarbon content), as required by detector.

7.2 Calibration. Use one of the following options: either Sections 7.2.1 and 7.2.2, or Section 7.2.3.

7.2.1 Vinyl Chloride. Pure vinyl chloride gas certified by the manufacturer to contain a minimum of 99.9 percent vinyl chloride. If the gas manufacturer maintains a bulk cylinder supply of 99.9+ percent vinyl chloride, the certification analysis may have been performed on this supply, rather than on each gas cylinder prepared from this bulk supply. The date of gas cylinder preparation and the certified analysis must have been affixed to the cylinder before shipment from the gas manufacturer to the buyer.

7.2.2 Nitrogen. Same as described in Section 7.1.1.

7.2.3 Cylinder Standards. Gas mixture standards (50-,10-, and 5 ppmv vinyl chloride) in nitrogen cylinders may be used to directly prepare a chromatograph calibration curve as described in Section 10.3 if the following conditions are met: (a) The manufacturer certifies the gas composition with an accuracy of ±3 percent or better. (b) The manufacturer recommends a maximum shelf life over which the gas concentration does not change by greater than ±5 percent from the certified value. (c) The manufacturer affixes the date of gas cylinder preparation, certified vinyl chloride concentration, and recommended maximum shelf to the cylinder before shipment to the buyer.

7.2.3.1 Cylinder Standards Certification. The manufacturer shall certify the concentration of vinyl chloride in nitrogen in each cylinder by (a) directly analyzing each cylinder and (b) calibrating his analytical procedure on the day of cylinder analysis. To calibrate his analytical procedure, the manufacturer shall use as a minimum, a three point calibration curve. It is recommended that the manufacturer maintain (1) a high concentration calibration standard (between 50 and 100 ppmv) to prepare his calibration curve by an appropriate dilution technique and (2) a low-concentration calibration standard (between 5 and 10 ppmv) to verify the dilution technique used. If the difference between the apparent concentration read from the calibration curve and the true concentration assigned to the low-concentration calibration standard exceeds 5 percent of the true concentration, the manufacturer shall

determine the source of error and correct it, then repeat the three-point calibration.

7.2.3.2 Verification of Manufacturer's Calibration Standards. Before using a standard, the manufacturer shall verify each calibration standard (a) by comparing it to gas mixtures prepared (with 99 mole percent vinyl chloride) in accordance with the procedure described in Section 7.2.1 or (b) calibrating it against vinyl chloride cylinder Standard Reference Materials (SRM's) prepared by the National Institute of Standards and Technology, if such SRM's are available. The agreement between the initially determined concentration value and the verification concentration value must be ±5 percent. The manufacturer must reverify all calibration standards on a time interval consistent with the shelf life of the cylinder standards sold.

7.2.4 Audit Cylinder Standards.

7.2.4.1 Gas mixture standards with concentrations known only to the person supervising the analysis of samples. The concentrations of the audit cylinders should be: one low-concentration cylinder in the range of 5 to 20 ppmv vinyl chloride and one high-concentration cylinder in the range of 20 to 50 ppmv. When available, obtain audit samples from the appropriate EPA Regional Office or from the responsible enforcement authority.

Note: The responsible enforcement agency should be notified at least 30 days prior to the test date to allow sufficient time for sample delivery.

7.2.4.2 Alternatively, audit cylinders obtained from a commercial gas manufacturer may be used provided: (a) the gas meets the conditions described in Section 7.2.3, (b) the gas manufacturer certifies the audit cylinder as described in Section 7.2.3.1, and (c) the gas manufacturer obtains an independent analysis of the audit cylinders to verify this analysis. Independent analysis is defined here to mean analysis performed by an individual different than the individual who performs the gas manufacturer's analysis, while using calibration standards and analysis equipment different from those used for the gas manufacturer's analysis. Verification is complete and acceptable when the independent analysis concentration is within 5 percent of the gas manufacturer's concentration.

8.0 Sample Collection, Preservation, Storage, and Transport

Note: Performance of this method should not be attempted by persons unfamiliar with the operation of a gas chromatograph (GC) nor by those who are unfamiliar with source sampling, because knowledge beyond the scope of this presentation is required.

8.1 Bag Leak-Check. The following leak-check procedure is recommended, but not required, prior to sample collection. The post-test leak-check procedure is mandatory. Connect a water manometer and pressurize the bag to 5 to 10 cm H_2O (2 to 4 in. H_2O). Allow to stand for 10 min. Any displacement in the water manometer indicates a leak. Also, check the rigid container for leaks in this manner.

Note: An alternative leak-check method is to pressurize the bag to 5 to 10 cm H2O and allow it to stand overnight. A deflated bag indicates a leak. For each sample bag in its rigid container, place a rotameter in line between the bag and the pump inlet. Evacuate the bag. Failure of the rotameter to register zero flow when the bag appears to be empty indicates a leak.

8.2 Sample Collection. Assemble the sample train as shown in Figure 106–1. Join the quick connects as illustrated, and determine that all connection between the bag and the probe are tight. Place the end of the probe at the centroid of the stack and start the pump with the needle valve adjusted to yield a flow that will fill over 50 percent of bag volume in the specific sample period. After allowing sufficient time to purge the line several times, change the vacuum line from the container to the bag and evacuate the bag until the rotameter indicates no flow. Then reposition the sample and vacuum lines and begin the actual sampling, keeping the rate proportional to the stack velocity. At all times, direct the gas exiting the rotameter away from sampling personnel. At the end of the sample period, shut off the pump, disconnect the sample line from the bag, and disconnect the vacuum line from the bag container. Protect the bag container from sunlight.

8.3 Sample Storage. Keep the sample bags out of direct sunlight. When at all possible, analysis is to be performed within 24 hours, but in no case in excess of 72 hours of sample collection. Aluminized Mylar bag samples must be analyzed within 24 hours.

8.4 Post-test Bag Leak-Check. Subsequent to recovery and analysis of the sample, leak-check the sample bag according to the procedure outlined in Section 8.1.

9.0 Quality Control

9.1 Miscellaneous Quality Control

Section	Quality control measure	Effect
10.3	Chromatograph calibration	Ensure precision and accuracy of chromatograph.
11.1	Audit sample analysis	Evaluate analytical technique and standards preparation.

9.2 Immediately after the preparation of the calibration curve and prior to the sample analyses, perform the analysis audit described in Appendix C, Procedure 2: ''Procedure for Field Auditing GC Analysis.''

10.0 Calibration and Standardization

Note: Maintain a laboratory log of all calibrations.

10.1 Preparation of Vinyl Chloride Standard Gas Mixtures. (Optional Procedure-delete if cylinder standards are used.) Evacuate a 16-inch square Tedlar bag that has passed a leak-check (described in Section 8.1) and meter in 5.0 liters of nitrogen. While the bag is filling, use the 0.5-ml syringe to inject 250 µl of 99.9+ percent vinyl chloride gas through the wall of the bag. Upon withdrawing the syringe, immediately cover the resulting hole with a piece of adhesive tape. The bag now contains a vinyl chloride concentration of 50 ppmv. In a like manner use the 50 µl syringe to prepare gas mixtures having 10-and 5-ppmv vinyl chloride concentrations. Place each bag on a smooth surface and alternately depress opposite sides of the bag 50 times to further mix the gases. These gas mixture standards may be used for 10 days from the date of preparation, after which time new gas mixtures must be prepared. (Caution: Contamination may be a problem when a bag is reused if the new gas mixture standard is a lower concentration than the previous gas mixture standard.)

10.2 Determination of Vinyl Chloride Retention Time. (This section can be performed simultaneously with Section 10.3.) Establish chromatograph conditions identical with those in Section 11.3. Determine proper attenuator position. Flush the sampling loop with helium or nitrogen and activate the sample valve. Record the injection time, sample loop temperature, column temperature, carrier gas flow

rate, chart speed, and attenuator setting. Record peaks and detector responses that occur in the absence of vinyl chloride. Maintain conditions with the equipment plumbing arranged identically to Section 11.2, and flush the sample loop for 30 seconds at the rate of 100 ml/min with one of the vinyl chloride calibration mixtures. Then activate the sample valve. Record the injection time. Select the peak that corresponds to vinyl chloride. Measure the distance on the chart from the injection time to the time at which the peak maximum occurs. This quantity divided by the chart speed is defined as the retention time. Since other organics may be present in the sample, positive identification of the vinyl chloride peak must be made.

10.3 Preparation of Chromatograph Calibration Curve. Make a GC measurement of each gas mixture standard (described in Section 7.2.3 or 10.1) using conditions identical to those listed in Sections 11.2 and 11.3. Flush the sampling loop for 30 seconds at the rate of 100 ml/min with one of the standard mixtures, and activate the sample valve. Record the concentration of vinyl chloride injected (C_c), attenuator setting, chart speed, peak area, sample loop temperature, column temperature, carrier gas flow rate, and retention time. Record the barometric pressure. Calculate A_c, the peak area multiplied by the attenuator setting. Repeat until two consecutive injection areas are within 5 percent, then plot the average of those two values versus C_c. When the other standard gas mixtures have been similarly analyzed and plotted, draw a straight line through the points derived by the least squares method. Perform calibration daily, or before and after the analysis of each emission test set of bag samples, whichever is more frequent. For each group of sample analyses, use the average of the two calibration curves which bracket that group to determine the respective sample concentrations. If the two calibration curves differ by more than 5 percent from their mean value, then report the final results by both calibration curves.

11.0 Analytical Procedure

11.1 Audit Sample Analysis. Immediately after the preparation of the calibration curve and prior to the sample analyses, perform the analysis audit described in Procedure 2 of appendix C to this part: ''Procedure for Field Auditing GC Analysis.''

11.2 Sample Recovery. With a new piece of Teflon tubing identified for that bag, connect a bag inlet valve to the gas chromatograph sample valve. Switch the valve to receive gas from the bag through the sample loop. Arrange the equipment so the sample gas passes from the sample valve to 100-ml/min rotameter with flow control valve followed by a charcoal tube and a 1-in. H_2O pressure gauge. Maintain the sample flow either by a vacuum pump or container pressurization if the collection bag remains in the rigid container. After sample loop purging is ceased, allow the pressure gauge to return to zero before activating the gas sampling valve.

11.3 Analysis.

11.3.1 Set the column temperature to 100 °C (210 °F) and the detector temperature to 150 °C (300 °F). When optimum hydrogen and oxygen (or air) flow rates have been determined, verify and maintain these flow rates during all chromatography operations. Using helium or nitrogen as the carrier gas, establish a flow rate in the range consistent with the manufacturer's requirements for satisfactory detector operation. A flow rate of approximately 40 ml/min should produce adequate separations. Observe the base line periodically and determine that the noise level has stabilized and that base line drift has ceased. Purge the sample loop for 30 seconds at the rate of 100 ml/min, shut off flow, allow the sample loop pressure to reach atmospheric pressure as indicated by the H_2O manometer, then activate the sample valve. Record the injection time (the position of the pen on the chart at the time of sample injection), sample number, sample loop temperature, column temperature, carrier gas flow rate, chart speed, and attenuator setting. Record the barometric pressure. From the chart, note the peak having the retention time corresponding to vinyl chloride as determined in Section 10.2. Measure the vinyl chloride peak area, A_m, by use of a disc integrator, electronic integrator, or a planimeter. Measure and record the peak heights, H_m. Record A_m and retention time. Repeat the injection at least two times or until two consecutive values for the total area of the vinyl chloride peak agree within 5 percent of their average. Use the average value for these two total areas to compute the bag concentration.

11.3.2 Compare the ratio of H_m to A_m for the vinyl chloride sample with the same ratio for the standard peak that is closest in height. If these ratios differ by more than 10 percent, the vinyl chloride peak may not be pure (possibly acetaldehyde is present) and the secondary column should be employed (see Section 6.3.2.2).

11.4 Determination of Bag Water Vapor Content. Measure the ambient temperature and barometric pressure near the bag. From a water saturation vapor pressure table, determine and record the water vapor content of the bag, B_{wb}, as a decimal figure. (Assume the relative humidity to be 100 percent unless a lesser value is known.)

12.0 Calculations and Data Analysis

12.1 Nomenclature.

A_m = Measured peak area.

A_f = Attenuation factor.

B_{wb} = Water vapor content of the bag sample, as analyzed, volume fraction.

C_b = Concentration of vinyl chloride in the bag, ppmv.

C_c = Concentration of vinyl chloride in the standard sample, ppmv.

P_i = Laboratory pressure at time of analysis, mm Hg.

P_r = Reference pressure, the laboratory pressure recorded during calibration, mm Hg.

T_i = Absolute sample loop temperature at the time of analysis, °K (°R).

T_r = Reference temperature, the sample loop temperature recorded during calibration, °K (°R).

12.2 Sample Peak Area. Determine the sample peak area, A_c, as follows:

$$A_c = A_m A_f \qquad \text{Eq. 106-1}$$

12.3 Vinyl Chloride Concentration. From the calibration curves prepared in Section 10.3, determine the average concentration value of vinyl chloride, C_c, that corresponds to A_c, the sample peak area. Calculate the concentration of vinyl chloride in the bag, C_b, as follows:

$$C_b = \frac{C_c P_r T_i}{P_i T_r (1 - B_{wb})} \qquad \text{Eq. 106-2}$$

13.0 Method Performance

13.1 Analytical Range. This method is designed for the 0.1 to 50 parts per million by volume (ppmv) range. However, common gas chromatograph (GC) instruments are capable of detecting 0.02 ppmv vinyl chloride. With proper calibration, the upper limit may be extended as needed.

14.0 Pollution Prevention, [Reserved]

15.0 Waste Management, [Reserved]

16.0 References

1. Brown D.W., E.W. Loy, and M.H. Stephenson. Vinyl Chloride Monitoring Near the B. F. Goodrich Chemical Company in Louisville, KY. Region IV, U.S. Environmental Protection Agency, Surveillance and Analysis Division, Athens, GA. June 24, 1974.

2. G.D. Clayton and Associates. Evaluation of a Collection and Analytical Procedure for Vinyl Chloride in Air. U.S. Environmental Protection Agency, Research Triangle Park, N.C. EPA Contract No. 68–02–1408, Task Order No. 2, EPA Report No. 75–VCL–1. December 13, 1974.

3. Midwest Research Institute. Standardization of Stationary Source Emission Method for Vinyl Chloride. U.S. Environmental Protection Agency, Research Triangle Park, N.C. Publication No. EPA–600/4–77–026. May 1977.

4. Scheil, G. and M.C. Sharp. Collaborative Testing of EPA Method 106 (Vinyl Chloride) that Will Provide for a Standardized Stationary Source Emission Measurement Method. U.S. Environmental Protection Agency, Research Triangle Park, N.C. Publication No. EPA 600/4–78–058. October 1978.

17.0 Tables, Diagrams Flowcharts, and Validation Data.

BILLING CODE 6560–50–P

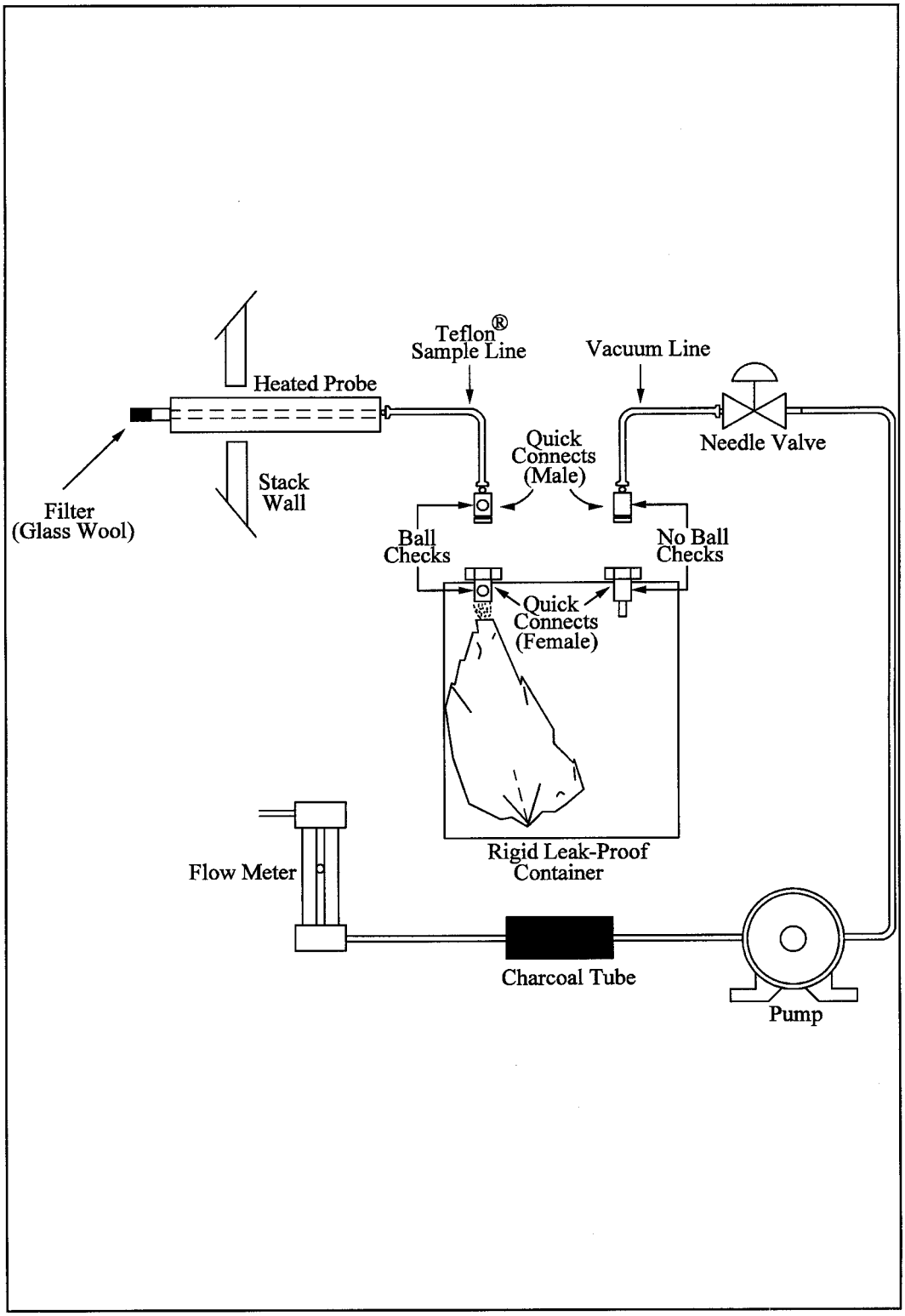

Figure 106-1. Integrated-bag sampling train.

BILLING CODE 6560–50–C

Method 107—Determination of Vinyl Chloride Content of In-Process Wastewater Samples, and Vinyl Chloride Content of Polyvinyl Chloride Resin Slurry, Wet Cake, and Latex Samples

Note: Performance of this method should not be attempted by persons unfamiliar with the operation of a gas chromatograph (GC) nor by those who are unfamiliar with source sampling, because knowledge beyond the scope of this presentation is required. This method does not include all of the specifications (*e.g.,* equipment and supplies) and procedures (*e.g.,* sampling and analytical) essential to its performance. Some material is incorporated by reference from other methods in this part. Therefore, to obtain reliable results, persons using this method should have a thorough knowledge of at least the following additional test methods: Method 106.

1.0 Scope and Application

1.1 Analytes.

Analyte	CAS No.	Sensitivity
Vinyl Chloride (CH_2:CHCl)	75–01–4	Dependent upon analytical equipment.

1.2 Applicability. This method is applicable for the determination of the vinyl chloride monomer (VCM) content of in-process wastewater samples, and the residual vinyl chloride monomer (RCVM) content of polyvinyl chloride (PVC) resins, wet, cake, slurry, and latex samples. It cannot be used for polymer in fused forms, such as sheet or cubes. This method is not acceptable where methods from section 304(h) of the Clean Water Act, 33 U.S.C. 1251 *et seq.* (the Federal Water Pollution Control Amendments of 1972 as amended by the Clean Water Act of 1977) are required.

1.3 Data Quality Objectives. Adherence to the requirements of this method will enhance the quality of the data obtained from air pollutant sampling methods.

2.0 Summary of Method

2.1 The basis for this method relates to the vapor equilibrium that is established at a constant known temperature in a closed system between RVCM, PVC resin, water, and air. The RVCM in a PVC resin will equilibrate rapidly in a closed vessel, provided that the temperature of the PVC resin is maintained above the glass transition temperature of that specific resin.

2.2 A sample of PVC or in-process wastewater is collected in a vial or bottle and is conditioned. The headspace in the vial or bottle is then analyzed for vinyl chloride using gas chromatography with a flame ionization detector.

3.0 Definitions [Reserved]

4.0 Interferences

4.1 The chromatograph columns and the corresponding operating parameters herein described normally provide an adequate resolution of vinyl chloride; however, resolution interferences may be encountered on some sources. Therefore, the chromatograph operator shall select the column and operating parameters best suited to his particular analysis requirements, subject to the approval of the Administrator. Approval is automatic provided that confirming data are produced through an adequate supplemental analytical technique, such as analysis with a different column or GC/mass spectroscopy, and that these data are made available for review by the Administrator.

5.0 Safety

5.1 Disclaimer. This method may involve hazardous materials, operations, and equipment. This test method may not address all of the safety problems associated with its use. It is the responsibility of the user of this test method to establish appropriate safety and health practices and determine the applicability of regulatory limitations prior to performing this test method.

5.2 Toxic Analyte. Care must be exercised to prevent exposure of sampling personnel to vinyl chloride, which is a carcinogen. Do not release vinyl chloride to the laboratory atmosphere during preparation of standards. Venting or purging with VCM/air mixtures must be held to a minimum. When they are required, the vapor must be routed to outside air. Vinyl chloride, even at low ppm levels, must never be vented inside the laboratory. After vials have been analyzed, the gas must be vented prior to removal of the vial from the instrument turntable. Vials must be vented through a hypodermic needle connected to an activated charcoal tube to prevent release of vinyl chloride into the laboratory atmosphere. The charcoal must be replaced prior to vinyl chloride breakthrough.

6.0 Equipment and Supplies

6.1 Sample Collection. The following equipment is required:

6.1.1 Glass bottles. 60-ml (2-oz) capacity, with wax-lined screw-on tops, for PVC samples.

6.1.2 Glass Vials. Headspace vials, with Teflon-faced butyl rubber sealing discs, for water samples.

6.1.3 Adhesive Tape. To prevent loosening of bottle tops.

6.2 Sample Recovery. The following equipment is required:

6.2.1 Glass Vials. Headspace vials, with butyl rubber septa and aluminum caps. Silicone rubber is not acceptable.

6.2.2 Analytical Balance. Capable of determining sample weight within an accuracy of ±1 percent.

6.2.3 Vial Sealer. To seal headspace vials.

6.2.4 Syringe. 100-ml capacity.

6.3 Analysis. The following equipment is required:

6.3.1 Headspace Sampler and Chromatograph. Capable of sampling and analyzing a constant amount of headspace gas from a sealed vial, while maintaining that vial at a temperature of 90 °C ± 0.5 °C (194 °F ± 0.9 °F). The chromatograph shall be equipped with a flame ionization detector (FID). Perkin-Elmer Corporation Models F–40, F–42, F–45, HS–6, and HS–100, and Hewlett-Packard Corporation Model 19395A have been found satisfactory. Chromatograph backflush capability may be required.

6.3.2 Chromatographic Columns. Stainless steel 1 m by 3.2 mm and 2 m by 3.2 mm, both containing 50/80-mesh Porapak Q. Other columns may be used provided that the precision and accuracy of the analysis of vinyl chloride standards are not impaired and information confirming that there is adequate resolution of the vinyl chloride peak are available for review. (Adequate resolution is defined as an area overlap of not more than 10 percent of the vinyl chloride peak by an interferant peak. Calculation of area overlap is explained in Procedure 1 of appendix C to this part: ''Determination of Adequate Chromatographic Peak Resolution.'') Two 1.83 m columns, each containing 1 percent Carbowax 1500 on Carbopak B, have been found satisfactory for samples containing acetaldehyde.

6.3.3 Temperature Sensor. Range 0 to 100 °C (32 to 212 °F) accurate to 0.1°C.

6.3.4 Integrator-Recorder. To record chromatograms.

6.3.5 Barometer. Accurate to 1 mm Hg.

6.3.6 Regulators. For required gas cylinders.

6.3.7 Headspace Vial Pre-Pressurizer. Nitrogen pressurized hypodermic needle inside protective shield.

7.0 Reagents and Standards

7.1 Analysis. Same as Method 106, Section 7.1, with the addition of the following:

7.1.1 Water. Interference-free.

7.2 Calibration. The following items are required for calibration:

7.2.1 Cylinder Standards (4). Gas mixture standards (50-, 500-, 2000- and 4000-ppm vinyl chloride in nitrogen cylinders). Cylinder standards may be used directly to prepare a chromatograph calibration curve as described in Section 10.3, if the following conditions are met: (a) The manufacturer certifies the gas composition with an accuracy of ±3 percent or better (see Section 7.2.1.1). (b) The manufacturer recommends a maximum shelf life over which the gas concentration does not change by greater than ±5 percent from the certified value. (c) The manufacturer affixes the date of gas cylinder preparation, certified vinyl chloride concentration, and recommended maximum shelf life to the cylinder before shipment to the buyer.

7.2.1.1 Cylinder Standards Certification. The manufacturer shall certify the concentration of vinyl chloride in nitrogen in each cylinder by (a) directly analyzing each cylinder and (b) calibrating the analytical procedure on the day of cylinder analysis. To calibrate the analytical procedure, the manufacturer shall use, as a minimum, a 3-point calibration curve. It is recommended that the manufacturer maintain (1) a high-concentration calibration standard (between 4000 and 8000 ppm) to prepare the calibration curve by an appropriate dilution technique and (2) a low-concentration calibration standard (between 50 and 500 ppm) to verify the dilution technique used. If the difference between the apparent concentration read from the calibration curve and the true concentration assigned to the low-concentration calibration standard exceeds 5 percent of the true concentration, the manufacturer shall determine the source of error and correct it, then repeat the 3-point calibration.

7.2.1.2 Verification of Manufacturer's Calibration Standards. Before using, the manufacturer shall verify each calibration standard by (a) comparing it to gas mixtures prepared (with 99 mole percent vinyl chloride) in accordance with the procedure described in Section 10.1 of Method 106 or by (b) calibrating it against vinyl chloride cylinder Standard Reference Materials (SRMs) prepared by the National Institute of Standards and Technology, if such SRMs are available. The agreement between the initially determined concentration value and the verification concentration value must be within 5 percent. The manufacturer must reverify all calibration standards on a time interval consistent with the shelf life of the cylinder standards sold.

8.0 Sample Collection, Preservation, Storage, and Transport

8.1 Sample Collection.

8.1.1 PVC Sampling. Allow the resin or slurry to flow from a tap on the tank or silo until the tap line has been well purged. Extend and fill a 60-ml sample bottle under the tap, and immediately tighten a cap on the bottle. Wrap adhesive tape around the cap and bottle to prevent the cap from loosening. Place an identifying label on each bottle, and record the date, time, and sample location both on the bottles and in a log book.

8.1.2 Water Sampling. At the sampling location fill the vials bubble-free to overflowing so that a convex meniscus forms at the top. The excess water is displaced as the sealing disc is carefully placed, with the Teflon side down, on the opening of the vial. Place the aluminum seal over the disc and the neck of the vial, and crimp into place. Affix an identifying label on the bottle, and record the date, time, and sample location both on the vials and in a log book.

8.2 Sample Storage. All samples must be analyzed within 24 hours of collection, and must be refrigerated during this period.

9.0 Quality Control

Section	Quality control measure	Effect
10.3	Chromatograph calibration	Ensure precision and accuracy of chromatograph.

10.0 Calibration and Standardization

Note: Maintain a laboratory log of all calibrations.

10.1 Preparation of Standards. Calibration standards are prepared as follows: Place 100 µl or about two equal drops of distilled water in the sample vial, then fill the vial with the VCM/nitrogen standard, rapidly seat the septum, and seal with the aluminum cap. Use a ⅛-in. stainless steel line from the cylinder to the vial. Do not use rubber or Tygon tubing. The sample line from the cylinder must be purged (into a properly vented hood) for several minutes prior to filling the vials. After purging, reduce the flow rate to between 500 and 1000 cc/min. Place end of tubing into vial (near bottom). Position a septum on top of the vial, pressing it against the ⅛-in. filling tube to minimize the size of the vent opening. This is necessary to minimize mixing air with the standard in the vial. Each vial is to be purged with standard for 90 seconds, during which time the filling tube is gradually slid to the top of the vial. After the 90 seconds, the tube is removed with the septum, simultaneously sealing the vial. Practice will be necessary to develop good technique. Rubber gloves should be worn during the above operations. The sealed vial must then be pressurized for 60 seconds using the vial prepressurizer. Test the vial for leakage by placing a drop of water on the septum at the needle hole. Prepressurization of standards is not required unless samples have been prepressurized.

10.2 Analyzer Calibration. Calibration is to be performed each 8-hour period the chromatograph is used. Alternatively, calibration with duplicate 50-, 500-, 2,000-, and 4,000-ppm standards (hereafter described as a four-point calibration) may be performed on a monthly basis, provided that a calibration confirmation test consisting of duplicate analyses of an appropriate standard is performed once per plant shift, or once per chromatograph carrousel operation (if the chromatograph operation is less frequent than once per shift). The criterion for acceptance of each calibration confirmation test is that both analyses of 500-ppm standards [2,000-ppm standards if dispersion resin (excluding latex resin) samples are being analyzed] must be within 5 percent of the most recent four-point calibration curve. If this criterion is not met, then a complete four-point calibration must be performed before sample analyses can proceed.

10.3 Preparation of Chromatograph Calibration Curve. Prepare two vials each of 50-, 500-, 2,000-, and 4,000-ppm standards. Run the calibration samples in exactly the same manner as regular samples. Plot A_s, the integrator area counts for each standard sample, versus C_c, the concentration of vinyl chloride in each standard sample. Draw a straight line through the points derived by the least squares method.

11.0 Analytical Procedure

11.1 Preparation of Equipment. Install the chromatographic column and condition overnight at 160 °C (320 °F). In the first operation, Porapak columns must be purged for 1 hour at 230 °C (450 °F).

Do not connect the exit end of the column to the detector while conditioning. Hydrogen and air to the detector must be turned off while the column is disconnected.

11.2 Flow Rate Adjustments. Adjust flow rates as follows:

11.2.1. Nitrogen Carrier Gas. Set regulator on cylinder to read 50 psig. Set regulator on chromatograph to produce a flow rate of 30.0 cc/min. Accurately measure the flow rate at the exit end of the column using the soap film flowmeter and a stopwatch, with the oven and column at the analysis temperature. After the instrument program advances to the ''B'' (backflush) mode, adjust the nitrogen pressure regulator to exactly balance the nitrogen flow rate at the detector as was obtained in the ''A'' mode.

11.2.2. Vial Prepressurizer Nitrogen.

11.2.2.1 After the nitrogen carrier is set, solve the following equation and adjust the pressure on the vial prepressurizer accordingly.

$$P = \frac{T_1}{T_2}\left[P_1 - \frac{P_{w1} - P_{w2}}{7.50}\right] - 10\,\text{kPa} \qquad \text{Eq. 107-1}$$

Where:

T_1 = Ambient temperature, °K (°R).
T_2 = Conditioning bath temperature, °K (°R).
P_1 = Gas chromatograph absolute dosing pressure (analysis mode), k Pa.
P_{w1} = Water vapor pressure 525.8 mm Hg @ 90 °C.
P_{w2} = Water vapor pressure 19.8 mm Hg @ 22 °C.
7.50 = mm Hg per k Pa.
10 kPa = Factor to adjust the prepressurized pressure to slightly less than the dosing pressure.

11.2.2.2 Because of gauge errors, the apparatus may over-pressurize the vial. If the vial pressure is at or higher than the dosing pressure, an audible double injection will occur. If the vial pressure is too low, errors will occur on resin samples because of inadequate time for head-space gas equilibrium. This condition can be avoided by running several standard gas samples at various pressures around the calculated pressure, and then selecting the highest pressure that does not produce a double injection. All samples and standards must be pressurized for 60 seconds using the vial prepressurizer. The vial is then placed into the 90 °C conditioning bath and tested for leakage by placing a drop of water on the septum at the needle hole. A clean, burr-free needle is mandatory.

11.2.3. Burner Air Supply. Set regulator on cylinder to read 50 psig. Set regulator on chromatograph to supply air to burner at a rate between 250 and 300 cc/min. Check with bubble flowmeter.

11.2.4. Hydrogen Supply. Set regulator on cylinder to read 30 psig. Set regulator on chromatograph to supply approximately 35 ± 5 cc/min. Optimize hydrogen flow to yield the most sensitive detector response without extinguishing the flame. Check flow with bubble meter and record this flow.

11.3 Temperature Adjustments. Set temperatures as follows:

11.3.1. Oven (chromatograph column), 140 °C (280 °F).

11.3.2. Dosing Line, 150 °C (300 °F).

11.3.3. Injection Block, 170 °C (340 °F).

11.3.4. Sample Chamber, Water Temperature, 90 °C ± 1.0 °C (194 °F ± 1.8 °F).

11.4 Ignition of Flame Ionization Detector. Ignite the detector according to the manufacturer's instructions.

11.5 Amplifier Balance. Balance the amplifier according to the manufacturer's instructions.

11.6 Programming the Chromatograph. Program the chromatograph as follows:

11.6.1. I — Dosing or Injection Time. The normal setting is 2 seconds.

11.6.2. A — Analysis Time. The normal setting is approximately 70 percent of the VCM retention time. When this timer terminates, the programmer initiates backflushing of the first column.

11.6.3. B — Backflushing Time. The normal setting is double the analysis time.

11.6.4. W — Stabilization Time. The normal setting is 0.5 min to 1.0 min.

11.6.5. X — Number of Analyses Per Sample. The normal setting is one.

11.7. Sample Treatment. All samples must be recovered and analyzed within 24 hours after collection.

11.7.1 Resin Samples. The weight of the resin used must be between 0.1 and 4.5 grams. An exact weight must be obtained (within ±1 percent) for each sample. In the case of suspension resins, a volumetric cup can be prepared for holding the required amount of sample. When the cup is used, open the sample bottle, and add the cup volume of resin to the tared sample vial (tared, including septum and aluminum cap). Obtain the exact sample weight, add 100 ml or about two equal drops of water, and immediately seal the vial. Report this value on the data sheet; it is required for calculation of RVCM. In the case of dispersion resins, the cup cannot be used. Weigh the sample in an aluminum dish, transfer the sample to the tared vial, and accurately weigh it in the vial. After prepressurization of the samples, condition them for a minimum of 1 hour in the 90 °C (190 °F) bath. Do not exceed 5 hours. Prepressurization is not required if the sample weight, as analyzed, does not exceed 0.2 gram. It is also not required if solution of the prepressurization equation yields an absolute prepressurization value that is within 30 percent of the atmospheric pressure.

Note: Some aluminum vial caps have a center section that must be removed prior to placing into sample tray. If the cap is not removed, the injection needle will be damaged.

11.7.2 Suspension Resin Slurry and Wet Cake Samples. Decant the water from a wet cake sample, and turn the sample bottle upside down onto a paper towel. Wait for the water to drain, place approximately 0.2 to 4.0 grams of the wet cake sample in a tared vial (tared, including septum and aluminum cap) and seal immediately. Then determine the sample weight (1 percent). All samples weighing over 0.2 gram, must be prepressurized prior to conditioning for 1 hour at 90 °C (190 °F), except as noted in Section 11.7.1. A sample of wet cake is used to determine total solids (TS). This is required for calculating the RVCM.

11.7.3 Dispersion Resin Slurry and Geon Latex Samples. The materials

should not be filtered. Sample must be thoroughly mixed. Using a tared vial (tared, including septum and aluminum cap) add approximately eight drops (0.25 to 0.35 g) of slurry or latex using a medicine dropper. This should be done immediately after mixing. Seal the vial as soon as possible. Determine sample weight (1 percent). Condition the vial for 1 hour at 90 °C (190 °F) in the analyzer bath. Determine the TS on the slurry sample (Section 11.10).

11.7.4 In-process Wastewater Samples. Using a tared vial (tared, including septum and aluminum cap) quickly add approximately 1 cc of water using a medicine dropper. Seal the vial as soon as possible. Determine sample weight (1 percent). Condition the vial for 1 hour at 90 °C (190 °F) in the analyzer bath.

11.8 Preparation of Sample Turntable.

11.8.1 Before placing any sample into turntable, be certain that the center section of the aluminum cap has been removed. The numbered sample vials should be placed in the corresponding numbered positions in the turntable. Insert samples in the following order:

11.8.1.1 Positions 1 and 2. Old 2000-ppm standards for conditioning. These are necessary only after the analyzer has not been used for 24 hours or longer.

11.8.1.2 Position 3. 50-ppm standard, freshly prepared.

11.8.1.3 Position 4. 500-ppm standard, freshly prepared.

11.8.1.4 Position 5. 2000-ppm standard, freshly prepared.

11.8.1.5 Position 6. 4000-ppm standard, freshly prepared.

11.8.1.6 Position 7. Sample No. 7 (This is the first sample of the day, but is given as 7 to be consistent with the turntable and the integrator printout.)

11.8.2 After all samples have been positioned, insert the second set of 50-, 500-, 2000-, and 4000-ppm standards. Samples, including standards, must be conditioned in the bath of 90 °C (190 °F) for a minimum of one hour and a maximum of five hours.

11.9 Start Chromatograph Program. When all samples, including standards, have been conditioned at 90 °C (190 °F) for at least one hour, start the analysis program according to the manufacturer's instructions. These instructions must be carefully followed when starting and stopping a program to prevent damage to the dosing assembly.

11.10 Determination of Total Solids. For wet cake, slurry, resin solution, and PVC latex samples, determine TS for each sample by accurately weighing approximately 3 to 4 grams of sample in an aluminum pan before and after placing in a draft oven (105 to 110 °C (221 to 230 °F)). Samples must be dried to constant weight. After first weighing, return the pan to the oven for a short period of time, and then reweigh to verify complete dryness. The TS are then calculated as the final sample weight divided by initial sample weight.

12.0 Calculations and Data Analysis

12.1 Nomenclature.

A_s = Chromatogram area counts of vinyl chloride for the sample, area counts.

A_s = Chromatogram area counts of vinyl chloride for the sample.

C_c = Concentration of vinyl chloride in the standard sample, ppm.

K_p = Henry's Law Constant for VCM in PVC 90 °C, 6.52×10^{-6} g/g/mm Hg.

K_w = Henry's Law Constant for VCM in water 90 °C, 7×10^{-7} g/g/mm Hg.

M_v = Molecular weight of VCM, 62.5 g/mole.

m = Sample weight, g.

P_a = Ambient atmospheric pressure, mm Hg.

R = Gas constant, (62360 ^{3} ml) (mm Hg)/(mole)(°K).

R_f = Response factor in area counts per ppm VCM.

R_s = Response factor, area counts/ppm.

T_l = Ambient laboratory temperature, °K.

TS = Total solids expressed as a decimal fraction.

T_2 = Equilibrium temperature, °K.

V_g = Volume of vapor phase, ml.

$$= V_v - \frac{m(TS)}{1.36} - \frac{m(1-TS)}{0.9653}$$

V_v = Vial volume,^{3} ml.

1.36 = Density of PVC at 90 °C, g/^{3} ml.

0.9653 = Density of water at 90 °C, g/^{3} ml.

12.2 Response Factor. If the calibration curve described in Section 10.3 passes through zero, an average response factor, R_f, may be used to facilitate computation of vinyl chloride sample concentrations.

12.2.1 To compute R_f, first compute a response factor, R_s, for each sample as follows:

$$R_s = \frac{A_s}{C_c} \qquad \text{Eq. 107-2}$$

12.2.2 Sum the individual response factors, and calculate R_f. If the calibration curve does not pass through zero, use the calibration curve to determine each sample concentration.

12.3 Residual Vinyl Chloride Monomer Concentration, (C_{rvc}) or Vinyl Chloride Monomer Concentration. Calculate C_{rvc} in ppm or mg/kg as follows:

$$C_{rvc} = \frac{A_s P_a}{R_f T_1}\left[\frac{M_v V_g}{Rm} + K_p(TS)T_2 K_w(1-TS)T_2\right] \qquad \text{Eq. 107-3}$$

Note: Results calculated using these equations represent concentration based on the total sample. To obtain results based on dry PVC content, divide by TS.

13.0 Method Performance

13.1 Range and Sensitivity. The lower limit of detection of vinyl chloride will vary according to the sampling and chromatographic system. The system should be capable of producing a measurement for a 50-ppm vinyl chloride standard that is at least

10 times the standard deviation of the system background noise level.

13.2 An interlaboratory comparison between seven laboratories of three resin samples, each split into three parts, yielded a standard deviation of 2.63 percent for a sample with a mean of 2.09 ppm, 4.16 percent for a sample with a mean of 1.66 ppm, and 5.29 percent for a sample with a mean of 62.66 ppm.

14.0 Pollution Prevention [Reserved]

15.0 Waste Management [Reserved]

16.0 References

1. B.F. Goodrich, Residual Vinyl Chloride Monomer Content of Polyvinyl Chloride Resins, Latex, Wet Cake, Slurry and Water Samples. B.F. Goodrich Chemical Group Standard Test Procedure No. 1005-E. B.F. Goodrich Technical Center, Avon Lake, Ohio. October 8, 1979.

2. Berens, A.R. The Diffusion of Vinyl Chloride in Polyvinyl Chloride. ACS-Division of Polymer Chemistry, Polymer Preprints 15 (2):197. 1974.

3. Berens, A.R. The Diffusion of Vinyl Chloride in Polyvinyl Chloride. ACS-Division of Polymer Chemistry, Polymer Preprints 15 (2):203. 1974.

4. Berens, A.R., *et. al.* Analysis for Vinyl Chloride in PVC Powders by Head-Space Gas Chromatography. Journal of Applied Polymer Science. 19:3169–3172. 1975.

5. Mansfield, R.A. The Evaluation of Henry's Law Constant (Kp) and Water Enhancement in the Perkin-Elmer Multifract F–40 Gas Chromatograph. B.F. Goodrich. Avon Lake, Ohio. February 10, 1978.

17.0 Tables, Diagrams, Flowcharts, and Validation Data [Reserved]

Method 108—Determination of Particulate and Gaseous Arsenic Emissions

Note: This method does not include all of the specifications (*e.g.*, equipment and supplies) and procedures (*e.g.*, sampling and analytical) essential to its performance. Some material is incorporated by reference from other methods in Appendix A to 40 CFR Part 60. Therefore, to obtain reliable results, persons using this method should have a thorough knowledge of at least the following additional test methods: Method 1, Method 2, Method 3, Method 5, and Method 12.

1.0 Scope and Application.

1.1 Analytes.

Analyte	CAS No.	Sensitivity
Arsenic compounds as arsenic (As)	7440–38–2	Lower limit 10 µg/ml or less.

1.2 Applicability. This method is applicable for the determination of inorganic As emissions from stationary sources as specified in an applicable subpart of the regulations.

1.3 Data Quality Objectives. Adherence to the requirements of this method will enhance the quality of the data obtained from air pollutant sampling methods.

2.0 Summary of Method

Particulate and gaseous As emissions are withdrawn isokinetically from the source and are collected on a glass mat filter and in water. The collected arsenic is then analyzed by means of atomic absorption spectrophotometry (AAS).

3.0 Definitions. [Reserved]

4.0 Interferences

Analysis for As by flame AAS is sensitive to the chemical composition and to the physical properties (*e.g.,* viscosity, pH) of the sample. The analytical procedure includes a check for matrix effects (Section 11.5).

5.0 Safety

5.1 This method may involve hazardous materials, operations, and equipment. This test method may not address all of the safety problems associated with its use. It is the responsibility of the user to establish appropriate safety and health practices and determine the applicability of regulatory limitations prior to performing this test method.

5.2 Corrosive reagents. The following reagents are hazardous. Personal protective equipment and safe procedures that prevent chemical splashes are recommended. If contact occurs, immediately flush with copious amounts of water for at least 15 minutes. Remove clothing under shower and decontaminate. Treat residual chemical burns as thermal burns.

5.2.1 Hydrochloric Acid (HCl). Highly corrosive liquid with toxic vapors. Vapors are highly irritating to eyes, skin, nose, and lungs, causing severe damage. May cause bronchitis, pneumonia, or edema of lungs. Exposure to concentrations of 0.13 to 0.2 percent can be lethal to humans in a few minutes. Provide ventilation to limit exposure. Reacts with metals, producing hydrogen gas.

5.2.2 Hydrogen Peroxide (H_2O_2). Very harmful to eyes. 30% H_2O_2 can burn skin, nose, and lungs.

5.2.3 Nitric Acid (HNO_3). Highly corrosive to eyes, skin, nose, and lungs. Vapors are highly toxic and can cause bronchitis, pneumonia, or edema of lungs. Reaction to inhalation may be delayed as long as 30 hours and still be fatal. Provide ventilation to limit exposure. Strong oxidizer. Hazardous reaction may occur with organic materials such as solvents.

5.2.4 Sodium Hydroxide (NaOH). Causes severe damage to eyes and skin. Inhalation causes irritation to nose, throat, and lungs. Reacts exothermically with small amounts of water.

6.0 Equipment and Supplies

6.1 Sample Collection. A schematic of the sampling train used in performing this method is shown in Figure 108–1; it is similar to the Method 5 sampling train of 40 CFR Part 60, Appendix A. The following items are required for sample collection:

6.1.1 Probe Nozzle, Probe Liner, Pitot Tube, Differential Pressure Gauge, Filter Holder, Filter Heating System, Temperature Sensor, Metering System, Barometer, and Gas Density Determination Equipment. Same as Method 5, Sections 6.1.1.1 to 6.1.1.7, 6.1.1.9, 6.1.2, and 6.1.3, respectively.

6.1.2 Impingers. Four impingers connected in series with leak-free ground-glass fittings or any similar leak-free noncontaminating fittings. For the first, third, and fourth impingers, use the Greenburg-Smith design, modified by replacing the tip with a 1.3-cm ID (0.5-in.) glass tube extending to about 1.3 cm (0.5 in.) from the bottom of the flask. For the second impinger, use the Greenburg-Smith design with the standard tip. Modifications (*e.g.,* flexible connections between the impingers, materials other than glass, or flexible vacuum lines to connect the filter holder to the condenser) are subject to the approval of the Administrator.

6.1.3 Temperature Sensor. Place a temperature sensor, capable of measuring temperature to within 1 °C (2 °F), at the outlet of the fourth impinger for monitoring purposes.

6.2 Sample Recovery. The following items are required for sample recovery:

6.2.1 Probe-Liner and Probe-Nozzle Brushes, Petri Dishes, Graduated Cylinder and/or Balance, Plastic Storage Containers, and Funnel and Rubber Policeman. Same as Method 5, Sections 6.2.1 and 6.2.4 to 6.2.8, respectively.

6.2.2 Wash Bottles. Polyethylene (2).

6.2.3 Sample Storage Containers. Chemically resistant, polyethylene or

polypropylene for glassware washes, 500- or 1000-ml.

6.3 Analysis. The following items are required for analysis:

6.3.1 Spectrophotometer. Equipped with an electrodeless discharge lamp and a background corrector to measure absorbance at 193.7 nanometers (nm). For measuring samples having less than 10 µg As/ml, use a vapor generator accessory or a graphite furnace.

6.3.2 Recorder. To match the output of the spectrophotometer.

6.3.3 Beakers. 150 ml.

6.3.4 Volumetric Flasks. Glass 50-, 100-, 200-, 500-, and 1000-ml; and polypropylene, 50-ml.

6.3.5 Balance. To measure within 0.5 g.

6.3.6 Volumetric Pipets. 1-, 2-, 3-, 5-, 8-, and 10-ml.

6.3.7 Oven.

6.3.8 Hot Plate.

7.0 Reagents and Standards

Unless otherwise indicated, it is intended that all reagents conform to the specifications established by the Committee on Analytical Reagents of the American Chemical Society, where such specifications are available; otherwise, use the best available grade.

7.1 The following reagents are required for sample collection:

7.1.1 Filters. Same as Method 5, Section 7.1.1, except that the filters need not be unreactive to SO_2.

7.1.2 Silica Gel, Crushed Ice, and Stopcock Grease. Same as Method 5, Sections 7.1.2, 7.1.4, and 7.1.5, respectively.

7.1.3 Water. Deionized distilled to meet ASTM D 1193–77 or 91 (incorporated by reference-see § 61.18), Type 3. When high concentrations of organic matter are not expected to be present, the $KMnO_4$ test for oxidizable organic matter may be omitted.

7.2 Sample Recovery.

7.2.1 0.1 N NaOH. Dissolve 4.00 g of NaOH in about 500 ml of water in a 1-liter volumetric flask. Then, dilute to exactly 1.0 liter with water.

7.3 Analysis. The following reagents and standards are required for analysis:

7.3.1 Water. Same as Section 7.1.3.

7.3.2 Sodium Hydroxide, 0.1 N. Same as in Section 7.2.1.

7.3.3 Sodium Borohydride ($NaBH_4$), 5 Percent Weight by Volume (W/V). Dissolve 50.0 g of $NaBH_4$ in about 500 ml of 0.1 N NaOH in a 1-liter volumetric flask. Then, dilute to exactly 1.0 liter with 0.1 N NaOH.

7.3.4 Hydrochloric Acid, Concentrated.

7.3.5 Potassium Iodide (KI), 30 Percent (W/V). Dissolve 300 g of KI in 500 ml of water in a 1 liter volumetric flask. Then, dilute to exactly 1.0 liter with water.

7.3.6 Nitric Acid, Concentrated.

7.3.7 Nitric Acid, 0.8 N. Dilute 52 ml of concentrated HNO_3 to exactly 1.0 liter with water.

7.3.8 Nitric Acid, 50 Percent by Volume (V/V). Add 50 ml concentrated HNO_3 to 50 ml water.

7.3.9 Stock Arsenic Standard, 1 mg As/ml. Dissolve 1.3203 g of primary standard grade As_2O_3 in 20 ml of 0.1 N NaOH in a 150 ml beaker. Slowly add 30 ml of concentrated HNO_3. Heat the resulting solution and evaporate just to dryness. Transfer the residue quantitatively to a 1-liter volumetric flask, and dilute to 1.0 liter with water.

7.3.10 Arsenic Working Solution, 1.0 µg As/ml. Pipet exactly 1.0 ml of stock arsenic standard into an acid-cleaned, appropriately labeled 1-liter volumetric flask containing about 500 ml of water and 5 ml of concentrated HNO_3. Dilute to exactly 1.0 liter with water.

7.3.11 Air. Suitable quality for AAS analysis.

7.3.12 Acetylene. Suitable quality for AAS analysis.

7.3.13 Nickel Nitrate, 5 Percent Ni (W/V). Dissolve 24.780 g of nickel nitrate hexahydrate [$Ni(NO_3)_2 6H_2O$] in water in a 100-ml volumetric flask, and dilute to 100 ml with water.

7.3.14 Nickel Nitrate, 1 Percent Ni (W/V). Pipet 20 ml of 5 percent nickel nitrate solution into a 100-ml volumetric flask, and dilute to exactly 100 ml with water.

7.3.15 Hydrogen Peroxide, 3 Percent by Volume. Pipet 50 ml of 30 percent H_2O_2 into a 500-ml volumetric flask, and dilute to exactly 500 ml with water.

7.3.16 Quality Assurance Audit Samples. When making compliance determinations, and upon availability, audit samples may be obtained from the appropriate EPA regional Office or from the responsible enforcement authority.

Note: The responsible enforcement authority should be notified at least 30 days prior to the test date to allow sufficient time for sample delivery.

8.0 Sample Collection, Preservation, Transport, and Storage

8.1 Pretest Preparation. Follow the general procedure given in Method 5, Section 8.1, except the filter need not be weighed, and the 200 ml of 0.1N NaOH and Container 4 should be tared to within 0.5 g.

8.2 Preliminary Determinations. Follow the general procedure given in Method 5, Section 8.2, except select the nozzle size to maintain isokinetic sampling rates below 28 liters/min (1.0 cfm).

8.3 Preparation of Sampling Train. Follow the general procedure given in Method 5, Section 8.3.

8.4 Leak-Check Procedures. Same as Method 5, Section 8.4.

8.5 Sampling Train Operation. Follow the general procedure given in Method 5, Section 8.5, except maintain isokinetic sampling flow rates below 28 liters/min (1.0 cfm). For each run, record the data required on a data sheet similar to the one shown in Figure 108–2.

8.6 Calculation of Percent Isokinetic. Same as Method 5, Section 8.6.

8.7 Sample Recovery. Same as Method 5, Section 8.7, except that 0.1 N NaOH is used as the cleanup solvent instead of acetone and that the impinger water is treated as follows:

8.7.1 Container Number 4 (Impinger Water). Clean each of the first three impingers and connecting glassware in the following manner:

8.7.1.1 Wipe the impinger ball joints free of silicone grease, and cap the joints.

8.7.1.2 Rotate and agitate each of the first two impingers, using the impinger contents as a rinse solution.

8.7.1.3 Transfer the liquid from the first three impingers to Container Number 4. Remove the outlet ball-joint cap, and drain the contents through this opening. Do not separate the impinger parts (inner and outer tubes) while transferring their contents to the container.

8.7.1.4 Weigh the contents of Container No. 4 to within 0.5 g. Record in the log the weight of liquid along with a notation of any color or film observed in the impinger catch. The weight of liquid is needed along with the silica gel data to calculate the stack gas moisture content.

Note: Measure and record the total amount of 0.1 N NaOH used for rinsing under Sections 8.7.1.5 and 8.7.1.6.

8.7.1.5 Pour approximately 30 ml of 0.1 NaOH into each of the first two impingers, and agitate the impingers. Drain the 0.1 N NaOH through the outlet arm of each impinger into Container Number 4. Repeat this operation a second time; inspect the impingers for any abnormal conditions.

8.7.1.6 Wipe the ball joints of the glassware connecting the impingers and the back half of the filter holder free of silicone grease, and rinse each piece of glassware twice with 0.1 N NaOH; transfer this rinse into Container Number 4. (DO NOT RINSE or brush the glass-fritted filter support.) Mark the height of the fluid level to determine whether leakage occurs during transport. Label the container to identify clearly its contents.

8.8 Blanks.

8.8.1 Sodium Hydroxide. Save a portion of the 0.1 N NaOH used for cleanup as a blank. Take 200 ml of this solution directly from the wash bottle being used and place it in a plastic sample container labeled ''NaOH blank.''

8.8.2 Water. Save a sample of the water, and place it in a container labeled ''H_2O blank.''

8.8.3 Filter. Save two filters from each lot of filters used in sampling. Place these filters in a container labeled ''filter blank.''

9.0 Quality Control

9.1 Miscellaneous Quality Control Measures.

Section	Quality control measure	Effect
8.4, 10.1	Sampling equipment leak-checks and calibration	Ensures accuracy and precision of sampling measurements.
10.4	Spectrophotometer calibration	Ensures linearity of spectrophotometer response to standards.
11.5	Check for matrix effects	Eliminates matrix effects.
11.6	Audit sample analysis	Evaluates analyst's technique and standards preparation.

9.2 Volume Metering System Checks. Same as Method 5, Section 9.2.

10.0 Calibration and Standardization

Note: Maintain a laboratory log of all calibrations.

10.1 Sampling Equipment. Same as Method 5, Section 10.0.

10.2 Preparation of Standard Solutions.

10.2.1 For the high level procedure, pipet 1, 3, 5, 8, and 10 ml of the 1.0 mg As/ml stock solution into separate 100 ml volumetric flasks, each containing 5 ml of concentrated HNO_3. Dilute to the mark with water.

10.2.2 For the low level vapor generator procedure, pipet 1, 2, 3, and 5 ml of 1.0 µg As/ml standard solution into separate reaction tubes. Dilute to the mark with water.

10.2.3 For the low level graphite furnace procedure, pipet 1, 5, 10 and 15 ml of 1.0 µg As/ml standard solution into separate flasks along with 2 ml of the 5 percent nickel nitrate solution and 10 ml of the 3 percent H_2O_2 solution. Dilute to the mark with water.

10.3 Calibration Curve. Analyze a 0.8 N HNO_3 blank and each standard solution according to the procedures outlined in section 11.4.1. Repeat this procedure on each standard solution until two consecutive peaks agree within 3 percent of their average value. Subtract the average peak height (or peak area) of the blank—which must be less than 2 percent of recorder full scale—from the averaged peak height of each standard solution. If the blank absorbance is greater than 2 percent of full-scale, the probable cause is As contamination of a reagent or carry-over of As from a previous sample. Prepare the calibration curve by plotting the corrected peak height of each standard solution versus the corresponding final total As weight in the solution.

10.4 Spectrophotometer Calibration Quality Control. Calculate the least squares slope of the calibration curve. The line must pass through the origin or through a point no further from the origin than ±2 percent of the recorder full scale. Multiply the corrected peak height by the reciprocal of the least squares slope to determine the distance each calibration point lies from the theoretical calibration line. The difference between the calculated concentration values and the actual concentrations (*e.g.,* 1, 3, 5, 8, and 10 mg As for the high-level procedure) must be less than 7 percent for all standards.

Note: For instruments equipped with direct concentration readout devices, preparation of a standard curve will not be necessary. In all cases, follow calibration and operational procedures in the manufacturers' instruction manual.

11.0 Analytical Procedure

11.1 Sample Loss Check. Prior to analysis, check the liquid level in Containers Number 2 and Number 4. Note on the analytical data sheet whether leakage occurred during transport. If a noticeable amount of leakage occurred, either void the sample or take steps, subject to the approval of the Administrator, to adjust the final results.

11.2 Sample Preparation.

11.2.1 Container Number 1 (Filter). Place the filter and loose particulate matter in a 150 ml beaker. Also, add the filtered solid material from Container Number 2 (see Section 11.2.2). Add 50 ml of 0.1 N NaOH. Then stir and warm on a hot plate at low heat (do not boil) for about 15 minutes. Add 10 ml of concentrated HNO_3, bring to a boil, then simmer for about 15 minutes. Filter the solution through a glass fiber filter. Wash with hot water, and catch the filtrate in a clean 150 ml beaker. Boil the filtrate, and evaporate to dryness. Cool, add 5 ml of 50 percent HNO_3, and then warm and stir. Allow to cool. Transfer to a 50-ml volumetric flask, dilute to volume with water, and mix well.

11.2.2 Container Number 2 (Probe Wash).

11.2.2.1 Filter (using a glass fiber filter) the contents of Container Number 2 into a 200 ml volumetric flask. Combine the filtered (solid) material with the contents of Container Number 1 (Filter).

11.2.2.2 Dilute the filtrate to exactly 200 ml with water. Then pipet 50 ml into a 150 ml beaker. Add 10 ml of concentrated HNO_3, bring to a boil, and evaporate to dryness. Allow to cool, add 5 ml of 50 percent HNO_3, and then warm and stir. Allow the solution to cool, transfer to a 50-ml volumetric flask, dilute to volume with water, and mix well.

11.2.3 Container Number 4 (Impinger Solution). Transfer the contents of Container Number 4 to a 500 ml volumetric flask, and dilute to exactly 500-ml with water. Pipet 50 ml of the solution into a 150-ml beaker. Add 10 ml of concentrated HNO_3, bring to a boil, and evaporate to dryness. Allow to cool, add 5 ml of 50 percent HNO_3, and then warm and stir. Allow the solution to cool, transfer to a 50-ml volumetric flask, dilute to volume with water, and mix well.

11.2.4 Filter Blank. Cut each filter into strips, and treat each filter individually as directed in Section 11.2.1, beginning with the sentence, ''Add 50 ml of 0.1 N NaOH.''

11.2.5 Sodium Hydroxide and Water Blanks. Treat separately 50 ml of 0.1 N NaOH and 50 ml water, as directed under Section 11.2.3, beginning with the sentence, ''Pipet 50 ml of the solution into a 150-ml beaker.''

11.3 Spectrophotometer Preparation. Turn on the power; set the wavelength, slit width, and lamp current. Adjust the background corrector as instructed by the manufacturer's manual for the particular atomic absorption spectrophotometer. Adjust the burner and flame characteristics as necessary.

11.4 Analysis. Calibrate the analytical equipment and develop a calibration curve as outlined in Sections 10.2 through 10.4.

11.4.1 Arsenic Samples. Analyze an appropriately sized aliquot of each diluted sample (from Sections 11.2.1

through 11.2.3) until two consecutive peak heights agree within 3 percent of their average value. If applicable, follow the procedures outlined in Section 11.4.1.1. If the sample concentration falls outside the range of the calibration curve, make an appropriate dilution with 0.8 N HNO_3 so that the final concentration falls within the range of the curve. Using the calibration curve, determine the arsenic concentration in each sample fraction.

Note: Because instruments vary between manufacturers, no detailed operating instructions will be given here. Instead, the instrument manufacturer's detailed operating instructions should be followed.

11.4.1.1 Arsenic Determination at Low Concentration. The lower limit of flame AAS is 10 µg As/ml. If the arsenic concentration of any sample is at a lower level, use the graphite furnace or vapor generator which is available as an accessory component. Flame, graphite furnace, or vapor generators may be used for samples whose concentrations are between 10 and 30 µg/ml. Follow the manufacturer's instructions in the use of such equipment.

11.4.1.1.1 Vapor Generator Procedure. Place a sample containing between 0 and 5 µg of arsenic in the reaction tube, and dilute to 15 ml with water. Since there is some trial and error involved in this procedure, it may be necessary to screen the samples by conventional atomic absorption until an approximate concentration is determined. After determining the approximate concentration, adjust the volume of the sample accordingly. Pipet 15 ml of concentrated HCl into each tube. Add 1 ml of 30 percent KI solution. Place the reaction tube into a 50 °C (120 °F) water bath for 5 minutes. Cool to room temperature. Connect the reaction tube to the vapor generator assembly. When the instrument response has returned to baseline, inject 5.0 ml of 5 percent $NaBH_4$, and integrate the resulting spectrophotometer signal over a 30-second time period.

11.4.1.1.2 Graphite Furnace Procedure. Dilute the digested sample so that a 5 ml aliquot contains less than 1.5 µg of arsenic. Pipet 5 ml of this digested solution into a 10-ml volumetric flask. Add 1 ml of the 1 percent nickel nitrate solution, 0.5 ml of 50 percent HNO_3, and 1 ml of the 3 percent hydrogen peroxide and dilute to 10 ml with water. The sample is now ready for analysis.

11.4.1.2 Run a blank (0.8 N HNO_3) and standard at least after every five samples to check the spectrophotometer calibration. The peak height of the blank must pass through a point no further from the origin than ±2 percent of the recorder full scale. The difference between the measured concentration of the standard (the product of the corrected average peak height and the reciprocal of the least squares slope) and the actual concentration of the standard must be less than 7 percent, or recalibration of the analyzer is required.

11.4.1.3 Determine the arsenic concentration in the filter blank (i.e., the average of the two blank values from each lot).

11.4.2 Container Number 3 (Silica Gel). This step may be conducted in the field. Weigh the spent silica gel (or silica gel plus impinger) to the nearest 0.5 g; record this weight.

11.5 Check for matrix effects on the arsenic results. Same as Method 12, Section 11.5.

11.6 Audit Sample Analysis.

11.6.1 When the method is used to analyze samples to demonstrate compliance with a source emission regulation, a set of EPA audit samples must be analyzed, subject to availability.

11.6.2 Concurrently analyze the audit samples and the compliance samples in the same manner to evaluate the technique of the analyst and the standards preparation.

Note: It is recommended that known quality control samples be analyzed prior to the compliance and audit sample analyses to optimize the system accuracy and precision. These quality control samples may be obtained by contacting the appropriate EPA regional Office or the responsible enforcement authority.

11.6.3 The same analyst, analytical reagents, and analytical system shall be used for the compliance samples and the EPA audit samples. If this condition is met, duplicate auditing of subsequent compliance analyses for the same enforcement agency within a 30-day period is waived. An audit sample set may not be used to validate different sets of compliance samples under the jurisdiction of separate enforcement agencies, unless prior arrangements have been made with both enforcement agencies.

11.7 Audit Sample Results.

11.7.1 Calculate the audit sample concentrations in g/m_3 and submit results using the instructions provided with the audit samples.

11.7.2 Report the results of the audit samples and the compliance determination samples along with their identification numbers, and the analyst's name to the responsible enforcement authority. Include this information with reports of any subsequent compliance analyses for the same enforcement authority during the 30-day period.

11.7.3 The concentrations of the audit samples obtained by the analyst shall agree within 10 percent of the actual concentrations. If the 10 percent specification is not met, reanalyze the compliance and audit samples, and include initial and reanalysis values in the test report.

11.7.4 Failure to meet the 10 percent specification may require retests until the audit problems are resolved. However, if the audit results do not affect the compliance or noncompliance status of the affected facility, the Administrator may waive the reanalysis requirement, further audits, or retests and accept the results of the compliance test. While steps are being taken to resolve audit analysis problems, the Administrator may also choose to use the data to determine the compliance or noncompliance status of the affected facility.

12.0 Data Analysis and Calculations

12.1 Nomenclature.

B_{ws} = Water in the gas stream, proportion by volume.

C_a = Concentration of arsenic as read from the standard curve, µg/ml.

C_c = Actual audit concentration, g/m^3.

C_d, = Determined audit concentration, g/m^3.

C_s = Arsenic concentration in stack gas, dry basis, converted to standard conditions, g/dsm^3 (gr/dscf).

E_a = Arsenic mass emission rate, g/hr (lb/hr).

F_d = Dilution factor (equals 1 if the sample has not been diluted).

I = Percent of isokinetic sampling.

m_{bi} = Total mass of all four impingers and contents before sampling, g.

m_{fi} = Total mass of all four impingers and contents after sampling, g.

m_n = Total mass of arsenic collected in a specific part of the sampling train, µg.

m_t = Total mass of arsenic collected in the sampling train, µg.

T_m = Absolute average dry gas meter temperature (see Figure 108–2), °K (°R).

V_m = Volume of gas sample as measured by the dry gas meter, dry basis, m^3 (ft^3).

$V_{m(std)}$ = Volume of gas sample as measured by the dry gas meter, corrected to standard conditions, m^3 (ft^3).

V_n = Volume of solution in which the arsenic is contained, ml.

$V_{w(std)}$ = Volume of water vapor collected in the sampling train, corrected to standard conditions, m^3 (ft^3).

ΔH = Average pressure differential across the orifice meter (see Figure 108–2), mm H_2O (in. H_2O).

12.2 Average Dry Gas Meter Temperatures (T_m) and Average Orifice Pressure Drop (ΔH). See data sheet (Figure 108–2).

12.3 Dry Gas Volume. Using data from this test, calculate $V_{m(std)}$ according to the procedures outlined in Method 5, Section 12.3.

12.4 Volume of Water Vapor.

$$V_{w(std)} = K_2\left(m_{fi} - m_{bi}\right) \qquad \text{Eq. 108-1}$$

Where:

K_2 = 0.001334 m^3/g for metric units.
= 0.047012 ft^3/g for English units.

12.5 Moisture Content.

$$B_{ws} = \frac{V_{w(std)}}{V_{m(std)} + V_{w(std)}} \qquad \text{Eq. 108-2}$$

12.6 Amount of Arsenic Collected.

12.6.1 Calculate the amount of arsenic collected in each part of the sampling train, as follows:

$$m_n = C_a F_d V_n \qquad \text{Eq. 108-3}$$

12.6.2 Calculate the total amount of arsenic collected in the sampling train as follows:

$$m_t = m_{(filters)} + m_{(probe)} + m_{(impingers)} - m_{(filter\ blank)} - m_{(NaOH\ blank)} - m_{(water\ blank)} \qquad \text{Eq. 108-4}$$

12.7 Calculate the arsenic concentration in the stack gas (dry basis, adjusted to standard conditions) as follows:

$$C_s = K_3\left(m_t / V_{m(std)}\right) \qquad \text{Eq. 108-5}$$

Where:

$K_3 = 10^{-6}$ g/μg for metric units
$= 1.54 \times 10^{-5}$ gr/μg for English units

12.8 Stack Gas Velocity and Volumetric Flow Rate. Calculate the average stack gas velocity and volumetric flow rate using data obtained in this method and the equations in Sections 12.2 and 12.3 of Method 2.

12.9 Pollutant Mass Rate. Calculate the arsenic mass emission rate as follows:

$$E_a = C_s Q_{sd} \qquad \text{Eq. 108-6}$$

12.10 Isokinetic Variation. Same as Method 5, Section 12.11.

13.0 Method Performance

13.1 Sensitivity. The lower limit of flame AAS 10 μg As/ml. The analytical procedure includes provisions for the use of a graphite furnace or vapor generator for samples with a lower arsenic concentration.

14.0 Pollution Prevention. [Reserved]

15.0 Waste Management. [Reserved]

16.0 References.

Same as References 1 through 9 of Method 5, Section 17.0, with the addition of the following:

1. Perkin Elmer Corporation. Analytical Methods for Atomic Absorption Spectrophotometry. 303–0152. Norwalk, Connecticut. September 1976. pp. 5–6.

2. Standard Specification for Reagent Water. In: Annual Book of American Society for Testing and Materials Standards. Part 31: Water, Atmospheric Analysis. American Society for Testing and Materials. Philadelphia, PA. 1974. pp. 40–42.

3. Stack Sampling Safety Manual (Draft). U.S. Environmental Protection Agency, Office of Air Quality Planning and Standard, Research Triangle Park, NC. September 1978.

17.0 Tables, Diagrams, Flowcharts, and Validation Data

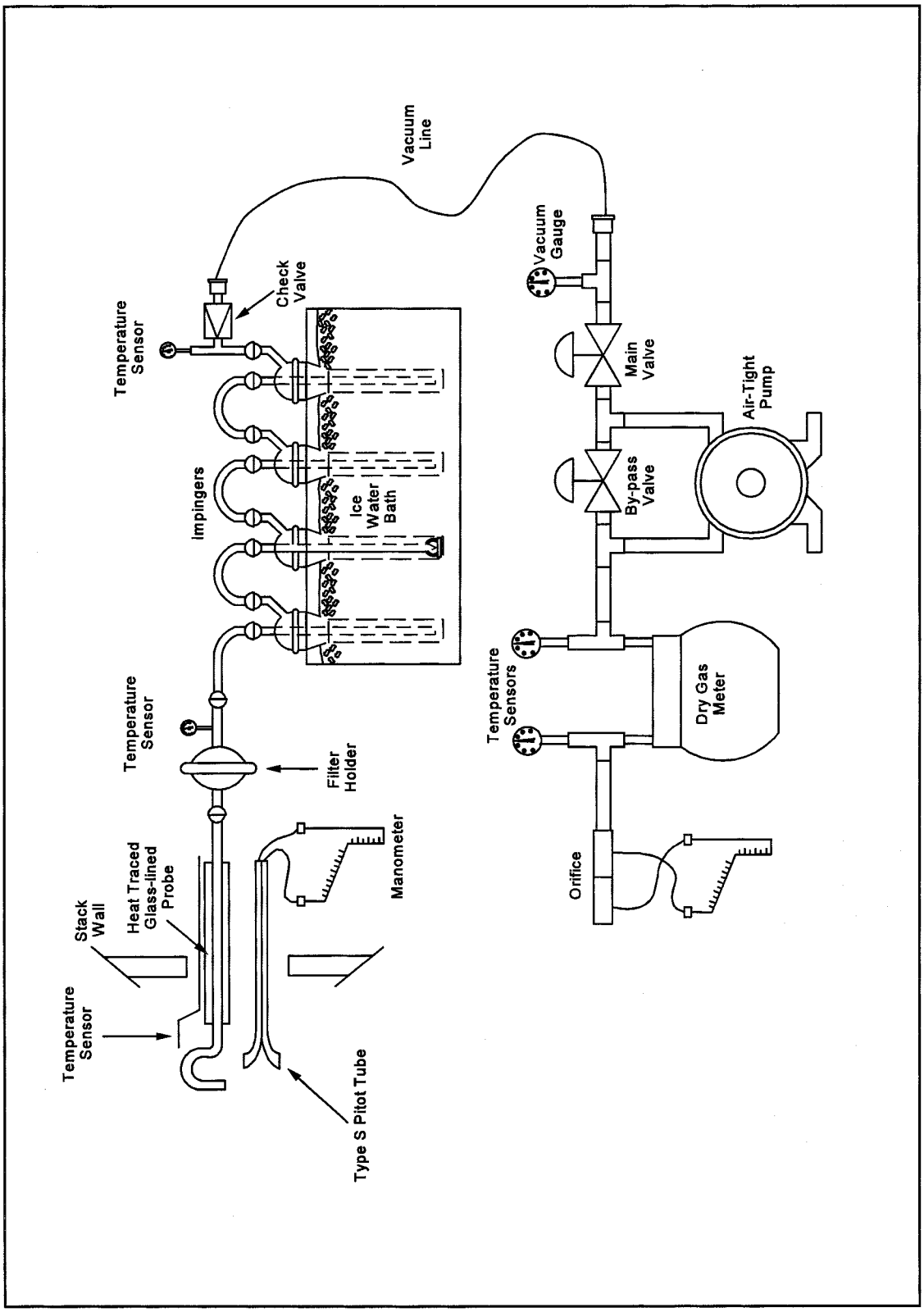

Figure 108-1. Arsenic Sampling Train

Plant _____
Location _____
Operator _____
Date _____
Run No. _____
Sample box No. _____
Meter box No. _____
Meter $\Delta H@$ _____
C factor _____
Pitot tube coefficient, C_p _____

SCHEMATIC OF STACK CROSS SECTION

Ambient temperature _____
Barometric pressure _____
Assumed moisture, % _____
Probe length, (ft.) _____
Nozzle identification No. _____
Average calibrated nozzle diameter, (in.) _____
Probe heater setting _____
Leak rate, (cfm) _____
Probe liner material _____

Traverse point number	Sampling time	Vacuum	Stack temperature	Velocity head	Pressure differential across orifice meter	Gas meter reading	Gas sample temperature at dry gas meter		Filter temperature	Temperature of gas leaving condenser or last impinger
							Inlet	Outlet		
	min.	(in.Hg)	(T_s) (°F)	(ΔP_s) (in. H_2O)	(in. H_2O)	(ft^3)	(°F)	(°F)	(°F)	(°F)
Total							Avg.	Avg.		
Average							Avg.			

Figure 108-2. Arsenic Field Data Sheet.

BILLING CODE 6560–50–C

Method 108A—Determination of Arsenic Content in Ore Samples From Nonferrous Smelters

Note: This method does not include all of the specifications (*e.g.,* equipment and supplies) and procedures (*e.g.,* sampling and analytical) essential to its performance. Some material is incorporated by reference from other methods in Appendix A to 40 CFR part 60. Therefore, to obtain reliable results, persons using this method should have a thorough knowledge of Method 12.

1.0 Scope and Application

1.1 Analytes.

Analyte	CAS No.	Sensitivity
Arsenic compounds as arsenic (As).	7440–38–2	Lower limit 10 μg/ml or less.

1.2 Applicability. This method applies to the determination of inorganic As content of process ore and reverberatory matte samples from nonferrous smelters and other sources as specified in an applicable subpart of the regulations.

1.3 Data Quality Objectives. Adherence to the requirements of this method will enhance the quality of the data obtained from air pollutant sampling methods.

2.0 Summary of Method

Arsenic bound in ore samples is liberated by acid digestion and analyzed by flame atomic absorption spectrophotometry (AAS).

3.0 Definitions [Reserved]

4.0 Interferences

Analysis for As by flame AAS is sensitive to the chemical composition and to the physical properties (*e.g.,* viscosity, pH) of the sample. The analytical procedure includes a check for matrix effects (section 11.5).

5.0 Safety

5.1 Disclaimer. This method may involve hazardous materials, operations, and equipment. This test method may not address all of the safety problems associated with its use. It is the responsibility of the user to establish appropriate safety and health practices and determine the applicability of regulatory limitations prior to performing this test method.

5.2 Corrosive Reagents. The following reagents are hazardous. Personal protective equipment and safe procedures that prevent chemical splashes are recommended. If contact occurs, immediately flush with copious amounts of water for at least 15 minutes. Remove clothing under shower and decontaminate. Treat residual chemical burns as thermal burns.

5.2.1 Hydrochloric Acid (HCl). Highly corrosive liquid with toxic vapors. Vapors are highly irritating to eyes, skin, nose, and lungs, causing severe damage. May cause bronchitis, pneumonia, or edema of lungs. Exposure to concentrations of 0.13 to 0.2 percent can be lethal to humans in a few minutes. Provide ventilation to limit exposure. Reacts with metals, producing hydrogen gas.

5.2.2 Hydrofluoric Acid (HF). Highly corrosive to eyes, skin, nose, throat, and lungs. Reaction to exposure may be delayed by 24 hours or more. Provide ventilation to limit exposure.

5.2.3 Hydrogen Peroxide (H_2O_2). Very harmful to eyes. 30% H_2O_2 can burn skin, nose, and lungs.

5.2.4 Nitric Acid (HNO_3). Highly corrosive to eyes, skin, nose, and lungs. Vapors are highly toxic and can cause bronchitis, pneumonia, or edema of lungs. Reaction to inhalation may be delayed as long as 30 hours and still be fatal. Provide ventilation to limit exposure. Strong oxidizer. Hazardous reaction may occur with organic materials such as solvents.

5.2.5 Sodium Hydroxide (NaOH). Causes severe damage to eyes and skin. Inhalation causes irritation to nose, throat, and lungs. Reacts exothermically with limited amounts of water.

6.0 Equipment and Supplies

6.1 Sample Collection and Preparation. The following items are required for sample collection and preparation:

6.1.1 Parr Acid Digestion Bomb. Stainless steel with vapor-tight Teflon cup and cover.

6.1.2 Volumetric Pipets. 2- and 5-ml sizes.

6.1.3 Volumetric Flask. 50-ml polypropylene with screw caps, (one needed per standard).

6.1.4 Funnel. Polyethylene or polypropylene.

6.1.5 Oven. Capable of maintaining a temperature of approximately 105 °C (221 °F).

6.1.6 Analytical Balance. To measure to within 0.1 mg.

6.2 Analysis. The following items are required for analysis:

6.2.1 Spectrophotometer and Recorder. Equipped with an electrodeless discharge lamp and a background corrector to measure absorbance at 193.7 nm. For measuring samples having less than 10 μg As/ml, use a graphite furnace or vapor generator accessory. The recorder shall match the output of the spectrophotometer.

6.2.2 Volumetric Flasks. Class A, 50-ml (one needed per sample and blank), 500-ml, and 1-liter.

6.2.3 Volumetric Pipets. Class A, 1-, 5-, 10-, and 25-ml sizes.

7.0 Reagents and Standards.

Unless otherwise indicated, it is intended that all reagents conform to the specifications established by the Committee on Analytical Reagents of the American Chemical Society, where such specifications are available; otherwise, use the best available grade.

7.1 Sample Collection and Preparation. The following reagents are required for sample collection and preparation:

7.1.1 Water. Deionized distilled to meet ASTM D 1193–77 or 91 Type 3 (incorporated by reference—See § 61.18). When high concentrations of organic matter are not expected to be present, the $KMnO_4$ test for oxidizable organic matter may be omitted. Use in all dilutions requiring water.

7.1.2 Nitric Acid Concentrated.

7.1.3 Nitric Acid, 0.5 N. In a 1-liter volumetric flask containing water, add 32 ml of concentrated HNO_3 and dilute to volume with water.

7.1.4 Hydrofluoric Acid, Concentrated.

7.1.5 Potassium Chloride (KCl) Solution, 10 percent weight by volume (W/V). Dissolve 10 g KCl in water, add 3 ml concentrated HNO_3, and dilute to 100 ml.

7.1.6 Filter. Teflon filters, 3-micron porosity, 47-mm size. (Available from Millipore Co., type FS, Catalog Number FSLW04700.)

7.1.7 Sodium Borohydride ($NaBH_4$), 5 Percent (W/V). Dissolve 50.0 g of $NaBH_4$ in about 500 ml of 0.1 N NaOH in a 1-liter volumetric flask. Then, dilute to exactly 1.0 liter with 0.1 N NaOH.

7.1.8 Nickel Nitrate, 5 Percent Ni (W/V). Dissolve 24.780 g of nickel nitrate hexahydrate [$Ni(NO_3)_2$ $6H_2O$] in water in a 100-ml volumetric flask, and dilute to 100 ml with water.

7.1.9 Nickel Nitrate, 1 Percent Ni (W/V). Pipet 20 ml of 5 percent nickel nitrate solution into a 100-ml volumetric flask, and dilute to 100 ml with water.

7.2 Analysis. The following reagents and standards are required for analysis:

7.2.1 Water. Same as in Section 7.1.1.

7.2.2 Sodium Hydroxide, 0.1 N. Dissolve 2.00 g of NaOH in water in a 500-ml volumetric flask. Dilute to volume with water.

7.2.3 Nitric Acid, 0.5 N. Same as in Section 7.1.3.

7.2.4 Potassium Chloride Solution, 10 percent. Same as in Section 7.1.5.

7.2.5 Hydrochloric Acid, Concentrated.

7.2.6 Potassium Iodide (KI), 30 Percent (W/V). Dissolve 300 g of KI in about 500 ml of water in a 1-liter volumetric flask. Then, dilute to exactly 1.0 liter with water.

7.2.7 Hydrogen Peroxide, 3 Percent by Volume. Pipet 50 ml of 30 percent H_2O_2 into a 500-ml volumetric flask, and dilute to exactly 500 ml with water.

7.2.8 Stock Arsenic Standard, 1 mg As/ml. Dissolve 1.3203 g of primary grade As_2O_3 in 20 ml of 0.1 N NaOH. Slowly add 30 ml of concentrated HNO_3, and heat in an oven at 105 °C (221 °F) for 2 hours. Allow to cool, and dilute to 1 liter with deionized distilled water.

7.2.9 Nitrous Oxide. Suitable quality for AAS analysis.

7.2.10 Acetylene. Suitable quality for AAS analysis.

7.2.11 Quality Assurance Audit Samples. When making compliance determinations, and upon availability, audit samples may be obtained from the appropriate EPA regional Office or from the responsible enforcement authority.

Note: The responsible enforcement authority should be notified at least 30 days prior to the test date to allow sufficient time for sample delivery.

8.0 Sample Collection, Preservation, Transport, and Storage

8.1 Sample Collection. A sample that is representative of the ore lot to be tested must be taken prior to analysis. (A portion of the samples routinely collected for metals analysis may be used provided the sample is representative of the ore being tested.)

8.2 Sample Preparation. The sample must be ground into a finely pulverized state.

9.0 Quality Control

Section	Quality control measure	Effect
10.2	Spectrophotometer calibration	Ensure linearity of spectrophotometer response to standards.
11.5	Check for matrix effects	Eliminate matrix effects
11.6	Audit sample analysis	Evaluate analyst's technique and standards preparation.

10.0 Calibration and Standardizations

Note: Maintain a laboratory log of all calibrations.

10.1 Preparation of Standard Solutions. Pipet 1, 5, 10, and 25 ml of the stock As solution into separate 100-ml volumetric flasks. Add 10 ml KCl solution and dilute to the mark with 0.5 N HNO_3. This will give standard concentrations of 10, 50, 100, and 250 µg As/ml. For low-level arsenic samples that require the use of a graphite furnace or vapor generator, follow the procedures in Section 11.3:1. Dilute 10 ml of KCl solution to 100 ml with 0.5 N HNO_3 and use as a reagent blank.

10.2 Calibration Curve. Analyze the reagent blank and each standard solution according to the procedures outlined in Section 11.3. Repeat this procedure on each standard solution until two consecutive peaks agree within 3 percent of their average value. Subtract the average peak height (or peak area) of the blank—which must be less than 2 percent of recorder full scale—from the averaged peak heights of each standard solution. If the blank absorbance is greater than 2 percent of full-scale, the probable cause is Hg contamination of a reagent or carry-over of As from a previous sample. Prepare the calibration curve by plotting the corrected peak height of each standard solution versus the corresponding final total As weight in the solution.

10.3 Spectrophotometer Calibration Quality Control. Calculate the least squares slope of the calibration curve. The line must pass through the origin or through a point no further from the origin than ±2 percent of the recorder full scale. Multiply the corrected peak height by the reciprocal of the least squares slope to determine the distance each calibration point lies from the theoretical calibration line. The difference between the calculated concentration values and the actual concentrations must be less than 7 percent for all standards.

Note: For instruments equipped with direct concentration readout devices, preparation of a standard curve will not be necessary. In all cases, follow calibration and operational procedures in the manufacturer's instruction manual.

11.0 Analytical Procedure

11.1 Sample Preparation. Weigh 50 to 500 mg of finely pulverized sample to the nearest 0.1 mg. Transfer the sample into the Teflon cup of the digestion bomb, and add 2 ml each of concentrated HNO_3 and HF. Seal the bomb immediately to prevent the loss of any volatile arsenic compounds that may form. Heat in an oven at 105 °C (221 °F) for 2 hours. Remove the bomb from the oven and allow to cool. Using a Teflon filter, quantitatively filter the digested sample into a 50-ml polypropylene volumetric flask. Rinse the bomb three times with small portions of 0.5 N HNO_3, and filter the rinses into the flask. Add 5 ml of KCl solution to the flask, and dilute to 50 ml with 0.5 N HNO_3.

11.2 Spectrophotometer Preparation.

11.2.1 Turn on the power; set the wavelength, slit width, and lamp current. Adjust the background corrector as instructed by the manufacturer's manual for the particular atomic absorption spectrophotometer. Adjust the burner and flame characteristics as necessary.

11.2.2 Develop a spectrophotometer calibration curve as outlined in Sections 10.2 and 10.3.

11.3 Arsenic Determination. Analyze an appropriately sized aliquot of each diluted sample (from Section 11.1) until two consecutive peak heights agree within 3 percent of their average value. If applicable, follow the procedures outlined in Section 11.3.1. If the sample concentration falls outside the range of the calibration curve, make an appropriate dilution with 0.5 N HNO_3 so that the final concentration falls within the range of the curve. Using the calibration curve, determine the As concentration in each sample.

Note: Because instruments vary between manufacturers, no detailed operating instructions will be given here. Instead, the instrument manufacturer's detailed operating instructions should be followed.

11.3.1 Arsenic Determination at Low Concentration. The lower limit of flame AAS is 10 µg As/ml. If the arsenic concentration of any sample is at a lower level, use the vapor generator or graphite furnace which is available as

an accessory component. Flame, graphite furnace, or vapor generators may be used for samples whose concentrations are between 10 and 30 μg/ml. Follow the manufacturer's instructions in the use of such equipment.

11.3.1.1 Vapor Generator Procedure. Place a sample containing between 0 and 5 μg of arsenic in the reaction tube, and dilute to 15 ml with water. Since there is some trial and error involved in this procedure, it may be necessary to screen the samples by conventional AAS until an approximate concentration is determined. After determining the approximate concentration, adjust the volume of the sample accordingly. Pipet 15 ml of concentrated HCl into each tube. Add 1 ml of 30 percent KI solution. Place the reaction tube into a 50 °C (120 °F) water bath for 5 minutes. Cool to room temperature. Connect the reaction tube to the vapor generator assembly. When the instrument response has returned to baseline, inject 5.0 ml of 5 percent $NaBH_4$ and integrate the resulting spectrophotometer signal over a 30-second time period.

11.3.1.2 Graphite Furnace Procedure. Pipet 5 ml of the digested solution into a 10-ml volumetric flask. Add 1 ml of the 1 percent nickel nitrate solution, 0.5 ml of 50 percent HNO_3, and 1 ml of the 3 percent H_2O_2, and dilute to 10 ml with water. The sample is now ready to inject in the furnace for analysis.

11.4 Run a blank and standard at least after every five samples to check the spectrophotometer calibration. The peak height of the blank must pass through a point no further from the origin than ±2 percent of the recorder full scale. The difference between the measured concentration of the standard (the product of the corrected average peak height and the reciprocal of the least squares slope) and the actual concentration of the standard must be less than 7 percent, or recalibration of the analyzer is required.

11.5 Mandatory Check for Matrix Effects on the Arsenic Results. Same as Method 12, Section 11.5.

11.6 Audit Sample Analysis.

11.6.1 When the method is used to analyze samples to demonstrate compliance with a source emission regulation, a set of EPA audit samples must be analyzed, subject to availability.

11.6.2 Concurrently analyze the audit samples and the compliance samples in the same manner to evaluate the technique of the analyst and the standards preparation.

Note: It is recommended that known quality control samples be analyzed prior to the compliance and audit sample analyses to optimize the system accuracy and precision. These quality control samples may be obtained by contacting the appropriate EPA regional Office or the responsible enforcement authority.

11.6.3 The same analyst, analytical reagents, and analytical system shall be used for the compliance samples and the EPA audit samples. If this condition is met, duplicate auditing of subsequent compliance analyses for the same enforcement agency within a 30-day period is waived. An audit sample set may not be used to validate different sets of compliance samples under the jurisdiction of separate enforcement agencies, unless prior arrangements have been made with both enforcement agencies.

11.7 Audit Sample Results.

11.7.1 Calculate the audit sample concentrations in g/m^3 and submit results using the instructions provided with the audit samples.

11.7.2 Report the results of the audit samples and the compliance determination samples along with their identification numbers, and the analyst's name to the responsible enforcement authority. Include this information with reports of any subsequent compliance analyses for the same enforcement authority during the 30-day period.

11.7.3 The concentrations of the audit samples obtained by the analyst shall agree within 10 percent of the actual concentrations. If the 10 percent specification is not met, reanalyze the compliance and audit samples, and include initial and reanalysis values in the test report.

11.7.4 Failure to meet the 10 percent specification may require retests until the audit problems are resolved. However, if the audit results do not affect the compliance or noncompliance status of the affected facility, the Administrator may waive the reanalysis requirement, further audits, or retests and accept the results of the compliance test. While steps are being taken to resolve audit analysis problems, the Administrator may also choose to use the data to determine the compliance or noncompliance status of the affected facility.

12.0 Data Analysis and Calculations

12.1 Calculate the percent arsenic in the ore sample as follows:

$$\% \text{ As} = \frac{5 C_a F_d}{W} \qquad \text{Eq. 108A-1}$$

Where:

C_a = Concentration of As as read from the standard curve, μg/ml.

F_d = Dilution factor (equals to 1 if the sample has not been diluted).

W = Weight of ore sample analyzed, mg.

5 = (50 ml sample " 100)/(10^3 μg/mg).

13.0 Method Performance

13.1 Sensitivity. The lower limit of flame AAS is 10 μg As/ml. The analytical procedure includes provisions for the use of a graphite furnace or vapor generator for samples with a lower arsenic concentration.

14.0 Pollution Prevention. [Reserved]

15.0 Waste Management. [Reserved]

16.0 References

Same as References 1 through 9 of Section 17.0 of Method 5, with the addition of the following:

1. Perkin Elmer Corporation. Analytical Methods of Atomic Absorption Spectrophotometry. 303–0152. Norwalk, Connecticut. September 1976. pp 5–6.

2. Ringwald, D. Arsenic Determination on Process Materials from ASARCO's Copper Smelter in Tacoma, Washington. Unpublished Report. Prepared for Emission Measurement Branch, Emission Standards and Engineering Division, U.S. Environmental Protection Agency, Research Triangle Park, North Carolina. August 1980. 35 pp.

3. Stack Sampling Safety Manual (Draft). U.S. Environmental Protection Agency, Office of Air Quality Planning and Standard, Research Triangle Park, NC. September 1978.

17.0 Tables, Diagrams, Flowcharts, and Validation Data. [Reserved]

Method 108B—Determination of Arsenic Content in Ore Samples From Nonferrous Smelters

Note: This method does not include all of the specifications (*e.g.,* equipment and supplies) and procedures (*e.g.,* sampling and analytical) essential to its performance. Some material is incorporated by reference from other methods in this appendix and in Appendix A to 40 CFR Part 60. Therefore, to

obtain reliable results, persons using this method should have a thorough knowledge of at least the following additional test methods: Method 12 and Method 108A.

1.0 Scope and Application

1.1 Analytes.

Analyte	CAS No.	Sensitivity
Arsenic compounds as arsenic (As).	7440–38–2	Lower limit 10 µg/ml.

1.2 Applicability. This method applies to the determination of inorganic As content of process ore and reverberatory matte samples from nonferrous smelters and other sources as specified in an applicable subpart of the regulations. Samples resulting in an analytical concentration greater than 10 µg As/ml may be analyzed by this method. For lower level arsenic samples, Method 108C should be used.

1.3 Data Quality Objectives. Adherence to the requirements of this method will enhance the quality of the data obtained from air pollutant sampling methods.

2.0 Summary of Method

Arsenic bound in ore samples is liberated by acid digestion and analyzed by flame atomic absorption spectrophotometry (AAS).

3.0 Definitions [Reserved]

4.0 Interferences

Analysis for As by flame AAS is sensitive to the chemical composition and to the physical properties (*e.g.,* viscosity, pH) of the sample. The analytical procedure includes a check for matrix effects (Section 11.4).

5.0 Safety

5.1 Disclaimer. This method may involve hazardous materials, operations, and equipment. This test method may not address all of the safety problems associated with its use. It is the responsibility of the user to establish appropriate safety and health practices and determine the applicability of regulatory limitations prior to performing this test method.

5.2 Corrosive Reagents. The following reagents are hazardous. Personal protective equipment and safe procedures that prevent chemical splashes are recommended. If contact occurs, immediately flush with copious amounts of water for at least 15 minutes. Remove clothing under shower and decontaminate. Treat residual chemical burns as thermal burns.

5.2.1 Hydrochloric acid (HCl). Highly corrosive liquid with toxic vapors. Vapors are highly irritating to eyes, skin, nose, and lungs, causing severe damage. May cause bronchitis, pneumonia, or edema of lungs. Exposure to concentrations of 0.13 to 0.2 percent can be lethal to humans in a few minutes. Provide ventilation to limit exposure. Reacts with metals, producing hydrogen gas.

5.2.2 Hydrofluoric Acid (HF). Highly corrosive to eyes, skin, nose, throat, and lungs. Reaction to exposure may be delayed by 24 hours or more. Provide ventilation to limit exposure.

5.2.3 Nitric Acid (HNO_3). Highly corrosive to eyes, skin, nose, and lungs. Vapors are highly toxic and can cause bronchitis, pneumonia, or edema of lungs. Reaction to inhalation may be delayed as long as 30 hours and still be fatal. Provide ventilation to limit exposure. Strong oxidizer. Hazardous reaction may occur with organic materials such as solvents.

5.2.4 Perchloric Acid ($HClO_4$). Corrosive to eyes, skin, nose, and throat. Provide ventilation to limit exposure. Very strong oxidizer. Keep separate from water and oxidizable materials to prevent vigorous evolution of heat, spontaneous combustion, or explosion. Heat solutions containing $HClO_4$ only in hoods specifically designed for $HClO_4$.

6.0 Equipment and Supplies

6.1 Sample Preparation. The following items are required for sample preparation:

6.1.1 Teflon Beakers. 150-ml.

6.1.2 Graduated Pipets. 5-ml disposable.

6.1.3 Graduated Cylinder. 50-ml.

6.1.4 Volumetric Flask. 100-ml.

6.1.5 Analytical Balance. To measure within 0.1 mg.

6.1.6 Hot Plate.

6.1.7 Perchloric Acid Fume Hood.

6.2 Analysis. The following items are required for analysis:

6.2.1 Spectrophotometer. Equipped with an electrodeless discharge lamp and a background corrector to measure absorbance at 193.7 nm.

6.2.2 Beaker and Watch Glass. 400-ml.

6.2.3 Volumetric Flask. 1-liter.

6.2.4 Volumetric Pipets. 1-, 5-, 10-, and 25-ml.

7.0 Reagents and Standards

Unless otherwise indicated, it is intended that all reagents conform to the specifications established by the Committee on Analytical Reagents of the American Chemical Society, where such specifications are available; otherwise, use the best available grade.

7.1 Sample Preparation. The following reagents are required for sample preparation:

7.1.1 Water. Deionized distilled to meet ASTM D 1193–77 or 91 Type 3 (incorporated by reference—see § 61.18).

7.1.2 Nitric Acid, Concentrated.

7.1.3 Hydrofluoric Acid, Concentrated.

7.1.4 Perchloric Acid, 70 Percent.

7.1.5 Hydrochloric Acid, Concentrated.

7.2 Analysis. The following reagents and standards are required for analysis:

7.2.1 Water. Same as in Section 7.1.1.

7.2.2 Stock Arsenic Standard, 1.0 mg As/ml. Dissolve 1.3203 g of primary grade As_20_3 [dried at 105 °C (221 °F)] in a 400-ml beaker with 10 ml of HNO_3 and 5 ml of HCl. Cover with a watch glass, and heat gently until dissolution is complete. Add 10 ml of HNO_3 and 25 ml of $HClO_4$, evaporate to strong fumes of $HClO_4$, and reduce to about 20 ml volume. Cool, add 100 ml of water and 100 ml of HCl, and transfer quantitatively to a 1-liter volumetric flask. Dilute to volume with water and mix.

7.2.3 Acetylene. Suitable quality for AAS analysis.

7.2.4 Air. Suitable quality for AAS analysis.

7.2.5 Quality Assurance Audit Samples. Same as in Method 108A, Section 7.2.11.

8.0 Sample Collection, Preservation, Transport, and Storage

Same as in Method 108A, Sections 8.1 and 8.2.

9.0 Quality Control

Section	Quality control measure	Effect
10.2	Spectrophotometer calibration	Ensure linearity of spectrophotometer response to standards.

Section	Quality control measure	Effect
11.4	Check for matrix effects	Eliminate matrix effects.
11.5	Audit sample analysis	Evaluate analyst's technique and standards preparation.

10.0 Calibration and Standardization

Note: Maintain a laboratory log of all calibrations.

10.1 Preparation of Standard Solutions. Pipet 1, 5, 10, and 25 ml of the stock As solution into separate 100-ml volumetric flasks. Add 2 ml of $HClO_4$, 10 ml of HCl, and dilute to the mark with water. This will provide standard concentrations of 10, 50, 100, and 250 µg As/ml.

10.2 Calibration Curve and Spectrophotometer Calibration Quality Control. Same as Method 108A, Sections 10.2 and 10.3

11.0 Analytical Procedure

11.1 Sample Preparation. Weigh 100 to 1000 mg of finely pulverized sample to the nearest 0.1 mg. Transfer the sample to a 150-ml Teflon beaker. Dissolve the sample by adding 15 ml of HNO_3, 10 ml of HCl, 10 ml of HF, and 10 ml of $HClO_4$ in the exact order as described, and let stand for 10 minutes. In a $HClO_4$ fume hood, heat on a hot plate until 2–3 ml of $HClO_4$ remain, then cool. Add 20 ml of water and 10 ml of HCl. Cover and warm until the soluble salts are in solution. Cool, and transfer quantitatively to a 100-ml volumetric flask. Dilute to the mark with water.

11.2 Spectrophotometer Preparation. Same as in Method 108A, Section 11.2.

11.3 Arsenic Determination. If the sample concentration falls outside the range of the calibration curve, make an appropriate dilution with 2 percent $HClO_4$/10 percent HCl (prepared by diluting 2 ml concentrated $HClO_4$ and 10 ml concentrated HCl to 100 ml with water) so that the final concentration falls within the range of the curve. Using the calibration curve, determine the As concentration in each sample.

Note: Because instruments vary between manufacturers, no detailed operating instructions will be given here. Instead, the instrument manufacturer's detailed operating instructions should be followed.

Run a blank and standard at least after every five samples to check the spectrophotometer calibration. The peak height of the blank must pass through a point no further from the origin than ±2 percent of the recorder full scale. The difference between the measured concentration of the standard (the product of the corrected average peak height and the reciprocal of the least squares slope) and the actual concentration of the standard must be less than 7 percent, or recalibration of the analyzer is required.

11.4 Mandatory Check for Matrix Effects on the Arsenic Results. Same as Method 12, Section 11.5.

11.5 Audit Sample Analysis. Same as in Method 108A, Section 11.6.

12.0 Data Analysis and Calculations

Same as in Method 108A, Section 12.0.

13.0 Method Performance

13.1 Sensitivity. The lower limit of flame AAS is 10 µg As/ml.

14.0 Pollution Prevention [Reserved]

15.0 Waste Management [Reserved]

16.0 References

Same as in Method 108A, Section 16.0.

17.0 Tables, Diagrams, Flowcharts, and Validation Data [Reserved]

Method 108C—Determination of Arsenic Content in Ore Samples From Nonferrous Smelters (Molybdenum Blue Photometric Procedure)

Note: This method does not include all of the specifications (*e.g.,* equipment and supplies) and procedures (*e.g.,* sampling and analytical) essential to its performance. Some material is incorporated by reference from other methods in this part. Therefore, to obtain reliable results, persons using this method should have a thorough knowledge of at least Method 108A.

1.0 Scope and Application

1.1 Analytes.

Analyte	CAS No.	Sensitivity
Arsenic compounds as arsenic (As).	7440–38–2	Lower limit 0.0002 percent As by weight.

1.2 Applicability. This method applies to the determination of inorganic As content of process ore and reverberatory matte samples from nonferrous smelters and other sources as specified in an applicable subpart of the regulations.

1.3 Data Quality Objectives. Adherence to the requirements of this method will enhance the quality of the data obtained from air pollutant sampling methods.

2.0 Summary of Method

Arsenic bound in ore samples is liberated by acid digestion and analyzed by the molybdenum blue photometric procedure.

3.0 Definitions. [Reserved]

4.0 Interferences. [Reserved]

5.0 Safety

5.1 Disclaimer. This method may involve hazardous materials, operations, and equipment. This test method may not address all of the safety problems associated with its use. It is the responsibility of the user to establish appropriate safety and health practices and determine the applicability of regulatory limitations prior to performing this test method.

5.2 Corrosive Reagents. The following reagents are hazardous. Personal protective equipment and safe procedures that prevent chemical splashes are recommended. If contact occurs, immediately flush with copious amounts of water for at least 15 minutes. Remove clothing under shower and decontaminate. Treat residual chemical burns as thermal burns.

5.2.1 Hydrochloric Acid (HCl). Highly corrosive liquid with toxic vapors. Vapors are highly irritating to eyes, skin, nose, and lungs, causing severe damage. May cause bronchitis, pneumonia, or edema of lungs. Exposure to concentrations of 0.13 to 0.2 percent can be lethal to humans in a few minutes. Provide ventilation to limit exposure. Reacts with metals, producing hydrogen gas.

5.2.2 Hydrofluoric Acid (HF). Highly corrosive to eyes, skin, nose, throat, and lungs. Reaction to exposure may be delayed by 24 hours or more. Provide ventilation to limit exposure.

5.2.3 Nitric Acid (HNO_4). Highly corrosive to eyes, skin, nose, and lungs. Vapors are highly toxic and can cause bronchitis, pneumonia, or edema of lungs. Reaction to inhalation may be delayed as long as 30 hours and still be fatal. Provide ventilation to limit exposure. Strong oxidizer. Hazardous reaction may occur with organic materials such as solvents.

5.2.4 Perchloric Acid ($HClO_4$). Corrosive to eyes, skin, nose, and throat. Provide ventilation to limit exposure. Very strong oxidizer. Keep separate from water and oxidizable materials to prevent vigorous evolution of heat, spontaneous combustion, or explosion. Heat solutions containing $HClO_4$ only in hoods specifically designed for $HClO_4$.

5.2.5 Sulfuric acid (H_2SO_4). Rapidly destructive to body tissue. Will cause third degree burns. Eye damage may result in blindness. Inhalation may be fatal from spasm of the larynx, usually within 30 minutes. May cause lung tissue damage with edema. 3 mg/m^3 will cause lung damage in uninitiated. 1 mg/m^3 for 8 hours will cause lung damage or, in higher concentrations, death. Provide ventilation to limit inhalation. Reacts violently with metals and organics.

6.0 Equipment and Supplies

6.1 Sample Preparation. The following items are required for sample preparation:

6.1.1 Analytical Balance. To measure to within 0.1 mg.

6.1.2 Erlenmeyer Flask. 300-ml.

6.1.3 Hot Plate.

6.1.4 Distillation Apparatus. No. 6, in ASTM E 50–82, 86, or 90 (Reapproved 1995)(incorporated by reference—see § 61.18); detailed in Figure 108C–1.

6.1.5 Graduated Cylinder. 50-ml.

6.1.6 Perchloric Acid Fume Hood.

6.2 Analysis. The following items are required for analysis:

6.2.1 Spectrophotometer. Capable of measuring at 660 nm.

6.2.2 Volumetric Flasks. 50- and 100-ml.

7.0 Reagents and Standards

Unless otherwise indicated, it is intended that all reagents conform to the specifications established by the Committee on Analytical Reagents of the American Chemical Society, where such specifications are available; otherwise, use the best available grade.

7.1 Sample Preparation. The following reagents are required for sample preparation:

7.1.1 Water. Deionized distilled to meet ASTM D 1193–77 or 91 Type 3 (incorporated by reference—see § 61.18). When high concentrations of organic matter are not expected to be present, the $KMnO_4$ test for oxidizable organic matter may be omitted. Use in all dilutions requiring water.

7.1.2 Nitric Acid, Concentrated.

7.1.3 Hydrofluoric Acid, Concentrated.

7.1.4 Sulfuric Acid, Concentrated.

7.1.5 Perchloric Acid, 70 Percent.

7.1.6 Hydrochloric Acid, Concentrated.

7.1.7 Dilute Hydrochloric Acid. Add one part concentrated HCl to nine parts water.

7.1.8 Hydrazine Sulfate ($(NH_2)_2{\cdot}H_2SO_4$).

7.1.9 Potassium Bromide (KBr).

7.1.10 Bromine Water, Saturated.

7.2 Analysis. The following reagents and standards are required for analysis:

7.2.1 Water. Same as in Section 7.1.1.

7.2.2 Methyl Orange Solution, 1 g/liter.

7.2.3 Ammonium Molybdate Solution, 5 g/liter. Dissolve 0.5 g $(NH_4)Mo_7O_{24}{\cdot}4H_2O$ in water in a 100-ml volumetric flask, and dilute to the mark. This solution must be freshly prepared.

7.2.4 Standard Arsenic Solution, 10 µg As/ml. Dissolve 0.13203 g of As_2O_3 in 100 ml HCl in a 1-liter volumetric flask. Add 200 ml of water, cool, dilute to the mark with water, and mix. Transfer 100 ml of this solution to a 1-liter volumetric flask, add 40 ml HCl, cool, dilute to the mark, and mix.

7.2.5 Hydrazine Sulfate Solution, 1 g/liter. Dissolve 0.1 g of $[(NH_2)_2{\cdot}H_2SO_4]$ in water, and dilute to 100 ml in a volumetric flask. This solution must be freshly prepared.

7.2.6 Potassium Bromate ($KBrO_3$) Solution, 0.03 Percent Weight by Volume (W/V). Dissolve 0.3 g $KBrO_3$ in water, and dilute to 1 liter with water.

7.2.7 Ammonium Hydroxide (NH_4OH), Concentrated.

7.2.8 Boiling Granules.

7.2.9 Hydrochloric Acid, 50 percent by volume. Dilute equal parts concentrated HCl with water.

7.2.10 Quality Assurance Audit Samples. Same as in Method 108A, Section 7.2.11.

8.0 Sample Collection, Preservation, Transport, and Storage

Same as in Method 108A, Sections 8.1 and 8.2.

9.0 Quality Control

Section	Quality control measure	Effect
10.2	Calibration curve preparation	Ensure linearity of spectrophotometric analysis of standards.
11.3	Audit sample analysis	Evaluate analyst's technique and standards preparation.

10.0 Calibration and Standardizations

Note: Maintain a laboratory log of all calibrations.

10.1 Preparation of Standard Solutions. Transfer 1.0, 2.0, 4.0, 8.0, 12.0, 16.0, and 20.0 ml of standard arsenic solution (10 µg/ml) to each of seven 50-ml volumetric flasks. Dilute to 20 ml with dilute HCl. Add one drop of methyl orange solution and neutralize to the yellow color with dropwise addition of NH_4OH. Just bring back to the red color by dropwise addition of dilute HCl, and add 10 ml in excess. Proceed with the color development as described in Section 11.2.

10.2 Calibration Curve. Plot the spectrophotometric readings of the calibration solutions against µg As per 50 ml of solution. Use this curve to determine the As concentration of each sample.

10.3 Spectrophotometer Calibration Quality Control. Calculate the least squares slope of the calibration curve. The line must pass through the origin or through a point no further from the origin than ±2 percent of the recorder full scale. Multiply the corrected peak height by the reciprocal of the least squares slope to determine the distance each calibration point lies from the theoretical calibration line. The difference between the calculated concentration values and the actual concentrations must be less than 7 percent for all standards.

11.0 Analytical Procedure

11.1 Sample Preparation.

11.1.1 Weigh 1.0 g of finely pulverized sample to the nearest 0.1 mg. Transfer the sample to a 300 ml Erlenmeyer flask and add 15 ml of HNO_3, 4 ml HCl, 2 ml HF, 3 ml $HClO_4$, and 15 ml H_2SO_4, in the order listed. In a $HClO_4$ fume hood, heat on a hot plate to decompose the sample. Then heat while swirling over an open flame until dense white fumes evolve. Cool, add 15

ml of water, swirl to hydrate the H_2SO_4 completely, and add several boiling granules. Cool to room temperature.

11.1.2 Add 1 g of KBr, 1 g hydrazine sulfate, and 50 ml HCl. Immediately attach the distillation head with thermometer and dip the side arm into a 50-ml graduated cylinder containing 25 ml of water and 2 ml of bromine water. Keep the graduated cylinder immersed in a beaker of cold water during distillation. Distill until the temperature of the vapor in the flask reaches 107 °C (225 °F). When distillation is complete, remove the flask from the hot plate, and simultaneously wash down the side arm with water as it is removed from the cylinder.

11.1.3 If the expected arsenic content is in the range of 0.0020 to 0.10 percent, dilute the distillate to the 50-ml mark of the cylinder with water, stopper, and mix. Transfer a 5.0-ml aliquot to a 50-ml volumetric flask. Add 10 ml of water and a boiling granule. Place the flask on a hot plate, and heat gently until the bromine is expelled and the color of methyl orange indicator persists upon the addition of 1 to 2 drops. Cool the flask to room temperature. Neutralize just to the yellow color of the indicator with dropwise additions of NH_4OH. Bring back to the red color by dropwise addition of dilute HCl, and add 10 ml excess. Proceed with the molybdenum blue color development as described in Section 11.2.

11.1.4 If the expected arsenic content is in the range of 0.0002 to 0.0010 percent As, transfer either the entire initial distillate or the measured remaining distillate from Section 11.1.2 to a 250-ml beaker. Wash the cylinder with two successive portions of concentrated HNO_3, adding each portion to the distillate in the beaker. Add 4 ml of concentrated $HClO_4$, a boiling granule, and cover with a flat watch glass placed slightly to one side. Boil gently on a hot plate until the volume is reduced to approximately 10 ml. Add 3 ml of HNO_3, and continue the evaporation until $HClO_4$ is refluxing on the beaker cover. Cool briefly, rinse the underside of the watch glass and the inside of the beaker with about 3–5 ml of water, cover, and continue the evaporation to expel all but 2 ml of the $HClO_4$.

Note: If the solution appears cloudy due to a small amount of antimony distilling over, add 4 ml of 50 percent HCl and 5 ml of water, cover, and warm gently until clear. If cloudiness persists, add 5 ml of HNO_3 and 2 ml H_2SO_4. Continue the evaporation of volatile acids to solubilize the antimony until dense white fumes of H_2SO_4 appear. Retain at least 1 ml of the H_2SO_4.

11.1.5 To the 2 ml of $HClO_4$ solution or 1 ml of H_2SO_4 solution, add 15 ml of water, boil gently for 2 minutes, and then cool. Proceed with the molybdenum blue color development by neutralizing the solution directly in the beaker just to the yellow indicator color by dropwise addition of NH_4OH. Obtain the red color by dropwise addition of dilute HCl. Transfer the solution to a 50-ml volumetric flask. Rinse the beaker successively with 10 ml of dilute HCl, followed by several small portions of water. At this point the volume of solution in the flask should be no more than 40 ml. Continue with the color development as described in Section 11.2.

11.2 Analysis.

11.2.1 Add 1 ml of $KBrO_3$ solution to the flask and heat on a low-temperature hot plate to about 50 °C (122 °F) to oxidize the arsenic and methyl orange. Add 5.0 ml of ammonium molybdate solution to the warm solution and mix. Add 2.0 ml of hydrazine sulfate solution, dilute until the solution comes within the neck of the flask, and mix. Place the flask in a 400 ml beaker, 80 percent full of boiling water, for 10 minutes. Enough heat must be supplied to prevent the water bath from cooling much below the boiling point upon inserting the volumetric flask. Remove the flask, cool to room temperature, dilute to the mark, and mix.

11.2.2 Transfer a suitable portion of the reference solution to an absorption cell, and adjust the spectrophotometer to the initial setting using a light band centered at 660 nm. While maintaining this spectrophotometer adjustment, take the readings of the calibration solutions followed by the samples.

11.3 Audit Sample Analysis. Same as in Method 108A, Section 11.6.

12.0 Data Analysis and Calculations

Same as in Method 108A, Section 12.0.

13.0 Method Performance. [Reserved]

14.0 Pollution Prevention. [Reserved]

15.0 Waste Management. [Reserved]

16.0 References

1. Ringwald, D. Arsenic Determination on Process Materials from ASARCO's Copper Smelter in Tacoma, Washington. Unpublished Report. Prepared for the Emission Measurement Branch, Technical Support Division, U.S. Environmental Protection Agency, Research Triangle Park, North Carolina. August 1980. 35 pp.

BILLING CODE 6560–50–P

17.0 Tables, Diagrams, Flowcharts, and Validation Data

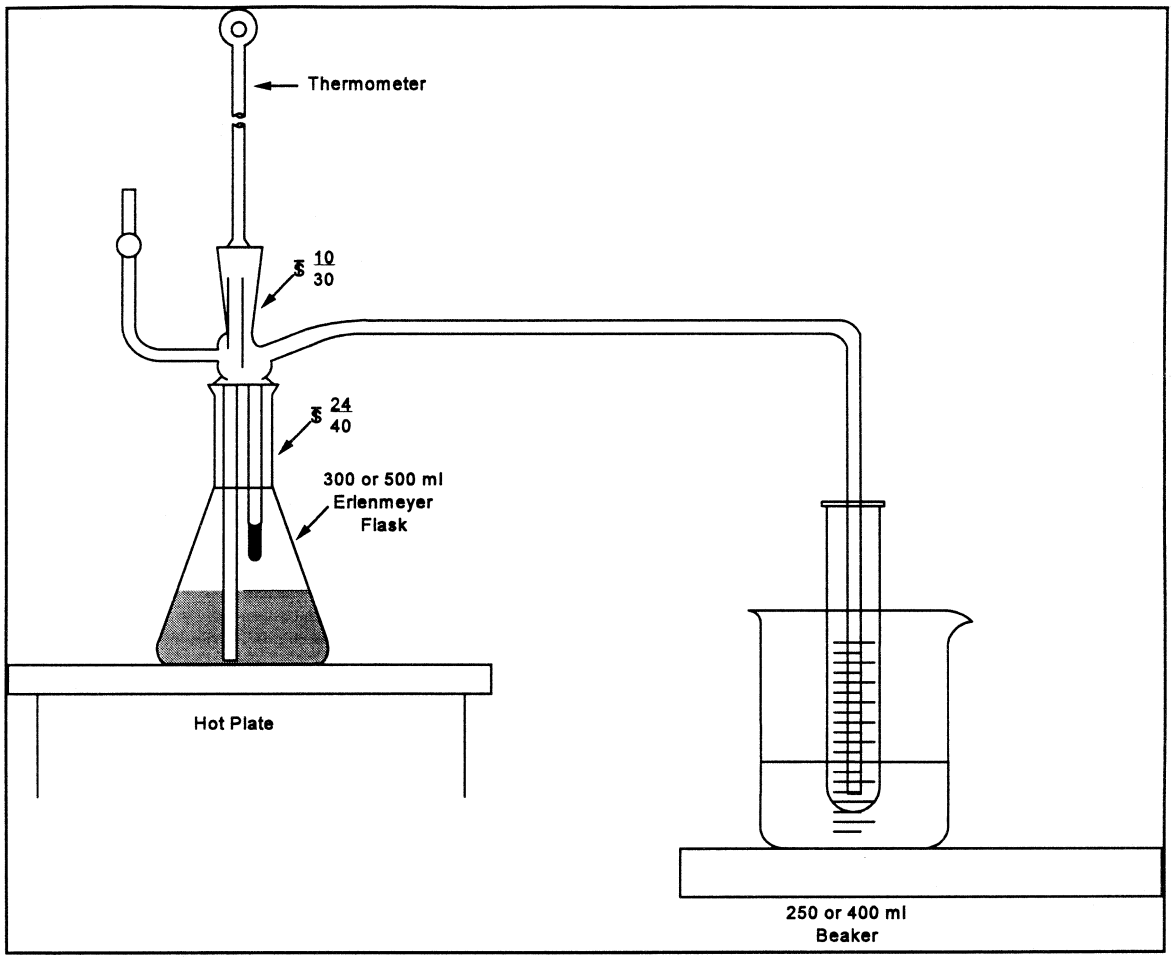

Figure 108C-1. Distillation Apparatus.

BILLING CODE 6560–50–C

Method 111—Determination of Polonium–210 Emissions From Stationary Sources

NOTE: This method does not include all of the specifications (*e.g.*, equipment and supplies) and procedures (*e.g.*, sampling and analytical) essential to its performance. Some material is incorporated by reference from methods in appendix A to 40 CFR Part 60. Therefore, to obtain reliable results, persons using this method should have a thorough knowledge of at least the following additional test methods: Method 1, Method 2, Method 3, and Method 5.

1.0 Scope and Application

1.1 Analytes.

Analyte	CAS No.	Sensitivity
Polonium	7440–08–6	Not specified.

1.2 Applicability. This method is applicable for the determination of the polonium-210 content of particulate matter samples collected from stationary source exhaust stacks, and for the use of these data to calculate polonium-210 emissions from individual sources and from all affected sources at a facility.

1.3 Data Quality Objectives. Adherence to the requirements of this method will enhance the quality of the data obtained from air pollutant sampling methods.

2.0 Summary of Method

A particulate matter sample, collected according to Method 5, is analyzed for polonium-210 content: the polonium-210 in the sample is put in solution, deposited on a metal disc, and the radioactive disintegration rate measured. Polonium in acid solution spontaneously deposits on surfaces of metals that are more electropositive than polonium. This principle is routinely used in the radiochemical analysis of polonium-210. Data reduction procedures are provided, allowing the calculation of polonium-210 emissions from individual sources

and from all affected sources at a facility, using data obtained from Methods 2 and 5 and from the analytical procedures herein.

3.0 Definitions [Reserved]

4.0 Interferences [Reserved]

5.0 Safety

5.1 Disclaimer. This method may involve hazardous materials, operations, and equipment. This test method may not address all of the safety problems associated with its use. It is the responsibility of the user of this test method to establish appropriate safety and health practices and determine the applicability of regulatory limitations prior to performing this test method.

5.2 Corrosive Reagents. The following reagents are hazardous. Personal protective equipment and safe procedures are useful in preventing chemical splashes. If contact occurs, immediately flush with copious amounts of water at least 15 minutes. Remove clothing under shower and decontaminate. Treat residual chemical burns as thermal burns.

5.2.1 Hydrochloric Acid (HCl). Highly corrosive liquid with toxic vapors. Vapors are highly irritating to eyes, skin, nose, and lungs, causing severe damage. May cause bronchitis, pneumonia, or edema of lungs. Exposure to concentrations of 0.13 to 0.2 percent can be lethal to humans in a few minutes. Provide ventilation to limit exposure. Reacts with metals, producing hydrogen gas.

5.2.2 Hydrofluoric Acid (HF). Highly corrosive to eyes, skin, nose, throat, and lungs. Reaction to exposure may be delayed by 24 hours or more. Provide ventilation to limit exposure.

5.2.3 Nitric Acid (HNO_3). Highly corrosive to eyes, skin, nose, and lungs. Vapors cause bronchitis, pneumonia, or edema of lungs. Reaction to inhalation may be delayed as long as 30 hours and still be fatal. Provide ventilation to limit exposure. Strong oxidizer. Hazardous reaction may occur with organic materials such as solvents.

5.2.4 Perchloric Acid ($HClO_4$). Corrosive to eyes, skin, nose, and throat. Provide ventilation to limit exposure. Keep separate from water and oxidizable materials to prevent vigorous evolution of heat, spontaneous combustion, or explosion. Heat solutions containing $HClO_4$ only in hoods specifically designed for $HClO_4$.

6.0 Equipment and Supplies

6.1 Alpha Spectrometry System. Consisting of a multichannel analyzer, biasing electronics, silicon surface barrier detector, vacuum pump and chamber.

6.2 Constant Temperature Bath at 85 °C (185 °F).

6.3 Polished Silver Discs. 3.8 cm diameter, 0.4 mm thick with a small hole near the edge.

6.4 Glass Beakers. 400 ml, 150 ml.

6.5 Hot Plate, Electric.

6.6 Fume Hood.

6.7 Teflon Beakers, 150 ml.

6.8 Magnetic Stirrer.

6.9 Stirring Bar.

6.10 Hooks. Plastic or glass, to suspend plating discs.

6.11 Internal Proportional Counter. For measuring alpha particles.

6.12 Nucleopore Filter Membranes. 25 mm diameter, 0.2 micrometer pore size or equivalent.

6.13 Planchets. Stainless steel, 32 mm diameter with 1.5 mm lip.

6.14 Transparent Plastic Tape. 2.5 cm wide with adhesive on both sides.

6.15 Epoxy Spray Enamel.

6.16 Suction Filter Apparatus. For 25 mm diameter filter.

6.17 Wash Bottles, 250 ml capacity.

6.18 Graduated Cylinder, plastic, 25 ml capacity.

6.19 Volumetric Flasks, 100 ml, 250 ml.

7.0 Reagents and Standards

Unless otherwise indicated, it is intended that all reagents conform to the specifications established by the Committee on Analytical Reagents of the American Chemical Society, where such specifications are available; otherwise, use the best available grade.

7.1 Ascorbic Acid.

7.2 Ammonium Hydroxide (NH_4OH), 15 M.

7.3 Water. Deionized distilled, to conform to ASTM D 1193–77 or 91 (incorporated by reference—see § 61.18), Type 3. Use in all dilutions requiring water.

7.4 Ethanol (C_2H_5OH), 95 percent.

7.5 Hydrochloric Acid, 12 M.

7.6 Hydrochloric Acid, 1 M. Dilute 83 ml of the 12 M HCl to 1 liter with distilled water.

7.7 Hydrofluoric Acid, 29 M.

7.8 Hydrofluoric Acid, 3 M. Dilute 52 ml of the 29 M HF to 500 ml with distilled water. Use a plastic graduated cylinder and storage bottle.

7.9 Lanthanum Carrier, 0.1 mg La^{+3}/ml. Dissolve 0.078 gram lanthanum nitrate, $La(NO_3)_3 \cdot 6H_2O$ in 250 ml of 1 M HCl.

7.10 Nitric Acid, 16 M.

7.11 Perchloric Acid, 12 M.

7.12 Polonium-209 Solution.

7.13 Silver Cleaner. Any mild abrasive commercial silver cleaner.

7.14 Degreaser.

7.15 Standard Solution. Standardized solution of an alpha-emitting actinide element, such as plutonium-239 or americium-241.

8.0 Sample Collection, Preservation, Transport, and Storage. [Reserved]

9.0 Quality Control

9.1 General Requirement.

9.1.1 All analysts using this method are required to demonstrate their ability to use the method and to define their respective accuracy and precision criteria.

9.2 Miscellaneous Quality Control Measures.

Section	Quality control measure	Effect
10.1	Standardization of alpha spectrometry system	Ensure precision of sample analyses.
10.3	Standardization of internal proportional counter.	Ensure precise sizing of sample aliquot.
11.1, 11.2	Determination of procedure background and instrument background.	Minimize background effects.
11.3	Audit sample analysis	Evaluate analyst's technique.

10.0 Calibration and Standardization

10.1 Standardization of Alpha Spectrometry System.

10.1.1 Add a quantity of the actinide standard solution to a 100 ml volumetric flask so that the final concentration when diluted to a volume of 100 ml will be approximately 1 pCi/ml.

10.1.2 Add 10 ml of 16 M HNO_3 and dilute to 100 ml with water.

10.1.3 Add 20 ml of 1 M HCl to each of six 150 ml beakers. Add 1.0 ml of lanthanum carrier, 0.1 mg lanthanum per ml, to the acid solution in each beaker.

10.1.4 Add 1.0 ml of the 1 pCi/ml working solution (from Section 10.1.1)

to each beaker. Add 5.0 ml of 3 M HF to each beaker.

10.1.5 Cover beakers and allow solutions to stand for a minimum of 30 minutes. Filter the contents of each beaker through a separate filter membrane using the suction filter apparatus. After each filtration, wash the filter membrane with 10 ml of distilled water and 5 ml of ethanol, and allow the filter membrane to air dry on the filter apparatus.

10.1.6 Carefully remove the filter membrane and mount it, filtration side up, with double-side tape on the inner surface of a planchet. Place planchet in an alpha spectrometry system and count each planchet for 1000 minutes.

10.1.7 Calculate the counting efficiency of the detector for each aliquot of the 1 pCi/ml actinide working solution using Eq. 111–1 in Section 12.2.

10.1.8 Determine the average counting efficiency of the detector, E_c, by calculating the average of the six determinations.

10.2 Preparation of Standardized Solution of Polonium-209.

10.2.1 Add a quantity of the Po-209 solution to a 100 ml volumetric flask so that the final concentration when diluted to a 100 ml volume will be approximately 1 pCi/ml.

10.2.2 Follow the procedures outlined in Sections 10.1.2 through 10.1.6, except substitute 1.0 ml of polonium-209 tracer solution (Section 10.2.1) and 3.0 ml of 15 M ammonium hydroxide for the 1 pCi/ml actinide working solution and the 3 M HF, respectively.

10.2.3 Calculate the activity of each aliquot of the polonium-209 tracer solution using Eq. 111–2 in Section 12.3.

10.2.4 Determine the average activity of the polonium-209 tracer solution, F, by averaging the results of the six determinations.

10.3 Standardization of Internal Proportional Counter

10.3.1 Add a quantity of the actinide standard solution to a 100 ml volumetric flask so that the final concentration when diluted to a 100 ml volume will be approximately 100 pCi/ml.

10.3.2 Follow the procedures outlined in Sections 10.1.2 through 10.1.6, except substitute the 100 pCi/ml actinide working solution for the 1 pCi/ml solution, place the planchet in an internal proportional counter (instead of an alpha spectrometry system), and count for 100 minutes (instead of 1000 minutes).

10.3.3 Calculate the counting efficiency of the internal proportional counter for each aliquot of the 100 pCi/ml actinide working solution using Eq. 111–3 in 12.4.

10.3.4 Determine the average counting efficiency of the internal proportional counter, E_I, by averaging the results of the six determinations.

11.0 Analytical Procedure

Note: Perform duplicate analyses of all samples, including background counts, quality assurance audit samples, and Method 5 samples. Duplicate measurements are considered acceptable when the difference between them is less than two standard deviations as described in EPA 600/4–77–001 or subsequent revisions.

11.1 Determination of Procedure Background. Background counts used in all equations are determined by performing the specific analysis required using the analytical reagents only. All procedure background counts and sample counts for the internal proportional counter should utilize a counting time of 100 minutes; for the alpha spectrometry system, 1000 minutes. These background counts should be performed no less frequently than once per 10 sample analyses.

11.2 Determination of Instrument Background. Instrument backgrounds of the internal proportional counter and the alpha spectrometry system should be determined on a weekly basis. Instrument background should not exceed procedure background. If this occurs, it may be due to a malfunction or contamination, and should be corrected before use.

11.3 Quality Assurance Audit Samples. An externally prepared performance evaluation sample shall be analyzed no less frequently than once per 10 sample analyses, and the results reported with the test results.

11.4 Sample Preparation. Treat the Method 5 samples [*i.e.,* the glass fiber filter (Container No. 1) and the acetone rinse (Container No. 2)] as follows:

11.4.1 Container No. 1. Transfer the filter and any loose particulate matter from the sample container to a 150-ml Teflon beaker.

11.4.2 Container No. 2. Note the level of liquid in the container, and confirm on the analysis sheet whether leakage occurred during transport. If a noticeable amount of leakage has occurred, either void the sample or use methods, subject to the approval of the Administrator, to correct the final results. Transfer the contents to a 400-ml glass beaker. Add polonium-209 tracer solution to the glass beaker in an amount approximately equal to the amount of polonium-210 expected in the total particulate sample. Record the activity of the tracer solution added. Add 16 M nitric acid to the beaker to digest and loosen the residue.

11.4.3 Transfer the contents of the glass beaker to the Teflon beaker containing the glass fiber filter. Rinse the glass beaker with 16 M HNO_3. If necessary, reduce the volume in the beaker by evaporation until all of the nitric acid HNO_3 from the glass beaker has been transferred to the Teflon beaker.

11.4.4 Add 30 ml of 29 M HF to the Teflon beaker and evaporate to near dryness on a hot plate in a properly operating hood.

Note: Do not allow the residue to go to dryness and overheat; this will result in loss of polonium.

11.4.5 Repeat step 11.4.4 until the filter is dissolved.

11.4.6 Add 100 ml of 16 M HNO_3 to the residue in the Teflon beaker and evaporate to near dryness.

Note: Do not allow the residue to go to dryness.

11.4.7 Add 50 ml of 16 M HNO_3 and 10 ml of 12 M perchloric acid to the Teflon beaker and heat until dense fumes of perchloric acid are evolved.

11.4.8 Repeat steps 11.4.4 to 11.4.7 as necessary until sample is completely dissolved.

11.4.9 Add 10 ml of 12 M HCl to the Teflon beaker and evaporate to dryness. Repeat additions and evaporations several times.

11.4.10 Transfer the sample to a 250-ml volumetric flask and dilute to volume with 3 M HCl.

11.5 Sample Screening. To avoid contamination of the alpha spectrometry system, check each sample as follows:

11.5.1 Add 20 ml of 1 M HCl, 1 ml of the lanthanum carrier solution (0.1 mg La/ml), a 1 ml aliquot of the sample solution from Section 11.4.10, and 3 ml of 15 M ammonium hydroxide to a 250-ml beaker in the order listed. Allow this solution to stand for a minimum of 30 minutes.

11.5.2 Filter the solution through a filter membrane using the suction filter apparatus. Wash the filter membrane with 10 ml of water and 5 ml of ethanol, and allow the filter membrane to air dry on the filter apparatus.

11.5.3 Carefully remove the filter membrane and mount it, filtration side up, with double-side tape on the inner surface of a planchet. Place the planchet in an internal proportional counter, and count for 100 minutes.

11.5.4 Calculate the activity of the sample using Eq. 111–4 in Section 12.5.

11.5.5 Determine the aliquot volume of the sample solution from Section 11.4.10 to be analyzed for polonium-210, such that the aliquot contains an

activity between 1 and 4 picocuries. Use Eq. 111–5 in Section 12.6.

11.6 Preparation of Silver Disc for Spontaneous Electrodeposition.

11.6.1 Clean both sides of the polished silver disc with silver cleaner and with degreaser.

11.6.2 Place disc on absorbent paper and spray one side with epoxy spray enamel. This should be carried out in a well-ventilated area, with the disc lying flat to keep paint on one side only. Allow paint to dry for 24 hours before using disc for deposition.

11.7 Sample Analysis.

11.7.1 Add the aliquot of sample solution from Section 11.4.10 to be analyzed for polonium-210, the volume of which was determined in Section 11.5.5, to a suitable 200-ml container to be placed in a constant temperature bath.

Note: Aliquot volume may require a larger container.

11.7.2 If necessary, bring the volume to 100 ml with 1 M HCl. If the aliquot volume exceeds 100 ml, use total aliquot.

11.7.3 Add 200 mg of ascorbic acid and heat solution to 85 °C (185 °F) in a constant temperature bath.

11.7.4 Suspend a silver disc in the heated solution using a glass or plastic rod with a hook inserted through the hole in the disc. The disc should be totally immersed in the solution, and the solution must be stirred constantly, at all times during the plating operation. Maintain the disc in solution for 3 hours.

11.7.5 Remove the silver disc, rinse with deionized distilled water, and allow to air dry at room temperature.

11.7.6 Place the disc, with deposition side (unpainted side) up, on a planchet and secure with double-side plastic tape. Place the planchet with disc in alpha spectrometry system and count for 1000 minutes.

12.0 Data Analysis and Calculations.

12.1 Nomenclature.

A = Picocuries of polonium-210 in the Method 5 sample (from Section 12.8).

A_A = Picocuries of actinide added.

A_L = Volume of sample aliquot used, in ml (specified in Section 11.5.1 as 1 ml).

A_S = Aliquot to be analyzed, in ml.

B_B = Procedure background counts measured in polonium-209 spectral region.

B_T = Polonium-209 tracer counts in sample.

C_T = Total counts in polonium-210 spectral region.

D = Decay correction for time ''t'' (in days) from sample collection to sample counting, given by: $D=e^{-0.005t}$

E_C = Average counting efficiency of detector (from Section 10.1.8), as counts per disintegration.

E_{Ci} = Counting efficiency of the detector for aliquot i of the actinide working solution, counts per disintegration.

E_I = Average counting efficiency of the internal proportional counter, as determined in Section 10.3.4, counts per disintegration.

E_{Ii} = Counting efficiency of the internal proportional counter for aliquot i of the 100 pCi/ml actinide working solution, counts per disintegration.

E_Y = The fraction of polonium-209 recovered on the planchet (from Section 12.7).

F= Average activity of polonium-209 in sample (from Section 10.2.4), in pCi.

F_i = activity of aliquot i of the polonium-209 tracer solution, in pCi.

L = Dilution factor (unitless). This is the volume of sample solution prepared (specified as 250 ml in Section 11.1.10) divided by the volume of the aliquot of sample solution analyzed for polonium-210 (from Section 11.7.1).

M_i = Phosphorous rock processing rate of the source being tested, during run i, Mg/hr.

M_k = Phosphate rock processed annually by source k, in Mg/yr.

n = Number of calciners at the elemental phosphorus plant.

P = Total activity of sample solution from Section 11.4.10, in pCi (see Eq. 111–4).

Q_{sd} = Volumetric flow rate of effluent stream, as determined by Method 2, in dscm/hr.

S = Annual polonium-210 emissions from the entire facility, in curies/yr.

$V_{m(std)}$ = Volume of air sample, as determined by Method 5, in dscm.

X_k = Emission rate from source k, from Section 12.10, in curies/Mg.

10^{-12} = Curies per picocurie.

2.22 = Disintegrations per minute per picocurie.

250 = Volume of solution from Section 11.4.10, in ml.

12.2 Counting Efficiency. Calculate the counting efficiency of the detector for each aliquot of the 1 pCi/ml actinide working solution using Eq. 111–1.

$$E_{Ci} = \frac{C_S - C_B}{2.22\ A_A T} \qquad \text{Eq. 111-1}$$

Where:

C_B = Background counts in same peak area as C_S.

C_S = Gross counts in actinide peak.

T = Counting time in minutes, specified in Section 10.1.6 as 1000 minutes.

12.3 Polonium-209 Tracer Solution Activity. Calculate the activity of each aliquot of the polonium-209 tracer solution using Eq. 111–2.

$$F_i = \frac{C_S - C_B}{2.22\ E_{Ci} T} \qquad \text{Eq. 111-2}$$

Where:

C_B = Background counts in the 4.88 MeV region of spectrum the in the counting time T.

C_S = Gross counts of polonium-209 in the 4.88 MeV region of the spectrum in the counting time T.

T = Counting time, specified in Section 10.1.6 as 1000 minutes.

12.4 Control Efficiency of Internal Proportional Counter. Calculate the counting efficiency of the internal proportional counter for each aliquot of the 100 pCi/ml actinide working solution using Eq. 111–3.

$$E_{Ii} = \frac{C_S - C_B}{2.22\ A_A T} \qquad \text{Eq. 111-3}$$

Where:

C_B = Gross counts of procedure background.

C_S = Gross counts of standard.

T = Counting time in minutes, specified in Section 10.3.2 as 100 minutes.

12.5 Calculate the activity of the sample using Eq. 111–4.

$$P = \frac{250\ (C_S - C_B)}{2.22\ \overline{E_I} A_L T} \qquad \text{Eq. 111-4}$$

Where:

C_B = Total counts of procedure background. (See Section 11.1).

C_S = Total counts of screening sample.

T = Counting time for sample and background (which must be equal), in minutes (specified in Section 11.5.3 as 100 minutes).

12.6 Aliquot Volume. Determine the aliquot volume of the sample solution from Section 11.4.10 to be analyzed for polonium-210 , such that the aliquot contains an activity between 1 and 4 picocuries using Eq. 111–5.

$$A_s = \frac{250\ \text{(desired picocuries in aliquot)}}{P} \qquad \text{Eq. 111-5}$$

12.7 Polonium-209 Recovery. Calculate the fraction of polonium-209 recovered on the planchet, E_Y, using Eq. 111–6.

$$E_Y = \frac{B_T - B_B}{2.22\ \overline{F}\ \overline{E_C}\ T} \qquad \text{Eq. 111-6}$$

Where:

T = Counting time, specified in Section 11.1 as 1000 minutes.

12.8 Polonium-210 Activity. Calculate the activity of polonium-210 in the Method 5 sample (including glass fiber filter and acetone rinse) using Eq. 111–7.

$$A = \frac{(C_T - C_B)\ L}{2.22\ E_y\ \overline{E_C}\ T\ D} \qquad \text{Eq. 111-7}$$

Where:

C_B = Procedure background counts in polonium-210 spectral region.

T = Counting time, specified in Section 11.1 as 1000 minutes for all alpha spectrometry sample and background counts.

12.9 Emission Rate from Each Stack.

12.9.1 For each test run, i, on a stack, calculate the measured polonium-210 emission rate, R_{Si}, using Eq. 111–8.

$$R_{Si} = \frac{(10^{-12})\ A\ Q_{sd}}{V_{m(std)} M_i} \qquad \text{Eq. 111-8}$$

12.9.2 Determine the average polonium-210 emission rate from the stack, R_S, by taking the sum of the measured emission rates for all runs, and dividing by the number of runs performed.

12.9.3 Repeat steps 12.9.1 and 12.9.2 for each stack of each calciner.

12.10 Emission Rate from Each Source. Determine the total polonium-210 emission rate, X_k, from each source, k, by taking the sum of the average emission rates from all stacks to which the source exhausts.

12.11 Annual Polonium-210 Emission Rate from Entire Facility. Determine the annual elemental phosphorus plant emissions of polonium-210, S, using Eq. 111–9.

$$S = \frac{\sum_{k=1}^{n} (X_k M_k)}{n} \qquad \text{Eq. 111-9}$$

13.0 Method Performance. [Reserved]

14.0 Pollution Prevention. [Reserved]

15.0 Waste Management. [Reserved]

16.0 References

1. Blanchard, R.L. ''Rapid Determination of Lead-210 and Polonium-210 in Environmental Samples by Deposition on Nickel.'' Anal. Chem., *38*:189, pp. 189–192. February 1966.

17.0 Tables, Diagrams, Flowcharts, and Validation Data [Reserved]

* * * * *

PART 63—NATIONAL EMISSION STANDARDS FOR HAZARDOUS AIR POLLUTANTS FOR SOURCE CATEGORIES

1. The authority citation for Part 63 continues to read as follows:

Authority: 42 U.S.C. 7401 *et seq.*

§ 63.7 [Amended]

2. Amend § 63.7 by revising paragraph (c)(4)(i) as follows:

§ 63.7 Performance testing requirements.

* * * * *

(c) * * *

(4)(i) Performance test method audit program. The owner or operator shall analyze performance audit (PA) samples during each performance test. The owner or operator shall request performance audit materials 45 days prior to the test date. Cylinder audit gases, if available, must be obtained from the appropriate EPA Regional Office or from the responsible enforcement authority and analyzed in conjunction with the field samples.

* * * * *

§ 63.11 [Amended]

3. Amend § 63.11 as follows:

a. The definition of ''C_i'' in paragraph (b)(6)(ii) is amended by revising ''D1946–77'' to read ''D1946–77 or 90 (Reapproved 1994).''

b. The definition of ''H_i'' in paragraph (b)(6)(ii) is amended by revising ''D2382–76'' to read ''D2382–76 or 88 or D4809–95.''

§ 63.14 [Amended]

4. In § 63.14, by revising paragraph (b) to read as follows:

§ 63.14 Incorporation by reference.

* * * * *

(b) The following materials are available for purchase from at least one of the following addresses: American Society for Testing and Materials (ASTM), 1916 Race Street, Philadelphia, PA 19103; or University Microfilms International, 300 North Zeeb Road, Ann Arbor, MI 48106.

(1) ASTM D523–89, Standard Test Method for Specular Gloss, IBR approved for § 63.782.

(2) ASTM D1193–77, 91, Standard Specification for Reagent Water, IBR approved for Appendix A: Method 306, Sections 7.1.1 and 7.4.2.

(3) ASTM D1331–89, Standard Test Methods for Surface and Interfacial Tension of Solutions of Surface Active Agents, IBR approved for Appendix A: Method 306B, Sections 6.2, 11.1, and 12.2.2.

(4) ASTM D1475–90, Standard Test Method for Density of Paint, Varnish Lacquer, and Related Products, IBR approved for § 63.788, Appendix A.

(5) ASTM D1946–77, 90, 94, Standard Method for Analysis of Reformed Gas by Gas Chromatography, IBR approved for § 63.11(b)(6).

(6) ASTM D2369–93, 95, Standard Test Method for Volatile Content of Coatings, IBR approved for § 63.788, Appendix A.

(7) ASTM D2382–76, 88, Heat of Combustion of Hydrocarbon Fuels by Bomb Calorimeter (High-Precision Method), IBR approved for § 63.11(b)(6).

(8) ASTM D2879–83, 96, Test Method for Vapor Pressure-Temperature Relationship and Initial Decomposition Temperature of Liquids by Isoteniscope, IBR approved for § 63.111 of Subpart G.

(9) ASTM D3257–93, Standard Test Methods for Aromatics in Mineral Spirits by Gas Chromatography, IBR approved for § 63.786(b).

(10) ASTM 3695–88, Standard Test Method for Volatile Alcohols in Water by Direct Aqueous-Injection Gas Chromatography, IBR approved for § 63.365(e)(1) of Subpart O.

(11) ASTM D3792–91, Standard Method for Water Content of Water-Reducible Paints by Direct Injection into a Gas Chromatograph, IBR approved for § 63.788, Appendix A.

(12) ASTM D3912–80, Standard Test Method for Chemical Resistance of Coatings Used in Light-Water Nuclear Power Plants, IBR approved for § 63.782.

(13) ASTM D4017–90, 96a, Standard Test Method for Water in Paints and Paint Materials by the Karl Fischer Titration Method, IBR approved for § 63.788, Appendix A.

(14) ASTM D4082–89, Standard Test Method for Effects of Gamma Radiation on Coatings for Use in Light-Water Nuclear Power Plants, IBR approved for § 63.782.

(15) ASTM D4256–89, 94, Standard Test Method for Determination of the Decontaminability of Coatings Used in Light-Water Nuclear Power Plants, IBR approved for § 63.782.

(16) ASTM D4809–95, Standard Test Method for Heat of Combustion of Liquid Hydrocarbon Fuels by Bomb Calorimeter (Precision Method), IBR approved for § 63.11(b)(6).

(17) ASTM E180–93, Standard Practice for Determining the Precision of ASTM Methods for Analysis and Testing of Industrial Chemicals, IBR approved for § 63.786(b).

(18) ASTM E260–91, 96, General Practice for Packed Column Gas Chromatography, IBR approved for §§ 63.750(b)(2) and 63.786(b)(5).

§ 63.111 [Amended]

5. In § 63.111, paragraph (3) of the definition of the term ''Maximum true vapor pressure'' is amended by revising ''D2879–83'' to read ''D2879–83 or 96.''

§ 63.301 [Amended]

6. Amend § 63.301 as follows:

a. The definition of the term ''Foundry coke producer'' is amended by revising the words ''1.25 million megagrams per year'' to read ''1.25 million megagrams per year (1.38 million tons per year).''

b. The definitions of the terms ''Short coke oven battery'' and ''Tall coke oven battery'' are amended by revising the words ''6 meters'' to read ''6 meters (20 feet)'' wherever they occur.

§ 63.304 [Amended]

7. In § 63.304, paragraph (b)(6)(iii) is amended by revising the words ''2.7 million Mg/yr'' to read ''2.7 million Mg/yr (3.0 million ton/yr).''

§ 63.750 [Amended]

8. In § 63.750, paragraph (b)(2) is amended by revising ''ASTM E 260–91 (incorporated by reference as specified in § 63.14 of subpart A of this part)'' to read ''ASTM E 260–91 or 96 (incorporated by reference—see § 63.14 of Subpart A of this part).''

§ 63.782 [Amended]

9. Amend § 63.782 as follows:

a. The definition for ''*High-gloss specialty coating*'' is amended by revising ''ASTM Method D523,'' to read ''ASTM D523–89.''

b. The definition for Nuclear specialty coating is amended by revising ''ASTM D4256–89,'' to read ''ASTM D4256–89 or 94.''

§ 63.786 [Amended]

10. In § 63.786, paragraph (b)(5) is amended by revising ''ASTM Method E260–91'' to read ''ASTM E260–91 or 96.''

§ 63.788 [Amended]

11. In § 63.788, the Appendix A to Subpart II of Part 63–VOC Data Sheet is amended by revising ''ASTM Method D2369-93,'' and ''ASTM D4017–90'' to read ''ASTM D2369–93 or 95'' and ''ASTM D4017–81, 90, or 96a'' respectively.

Appendix A—[Amended]

12. Amend Method 310B in Appendix A as follows:

a. Section 1.0 is amended by revising ''ethylidene norbornene (ENB)'' to read ''Applicable Termonomer.''

b. Section 1.0 is amended by deleting ''16219–75–3.''

c. In Section 5.0, correcting the section numbering from ''5.1, 5.2, 5.3, 5.3, 5.4, 5.5, 5.6, and 5.7'' to ''5.1, 5.2, 5.3, 5.4, 5.5, 5.6, 5.7, and 5.8.''

d. Sections 5.3, 7.1, 7.2, 7.3, 7.5.6, 7.6, 7.6.1, 9.2, 10.1, 10.2.2, 10.2.5, 10.2.8, 12.3, and 12.6 are amended by revising ''ENB'' to read ''termonomer'' wherever it appears.

e. Sections 6.11, 7.5.1, 9.3.3, 11.1.2, and 12.5 are revised.

f. The first sentence in Section 7.1 is amended by revising to read ''Reagent toluene, EM Science Omnisolv (or equivalent).''

g. Section 7.2 is amended by revising the first sentence to read ''Reagent acetone, EM Science Omnisolv HR-GC (or equivalent).''

h. Section 7.3 is amended by revising the first sentence to read ''Reagent heptane, Aldrich Chemical Gold Label, Cat #15,487–3 (or equivalent).''

i. Section 7.4.5 is amended by revising ''Section 5.4.4'' to read ''7.4.4.''

j. Section 9.3 is amended by revising the first sentence to read ''Recovery efficiency must be determined for high ethylene concentration, low ethylene concentration, E-P terpolymer, or oil extended samples and whenever modifications are made to the method.''

k. Section 13.1 is amended by revising the last sentence to read ''Note: These values are examples; each sample type, as specified in Section 9.3, must be tested for sample recovery.''

The revisions read as follows:

Method 310B-Determination of Residual Hexane Through Gas Chromatography

* * * * *

6.0 Equipment and Supplies * * *

6.11 Crimp-top sample vials and HP p/n 5181–1211 crimp caps, or screw-top autosampler vials and screw tops.

* * * * *

7.5.1 Preparation of Polymer Dissolving Solution. Fill a 4,000-ml volumetric flask about ¾ full with toluene.

* * * * *

9.3.3 The precipitated polymer from the steps described above shall be redissolved using toluene as the solvent. No heptane shall be added to the sample in the second dissolving step. The toluene solvent and acetone precipitant shall be determined to be free of interfering compounds.

* * * * *

11.1.2 Place crumb sample in bottle: RLA–3: 10 g (gives a dry wt. of ~5.5 g).

* * * * *

12.5 After obtaining the final dry weight of polymer used (Section 11.1.10 of this method), record that result in a ''dry wt.'' column of the logbook (for oil extended polymer, the amount of oil extracted is added to the dry rubber weight).

* * * * *

13. Appendix A to Part 63 is amended by revising Methods 303, 303A, 304A, 304B, 305, 306, 306A, and 306B to read as follows:

Method 303—Determination of Visible Emissions From By-Product Coke Oven Batteries

Note: This method is not inclusive with respect to observer certification. Some material is incorporated by reference from other methods in appendix A to 40 CFR part 60. Therefore, to obtain reliable results, persons using this method should have a thorough knowledge of Method 9.

1.0 Scope and Application

1.1 Applicability. This method is applicable for the determination of visible emissions (VE) from the following by-product coke oven battery sources: charging systems during charging; doors, topside port lids, and offtake systems on operating coke ovens; and collecting mains. This method is also applicable for qualifying observers for visually determining the presence of VE.

2.0 Summary of Method

2.1 A certified observer visually determines the VE from coke oven battery sources. Certification procedures are presented. This method does not require that opacity of emissions be determined or that magnitude be differentiated.

3.0 Definitions

3.1 *Bench* means the platform structure in front of the oven doors.

3.2 *By-product Coke Oven Battery* means a source consisting of a group of ovens connected by common walls, where coal undergoes destructive distillation under positive pressure to produce coke and coke oven gas, from which by-products are recovered.

3.3 *Charge or charging period* means the period of time that commences when coal begins to flow into an oven through a topside port and ends when the last charging port is recapped.

3.4 *Charging system* means an apparatus used to charge coal to a coke oven (*e.g.*, a larry car for wet coal charging systems).

3.5 *Coke oven door* means each end enclosure on the push side and the coking side of an oven. The chuck, or leveler-bar, door is considered part of the push side door. The coke oven door area includes the entire area on the vertical face of a coke oven between the bench and the top of the battery between two adjacent buck stays.

3.6 *Coke side* means the side of a battery from which the coke is discharged from ovens at the end of the coking cycle.

3.7 *Collecting* main means any apparatus that is connected to one or more offtake systems and that provides a passage for conveying gases under positive pressure from the by-product coke oven battery to the by-product recovery system.

3.8 *Consecutive charges* means charges observed successively, excluding any charge during which the observer's view of the charging system or topside ports is obscured.

3.9 *Damper-off* means to close off the gas passage between the coke oven and the collecting main, with no flow of raw coke oven gas from the collecting main into the oven or into the oven's offtake system(s).

3.10 *Decarbonization period* means the period of time for combusting oven carbon that commences when the oven lids are removed from an empty oven or when standpipe caps of an oven are opened. The period ends with the initiation of the next charging period for that oven.

3.11 *Larry car* means an apparatus used to charge coal to a coke oven with a wet coal charging system.

3.12 *Log average* means logarithmic average as calculated in Section 12.4.

3.13 *Offtake system* means any individual oven apparatus that is stationary and provides a passage for gases from an oven to a coke oven battery collecting main or to another oven. Offtake system components include the standpipe and standpipe caps, goosenecks, stationary jumper pipes, mini-standpipes, and standpipe and gooseneck connections.

3.14 *Operating oven* means any oven not out of operation for rebuild or maintenance work extensive enough to

require the oven to be skipped in the charging sequence.

3.15 *Oven* means a chamber in the coke oven battery in which coal undergoes destructive distillation to produce coke.

3.16 *Push side* means the side of the battery from which the coke is pushed from ovens at the end of the coking cycle.

3.17 *Run* means the observation of visible emissions from topside port lids, offtake systems, coke oven doors, or the charging of a single oven in accordance with this method.

3.18 *Shed* means an enclosure that covers the side of the coke oven battery, captures emissions from pushing operations and from leaking coke oven doors on the coke side or push side of the coke oven battery, and routes the emissions to a control device or system.

3.19 *Standpipe cap* means An apparatus used to cover the opening in the gooseneck of an offtake system.

3.20 *Topside port lid* means a cover, removed during charging or decarbonizing, that is placed over the opening through which coal can be charged into the oven of a by-product coke oven battery.

3.21 *Traverse time* means accumulated time for a traverse as measured by a stopwatch. Traverse time includes time to stop and write down oven numbers but excludes time waiting for obstructions of view to clear or for time to walk around obstacles.

3.22 *Visible Emissions or VE* means any emission seen by the unaided (except for corrective lenses) eye, excluding steam or condensing water.

4.0 Interferences [Reserved]

5.0 Safety

5.1 Disclaimer. This method may involve hazardous materials, operations, and equipment. This test method may not address all of the safety problems associated with its use. It is the responsibility of the user of this test method to establish appropriate safety and health practices and determine the applicability of regulatory limitations prior to performing this test method.

5.2 Safety Training. Because coke oven batteries have hazardous environments, the training materials and the field training (Section 10.0) shall cover the precautions required by the company to address health and safety hazards. Special emphasis shall be given to the Occupational Safety and Health Administration (OSHA) regulations pertaining to exposure of coke oven workers (see Reference 3 in Section 16.0). In general, the regulation requires that special fire-retardant clothing and respirators be worn in certain restricted areas of the coke oven battery. The OSHA regulation also prohibits certain activities, such as chewing gum, smoking, and eating in these areas.

6.0 Equipment and Supplies [Reserved]

7.0 Reagents and Standards [Reserved]

8.0 Sample Collection, Preservation, Transport, and Storage [Reserved]

9.0 Quality Control [Reserved]

10.0 Calibration and Standardization

Observer certification and training requirements are as follows:

10.1 Certification Procedures. This method requires only the determination of whether VE occur and does not require the determination of opacity levels; therefore, observer certification according to Method 9 in appendix A to part 60 of this chapter is not required to obtain certification under this method. However, in order to receive Method 303 observer certification, the first-time observer (trainee) shall have attended the lecture portion of the Method 9 certification course. In addition, the trainee shall successfully complete the Method 303 training course, satisfy the field observation requirement, and demonstrate adequate performance and sufficient knowledge of Method 303. The Method 303 training course shall be conducted by or under the sanction of the EPA and shall consist of classroom instruction and field observations, and a proficiency test.

10.1.1 The classroom instruction shall familiarize the trainees with Method 303 through lecture, written training materials, and a Method 303 demonstration video. A successful completion of the classroom portion of the Method 303 training course shall be demonstrated by a perfect score on a written test. If the trainee fails to answer all of the questions correctly, the trainee may review the appropriate portion of the training materials and retake the test.

10.1.2 The field observations shall be a minimum of 12 hours and shall be completed before attending the Method 303 certification course. Trainees shall observe the operation of a coke oven battery as it pertains to Method 303, including topside operations, and shall also practice conducting Method 303 or similar methods. During the field observations, trainees unfamiliar with coke battery operations shall receive instruction from an experienced coke oven observer familiar with Method 303 or similar methods and with the operation of coke batteries. The trainee must verify completion of at least 12 hours of field observation prior to attending the Method 303 certification course.

10.1.3 All trainees must demonstrate proficiency in the application of Method 303 to a panel of three certified Method 303 observers, including an ability to differentiate coke oven emissions from condensing water vapor and smoldering coal. Each panel member shall have at least 120 days experience in reading visible emissions from coke ovens. The visible emissions inspections that will satisfy the experience requirement must be inspections of coke oven battery fugitive emissions from the emission points subject to emission standards under subpart L of this part (*i.e.,* coke oven doors, topside port lids, offtake system(s), and charging operations), using either Method 303 or predecessor State or local test methods. A ''day's experience'' for a particular inspection is a day on which one complete inspection was performed for that emission point under Method 303 or a predecessor State or local method. A ''day's experience'' does not mean 8 or 10 hours performing inspections, or any particular time expressed in minutes or hours that may have been spent performing them. Thus, it would be possible for an individual to qualify as a Method 303 panel member for some emission points, but not others (*e.g.,* an individual might satisfy the experience requirement for coke oven doors, but not topside port lids). Until November 15, 1994, the EPA may waive the certification requirement (but not the experience requirement) for panel members. The composition of the panel shall be approved by the EPA. The panel shall observe the trainee in a series of training runs and a series of certification runs. There shall be a minimum of 1 training run for doors, topside port lids, and offtake systems, and a minimum of 5 training runs (*i.e.,* 5 charges) for charging. During training runs, the panel can advise the trainee on proper procedures. There shall be a minimum of 3 certification runs for doors, topside port lids, and offtake systems, and a minimum of 15 certification runs for charging (*i.e.,* 15 charges). The certifications runs shall be unassisted. Following the certification test runs, the panel shall approve or disapprove certification based on the trainee's performance during the certification runs. To obtain certification, the trainee shall demonstrate to the satisfaction of the panel a high degree of proficiency in performing Method 303. To aid in evaluating the trainee's performance, a

checklist, provided by the EPA, will be used by the panel members.

10.2 Observer Certification/Recertification. The coke oven observer certification is valid for 1 year from date of issue. The observer shall recertify annually by viewing the training video and answering all of the questions on the certification test correctly. Every 3 years, an observer shall be required to pass the proficiency test in Section 10.1.3 in order to be certified.

10.3 The EPA (or applicable enforcement agency) shall maintain records reflecting a certified observer's successful completion of the proficiency test, which shall include the completed proficiency test checklists for the certification runs.

10.4 An owner or operator of a coke oven battery subject to subpart L of this part may observe a training and certification program under this section.

11.0 Procedure

11.1 Procedure for Determining VE from Charging Systems During Charging.

11.1.1 Number of Oven Charges. Refer to § 63.309(c)(1) of this part for the number of oven charges to observe. The observer shall observe consecutive charges. Charges that are nonconsecutive can only be observed when necessary to replace observations terminated prior to the completion of a charge because of visual interferences. (See Section 11.1.5).

11.1.2 Data Records. Record all the information requested at the top of the charging system inspection sheet (Figure 303–1). For each charge, record the identification number of the oven being charged, the approximate beginning time of the charge, and the identification of the larry car used for the charge.

11.1.3 Observer Position. Stand in an area or move to positions on the topside of the coke oven battery with an unobstructed view of the entire charging system. For wet coal charging systems or non-pipeline coal charging systems, the observer should have an unobstructed view of the emission points of the charging system, including larry car hoppers, drop sleeves, and the topside ports of the oven being charged. Some charging systems are configured so that all emission points can only be seen from a distance of five ovens. For other batteries, distances of 8 to 12 ovens are adequate.

11.1.4 Observation. The charging period begins when coal begins to flow into the oven and ends when the last charging port is recapped. During the charging period, observe all of the potential sources of VE from the entire charging system. For wet coal charging systems or non-pipeline coal charging systems, sources of VE typically include the larry car hoppers, drop sleeves, slide gates, and topside ports on the oven being charged. Any VE from an open standpipe cap on the oven being charged is included as charging VE.

11.1.4.1 Using an accumulative-type stopwatch with unit divisions of at least 0.5 seconds, determine the total time VE are observed as follows. Upon observing any VE emerging from any part of the charging system, start the stopwatch. Stop the watch when VE are no longer observed emerging, and restart the watch when VE reemerges.

11.1.4.2 When VE occur simultaneously from several points during a charge, consider the sources as one. Time overlapping VE as continuous VE. Time single puffs of VE only for the time it takes for the puff to emerge from the charging system. Continue to time VE in this manner for the entire charging period. Record the accumulated time to the nearest 0.5 second under ''Visible emissions, seconds'' on Figure 303–1.

11.1.5 Visual Interference. If fugitive VE from other sources at the coke oven battery site (*e.g.,* door leaks or condensing water vapor from the coke oven wharf) prevent a clear view of the charging system during a charge, stop the stopwatch and make an appropriate notation under ''Comments'' on Figure 303–1. Label the observation an observation of an incomplete charge, and observe another charge to fulfill the requirements of Section 11.1.1.

11.1.6 VE Exemptions. Do not time the following VE:

11.1.6.1 The VE from burning or smoldering coal spilled on top of the oven, topside port lid, or larry car surfaces;

Note: The VE from smoldering coal are generally white or gray. These VE generally have a plume of less than 1 meter long. If the observer cannot safely and with reasonable confidence determine that VE are from charging, do not count them as charging emissions.

11.1.6.2 The VE from the coke oven doors or from the leveler bar; or

11.1.6.3 The VE that drift from the top of a larry car hopper if the emissions had already been timed as VE from the drop sleeve.

Note: When the slide gate on a larry car hopper closes after the coal has been added to the oven, the seal may not be airtight. On occasions, a puff of smoke observed at the drop sleeves is forced past the slide gate up into the larry car hopper and may drift from the top; time these VE either at the drop sleeves or the hopper. If the larry car hopper does not have a slide gate or the slide gate is left open or partially closed, VE may quickly pass through the larry car hopper without being observed at the drop sleeves and will appear as a strong surge of smoke; time these as charging VE.

11.1.7 Total Time Record. Record the total time that VE were observed for each charging operation in the appropriate column on the charging system inspection sheet.

11.1.8 Determination of Validity of a Set of Observations. Five charging observations (runs) obtained in accordance with this method shall be considered a valid set of observations for that day. No observation of an incomplete charge shall be included in a daily set of observations that is lower than the lowest reading for a complete charge. If both complete and incomplete charges have been observed, the daily set of observations shall include the five highest values observed. Four or three charging observations (runs) obtained in accordance with this method shall be considered a valid set of charging observations only where it is not possible to obtain five charging observations, because visual interferences (see Section 11.1.5) or inclement weather prevent a clear view of the charging system during charging. However, observations from three or four charges that satisfy these requirements shall not be considered a valid set of charging observations if use of such set of observations in a calculation under Section 12.4 would cause the value of A to be less than 145.

11.1.9 Log Average. For each day on which a valid daily set of observations is obtained, calculate the daily 30-day rolling log average of seconds of visible emissions from the charging operation for each battery using these data and the 29 previous valid daily sets of observations, in accordance with Section 12.4.

11.2. Procedure for Determining VE from Coke Oven Door Areas. The intent of this procedure is to determine VE from coke oven door areas by carefully observing the door area from a standard distance while walking at a normal pace.

11.2.1 Number of Runs. Refer to § 63.309(c)(1) of this part for the appropriate number of runs.

11.2.2 Battery Traverse. To conduct a battery traverse, walk the length of the battery on the outside of the pusher machine and quench car tracks at a steady, normal walking pace, pausing to make appropriate entries on the door area inspection sheet (Figure 303–2). A single test run consists of two timed traverses, one for the coke side and one for the push side. The walking pace shall be such that the duration of the traverse does not exceed an average of

4 seconds per oven door, excluding time spent moving around stationary obstructions or waiting for other obstructions to move from positions blocking the view of a series of doors. Extra time is allowed for each leak (a maximum of 10 additional seconds for each leaking door) for the observer to make the proper notation. A walking pace of 3 seconds per oven door has been found to be typical. Record the actual traverse time with a stopwatch.

11.2.2.1 Include in the traverse time only the time spent observing the doors and recording door leaks. To measure actual traverse time, use an accumulative-type stopwatch with unit divisions of 0.5 seconds or less. Exclude interruptions to the traverse and time required for the observer to move to positions where the view of the battery is unobstructed, or for obstructions, such as the door machine, to move from positions blocking the view of a series of doors.

11.2.2.2 Various situations may arise that will prevent the observer from viewing a door or a series of doors. Prior to the door inspection, the owner or operator may elect to temporarily suspend charging operations for the duration of the inspection, so that all of the doors can be viewed by the observer. The observer has two options for dealing with obstructions to view: (a) Stop the stopwatch and wait for the equipment to move or the fugitive emissions to dissipate before completing the traverse; or (b) stop the stopwatch, skip the affected ovens, and move to an unobstructed position to continue the traverse. Restart the stopwatch and continue the traverse. After the completion of the traverse, if the equipment has moved or the fugitive emissions have dissipated, inspect the affected doors. If the equipment is still preventing the observer from viewing the doors, then the affected doors may be counted as not observed. If option (b) is used because of doors blocked by machines during charging operations, then, of the affected doors, exclude the door from the most recently charged oven from the inspection. Record the oven numbers and make an appropriate notation under ''Comments'' on the door area inspection sheet (Figure 303–2).

11.2.2.3 When batteries have sheds to control emissions, conduct the inspection from outside the shed unless the doors cannot be adequately viewed. In this case, conduct the inspection from the bench. Be aware of special safety considerations pertinent to walking on the bench and follow the instructions of company personnel on the required equipment and procedures. If possible, conduct the bench traverse whenever the bench is clear of the door machine and hot coke guide.

11.2.3 Observations. Record all the information requested at the top of the door area inspection sheet (Figure 303–2), including the number of non-operating ovens. Record the clock time at the start of the traverse on each side of the battery. Record which side is being inspected (*i.e.,* coke side or push side). Other information may be recorded at the discretion of the observer, such as the location of the leak (*e.g.,* top of the door, chuck door, etc.), the reason for any interruption of the traverse, or the position of the sun relative to the battery and sky conditions (*e.g.,* overcast, partly sunny, etc.).

11.2.3.1 Begin the test run by starting the stopwatch and traversing either the coke side or the push side of the battery. After completing one side, stop the watch. Complete this procedure on the other side. If inspecting more than one battery, the observer may view the push sides and the coke sides sequentially.

11.2.3.2 During the traverse, look around the entire perimeter of each oven door. The door is considered leaking if VE are detected in the coke oven door area. The coke oven door area includes the entire area on the vertical face of a coke oven between the bench and the top of the battery between two adjacent buck stays (*e.g.,* the oven door, chuck door, between the masonry brick, buck stay or jamb, or other sources). Record the oven number and make the appropriate notation on the door area inspection sheet (Figure 303–2).

Note: Multiple VE from the same door area (*e.g.,* VE from both the chuck door and the push side door) are counted as only one emitting door, not as multiple emitting doors.

11.2.3.3 Do not record the following sources as door area VE:

11.2.3.3.1 VE from ovens with doors removed. Record the oven number and make an appropriate notation under ''Comments;''

11.2.3.3.2 VE from ovens taken out of service. The owner or operator shall notify the observer as to which ovens are out of service. Record the oven number and make an appropriate notation under ''Comments;'' or

11.2.3.3.3 VE from hot coke that has been spilled on the bench as a result of pushing.

11.2.4 Criteria for Acceptance. After completing the run, calculate the maximum time allowed to observe the ovens using the equation in Section 12.2. If the total traverse time exceeds T, void the run, and conduct another run to satisfy the requirements of § 63.309(c)(1) of this part.

11.2.5 Percent Leaking Doors. For each day on which a valid observation is obtained, calculate the daily 30-day rolling average for each battery using these data and the 29 previous valid daily observations, in accordance with Section 12.5.

11.3 Procedure for Determining VE from Topside Port Lids and Offtake Systems.

11.3.1 Number of Runs. Refer to § 63.309(c)(1) of this part for the number of runs to be conducted. Simultaneous runs or separate runs for the topside port lids and offtake systems may be conducted.

11.3.2 Battery Traverse. To conduct a topside traverse of the battery, walk the length of the battery at a steady, normal walking pace, pausing only to make appropriate entries on the topside inspection sheet (Figure 303–3). The walking pace shall not exceed an average rate of 4 seconds per oven, excluding time spent moving around stationary obstructions or waiting for other obstructions to move from positions blocking the view. Extra time is allowed for each leak for the observer to make the proper notation. A walking pace of 3 seconds per oven is typical. Record the actual traverse time with a stopwatch.

11.3.3 Topside Port Lid Observations. To observe lids of the ovens involved in the charging operation, the observer shall wait to view the lids until approximately 5 minutes after the completion of the charge. Record all the information requested on the topside inspection sheet (Figure 303–3). Record the clock time when traverses begin and end. If the observer's view is obstructed during the traverse (*e.g.,* steam from the coke wharf, larry car, etc.), follow the guidelines given in Section 11.2.2.2.

11.3.3.1 To perform a test run, conduct a single traverse on the topside of the battery. The observer shall walk near the center of the battery but may deviate from this path to avoid safety hazards (such as open or closed charging ports, luting buckets, lid removal bars, and topside port lids that have been removed) and any other obstacles. Upon noting VE from the topside port lid(s) of an oven, record the oven number and port number, then resume the traverse. If any oven is dampered-off from the collecting main for decarbonization, note this under ''Comments'' for that particular oven.

Note: Count the number of topside ports, not the number of points, exhibiting VE, *i.e.,* if a topside port has several points of VE, count this as one port exhibiting VE.

11.3.3.2 Do not count the following as topside port lid VE:

11.3.3.2.1 VE from between the brickwork and oven lid casing or VE from cracks in the oven brickwork. Note these VE under ''Comments;''

11.3.3.2.2 VE from topside ports involved in a charging operation. Record the oven number, and make an appropriate notation (*e.g.,* not observed because ports open for charging) under ''Comments;''

11.3.3.2.3 Topside ports having maintenance work done. Record the oven number and make an appropriate notation under ''Comments;'' or

11.3.3.2.4 Condensing water from wet-sealing material. Ports with only visible condensing water from wet-sealing material are counted as observed but not as having VE.

11.3.3.2.5 Visible emissions from the flue inspection ports and caps.

11.3.4 Offtake Systems Observations. To perform a test run, traverse the battery as in Section 11.3.3.1. Look ahead and back two to four ovens to get a clear view of the entire offtake system for each oven. Consider visible emissions from the following points as offtake system VE: (a) the flange between the gooseneck and collecting main (''saddle''), (b) the junction point of the standpipe and oven (''standpipe base''), (c) the other parts of the offtake system (*e.g.,* the standpipe cap), and (d) the junction points with ovens and flanges of jumper pipes.

11.3.4.1 Do not stray from the traverse line in order to get a ''closer look'' at any part of the offtake system unless it is to distinguish leaks from interferences from other sources or to avoid obstacles.

11.3.4.2 If the centerline does not provide a clear view of the entire offtake system for each oven (*e.g.,* when standpipes are longer than 15 feet), the observer may conduct the traverse farther from (rather than closer to) the offtake systems.

11.3.4.3 Upon noting a leak from an offtake system during a traverse, record the oven number. Resume the traverse. If the oven is dampered-off from the collecting main for decarbonization and VE are observed, note this under ''Comments'' for that particular oven.

11.3.4.4 If any part or parts of an offtake system have VE, count it as one emitting offtake system. Each stationary jumper pipe is considered a single offtake system.

11.3.4.5 Do not count standpipe caps open for a decarbonization period or standpipes of an oven being charged as source of offtake system VE. Record the oven number and write ''Not observed'' and the reason (*i.e.,* decarb or charging) under ''Comments.''

Note: VE from open standpipes of an oven being charged count as charging emissions. All VE from closed standpipe caps count as offtake leaks.

11.3.5 Criteria for Acceptance. After completing the run (allow 2 traverses for batteries with double mains), calculate the maximum time allowed to observe the topside port lids and/or offtake systems using the equation in Section 12.3. If the total traverse time exceeds T, void the run and conduct another run to satisfy the requirements of § 63.309(c)(1) of this part.

11.3.6 In determining the percent leaking topside port lids and percent leaking offtake systems, do not include topside port lids or offtake systems with VE from the following ovens:

11.3.6.1 Empty ovens, including ovens undergoing maintenance, which are properly dampered off from the main.

11.3.6.2 Ovens being charged or being pushed.

11.3.6.3 Up to 3 full ovens that have been dampered off from the main prior to pushing.

11.3.6.4 Up to 3 additional full ovens in the pushing sequence that have been dampered off from the main for offtake system cleaning, for decarbonization, for safety reasons, or when a charging/pushing schedule involves widely separated ovens (e.g., a Marquard system); or that have been dampered off from the main for maintenance near the end of the coking cycle. Examples of reasons that ovens are dampered off for safety reasons are to avoid exposing workers in areas with insufficient clearance between standpipes and the larry car, or in areas where workers could be exposed to flames or hot gases from open standpipes, and to avoid the potential for removing a door on an oven that is not dampered off from the main.

11.3.7 Percent Leaking Topside Port Lids and Offtake Systems. For each day on which a valid observation is obtained, calculate the daily 30-day rolling average for each battery using these data and the 29 previous valid daily observations, in accordance with Sections 12.6 and 12.7.

11.4 Procedure for Determining VE from Collecting Mains.

11.4.1 Traverse. To perform a test run, traverse both the collecting main catwalk and the battery topside along the side closest to the collecting main. If the battery has a double main, conduct two sets of traverses for each run, i.e., one set for each main.

11.4.2 Data Recording. Upon noting VE from any portion of a collection main, identify the source and approximate location of the source of VE and record the time under ''Collecting main'' on Figure 303–3; then resume the traverse.

11.4.3 Collecting Main Pressure Check. After the completion of the door traverse, the topside port lids, and offtake systems, compare the collecting main pressure during the inspection to the collecting main pressure during the previous 8 to 24 hours. Record the following: (a) the pressure during inspection, (b) presence of pressure deviation from normal operations, and (c) the explanation for any pressure deviation from normal operations, if any, offered by the operators. The owner or operator of the coke battery shall maintain the pressure recording equipment and conduct the quality assurance/quality control (QA/QC) necessary to ensure reliable pressure readings and shall keep the QA/QC records for at least 6 months. The observer may periodically check the QA/QC records to determine their completeness. The owner or operator shall provide access to the records within 1 hour of an observer's request.

12.0 Data Analysis and Calculations

12.1 Nomenclature.

A = 150 or the number of valid observations (runs). The value of A shall not be less than 145, except for purposes of determinations under § 63.306(c) (work practice plan implementation) or § 63.306(d) (work practice plan revisions) of this part. No set of observations shall be considered valid for such a recalculation that otherwise would not be considered a valid set of observations for a calculation under this paragraph.

D_i = Number of doors on non-operating ovens.

D_{no} = Number of doors not observed.

D_{ob} = Total number of doors observed on operating ovens.

D_t = Total number of oven doors on the battery.

e = 2.72

J = Number of stationary jumper pipes.

L = Number of doors with VE.

L_b = Yard-equivalent reading.

L_s = Number of doors with VE observed from the bench under sheds.

L_y = Number of doors with VE observed from the yard.

L_y = Number of doors with VE observed from the yard on the push side.

ln = Natural logarithm.

N = Total number of ovens in the battery.

N_i = Total number of inoperable ovens.

P_{NO} = Number of ports not observed.

P_{ovn} = Number of ports per oven.

P_{VE} = Number of topside port lids with VE.
PLD = Percent leaking coke oven doors for the test run.
PLL = Percent leaking topside port lids for the run.
PLO = Percent leaking offtake systems.
T = Total time allowed for traverse, seconds.
T_{ovn} = Number of offtake systems (excluding jumper pipes) per oven.
T_{NO} = Number of offtake systems not observed.
T_{VE} = Number of offtake systems with VE.
X_i = Seconds of VE during the ith charge.
Z = Number of topside port lids or offtake systems with VE.

12.2 Criteria for Acceptance for VE Determinations from Coke Oven Door Areas. After completing the run, calculate the maximum time allowed to observe the ovens using the following equation:

$$T = (4 \times D_t) + (10 \times L) \qquad \text{Eq. 303-1}$$

12.3 Criteria for Acceptance for VE Determinations from Topside Port Lids and Offtake Systems. After completing the run (allow 2 traverses for batteries with double mains), calculate the maximum time allowed to observe the topside port lids and/or offtake systems by the following equation:

$$T = (4 \times N) + (10 \times Z) \qquad \text{Eq. 303-2}$$

12.4 Average Duration of VE from Charging Operations. Use Equation 303–3 to calculate the daily 30-day rolling log average of seconds of visible emissions from the charging operation for each battery using these current day's observations and the 29 previous valid daily sets of observations.

$$\text{logarithmic average} = e^y - 1 = \frac{\ln(X_1+1) + \ln(X_2+1) + \ldots \ln(X_A+1)}{A} \qquad \text{Eq. 303-3}$$

12.5 Percent Leaking Doors (PLD). Determine the total number of doors for which observations were made on the coke oven battery as follows:

$$D_{ob} = (2 \times N) - (D_i + D_{no}) \qquad \text{Eq. 303-4}$$

12.5.1 For each test run (one run includes both the coke side and the push side traverses), sum the number of doors with door area VE. For batteries subject to an approved alternative standard under § 63.305 of this part, calculate the push side and the coke side PLD separately.

12.5.2 Calculate percent leaking doors by using Equation 303–5:

$$PLD = \frac{L_y}{D_{ob}} \times 100 \qquad \text{Eq. 303-5}$$

12.5.3 When traverses are conducted from the bench under sheds, calculate the coke side and the push side separately. Use Equation 303–6 to calculate a yard-equivalent reading:

$$L_b = L_s - (N \times 0.06) \qquad \text{Eq. 303-6}$$

If L_b is less than zero, use zero for L_b in Equation 303–7 in the calculation of PLD.

12.5.3.1 Use Equation 303–7 to calculate PLD:

$$PLD = \frac{L_b + L_y}{D_{ob}} \times 100 \qquad \text{Eq. 303-7}$$

Round off PLD to the nearest hundredth of 1 percent and record as the percent leaking coke oven doors for the run.

12.5.3.2 Average Percent Leaking Doors. Use Equation 303–8 to calculate the daily 30-day rolling average percent leaking doors for each battery using these current day's observations and the 29 previous valid daily sets of observations.

$$PLD_{(30\text{-day})} = \frac{(PLD_1 + PLD_2 + \ldots + PLD_{30})}{30} \qquad \text{Eq. 303-8}$$

12.6 Topside Port Lids. Determine the percent leaking topside port lids for each run as follows:

$$PLL = \frac{P_{VE}}{P_{ovn}(N - N_i) - P_{NO}} \times 100 \qquad \text{Eq. 303-9}$$

12.6.1 Round off this percentage to the nearest hundredth of 1 percent and record this percentage as the percent leaking topside port lids for the run.

12.6.2 Average Percent Leaking Topside Port Lids. Use Equation 303–10 to calculate the daily 30-day rolling average percent leaking topside port lids for each battery using these current day's observations and the 29 previous valid daily sets of observations.

$$\text{PLL (30-day)} = \frac{\left(PLL_1 + PLL_2 + \ldots + PLL_{30}\right)}{30} \qquad \text{Eq. 303-10}$$

12.7 Offtake Systems. Determine the percent leaking offtake systems for the run as follows:

$$PLO = \frac{T_{VE}}{T_{ovn}\left(N - N_i\right) + J - T_{NO}} \times 100 \qquad \text{Eq. 303-11}$$

12.7.1 Round off this percentage to the nearest hundredth of 1 percent and record this percentage as the percent leaking offtake systems for the run.

12.7.2 Average Percent Leaking Offtake Systems. Use Equation 303–12 to calculate the daily 30-day rolling average percent leaking offtake systems for each battery using these current day's observations and the 29 previous valid daily sets of observations.

$$\text{PLO (30-day)} = \frac{\left(PLO_1 + PLO_2 \ldots + PLO_{30}\right)}{30} \qquad \text{Eq. 303-12}$$

13.0 Method Performance. [Reserved]

14.0 Pollution Prevention. [Reserved]

15.0 Waste Management. [Reserved]

16.0 References.

1. Missan, R., and A. Stein. Guidelines for Evaluation of Visible Emissions Certification, Field Procedures, Legal Aspects, and Background Material. U.S. Environmental Protection Agency. EPA Publication No. EPA–340/1–75–007. April 1975.

2. Wohlschlegel, P., and D. E. Wagoner. Guideline for Development of a Quality Assurance Program: Volume IX—Visual Determination of Opacity Emission from Stationary Sources. U.S. Environmental Protection Agency. EPA Publication No. EPA–650/4–74–005i. November 1975.

3. U.S. Occupational Safety and Health Administration. Code of Federal Regulations. Title 29, Chapter XVII, Section 1910.1029(g). Washington, D.C. Government Printing Office. July 1, 1990.

4. U.S. Environmental Protection Agency. National Emission Standards for Hazardous Air Pollutants; Coke Oven Emissions from Wet-Coal Charged By-Product Coke Oven Batteries; Proposed Rule and Notice of Public Hearing. Washington, D.C. **Federal Register**. Vol. 52, No. 78 (13586). April 23, 1987.

17.0 Tables, Diagrams, Flowcharts, and Validation Data

Company name:
Battery no.: Date: Run no.:
City, State:
Observer name:
Company representative(s):

Charge No.	Oven No.	Clock time	Visible emissions, seconds	Comments

Charge No.	Oven No.	Clock time	Visible emissions, seconds	Comments

Figure 303–1. Charging System Inspection

Company name:
Battery no.:
Date:
City, State:
Total no. of ovens in battery:
Observer name:
Certification expiration date:
Inoperable ovens:
Company representative(s):
Traverse time CS:
Traverse time PS:
Valid run (Y or N):

Time traverse started/completed	PS/CS	Door No.	Comments (No. of blocked doors, interruptions to traverse, *etc.*)

Figure 303–2. Door Area Inspection.

Company name:
Battery no.:
Date:
City, State:
Total no. of ovens in battery:
Observer name:
Certification expiration date:
Inoperable ovens:
Company representative(s):
Total no. of lids:
Total no. of offtakes:
Total no. of jumper pipes:
Ovens not observed:
Total traverse time:
Valid run (Y or N):

Time traverse started/completed	Type of Inspection (lids, offtakes, collecting main)	Location of VE (Oven #/Port #)	Comments

Figure 303–3. Topside Inspection

Method 303A—Determination of Visible Emissions From Nonrecovery Coke Oven Batteries

Note: This method does not include all of the specifications pertaining to observer certification. Some material is incorporated by reference from other methods in this part and in appendix A to 40 CFR Part 60. Therefore, to obtain reliable results, persons using this method should have a thorough knowledge of Method 9 and Method 303.

1.0 Scope and Application

1.1 Applicability. This method is applicable for the determination of visible emissions (VE) from leaking doors at nonrecovery coke oven batteries.

2.0 Summary of Method

2.1 A certified observer visually determines the VE from coke oven battery sources while walking at a normal pace. This method does not require that opacity of emissions be determined or that magnitude be differentiated.

3.0 Definitions

3.1 *Bench* means the platform structure in front of the oven doors.

3.2 *Coke oven door* means each end enclosure on the push side and the coking side of an oven.

3.3 *Coke side* means the side of a battery from which the coke is discharged from ovens at the end of the coking cycle.

3.4 *Nonrecovery coke oven battery* means a source consisting of a group of ovens connected by common walls and operated as a unit, where coal undergoes destructive distillation under negative pressure to produce coke, and which is designed for the combustion of coke oven gas from which by-products are not recovered.

3.5 *Operating oven* means any oven not out of operation for rebuild or maintenance work extensive enough to require the oven to be skipped in the charging sequence.

3.6 *Oven* means a chamber in the coke oven battery in which coal undergoes destructive distillation to produce coke.

3.7 *Push side* means the side of the battery from which the coke is pushed from ovens at the end of the coking cycle.

3.8 *Run* means the observation of visible emissions from coke oven doors in accordance with this method.

3.9 *Shed* means an enclosure that covers the side of the coke oven battery, captures emissions from pushing operations and from leaking coke oven doors on the coke side or push side of the coke oven battery, and routes the emissions to a control device or system.

3.10 *Traverse time* means accumulated time for a traverse as measured by a stopwatch. Traverse time includes time to stop and write down oven numbers but excludes time waiting for obstructions of view to clear or for time to walk around obstacles.

3.11 *Visible Emissions or VE* means any emission seen by the unaided (except for corrective lenses) eye, excluding steam or condensing water.

4.0 Interferences. [Reserved]

5.0 Safety

5.1 Disclaimer. This method may involve hazardous materials, operations, and equipment. This test method may not address all of the safety problems associated with its use. It is the responsibility of the user of this test method to establish appropriate safety and health practices and determine the applicability of regulatory limitations prior to performing this test method.

5.2 Safety Training. Because coke oven batteries have hazardous environments, the training materials and the field training (Section 10.0) shall cover the precautions required by the company to address health and safety hazards. Special emphasis shall be given to the Occupational Safety and Health Administration (OSHA) regulations pertaining to exposure of coke oven workers (see Reference 3 in Section 16.0). In general, the regulation requires that special fire-retardant clothing and respirators be worn in certain restricted areas of the coke oven battery. The OSHA regulation also prohibits certain activities, such as chewing gum, smoking, and eating in these areas.

6.0 Equipment and Supplies. [Reserved]

7.0 Reagents and Standards [Reserved]

8.0 Sample Collection, Preservation, Transport, and Storage. [Reserved]

9.0 Quality Control. [Reserved]

10.0 Calibration and Standardization.

10.1 Training. This method requires only the determination of whether VE occur and does not require the determination of opacity levels; therefore, observer certification according to Method 9 in Appendix A to Part 60 is not required. However, the first-time observer (trainee) shall have attended the lecture portion of the Method 9 certification course. Furthermore, before conducting any VE observations, an observer shall become familiar with nonrecovery coke oven battery operations and with this test method by observing for a minimum of 4 hours the operation of a nonrecovery coke oven battery in the presence of personnel experienced in performing Method 303 assessments.

11.0 Procedure

The intent of this procedure is to determine VE from coke oven door areas by carefully observing the door area while walking at a normal pace.

11.1 Number of Runs. Refer to § 63.309(c)(1) of this part for the appropriate number of runs.

11.2 Battery Traverse. To conduct a battery traverse, walk the length of the battery on the outside of the pusher machine and quench car tracks at a steady, normal walking pace, pausing to make appropriate entries on the door area inspection sheet (Figure 303A–1). The walking pace shall be such that the duration of the traverse does not exceed an average of 4 seconds per oven door, excluding time spent moving around stationary obstructions or waiting for other obstructions to move from positions blocking the view of a series of doors. Extra time is allowed for each leak (a maximum of 10 additional seconds for each leaking door) for the observer to make the proper notation. A walking pace of 3 seconds per oven door has been found to be typical. Record the actual traverse time with a stopwatch. A single test run consists of two timed traverses, one for the coke side and one for the push side.

11.2.1 Various situations may arise that will prevent the observer from viewing a door or a series of doors. The observer has two options for dealing with obstructions to view: (a) Wait for the equipment to move or the fugitive emissions to dissipate before completing the traverse; or (b) skip the affected ovens and move to an unobstructed position to continue the traverse. Continue the traverse. After the completion of the traverse, if the equipment has moved or the fugitive emissions have dissipated, complete the traverse by inspecting the affected doors. Record the oven numbers and make an appropriate notation under ''Comments'' on the door area inspection sheet (Figure 303A–1).

Note: Extra time incurred for handling obstructions is not counted in the traverse time.

11.2.2 When batteries have sheds to control pushing emissions, conduct the inspection from outside the shed, if the shed allows such observations, or from the bench. Be aware of special safety considerations pertinent to walking on the bench and follow the instructions of company personnel on the required equipment and operations procedures. If possible, conduct the bench traverse whenever the bench is clear of the door machine and hot coke guide.

11.3 Observations. Record all the information requested at the top of the door area inspection sheet (Figure 303A–1), including the number of non-operating ovens. Record which side is being inspected, *i.e.,* coke side or push side. Other information may be recorded at the discretion of the observer, such as the location of the leak (*e.g.,* top of the door), the reason for any interruption of the traverse, or the position of the sun relative to the battery and sky conditions (*e.g.,* overcast, partly sunny, etc.).

11.3.1 Begin the test run by traversing either the coke side or the push side of the battery. After completing one side, traverse the other side.

11.3.2 During the traverse, look around the entire perimeter of each oven door. The door is considered leaking if VE are detected in the coke oven door area. The coke oven door area includes the entire area on the vertical face of a coke oven between the bench and the top of the battery and the

adjacent doors on both sides. Record the oven number and make the appropriate notation on the door area inspection sheet (Figure 303A–1).

11.3.3 Do not record the following sources as door area VE:

11.3.3.1 VE from ovens with doors removed. Record the oven number and make an appropriate notation under ''Comments'';

11.3.3.2 VE from ovens where maintenance work is being conducted. Record the oven number and make an appropriate notation under ''Comments''; or

11.3.3.3 VE from hot coke that has been spilled on the bench as a result of pushing.

12.0 Data Analysis and Calculations

Same as Method 303, Section 12.1, 12.2, 12.3, 12.4, and 12.5.

13.0 Method Performance. [Reserved]

14.0 Pollution Prevention. [Reserved]

15.0 Waste Management. [Reserved]

16.0 References

Same as Method 303, Section 16.0.

17.0 Tables, Diagrams, Flowcharts, and Validation Data

Company name:
Battery no.:
Date:
City, State:
Total no. of ovens in battery:
Observer name:
Certification expiration date:
Inoperable ovens:
Company representative(s):
Traverse time CS:
Traverse time PS:
Valid run (Y or N):

Time traverse started/completed	PS/CS	Door No.	Comments (No. of blocked doors, interruptions to traverse, *etc.*)

Figure 303A–1. Door Area Inspection

Method 304A: Determination of Biodegradation Rates of Organic Compounds (Vent Option)

1.0 Scope and Application

1.1 Applicability. This method is applicable for the determination of biodegradation rates of organic compounds in an activated sludge process. The test method is designed to evaluate the ability of an aerobic biological reaction system to degrade or destroy specific components in waste streams. The method may also be used to determine the effects of changes in wastewater composition on operation. The biodegradation rates determined by utilizing this method are not representative of a full-scale system. The rates measured by this method shall be used in conjunction with the procedures listed in appendix C of this part to calculate the fraction emitted to the air versus the fraction biodegraded.

2.0 Summary of Method

2.1 A self-contained benchtop bioreactor system is assembled in the laboratory. A sample of mixed liquor is added and the waste stream is then fed continuously. The benchtop bioreactor is operated under conditions nearly identical to the target full-scale activated sludge process. Bioreactor temperature, dissolved oxygen concentration, average residence time in the reactor, waste composition, biomass concentration, and biomass composition of the full-scale process are the parameters which are duplicated in the benchtop bioreactor. Biomass shall be removed from the target full-scale activated sludge unit and held for no more than 4 hours prior to use in the benchtop bioreactor. If antifoaming agents are used in the full-scale system, they shall also be used in the benchtop bioreactor. The feed flowing into and the effluent exiting the benchtop bioreactor are analyzed to determine the biodegradation rates of the target compounds. The flow rate of the exit vent is used to calculate the concentration of target compounds (utilizing Henry's law) in the exit gas stream. If Henry's law constants for the compounds of interest are not known, this method cannot be used in the determination of the biodegradation rate and Method 304B is the suggested method. The choice of analytical methodology for measuring the compounds of interest at the inlet and outlet to the benchtop bioreactor are left to the discretion of the source, except where validated methods are available.

3.0 Definitions. [Reserved]

4.0 Interferences. [Reserved]

5.0 Safety

5.1 If explosive gases are produced as a byproduct of biodegradation and could realistically pose a hazard, closely monitor headspace concentration of these gases to ensure laboratory safety. Placement of the benchtop bioreactor system inside a laboratory hood is recommended regardless of byproducts produced.

6.0. Equipment and Supplies

Note: Figure 304A–1 illustrates a typical laboratory apparatus used to measure biodegradation rates. While the following description refers to Figure 304A–1, the EPA recognizes that alternative reactor configurations, such as alternative reactor shapes and locations of probes and the feed inlet, will also meet the intent of this method. Ensure that the benchtop bioreactor system is self-contained and isolated from the atmosphere (except for the exit vent stream) by leak-checking fittings, tubing, etc.

6.1 Benchtop Bioreactor. The biological reaction is conducted in a biological oxidation reactor of at least 6 liters capacity. The benchtop bioreactor is sealed and equipped with internal probes for controlling and monitoring dissolved oxygen and internal temperature. The top of the reactor is equipped for aerators, gas flow ports, and instrumentation (while ensuring that no leaks to the atmosphere exist around the fittings).

6.2 Aeration gas. Aeration gas is added to the benchtop bioreactor through three diffusers, which are glass tubes that extend to the bottom fifth of the reactor depth. A pure oxygen pressurized cylinder is recommended in order to maintain the specified oxygen concentration. Install a blower (*e.g.,* Diaphragm Type, 15 SCFH capacity) to blow the aeration gas into the reactor diffusers. Measure the aeration gas flow rate with a rotameter (*e.g.,* 0–15 SCFH recommended). The aeration gas will rise through the benchtop bioreactor, dissolving oxygen into the mixture in the process. The aeration gas must provide sufficient agitation to keep the solids in suspension. Provide an exit for the aeration gas from the top flange of the benchtop bioreactor through a water-cooled (*e.g.,* Allihn-type) vertical condenser. Install the condenser through a gas-tight fitting in the benchtop bioreactor closure. Install a splitter which directs a portion of the gas to an exit vent and the rest of the gas through an air recycle pump back to the benchtop bioreactor. Monitor and record the flow rate through the exit vent at least 3 times per day throughout the day.

6.3 Wastewater Feed. Supply the wastewater feed to the benchtop bioreactor in a collapsible low-density polyethylene container or collapsible liner in a container (*e.g.,* 20 L) equipped with a spigot cap (collapsible containers or liners of other material may be required due to the permeability of some volatile compounds through polyethylene). Obtain the wastewater feed by sampling the wastewater feed in the target process. A representative sample of wastewater shall be obtained from the piping leading to the aeration tank. This sample may be obtained from existing sampling valves at the discharge of the wastewater feed pump, or collected from a pipe discharging to the aeration tank, or by pumping from a well-mixed equalization tank upstream from the aeration tank. Alternatively, wastewater can be pumped continuously to the laboratory apparatus from a bleed stream taken from the equalization tank of the full-scale treatment system.

6.3.1 Refrigeration System. Keep the wastewater feed cool by ice or by refrigeration to 4°C. If using a bleed stream from the equalization tank, refrigeration is not required if the residence time in the bleed stream is less than five minutes.

6.3.2 Wastewater Feed Pump. The wastewater is pumped from the refrigerated container using a variable-speed peristaltic pump drive equipped with a peristaltic pump head. Add the feed solution to the benchtop bioreactor through a fitting on the top flange. Determine the rate of feed addition to provide a retention time in the benchtop bioreactor that is numerically equivalent to the retention time in the full-scale system. The wastewater shall be fed at a rate sufficient to achieve 90 to 100 percent of the full-scale system residence time.

6.3.3 Treated wastewater feed. The benchtop bioreactor effluent exits at the bottom of the reactor through a tube and proceeds to the clarifier.

6.4 Clarifier. The effluent flows to a separate closed clarifier that allows separation of biomass and effluent (*e.g.,* 2-liter pear-shaped glass separatory funnel, modified by removing the stopcock and adding a 25-mm OD glass tube at the bottom). Benchtop bioreactor effluent enters the clarifier through a tube inserted to a depth of 0.08 m (3 in.) through a stopper at the top of the

clarifier. System effluent flows from a tube inserted through the stopper at the top of the clarifier to a drain (or sample bottle when sampling). The underflow from the clarifier leaves from the glass tube at the bottom of the clarifier. Flexible tubing connects this fitting to the sludge recycle pump. This pump is coupled to a variable speed pump drive. The discharge from this pump is returned through a tube inserted in a port on the side of the benchtop bioreactor. An additional port is provided near the bottom of the benchtop bioreactor for sampling the reactor contents. The mixed liquor from the benchtop bioreactor flows into the center of the clarifier. The clarified system effluent separates from the biomass and flows through an exit near the top of the clarifier. There shall be no headspace in the clarifier.

6.5 Temperature Control Apparatus. Capable of maintaining the system at a temperature equal to the temperature of the full-scale system. The average temperature should be maintained within ±2 °C of the set point.

6.5.1 Temperature Monitoring Device. A resistance type temperature probe or a thermocouple connected to a temperature readout with a resolution of 0.1 °C or better.

6.5.2 Benchtop Bioreactor Heater. The heater is connected to the temperature control device.

6.6 Oxygen Control System. Maintain the dissolved oxygen concentration at the levels present in the full-scale system. Target full-scale activated sludge systems with dissolved oxygen concentration below 2 mg/L are required to maintain the dissolved oxygen concentration in the benchtop ioreactor within 0.5 mg/L of the target dissolved oxygen level. Target full-scale activated sludge systems with dissolved oxygen concentration above 2 mg/L are required to maintain the dissolved oxygen concentration in the benchtop bioreactor within 1.5 mg/L of the target dissolved oxygen concentration; however, for target full-scale activated sludge systems with dissolved oxygen concentrations above 2 mg/L, the dissolved oxygen concentration in the benchtop bioreactor may not drop below 1.5 mg/L. If the benchtop bioreactor is outside the control range, the dissolved oxygen is noted and the reactor operation is adjusted.

6.6.1 Dissolved Oxygen Monitor. Dissolved oxygen is monitored with a polarographic probe (gas permeable membrane) connected to a dissolved oxygen meter (*e.g.,* 0 to 15 mg/L, 0 to 50 °C).

6.6.2 Benchtop Bioreactor Pressure Monitor. The benchtop bioreactor pressure is monitored through a port in the top flange of the reactor. This is connected to a gauge control with a span of 13-cm water vacuum to 13-cm water pressure or better. A relay is activated when the vacuum exceeds an adjustable setpoint which opens a solenoid valve (normally closed), admitting oxygen to the system. The vacuum setpoint controlling oxygen addition to the system shall be set at approximately 2.5 ± 0.5 cm water and maintained at this setting except during brief periods when the dissolved oxygen concentration is adjusted.

6.7 Connecting Tubing. All connecting tubing shall be Teflon or equivalent in impermeability. The only exception to this specification is the tubing directly inside the pump head of the wastewater feed pump, which may be Viton, Silicone or another type of flexible tubing.

Note: Mention of trade names or products does not constitute endorsement by the U.S. Environmental Protection Agency.

7.0 Reagents and Standards

7.1 Wastewater. Obtain a representative sample of wastewater at the inlet to the full-scale treatment plant if there is an existing full-scale treatment plant (see section 6.3). If there is no existing full-scale treatment plant, obtain the wastewater sample as close to the point of determination as possible. Collect the sample by pumping the wastewater into the 20-L collapsible container. The loss of volatiles shall be minimized from the wastewater by collapsing the container before filling, by minimizing the time of filling, and by avoiding a headspace in the container after filling. If the wastewater requires the addition of nutrients to support the biomass growth and maintain biomass characteristics, those nutrients are added and mixed with the container contents after the container is filled.

7.2 Biomass. Obtain the biomass or activated sludge used for rate constant determination in the bench-scale process from the existing full-scale process or from a representative biomass culture (*e.g.,* biomass that has been developed for a future full-scale process). This biomass is preferentially obtained from a thickened acclimated mixed liquor sample. Collect the sample either by bailing from the mixed liquor in the aeration tank with a weighted container, or by collecting aeration tank effluent at the effluent overflow weir. Transport the sample to the laboratory within no more than 4 hours of collection. Maintain the biomass concentration in the benchtop bioreactor at the level of the full-scale system +10 percent throughout the sampling period of the test method.

8.0 Sample Collection, Preservation, Storage, and Transport

8.1 Benchtop Bioreactor Operation. Charge the mixed liquor to the benchtop bioreactor, minimizing headspace over the liquid surface to minimize entrainment of mixed liquor in the circulating gas. Fasten the benchtop bioreactor headplate to the reactor over the liquid surface. Maintain the temperature of the contents of the benchtop bioreactor system at the temperature of the target full-scale system, ±2 °C, throughout the testing period. Monitor and record the temperature of the benchtop bioreactor contents at least to the nearest 0.1 °C.

8.1.1 Wastewater Storage. Collect the wastewater sample in the 20-L collapsible container. Store the container at 4 °C throughout the testing period. Connect the container to the benchtop bioreactor feed pump.

8.1.2 Wastewater Flow Rate.

8.1.2.1 The hydraulic residence time of the aeration tank is calculated as the ratio of the volume of the tank (L) to the flow rate (L/min). At the beginning of a test, the container shall be connected to the feed pump and solution shall be pumped to the benchtop bioreactor at the required flow rate to achieve the calculated hydraulic residence time of wastewater in the aeration tank.

$$Q_{test} = Q_{fs} \frac{L}{V_{fs}} \qquad \text{Eq. 304A-1}$$

Where:

Q_{test} = wastewater flow rate (L/min)

Q_{fs} = average flow rate of full-scale process (L/min)

V_{fs} = volume of full-scale aeration tank (L)

8.1.2.2 The target flow rate in the test apparatus is the same as the flow rate in the target full-scale process

multiplied by the ratio of benchtop bioreactor volume (e.g., 6 L) to the volume of the full-scale aeration tank. The hydraulic residence time shall be maintained at 90 to 100 percent of the residence time maintained in the full-scale unit. A nominal flow rate is set on the pump based on a pump calibration. Changes in the elasticity of the tubing in the pump head and the accumulation of material in the tubing affect this calibration. The nominal pumping rate shall be changed as necessary based on volumetric flow measurements. Discharge the benchtop bioreactor effluent to a wastewater storage, treatment, or disposal facility, except during sampling or flow measurement periods.

8.1.3 Sludge Recycle Rate. Set the sludge recycle rate at a rate sufficient to prevent accumulation in the bottom of the clarifier. Set the air circulation rate sufficient to maintain the biomass in suspension.

8.1.4 Benchtop Bioreactor Operation and Maintenance. Temperature, dissolved oxygen concentration, exit vent flow rate, benchtop bioreactor effluent flow rate, and air circulation rate shall be measured and recorded three times throughout each day of benchtop bioreactor operation. If other parameters (such as pH) are measured and maintained in the target full-scale unit, these parameters, where appropriate, shall be monitored and maintained to target full-scale specifications in the benchtop bioreactor. At the beginning of each sampling period (Section 8.2), sample the benchtop bioreactor contents for suspended solids analysis. Take this sample by loosening a clamp on a length of tubing attached to the lower side port. Determine the suspended solids gravimetrically by the Gooch crucible/glass fiber filter method for total suspended solids, in accordance with Standard Methods[3] or equivalent. When necessary, sludge shall be wasted from the lower side port of the benchtop bioreactor, and the volume that is wasted shall be replaced with an equal volume of the reactor effluent. Add thickened activated sludge mixed liquor as necessary to the benchtop bioreactor to increase the suspended solids concentration to the desired level. Pump this mixed liquor to the benchtop bioreactor through the upper side port (Item 24 in Figure 304A–1). Change the membrane on the dissolved oxygen probe before starting the test. Calibrate the oxygen probe immediately before the start of the test and each time the membrane is changed.

8.1.5 Inspection and Correction Procedures. If the feed line tubing becomes clogged, replace with new tubing. If the feed flow rate is not within 5 percent of target flow any time the flow rate is measured, reset pump or check the flow measuring device and measure flow rate again until target flow rate is achieved.

8.2 Test Sampling. At least two and one half hydraulic residence times after the system has reached the targeted specifications shall be permitted to elapse before the first sample is taken. Effluent samples of the clarifier discharge (Item 20 in Figure 304A–1) and the influent wastewater feed are collected in 40-mL septum vials to which two drops of 1:10 hydrochloric acid (HCl) in water have been added. Sample the clarifier discharge directly from the drain line. These samples will be composed of the entire flow from the system for a period of several minutes. Feed samples shall be taken from the feed pump suction line after temporarily stopping the benchtop bioreactor feed, removing a connector, and squeezing the collapsible feed container. Store both influent and effluent samples at 4 °C immediately after collection and analyze within 8 hours of collection.

8.2.1 Frequency of Sampling. During the test, sample and analyze the wastewater feed and the clarifier effluent at least six times. The sampling intervals shall be separated by at least 8 hours. During any individual sampling interval, sample the wastewater feed simultaneously with or immediately after the effluent sample. Calculate the relative standard deviation (RSD) of the amount removed (*i.e.,* effluent concentration—wastewater feed concentration). The RSD values shall be < 15 percent. If an RSD value is > 15 percent, continue sampling and analyzing influent and effluent sets of samples until the RSD values are within specifications.

8.2.2 Sampling After Exposure of System to Atmosphere. If, after starting sampling procedures, the benchtop bioreactor system is exposed to the atmosphere (due to leaks, maintenance, etc.), allow at least one hydraulic residence time to elapse before resuming sampling.

9.0 Quality Control

9.1 Dissolved Oxygen. Fluctuation in dissolved oxygen concentration may occur for numerous reasons, including undetected gas leaks, increases and decreases in mixed liquor suspended solids resulting from cell growth and solids loss in the effluent stream, changes in diffuser performance, cycling of effluent flow rate, and overcorrection due to faulty or sluggish dissolved oxygen probe response. Control the dissolved oxygen concentration in the benchtop bioreactor by changing the proportion of oxygen in the circulating aeration gas. Should the dissolved oxygen concentration drift below the designated experimental condition, bleed a small amount of aeration gas from the system on the pressure side (i.e., immediately upstream of one of the diffusers). This will create a vacuum in the system, triggering the pressure sensitive relay to open the solenoid valve and admit oxygen to the system. Should the dissolved oxygen concentration drift above the designated experimental condition, slow or stop the oxygen input to the system until the dissolved oxygen concentration approaches the correct level.

9.2 Sludge Wasting.

9.2.1 Determine the suspended solids concentration (section 8.1.4) at the beginning of a test, and once per day thereafter during the test. If the test is completed within a two day period, determine the suspended solids concentration after the final sample set is taken. If the suspended solids concentration exceeds the specified concentration, remove a fraction of the sludge from the benchtop bioreactor. The required volume of mixed liquor to remove is determined as follows:

$$V_w = V_r\left(\frac{S_m - S_s}{S_m}\right) \qquad \text{Eq. 304A-2}$$

Where:

V_w is the wasted volume (Liters),

V_r is the volume of the benchtop bioreactor (Liters),

S_m is the measured solids (g/L), and

S_s is the specified solids (g/L).

9.2.2 Remove the mixed liquor from the benchtop bioreactor by loosening a clamp on the mixed liquor sampling tube and allowing the required volume to drain to a graduated flask. Clamp the tube when the correct volume has been

wasted. Replace the volume of the liquid wasted by pouring the same volume of effluent back into the benchtop bioreactor. Dispose of the waste sludge properly.

9.3 Sludge Makeup. In the event that the suspended solids concentration is lower than the specifications, add makeup sludge back into the benchtop bioreactor. Determine the amount of sludge added by the following equation:

$$V_w = V_r\left(\frac{S_s - S_m}{S_w}\right) \qquad \text{Eq. 304A-3}$$

Where:

V_w is the volume of sludge to add (Liters),

V_r is the volume of the benchtop bioreactor (Liters),

S_w is the solids in the makeup sludge (g/L),

S_m is the measured solids (g/L), and S_s is the specified solids (g/L).

10.0 Calibration and Standardization

10.1 Wastewater Pump Calibration. Determine the wastewater flow rate by collecting the system effluent for a time period of at least one hour, and measuring the volume with a graduated cylinder. Record the collection time period and volume collected. Determine flow rate. Adjust the pump speed to deliver the specified flow rate.

10.2 Calibration Standards. Prepare calibration standards from pure certified standards in an aqueous medium. Prepare and analyze three concentrations of calibration standards for each target component (or for a mixture of components) in triplicate daily throughout the analyses of the test samples. At each concentration level, a single calibration shall be within 5 percent of the average of the three calibration results. The low and medium calibration standards shall bracket the expected concentration of the effluent (treated) wastewater. The medium and high standards shall bracket the expected influent concentration.

11.0 Analytical Procedures

11.1 Analysis. If the identity of the compounds of interest in the wastewater is not known, a representative sample of the wastewater shall be analyzed in order to identify all of the compounds of interest present. A gas chromatography/mass spectrometry screening method is recommended.

11.1.1 After identifying the compounds of interest in the wastewater, develop and/or use one or more analytical techniques capable of measuring each of those compounds (more than one analytical technique may be required, depending on the characteristics of the wastewater). Test Method 18, found in appendix A of 40 CFR 60, may be used as a guideline in developing the analytical technique. Purge and trap techniques may be used for analysis providing the target components are sufficiently volatile to make this technique appropriate. The limit of quantitation for each compound shall be determined (see reference 1). If the effluent concentration of any target compound is below the limit of quantitation determined for that compound, the operation of the Method 304 unit may be altered to attempt to increase the effluent concentration above the limit of quantitation. Modifications to the method shall be approved prior to the test. The request should be addressed to Method 304 contact, Emissions Measurement Center, Mail Drop 19, U.S. Environmental Protection Agency, Research Triangle Park, NC 27711.

12.0 Data Analysis and Calculations

12.1 Nomenclature. The following symbols are used in the calculations.

C_i = Average inlet feed concentration for a compound of interest, as analyzed (mg/L)

C_o = Average outlet (effluent) concentration for a compound of interest, as analyzed (mg/L)

X = Biomass concentration, mixed liquor suspended solids (g/L)

t = Hydraulic residence time in the benchtop bioreactor (hours)

V = Volume of the benchtop bioreactor (L)

Q = Flow rate of wastewater into the benchtop bioreactor, average (L/hour)

12.2 Residence Time. The hydraulic residence time of the benchtop bioreactor is equal to the ratio of the volume of the benchtop bioreactor (L) to the flow rate (L/h):

$$t = \frac{V}{Q} \qquad \text{Eq. 304A-4}$$

12.3 Rate of Biodegradation. Calculate the rate of biodegradation for each component with the following equation:

$$\text{Rate}\left(\frac{mg}{L-h}\right) = \frac{C_i - C_o}{t} \qquad \text{Eq. 304A-5}$$

12.4 First-Order Biorate Constant. Calculate the first-order biorate constant (K1) for each component with the following equation:

$$K1\left(\frac{L}{g-h}\right) = \frac{C_i - C_o}{t\,C_o\,X} \qquad \text{Eq. 304A-6}$$

12.5 Relative Standard Deviation (RSD). Determine the standard deviation of both the influent and effluent sample concentrations (S) using the following equation:

$$RSD = \frac{100}{\bar{S}}\left(\sum_{i=1}^{n}\frac{\left(S_i - \bar{S}\right)^2}{(n-1)}\right)^{1/2} \qquad \text{Eq. 304A-7}$$

12.6 Determination of Percent Air Emissions and Percent Biodegraded. Use the results from this test method and follow the applicable procedures in appendix C of 40 CFR part 63, entitled, ''Determination of the Fraction Biodegraded (F_{bio}) in a Biological Treatment Unit'' to determine F_{bio}.

13.0 Method Performance, [Reserved]

14.0 Pollution Prevention, [Reserved]

15.0 Waste Management, [Reserved]

16.0 References

1. ''Guidelines for data acquisition and data quality evaluation in Environmental Chemistry,'' Daniel MacDoughal, Analytical Chemistry, Volume 52, p. 2242, 1980.

2. Test Method 18, 40 CFR 60, appendix A.

3. Standard Methods for the Examination of Water and Wastewater, 16th Edition, Method 209C, Total Suspended Solids Dried at 103–105 °C, APHA, 1985.

4. Water7, Hazardous Waste Treatment, Storage, and Disposal Facilities (TSDF)—Air Emission Models, U.S. Environmental Protection Agency, EPA–450/3–87–026, Review Draft, November 1989.

5. Chemdat7, Hazardous Waste Treatment, Storage, and Disposal Facilities (TSDF)—Air Emission Models, U.S. Environmental Protection Agency, EPA–450/3–87–026, Review Draft, November 1989.

17.0 Tables, Diagrams, Flowcharts, and Validation Data

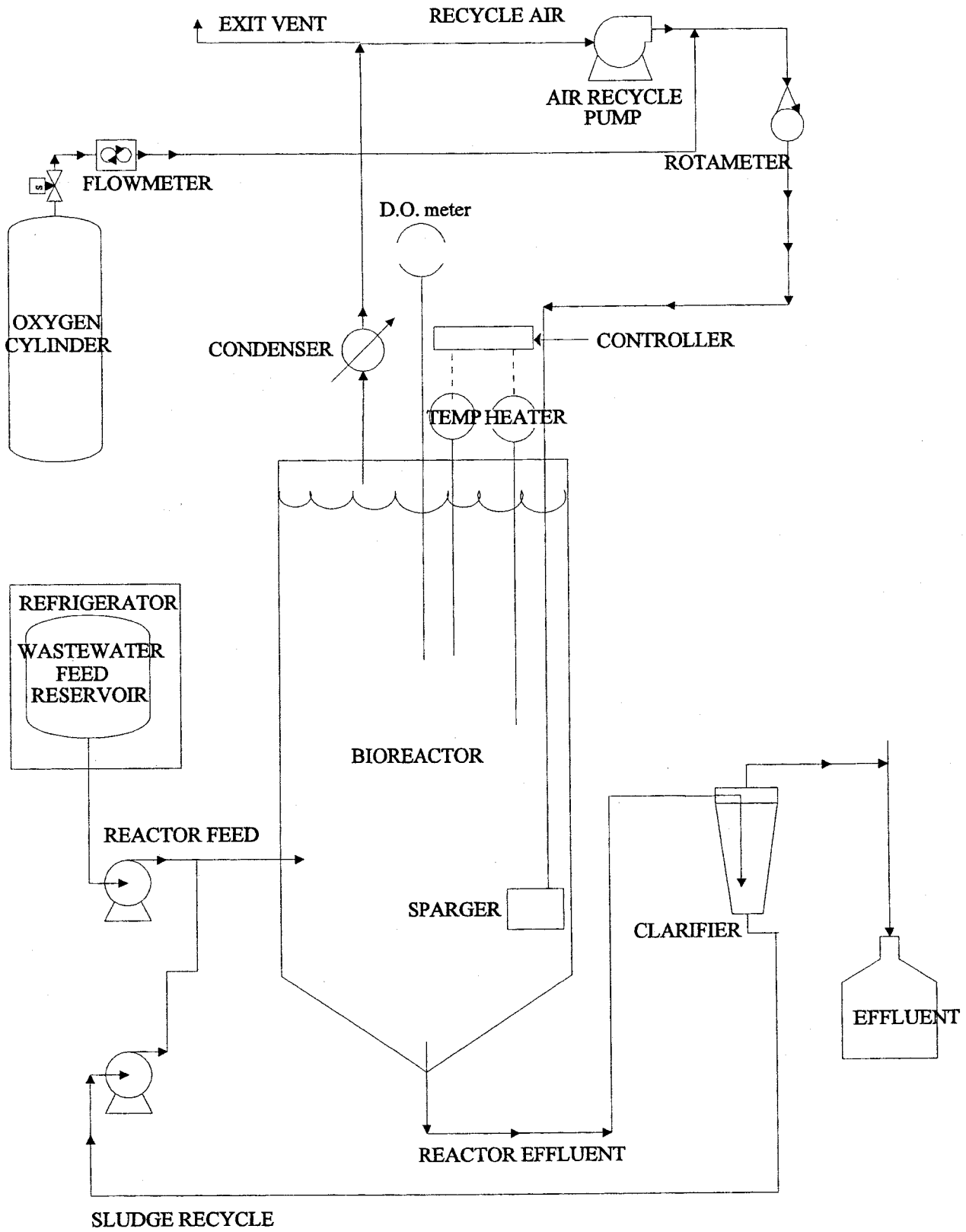

EPA METHOD 304A VENT BIOREACTOR SYSTEM

Method 304B: Determination of Biodegradation Rates of Organic Compounds (Scrubber Option)

1.0 Scope and Application

1.1 Applicability. This method is applicable for the determination of biodegradation rates of organic compounds in an activated sludge process. The test method is designed to evaluate the ability of an aerobic biological reaction system to degrade or destroy specific components in waste streams. The method may also be used to determine the effects of changes in wastewater composition on operation. The biodegradation rates determined by utilizing this method are not representative of a full-scale system. Full-scale systems embody biodegradation and air emissions in competing reactions. This method measures biodegradation in absence of air emissions. The rates measured by this method shall be used in conjunction with the procedures listed in appendix C of this part to calculate the fraction emitted to the air versus the fraction biodegraded.

2.0 Summary of Method

2.1 A self-contained benchtop bioreactor system is assembled in the laboratory. A sample of mixed liquor is added and the waste stream is then fed continuously. The benchtop bioreactor is operated under conditions nearly identical to the target full-scale activated sludge process, except that air emissions are not a factor. The benchtop bioreactor temperature, dissolved oxygen concentration, average residence time in the reactor, waste composition, biomass concentration, and biomass composition of the target full-scale process are the parameters which are duplicated in the laboratory system. Biomass shall be removed from the target full-scale activated sludge unit and held for no more than 4 hours prior to use in the benchtop bioreactor. If antifoaming agents are used in the full-scale system, they shall also be used in the benchtop bioreactor. The feed flowing into and the effluent exiting the benchtop bioreactor are analyzed to determine the biodegradation rates of the target compounds. The choice of analytical methodology for measuring the compounds of interest at the inlet and outlet to the benchtop bioreactor are left to the discretion of the source, except where validated methods are available.

3.0 Definitions. [Reserved]

4.0 Interferences. [Reserved]

5.0 Safety

5.1 If explosive gases are produced as a byproduct of biodegradation and could realistically pose a hazard, closely monitor headspace concentration of these gases to ensure laboratory safety. Placement of the benchtop bioreactor system inside a laboratory hood is recommended regardless of byproducts produced.

6.0 Equipment and Supplies

Note: Figure 304B–1 illustrates a typical laboratory apparatus used to measure biodegradation rates. While the following description refers to Figure 304B–1, the EPA recognizes that alternative reactor configurations, such as alternative reactor shapes and locations of probes and the feed inlet, will also meet the intent of this method. Ensure that the benchtop bioreactor system is self-contained and isolated from the atmosphere by leak-checking fittings, tubing, etc.

6.1 Benchtop Bioreactor. The biological reaction is conducted in a biological oxidation reactor of at least 6-liters capacity. The benchtop bioreactor is sealed and equipped with internal probes for controlling and monitoring dissolved oxygen and internal temperature. The top of the benchtop bioreactor is equipped for aerators, gas flow ports, and instrumentation (while ensuring that no leaks to the atmosphere exist around the fittings).

6.2 Aeration gas. Aeration gas is added to the benchtop bioreactor through three diffusers, which are glass tubes that extend to the bottom fifth of the reactor depth. A pure oxygen pressurized cylinder is recommended in order to maintain the specified oxygen concentration. Install a blower (*e.g.,* Diaphragm Type, 15 SCFH capacity) to blow the aeration gas into the benchtop bioreactor diffusers. Measure the aeration gas flow rate with a rotameter (*e.g.,* 0–15 SCFH recommended). The aeration gas will rise through the benchtop bioreactor, dissolving oxygen into the mixture in the process. The aeration gas must provide sufficient agitation to keep the solids in suspension. Provide an exit for the aeration gas from the top flange of the benchtop bioreactor through a water-cooled (*e.g.,* Allihn-type) vertical condenser. Install the condenser through a gas-tight fitting in the benchtop bioreactor closure. Design the system so that at least 10 percent of the gas flows through an alkaline scrubber containing 175 mL of 45 percent by weight solution of potassium hydroxide (KOH) and 5 drops of 0.2 percent alizarin yellow dye. Route the balance of the gas through an adjustable scrubber bypass. Route all of the gas through a 1-L knock-out flask to remove entrained moisture and then to the intake of the blower. The blower recirculates the gas to the benchtop bioreactor.

6.3 Wastewater Feed. Supply the wastewater feed to the benchtop bioreactor in a collapsible low-density polyethylene container or collapsible liner in a container (*e.g.,* 20 L) equipped with a spigot cap (collapsible containers or liners of other material may be required due to the permeability of some volatile compounds through polyethylene). Obtain the wastewater feed by sampling the wastewater feed in the target process. A representative sample of wastewater shall be obtained from the piping leading to the aeration tank. This sample may be obtained from existing sampling valves at the discharge of the wastewater feed pump, or collected from a pipe discharging to the aeration tank, or by pumping from a well-mixed equalization tank upstream from the aeration tank. Alternatively, wastewater can be pumped continuously to the laboratory apparatus from a bleed stream taken from the equalization tank of the full-scale treatment system.

6.3.1 Refrigeration System. Keep the wastewater feed cool by ice or by refrigeration to 4°C. If using a bleed stream from the equalization tank, refrigeration is not required if the residence time in the bleed stream is less than five minutes.

6.3.2 Wastewater Feed Pump. The wastewater is pumped from the refrigerated container using a variable-speed peristaltic pump drive equipped with a peristaltic pump head. Add the feed solution to the benchtop bioreactor through a fitting on the top flange. Determine the rate of feed addition to provide a retention time in the benchtop bioreactor that is numerically equivalent to the retention time in the target full-scale system. The wastewater shall be fed at a rate sufficient to achieve 90 to 100 percent of the target full-scale system residence time.

6.3.3 Treated wastewater feed. The benchtop bioreactor effluent exits at the bottom of the reactor through a tube and proceeds to the clarifier.

6.4 Clarifier. The effluent flows to a separate closed clarifier that allows separation of biomass and effluent (*e.g.,* 2-liter pear-shaped glass separatory funnel, modified by removing the stopcock and adding a 25-mm OD glass tube at the bottom). Benchtop bioreactor effluent enters the clarifier through a tube inserted to a depth of 0.08 m (3 in.)

through a stopper at the top of the clarifier. System effluent flows from a tube inserted through the stopper at the top of the clarifier to a drain (or sample bottle when sampling). The underflow from the clarifier leaves from the glass tube at the bottom of the clarifier. Flexible tubing connects this fitting to the sludge recycle pump. This pump is coupled to a variable speed pump drive. The discharge from this pump is returned through a tube inserted in a port on the side of the benchtop bioreactor. An additional port is provided near the bottom of the benchtop bioreactor for sampling the reactor contents. The mixed liquor from the benchtop bioreactor flows into the center of the clarifier. The clarified system effluent separates from the biomass and flows through an exit near the top of the clarifier. There shall be no headspace in the clarifier.

6.5 Temperature Control Apparatus. Capable of maintaining the system at a temperature equal to the temperature of the full-scale system. The average temperature should be maintained within ±2 °C of the set point.

6.5.1 Temperature Monitoring Device. A resistance type temperature probe or a thermocouple connected to a temperature readout with a resolution of 0.1°C or better.

6.5.2 Benchtop Bioreactor Heater. The heater is connected to the temperature control device.

6.6 Oxygen Control System. Maintain the dissolved oxygen concentration at the levels present in the full-scale system. Target full-scale activated sludge systems with dissolved oxygen concentration below 2 mg/L are required to maintain the dissolved oxygen concentration in the benchtop bioreactor within 0.5 mg/L of the target dissolved oxygen level. Target full-scale activated sludge systems with dissolved oxygen concentration above 2 mg/L are required to maintain the dissolved oxygen concentration in the benchtop bioreactor within 1.5 mg/L of the target dissolved oxygen concentration; however, for target full-scale activated sludge systems with dissolved oxygen concentrations above 2 mg/L, the dissolved oxygen concentration in the benchtop bioreactor may not drop below 1.5 mg/L. If the benchtop bioreactor is outside the control range, the dissolved oxygen is noted and the reactor operation is adjusted.

6.6.1 Dissolved Oxygen Monitor. Dissolved oxygen is monitored with a polarographic probe (gas permeable membrane) connected to a dissolved oxygen meter (*e.g.,* 0 to 15 mg/L, 0 to 50°C).

6.6.2 Benchtop Bioreactor Pressure Monitor. The benchtop bioreactor pressure is monitored through a port in the top flange of the reactor. This is connected to a gauge control with a span of 13-cm water vacuum to 13-cm water pressure or better. A relay is activated when the vacuum exceeds an adjustable setpoint which opens a solenoid valve (normally closed), admitting oxygen to the system. The vacuum setpoint controlling oxygen addition to the system shall be set at approximately 2.5 ± 0.5 cm water and maintained at this setting except during brief periods when the dissolved oxygen concentration is adjusted.

6.7 Connecting Tubing. All connecting tubing shall be Teflon or equivalent in impermeability. The only exception to this specification is the tubing directly inside the pump head of the wastewater feed pump, which may be Viton, Silicone or another type of flexible tubing.

Note: Mention of trade names or products does not constitute endorsement by the U.S. Environmental Protection Agency.

7.0. Reagents and Standards

7.1 Wastewater. Obtain a representative sample of wastewater at the inlet to the full-scale treatment plant if there is an existing full-scale treatment plant (See Section 6.3). If there is no existing full-scale treatment plant, obtain the wastewater sample as close to the point of determination as possible. Collect the sample by pumping the wastewater into the 20-L collapsible container. The loss of volatiles shall be minimized from the wastewater by collapsing the container before filling, by minimizing the time of filling, and by avoiding a headspace in the container after filling. If the wastewater requires the addition of nutrients to support the biomass growth and maintain biomass characteristics, those nutrients are added and mixed with the container contents after the container is filled.

7.2 Biomass. Obtain the biomass or activated sludge used for rate constant determination in the bench-scale process from the existing full-scale process or from a representative biomass culture (*e.g.*, biomass that has been developed for a future full-scale process). This biomass is preferentially obtained from a thickened acclimated mixed liquor sample. Collect the sample either by bailing from the mixed liquor in the aeration tank with a weighted container, or by collecting aeration tank effluent at the effluent overflow weir. Transport the sample to the laboratory within no more than 4 hours of collection. Maintain the biomass concentration in the benchtop bioreactor at the level of the target full-scale system +10 percent throughout the sampling period of the test method.

8.0 Sample Collection, Preservation, Storage, and Transport

8.1 Benchtop Bioreactor Operation. Charge the mixed liquor to the benchtop bioreactor, minimizing headspace over the liquid surface to minimize entrainment of mixed liquor in the circulating gas. Fasten the benchtop bioreactor headplate to the reactor over the liquid surface. Maintain the temperature of the contents of the benchtop bioreactor system at the temperature of the target full-scale system, ±2 °C, throughout the testing period. Monitor and record the temperature of the reactor contents at least to the nearest 0.1°C.

8.1.1 Wastewater Storage. Collect the wastewater sample in the 20-L collapsible container. Store the container at 4 °C throughout the testing period. Connect the container to the benchtop bioreactor feed pump.

8.1.2 Wastewater Flow Rate.

8.1.2.1 The hydraulic residence time of the aeration tank is calculated as the ratio of the volume of the tank (L) to the flow rate (L/min). At the beginning of a test, the container shall be connected to the feed pump and solution shall be pumped to the benchtop bioreactor at the required flow rate to achieve the calculated hydraulic residence time of wastewater in the aeration tank.

$$Q_{test} = Q_{fs} \frac{L}{V_{fs}} \qquad \text{Eq. 304B-1}$$

Where:

Q_{test} = wastewater flow rate (L/min)

Q_{fs} = average flow rate of full-scale process (L/min)

V_{fs} = volume of full-scale aeration tank (L)

8.1.2.2 The target flow rate in the test apparatus is the same as the flow rate in the target full-scale process multiplied by the ratio of benchtop bioreactor volume (*e.g.*, 6 L) to the volume of the full-scale aeration tank. The hydraulic residence time shall be maintained at 90 to 100 percent of the residence time maintained in the target full-scale unit. A nominal flow rate is set on the pump based on a pump calibration. Changes in the elasticity of the tubing in the pump head and the accumulation of material in the tubing affect this calibration. The nominal pumping rate shall be changed as necessary based on volumetric flow measurements. Discharge the benchtop bioreactor effluent to a wastewater storage, treatment, or disposal facility, except during sampling or flow measurement periods.

8.1.3 Sludge Recycle Rate. Set the sludge recycle rate at a rate sufficient to prevent accumulation in the bottom of the clarifier. Set the air circulation rate sufficient to maintain the biomass in suspension.

8.1.4 Benchtop Bioreactor Operation and Maintenance. Temperature, dissolved oxygen concentration, flow rate, and air circulation rate shall be measured and recorded three times throughout each day of testing. If other parameters (such as pH) are measured and maintained in the target full-scale unit, these parameters shall, where appropriate, be monitored and maintained to full-scale specifications in the benchtop bioreactor. At the beginning of each sampling period (section 8.2), sample the benchtop bioreactor contents for suspended solids analysis. Take this sample by loosening a clamp on a length of tubing attached to the lower side port. Determine the suspended solids gravimetrically by the Gooch crucible/glass fiber filter method for total suspended solids, in accordance with Standard Methods[3] or equivalent. When necessary, sludge shall be wasted from the lower side port of the benchtop bioreactor, and the volume that is wasted shall be replaced with an equal volume of the benchtop bioreactor effluent. Add thickened activated sludge mixed liquor as necessary to the benchtop bioreactor to increase the suspended solids concentration to the desired level. Pump this mixed liquor to the benchtop bioreactor through the upper side port (Item 24 in Figure 304B–1). Change the membrane on the dissolved oxygen probe before starting the test. Calibrate the oxygen probe immediately before the start of the test and each time the membrane is changed. The scrubber solution shall be replaced each weekday with 175 mL 45 percent W/W KOH solution to which five drops of 0.2 percent alizarin yellow indicator in water have been added. The potassium hydroxide solution in the alkaline scrubber shall be changed if the alizarin yellow dye color changes.

8.1.5 Inspection and Correction Procedures. If the feed line tubing becomes clogged, replace with new tubing. If the feed flow rate is not within 5 percent of target flow any time the flow rate is measured, reset pump or check the flow measuring device and measure flow rate again until target flow rate is achieved.

8.2 Test Sampling. At least two and one half hydraulic residence times after the system has reached the targeted specifications shall be permitted to elapse before the first sample is taken. Effluent samples of the clarifier discharge (Item 20 in Figure 304B–1) and the influent wastewater feed are collected in 40-mL septum vials to which two drops of 1:10 hydrochloric acid (HCl) in water have been added. Sample the clarifier discharge directly from the drain line. These samples will be composed of the entire flow from the system for a period of several minutes. Feed samples shall be taken from the feed pump suction line after temporarily stopping the benchtop bioreactor feed, removing a connector, and squeezing the collapsible feed container. Store both influent and effluent samples at 4°C immediately after collection and analyze within 8 hours of collection.

8.2.1 Frequency of Sampling. During the test, sample and analyze the wastewater feed and the clarifier effluent at least six times. The sampling intervals shall be separated by at least 8 hours. During any individual sampling interval, sample the wastewater feed simultaneously with or immediately after the effluent sample. Calculate the RSD of the amount removed (*i.e.,* effluent concentration—wastewater feed concentration). The RSD values shall be <15 percent. If an RSD value is >15 percent, continue sampling and analyzing influent and effluent sets of samples until the RSD values are within specifications.

8.2.2 Sampling After Exposure of System to Atmosphere. If, after starting sampling procedures, the benchtop bioreactor system is exposed to the atmosphere (due to leaks, maintenance, etc.), allow at least one hydraulic residence time to elapse before resuming sampling.

9.0 Quality Control

9.1 Dissolved Oxygen. Fluctuation in dissolved oxygen concentration may occur for numerous reasons, including undetected gas leaks, increases and decreases in mixed liquor suspended solids resulting from cell growth and solids loss in the effluent stream, changes in diffuser performance, cycling of effluent flow rate, and overcorrection due to faulty or sluggish dissolved oxygen probe response. Control the dissolved oxygen concentration in the benchtop bioreactor by changing the proportion of oxygen in the circulating aeration gas. Should the dissolved oxygen concentration drift below the designated experimental condition, bleed a small amount of aeration gas from the system on the pressure side (*i.e.,* immediately upstream of one of the diffusers). This will create a vacuum in the system, triggering the pressure sensitive relay to open the solenoid valve and admit oxygen to the system. Should the dissolved oxygen concentration drift above the designated experimental condition, slow or stop the oxygen input to the system until the dissolved oxygen concentration approaches the correct level.

9.2 Sludge Wasting.

9.2.1 Determine the suspended solids concentration (section 8.1.4) at the beginning of a test, and once per day thereafter during the test. If the test is completed within a two day period, determine the suspended solids concentration after the final sample set is taken. If the suspended solids concentration exceeds the specified concentration, remove a fraction of the sludge from the benchtop bioreactor. The required volume of mixed liquor to remove is determined as follows:

$$V_w = V_r\left(\frac{S_m - S_s}{S_m}\right) \qquad \text{Eq. 304B-2}$$

Where:

V_w is the wasted volume (Liters),
V_r is the volume of the benchtop bioreactor (Liters),
S_m is the measured solids (g/L), and
S_s is the specified solids (g/L).

9.2.2 Remove the mixed liquor from the benchtop bioreactor by loosening a clamp on the mixed liquor sampling tube and allowing the required volume to drain to a graduated flask. Clamp the tube when the correct volume has been wasted. Replace the volume of the liquid wasted by pouring the same volume of effluent back into the benchtop bioreactor. Dispose of the waste sludge properly.

9.3 Sludge Makeup. In the event that the suspended solids concentration is lower than the specifications, add makeup sludge back into the benchtop bioreactor. Determine the amount of sludge added by the following equation:

$$V_w = V_r\left(\frac{S_s - S_m}{S_w}\right) \qquad \text{Eq. 304B-3}$$

Where:

V_w is the volume of sludge to add (Liters),
V_r is the volume of the benchtop bioreactor (Liters),
S_w is the solids in the makeup sludge (g/L),
S_m is the measured solids (g/L), and
S_s is the specified solids (g/L).

10.0 Calibration and Standardizations

10.1 Wastewater Pump Calibration. Determine the wastewater flow rate by collecting the system effluent for a time period of at least one hour, and measuring the volume with a graduated cylinder. Record the collection time period and volume collected. Determine flow rate. Adjust the pump speed to deliver the specified flow rate.

10.2 Calibration Standards. Prepare calibration standards from pure certified standards in an aqueous medium. Prepare and analyze three concentrations of calibration standards for each target component (or for a mixture of components) in triplicate daily throughout the analyses of the test samples. At each concentration level, a single calibration shall be within 5 percent of the average of the three calibration results. The low and medium calibration standards shall bracket the expected concentration of the effluent (treated) wastewater. The medium and high standards shall bracket the expected influent concentration.

11.0 Analytical Test Procedures

11.1 Analysis. If the identity of the compounds of interest in the wastewater is not known, a representative sample of the wastewater shall be analyzed in order to identify all of the compounds of interest present. A gas chromatography/mass spectrometry screening method is recommended.

11.1.1 After identifying the compounds of interest in the wastewater, develop and/or use one or more analytical technique capable of measuring each of those compounds (more than one analytical technique may be required, depending on the characteristics of the wastewater). Method 18, found in appendix A of 40 CFR 60, may be used as a guideline in developing the analytical technique. Purge and trap techniques may be used for analysis providing the target components are sufficiently volatile to make this technique appropriate. The limit of quantitation for each compound shall be determined.[1] If the effluent concentration of any target compound is below the limit of quantitation determined for that compound, the operation of the Method 304 unit may be altered to attempt to increase the effluent concentration above the limit of quantitation. Modifications to the method shall be approved prior to the test. The request should be addressed to Method 304 contact, Emissions Measurement Center, Mail Drop 19, U.S. Environmental Protection Agency, Research Triangle Park, NC 27711.

12.0 Data Analysis and Calculations

12.1 Nomenclature. The following symbols are used in the calculations.

C_i = Average inlet feed concentration for a compound of interest, as analyzed (mg/L)
C_o = Average outlet (effluent) concentration for a compound of interest, as analyzed (mg/L)
X = Biomass concentration, mixed liquor suspended solids (g/L)
t = Hydraulic residence time in the benchtop bioreactor (hours)
V = Volume of the benchtop bioreactor (L)
Q = Flow rate of wastewater into the benchtop bioreactor, average (L/hour)

12.2 Residence Time. The hydraulic residence time of the benchtop bioreactor is equal to the ratio of the volume of the benchtop bioreactor (L) to the flow rate (L/h)

$$t = \frac{V}{Q} \qquad \text{Eq. 304B-4}$$

12.3 Rate of Biodegradation. Calculate the rate of biodegradation for each component with the following equation:

$$\text{Rate}\left(\frac{mg}{L-h}\right) = \frac{C_i - C_o}{t} \qquad \text{Eq. 304B-5}$$

12.4 First-Order Biorate Constant. Calculate the first-order biorate constant (K1) for each component with the following equation:

$$K1\left(\frac{L}{g-h}\right)=\frac{C_i-C_o}{tC_oX} \qquad \text{Eq. 304B-6}$$

12.5 Relative Standard Deviation (RSD). Determine the standard deviation of both the influent and effluent sample concentrations (S) using the following equation:

$$RSD=\frac{100}{\overline{S}}\left(\sum_{i=1}^{n}\frac{\left(S_i-\overline{S}\right)^2}{(n-1)}\right)^{1/2} \qquad \text{Eq. 304B-7}$$

12.6 Determination of Percent Air Emissions and Percent Biodegraded. Use the results from this test method and follow the applicable procedures in appendix C of 40 CFR Part 63, entitled, ''Determination of the Fraction Biodegraded (F_{bio}) in a Biological Treatment Unit'' to determine F_{bio}.

13.0 Method Performance. [Reserved]

14.0 Pollution Prevention. [Reserved]

15.0 Waste Management. [Reserved]

16.0 References

1. ''Guidelines for data acquisition and data quality evaluation in Environmental Chemistry'', Daniel MacDoughal, Analytical Chemistry, Volume 52, p. 2242, 1980.

2. Test Method 18, 40 CFR 60, Appendix A.

3. Standard Methods for the Examination of Water and Wastewater, 16th Edition, Method 209C, Total Suspended Solids Dried at 103–105°C, APHA, 1985.

4. Water—7, Hazardous Waste Treatment, Storage, and Disposal Facilities (TSDF)—Air Emission Models, U.S. Environmental Protection Agency, EPA–450/3–87–026, Review Draft, November 1989.

5. Chemdat7, Hazardous Waste Treatment, Storage, and Disposal Facilities (TSDF)—Air Emission Models, U.S. Environmental Protection Agency, EPA–450/3–87–026, Review Draft, November 1989.

BILLING CODE 6560–50–P

17.0 Tables, Diagrams, Flowcharts, and Validation Data

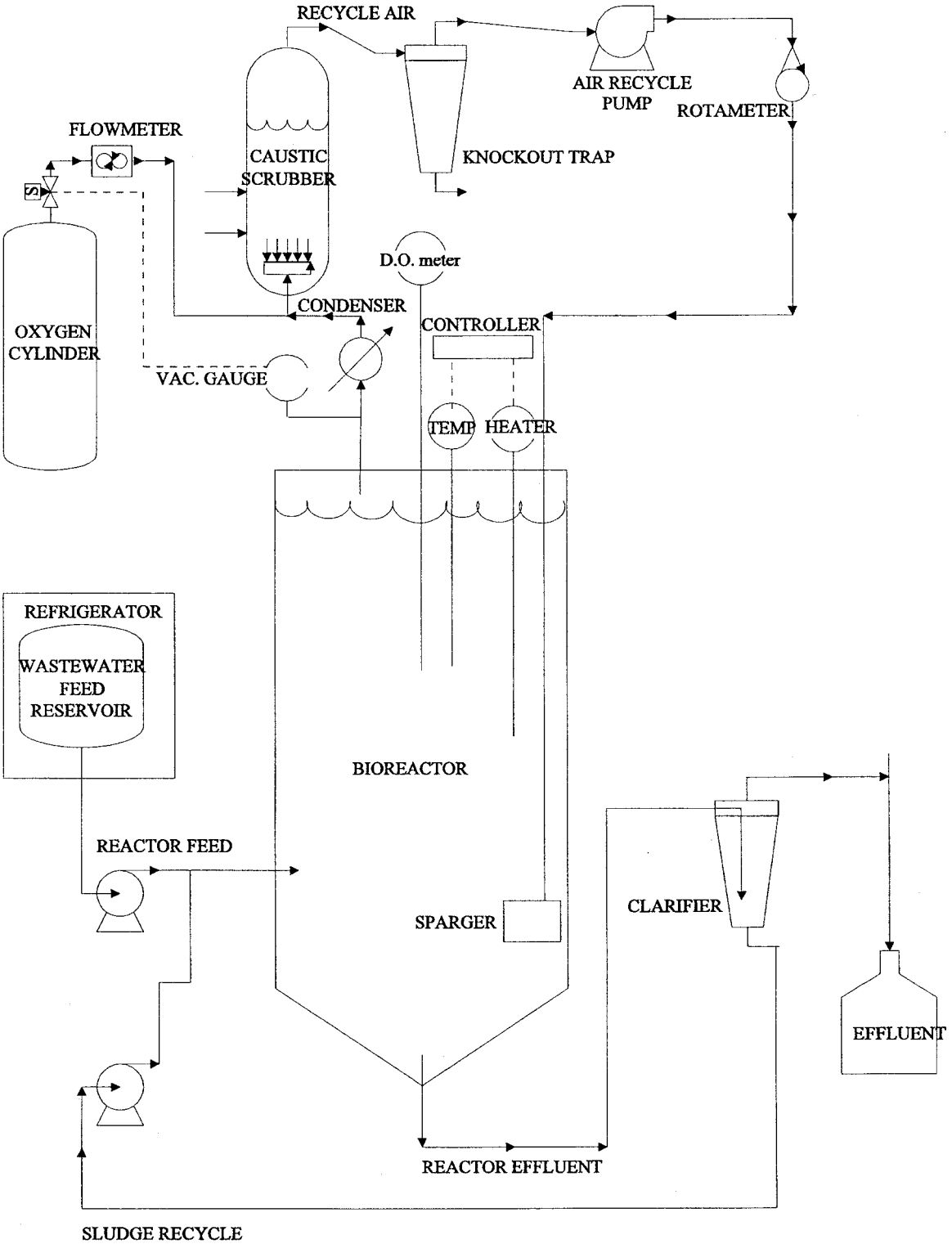

EPA METHOD 304B BIOREACTOR SYSTEM

BILLING CODE 6560–50–C

Method 305: Measurement of Emission Potential of Individual Volatile Organic Compounds in Waste

Note: This method does not include all of the specifications (*e.g.,* equipment and supplies) and procedures (*e.g.,* sampling and analytical) essential to its performance. Some material is incorporated by reference from other methods in 40 CFR Part 60, Appendix A. Therefore, to obtain reliable results, persons using this method should have a thorough knowledge of at least Method 25D.

1.0 Scope and Application

1.1 Analyte. Volatile Organics. No CAS No. assigned.

1.2 Applicability. This procedure is used to determine the emission potential of individual volatile organics (VOs) in waste.

1.3 Data Quality Objectives. Adherence to the requirements of this method will enhance the quality of the data obtained from air pollutant sampling methods.

2.0 Summary of Method

2.1 The heated purge conditions established by Method 25D (40 CFR Part 60, Appendix A) are used to remove VOs from a 10 gram sample of waste suspended in a 50/50 solution of polyethylene glycol (PEG) and water. The purged VOs are quantified by using the sample collection and analytical techniques (*e.g.* gas chromatography) appropriate for the VOs present in the waste. The recovery efficiency of the sample collection and analytical technique is determined for each waste matrix. A correction factor is determined for each compound (if acceptable recovery criteria requirements are met of 70 to 130 percent recovery for every target compound), and the measured waste concentration is corrected with the correction factor for each compound. A minimum of three replicate waste samples shall be analyzed.

3.0 Definitions [Reserved]

4.0 Interferences [Reserved]

5.0 Safety

5.1 Disclaimer. This method may involve hazardous materials, operations, and equipment. This test method may not address all of the safety problems associated with its use. It is the responsibility of the user of this test method to establish appropriate safety and health practices and to determine the applicability of regulatory limitations prior to performing this test method.

6.0 Equipment and Supplies

6.1 Method 25D Purge Apparatus.

6.1.1 Purge Chamber. The purge chamber shall accommodate the 10 gram sample of waste suspended in a matrix of 50 mL of PEG and 50 mL of deionized, hydrocarbon-free water. Three fittings are used on the glass chamber top. Two #7 Ace-threads are used for the purge gas inlet and outlet connections. A #50 Ace-thread is used to connect the top of the chamber to the base (see Figure 305–1). The base of the chamber has a side-arm equipped with a #22 Sovirel fitting to allow for easy sample introductions into the chamber. The dimensions of the chamber are shown in Figure 305–1.

6.1.2 Flow Distribution Device (FDD). The FDD enhances the gas-to-liquid contact for improved purging efficiency. The FDD is a 6 mm OD (0.2 in) by 30 cm (12 in) long glass tube equipped with four arm bubblers as shown in Figure 305–1. Each arm shall have an opening of 1 mm (0.04 in) in diameter.

6.1.3 Coalescing Filter. The coalescing filter serves to discourage aerosol formation of sample gas once it leaves the purge chamber. The glass filter has a fritted disc mounted 10 cm (3.9 in) from the bottom. Two #7 Ace-threads are used for the inlet and outlet connections. The dimensions of the chamber are shown in Figure 305–2.

6.1.4 Oven. A forced convection airflow oven capable of maintaining the purge chamber and coalescing filter at 75 ± 2°C (167 ± 3.6°F).

6.1.5 Toggle Valve. An on/off valve constructed from brass or stainless steel rated to 100 psig. This valve is placed in line between the purge nitrogen source and the flow controller.

6.1.6 Flow Controller. High-quality stainless steel flow controller capable of restricting a flow of nitrogen to 6 ± 0.06 L/min (0.2 ± 0.002 ft^3/min) at 40 psig.

6.1.7 Polyethylene Glycol Cleaning System.

6.1.7.1 Round-Bottom Flask. One liter, three-neck glass round-bottom flask for cleaning PEG. Standard taper 24/40 joints are mounted on each neck.

6.1.7.2 Heating Mantle. Capable of heating contents of the 1-L flask to 120 °C (248 °F).

6.1.7.3 Nitrogen Bubbler. Teflon® or glass tube, 0.25 in OD (6.35 mm).

6.1.7.4 Temperature Sensor. Partial immersion glass thermometer.

6.1.7.5 Hose Adapter. Glass with 24/40 standard tapered joint.

6.2 Volatile Organic Recovery System.

6.2.1 Splitter Valve (Optional). Stainless steel cross-pattern valve capable of splitting nominal flow rates from the purge flow of 6 L/min (0.2 ft^3/min). The valve shall be maintained at 75 + 2°C (167 ± 3.6°F) in the heated zone and shall be placed downstream of the coalescing filter. It is recommended that 0.125 in OD (3.175 mm) tubing be used to direct the split vent flow from the heated zone. The back pressure caused by the 0.125 in OD (3.175 mm) tubing is critical for maintaining proper split valve operation.

Note: The splitter valve design is optional; it may be used in cases where the concentration of a pollutant would saturate the adsorbents.

6.2.2 Injection Port. Stainless steel 1/4 in OD (6.35 mm) compression fitting tee with a 6 mm (0.2 in) septum fixed on the top port. The injection port is the point of entry for the recovery study solution. If using a gaseous standard to determine recovery efficiency, connect the gaseous standard to the injection port of the tee.

6.2.3 Knockout Trap (Optional but Recommended). A 25 mL capacity glass reservoir body with a full-stem impinger (to avoid leaks, a modified midget glass impinger with a screw cap and ball/socket clamps on the inlet and outlet is recommended). The empty impinger is placed in an ice water bath between the injection port and the sorbent cartridge. Its purpose is to reduce the water content of the purge gas (saturated at 75 °C (167 °F)) before the sorbent cartridge.

6.2.4 Insulated Ice Bath. A 350 mL dewar or other type of insulated bath is used to maintain ice water around the knockout trap.

6.2.5 Sorbent Cartridges. Commercially available glass or stainless steel cartridge packed with one or more appropriate sorbents. The amount of adsorbent packed in the cartridge depends on the breakthrough volume of the test compounds but is limited by back pressure caused by the packing (not to exceed 7 psig). More than one sorbent cartridge placed in series may be necessary depending upon the mixture of the measured components.

6.2.6 Volumetric Glassware. Type A glass 10 mL volumetric flasks for measuring a final volume from the water catch in the knockout trap.

6.2.7 Thermal Desorption Unit. A clam-shell type oven, used for the desorption of direct thermal desorption sorbent tubes. The oven shall be capable of increasing the temperature of the desorption tubes rapidly to recommended desorption temperature.

6.2.8 Ultrasonic Bath. Small bath used to agitate sorbent material and desorption solvent. Ice water shall be used in the bath because of heat transfer caused by operation of the bath.

6.2.9 Desorption Vials. Four-dram (15 mL) capacity borosilicate glass vials with Teflon-lined caps.

6.3 Analytical System. A gas chromatograph (GC) is commonly used to separate and quantify compounds from the sample collection and recovery procedure. Method 18 (40 CFR Part 60, Appendix A) may be used as a guideline for determining the appropriate GC column and GC detector based on the test compounds to be determined. Other types of analytical instrumentation may be used (HPLC) in lieu of GC systems as long as the recovery efficiency criteria of this method are met.

6.3.1 Gas Chromatograph (GC). The GC shall be equipped with a constant-temperature liquid injection port or a heated sampling loop/valve system, as appropriate. The GC oven shall be temperature-programmable over the useful range of the GC column. The choice of detectors is based on the test compounds to be determined.

6.3.2 GC Column. Select the appropriate GC column based on (1) literature review or previous experience, (2) polarity of the analytes, (3) capacity of the column, or (4) resolving power (*e.g.,* length, diameter, film thickness) required.

6.3.3 Data System. A programmable electronic integrator for recording, analyzing, and storing the signal generated by the detector.

7.0 Reagents and Standards

7.1 Method 25D Purge Apparatus.

7.1.1 Polyethylene Glycol (PEG). Ninety-eight percent pure organic polymer with an average molecular weight of 400 g/mol. Volatile organics are removed from the PEG prior to use by heating to 120 ± 5°C (248 ± 9°F) and purging with pure nitrogen at 1 L/min (0.04 ft^3/min) for 2 hours. After purging and heating, the PEG is maintained at room temperature under a nitrogen purge maintained at 1 L/min (0.04 ft^3/min) until used. A typical apparatus used to clean the PEG is shown in Figure 305–3.

7.1.2 Water. Organic-free deionized water is required.

7.1.3 Nitrogen. High-purity nitrogen (less than 0.5 ppm total hydrocarbons) is used to remove test compounds from the purge matrix. The source of nitrogen shall be regulated continuously to 40 psig before the on/off toggle valve.

7.2 Volatile Organic Recovery System.

7.2.1 Water. Organic-free deionized water is required.

7.2.2 Desorption Solvent (when used). Appropriate high-purity (99.99 percent) solvent for desorption shall be used. Analysis shall be performed (utilizing the same analytical technique as that used in the analysis of the waste samples) on each lot to determine purity.

7.3 Analytical System. The gases required for GC operation shall be of the highest obtainable purity (hydrocarbon free). Consult the operating manual for recommended settings.

8.0 Sample Collection, Preservation, Storage, and Transport

8.1 Assemble the glassware and associated fittings (see Figures 305–3 and 305–4, as appropriate) and leak-check the system (approximately 7 psig is the target pressure). After an initial leak check, mark the pressure gauge and use the initial checkpoint to monitor for leaks throughout subsequent analyses. If the pressure in the system drops below the target pressure at any time during analysis, that analysis shall be considered invalid.

8.2 Recovery Efficiency Determination. Determine the individual recovery efficiency (RE) for each of the target compounds in duplicate before the waste samples are analyzed. To determine the RE, generate a water blank (Section 11.1) and use the injection port to introduce a known volume of spike solution (or certified gaseous standard) containing all of the target compounds at the levels expected in the waste sample. Introduce the spike solution immediately after the nitrogen purge has been started (Section 8.3.2). Follow the procedures outlined in Section 8.3.3. Analyze the recovery efficiency samples using the techniques described in Section 11.2. Determine the recovery efficiency (Equation 305–1, Section 12.2) by comparing the amount of compound recovered to the theoretical amount spiked. Determine the RE twice for each compound; the relative standard deviation, (RSD) shall be ≤ 10 percent for each compound. If the RSD for any compound is not ≤ 10 percent, modify the sampling/analytical procedure and complete an RE study in duplicate, or continue determining RE until the RSD meets the acceptable criteria. The average RE shall be 0.70 ≤ RE ≤ 1.30 for each compound. If the average RE does not meet these criteria, an alternative sample collection and/or analysis technique shall be developed and the recovery efficiency determination shall be repeated for that compound until the criteria are met for every target compound. Example modifications of the sampling/analytical system include changing the adsorbent material, changing the desorption solvent, utilizing direct thermal desorption of test compounds from the sorbent tubes, utilizing another analytical technique.

8.3 Sample Collection and Recovery.

8.3.1 The sample collection procedure in Method 25D shall be used to collect (into a preweighed vial) 10 g of waste into PEG, cool, and ship to the laboratory. Remove the sample container from the cooler and wipe the exterior to remove any ice or water. Weigh the container and sample to the nearest 0.01 g and record the weight. Pour the sample from the container into the purge flask. Rinse the sample container three times with approximately 6 mL of PEG (or the volume needed to total 50 mL of PEG in the purge flask), transferring the rinses to the purge flask. Add 50 mL of organic-free deionized water to the purge flask. Cap the purge flask tightly in between each rinse and after adding all the components into the flask.

8.3.2 Allow the oven to equilibrate to 75 ± 2 °C (167 ± 3.6 °F). Begin the sample recovery process by turning the toggle valve on, thus allowing a 6 L/min flow of pure nitrogen through the purge chamber.

8.3.3 Stop the purge after 30 min. Immediately remove the sorbent tube(s) from the apparatus and cap both ends. Remove the knockout trap and transfer the water catch to a 10 mL volumetric flask. Rinse the trap with organic-free deionized water and transfer the rinse to the volumetric flask. Dilute to the 10 mL mark with water. Transfer the water sample to a sample vial and store at 4 °C (39.2 °F) with zero headspace. The analysis of the contents of the water knockout trap is optional for this method. If the target compounds are water soluble, analysis of the water is recommended; meeting the recovery efficiency criteria in these cases would be difficult without adding the amount captured in the knockout trap.

9.0 Quality Control

9.1 Miscellaneous Quality Control Measures.

Section	Quality control measure	Effect
8.1	Sampling equipment leak-check	Ensures accurate measurement of sample volume.
8.2	Recovery efficiency (RE) determination for each measured compound..	Ensures accurate sample collection and analysis.
8.3	Calibration of analytical instrument with at least 3 calibration standards..	Ensures linear measurement of compounds over the instrument span.

10.0 Calibration and Standardization

10.1 The analytical instrument shall be calibrated with a minimum of three levels of standards for each compound whose concentrations bracket the concentration of test compounds from the sorbent tubes. Liquid calibration standards shall be used for calibration in the analysis of the solvent extracts. The liquid calibration standards shall be prepared in the desorption solvent matrix. The calibration standards may be prepared and injected individually or as a mixture. If thermal desorption and focusing (onto another sorbent or cryogen focusing) are used, a certified gaseous mixture or a series of gaseous standards shall be used for calibration of the instrument. The gaseous standards shall be focused and analyzed in the same manner as the samples.

10.2 The analytical system shall be certified free from contaminants before a calibration is performed (see Section 11.1). The calibration standards are used to determine the linearity of the analytical system. Perform an initial calibration and linearity check by analyzing the three calibration standards for each target compound in triplicate starting with the lowest level and continuing to the highest level. If the triplicate analyses do not agree within 5 percent of their average, additional analyses will be needed until the 5 percent criteria is met. Calculate the response factor (Equation 305–3, Section 12.4) from the average area counts of the injections for each concentration level. Average the response factors of the standards for each compound. The linearity of the detector is acceptable if the response factor of each compound at a particular concentration is within 10 percent of the overall mean response factor for that compound. Analyze daily a mid-level calibration standard in duplicate and calculate a new response factor. Compare the daily response factor average to the average response factor calculated for the mid-level calibration during the initial linearity check; repeat the three-level calibration procedure if the daily average response factor differs from the initial linearity check mid-level response factor by more than 10 percent. Otherwise, proceed with the sample analysis.

11.0 Analytical Procedure

11.1 Water Blank Analysis. A water blank shall be analyzed daily to determine the cleanliness of the purge and recovery system. A water blank is generated by adding 60 mL of organic-free deionized water to 50 mL of PEG in the purge chamber. Treat the blank as described in Sections 8.3.2 and 8.3.3. The purpose of the water blank is to insure that no contaminants exist in the sampling and analytical apparatus which would interfere with the quantitation of the target compounds. If contaminants are present, locate the source of contamination, remove it, and repeat the water blank analysis.

11.2 Sample Analysis. Sample analysis in the context of this method refers to techniques to remove the target compounds from the sorbent tubes, separate them using a chromatography technique, and quantify them with an appropriate detector. Two types of sample extraction techniques typically used for sorbents include solvent desorption or direct thermal desorption of test compounds to a secondary focusing unit (either sorbent or cryogen based). The test compounds are then typically transferred to a GC system for analysis. Other analytical systems may be used (e.g., HPLC) in lieu of GC systems as long as the recovery efficiency criteria of this method are met.

11.2.1 Recover the test compounds from the sorbent tubes that require solvent desorption by transferring the adsorbent material to a sample vial containing the desorption solvent. The desorption solvent shall be the same as the solvent used to prepare calibration standards. The volume of solvent depends on the amount of adsorbed material to be desorbed (1.0 mL per 100 mg of adsorbent material) and also on the amount of test compounds present. Final volume adjustment and or dilution can be made so that the concentration of test compounds in the desorption solvent is bracketed by the concentration of the calibration solutions. Ultrasonicate the desorption solvent for 15 min in an ice bath. Allow the sample to sit for a period of time so that the adsorbent material can settle to the bottom of the vial. Transfer the solvent with a pasteur pipet (minimizing the amount of adsorbent material taken) to another vial and store at 4 °C (39.2 °F).

11.2.2 Analyze the desorption solvent or direct thermal desorption tubes from each sample using the same analytical parameters used for the calibration standard. Calculate the total weight detected for each compound (Equation 305–4, Section 12.5). The slope (area/amount) and y-intercept are calculated from the line bracketed between the two closest calibration points. Correct the concentration of each waste sample with the appropriate recovery efficiency factor and the split flow ratio (if used). The final concentration of each individual test compound is calculated by dividing the corrected measured weight for that compound by the weight of the original sample determined in Section 8.3.1 (Equation 305–5, Section 12.6).

11.2.3 Repeat the analysis for the three samples collected in Section 8.3. Report the corrected concentration of each of the waste samples, average waste concentration, and relative standard deviation (Equation 305–6, Section 12.7).

12.0 Data Analysis and Calculations.

12.1 Nomenclature.

A_S = Mean area counts of test compound in standard.

A_U = Mean area counts of test compound in sample desorption solvent.

b = Y-intercept of the line formed between the two closest calibration standards that bracket the concentration of the sample.

C_T = Amount of test compound (μg) in calibration standard.

C_F = Correction for adjusting final amount of sample detected for losses during individual sample runs.

F_P = Nitrogen flow through the purge chamber (6 L/min).

F_S = Nitrogen split flow directed to the sample recovery system (use 6 L/min if split flow design was not used).

PPM = Final concentration of test compound in waste sample [μg/g (which is equivalent to parts per million by weight (ppmw))].

RE = Recovery efficiency for adjusting final amount of sample detected for losses due to inefficient trapping and desorption techniques.

R.F. = Response factor for test compound, calculated from a calibration standard.
S = Slope of the line (area counts/C_T) formed between two closest calibration points that bracket the concentration of the sample.
W_C = Weight of test compound expected to be recovered in spike solution based on theoretical amount (μg).
W_E = Weight of vial and PEG (g).
W_F = Weight of vial, PEG and waste sample (g).
W_S = Weight of original waste sample (g).
W_T = Corrected weight of test compound measured (μg) in sample.
W_X = Weight of test compound measured during analysis of recovery efficiency spike samples (μg).

12.2 Recovery efficiency for determining trapping/desorption efficiency of individual test compounds in the spike solution, decimal value.

$$RE = \frac{W_X}{W_C} \qquad \text{Eq. 305-1}$$

12.3 Weight of waste sample (g).

$$W_S = W_F - W_E \qquad \text{Eq. 305-2}$$

12.4 Response factor for individual test compounds.

$$RF = \frac{C_T}{A_S} \qquad \text{Eq. 305-3}$$

12.5 Corrected weight of a test compound in the sample, in μg.

$$W_T = \frac{A_u - b}{S} \times \frac{1}{RE} \times \frac{F_p}{F_s} \qquad \text{Eq. 305-4}$$

12.6 Final concentration of a test compound in the sample in ppmw.

$$PPM = \frac{W_T}{W_S} \qquad \text{Eq. 305-5}$$

12.7 Relative standard deviation (RSD) calculation.

$$RSD = \frac{100}{\overline{PPM}} \sqrt{\frac{\sum_{i=1}^{n} \left(PPM_i - \overline{PPM}\right)^2}{n-1}} \qquad \text{Eq. 305-6}$$

13.0 Method Performance. [Reserved]

14.0 Pollution Prevention. [Reserved]

15.0 Waste Management. [Reserved]

16.0 References. [Reserved]

17.0 Tables, Diagrams, Flowcharts, and Validation Data

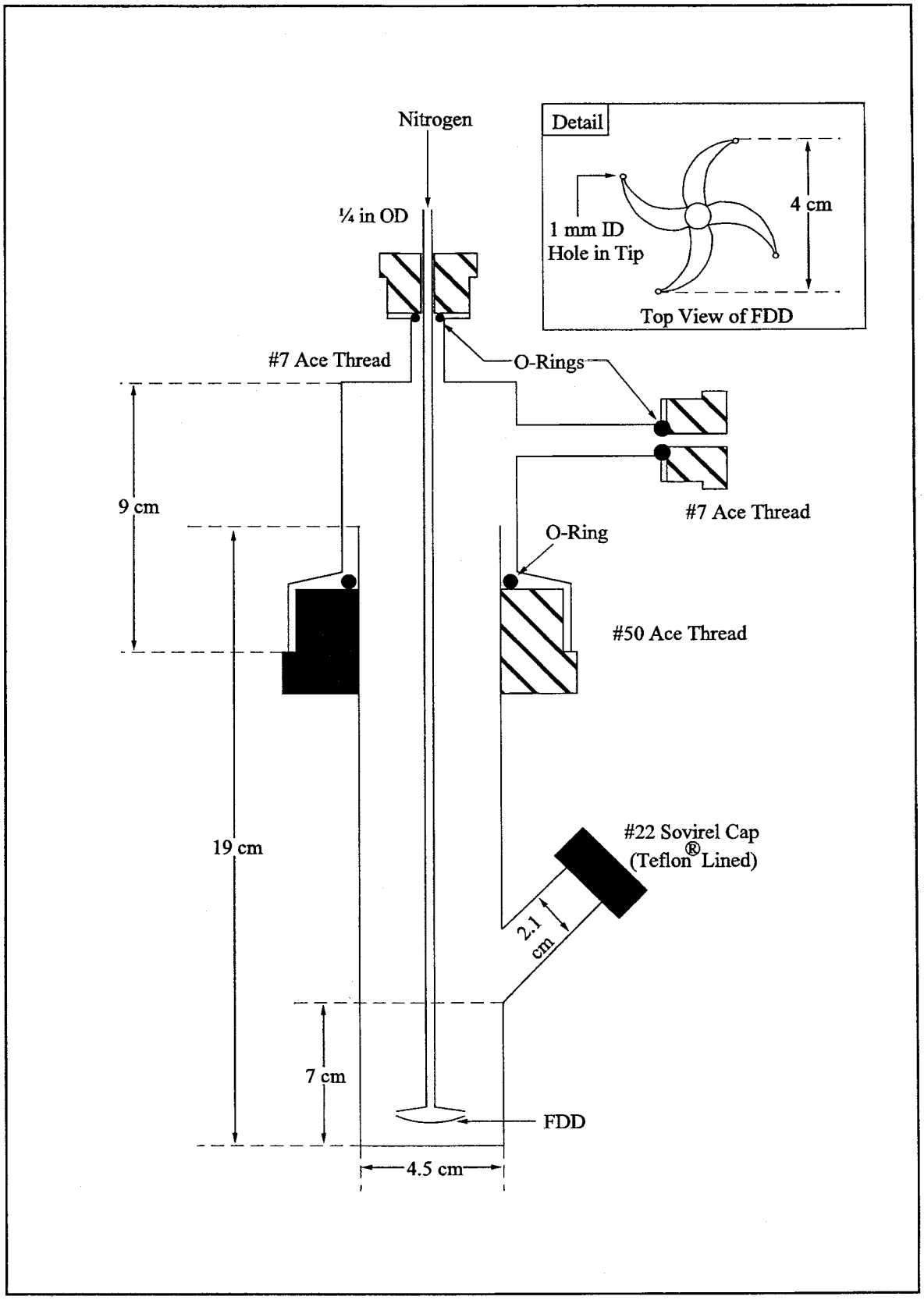

Figure 305-1. Schematic of Purge Chamber.

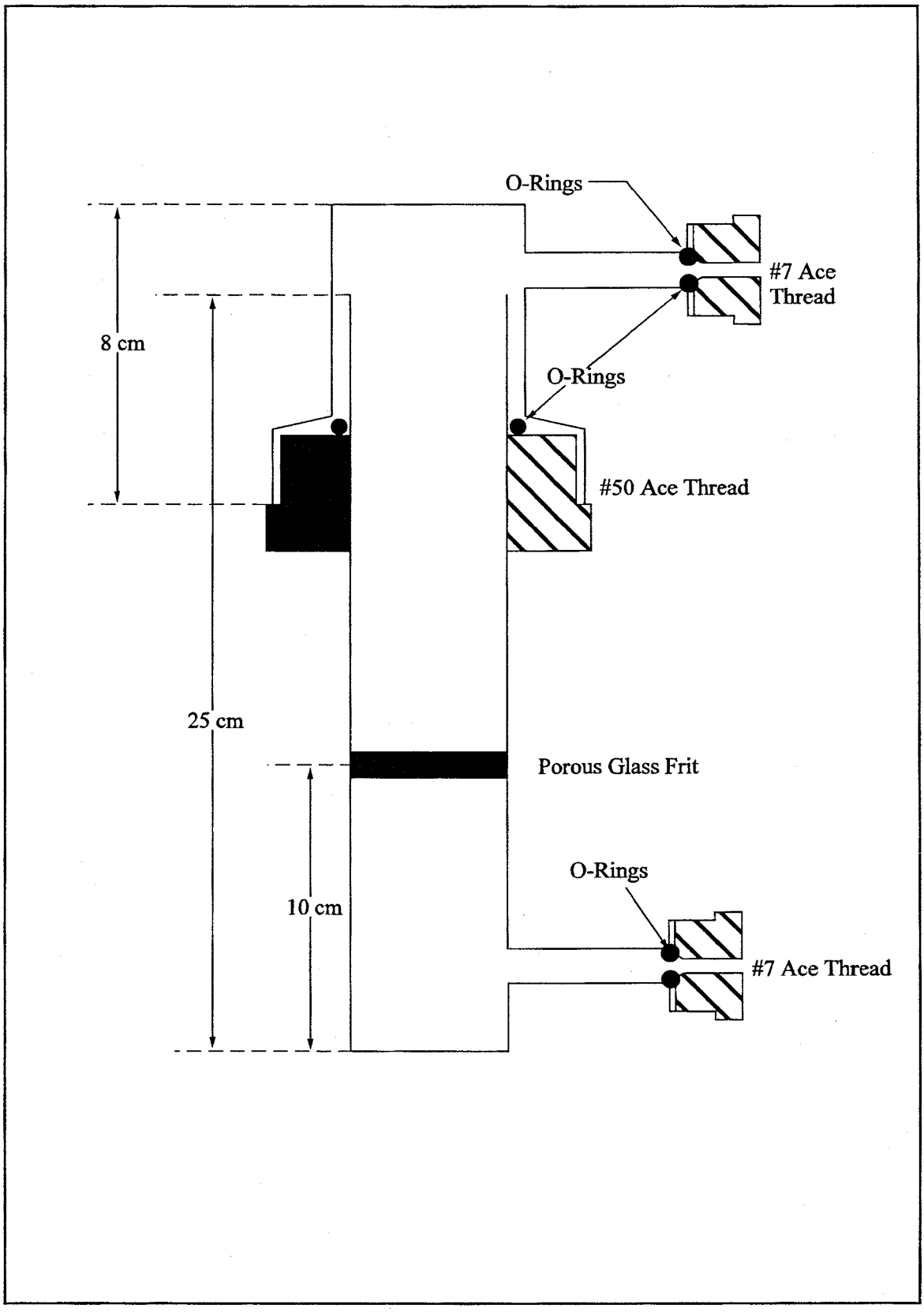

Figure 305-2. Schematic of Coalescing Filter.

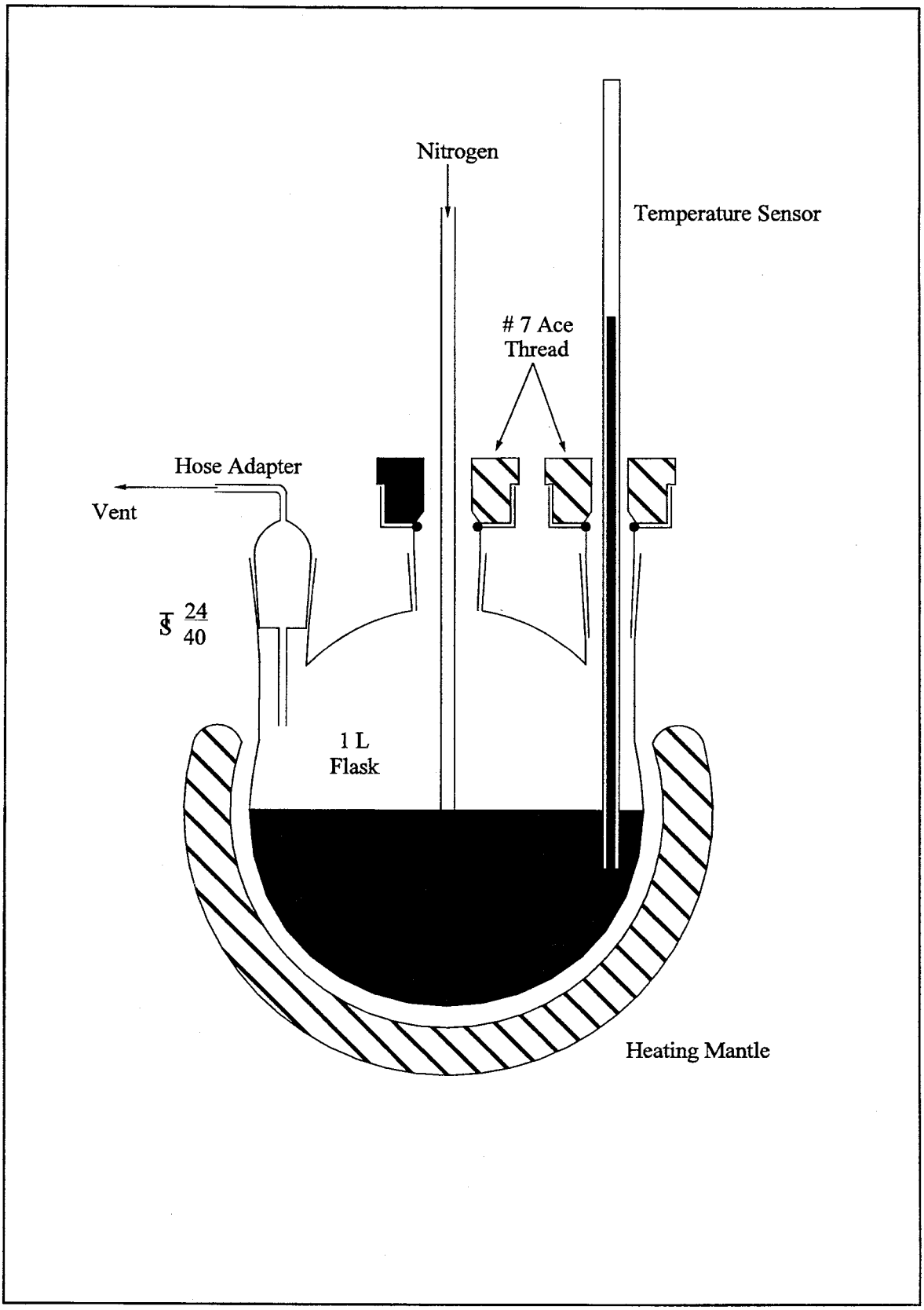

Figure 305-3. Schematic of PEG Cleaning System.

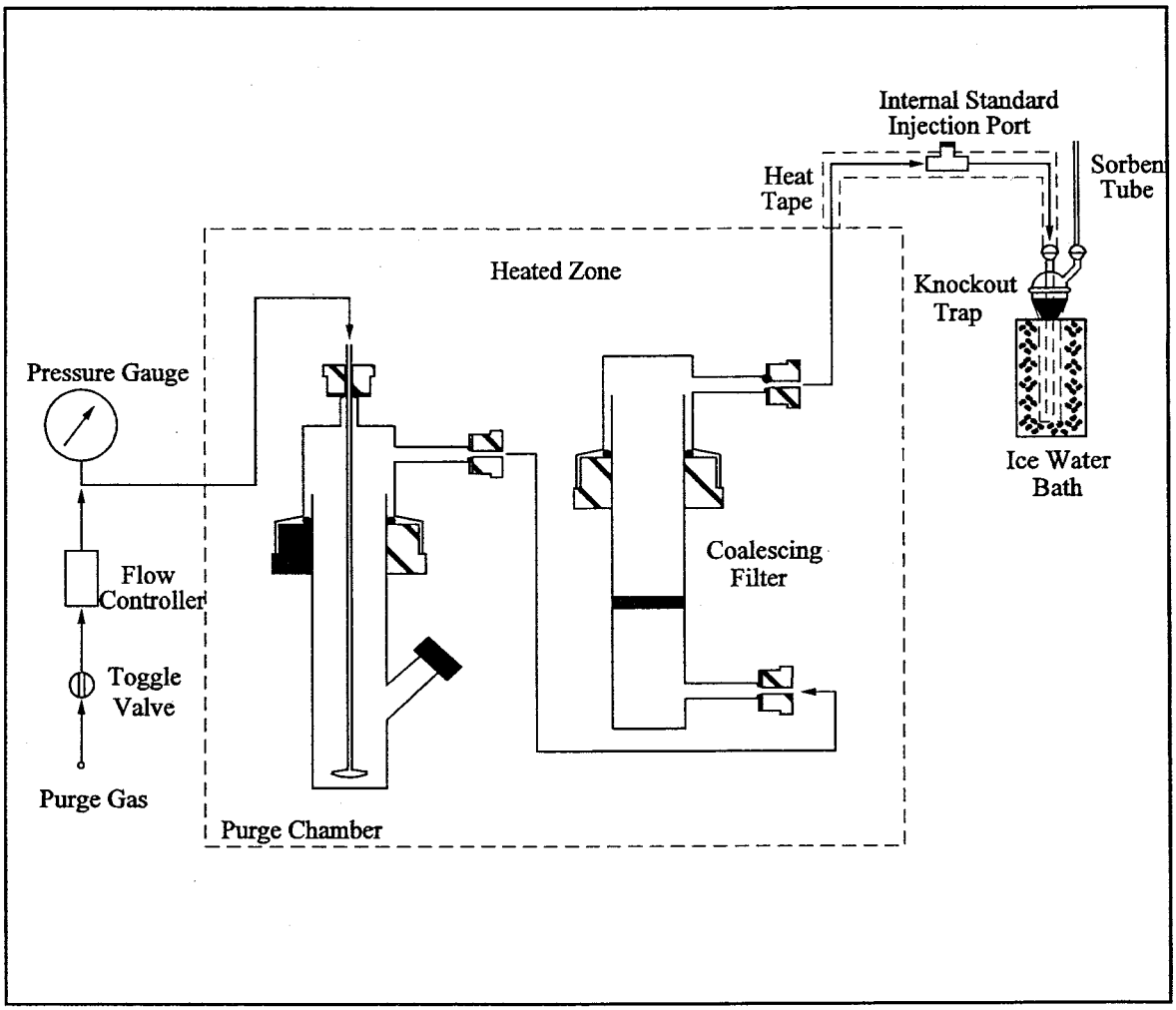

Figure 305-4. Schematic of Purge and Recovery Apparatus.

BILLING CODE 6560–50–C

Method 306—Determination of Chromium Emissions From Decorative and Hard Chromium Electroplating and Chromium Anodizing Operations—Isokinetic Method

NOTE: This method does not include all of the specifications (*e.g.,* equipment and supplies) and procedures (*e.g.,* sampling and analytical) essential to its performance. Some material is incorporated by reference from other methods in 40 CFR Part 60, Appendix A. Therefore, to obtain reliable results, persons using this method should have a thorough knowledge of at least Method 5.

1.0 Scope and Application

1.1 Analytes.

Analyte	CAS No.	Sensitivity
Chromium	7440–47–3	See Sec. 13.2.

1.2 Applicability. This method applies to the determination of chromium (Cr) in emissions from decorative and hard chrome electroplating facilities, chromium anodizing operations, and continuous chromium plating operations at iron and steel facilities.

1.3 Data Quality Objectives. [Reserved]

2.0 Summary of Method

2.1 Sampling. An emission sample is extracted isokinetically from the source using an unheated Method 5 sampling train (40 CFR Part 60, Appendix A), with a glass nozzle and probe liner, but with the filter omitted. The sample time shall be at least two hours. The Cr emissions are collected in an alkaline solution containing 0.1 N sodium hydroxide (NaOH) or 0.1 N sodium bicarbonate ($NaHCO_3$). The collected samples are recovered using an alkaline solution and are then

transported to the laboratory for analysis.

2.2 Analysis.

2.2.1 Total chromium samples with high chromium concentrations (≥35 µg/L) may be analyzed using inductively coupled plasma emission spectrometry (ICP) at 267.72 nm.

Note: The ICP analysis is applicable for this method only when the solution analyzed has a Cr concentration greater than or equal to 35 µg/L or five times the method detection limit as determined according to Appendix B in 40 CFR Part 136.

2.2.2 Alternatively, when lower total chromium concentrations (<35 µg/L) are encountered, a portion of the alkaline sample solution may be digested with nitric acid and analyzed by graphite furnace atomic absorption spectroscopy (GFAAS) at 357.9 nm.

2.2.3 If it is desirable to determine hexavalent chromium (Cr^{+6}) emissions, the samples may be analyzed using an ion chromatograph equipped with a post-column reactor (IC/PCR) and a visible wavelength detector. To increase sensitivity for trace levels of Cr^{+6}, a preconcentration system may be used in conjunction with the IC/PCR.

3.0 Definitions

3.1 *Total Chromium*—measured chromium content that includes both major chromium oxidation states (Cr^{+3}, Cr^{+3}).

3.2 *May*—Implies an optional operation.

3.3 *Digestion*—The analytical operation involving the complete (or nearly complete) dissolution of the sample in order to ensure the complete solubilization of the element (analyte) to be measured.

3.4 *Interferences*—Physical, chemical, or spectral phenomena that may produce a high or low bias in the analytical result.

3.5 *Analytical System*—All components of the analytical process including the sample digestion and measurement apparatus.

3.6 *Sample Recovery*—The quantitative transfer of sample from the collection apparatus to the sample preparation (digestion, etc.) apparatus. This term should not be confused with analytical recovery.

3.7 *Matrix Modifier*—A chemical modification to the sample during GFAAS determinations to ensure that the analyte is not lost during the measurement process (prior to the atomization stage)

3.8 *Calibration Reference Standards*—Quality control standards used to check the accuracy of the instrument calibration curve prior to sample analysis.

3.9 *Continuing Check Standard*—Quality control standards used to verify that unacceptable drift in the measurement system has not occurred.

3.10 *Calibration Blank*—A blank used to verify that there has been no unacceptable shift in the baseline either immediately following calibration or during the course of the analytical measurement.

3.11 *Interference Check*—An analytical/measurement operation that ascertains whether a measurable interference in the sample exists.

3.12 *Interelement Correction Factors*—Factors used to correct for interfering elements that produce a false signal (high bias).

3.13 *Duplicate Sample Analysis*—Either the repeat measurement of a single solution or the measurement of duplicate preparations of the same sample. It is important to be aware of which approach is required for a particular type of measurement. For example, no digestion is required for the ICP determination and the duplicate instrument measurement is therefore adequate whereas duplicate digestion/instrument measurements are required for GFAAS.

3.14 *Matrix Spiking*—Analytical spikes that have been added to the actual sample matrix either before (Section 9.2.5.2) or after (Section 9.1.6). Spikes added to the sample *prior* to a preparation technique (*e.g.*, digestion) allow for the assessment of an overall method accuracy while those added *after* only provide for the *measurement* accuracy determination.

4.0 Interferences

4.1 ICP Interferences.

4.1.1 ICP Spectral Interferences. Spectral interferences are caused by: overlap of a spectral line from another element; unresolved overlap of molecular band spectra; background contribution from continuous or recombination phenomena; and, stray light from the line emission of high-concentrated elements. Spectral overlap may be compensated for by correcting the raw data with a computer and measuring the interfering element. At the 267.72 nm Cr analytical wavelength, iron, manganese, and uranium are potential interfering elements. Background and stray light interferences can usually be compensated for by a background correction adjacent to the analytical line. Unresolved overlap requires the selection of an alternative chromium wavelength. Consult the instrument manufacturer's operation manual for interference correction procedures.

4.1.2 ICP Physical Interferences. High levels of dissolved solids in the samples may cause significant inaccuracies due to salt buildup at the nebulizer and torch tips. This problem can be controlled by diluting the sample or by extending the rinse times between sample analyses. Standards shall be prepared in the same solution matrix as the samples (*i.e.,* 0.1 N NaOH or 0.1 N $NaHCO_3$).

4.1.3 ICP Chemical Interferences. These include molecular compound formation, ionization effects and solute vaporization effects, and are usually not significant in the ICP procedure, especially if the standards and samples are matrix matched.

4.2 GFAAS Interferences.

4.2.1 GFAAS Chemical Interferences. Low concentrations of calcium and/or phosphate may cause interferences; at concentrations above 200 µg/L, calcium's effect is constant and eliminates the effect of phosphate. Calcium nitrate is therefore added to the concentrated analyte to ensure a known constant effect. Other matrix modifiers recommended by the instrument manufacturer may also be considered.

4.2.2 GFAAS Cyanide Band Interferences. Nitrogen should not be used as the purge gas due to cyanide band interference.

4.2.3 GFAAS Spectral Interferences. Background correction may be required because of possible significant levels of nonspecific absorption and scattering at the 357.9 nm analytical wavelength.

4.2.4 GFAAS Background Interferences. Zeeman or Smith-Hieftje background correction is recommended for interferences resulting from high levels of dissolved solids in the alkaline impinger solutions.

4.3 IC/PCR Interferences.

4.3.1 IC/PCR Chemical Interferences. Components in the sample matrix may cause Cr^{+6} to convert to trivalent chromium (Cr^{+3}) or cause Cr^{+3} to convert to Cr^{+6}. The chromatographic separation of Cr^{+6} using ion chromatography reduces the potential for other metals to interfere with the post column reaction. For the IC/PCR analysis, only compounds that coelute with Cr^{+6} and affect the diphenylcarbazide reaction will cause interference.

4.3.2 IC/PCR Background Interferences. Periodic analyses of reagent water blanks are used to demonstrate that the analytical system is essentially free of contamination. Sample cross-contamination can occur when high-level and low-level samples or standards are analyzed alternately and can be eliminated by thorough purging of the sample loop. Purging of

the sample can easily be achieved by increasing the injection volume to ten times the size of the sample loop.

5.0 Safety

5.1 Disclaimer. This method may involve hazardous materials, operations, and equipment. This test method may not address all of the safety problems associated with its use. It is the responsibility of the user to establish appropriate safety and health practices and to determine the applicability of regulatory limitations prior to performing this test method.

5.2 Hexavalent chromium compounds have been listed as carcinogens although chromium (III) compounds show little or no toxicity. Chromium can be a skin and respiratory irritant.

6.0 Equipment and Supplies

6.1 Sampling Train.

6.1.1 A schematic of the sampling train used in this method is shown in Figure 306–1. The train is the same as shown in Method 5, Section 6.0 (40 CFR Part 60, Appendix A) except that the probe liner is unheated, the particulate filter is omitted, and quartz or borosilicate glass must be used for the probe nozzle and liner in place of stainless steel.

6.1.2 Probe fittings of plastic such as Teflon, polypropylene, etc. are recommended over metal fittings to prevent contamination. If desired, a single combined probe nozzle and liner may be used, but such a single glass assembly is not a requirement of this methodology.

6.1.3 Use 0.1 N NaOH or 0.1 N $NaHCO_3$ in the impingers in place of water.

6.1.4 Operating and maintenance procedures for the sampling train are described in APTD–0576 of Method 5. Users should read the APTD–0576 document and adopt the outlined procedures.

6.1.5 Similar collection systems which have been approved by the Administrator may be used.

6.2 Sample Recovery. Same as Method 5, [40 CFR Part 60, Appendix A], with the following exceptions:

6.2.1 Probe-Liner and Probe-Nozzle Brushes. Brushes are not necessary for sample recovery. If a probe brush is used, it must be non-metallic.

6.2.2 Sample Recovery Solution. Use 0.1 N NaOH or 0.1 N $NaHCO_3$, whichever is used as the impinger absorbing solution, in place of acetone to recover the sample.

6.2.3 Sample Storage Containers. Polyethylene, with leak-free screw cap, 250 mL, 500 mL or 1,000 mL.

6.3 Analysis.

6.3.1 General. For analysis, the following equipment is needed.

6.3.1.1 Phillips Beakers. (Phillips beakers are preferred, but regular beakers may also be used.)

6.3.1.2 Hot Plate.

6.3.1.3 Volumetric Flasks. Class A, various sizes as appropriate.

6.3.1.4 Assorted Pipettes.

6.3.2 Analysis by ICP.

6.3.2.1 ICP Spectrometer. Computer-controlled emission spectrometer with background correction and radio frequency generator.

6.3.2.2 Argon Gas Supply. Welding grade or better.

6.3.3 Analysis by GFAAS.

6.3.3.1 Chromium Hollow Cathode Lamp or Electrodeless Discharge Lamp.

6.3.3.2 Graphite Furnace Atomic Absorption Spectrophotometer.

6.3.3.3 Furnace Autosampler.

6.3.4 Analysis by IC/PCR.

6.3.4.1 IC/PCR System. High performance liquid chromatograph pump, sample injection valve, post-column reagent delivery and mixing system, and a visible detector, capable of operating at 520 nm-540 nm, all with a non-metallic (or inert) flow path. An electronic peak area mode is recommended, but other recording devices and integration techniques are acceptable provided the repeatability criteria and the linearity criteria for the calibration curve described in Section 10.4 can be satisfied. A sample loading system is required if preconcentration is employed.

6.3.4.2 Analytical Column. A high performance ion chromatograph (HPIC) non-metallic column with anion separation characteristics and a high loading capacity designed for separation of metal chelating compounds to prevent metal interference. Resolution described in Section 11.6 must be obtained. A non-metallic guard column with the same ion-exchange material is recommended.

6.3.4.3 Preconcentration Column (for older instruments). An HPIC non-metallic column with acceptable anion retention characteristics and sample loading rates must be used as described in Section 11.6.

6.3.4.4 Filtration Apparatus for IC/PCR.

6.3.4.4.1 Teflon, or equivalent, filter holder to accommodate 0.45-µm acetate, or equivalent, filter, if needed to remove insoluble particulate matter.

6.3.4.4.2 0.45-µm Filter Cartridge. For the removal of insoluble material. To be used just prior to sample injection/analysis.

7.0 Reagents and Standards

Note: Unless otherwise indicated, all reagents should conform to the specifications established by the Committee on Analytical Reagents of the American Chemical Society (ACS reagent grade). Where such specifications are not available, use the best available grade. Reagents should be checked by the appropriate analysis prior to field use to assure that contamination is below the analytical detection limit for the ICP or GFAAS total chromium analysis; and that contamination is below the analytical detection limit for Cr^{+6} using IC/PCR for direct injection or, if selected, preconcentration.

7.1 Sampling.

7.1.1 Water. Reagent water that conforms to ASTM Specification D1193–77 or 91 Type II (incorporated by reference see § 63.14). All references to water in the method refer to reagent water unless otherwise specified. It is recommended that water blanks be checked prior to preparing the sampling reagents to ensure that the Cr content is less than three (3) times the anticipated detection limit of the analytical method.

7.1.2 Sodium Hydroxide (NaOH) Absorbing Solution, 0.1 N. Dissolve 4.0 g of sodium hydroxide in 1 liter of water to obtain a pH of approximately 8.5.

7.1.3 Sodium Bicarbonate ($NaHCO_3$) Absorbing Solution, 0.1 N. Dissolve approximately 8.5 g of sodium bicarbonate in 1 liter of water to obtain a pH of approximately 8.3.

7.1.4 Chromium Contamination.

7.1.4.1 The absorbing solution shall not exceed the QC criteria noted in Section 7.1.1 (≤ 3 times the instrument detection limit).

7.1.4.2 When the Cr^{+6} content in the field samples exceeds the blank concentration by at least a factor of ten (10), Cr^{+6} blank concentrations ≥ 10 times the detection limit will be allowed.

Note: At sources with high concentrations of acids and/or SO_2, the concentration of NaOH or $NaHCO_3$ should be ≥ 0.5 N to insure that the pH of the solution remains at or above 8.5 for NaOH and 8.0 for $NaHCO_3$ during and after sampling.

7.1.5 Silica Gel. Same as in Method 5.

7.2 Sample Recovery.

7.2.1 0.1 N NaOH or 0.1 N $NaHCO_3$. Use the same solution for the sample recovery that is used for the impinger absorbing solution.

7.2.2 pH Indicator Strip, for IC/PCR. pH indicator capable of determining the pH of solutions between the pH range of 7 and 12, at 0.5 pH increments.

7.3 Sample Preparation and Analysis.

7.3.1 Nitric Acid (HNO_3), Concentrated, for GFAAS. Trace metals

grade or better HNO_3 must be used for reagent preparation. The ACS reagent grade HNO_3 is acceptable for cleaning glassware.

7.3.2 HNO_3, 1.0% (v/v), for GFAAS. Prepare, by slowly stirring, 10 mL of concentrated HNO_3) into 800 mL of reagent water. Dilute to 1,000 mL with reagent water. The solution shall contain less than 0.001 mg Cr/L.

7.3.3 Calcium Nitrate $Ca(NO_3)_2$ Solution (10 µg Ca/mL) for GFAAS analysis. Prepare the solution by weighing 40.9 mg of $Ca(NO_3)_2$ into a 1 liter volumetric flask. Dilute with reagent water to 1 liter.

7.3.4 Matrix Modifier, for GFAAS. See instrument manufacturer's manual for suggested matrix modifier.

7.3.5 Chromatographic Eluent, for IC/PCR. The eluent used in the analytical system is ammonium sulfate based.

7.3.5.1 Prepare by adding 6.5 mL of 29 percent ammonium hydroxide (NH_4OH) and 33 g of ammonium sulfate ($(NH_4)_2SO_4$) to 500 mL of reagent water. Dilute to 1 liter with reagent water and mix well.

7.3.5.2 Other combinations of eluents and/or columns may be employed provided peak resolution, repeatability, linearity, and analytical sensitivity as described in Sections 9.3 and 11.6 are acceptable.

7.3.6 Post-Column Reagent, for IC/PCR. An effective post-column reagent for use with the chromatographic eluent described in Section 7.3.5 is a diphenylcarbazide (DPC)-based system. Dissolve 0.5 g of 1,5-diphenylcarbazide in 100 mL of ACS grade methanol. Add 500 mL of reagent water containing 50 mL of 96 percent spectrophotometric grade sulfuric acid. Dilute to 1 liter with reagent water.

7.3.7 Chromium Standard Stock Solution (1000 mg/L). Procure a certified aqueous standard or dissolve 2.829 g of potassium dichromate ($K_2Cr_2O_7$), in reagent water and dilute to 1 liter.

7.3.8 Calibration Standards for ICP or IC/PCR. Prepare calibration standards for ICP or IC/PCR by diluting the Cr standard stock solution (Section 7.3.7) with 0.1 N NaOH or 0.1 N $NaHCO_3$, whichever is used as the impinger absorbing solution, to achieve a matrix similar to the actual field samples. Suggested levels are 0, 50, 100, and 200 µg Cr/L for ICP, and 0, 1, 5, and 10 µg Cr^{+6}/L for IC/PCR.

7.3.9 Calibration Standards for GFAAS. Chromium solutions for GFAAS calibration shall contain 1.0 percent (v/v) HNO_3. The zero standard shall be 1.0 percent (v/v) HNO_3. Calibration standards should be prepared daily by diluting the Cr standard stock solution (Section 7.3.7) with 1.0 percent HNO_3. Use at least four standards to make the calibration curve. Suggested levels are 0, 10, 50, and 100 µg Cr/L.

7.4 Glassware Cleaning Reagents.

7.4.1 HNO_3, Concentrated. ACS reagent grade or equivalent.

7.4.2 Water. Reagent water that conforms to ASTM Specification D1193–77 or 91 Type II.

7.4.3 HNO_3, 10 percent (v/v). Add by stirring 500 mL of concentrated HNO_3 into a flask containing approximately 4,000 mL of reagent water. Dilute to 5,000 mL with reagent water. Mix well. The reagent shall contain less than 2 µg Cr/L.

7.5 Quality Assurance Audit Samples.

7.5.1 When making compliance determinations, and upon availability, audit samples shall be obtained from the appropriate EPA regional Office or from the responsible enforcement authority and analyzed in conjunction with the field samples.

7.5.2 If EPA or National Institute of Standards and Technology (NIST) reference audit sample are not available, a mid-range standard, prepared from an independent commercial source, may be used.

Note: To order audit samples, contact the responsible enforcement authority at least 30 days prior to the test date to allow sufficient time for the audit sample to be delivered.

8.0 Sample Collection, Preservation, Holding Times, Storage, and Transport

Note: Prior to sample collection, consideration should be given to the type of analysis (Cr^{+6} or total Cr) that will be performed. Which analysis option(s) will be performed will determine which sample recovery and storage procedures will be required to process the sample (See Figures 306–3 and 306–4).

8.1 Sample Collection. Same as Method 5 (40 CFR Part 60, Appendix A), with the following exceptions.

8.1.1 Omit the particulate filter and filter holder from the sampling train. Use a glass nozzle and probe liner instead of stainless steel. Do not heat the probe. Place 100 mL of 0.1 N NaOH or 0.1 N $NaHCO_3$ in each of the first two impingers, and record the data for each run on a data sheet such as shown in Figure 306–2.

8.1.2 Clean all glassware prior to sampling in hot soapy water designed for laboratory cleaning of glassware. Next, rinse the glassware three times with tap water, followed by three additional rinses with reagent water. Then soak the glassware in 10% (v/v) HNO_3 solution for a minimum of 4 hours, rinse three times with reagent water, and allow to air dry. Cover all glassware openings where contamination can occur with Parafilm, or equivalent, until the sampling train is assembled for sampling.

8.1.3 Train Operation. Follow the basic procedures outlined in Method 5 in conjunction with the following instructions. Train sampling rate shall not exceed 0.030 m^3/min (1.0 cfm) during a run.

8.2 Sample Recovery. Follow the basic procedures of Method 5, with the exceptions noted.

8.2.1 A particulate filter is not recovered from this train.

8.2.2 Tester shall select either the total Cr or Cr^{+6} sample recovery option.

8.2.3 Samples to be analyzed for both total Cr and Cr^{+6}, shall be recovered using the Cr^{+6} sample option (Section 8.2.6).

8.2.4 A field reagent blank shall be collected for either of the Cr or the Cr^{+6} analysis. If both analyses (Cr and Cr^{+6}) are to be conducted on the samples, collect separate reagent blanks for each analysis.

Note: Since particulate matter is not usually present at chromium electroplating and/or chromium anodizing operations, it is not necessary to filter the Cr^{+6} samples unless there is observed sediment in the collected solutions. If it is necessary to filter the Cr^{+6} solutions, please refer to Method 0061, Determination of Hexavalent Chromium Emissions From Stationary Sources, Section 7.4, Sample Preparation in SW–846 (see Reference 1).

8.2.5 Total Cr Sample Option.

8.2.5.1 Container No. 1. Measure the volume of the liquid in the first, second, and third impingers and quantitatively transfer into a labeled sample container.

8.2.5.2 Use approximately 200 to 300 mL of the 0.1 N NaOH or 0.1 N $NaHCO_3$ absorbing solution to rinse the probe nozzle, probe liner, three impingers, and connecting glassware; add this rinse to Container No. 1.

8.2.6 Cr^{+6} Sample Option.

8.2.6.1 Container No. 1. Measure and record the pH of the absorbing solution contained in the *first* impinger at the end of the sampling run using a pH indicator strip. The pH of the solution must be ≥8.5 for NaOH and ≥8.0 for $NaHCO_3$. If it is not, discard the collected sample, increase the normality of the NaOH or $NaHCO_3$ impinger absorbing solution to 0.5 N or to a solution normality approved by the Administrator and collect another air emission sample.

8.2.6.2 After determining the pH of the first impinger solution, combine and measure the volume of the liquid in the first, second, and third impingers and

quantitatively transfer into the labeled sample container. Use approximately 200 to 300 mL of the 0.1 N NaOH or 0.1 N $NaHCO_3$ absorbing solution to rinse the probe nozzle, probe liner, three impingers, and connecting glassware; add this rinse to Container No. 1.

8.2.7 Field Reagent Blank.

8.2.7.1 Container No. 2.

8.2.7.2 Place approximately 500 mL of the 0.1 N NaOH or 0.1 N $NaHCO_3$ absorbing solution into a labeled sample container.

8.3 Sample Preservation, Storage, and Transport.

8.3.1 Total Cr Sample Option. Samples to be analyzed for total Cr need not be refrigerated.

8.3.2 Cr^{+6} Sample Option. Samples to be analyzed for Cr^{+6} must be shipped and stored at 4°C. Allow Cr^{+6} samples to return to ambient temperature prior to analysis.

8.4 Sample Holding Times.

8.4.1 Total Cr Sample Option. Samples to be analyzed for total Cr shall be analyzed within 60 days of collection.

8.4.2 Cr^{+6} Sample Option. Samples to be analyzed for Cr^{+6} shall be analyzed within 14 days of collection.

9.0 Quality Control

9.1 ICP Quality Control.

9.1.1 ICP Calibration Reference Standards. Prepare a calibration reference standard using the same alkaline matrix as the calibration standards; it should be at least 10 times the instrumental detection limit.

9.1.1.1 This reference standard must be prepared from a different Cr stock solution source than that used for preparation of the calibration curve standards.

9.1.1.2 Prior to sample analysis, analyze at least one reference standard.

9.1.1.3 The calibration reference standard must be measured within 10 percent of it's true value for the curve to be considered valid.

9.1.1.4 The curve must be validated before sample analyses are performed.

9.1.2 ICP Continuing Check Standard.

9.1.2.1 Perform analysis of the check standard with the field samples as described in Section 11.2 (at least after every 10 samples, and at the end of the analytical run).

9.1.2.2 The check standard can either be the mid-range calibration standard or the reference standard. The results of the check standard shall agree within 10 percent of the expected value; if not, terminate the analyses, correct the problem, recalibrate the instrument, and rerun all samples analyzed subsequent to the last acceptable check standard analysis.

9.1.3 ICP Calibration Blank.

9.1.3.1 Perform analysis of the calibration blank with the field samples as described in Section 11.2 (at least after every 10 samples, and at the end of the analytical run).

9.1.3.2 The results of the calibration blank shall agree within three standard deviations of the mean blank value. If not, analyze the calibration blank two more times and average the results. If the average is not within three standard deviations of the background mean, terminate the analyses, correct the problem, recalibrate, and reanalyze all samples analyzed subsequent to the last acceptable calibration blank analysis.

9.1.4 ICP Interference Check. Prepare an interference check solution that contains known concentrations of interfering elements that will provide an adequate test of the correction factors in the event of potential spectral interferences.

9.1.4.1 Two potential interferences, iron and manganese, may be prepared as 1000 µg/mL and 200 µg/mL solutions, respectively. The solutions should be prepared in dilute HNO_3 (1–5 percent). Particular care must be used to ensure that the solutions and/or salts used to prepare the solutions are of ICP grade purity (*i.e.*, that no measurable Cr contamination exists in the salts/solutions). Commercially prepared interfering element check standards are available.

9.1.4.2 Verify the interelement correction factors every three months by analyzing the interference check solution. The correction factors are calculated according to the instrument manufacturer's directions. If the interelement correction factors are used properly, no false Cr should be detected.

9.1.4.3 Negative results with an absolute value greater than three (3) times the detection limit are usually the results of the background correction position being set incorrectly. Scan the spectral region to ensure that the correction position has not been placed on an interfering peak.

9.1.5 ICP Duplicate Sample Analysis. Perform one duplicate sample analysis for each compliance sample batch (3 runs).

9.1.5.1 As there is no sample preparation required for the ICP analysis, a duplicate analysis is defined as a repeat analysis of one of the field samples. The selected sample shall be analyzed using the same procedures that were used to analyze the original sample.

9.1.5.2 Duplicate sample analyses shall agree within 10 percent of the original measurement value.

9.1.5.3 Report the original analysis value for the sample and report the duplicate analysis value as the QC check value. If agreement is not achieved, perform the duplicate analysis again. If agreement is not achieved the second time, perform corrective action to identify and correct the problem before analyzing the sample for a third time.

9.1.6 ICP Matrix Spiking. Spiked samples shall be prepared and analyzed daily to ensure that there are no matrix effects, that samples and standards have been matrix-matched, and that the laboratory equipment is operating properly.

9.1.6.1 Spiked sample recovery analyses should indicate a recovery for the Cr spike of between 75 and 125 percent.

9.1.6.2 Cr levels in the spiked sample should provide final solution concentrations that are within the linear portion of the calibration curve, as well as, at a concentration level at least: equal to that of the original sample; and, ten (10) times the detection limit.

9.1.6.3 If the spiked sample concentration meets the stated criteria but exceeds the linear calibration range, the spiked sample must be diluted with the field absorbing solution.

9.1.6.4 If the recoveries for the Cr spiked samples do not meet the specified criteria, perform corrective action to identify and correct the problem prior to reanalyzing the samples.

9.1.7 ICP Field Reagent Blank.

9.1.7.1 Analyze a minimum of one matrix-matched field reagent blank (Section 8.2.4) per sample batch to determine if contamination or memory effects are occurring.

9.1.7.2 If contamination or memory effects are observed, perform corrective action to identify and correct the problem before reanalyzing the samples.

9.1.8 Audit Sample Analysis.

9.1.8.1 When the method is used to analyze samples to demonstrate compliance with a source emission regulation, an audit sample must be analyzed, subject to availability.

9.1.8.2 Concurrently analyze the audit sample and the compliance samples in the same manner to evaluate the technique of the analyst and the standards preparation.

9.1.8.3 The same analyst, analytical reagents, and analytical system shall be used for the compliance samples and the audit sample. If this condition is met, duplicate auditing of subsequent compliance analyses for the same enforcement agency within a 30-day period is waived. An audit sample set may not be used to validate different

sets of compliance samples under the jurisdiction of separate enforcement agencies, unless prior arrangements have been made with both enforcement agencies.

9.1.9 Audit Sample Results.

9.1.9.1 Calculate the audit sample concentrations and submit results using the instructions provided with the audit samples.

9.1.9.2 Report the results of the audit samples and the compliance determination samples along with their identification numbers, and the analyst's name to the responsible enforcement authority. Include this information with reports of any subsequent compliance analyses for the same enforcement authority during the 30-day period.

9.1.9.3 The concentrations of the audit samples obtained by the analyst shall agree within the values specified by the compliance auditor. If the specified range is not met, reanalyze the compliance and audit samples, and include initial and reanalysis values in the test report.

9.1.9.4 Failure to meet the specified range may require retests unless the audit problems are resolved. However, if the audit results do not affect the compliance or noncompliance status of the affected facility, the Administrator may waive the reanalysis requirement, further audits, or retests and accept the results of the compliance test. While steps are being taken to resolve audit analysis problems, the Administrator may also choose to use the data to determine the compliance or noncompliance status of the affected facility.

9.2 GFAAS Quality Control.

9.2.1 GFAAS Calibration Reference Standards. The calibration curve must be verified by using at least one calibration reference standard (made from a reference material or other independent standard material) at or near the mid-range of the calibration curve.

9.2.1.1 The calibration curve must be validated before sample analyses are performed.

9.2.1.2 The calibration reference standard must be measured within 10 percent of its true value for the curve to be considered valid.

9.2.2 GFAAS Continuing Check Standard.

9.2.2.1 Perform analysis of the check standard with the field samples as described in Section 11.4 (at least after every 10 samples, and at the end of the analytical run).

9.2.2.2 These standards are analyzed, in part, to monitor the life and performance of the graphite tube. Lack of reproducibility or a significant change in the signal for the check standard may indicate that the graphite tube should be replaced.

9.2.2.3 The check standard may be either the mid-range calibration standard or the reference standard.

9.2.2.4 The results of the check standard shall agree within 10 percent of the expected value.

9.2.2.5 If not, terminate the analyses, correct the problem, recalibrate the instrument, and reanalyze all samples analyzed subsequent to the last acceptable check standard analysis.

9.2.3 GFAAS Calibration Blank.

9.2.3.1 Perform analysis of the calibration blank with the field samples as described in Section 11.4 (at least after every 10 samples, and at the end of the analytical run).

9.2.3.2 The calibration blank is analyzed to monitor the life and performance of the graphite tube as well as the existence of any memory effects. Lack of reproducibility or a significant change in the signal, may indicate that the graphite tube should be replaced.

9.2.3.3 The results of the calibration blank shall agree within three standard deviations of the mean blank value.

9.2.3.4 If not, analyze the calibration blank two more times and average the results. If the average is not within three standard deviations of the background mean, terminate the analyses, correct the problem, recalibrate, and reanalyze all samples analyzed subsequent to the last acceptable calibration blank analysis.

9.2.4 GFAAS Duplicate Sample Analysis. Perform one duplicate sample analysis for each compliance sample batch (3 runs).

9.2.4.1 A digested aliquot of the selected sample is processed and analyzed using the identical procedures that were used for the whole sample preparation and analytical efforts.

9.2.4.2 Duplicate sample analyses results incorporating duplicate digestions shall agree within 20 percent for sample results exceeding ten (10) times the detection limit.

9.2.4.3 Report the original analysis value for the sample and report the duplicate analysis value as the QC check value.

9.2.4.4 If agreement is not achieved, perform the duplicate analysis again. If agreement is not achieved the second time, perform corrective action to identify and correct the problem before analyzing the sample for a third time.

9.2.5 GFAAS Matrix Spiking.

9.2.5.1 Spiked samples shall be prepared and analyzed daily to ensure that (1) correct procedures are being followed, (2) there are no matrix effects and (3) all equipment is operating properly.

9.2.5.2 Cr spikes are added prior to any sample preparation.

9.2.5.3 Cr levels in the spiked sample should provide final solution concentrations that are within the linear portion of the calibration curve, as well as, at a concentration level at least: equal to that of the original sample; and, ten (10) times the detection limit.

9.2.5.4 Spiked sample recovery analyses should indicate a recovery for the Cr spike of between 75 and 125 percent.

9.2.5.5 If the recoveries for the Cr spiked samples do not meet the specified criteria, perform corrective action to identify and correct the problem prior to reanalyzing the samples.

9.2.6 GFAAS Method of Standard Additions.

9.2.6.1 Method of Standard Additions. Perform procedures in Section 5.4 of Method 12 (40 CFR Part 60, Appendix A)

9.2.6.2 Whenever sample matrix problems are suspected and standard/sample matrix matching is not possible or whenever a new sample matrix is being analyzed, perform referenced procedures to determine if the method of standard additions is necessary.

9.2.7 GFAAS Field Reagent Blank.

9.2.7.1 Analyze a minimum of one matrix-matched field reagent blank (Section 8.2.4) per sample batch to determine if contamination or memory effects are occurring.

9.2.7.2 If contamination or memory effects are observed, perform corrective action to identify and correct the problem before reanalyzing the samples.

9.2.8 Audit Sample Analysis.

9.2.8.1 When the method is used to analyze samples to demonstrate compliance with a source emission regulation, an audit sample must be analyzed, subject to availability.

9.2.8.2 Concurrently analyze the audit sample and the compliance samples in the same manner to evaluate the technique of the analyst and the standards preparation.

9.2.8.3 The same analyst, analytical reagents, and analytical system shall be used for the compliance samples and the audit sample. If this condition is met, duplicate auditing of subsequent compliance analyses for the same enforcement agency within a 30-day period is waived. An audit sample set may not be used to validate different sets of compliance samples under the jurisdiction of separate enforcement agencies, unless prior arrangements have been made with both enforcement agencies.

9.2.9 Audit Sample Results.

9.2.9.1 Calculate the audit sample concentrations and submit results using the instructions provided with the audit samples.

9.2.9.2 Report the results of the audit samples and the compliance determination samples along with their identification numbers, and the analyst's name to the responsible enforcement authority. Include this information with reports of any subsequent compliance analyses for the same enforcement authority during the 30-day period.

9.2.9.3 The concentrations of the audit samples obtained by the analyst shall agree within the values specified by the compliance auditor. If the specified range is not met, reanalyze the compliance and audit samples, and include initial and reanalysis values in the test report.

9.2.9.4 Failure to meet the specified range may require retests unless the audit problems are resolved. However, if the audit results do not affect the compliance or noncompliance status of the affected facility, the Administrator may waive the reanalysis requirement, further audits, or retests and accept the results of the compliance test. While steps are being taken to resolve audit analysis problems, the Administrator may also choose to use the data to determine the compliance or noncompliance status of the affected facility.

9.3 IC/PCR Quality Control.

9.3.1 IC/PCR Calibration Reference Standards.

9.3.1.1 Prepare a calibration reference standard at a concentration that is at or near the mid-point of the calibration curve using the same alkaline matrix as the calibration standards. This reference standard should be prepared from a different Cr stock solution than that used to prepare the calibration curve standards. The reference standard is used to verify the accuracy of the calibration curve.

9.3.1.2 The curve must be validated before sample analyses are performed. Prior to sample analysis, analyze at least one reference standard with an expected value within the calibration range.

9.3.1.3 The results of this reference standard analysis must be within 10 percent of the true value of the reference standard for the calibration curve to be considered valid.

9.3.2 IC/PCR Continuing Check Standard and Calibration Blank.

9.3.2.1 Perform analysis of the check standard and the calibration blank with the field samples as described in Section 11.6 (at least after every 10 samples, and at the end of the analytical run).

9.3.2.2 The result from the check standard must be within 10 percent of the expected value.

9.3.2.3 If the 10 percent criteria is exceeded, excessive drift and/or instrument degradation may have occurred, and must be corrected before further analyses can be performed.

9.3.2.4 The results of the calibration blank analyses must agree within three standard deviations of the mean blank value.

9.3.2.5 If not, analyze the calibration blank two more times and average the results.

9.3.2.6 If the average is not within three standard deviations of the background mean, terminate the analyses, correct the problem, recalibrate, and reanalyze all samples analyzed subsequent to the last acceptable calibration blank analysis.

9.3.3 IC/PCR Duplicate Sample Analysis.

9.3.3.1 Perform one duplicate sample analysis for each compliance sample batch (3 runs).

9.3.3.2 An aliquot of the selected sample is prepared and analyzed using procedures identical to those used for the emission samples (for example, filtration and/or, if necessary, preconcentration).

9.3.3.3 Duplicate sample injection results shall agree within 10 percent for sample results exceeding ten (10) times the detection limit.

9.3.3.4 Report the original analysis value for the sample and report the duplicate analysis value as the QC check value.

9.3.3.5 If agreement is not achieved, perform the duplicate analysis again.

9.3.3.6 If agreement is not achieved the second time, perform corrective action to identify and correct the problem prior to analyzing the sample for a third time.

9.3.4 ICP/PCR Matrix Spiking. Spiked samples shall be prepared and analyzed with each sample set to ensure that there are no matrix effects, that samples and standards have been matrix-matched, and that the equipment is operating properly.

9.3.4.1 Spiked sample recovery analysis should indicate a recovery of the Cr^{+6} spike between 75 and 125 percent.

9.3.4.2 The spiked sample concentration should be within the linear portion of the calibration curve and should be equal to or greater than the concentration of the original sample. In addition, the spiked sample concentration should be at least ten (10) times the detection limit.

9.3.4.3 If the recoveries for the Cr^{+6} spiked samples do not meet the specified criteria, perform corrective action to identify and correct the problem prior to reanalyzing the samples.

9.3.5 IC/PCR Field Reagent Blank.

9.3.5.1 Analyze a minimum of one matrix-matched field reagent blank (Section 8.2.4) per sample batch to determine if contamination or memory effects are occurring.

9.3.5.2 If contamination or memory effects are observed, perform corrective action to identify and correct the problem before reanalyzing the samples.

9.3.6 Audit Sample Analysis.

9.3.6.1 When the method is used to analyze samples to demonstrate compliance with source emission regulation, an audit sample must be analyzed, subject to availability.

9.3.6.2 Concurrently analyze the audit sample and the compliance samples in the same manner to evaluate the technique of the analyst and the standards preparation.

9.3.6.3 The same analyst, analytical reagents, and analytical system shall be used for the compliance samples and the audit sample. If this condition is met, duplicate auditing of subsequent compliance analyses for the same enforcement agency within a 30-day period is waived. An audit sample set may not be used to validate different sets of compliance samples under the jurisdiction of separate enforcement agencies, unless prior arrangements have been made with both enforcement agencies.

9.3.7 Audit Sample Results.

9.3.7.1 Calculate the audit sample concentrations and submit results using the instructions provided with the audit samples.

9.3.7.2 Report the results of the audit samples and the compliance determination samples along with their identification numbers, and the analyst's name to the responsible enforcement authority. Include this information with reports of any subsequent compliance analyses for the same enforcement authority during the 30-day period.

9.3.7.3 The concentrations of the audit samples obtained by the analyst shall agree within the values specified by the compliance auditor. If the specified range is not met, reanalyze the compliance and audit samples, and include initial and reanalysis values in the test report.

9.3.7.4 Failure to meet the specified range may require retests unless the audit problems are resolved. However, if the audit results do not affect the compliance or noncompliance status of

the affected facility, the Administrator may waive the reanalysis requirement, further audits, or retests and accept the results of the compliance test. While steps are being taken to resolve audit analysis problems, the Administrator may also choose to use the data to determine the compliance or noncompliance status of the affected facility.

10.0 Calibration and Standardization

10.1 Sampling Train Calibration. Perform calibrations described in Method 5, (40 CFR Part 60, Appendix A). The alternate calibration procedures described in Method 5, may also be used.

10.2 ICP Calibration.

10.2.1 Calibrate the instrument according to the instrument manufacturer's recommended procedures, using a calibration blank and three standards for the initial calibration.

10.2.2 Calibration standards should be prepared fresh daily, as described in Section 7.3.8. Be sure that samples and calibration standards are matrix matched. Flush the system with the calibration blank between each standard.

10.2.3 Use the average intensity of multiple exposures (3 or more) for both standardization and sample analysis to reduce random error.

10.2.4 Employing linear regression, calculate the correlation coefficient .

10.2.5 The correlation coefficient must equal or exceed 0.995.

10.2.6 If linearity is not acceptable, prepare and rerun another set of calibration standards or reduce the range of the calibration standards, as necessary.

10.3 GFAAS Calibration.

10.3.1 For instruments that measure directly in concentration, set the instrument software to display the correct concentration, if applicable.

10.3.2 Curve must be linear in order to correctly perform the method of standard additions which is customarily performed automatically with most instrument computer-based data systems.

10.3.3 The calibration curve (direct calibration or standard additions) must be prepared daily with a minimum of a calibration blank and three standards that are prepared fresh daily.

10.3.4 The calibration curve acceptance criteria must equal or exceed 0.995.

10.3.5 If linearity is not acceptable, prepare and rerun another set of calibration standards or reduce the range of calibration standards, as necessary.

10.4 IC/PCR Calibration.

10.4.1 Prepare a calibration curve using the calibration blank and three calibration standards prepared fresh daily as described in Section 7.3.8.

10.4.2 The calibration curve acceptance criteria must equal or exceed 0.995.

10.4.3 If linearity is not acceptable, remake and/or rerun the calibration standards. If the calibration curve is still unacceptable, reduce the range of the curve.

10.4.4 Analyze the standards with the field samples as described in Section 11.6.

11.0 Analytical Procedures

Note: The method determines the chromium concentration in µg Cr/mL. It is important that the analyst measure the field sample volume prior to analyzing the sample. This will allow for conversion of µg Cr/mL to µg Cr/sample.

11.1 ICP Sample Preparation.

11.1.1 The ICP analysis is performed directly on the alkaline impinger solution; acid digestion is not necessary, provided the samples and standards are matrix matched.

11.1.2 The ICP analysis should only be employed when the solution analyzed has a Cr concentration greater than 35 µg/L or five times the method detection limit as determined according to Appendix B in 40 CFR Part 136 or by other commonly accepted analytical procedures.

11.2 ICP Sample Analysis.

11.2.1 The ICP analysis is applicable for the determination of total chromium only.

11.2.2 ICP Blanks. Two types of blanks are required for the ICP analysis.

11.2.2.1 Calibration Blank. The calibration blank is used in establishing the calibration curve. For the calibration blank, use either 0.1 N NaOH or 0.1 N $NaHCO_3$, whichever is used for the impinger absorbing solution. The calibration blank can be prepared fresh in the laboratory; it does not have to be prepared from the same batch of solution that was used in the field. A sufficient quantity should be prepared to flush the system between standards and samples.

11.2.2.2 Field Reagent Blank. The field reagent blank is collected in the field during the testing program. The field reagent blank (Section 8.2.4) is an aliquot of the absorbing solution prepared in Section 7.1.2. The reagent blank is used to assess possible contamination resulting from sample processing.

11.2.3 ICP Instrument Adjustment.

11.2.3.1 Adjust the ICP instrument for proper operating parameters including wavelength, background correction settings (if necessary), and interfering element correction settings (if necessary).

11.2.3.2 The instrument must be allowed to become thermally stable before beginning measurements (usually requiring at least 30 min of operation prior to calibration). During this warmup period, the optical calibration and torch position optimization may be performed (consult the operator's manual).

11.2.4 ICP Instrument Calibration.

11.2.4.1 Calibrate the instrument according to the instrument manufacturer's recommended procedures, and the procedures specified in Section 10.2.

11.2.4.2 Prior to analyzing the field samples, reanalyze the highest calibration standard as if it were a sample.

11.2.4.3 Concentration values obtained should not deviate from the actual values or from the established control limits by more than 5 percent, whichever is lower (see Sections 9.1 and 10.2).

11.2.4.4 If they do, follow the recommendations of the instrument manufacturer to correct the problem.

11.2.5 ICP Operational Quality Control Procedures.

11.2.5.1 Flush the system with the calibration blank solution for at least 1 min before the analysis of each sample or standard.

11.2.5.2 Analyze the continuing check standard and the calibration blank after each batch of 10 samples.

11.2.5.3 Use the average intensity of multiple exposures for both standardization and sample analysis to reduce random error.

11.2.6 ICP Sample Dilution.

11.2.6.1 Dilute and reanalyze samples that are more concentrated than the linear calibration limit or use an alternate, less sensitive Cr wavelength for which quality control data have already been established.

11.2.6.2 When dilutions are performed, the appropriate factors must be applied to sample measurement results.

11.2.7 Reporting Analytical Results. All analytical results should be reported in µg Cr/mL using three significant figures. Field sample volumes (mL) must be reported also.

11.3 GFAAS Sample Preparation.

11.3.1 GFAAS Acid Digestion. An acid digestion of the alkaline impinger solution is required for the GFAAS analysis.

11.3.1.1 In a beaker, add 10 mL of concentrated HNO_3 to a 100 mL sample aliquot that has been well mixed. Cover

the beaker with a watch glass. Place the beaker on a hot plate and reflux the sample to near dryness. Add another 5 mL of concentrated HNO_3 to complete the digestion. Again, carefully reflux the sample volume to near dryness. Rinse the beaker walls and watch glass with reagent water.

11.3.1.2 The final concentration of HNO_3 in the solution should be 1 percent (v/v).

11.3.1.3 Transfer the digested sample to a 50-mL volumetric flask. Add 0.5 mL of concentrated HNO_3 and 1 mL of the 10 µg/mL of $Ca(NO_3)_2$. Dilute to 50 mL with reagent water.

11.3.2 HNO_3 Concentration. A different final volume may be used based on the expected Cr concentration, but the HNO_3 concentration must be maintained at 1 percent (v/v).

11.4 GFAAS Sample Analysis.

11.4.1 The GFAAS analysis is applicable for the determination of total chromium only.

11.4.2 GFAAS Blanks. Two types of blanks are required for the GFAAS analysis.

11.4.2.1 Calibration Blank. The 1.0 percent HNO_3 is the calibration blank which is used in establishing the calibration curve.

11.4.2.2 Field Reagent Blank. An aliquot of the 0.1 N NaOH solution or the 0.1 N $NaHCO_3$ prepared in Section 7.1.2 is collected for the field reagent blank. The field reagent blank is used to assess possible contamination resulting from processing the sample.

11.4.2.2.1 The reagent blank must be subjected to the entire series of sample preparation and analytical procedures, including the acid digestion.

11.4.2.2.2 The reagent blank's final solution must contain the same acid concentration as the sample solutions.

11.4.3 GFAAS Instrument Adjustment.

11.4.3.1 The 357.9 nm wavelength line shall be used.

11.4.3.2 Follow the manufacturer's instructions for all other spectrophotometer operating parameters.

11.4.4 Furnace Operational Parameters. Parameters suggested by the manufacturer should be employed as guidelines.

11.4.4.1 Temperature-sensing mechanisms and temperature controllers can vary between instruments and/or with time; the validity of the furnace operating parameters must be periodically confirmed by systematically altering the furnace parameters while analyzing a standard. In this manner, losses of analyte due to higher-than-necessary temperature settings or losses in sensitivity due to less than optimum settings can be minimized.

11.4.4.2 Similar verification of furnace operating parameters may be required for complex sample matrices (consult instrument manual for additional information). Calibrate the GFAAS system following the procedures specified in Section 10.3.

11.4.5 GFAAS Operational Quality Control Procedures.

11.4.5.1 Introduce a measured aliquot of digested sample into the furnace and atomize.

11.4.5.2 If the measured concentration exceeds the calibration range, the sample should be diluted with the calibration blank solution (1.0 percent HNO_3) and reanalyzed.

11.4.5.3 Consult the operator's manual for suggested injection volumes. The use of multiple injections can improve accuracy and assist in detecting furnace pipetting errors.

11.4.5.4 Analyze a minimum of one matrix-matched reagent blank per sample batch to determine if contamination or any memory effects are occurring.

11.4.5.5 Analyze a calibration blank and a continuing check standard after approximately every batch of 10 sample injections.

11.4.6 GFAAS Sample Dilution.

11.4.6.1 Dilute and reanalyze samples that are more concentrated than the instrument calibration range.

11.4.6.2 If dilutions are performed, the appropriate factors must be applied to sample measurement results.

11.4.7 Reporting Analytical Results.

11.4.7.1 Calculate the Cr concentrations by the method of standard additions (see operator's manual) or, from direct calibration. All dilution and/or concentration factors must be used when calculating the results.

11.4.7.2 Analytical results should be reported in µg Cr/mL using three significant figures. Field sample volumes (mL) must be reported also.

11.5 IC/PCR Sample Preparation.

11.5.1 Sample pH. Measure and record the sample pH prior to analysis.

11.5.2 Sample Filtration. Prior to preconcentration and/or analysis, filter all field samples through a 0.45-µm filter. The filtration step should be conducted just prior to sample injection/analysis.

11.5.2.1 Use a portion of the sample to rinse the syringe filtration unit and acetate filter and then collect the required volume of filtrate.

11.5.2.2 Retain the filter if total Cr is to be determined also.

11.5.3 Sample Preconcentration (older instruments).

11.5.3.1 For older instruments, a preconcentration system may be used in conjunction with the IC/PCR to increase sensitivity for trace levels of Cr^{+6}.

11.5.3.2 The preconcentration is accomplished by selectively retaining the analyte on a solid absorbent, followed by removal of the analyte from the absorbent (consult instrument manual).

11.5.3.3 For a manual system, position the injection valve so that the eluent displaces the concentrated Cr^{+6} sample, transferring it from the preconcentration column and onto the IC anion separation column.

11.6 IC/PCR Sample Analyses.

11.6.1 The IC/PCR analysis is applicable for hexavalent chromium measurements only.

11.6.2 IC/PCR Blanks. Two types of blanks are required for the IC/PCR analysis.

11.6.2.1 Calibration Blank. The calibration blank is used in establishing the analytical curve. For the calibration blank, use either 0.1 N NaOH or 0.1 N $NaHCO_3$, whichever is used for the impinger solution. The calibration blank can be prepared fresh in the laboratory; it does not have to be prepared from the same batch of absorbing solution that is used in the field.

11.6.2.2 Field Reagent Blank. An aliquot of the 0.1 N NaOH solution or the 0.1 N $NaHCO_3$ solution prepared in Section 7.1.2 is collected for the field reagent blank. The field reagent blank is used to assess possible contamination resulting from processing the sample.

11.6.3 Stabilized Baseline. Prior to sample analysis, establish a stable baseline with the detector set at the required attenuation by setting the eluent and post-column reagent flow rates according to the manufacturers recommendations.

Note: As long as the ratio of eluent flow rate to PCR flow rate remains constant, the standard curve should remain linear. Inject a sample of reagent water to ensure that no Cr^{+6} appears in the water blank.

11.6.4 Sample Injection Loop. Size of injection loop is based on standard/sample concentrations and the selected attenuator setting.

11.6.4.1 A 50-µL loop is normally sufficient for most higher concentrations.

11.6.4.2 The sample volume used to load the injection loop should be at least 10 times the loop size so that all tubing in contact with the sample is thoroughly flushed with the new sample to prevent cross contamination.

11.6.5 IC/PCR Instrument Calibration.

11.6.5.1 First, inject the calibration standards prepared, as described in

Section 7.3.8 to correspond to the appropriate concentration range, starting with the lowest standard first.

11.6.5.2 Check the performance of the instrument and verify the calibration using data gathered from analyses of laboratory blanks, calibration standards, and a quality control sample.

11.6.5.3 Verify the calibration by analyzing a calibration reference standard. If the measured concentration exceeds the established value by more than 10 percent, perform a second analysis. If the measured concentration still exceeds the established value by more than 10 percent, terminate the analysis until the problem can be identified and corrected.

11.6.6 IC/PCR Instrument Operation.

11.6.6.1 Inject the calibration reference standard (as described in Section 9.3.1), followed by the field reagent blank (Section 8.2.4), and the field samples.

11.6.6.1.1 Standards (and QC standards) and samples are injected into the sample loop of the desired size (use a larger size loop for greater sensitivity). The Cr^{+6} is collected on the resin bed of the column.

11.6.6.1.2 After separation from other sample components, the Cr^{+6} forms a specific complex in the post-column reactor with the DPC reaction solution, and the complex is detected by visible absorbance at a maximum wavelength of 540 nm.

11.6.6.1.3 The amount of absorbance measured is proportional to the concentration of the Cr^{+6} complex formed.

11.6.6.1.4 The IC retention time and the absorbance of the Cr^{+6} complex with known Cr^{+6} standards analyzed under identical conditions must be compared to provide both qualitative and quantitative analyses.

11.6.6.1.5 If a sample peak appears near the expected retention time of the Cr^{+6} ion, spike the sample according to Section 9.3.4 to verify peak identity.

11.6.7 IC/PCR Operational Quality Control Procedures.

11.6.7.1 Samples should be at a pH ≥8.5 for NaOH and ≥8.0 if using $NaHCO_3$; document any discrepancies.

11.6.7.2 Refrigerated samples should be allowed to equilibrate to ambient temperature prior to preparation and analysis.

11.6.7.3 Repeat the injection of the calibration standards at the end of the analytical run to assess instrument drift. Measure areas or heights of the Cr^{+6}/DPC complex chromatogram peaks.

11.6.7.4 To ensure the precision of the sample injection (manual or autosampler), the response for the second set of injected standards must be within 10 percent of the average response.

11.6.7.5 If the 10 percent criteria duplicate injection cannot be achieved, identify the source of the problem and rerun the calibration standards.

11.6.7.6 Use peak areas or peak heights from the injections of calibration standards to generate a linear calibration curve. From the calibration curve, determine the concentrations of the field samples.

11.6.8 IC/PCR Sample Dilution.

11.6.8.1 Samples having concentrations higher than the established calibration range must be diluted into the calibration range and re-analyzed.

11.6.8.2 If dilutions are performed, the appropriate factors must be applied to sample measurement results.

11.6.9 Reporting Analytical Results. Results should be reported in μg Cr^{+6}/mL using three significant figures. Field sample volumes (mL) must be reported also.

12.0 Data Analysis and Calculations

12.1 Pretest Calculations.

12.1.1 Pretest Protocol (Site Test Plan).

12.1.1.1 The pretest protocol should define and address the test data quality objectives (DQOs), with all assumptions, that will be required by the end user (enforcement authority); what data are needed? why are the data needed? how will the data be used? what are method detection limits? and what are estimated target analyte levels for the following test parameters.

12.1.1.1.1 Estimated source concentration for total chromium and/or Cr^{+6}.

12.1.1.1.2 Estimated minimum sampling time and/or volume required to meet method detection limit requirements (Appendix B 40 CFR Part 136) for measurement of total chromium and/or Cr^{+6}.

12.1.1.1.3 Demonstrate that planned sampling parameters will meet DQOs. The protocol must demonstrate that the planned sampling parameters calculated by the tester will meet the needs of the source and the enforcement authority.

12.1.1.2 The pre-test protocol should include information on equipment, logistics, personnel, process operation, and other resources necessary for an efficient and coordinated test.

12.1.1.3 At a minimum, the pre-test protocol should identify and be approved by the source, the tester, the analytical laboratory, and the regulatory enforcement authority. The tester should not proceed with the compliance testing before obtaining approval from the enforcement authority.

12.1.2 Post Test Calculations.

12.1.2.1 Perform the calculations, retaining one extra decimal figure beyond that of the acquired data. Round off figures after final calculations.

12.1.2.2 Nomenclature.

C_S = Concentration of Cr in sample solution, μg Cr/mL.

C_{cr} = Concentration of Cr in stack gas, dry basis, corrected to standard conditions, mg/dscm.

D = Digestion factor, dimension less.

F = Dilution factor, dimension less.

M_{Cr} = Total Cr in each sample, μg.

V_{ad} = Volume of sample aliquot after digestion, mL.

V_{af} = Volume of sample aliquot after dilution, mL.

V_{bd} = Volume of sample aliquot submitted to digestion, mL.

V_{bf} = Volume of sample aliquot before dilution, mL.

V_{mL} = Volume of impinger contents plus rinses, mL.

$V_{m(std)}$ = Volume of gas sample measured by the dry gas meter, corrected to standard conditions, dscm.

12.1.2.3 Dilution Factor. The dilution factor is the ratio of the volume of sample aliquot after dilution to the volume before dilution. This ratio is given by the following equation:

$$F = \frac{V_{af}}{V_{bf}} \qquad \text{Eq. 306-1}$$

12.1.2.4 Digestion Factor. The digestion factor is the ratio of the volume of sample aliquot after digestion to the volume before digestion. This ratio is given by Equation 306–2.

$$D = \frac{V_{ad}}{V_{bd}} \qquad \text{Eq. 306-2}$$

12.1.2.5 Total Cr in Sample. Calculate MCr, the total µg Cr in each sample, using the following equation:

$$M_{cr} = V_{mL} \times C_S \times F \times D \qquad \text{Eq. 306-3}$$

12.1.2.6 Average Dry Gas Meter Temperature and Average Orifice Pressure Drop. Same as Method 5.

12.1.2.7 Dry Gas Volume, Volume of Water Vapor, Moisture Content. Same as Method 5.

12.1.2.8 Cr Emission Concentration (C_{Cr}). Calculate C_{Cr}, the Cr concentration in the stack gas, in mg/dscm on a dry basis, corrected to standard conditions using the following equation:

$$C_{Cr} = \frac{M_{Cr}}{V_{m(std)}} \times 10^{-3} \frac{mg}{\mu g} \qquad \text{Eq. 306-4}$$

12.1.2.9 Isokinetic Variation, Acceptable Results. Same as Method 5.

13.0 Method Performance

13.1 Range. The recommended working range for all of the three analytical techniques starts at five times the analytical detection limit (see also Section 13.2.2). The upper limit of all three techniques can be extended indefinitely by appropriate dilution.

13.2 Sensitivity.

13.2.1 Analytical Sensitivity. The estimated instrumental detection limits listed are provided as a guide for an instrumental limit. The actual method detection limits are sample and instrument dependent and may vary as the sample matrix varies.

13.2.1.2 ICP Analytical Sensitivity. The minimum estimated detection limits for ICP, as reported in Method 6010A and the recently revised Method 6010B of SW–846 (Reference 1), are 7.0 µg Cr/L and 4.7 µg Cr/L, respectively.

13.2.1.3 GFAAS Analytical Sensitivity. The minimum estimated detection limit for GFAAS, as reported in Methods 7000A and 7191 of SW–846 (Reference 1), is 1 µg Cr/L.

13.2.1.4 IC/PCR Analytical Sensitivity. The minimum detection limit for IC/PCR with a preconcentrator, as reported in Methods 0061 and 7199 of SW–846 (Reference 1), is 0.05 µg Cr^{+6}/L.

1.3.2.1.5 Determination of Detection Limits. The laboratory performing the Cr^{+6} measurements must determine the method detection limit on a quarterly basis using a suitable procedure such as that found in 40 CFR, Part 136, Appendix B. The determination should be made on samples in the appropriate alkaline matrix. Normally this involves the preparation (if applicable) and consecutive measurement of seven (7) separate aliquots of a sample with a concentration <5 times the expected detection limit. The detection limit is 3.14 times the standard deviation of these results.

13.2.2 In-stack Sensitivity. The in-stack sensitivity depends upon the analytical detection limit, the volume of stack gas sampled, the total volume of the impinger absorbing solution plus the rinses, and, in some cases, dilution or concentration factors from sample preparation. Using the analytical detection limits given in Sections 13.2.1.1, 13.2.1.2, and 13.2.1.3; a stack gas sample volume of 1.7 dscm; a total liquid sample volume of 500 mL; and the digestion concentration factor of 1/2 for the GFAAS analysis; the corresponding in-stack detection limits are 0.0014 mg Cr/dscm to 0.0021 mg Cr/dscm for ICP, 0.00015 mg Cr/dscm for GFAAS, and 0.000015 mg Cr^{+6}/dscm for IC/PCR with preconcentration.

Note: It is recommended that the concentration of Cr in the analytical solutions be at least five times the analytical detection limit to optimize sensitivity in the analyses. Using this guideline and the same assumptions for impinger sample volume, stack gas sample volume, and the digestion concentration factor for the GFAAS analysis (500 mL,1.7 dscm, and 1/2, respectively), the recommended minimum stack concentrations for optimum sensitivity are 0.0068 mg Cr/dscm to 0.0103 mg Cr/dscm for ICP, 0.00074 mg Cr/dscm for GFAAS, and 0.000074 mg Cr^{+6}/dscm for IC/PCR with preconcentration. If required, the in-stack detection limits can be improved by either increasing the stack gas sample volume, further reducing the volume of the digested sample for GFAAS, improving the analytical detection limits, or any combination of the three.

13.3 Precision.

13.3.1 The following precision data have been reported for the three analytical methods. In each case, when the sampling precision is combined with the reported analytical precision, the resulting overall precision may decrease.

13.3.2 Bias data is also reported for GFAAS.

13.4 ICP Precision.

13.4.1 As reported in Method 6010B of SW–846 (Reference 1), in an EPA round-robin Phase 1 study, seven laboratories applied the ICP technique to acid/distilled water matrices that had been spiked with various metal concentrates. For true values of 10, 50, and 150 µg Cr/L; the mean reported values were 10, 50, and 149 µg Cr/L; and the mean percent relative standard deviations were 18, 3.3, and 3.8 percent, respectively.

13.4.2 In another multi laboratory study cited in Method 6010B, a mean relative standard of 8.2 percent was reported for an aqueous sample concentration of approximately 3750 µg Cr/L.

13.5 GFAAS Precision. As reported in Method 7191 of SW–846 (Reference 1), in a single laboratory (EMSL), using Cincinnati, Ohio tap water spiked at concentrations of 19, 48, and 77 µg Cr/L, the standard deviations were ±0.1, ±0.2, and ±0.8, respectively. Recoveries at these levels were 97 percent, 101 percent, and 102 percent, respectively.

13.6 IC/PCR Precision. As reported in Methods 0061 and 7199 of SW–846 (Reference 1), the precision of IC/PCR with sample preconcentration is 5 to 10 percent. The overall precision for

sewage sludge incinerators emitting 120 ng/dscm of Cr^{+6} and 3.5 μg/dscm of total Cr was 25 percent and 9 percent, respectively; and for hazardous waste incinerators emitting 300 ng/dscm of C^{+6} the precision was 20 percent.

14.0 Pollution Prevention

14.1 The only materials used in this method that could be considered pollutants are the chromium standards used for instrument calibration and acids used in the cleaning of the collection and measurement containers/labware, in the preparation of standards, and in the acid digestion of samples. Both reagents can be stored in the same waste container.

14.2 Cleaning solutions containing acids should be prepared in volumes consistent with use to minimize the disposal of excessive volumes of acid.

14.3 To the extent possible, the containers/vessels used to collect and prepare samples should be cleaned and reused to minimize the generation of solid waste.

15.0 Waste Management

15.1 It is the responsibility of the laboratory and the sampling team to comply with all federal, state, and local regulations governing waste management, particularly the discharge regulations, hazardous waste identification rules, and land disposal restrictions; and to protect the air, water, and land by minimizing and controlling all releases from field operations.

15.2 For further information on waste management, consult The Waste Management Manual for Laboratory Personnel and Less is Better—Laboratory Chemical Management for Waste Reduction, available from the American Chemical Society's Department of Government Relations and Science Policy, 1155 16th Street NW, Washington, DC 20036.

16.0 References

1. ''Test Methods for Evaluating Solid Waste, Physical/Chemical Methods, SW–846, Third Edition,'' as amended by Updates I, II, IIA, IIB, and III. Document No. 955–001–000001. Available from Superintendent of Documents, U.S. Government Printing Office, Washington, DC, November 1986.

2. Cox, X.B., R.W. Linton, and F.E. Butler. Determination of Chromium Speciation in Environmental Particles—A Multi-technique Study of Ferrochrome Smelter Dust. Accepted for publication in Environmental Science and Technology.

3. Same as Section 17.0 of Method 5, References 2, 3, 4, 5, and 7.

4. California Air Resources Board, ''Determination of Total Chromium and Hexavalent Chromium Emissions from Stationary Sources.'' Method 425, September 12, 1990.

5. *The Merck Index.* Eleventh Edition. Merck & Co., Inc., 1989.

6. Walpole, R.E., and R.H. Myers. ''Probability and Statistics for Scientists and Engineering.'' 3rd Edition. MacMillan Publishing Co., NewYork, N.Y., 1985.

BILLING CODE 6560–50–C

17.0 Tables, Diagrams, Flowcharts, and Validation Data

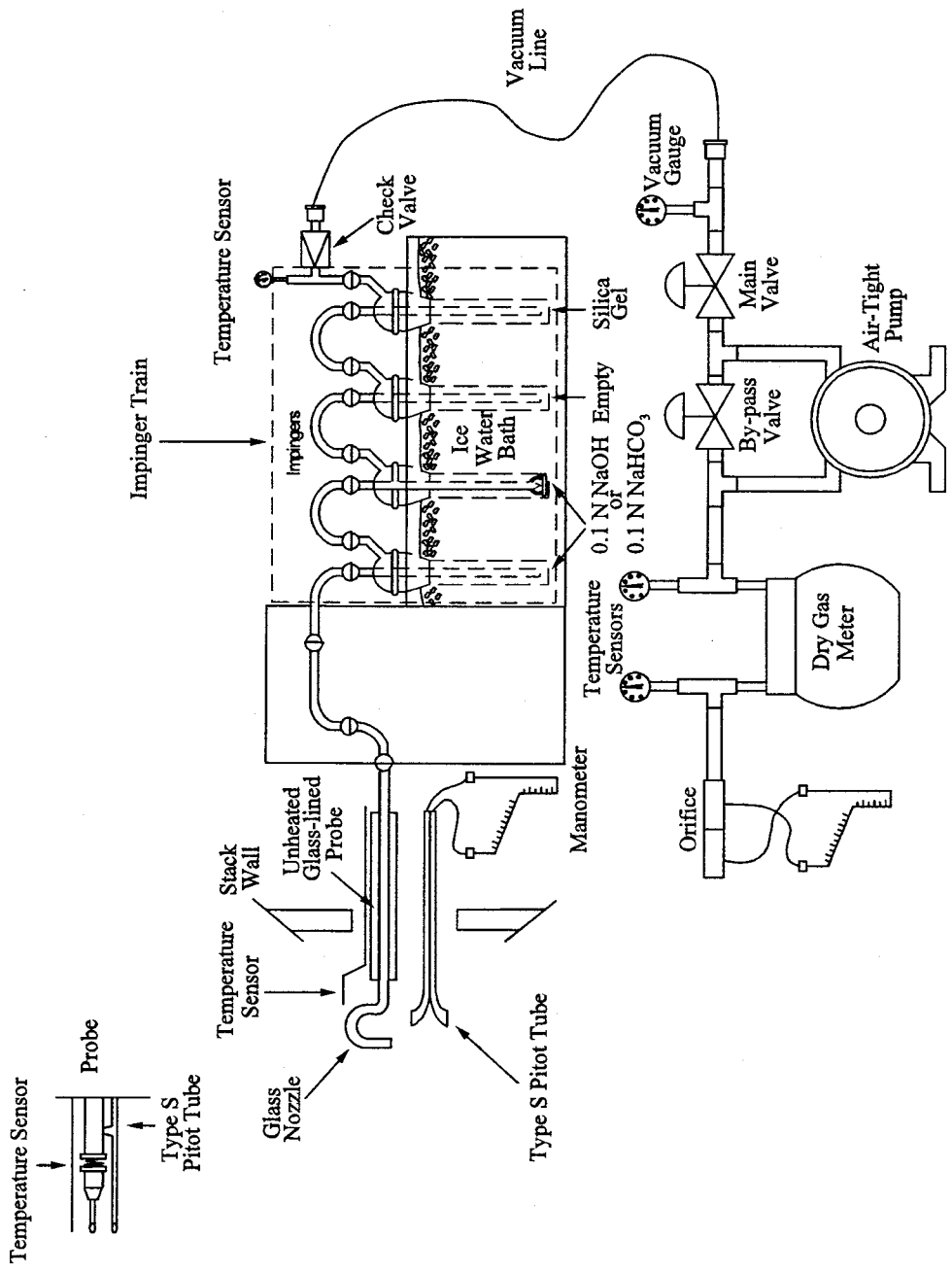

Figure 306-1. Chromium Sampling Train.

Plant _____
Location _____
Operator _____
Date _____
Run No. _____
Sample box No. _____
Meter box No. _____
Meter $\Delta H@$ _____
C factor _____
Pitot tube coefficient, C_p _____

SCHEMATIC OF STACK CROSS SECTION

Ambient temperature _____
Barometric pressure _____
Assumed moisture, % _____
Probe length, (ft.) _____
Nozzle identification No. _____
Average calibrated nozzle diameter, (in.) _____
Leak rate, (cfm) _____
Static pressure, (in. Hg) _____

Traverse point number	Sampling time	Vacuum	Stack temperature	Velocity head	Pressure differential across orifice meter	Gas meter reading	Gas sample temperature at dry gas meter		Temperature of gas leaving condenser or last impinger
							Inlet	Outlet	
	min.	(in. Hg)	(T_s) (°F)	(ΔP_s) (in. H_2O)	(in. H_2O)	(ft^3)	(°F)	(°F)	(°F)
Total							Avg.	Avg.	
Average							Avg.		

Figure 306-2. Chromium Field Data Sheet.

BILLING CODE 6560–50–C

Method 306A—Determination of Chromium Emissions From Decorative and Hard Chromium Electroplating and Chromium Anodizing Operations

Note: This method does not include all of the specifications (*e.g.,* equipment and supplies) and procedures (*e.g.,* sampling and analytical) essential to its performance. Some material is incorporated by reference from other methods in 40 CFR Part 60, Appendix A and in this part. Therefore, to obtain reliable results, persons using this method should have a thorough knowledge of at least Methods 5 and 306.

1.0 Scope and Application

1.1 Analyte. Chromium. CAS Number (7440–47–3).

1.2 Applicability.

1.2.1 This method applies to the determination of chromium (Cr) in emissions from decorative and hard chromium electroplating facilities, chromium anodizing operations, and continuous chromium plating at iron and steel facilities. The method is less expensive and less complex to conduct than Method 306. Correctly applied, the precision and bias of the sample results should be comparable to those obtained with the isokinetic Method 306. This method is applicable for the determination of air emissions under nominal ambient moisture, temperature, and pressure conditions.

1.2.2 The method is also applicable to electroplating and anodizing sources controlled by wet scrubbers.

1.3 Data Quality Objectives.

1.3.1 Pretest Protocol.

1.3.1.1 The pretest protocol should define and address the test data quality objectives (DQOs), with all assumptions, that will be required by the end user (enforcement authority); what data are needed? why are the data needed? how will data be used? what are method detection limits? and what are estimated target analyte levels for the following test parameters.

1.3.1.1.1 Estimated source concentration for total chromium and/or Cr^{+6}.

1.3.1.1.2 Estimated minimum sampling time and/or volume required to meet method detection limit requirements (Appendix B 40 CFR Part 136) for measurement of total chromium and/or Cr^{+6}.

1.3.1.1.3 Demonstrate that planned sampling parameters will meet DQOs. The protocol must demonstrate that the planned sampling parameters calculated by the tester will meet the needs of the source and the enforcement authority.

1.3.1.2 The pre-test protocol should include information on equipment, logistics, personnel, process operation, and other resources necessary for an efficient and coordinated performance test.

1.3.1.3 At a minimum, the pre-test protocol should identify and be approved by the source, the tester, the analytical laboratory, and the regulatory enforcement authority. The tester should not proceed with the compliance testing before obtaining approval from the enforcement authority.

2.0 Summary of Method

2.1 Sampling.

2.1.1 An emission sample is extracted from the source at a constant sampling rate determined by a critical orifice and collected in a sampling train composed of a probe and impingers. The proportional sampling time at the cross sectional traverse points is varied according to the stack gas velocity at each point. The total sample time must be at least two hours.

2.1.2 The chromium emission concentration is determined by the same analytical procedures described in Method 306: inductively-coupled plasma emission spectrometry (ICP), graphite furnace atomic absorption spectrometry (GFAAS), or ion chromatography with a post-column reactor (IC/PCR).

2.1.2.1 Total chromium samples with high chromium concentrations (≥35 μg/L) may be analyzed using inductively coupled plasma emission spectrometry (ICP) at 267.72 nm.

Note: The ICP analysis is applicable for this method only when the solution analyzed has a Cr concentration greater than or equal to 35 μg/L or five times the method detection limit as determined according to Appendix B in 40 CFR Part 136.

2.1.2.2 Alternatively, when lower total chromium concentrations (<35 μg/L) are encountered, a portion of the alkaline sample solution may be digested with nitric acid and analyzed by graphite furnace atomic absorption spectroscopy (GFAAS) at 357.9 nm.

2.1.2.3 If it is desirable to determine hexavalent chromium (Cr^{+6}) emissions, the samples may be analyzed using an ion chromatograph equipped with a post-column reactor (IC/PCR) and a visible wavelength detector. To increase sensitivity for trace levels of Cr^{+6}, a preconcentration system may be used in conjunction with the IC/PCR.

3.0 Definitions

3.1 *Total Chromium*—measured chromium content that includes both major chromium oxidation states (Cr+3, Cr+6).

3.2 *May*—Implies an optional operation.

3.3 *Digestion*—The analytical operation involving the complete (or nearly complete) dissolution of the sample in order to ensure the complete solubilization of the element (analyte) to be measured.

3.4 *Interferences*—Physical, chemical, or spectral phenomena that may produce a high or low bias in the analytical result.

3.5 *Analytical System*—All components of the analytical process including the sample digestion and measurement apparatus.

3.6 *Sample Recovery*—The quantitative transfer of sample from the collection apparatus to the sample preparation (digestion, etc.) apparatus. This term should not be confused with analytical recovery.

4.0 Interferences

4.1 Same as in Method 306, Section 4.0.

5.0 Safety

5.1 Disclaimer. This method may involve hazardous materials, operations, and equipment. This test method does not purport to address all of the safety issues associated with its use. It is the responsibility of the user to establish appropriate safety and health practices and to determine the applicability of regulatory limitations prior to performing this test method.

5.2 Chromium and some chromium compounds have been listed as carcinogens although Chromium (III) compounds show little or no toxicity. Chromium is a skin and respiratory irritant.

6.0 Equipment and Supplies

Note: Mention of trade names or specific products does not constitute endorsement by the Environmental Protection Agency.

6.1 Sampling Train. A schematic of the sampling train is shown in Figure 306A–1. The individual components of the train are available commercially, however, some fabrication and assembly are required.

6.1.1 Probe Nozzle/Tubing and Sheath.

6.1.1.1 Use approximately 6.4-mm (¼-in.) inside diameter (ID) glass or rigid plastic tubing approximately 20 cm (8 in.) in length with a short 90 degree bend at one end to form the sampling nozzle. Grind a slight taper on the nozzle end before making the bend. Attach the nozzle to flexible tubing of sufficient length to enable collection of a sample from the stack.

6.1.1.2 Use a straight piece of larger diameter rigid tubing (such as metal conduit or plastic water pipe) to form a sheath that begins about 2.5 cm (1 in.) from the 90° bend on the nozzle and

encases and supports the flexible tubing.

6.1.2 Type S Pitot Tube. Same as Method 2, Section 6.1 (40 CFR Part 60, Appendix A).

6.1.3 Temperature Sensor.

6.1.3.1 A thermocouple, liquid-filled bulb thermometer, bimetallic thermometer, mercury-in-glass thermometer, or other sensor capable of measuring temperature to within 1.5 percent of the minimum absolute stack temperature.

6.1.3.2 The temperature sensor shall either be positioned near the center of the stack, or be attached to the pitot tube as directed in Section 6.3 of Method 2.

6.1.4 Sample Train Connectors.

6.1.4.1 Use thick wall flexible plastic tubing (polyethylene, polypropylene, or polyvinyl chloride) ~ 6.4-mm (¼-in.) to 9.5-mm (⅜-in.) ID to connect the train components.

6.1.4.2 A combination of rigid plastic tubing and thin wall flexible tubing may be used as long as tubing walls do not collapse when leak-checking the train. Metal tubing cannot be used.

6.1.5 Impingers. Three, one-quart capacity, glass canning jars with vacuum seal lids, or three Greenburg-Smith (GS) design impingers connected in series, or equivalent, may be used.

6.1.5.1 One-quart glass canning jar. Three separate jar containers are required: (1) the first jar contains the absorbing solution; (2) the second is empty and is used to collect any reagent carried over from the first container; and (3) the third contains the desiccant drying agent.

6.1.5.2 Canning Jar Connectors. The jar containers are connected by leak-tight inlet and outlet tubes installed in the lids of each container for assembly with the train. The tubes may be made of ~ 6.4 mm (¼-in.) ID glass or rigid plastic tubing. For the inlet tube of the first impinger, heat the glass or plastic tubing and draw until the tubing separates. Fabricate the necked tip to form an orifice tip that is approximately 2.4 mm (3⁄32-in.) ID.

6.1.5.2.1 When assembling the first container, place the orifice tip end of the tube approximately 4.8 mm (3⁄16-in.) above the inside bottom of the jar.

6.1.5.2.2 For the second container, the inlet tube need not be drawn and sized, but the tip should be approximately 25 mm (1 in.) above the bottom of the jar.

6.1.5.2.3 The inlet tube of the third container should extend to approximately 12.7 mm (½-in.) above the bottom of the jar.

6.1.5.2.4 Extend the outlet tube for each container approximately 50 mm (2 in.) above the jar lid and downward through the lid, approximately 12.7 mm (½-in.) beneath the bottom of the lid.

6.1.5.3 Greenburg-Smith Impingers. Three separate impingers of the Greenburg-Smith (GS) design as described in Section 6.0 of Method 5 are required. The first GS impinger shall have a standard tip (orifice/plate), and the second and third GS impingers shall be modified by replacing the orifice/plate tube with a 13 mm (½-in.) ID glass tube, having an unrestricted opening located 13 mm (½-in.) from the bottom of the outer flask.

6.1.5.4 Greenburg-Smith Connectors. The GS impingers shall be connected by leak-free ground glass ''U'' tube connectors or by leak-free non-contaminating flexible tubing. The first impinger shall contain the absorbing solution, the second is empty and the third contains the desiccant drying agent.

6.1.6 Manometer. Inclined/vertical type, or equivalent device, as described in Section 6.2 of Method 2 (40 CFR Part 60, Appendix A).

6.1.7 Critical Orifice. The critical orifice is a small restriction in the sample line that is located upstream of the vacuum pump. The orifice produces a constant sampling flow rate that is approximately 0.021 cubic meters per minute (m^3/min) or 0.75 cubic feet per minute (cfm).

6.1.7.1 The critical orifice can be constructed by sealing a 2.4-mm (3⁄32-in.) ID brass tube approximately 14.3 mm (9⁄16-in.) in length inside a second brass tube that is approximately 8 mm (5⁄16-in.) ID and 14.3-mm (9⁄16-in.) in length .

6.1.7.2 Materials other than brass can be used to construct the critical orifice as long as the flow through the sampling train can be maintained at approximately 0.021 cubic meter per minute (0.75) cfm.

6.1.8 Connecting Hardware. Standard pipe and fittings, 9.5-mm (⅜-in.), 6.4-mm (¼-in.) or 3.2-mm (⅛-in.) ID, may be used to assemble the vacuum pump, dry gas meter and other sampling train components.

6.1.9 Vacuum Gauge. Capable of measuring approximately 760 mm H_g (30 in. H_g) vacuum in 25.4 mm H_G (1 in. H_g) increments. Locate vacuum gauge between the critical orifice and the vacuum pump.

6.1.10 Pump Oiler. A glass oil reservoir with a wick mounted at the vacuum pump inlet that lubricates the pump vanes. The oiler should be an in-line type and not vented to the atmosphere. See EMTIC Guideline Document No. GD-041.WPD for additional information.

6.1.11 Vacuum Pump. Gast Model 0522–V103–G18DX, or equivalent, capable of delivering at least 1.5 cfm at 15 in. H_g vacuum.

6.1.12 Oil Trap/Muffler. An empty glass oil reservoir without wick mounted at the pump outlet to control the pump noise and prevent oil from reaching the dry gas meter.

6.1.13 By-pass Fine Adjust Valve (Optional). Needle valve assembly 6.4-mm (¼-in.), Whitey 1 RF 4–A, or equivalent, that allows for adjustment of the train vacuum.

6.1.13.1 A fine-adjustment valve is positioned in the optional pump by-pass system that allows the gas flow to recirculate through the pump. This by-pass system allows the tester to control/reduce the maximum leak-check vacuum pressure produced by the pump.

6.1.13.1.1 The tester must conduct the post test leak check at a vacuum equal to or greater than the maximum vacuum encountered during the sampling run.

6.1.13.1.2 The pump by-pass assembly is not required, but is recommended if the tester intends to leak-check the 306A train at the vacuum experienced during a run.

6.1.14 Dry Gas Meter. An Equimeter Model 110 test meter or, equivalent with temperature sensor(s) installed (inlet/outlet) to monitor the meter temperature. If only one temperature sensor is installed, locate the sensor at the outlet side of the meter. The dry gas meter must be capable of measuring the gaseous volume to within ±2% of the true volume.

Note: The Method 306 sampling train is also commercially available and may be used to perform the Method 306A tests. The sampling train may be assembled as specified in Method 306A with the sampling rate being operated at the delta $H_@$ specified for the calibrated orifice located in the meter box. The Method 306 train is then operated as described in Method 306A.

6.2 Barometer. Mercury aneroid barometer, or other barometer equivalent, capable of measuring atmospheric pressure to within ±2.5 mm H_g (0.1 in. H_g).

6.2.1 A preliminary check of the barometer shall be made against a mercury-in-glass reference barometer or its equivalent.

6.2.2 Tester may elect to obtain the absolute barometric pressure from a nearby National Weather Service station.

6.2.2.1 The station value (which is the absolute barometric pressure) must be adjusted for elevation differences between the weather station and the sampling location. Either subtract 2.5

mm H_g (0.1 in. H_g) from the station value per 30 m (100 ft) of elevation increase or add the same for an elevation decrease.

6.2.2.2 If the field barometer cannot be adjusted to agree within 0.1 in. H_g of the reference barometric, repair or discard the unit. The barometer pressure measurement shall be recorded on the sampling data sheet.

6.3 Sample Recovery. Same as Method 5, Section 6.2 (40 CFR Part 60, Appendix A), with the following exceptions:

6.3.1 Probe-Liner and Probe-Nozzle Brushes. Brushes are not necessary for sample recovery. If a probe brush is used, it must be non-metallic.

6.3.2 Wash Bottles. Polyethylene wash bottle, for sample recovery absorbing solution.

6.3.3 Sample Recovery Solution. Use 0.1 N NaOH or 0.1 N $NaHCO_3$, whichever is used as the impinger absorbing solution, to replace the acetone.

6.3.4 Sample Storage Containers.

6.3.4.1 Glass Canning Jar. The first canning jar container of the sampling train may serve as the sample shipping container. A new lid and sealing plastic wrap shall be substituted for the container lid assembly.

6.3.4.2 Polyethylene or Glass Containers. Transfer the Greenburg-Smith impinger contents to precleaned polyethylene or glass containers. The samples shall be stored and shipped in 250-mL, 500-mL or 1000-mL polyethylene or glass containers with leak-free, non metal screw caps.

6.3.5 pH Indicator Strip, for Cr^{+6} Samples. pH indicator strips, or equivalent, capable of determining the pH of solutions between the range of 7 and 12, at 0.5 pH increments.

6.3.6 Plastic Storage Containers. Air tight containers to store silica gel.

6.4 Analysis. Same as Method 306, Section 6.3.

7.0 Reagents and Standards.

Note: Unless otherwise indicated, all reagents shall conform to the specifications established by the Committee on Analytical Reagents of the American Chemical Society (ACS reagent grade). Where such specifications are not available, use the best available grade. It is recommended, but not required, that reagents be checked by the appropriate analysis prior to field use to assure that contamination is below the analytical detection limit for the ICP or GFAAS total chromium analysis; and that contamination is below the analytical detection limit for Cr^{+6} using IC/PCR for direct injection or, if selected, preconcentration.

7.1 Sampling.

7.1.1 Water. Reagent water that conforms to ASTM Specification D1193 Type II (incorporated by reference see § 63.14). All references to water in the method refer to reagent water unless otherwise specified. It is recommended that water blanks be checked prior to preparing the sampling reagents to ensure that the Cr content is less than three (3) times the anticipated detection limit of the analytical method.

7.1.2 Sodium Hydroxide (NaOH) Absorbing Solution, 0.1 N. Dissolve 4.0 g of sodium hydroxide in 1 liter of water to obtain a pH of approximately 8.5.

7.1.3 Sodium Bicarbonate ($NaHCO_3$) Absorbing Solution, 0.1 N. Dissolve approximately 8.5 g of sodium bicarbonate in 1 liter of water to obtain a pH of approximately 8.3.

7.1.4 Chromium Contamination.

7.1.4.1 The absorbing solution shall not exceed the QC criteria noted in Method 306, Section 7.1.1 (≤3 times the instrument detection limit).

7.1.4.2 When the Cr^{+6} content in the field samples exceeds the blank concentration by at least a factor of ten (10), Cr^{+6} blank levels ≤10 times the detection limit will be allowed.

Note: At sources with high concentrations of acids and/or SO_2, the concentration of NaOH or $NaHCO_3$ should be ≥0.5 N to insure that the pH of the solution remains at or above 8.5 for NaOH and 8.0 for $NaHCO_3$ during and after sampling.

7.1.3 Desiccant. Silica Gel, 6–16 mesh, indicating type. Alternatively, other types of desiccants may be used, subject to the approval of the Administrator.

7.2 Sample Recovery. Same as Method 306, Section 7.2.

7.3 Sample Preparation and Analysis. Same as Method 306, Section 7.3.

7.4 Glassware Cleaning Reagents. Same as Method 306, Section 7.4.

7.5 Quality Assurance Audit Samples.

7.5.1 It is recommended, but not required, that a performance audit sample be analyzed in conjunction with the field samples. The audit sample should be in a suitable sample matrix at a concentration similar to the actual field samples.

7.5.2 When making compliance determinations, and upon availability, audit samples may be obtained from the appropriate EPA regional Office or from the responsible enforcement authority and analyzed in conjunction with the field samples.

Note: The responsible enforcement authority should be notified at least 30 days prior to the test date to allow sufficient time for the audit sample to be delivered.

8.0 Sample Collection, Recovery, Preservation, Holding Times, Storage, and Transport

Note: Prior to sample collection, consideration should be given as to the type of analysis (Cr^{+6} or total Cr) that will be performed. Deciding which analysis will be performed will enable the tester to determine which appropriate sample recovery and storage procedures will be required to process the sample.

8.1 Sample Collection.

8.1.1 Pretest Preparation.

8.1.1.1 Selection of Measurement Site. Locate the sampling ports as specified in Section 11.0 of Method 1 (40 CFR Part 60, Appendix A).

8.1.1.2 Location of Traverse Points.

8.1.1.2.1 Locate the traverse points as specified in Section 11.0 of Method 1 (40 CFR Part 60, Appendix A). Use a total of 24 sampling points for round ducts and 24 or 25 points for rectangular ducts. Mark the pitot and sampling probe to identify the sample traversing points.

8.1.1.2.2 For round ducts less than 12 inches in diameter, use a total of 16 points.

8.1.1.3 Velocity Pressure Traverse. Perform an initial velocity traverse before obtaining samples. The Figure 306A–2 data sheet may be used to record velocity traverse data.

8.1.1.3.1 To demonstrate that the flow rate is constant over several days of testing, perform complete traverses at the beginning and end of each day's test effort, and calculate the deviation of the flow rate for each daily period. The beginning and end flow rates are considered constant if the deviation does not exceed 10 percent. If the flow rate exceeds the 10 percent criteria, either correct the inconsistent flow rate problem, or obtain the Administrator's approval for the test results.

8.1.1.3.2 Perform traverses as specified in Section 8.0 of Method 2, but record only the Δp (velocity pressure) values for each sampling point. If a mass emission rate is desired, stack velocity pressures shall be recorded before and after each test, and an average stack velocity pressure determined for the testing period.

8.1.1.4 Verification of Absence of Cyclonic Flow. Check for cyclonic flow during the initial traverse to verify that it does not exist. Perform the cyclonic flow check as specified in Section 11.4 of Method 1 (40 CFR Part 60, Appendix A).

8.1.1.4.1 If cyclonic flow is present, verify that the absolute average angle of the tangential flow does not exceed 20 degrees. If the average value exceeds 20 degrees at the sampling location, the flow condition in the stack is unacceptable for testing.

8.1.1.4.2 Alternative procedures, subject to approval of the Administrator,

e.g., installing straightening vanes to eliminate the cyclonic flow, must be implemented prior to conducting the testing.

8.1.1.5 Stack Gas Moisture Measurements. *Not required.* Measuring the moisture content is optional when a mass emission rate is to be calculated.

8.1.1.5.1 The tester may elect to either measure the actual stack gas moisture during the sampling run or utilize a nominal moisture value of 2 percent.

8.1.1.5.2 For additional information on determining sampling train moisture, please refer to Method 4 (40 CFR Part 60, Appendix A).

8.1.1.6 Stack Temperature Measurements. If a mass emission rate is to be calculated, a temperature sensor must be placed either near the center of the stack, or attached to the pitot tube as described in Section 8.3 of Method 2. Stack temperature measurements, shall be recorded before and after each test, and an average stack temperature determined for the testing period.

8.1.1.7 Point Sampling Times. Since the sampling rate of the train (0.75 cfm) is maintained constant by the critical orifice, it is necessary to calculate specific sampling times for each traverse point in order to obtain a proportional sample.

8.1.1.7.1 If the sampling period (3 runs) is to be completed in a single day, the point sampling times shall be calculated only once.

8.1.1.7.2 If the sampling period is to occur over several days, the sampling times must be calculated daily using the initial velocity pressure data recorded for that day. Determine the average of the Δp values obtained during the velocity traverse (Figure 306A–2).

8.1.1.7.3 If the stack diameter is less than 12 inches, use 7.5 minutes in place of 5 minutes in the equation and 16 sampling points instead of 24 or 25 points. Calculate the sampling times for each traverse point using the following equation:

$$\text{Minutes at point n} = \frac{\sqrt{\Delta p \text{ at Point n}}}{\left(\sqrt{\Delta p}\right)_{avg}} \times 5 \text{ min.} \qquad \text{Eq. 306A-1}$$

Where:
n = Sampling point number.
Δp = Average pressure differential across pitot tube, mm H_2O (in. H_2O).
ΔP_{avg} = Average of Δp values, mm H_2O (in. H_2O).

Note: Convert the decimal fractions for minutes to seconds.

8.1.1.8 Pretest Preparation. It is recommended, but not required, that all items which will be in contact with the sample be cleaned prior to performing the testing to avoid possible sample contamination (positive chromium bias). These items include, but are not limited to: Sampling probe, connecting tubing, impingers, and jar containers.

8.1.1.8.1 Sample train components should be: (1) Rinsed with hot tap water; (2) washed with hot soapy water; (3) rinsed with tap water; (4) rinsed with reagent water; (5) soaked in a 10 percent (v/v) nitric acid solution for at least four hours; and (6) rinsed throughly with reagent water before use.

8.1.1.8.2 At a minimum, the tester should, rinse the probe, connecting tubing, and first and second impingers twice with either 0.1 N sodium hydroxide (NaOH) or 0.1 N sodium bicarbonate ($NaHCO_3$) and discard the rinse solution.

8.1.1.8.3 If separate sample shipping containers are to be used, these also should be precleaned using the specified cleaning procedures.

8.1.1.9 Preparation of Sampling Train. Assemble the sampling train as shown in Figure 306A–1. Secure the nozzle-liner assembly to the outer sheath to prevent movement when sampling.

8.1.1.9.1 Place 250 mL of 0.1 N NaOH or 0.1 N $NaHCO_3$ absorbing solution into the first jar container or impinger. The second jar/impinger is to remain empty. Place 6 to 16 mesh indicating silica gel, or equivalent desiccant into the third jar/impinger until the container is half full (~ 300 to 400 g).

8.1.1.9.2 Place a small cotton ball in the outlet exit tube of the third jar to collect small silica gel particles that may dislodge and impair the pump and/or gas meter.

8.1.1.10 Pretest Leak-Check. A pretest leak-check is recommended, but not required. If the tester opts to conduct the pretest leak-check, the following procedures shall be performed: (1) Place the jar/impinger containers into an ice bath and wait 10 minutes for the ice to cool the containers before performing the leak check and/or start sampling; (2) to perform the leak check, seal the nozzle using a piece of clear plastic wrap placed over the end of a finger and switch on the pump; and (3) the train system leak rate should not exceed 0.02 cfm at a vacuum of 380 mm Hg (15 in. Hg) or greater. If the leak rate does exceed the 0.02 cfm requirement, identify and repair the leak area and perform the leak check again.

Note: Use caution when releasing the vacuum following the leak check. Always allow air to slowly flow through the nozzle end of the train system while the pump is still operating. Switching off the pump with vacuum on the system may result in the silica gel being pulled into the second jar container.

8.1.1.11 Leak-Checks During Sample Run. If, during the sampling run, a component (e.g., jar container) exchange becomes necessary, a leak-check shall be conducted *immediately before* the component exchange is made. The leak-check shall be performed according to the procedure outlined in Section 8.1.1.10 of this method. If the leakage rate is found to be ≤ 0.02 cfm at the maximum operating vacuum, the results are acceptable. If, however, a higher leak rate is obtained, either record the leakage rate and correct the sample volume as shown in Section 12.3 of Method 5 or void the sample and initiate a replacement run. Following the component change, leak-checks are optional, but are recommended as are the pretest leak-checks.

8.1.1.12 Post Test Leak Check. Remove the probe assembly and flexible tubing from the first jar/impinger container. Seal the inlet tube of the first container using clear plastic wrap and switch on the pump. The vacuum in the line between the pump and the critical orifice must be ≥15 in. Hg. Record the vacuum gauge measurement along with the leak rate observed on the train system.

8.1.1.12.1 If the leak rate does not exceed 0.02 cfm, the results are acceptable and no sample volume correction is necessary.

8.1.1.12.2 If, however, a higher leak rate is obtained (>0.02 cfm), the tester shall either record the leakage rate and correct the sample volume as shown in Section 12.3 of Method 5, or void the sampling run and initiate a replacement run. After completing the leak-check, slowly release the vacuum at the first

container while the pump is still operating. Afterwards, switch-off the pump.

8.1.2 Sample Train Operation.

8.1.2.1 Data Recording. Record all pertinent process and sampling data on the data sheet (see Figure 306A–3). Ensure that the process operation is suitable for sample collection.

8.1.2.2 Starting the Test. Place the probe/nozzle into the duct at the first sampling point and switch on the pump. Start the sampling using the time interval calculated for the first point. When the first point sampling time has been completed, move to the second point and continue to sample for the time interval calculated for that point; sample each point on the traverse in this manner. Maintain ice around the sample containers during the run.

8.1.2.3 Critical Flow. The sample line between the critical orifice and the pump must operate at a vacuum of ≥ 380 mm Hg (≥15 in. Hg) in order for critical flow to be maintained. This vacuum must be monitored and documented using the vacuum gauge located between the critical orifice and the pump.

Note: Theoretically, critical flow for air occurs when the ratio of the orifice outlet absolute pressure to the orifice inlet absolute pressure is less than a factor of 0.53. This means that the system vacuum should be at least ≥ 356 mm Hg (≥ 14 in. Hg) at sea level and ~ 305 mm Hg (~ 12 in. Hg) at higher elevations.

8.1.2.4 Completion of Test.

8.1.2.4.1 Circular Stacks. Complete the first port traverse and switch off the pump. Testers may opt to perform a leak-check between the port changes to verify the leak rate however, this is not mandatory. Move the sampling train to the next sampling port and repeat the sequence. Be sure to record the final dry gas meter reading after completing the test run. After performing the post test leak check, disconnect the jar/impinger containers from the pump and meter assembly and transport the probe, connecting tubing, and containers to the sample recovery area.

8.1.2.4.2 Rectangle Stacks. Complete each port traverse as per the instructions provided in 8.1.2.4.1.

Note: If an approximate mass emission rate is to be calculated, measure and record the stack velocity pressure and temperature before and after the test run.

8.2 Sample Recovery. After the train has been transferred to the sample recovery area, disconnect the tubing that connects the jar/impingers. The tester shall select either the total Cr or Cr^{+6} sample recovery option. Samples to be analyzed for both total Cr and Cr^{+6} shall be recovered using the Cr^{+6} sample option (Section 8.2.2).

Note: Collect a reagent blank sample for each of the total Cr or the Cr^{+6} analytical options. If both analyses (Cr and Cr^{+6}) are to be conducted on the samples, collect separate reagent blanks for each analysis.

8.2.1 Total Cr Sample Option.

8.2.1.1 Shipping Container No. 1. The first jar container may either be used to store and transport the sample, or if GS impingers are used, samples may be stored and shipped in precleaned 250-mL, 500-mL or 1000-mL polyethylene or glass bottles with leak-free, non-metal screw caps.

8.2.1.1.1 Unscrew the lid from the first jar/impinger container.

8.2.1.1.2 Lift the inner tube assembly almost out of the container, and using the wash bottle containing fresh absorbing solution, rinse the outside of the tube that was immersed in the container solution; rinse the inside of the tube as well, by rinsing twice from the top of the tube down through the inner tube into the container.

8.2.1.2 Recover the contents of the second jar/impinger container by removing the lid and pouring any contents into the first shipping container.

8.2.1.2.1 Rinse twice, using fresh absorbing solution, the inner walls of the second container including the inside and outside of the inner tube.

8.2.1.2.2 Rinse the connecting tubing between the first and second sample containers with absorbing solution and place the rinses into the first container.

8.2.1.3 Position the nozzle, probe and connecting plastic tubing in a vertical position so that the tubing forms a ''U''.

8.2.1.3.1 Using the wash bottle, partially fill the tubing with fresh absorbing solution. Raise and lower the end of the plastic tubing several times to allow the solution to contact the internal surfaces. Do not allow the solution to overflow or part of the sample will be lost. Place the nozzle end of the probe over the mouth of the first container and elevate the plastic tubing so that the solution flows into the sample container.

8.2.1.3.2 Repeat the probe/tubing sample recovery procedure but allow the solution to flow out the opposite end of the plastic tubing into the sample container. Repeat the entire sample recovery procedure once again.

8.2.1.4 Use approximately 200 to 300 mL of the 0.1 N NaOH or 0.1 N $NaHCO_3$ absorbing solution during the rinsing of the probe nozzle, probe liner, sample containers, and connecting tubing.

8.2.1.5 Place a piece of clear plastic wrap over the mouth of the sample jar to seal the shipping container. Use a standard lid and band assembly to seal and secure the sample in the jar.

8.2.1.5.1 Label the jar clearly to identify its contents, sample number and date.

8.2.1.5.2 Mark the height of the liquid level on the container to identify any losses during shipping and handling.

8.2.1.5.3 Prepare a chain-of-custody sheet to accompany the sample to the laboratory.

8.2.2 Cr^{+6} Sample Option.

8.2.2.1 Shipping Container No. 1. The first jar container may either be used to store and transport the sample, or if GS impingers are used, samples may be stored and shipped in precleaned 250-mL, 500-mL or 1000-mL polyethylene or glass bottles with leak-free non-metal screw caps.

8.2.2.1.1 Unscrew and remove the lid from the first jar container.

8.2.2.1.2 Measure and record the pH of the solution in the first container by using a pH indicator strip. The pH of the solution must be ≥8.5 for NaOH and ≥8.0 for $NaHCO_3$. If not, discard the collected sample, increase the concentration of the NaOH or NaHCO3 absorbing solution to 0.5 M and collect another air emission sample.

8.2.2.2 After measuring the pH of the first container, follow sample recovery procedures described in Sections 8.2.1.1 through 8.2.1.5.

Note: Since particulate matter is not usually present at chromium electroplating and/or chromium anodizing facilities, it is not necessary to filter the Cr^{+6} samples unless there is observed sediment in the collected solutions. If it is necessary to filter the Cr^{+6} solutions, please refer to the EPA Method 0061, Determination of Hexavalent Chromium Emissions from Stationary Sources, Section 7.4, Sample Preparation in SW–846 (see Reference 5) for procedure.

8.2.3 Silica Gel Container. Observe the color of the indicating silica gel to determine if it has been completely spent and make a notation of its condition/color on the field data sheet. Do not use water or other liquids to remove and transfer the silica gel.

8.2.4 Total Cr and/or Cr^{+6} Reagent Blank.

8.2.4.1 Shipping Container No. 2. Place approximately 500 mL of the 0.1 N NaOH or 0.1 N $NaHCO_3$ absorbing solution in a precleaned, labeled sample container and include with the field samples for analysis.

8.3 Sample Preservation, Storage, and Transport.

8.3.1 Total Cr Option. Samples that are to be analyzed for total Cr need not be refrigerated.

8.3.2 Cr^{+6} Option. Samples that are to be analyzed for Cr^{+6} must be shipped and stored at 4°C (~40°F).

Note: Allow Cr^{+6} samples to return to ambient temperature prior to analysis.

8.4 Sample Holding Times.

8.4.1 Total Cr Option. Samples that are to be analyzed for total chromium must be analyzed within 60 days of collection.

8.4.2 Cr^{+6} Option. Samples that are to be analyzed for Cr^{+6} must be analyzed within 14 days of collection.

9.0 Quality Control

9.1 Same as Method 306, Section 9.0.

10.0 Calibration and Standardization

Note: Tester shall maintain a performance log of all calibration results.

10.1 Pitot Tube. The Type S pitot tube assembly shall be calibrated according to the procedures outlined in Section 10.1 of Method 2.

10.2 Temperature Sensor. Use the procedure in Section 10.3 of Method 2 to calibrate the in-stack temperature sensor.

10.3 Metering System.

10.3.1 Sample Train Dry Gas Meter Calibration. Calibrations may be performed as described in Section 16.2 of Method 5 by either the manufacturer, a firm who provides calibration services, or the tester.

10.3.2 Dry Gas Meter Calibration Coefficient (Y_m). The meter calibration coefficient (Y_m) must be determined prior to the initial use of the meter, and following each field test program. If the dry gas meter is new, the manufacturer will have specified the Y_m value for the meter. This Y_m value can be used as the pretest value for the first test. For subsequent tests, the tester must use the Y_m value established during the pretest calibration.

10.3.3 Calibration Orifice. The manufacturer may have included a calibration orifice and a summary spreadsheet with the meter that may be used for calibration purposes. The spreadsheet will provide data necessary to determine the calibration for the orifice and meter (standard cubic feet volume, sample time, *etc.*). These data were produced when the initial Y_m value was determined for the meter.

10.3.4 Y_m Meter Value Verification or Meter Calibration.

10.3.4.1 The Y_m meter value may be determined by replacing the sampling train critical orifice with the calibration orifice. Replace the critical orifice assembly by installing the calibration orifice in the same location. The inlet side of the calibration orifice is to be left open to the atmosphere and is *not* to be reconnected to the sample train during the calibration procedure.

10.3.4.2 If the vacuum pump is cold, switch on the pump and allow it to operate (become warm) for several minutes prior to starting the calibration. After stopping the pump, record the initial dry gas meter volume and meter temperature.

10.3.4.3 Perform the calibration for the number of minutes specified by the manufacturer's data sheet (usually 5 minutes). Stop the pump and record the final dry gas meter volume and temperature. Subtract the start volume from the stop volume to obtain the V_m and average the meter temperatures (t_m).

10.3.5 Y_m Value Calculation. Y_m is the calculated value for the dry gas meter. Calculate Y_m using the following equation:

$$Y_m = \frac{V_{m(std),mfg}}{V_m\left(\frac{T_{std}}{P_{std}}\right)\left(\frac{P_{bar}}{T_m}\right)}$$

$$Y_m = \frac{V_{m(std),mfg}\,T_m}{17.64\,V_m\,P_{bar}} \qquad \text{Eq. 306A-2}$$

Where:

P_{bar} = Barometric pressure at meter, mm Hg, (in. Hg).
P_{std} = Standard absolute pressure,
Metric = 760 mm Hg.
English = 29.92 in. Hg.
t_m = Average dry gas meter temperature, °C, (°F).
T_m = Absolute average dry gas meter temperature,
Metric °K = 273 + tm (°C).
English °R = 460 + t_m(°F).
T_{std} = Standard absolute temperature,
Metric = 293 °K.
English = 528 °R.
V_m = Volume of gas sample as measured (actual) by dry gas meter, dcm,(dcf).
$V_{m(std),mfg}$ = Volume of gas sample measured by manufacture's calibrated orifice and dry gas meter, corrected to standard conditions (pressure/temperature) dscm (dscf).
Y_m = Dry gas meter calibration factor, (dimensionless).

10.3.6 Y_m Comparison. Compare the Y_m value provided by the manufacturer (Section 10.3.3) or the pretest Y_m value to the post test Y_m value using the following equation:

$$\frac{Y_m(\text{manufacturer's or pretest value})}{Y_m(\text{post-test value})} \qquad \text{Eq. 306A-3}$$

10.3.6.1 If this ratio is between 0.95 and 1.05, the designated Y_m value for the meter is acceptable for use in later calculations.

10.3.6.1.1 If the value is outside the specified range, the test series shall

either be: 1) voided and the samples discarded; or 2) calculations for the test series shall be conducted using whichever meter coefficient value (i.e., manufacturers's/pretest Y_m value or post test Y_m value) produces the lowest sample volume.

10.3.6.1.2 If the post test dry gas meter Y_m value differs by more than 5% as compared to the pretest value, either perform the calibration again to determine acceptability or return the meter to the manufacturer for recalibration.

10.3.6.1.3 The calibration may also be conducted as specified in Section 10.3 or Section 16.0 of Method 5 (40 CFR Part 60, Appendix A), except that it is only necessary to check the calibration at one flow rate of ~ 0.75 cfm.

10.3.6.1.4 The calibration of the dry gas meter must be verified after each field test program using the same procedures.

Note: The tester may elect to use the Y_m post test value for the next pretest Y_m value; e.g., Test 1 post test Y_m value and Test 2 pretest Y_m value would be the same.

10.4 Barometer. Calibrate against a mercury barometer that has been corrected for temperature and elevation.

10.5 ICP Spectrometer Calibration. Same as Method 306, Section 10.2.

10.6 GFAA Spectrometer Calibration. Same as Method 306, Section 10.3.

10.7 IC/PCR Calibration. Same as Method 306, Section 10.4.

11.0 Analytical Procedures

Note: The method determines the chromium concentration in µg Cr/mL. It is important that the analyst measure the volume of the field sample prior to analyzing the sample. This will allow for conversion of µg Cr/mL to µg Cr/sample.

11.1 Analysis. Refer to Method 306 for sample preparation and analysis procedures.

12.0 Data Analysis and Calculations

12.1 Calculations. Perform the calculations, retaining one extra decimal point beyond that of the acquired data. When reporting final results, round number of figures consistent with the original data.

12.2 Nomenclature.

A = Cross-sectional area of stack, m_2 (ft_2).

B_{ws} = Water vapor in gas stream, proportion by volume, dimensionless (assume 2 percent moisture = 0.02).

C_p = Pitot tube coefficient; ''S'' type pitot coefficient usually 0.840, dimensionless.

C_S = Concentration of Cr in sample solution, µg Cr/mL.

C_{Cr} = Concentration of Cr in stack gas, dry basis, corrected to standard conditions µg/dscm (gr/dscf).

d = Diameter of stack, m (ft).

D = Digestion factor, dimensionless.

ER = Approximate mass emission rate, mg/hr (lb/hr).

F = Dilution factor, dimensionless.

L = Length of a square or rectangular duct, m (ft).

M_{Cr} = Total Cr in each sample, µg (gr).

M_s = Molecular weight of wet stack gas, wet basis, g/g-mole, (lb/lb-mole); in a nominal gas stream at 2% moisture the value is 28.62.

P_{bar} = Barometric pressure at sampling site, mm Hg (in. Hg).

P_s = Absolute stack gas pressure; in this case, usually the same value as the barometric pressure, mm Hg (in. Hg).

P_{std} = Standard absolute pressure:
Metric = 760 mm Hg.
English = 29.92 in. Hg.

Q_{std} = Average stack gas volumetric flow, dry, corrected to standard conditions, dscm/hr (dscf/hr).

t_m = Average dry gas meter temperature, °C (°F).

T_m = Absolute average dry gas meter temperature:
Metric °K = 273 + t_m (°C).
English °R = 460 + t_m(°F).

t_s = Average stack temperature,°C (°F).

T_s = Absolute average stack gas temperature: Metric °K = 273 + t_s (°C). English °R = 460 + t_s(°F).

T_{std} = Standard absolute temperature: Metric = 293 °K. English = 528 °R.

V_{ad} = Volume of sample aliquot after digestion (mL).

V_{af} = Volume of sample aliquot after dilution (mL).

V_{bd} = Volume of sample aliquot submitted to digestion (mL).

V_{bf} = Volume of sample aliquot before dilution (mL).

V_m = Volume of gas sample as measured (actual, dry) by dry gas meter, dcm (dcf).

V_{mL} = Volume of impinger contents plus rinses (mL).

$V_{m(std)}$ = Volume of gas sample measured by the dry gas meter, corrected to standard conditions (temperature/pressure), dscm (dscf).

v_s = Stack gas average velocity, calculated by Method 2, Equation 2–9, m/sec (ft/sec).

W = Width of a square or rectangular duct, m (ft).

Y_m = Dry gas meter calibration factor, (dimensionless).

Δp = Velocity head measured by the Type S pitot tube, cm H_2O (in. H_2O).

Δp_{avg} = Average of Δp values, mm H_2O (in. H_2O).

12.3 Dilution Factor. The dilution factor is the ratio of the volume of sample aliquot after dilution to the volume before dilution. The dilution factor is usually calculated by the laboratory. This ratio is derived by the following equation:

$$F = \frac{V_{af}}{V_{bf}} \qquad \text{Eq. 306A-4}$$

12.4 Digestion Factor. The digestion factor is the ratio of the volume of sample aliquot after digestion to the volume before digestion. The digestion factor is usually calculated by the laboratory. This ratio is derived by the following equation.

$$D = \frac{V_{ad}}{V_{bd}} \qquad \text{Eq. 306A-5}$$

12.5 Total Cr in Sample. Calculate M_{Cr}, the total µg Cr in each sample, using the following equation:

$$M_{Cr} = V_{mL} \times C_S \times F \times D \qquad \text{Eq. 306A-6}$$

12.6 Dry Gas Volume. Correct the sample volume measured by the dry gas meter to standard conditions (20°C, 760 mm Hg or 68'F, 29.92 in. Hg) using the following equation:

$$V_{m(std)} = V_m Y_m \left(\frac{T_{std}}{T_m}\right)\left(\frac{P_{bar}}{P_{std}}\right) = K_1 V_m Y_m \left(\frac{P_{bar}}{T_m}\right) \qquad \text{Eq. 306A-7}$$

Where:

K_1 = Metric units—0.3855 °K/mm Hg.
English units—17.64 °R/in. Hg.

12.7 Cr Emission Concentration (C_{Cr}). Calculate C_{Cr}, the Cr concentration in the stack gas, in µg/dscm (µg/dscf) on a dry basis, corrected to standard conditions, using the following equation:

$$C_{Cr} = \frac{M_{Cr}}{V_{m(std)}} \qquad \text{Eq. 306A-8}$$

NOTE: To convert µg/dscm (µg/dscf) to mg/dscm (mg/dscf), divide by 1000.

12.8 Stack Gas Velocity.

12.8.1 K_p = Velocity equation constant:

$$\text{Metric } K_p = 34.97 \frac{m}{sec}\left[\frac{(g/g\text{-mole})(mm\ Hg)}{(^\circ K)(mm\ H_2O)}\right]^{1/2}$$

$$\text{English } K_p = 85.49 \frac{ft}{sec}\left[\frac{(lb/lb\text{-mole})(in.\ Hg)}{(^\circ R)(in.\ H_2O)}\right]^{1/2}$$

12.8.2 Average Stack Gas Velocity.

$$v_s = K_p C_p \left(\sqrt{\Delta p}\right)_{avg} \sqrt{\frac{T_{s(avg)}}{P_s M_s}}$$

$$= 34.97\ C_p \left(\sqrt{\Delta p}\right)_{avg} \sqrt{\frac{T_{s(avg)}}{P_s M_s}} \qquad \text{Eq. 306A-9}$$

12.9 Cross sectional area of stack.

$$A = \frac{\Pi d^2}{4} \text{ or } A = LW \qquad \text{Eq. 306A-10}$$

12.10 Average Stack Gas Dry Volumetric Flow Rate.

Note: The emission rate may be based on a nominal stack moisture content of 2 percent (0.02). To calculate an emission rate, the tester may elect to use either the nominal stack gas moisture value or the actual stack gas moisture collected during the sampling run.

Volumetric Flow Rate Equation:

$$Q_{std} = 3600\left(1 - B_{ws}\right) v_s A \left(\frac{T_{std}}{T_{s(avg)}}\right)\left(\frac{P_s}{P_{std}}\right) \qquad \text{Eq. 306A-11}$$

Where: 3600 = Conversion factor, sec/hr.

$$Q_{std} = 62{,}234\ v_s A \left(\frac{P_s}{T_{s(avg)}}\right) \qquad \text{Eq. 306A-12}$$

Note: To convert Q_{std} from dscm/hr (dscf/hr) to dscm/min (dscf/min), divide Q_{std} by 60.

12.11 Mass emission rate, mg/hr (lb/hr):

$$ER = C_{cr} \times Q_{std} \times 10^{-3} \ (mg/hr) \qquad \text{Eq. 306A-13}$$

$$ER = C_{cr} \times Q_{std} \times 1.43 \times 10^{-4} \ (lb/hr) \qquad \text{Eq. 306A-14}$$

13.0 Method Performance

13.1 Range. The recommended working range for all of the three analytical techniques starts at five times the analytical detection limit (see also Method 306, Section 13.2.2). The upper limit of all three techniques can be extended indefinitely by appropriate dilution.

13.2 Sensitivity.

13.2.1 Analytical Sensitivity. The estimated instrumental detection limits listed are provided as a guide for an instrumental limit. The actual method detection limits are sample and instrument dependent and may vary as the sample matrix varies.

13.2.1.1 ICP Analytical Sensitivity. The minimum estimated detection limits for ICP, as reported in Method 6010A and the recently revised Method 6010B of SW–846 (Reference 1), are 7.0 µg Cr/L and 4.7 µg Cr/L, respectively.

13.2.1.2 GFAAS Analytical Sensitivity. The minimum estimated detection limit for GFAAS, as reported in Methods 7000A and 7191 of SW–846 (Reference 1), is 1.0 µg Cr/L.

13.2.1.3 IC/PCR Analytical Sensitivity. The minimum detection limit for IC/PCR with a preconcentrator, as reported in Methods 0061 and 7199 of SW–846 (Reference 1), is 0.05 µg Cr^{+6}/L.

13.2.2 In-stack Sensitivity. The in-stack sensitivity depends upon the analytical detection limit, the volume of stack gas sampled, and the total volume of the impinger absorbing solution plus the rinses. Using the analytical detection limits given in Sections 13.2.1.1, 13.2.1.2, and 13.2.1.3; a stack gas sample volume of 1.7 dscm; and a total liquid sample volume of 500 mL; the corresponding in-stack detection limits are 0.0014 mg Cr/dscm to 0.0021 mg Cr/dscm for ICP, 0.00029 mg Cr/dscm for GFAAS, and 0.000015 mg Cr^{+36}/dscm for IC/PCR with preconcentration.

Note: It is recommended that the concentration of Cr in the analytical solutions be at least five times the analytical detection limit to optimize sensitivity in the analyses. Using this guideline and the same assumptions for impinger sample volume and stack gas sample volume (500 mL and 1.7 dscm, respectively), the recommended minimum stack concentrations for optimum sensitivity are 0.0068 mg Cr/dscm to 0.0103 mg Cr/dscm for ICP, 0.0015 mg Cr/dscm for GFAAS, and 0.000074 mg Cr^{+6} dscm for IC/PCR with preconcentration. If required, the in-stack detection limits can be improved by either increasing the sampling time, the stack gas sample volume, reducing the volume of the digested sample for GFAAS, improving the analytical detection limits, or any combination of the three.

13.3 Precision.

13.3.1 The following precision data have been reported for the three analytical methods. In each case, when the sampling precision is combined with the reported analytical precision, the resulting overall precision may decrease.

13.3.2 Bias data is also reported for GFAAS.

13.4 ICP Precision.

13.4.1 As reported in Method 6010B of SW–846 (Reference 1), in an EPA round-robin Phase 1 study, seven laboratories applied the ICP technique to acid/distilled water matrices that had been spiked with various metal concentrates. For true values of 10, 50, and 150 µg Cr/L; the mean reported values were 10, 50, and 149 µg Cr/L; and the mean percent relative standard deviations were 18, 3.3, and 3.8 percent, respectively.

13.4.2 In another multilaboratory study cited in Method 6010B, a mean relative standard of 8.2 percent was reported for an aqueous sample concentration of approximately 3750 µg Cr/L.

13.5 GFAAS Precision. As reported in Method 7191 of SW–846 (Reference 1), in a single laboratory (EMSL), using Cincinnati, Ohio tap water spiked at concentrations of 19, 48, and 77 µg Cr/L, the standard deviations were ±0.1, ±0.2, and ±0.8, respectively. Recoveries at these levels were 97 percent, 101 percent, and 102 percent, respectively.

13.6 IC/PCR Precision. As reported in Methods 0061 and 7199 of SW–846 (Reference 1), the precision of IC/PCR with sample preconcentration is 5 to 10 percent; the overall precision for sewage sludge incinerators emitting 120 ng/dscm of Cr^{+6} and 3.5 µg/dscm of total Cr is 25 percent and 9 percent, respectively; and for hazardous waste incinerators emitting 300 ng/dscm of Cr^{+6} the precision is 20 percent.

14.0 Pollution Prevention

14.1 The only materials used in this method that could be considered pollutants are the chromium standards used for instrument calibration and acids used in the cleaning of the collection and measurement containers/labware, in the preparation of standards, and in the acid digestion of samples. Both reagents can be stored in the same waste container.

14.2 Cleaning solutions containing acids should be prepared in volumes consistent with use to minimize the disposal of excessive volumes of acid.

14.3 To the extent possible, the containers/vessels used to collect and prepare samples should be cleaned and reused to minimize the generation of solid waste.

15.0 Waste Management

15.1 It is the responsibility of the laboratory and the sampling team to comply with all federal, state, and local regulations governing waste management, particularly the discharge regulations, hazardous waste identification rules, and land disposal restrictions; and to protect the air, water, and land by minimizing and controlling all releases from field operations.

15.2 For further information on waste management, consult The Waste Management Manual for Laboratory Personnel and Less is Better-Laboratory Chemical Management for Waste Reduction, available from the American Chemical Society's Department of Government Relations and Science Policy, 1155 16th Street NW, Washington, DC 20036.

16.0 References

1. F.R. Clay, Memo, Impinger Collection Efficiency—Mason Jars vs. Greenburg-Smith Impingers, Dec. 1989.

2. Segall, R.R., W.G. DeWees, F.R. Clay, and J.W. Brown. Development of Screening Methods for Use in Chromium Emissions Measurement and Regulations Enforcement. In: Proceedings of the 1989 EPA/A&WMA International Symposium-Measurement of Toxic and Related Air Pollutants, A&WMA Publication VIP–13, EPA Report No. 600/9–89–060, p. 785.

3. Clay, F.R., Chromium Sampling Method. In: Proceedings of the 1990 EPA/A&WMA International Symposium-Measurement of Toxic and Related Air Pollutants, A&WMA Publication VIP–17, EPA Report No. 600/9–90–026, p. 576.

4. Clay, F.R., Proposed Sampling Method 306A for the Determination of Hexavalent Chromium Emissions from Electroplating and Anodizing Facilities. In: Proceedings of the 1992 EPA/A&WMA International Symposium-Measurement of Toxic and

Related Air Pollutants, A&WMA Publication VIP–25, EPA Report No. 600/R–92/131, p. 209.

5. Test Methods for Evaluating Solid Waste, Physical/Chemical Methods, SW–846, Third Edition as amended by Updates I, II, IIA, IIB, and III. Document No. 955–001–000001. Available from Superintendent of Documents, U.S. Government Printing Office, Washington, DC, November 1986.

BILLING CODE 6560–50–P

17.0 Tables, Diagrams, Flowcharts, and Validation Data

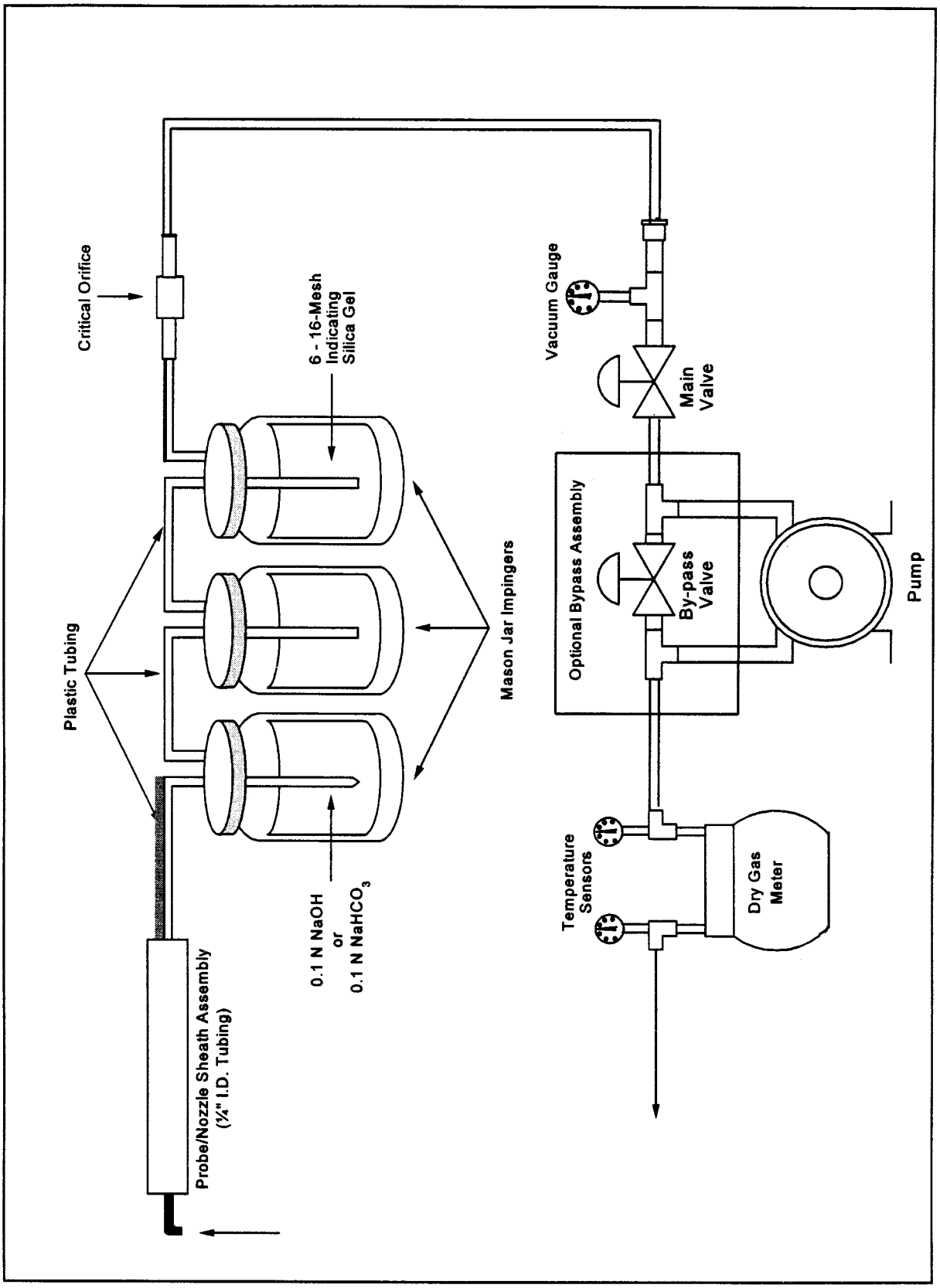

Figure 306A-1. Method 306A Sampling Train.

Plant _____

Date _____ Time _____

Location _____

Operator(s) _____

Begining stack temperature, °F _____

Ending stack temperature, °F _____

Average stack temperature, °F _____

Schematic of Points

Circle one:

Before Run 1 Before Run 2 Before Run 3 After Run No. ___

Traverse Point Number	Cyclonic Flow Angle (Degrees)	Δp	$\sqrt{\Delta p}$	$\frac{\sqrt{\Delta p}}{\sqrt{\Delta p_{Avg}}} \times 5$ min = Numerical Minutes	Decimal Part of Minute x 60 = Seconds	Whole Minutes + Seconds = Sample Time

	Total		Total			
	Avg		Avg			

Figure 306A-2. Velocity Traverse and Point Sample Time Calculation Sheet.

Plant _____

Sampling Site _____

Total Cr catch, M, μg _____

Avg dry gas meter temp, T_m, °F _____

Meter correction factor, Y_m _____

Meter volume, V_m, ft^3 _____

Barometric press, P_{bar}, in. Hg _____

Start clock time _____

Stop clock time _____

Date _____ Run Number _____

Operator _____

Stack radius, r, in. _____

Avg delta p, Δ p in., H_2O _____

Stack temp, T_s, °F _____

Leak rate before run, cfm _____

Leak rate after run, cfm _____

Stop meter volume, ft^3 _____

Start meter volume, ft^3 _____

POINT NO	SAMPLE (MIN/SEC)	GAS METER TEMP (F)		CRITICAL ORIFICE VACUUM IN. HG
	TOTAL			
		AVG		

POINT NO	SAMPLE (MIN/SEC)	GAS METER TEMP (F)		CRITICAL ORIFICE VACUUM IN. HG
	TOTAL			
		AVG		

REMARKS _____

Figure 306A-3. Chromium Constant Sampling Rate Field Data Sheet.

BILLING CODE 6560–50–C

Method 306B—Surface Tension Measurement for Tanks Used at Decorative Chromium Electroplating and Chromium Anodizing Facilities

Note: This method does not include all of the specifications (*e.g.,* equipment and supplies) and procedures (*e.g.,* sampling and analytical) essential to its performance. Some material is incorporated by reference from other methods in 40 CFR Part 60, Appendix A and in this part. Therefore, to obtain reliable results, persons using this method should have a thorough knowledge of at least Methods 5 and 306.

1.0 Scope and Application

1.1 Analyte. Not applicable.

1.2 Applicability. This method is applicable to all decorative chromium plating and chromium anodizing operations, and continuous chromium plating at iron and steel facilities where a wetting agent is used in the tank as the primary mechanism for reducing emissions from the surface of the plating solution.

2.0 Summary of Method

2.1 During an electroplating or anodizing operation, gas bubbles generated during the process rise to the surface of the liquid and burst. Upon bursting, tiny droplets of chromic acid become entrained in ambient air. The addition of a wetting agent to the tank bath reduces the surface tension of the liquid and diminishes the formation of these droplets.

2.2 This method determines the surface tension of the bath using a stalagmometer or a tensiometer to confirm that there is sufficient wetting agent present.

3.0 Definitions [Reserved]

4.0 Interferences [Reserved]

5.0 Safety

5.1 Disclaimer. This method may involve hazardous materials, operations, and equipment. This test method may not address all of the safety problems associated with its use. It is the responsibility of the user to establish appropriate safety and health practices and to determine the applicability of regulatory limitations prior to performing this test method.

6.0 Equipment and Supplies

6.1 Stalagmometer. Any commercially available stalagmometer or equivalent surface tension measuring device may be used to measure the surface tension of the plating or anodizing tank liquid.

6.2 Tensiometer. A tensiometer may be used to measure the surface tension of the tank liquid provided the procedures specified in ASTM Method D 1331–89, Standard Test Methods for Surface and Interfacial Tension of Solutions of Surface Active Agents (incorporated by reference—see § 63.14) are followed.

7.0 Reagents and Standards [Reserved]

8.0 Sample Collection, Sample Recovery, Sample Preservation, Sample Holding Times, Storage, and Transport [Reserved]

9.0 Quality Control [Reserved]

10.0 Calibration and Standardization [Reserved]

11.0 Analytical Procedure

11.1 Procedure. The surface tension of the tank bath may be measured by using a tensiometer, a stalagmometer or any other equivalent surface tension measuring device approved by the Administrator for measuring surface tension in dynes per centimeter. If the tensiometer is used, the procedures specified in ASTM Method D 1331–89 must be followed. If a stalagmometer or other device is used to measure surface tension, the instructions provided with the measuring device must be followed.

11.2 Frequency of Measurements.

11.2.1 Measurements of the bath surface tension are performed using a progressive system which decreases the frequency of surface tension measurements required when the proper surface tension is maintained.

11.2.1.1 Initially, following the compliance date, surface tension measurements must be conducted once every 4 hours of tank operation for the first 40 hours of tank operation.

11.2.1.2 Once there are no exceedances during a period of 40 hours of tank operation, measurements may be conducted once every 8 hours of tank operation.

11.2.1.3 Once there are no exceedances during a second period of 40 consecutive hours of tank operation, measurements may be conducted once every 40 hours of tank operation on an on-going basis, until an exceedance occurs. The maximum time interval for measurements is once every 40 hours of tank operation.

11.2.2 If a measurement of the surface tension of the solution is above the 45 dynes per centimeter limit, or above an alternate surface tension limit established during the performance test, the time interval shall revert back to the original monitoring schedule of once every 4 hours. A subsequent decrease in frequency would then be allowed according to Section 11.2.1.

12.0 Data Analysis and Calculations

12.1 Log Book of Surface Tension Measurements and Fume Suppressant Additions.

12.1.1 The surface tension of the plating or anodizing tank bath must be measured as specified in Section 11.2.

12.1.2 The measurements must be recorded in the log book. In addition to the record of surface tension measurements, the frequency of fume suppressant maintenance additions and the amount of fume suppressant added during each maintenance addition must be recorded in the log book.

12.1.3 The log book will be readily available for inspection by regulatory personnel.

12.2 Instructions for Apparatus Used in Measuring Surface Tension.

12.2.1 Included with the log book must be a copy of the instructions for the apparatus used for measuring the surface tension of the plating or anodizing bath.

12.2.2 If a tensiometer is used, a copy of ASTM Method D 1331–89 must be included with the log book.

13.0 Method Performance [Reserved]

14.0 Pollution Prevention [Reserved]

15.0 Waste Management [Reserved]

16.0 References [Reserved]

17.0 Tables, Diagrams, Flowcharts, and Validation Data [Reserved]

[FR Doc. 00–19099 Filed 10–16–00; 8:45 am]

BILLING CODE 6560–50–P

Reader Aids

Federal Register

Vol. 65, No. 201

Tuesday, October 17, 2000

CUSTOMER SERVICE AND INFORMATION

Federal Register/Code of Federal Regulations

General Information, indexes and other finding aids	**202–523–5227**
Laws	**523–5227**
Presidential Documents	
Executive orders and proclamations	**523–5227**
The United States Government Manual	**523–5227**
Other Services	
Electronic and on-line services (voice)	**523–4534**
Privacy Act Compilation	**523–3187**
Public Laws Update Service (numbers, dates, etc.)	**523–6641**
TTY for the deaf-and-hard-of-hearing	**523–5229**

ELECTRONIC RESEARCH

World Wide Web

Full text of the daily Federal Register, CFR and other publications:

http://www.access.gpo.gov/nara

Federal Register information and research tools, including Public Inspection List, indexes, and links to GPO Access:

http://www.nara.gov/fedreg

E-mail

PENS (Public Law Electronic Notification Service) is an E-mail service for notification of recently enacted Public Laws. To subscribe, send E-mail to

listserv@www.gsa.gov

with the text message:

subscribe PUBLAWS-L your name

Use listserv@www.gsa.gov only to subscribe or unsubscribe to PENS. We cannot respond to specific inquiries.

Reference questions. Send questions and comments about the Federal Register system to:

info@fedreg.nara.gov

The Federal Register staff cannot interpret specific documents or regulations.

FEDERAL REGISTER PAGES AND DATE, OCTOBER

58635–58900 2
58901–59104 3
59105–59338 4
59339–59694 5
59695–60092 6
60093–60338 10
60339–60568 11
60569–60830 12
60831–61076 13
61077–61254 16
61255–62274 17

CFR PARTS AFFECTED DURING OCTOBER

At the end of each month, the Office of the Federal Register publishes separately a List of CFR Sections Affected (LSA), which lists parts and sections affected by documents published since the revision date of each title.

3 CFR

Proclamations:
7346 59311
7347 59313
7348 59315
7349 59317
7350 59321
7351 59329
7352 60567
7353 60569
7354 60571
7355 60573
7356 60575
7357 60577
7358 60579
7359 60831
7360 60833
7361 60835
7362 61255
7363 61257

Executive Orders:
11625 (See 13170) 60827
13169 60581
13170 60827
13171 61251

Administrative Orders:
Presidential Determinations:
No. 2000–30 of September 19, 2000 59339
No. 2000–31 of September 28, 2000 59695
No. 2000–32 of September 29, 2000 59697
No. 2000–33 of September 29, 2000 59699

5 CFR

430 60837
591 58901
1201 58902
8301 58635

7 CFR

272 59105
274 59105
301 61077
956 61080

Proposed Rules
210 60502
226 60502
235 60502
245 60502
905 .....58672, 60121
944 .....58672, 60121
1210 61122
1412 59759

8 CFR

234 58902
299 61259

Proposed Rules:
3 60384
212 60384

9 CFR

391 60093
590 60093

10 CFR

1 59270
2 59270
72 60339
13 59270
434 60000
435 60000
830 60292

Proposed Rules
72 60384
140 61283
430 .....59550, 59590, 59761

12 CFR

226 58903
263 60583
509 61260
510 61260
563b 60095
575 60095

Proposed Rules:
563b 60123
575 60123

13 CFR

121 60342

Proposed Rules:
119 60256
126 58963

14 CFR

25 60343
39 .....58640, 58641, 58645, 58647, 59701, 59703, 59705, 59707, 59709, 59710, 60347, 60349, 60845, 60846, 60848, 60850, 61083, 61085, 61262
61 60334
63 60334
65 60334
71 .....59341, 59711, 59712, 60352, 61087
73 59341
91 60352
93 60352
97 .....59342, 59345
108 60334
121 .....60334, 60352
135 .....60334, 60352
187 59713
383 61089

Proposed Rules:
36 .....59634, 61125

39 .....58675, 58678, 58681, 58966, 59146, 59381, 59383, 60124, 60126, 60129, 60591, 60593, 60595, 60597, 60599, 60897, 61287, 61289
43.....58878
45.....58878
71 .....59762, 59763, 59764, 60385, 61125, 61126, 61127

15 CFR

101.....59714
734.....60852
738.....60852
740.....60852
742.....58911, 60852
743.....60852
744.....60852
748.....60852
774.....58911, 60852
902.....61264
922.....60096

16 CFR

1.....60857
311.....60857
Proposed Rules:
Ch. II.....58968
307.....60899
313.....59766

17 CFR

4.....58648
30.....60558, 60560
Proposed Rules:
240.....59766

18 CFR

284.....59111

19 CFR

10.....59650, 59668
163.....59650, 59668

20 CFR

Proposed Rules:
404.....58970, 60584
416.....58970, 60584

21 CFR

25.....60499
73.....59717, 60253
101.....58917
172.....60858
510.....60097, 60585
522.....61090
526.....61091
556.....61091
601.....59718
872.....60098

22 CFR

Proposed Rules:
51.....60132

23 CFR

1275.....59112

24 CFR

200.....61072
203.....60320
236.....61072
291.....60324
880.....61072
881.....61072
883.....61072
888.....58870
982.....58870
985.....58870
Proposed Rules:
888.....60084

26 CFR

1 .....58650, 60585, 61091, 61268
602.....61268
Proposed Rules:
1 .....58973, 59774, 60136, 61292
5f.....61292
31.....61292
301.....60822

27 CFR

4.....59719
Proposed Rules:
9.....61129

28 CFR

0.....60100
541.....59725

29 CFR

4022.....60859
4044.....60859

30 CFR

42.....59048
47.....59048
56.....59048, 61270
57.....59048, 61270
62.....61270
70.....61270
71.....61270
77.....59048
Proposed Rules:
920.....59150
946.....59152

31 CFR

Proposed Rules:
205.....60796

32 CFR

706 .....61092, 61093, 61094, 61095, 61096, 61097, 61098, 61099
752.....60861
1615.....60100
Proposed Rules:
323.....60900

33 CFR

66.....59124
100.....58652
117 .....59126, 60359, 60360, 60361
165.....58654, 58655
Proposed Rules:
117.....59780

36 CFR

Proposed Rules:
1190.....58974
1191.....58974
1258.....60862

38 CFR

21 .....59127, 60499, 60724, 61100
Proposed Rules:
3.....61132

39 CFR

20.....60361
111.....61102
Proposed Rules:
111.....58682
502.....58682

40 CFR

9.....59894
35.....58850
52 .....59128, 59727, 60101, 61104
60.....61744
61.....61744
63.....59894, 61744
81 .....59128, 60362, 61103
85.....59896
86.....59896
132.....59738
180.....59346, 61270
271.....59135, 61109
300.....58656, 61112
403.....59738
Proposed Rules:
52 .....58698, 59154, 59782, 60141, 60144, 61133, 61134
63.....58702
81.....59154, 60362
82.....59783
123.....59385
271.....59155, 61135
403.....59791
1601.....59155

41 CFR

101–40.....60060
102–117.....60060
Proposed Rules:
60–1.....60816
60–250.....60816
60–741.....60816
61–250.....59684

42 CFR

36.....58918
412.....59748
413 .....58919, 59748, 60104, 61112
422.....59749
424.....60366
440.....60105
441.....60105
489 .....58919, 59748, 61112
498.....58919, 61112
Proposed Rules:
447.....60151

43 CFR

Proposed Rules:
4.....60602

44 CFR

59.....60758
61.....60758
64.....61278, 61280
Proposed Rules:
65.....60159
206.....58720

47 CFR

1.....59350, 60868
2 .....59350, 60108, 60869
20.....58657, 60112
25.....59140, 59749
27.....60112
32.....58661
54.....58662
63.....60113
64.....58661
73 .....58920, 58921, 59144, 59145, 59751, 59752, 60378, 60379, 60585, 61113
87.....59350, 60108
90.....60379, 60869
95.....60869
101.....59350, 60382
Proposed Rules:
54.....58721
73 .....59162, 59163, 59388, 59389, 59796, 59797, 60163, 60387, 60602, 61299
76.....60387

48 CFR

Ch. 1 60542
2 60542
4 60542
5 60542
7 60542
15 60542
19 60542
52 60542
53 60542
1511 58921
1515 58921
1517 58921
1519 58921
1523 58921
1528 58921
1535 58921
1542 58921
1545 58921
1552 58921
1807 58931
1811 58931
1815 58931
1816 58931
1817 58931
1819 58931
1834 58931
1837 58932
1843 58931
1845 58931
1852 58931

Proposed Rules:

9904 59504

49 CFR

172 60382
173 60382
177 60382
375 58663
386 58663
391 59362

Proposed Rules:

1180 58974

50 CFR

17 ....58933, 60879
20 58664
223 60383
600 59752
622 61114
635 ....60118, 60889
648 ....59758, 60118, 60586, 60892
660 59752
679 ....59380, 60587, 61264
697 61116

Proposed Rules:

17 ....58981, 59798, 60391, 60603, 60605, 60607, 61218
216 59164
622 ....59170, 60163
648 60396
660 59813
679 58727
697 61135

REMINDERS

The items in this list were editorially compiled as an aid to Federal Register users. Inclusion or exclusion from this list has no legal significance.

RULES GOING INTO EFFECT OCTOBER 17, 2000

AGRICULTURE DEPARTMENT

Agricultural Marketing Service

Onions (sweet) grown in—
- Washington and Oregon; published 10-16-00

ENVIRONMENTAL PROTECTION AGENCY

Air pollution; standards of performance for new stationary sources:
- Testing and monitoring provisions; amendments; published 10-17-00

Pesticides; tolerances in food, animal feeds, and raw agricultural commodities:
- Azoxystrobin; published 10-17-00

INTERIOR DEPARTMENT

Land Management Bureau

Minerals management:
- Leasing of solid minerals other than coal and oil shale; published 8-18-00

JUSTICE DEPARTMENT

Immigration and Naturalization Service

Immigration:
- Public use forms; duplication and electronic generation; published 10-17-00

LABOR DEPARTMENT

Mine Safety and Health Administration

Coal mine and metal and nonmetal mine safety and health:
- Occupational noise exposure—
  - Health standards; correction; published 10-17-00

TRANSPORTATION DEPARTMENT

Federal Aviation Administration

Airworthiness directives:
- Agusta S.p.A.; published 10-2-00
- Boeing; published 10-2-00
- General Electric Co.; published 10-2-00
- General Electric Co.; correction; published 10-16-00
- Turbomeca; published 10-2-00

TREASURY DEPARTMENT

Internal Revenue Service

Income taxes:
- Earned income credit eligibility determination; paid preparer due diligence requirements; published 10-17-00
- Qualified retirement plans—
  - Cash-out limits increase; published 7-19-00

TREASURY DEPARTMENT

Thrift Supervision Office

Practice and procedure in adjudicatory proceedings:
- Civil monetary penalties; inflation adjustment; published 10-17-00

COMMENTS DUE NEXT WEEK

AGRICULTURE DEPARTMENT

Animal and Plant Health Inspection Service

Plant-related quarantine, foreign:
- Fuji variety apples from Korea; comments due by 10-23-00; published 8-22-00

AGRICULTURE DEPARTMENT

Federal Crop Insurance Corporation

Crop insurance regulations:
- Forage seeding crop; comments due by 10-25-00; published 9-25-00

AGRICULTURE DEPARTMENT

Forest Service

Alaska National Interest Lands Conservation Act; Title VIII implementation (subsistence priority):
- Wildlife; 2001-2002 subsistence taking; comments due by 10-27-00; published 8-24-00

State and private forestry assistance:
- Urban and Community Forestry Assistance Program; comments due by 10-25-00; published 9-25-00

COMMERCE DEPARTMENT

National Oceanic and Atmospheric Administration

Fishery conservation and management:
- West Coast States and Western Pacific fisheries—
  - Pacific Coast groundfish; comments due by 10-23-00; published 10-6-00
  - Pacific Coast groundfish; comments due by 10-23-00; published 0-0- 0

Ocean and coastal resource management:
- Marine sanctuaries—
  - Commercial submarine cables; installation and maintenance; comments due by 10-23-00; published 8-23-00

DEFENSE DEPARTMENT

Federal Acquisition Regulation (FAR):
- Commercial items; nongovernmental purposes; comments due by 10-27-00; published 8-28-00
- Prompt payment and overpayment recovery; comments due by 10-27-00; published 8-28-00

ENERGY DEPARTMENT

Energy Efficiency and Renewable Energy Office

Energy conservation:
- Commercial and industrial equipment; energy efficiency program—
  - Commercial packaged boilers; test procedures and efficiency standards; comments due by 10-23-00; published 8-9-00
  - Commercial water heaters, hot water supply boilers, and unfired hot water storage tanks; test procedures and efficiency standards; comments due by 10-23-00; published 8-9-00
  - Commerical air conditioners and heat pumps; test procedures and efficiency standards; comments due by 10-23-00; published 8-9-00

ENVIRONMENTAL PROTECTION AGENCY

Air pollutants, hazardous; national emission standards:
- Cellulose products manufacturing; comments due by 10-27-00; published 8-28-00

Air quality implementation plans; approval and promulgation; various States:
- Missouri; comments due by 10-23-00; published 8-24-00
- Utah; comments due by 10-23-00; published 9-21-00

Hazardous waste program authorizations:
- Pennsylvania; comments due by 10-26-00; published 9-26-00
- Tennessee; comments due by 10-23-00; published 9-22-00
- Tennesssee; comments due by 10-23-00; published 9-22-00

Hazardous waste:
- Corrective Action Management Units; comments due by 10-23-00; published 8-22-00

Superfund program:
- National oil and hazardous substances contingency plan—
  - National priorities list update; comments due by 10-23-00; published 8-24-00

FEDERAL COMMUNICATIONS COMMISSION

Common carrier services:
- Foreign participation in U.S. telecommunications market; rules and policies; comments due by 10-24-00; published 10-10-00
- Wireless telecommunications services—
  - Gulf of Mexico Service Area; cellular service and other commercial mobile radio services; correction; comments due by 10-26-00; published 9-26-00

Radio stations; table of assignments:
- New Mexico; comments due by 10-23-00; published 9-15-00
- Various States; comments due by 10-23-00; published 9-15-00

FEDERAL EMERGENCY MANAGEMENT AGENCY

Disaster assistance:
- Cerro Grande fire assistance; comments due by 10-27-00; published 8-28-00

FEDERAL TRADE COMMISSION

Consumer financial information privacy; security program; comments due by 10-24-00; published 10-6-00

GENERAL SERVICES ADMINISTRATION

Federal Acquisition Regulation (FAR):
- Commercial items; nongovernmental purposes; comments due

by 10-27-00; published 8-28-00

Prompt payment and overpayment recovery; comments due by 10-27-00; published 8-28-00

INTERIOR DEPARTMENT

Fish and Wildlife Service

Alaska National Interest Lands Conservation Act; Title VIII implementation (subsistence priority):

Wildlife; 2001-2002 subsistence taking; comments due by 10-27-00; published 8-24-00

Endangered and threatened species:

Chiricahua leopard frog; comments due by 10-27-00; published 9-27-00

Findings on petitions, etc.—

Western sage grouse; comments due by 10-23-00; published 8-24-00

INTERIOR DEPARTMENT

Surface Mining Reclamation and Enforcement Office

Permanent program and abandoned mine land reclamation plan submissions:

Montana; comments due by 10-25-00; published 9-25-00

LABOR DEPARTMENT

Construction and nonconstruction contracts; labor standards provisions:

Davis-Bacon Act et al.; construction and work site; definitions; comments due by 10-23-00; published 9-21-00

MORRIS K. UDALL SCHOLARSHIP AND EXCELLENCE IN NATIONAL ENVIRONMENTAL POLICY FOUNDATION

Freedom of Information Act and Privacy Act; implementation; comments due by 10-26-00; published 9-26-00

NATIONAL AERONAUTICS AND SPACE ADMINISTRATION

Federal Acquisition Regulation (FAR):

Commercial items; nongovernmental purposes; comments due by 10-27-00; published 8-28-00

Prompt payment and overpayment recovery; comments due by 10-27-00; published 8-28-00

NATIONAL ARCHIVES AND RECORDS ADMINISTRATION

Freedom of Information Act; implementation; revision and reorganization of regulations; comments due by 10-23-00; published 8-23-00

NUCLEAR REGULATORY COMMISSION

Rulemaking petitions:

Gallagher, Charles T.; comments due by 10-25-00; published 8-11-00

POSTAL SERVICE

International Mail Manual:

Postal rates, fees, and mail classifications; changes; comments due by 10-26-00; published 9-26-00

TRANSPORTATION DEPARTMENT

Coast Guard

Drawbridge operations:

Florida; comments due by 10-24-00; published 8-25-00

Vessel documentation and measurement:

Vessel ownership and financing; citizenship standards; comments due by 10-25-00; published 7-27-00

TRANSPORTATION DEPARTMENT

Disadvantaged business enterprise participation in DOT financial assistance programs; airport concessions; comments due by 10-23-00; published 9-8-00

Economic regulations:

Revenue and nonrevenue passengers; definitions; comments due by 10-23-00; published 8-22-00

TRANSPORTATION DEPARTMENT

Federal Aviation Administration

Administrative regulations:

Air traffic and related services for aircraft that transit U.S.-controlled airspace but neither take off from, nor land in, U.S.; fees; comments due by 10-27-00; published 10-6-00

Airworthiness directives:

Airbus; comments due by 10-27-00; published 9-27-00

Boeing; comments due by 10-24-00; published 8-25-00

Bombardier; comments due by 10-23-00; published 10-16-00

British Aerospace; comments due by 10-27-00; published 9-26-00

Cessna; comments due by 10-23-00; published 9-7-00

Eurocopter France; comments due by 10-27-00; published 8-28-00

Fairchild; comments due by 10-27-00; published 9-1-00

Raytheon; comments due by 10-27-00; published 9-7-00

Vulcanair S.p.A.; comments due by 10-25-00; published 9-22-00

Airworthiness standards:

Special conditions—

Boeing Model 777-200 series airplanes; comments due by 10-25-00; published 9-25-00

Class D airspace; comments due by 10-25-00; published 9-25-00

Class D and Class E4 airspace; comments due by 10-23-00; published 9-22-00

Class E airspace; comments due by 10-25-00; published 9-25-00

TRANSPORTATION DEPARTMENT

National Highway Traffic Safety Administration

Motor vehicle safety standards:

Platform lift systems for accessible vehicles and platform lift installations on vehicles; comments due by 10-25-00; published 7-27-00

TRANSPORTATION DEPARTMENT

Surface Transportation Board

Rail carriers:

Carload waybill sample reporting procedures; modification; comments due by 10-23-00; published 9-8-00

LIST OF PUBLIC LAWS

This is a continuing list of public bills from the current session of Congress which have become Federal laws. It may be used in conjunction with ''P L U S'' (Public Laws Update Service) on 202–523–6641. This list is also available online at http://www.nara.gov/fedreg.

The text of laws is not published in the **Federal Register** but may be ordered in ''slip law'' (individual pamphlet) form from the Superintendent of Documents, U.S. Government Printing Office, Washington, DC 20402 (phone, 202–512–1808). The text will also be made available on the Internet from GPO Access at http://www.access.gpo.gov/nara/index.html. Some laws may not yet be available.

H.R. 4115/P.L. 106–292

To authorize appropriations for the United States Holocaust Memorial Museum, and for other purposes. (Oct. 12, 2000; 114 Stat. 1030)

H.R. 4931/P.L. 106–293

Presidential Transition Act of 2000 (Oct. 12, 2000; 114 Stat. 1035)

S. 704/P.L. 106–294

Federal Prisoner Health Care Copayment Act of 2000 (Oct. 12, 2000; 114 Stat. 1038)

Last List October 13, 2000

Public Laws Electronic Notification Service (PENS)

PENS is a free electronic mail notification service of newly enacted public laws. To subscribe, go to www.gsa.gov/archives/publaws-l.html or send E-mail to **listserv@www.gsa.gov** with the following text message:

SUBSCRIBE PUBLAWS-L Your Name.

Note: This service is strictly for E-mail notification of new laws. The text of laws is not available through this service. **PENS** cannot respond to specific inquiries sent to this address.