AUTHENTICATED
U.S. GOVERNMENT
INFORMATION
GPO

Federal Register

11–1–00 Wednesday
Vol. 65 No. 212 Nov. 1, 2000
Pages 65253–65704

The **FEDERAL REGISTER** is published daily, Monday through Friday, except official holidays, by the Office of the Federal Register, National Archives and Records Administration, Washington, DC 20408, under the Federal Register Act (44 U.S.C. Ch. 15) and the regulations of the Administrative Committee of the Federal Register (1 CFR Ch. I). The Superintendent of Documents, U.S. Government Printing Office, Washington, DC 20402 is the exclusive distributor of the official edition.

The **Federal Register** provides a uniform system for making available to the public regulations and legal notices issued by Federal agencies. These include Presidential proclamations and Executive Orders, Federal agency documents having general applicability and legal effect, documents required to be published by act of Congress, and other Federal agency documents of public interest.

Documents are on file for public inspection in the Office of the Federal Register the day before they are published, unless the issuing agency requests earlier filing. For a list of documents currently on file for public inspection, see http://www.nara.gov/fedreg.

The seal of the National Archives and Records Administration authenticates the Federal Register as the official serial publication established under the Federal Register Act. Under 44 U.S.C. 1507, the contents of the **Federal Register** shall be judicially noticed.

The **Federal Register** is published in paper and on 24x microfiche. It is also available online at no charge as one of the databases on GPO Access, a service of the U.S. Government Printing Office.

The online edition of the **Federal Register** is issued under the authority of the Administrative Committee of the Federal Register as the official legal equivalent of the paper and microfiche editions (44 U.S.C. 4101 and 1 CFR 5.10). It is updated by 6 a.m. each day the **Federal Register** is published and it includes both text and graphics from Volume 59, Number 1 (January 2, 1994) forward.

GPO Access users can choose to retrieve online **Federal Register** documents as TEXT (ASCII text, graphics omitted), PDF (Adobe Portable Document Format, including full text and all graphics), or SUMMARY (abbreviated text) files. Users should carefully check retrieved material to ensure that documents were properly downloaded.

On the World Wide Web, connect to the **Federal Register** at http://www.access.gpo.gov/nara. Those without World Wide Web access can also connect with a local WAIS client, by Telnet to swais.access.gpo.gov, or by dialing (202) 512-1661 with a computer and modem. When using Telnet or modem, type swais, then log in as guest with no password.

For more information about GPO Access, contact the GPO Access User Support Team by E-mail at gpoaccess@gpo.gov; by fax at (202) 512–1262; or call (202) 512–1530 or 1–888–293–6498 (toll free) between 7 a.m. and 5 p.m. Eastern time, Monday–Friday, except Federal holidays.

The annual subscription price for the **Federal Register** paper edition is $638, or $697 for a combined **Federal Register,** Federal Register Index and List of CFR Sections Affected (LSA) subscription; the microfiche edition of the **Federal Register** including the Federal Register Index and LSA is $253. Six month subscriptions are available for one-half the annual rate. The charge for individual copies in paper form is $9.00 for each issue, or $9.00 for each group of pages as actually bound; or $2.00 for each issue in microfiche form. All prices include regular domestic postage and handling. International customers please add 25% for foreign handling. Remit check or money order, made payable to the Superintendent of Documents, or charge to your GPO Deposit Account, VISA, MasterCard or Discover. Mail to: New Orders, Superintendent of Documents, P.O. Box 371954, Pittsburgh, PA 15250–7954.

There are no restrictions on the republication of material appearing in the **Federal Register.**

How To Cite This Publication: Use the volume number and the page number. Example: 65 FR 12345.

Printed on recycled paper.

SUBSCRIPTIONS AND COPIES

PUBLIC	
Subscriptions:	
Paper or fiche	**202–512–1800**
Assistance with public subscriptions	**512–1806**
General online information	**202–512–1530; 1–888–293–6498**
Single copies/back copies:	
Paper or fiche	**512–1800**
Assistance with public single copies	**512–1803**
FEDERAL AGENCIES	
Subscriptions:	
Paper or fiche	**523–5243**
Assistance with Federal agency subscriptions	**523–5243**

FEDERAL REGISTER WORKSHOP

THE FEDERAL REGISTER: WHAT IT IS AND HOW TO USE IT

FOR: Any person who uses the Federal Register and Code of Federal Regulations.

WHO: Sponsored by the Office of the Federal Register.

WHAT: Free public briefings (approximately 3 hours) to present:

1. The regulatory process, with a focus on the Federal Register system and the public's role in the development of regulations.
2. The relationship between the Federal Register and Code of Federal Regulations.
3. The important elements of typical Federal Register documents.
4. An introduction to the finding aids of the FR/CFR system.

WHY: To provide the public with access to information necessary to research Federal agency regulations which directly affect them. There will be no discussion of specific agency regulations.

WASHINGTON, DC

WHEN: November 14, 2000, at 9:00 a.m.

WHERE: Office of the Federal Register
Conference Room
800 North Capitol Street, NW.
Washington, DC
(3 blocks north of Union Station Metro)

RESERVATIONS: 202–523–4538

Contents

Federal Register

Vol. 65, No. 212

Wednesday, November 1, 2000

Agricultural Marketing Service
RULES
Agricultural commodities:
Pears (Bartlett) grown in—
Oregon and Washington, 65253–65255

Agriculture Department
See Agricultural Marketing Service
See Animal and Plant Health Inspection Service
See Farm Service Agency
See Forest Service

Animal and Plant Health Inspection Service
NOTICES
Agency information collection activities:
Proposed collection; comment request, 65289–65290

Army Department
NOTICES
Reports and guidance documents; availability, etc.:
Integrated Total Army Personnel Data Base Data Element Standard Version, 65298–65299

Centers for Disease Control and Prevention
NOTICES
Meetings:
Advisory Committee to the Director, 65319

Children and Families Administration
NOTICES
Grants and cooperative agreements; availability, etc.:
Early Head Start—
Select areas (Correction), 65319–65320

Commerce Department
See International Trade Administration
See National Oceanic and Atmospheric Administration
RULES
Civil monetary penalty inflation adjustments, 65260–65262
NOTICES
Agency information collection activities:
Submission for OMB review; comment request, 65293

Committee for the Implementation of Textile Agreements
NOTICES
Textile and apparel categories:
Quota and visa requirements; exemptions—
Textile and apparel articles from designated Caribbean Basin Trade Partnership Act beneficiary countries, 65296–65297

Copyright Office, Library of Congress
NOTICES
Cable royalty funds:
Cable statutory license (1998); Phase I or Phase II controversy ascertainment; comment request, 65335–65336

Corporation for National and Community Service
NOTICES
Nondiscrimination on the basis of sex in federally assisted education programs or activities:
Corporation-supported programs covered., 65297–65298

Defense Department
See Army Department
PROPOSED RULES
Acquisition regulations:
Electronic signatures, 65697–65698
NOTICES
Agency information collection activities:
Proposed collection; comment request; correction, 65298
Submission for OMB review; comment request, 65298

Education Department
RULES
Postsecondary education:
Federal Family Education Loan Program and William D. Ford Federal Direct Loan Program, 65615–65630
Federal Perkins Loan Progam, 65611–65614
Federal Perkins Loan Program, Federal Family Education Loan Program, and William D. Ford Federal Direct Loan Program, 65677–65695
Institutional Eligibility, Student Assistance General Provisions, Federal Work-Study Programs, and Federal Pell Grant Program, 65661–65676
Special Leveraging Educational Assistance Partnership Program, 65605–65609
Student assistance general provisions, Federal Family Education Loan, William D. Ford Federal Direct Loan, and Federal Pell Grant Programs, 65631–65651

Employment and Training Administration
NOTICES
Adjustment assistance:
Eramet Marietta, Inc., 65327
Levi Strauss & Co., 65327–65328
Maxco-Tech Designs, Inc., 65328
Wallowa Forest Products, 65328
NAFTA transitional adjustment assistance:
American Bag Corp., 65328
Consolidated Metco, Inc., 65328
Levi Strauss & Co., 65329
Morton Forest Products, 65329
Wallowa Forest Products et al., 65329–65331

Energy Department
See Federal Energy Regulatory Commission

Environmental Protection Agency
RULES
Superfund program:
National oil and hazardous substances contingency plan—
National priorities list update, 65271
PROPOSED RULES
Toxic substances:
Polychlorinated biphenyls (PCBs)—
PCB waste return from U.S. territories outside U.S. Customs Territory, 65653–65660
NOTICES
Agency information collection activities:
Proposed collection; comment request, 65304–65306
Submission for OMB review; comment request, 65306–65311

Clean Air Act:
Montreal Protocol; production and import phaseout of ozone depleting substances; essential use exemptions applications, 65311–65313
Meetings:
Board of Scientific Counselors, 65313
Pesticide Program Dialogue Committee, 65313–65314
Toxic and hazardous substances control:
National action control plan for level 1; pesticide, 65314–65316

Executive Office of the President
See Trade Representative, Office of United States

Farm Service Agency
NOTICES
Meetings:
National Drought Council, 65290

Federal Aviation Administration
RULES
Airworthiness directives:
Boeing, 65258–65260
International Aero Engines AG, 65255–65257
Learjet, 65257–65258

Federal Communications Commission
RULES
Radio stations; table of assignments:
Various States; correction, 65271–65272

Federal Election Commission
NOTICES
Meetings; Sunshine Act, 65316

Federal Energy Regulatory Commission
RULES
Electric utilities (Federal Power Act):
Open Access Same-Time Information System (OASIS) Phase II, 65262–65270
NOTICES
Electric rate and corporate regulation filings:
Illinois Power Co. et al., 65302–65304
Applications, hearings, determinations, etc.:
Cleco Evangeline, LLC, 65299
El Paso Natural Gas Co., 65299–65300
Koch Gateway Pipeline Co., 65300
Northern Natural Gas Co., 65300–65301
Southern Natural Gas Co., 65301–65302

Federal Maritime Commission
NOTICES
Agreements filed, etc., 65316
Casualty and nonperformance certificates:
Premier Cruises & Premier Cruise Lines, 65316–65317
Ocean transportation intermediary licenses:
Air Cargo Centralam, Inc., 65317
Logistics USA, Inc, 65317

Federal Motor Carrier Safety Administration
NOTICES
Agency information collection activities:
Proposed collection; comment request, 65372

Financial Management Service
See Fiscal Service

Fiscal Service
RULES
Fiscal agency checks and book-entry coversion of detached bearer coupons and bearer corpora, 65699–65704

Fish and Wildlife Service
PROPOSED RULES
Endangered and threatened species:
Woodland Caribou, 65287–65288

Food and Drug Administration
RULES
Animal drugs, feeds, and related products:
Narasin and tylosin phosphate, 65270–65271
NOTICES
Committees; establishment, renewal, termination, etc.:
Public advisory panels or committees—
Voting members, 65320–65321

Forest Service
NOTICES
Environmental statements; notice of intent:
Hosier National Forest, IN, 65290–65292
Meetings:
Southwest Washington Provincial Advisory Committee, 65292–65293

General Services Administration
PROPOSED RULES
Acquisition regulations:
Electronic signatures, 65697–65698

Health and Human Services Department
See Centers for Disease Control and Prevention
See Children and Families Administration
See Food and Drug Administration
See Health Care Financing Administration
See Substance Abuse and Mental Health Services Administration
NOTICES
Meetings:
Healthcare Research and Quality National Advisory Council, 65318–65319

Health Care Financing Administration
RULES
Medicare:
Physician fee schedule (2001 CY); payment policies, 65375–65603

Housing and Urban Development Department
NOTICES
Agency information collection activities:
Submission for OMB review; comment request, 65323–65324
Grant and cooperative agreement awards:
Alaska Native/Native Hawaiian Institutions Assisting Communities Program, 65324
Community Outreach Partnership Centers Program, 65324–65325
Hispanic-serving Institutions Assisting Communities Program, 65325–65326

Interior Department
See Fish and Wildlife Service
See Land Management Bureau

International Trade Administration
NOTICES
Antidumping:
Armid fiber formed of poly para-phenylene terephthalamide from—
Netherlands, 65294
Grain-oriented electrical steel from—
Electrical steel, 65295–65296
Applications, hearings, determinations, etc.:
University of—
Florida, 65296

International Trade Commission
NOTICES
Import investigations:
Gray Portland cement and clinker from—
Various countries, 65327

Labor Department
See Employment and Training Administration
See Pension and Welfare Benefits Administration

Land Management Bureau
NOTICES
Meetings:
Resource Advisory Councils—
Sierra Front-Northwestern Great Basin, 65326–65327

Library of Congress
See Copyright Office, Library of Congress

National Aeronautics and Space Administration
PROPOSED RULES
Acquisition regulations:
Electronics signatures, 65697–65698
NOTICES
Meetings:
Aero-Space Technology Advisory Committee, 65336
Patent licenses; non-exclusive, exclusive, or partially exclusive:
Image Data Compression Having Minimum Perceptual Error, 65336

National Oceanic and Atmospheric Administration
RULES
Fishery conservation and management:
Alaska; fisheries of Exclusive Economic Zone—
Pacific cod, 65272–65273
West Coast States and Western Pacific fisheries—
Coastal pelagic species, 65272

Nuclear Regulatory Commission
NOTICES
Operating licenses, amendments; no significant hazards considerations; biweekly notices, 65337–65356
Applications, hearings, determinations, etc.:
First Energy Operating Co., 65336
Starmet CMI, 65336–65337
Vermont Yankee Nuclear Power Corp., et al., 65337

Office of United States Trade Representative
See Trade Representative, Office of United States

Pension and Welfare Benefits Administration
NOTICES
Employee benefit plans; prohibited transaction exemptions:
Kwik Kopy Corporation Emplyees Welfare Benefit Plan and Trust, 65331–65335

Postal Service
PROPOSED RULES
Domestic Mail Manual:
Curbside Mailboxes Design Standards; revision, 65274–65286

Public Debt Bureau
See Fiscal Service

Public Health Service
See Centers for Disease Control and Prevention
See Food and Drug Administration
See Substance Abuse and Mental Health Services Administration

Securities and Exchange Commission
NOTICES
Investment Company Act of 1940:
Exemption applicants—
Variable Annuity Life Insurance Co., et al., 65364–65369
Applications, hearings, determinations, etc.:
PMC Capital, Inc., et al., 65356–65361
Public utility holding company filings, 65361–65364

Substance Abuse and Mental Health Services Administration
NOTICES
Federal agency urine drug testing; certified laboratories meeting minimum standards, list, 65321–65323

Surface Transportation Board
NOTICES
Railroad services abandonment:
CSX Transportation, Inc., 65373

Tennessee Valley Authority
NOTICES
Environmental statements; notice of intent:
Hardin County, TN, 65369–65370

Textile Agreements Implementation Committee
See Committee for the Implementation of Textile Agreements

Trade Representative, Office of United States
NOTICES
Generalized System of Preferences:
India product changes, 65370–65372

Transportation Department
See Federal Aviation Administration
See Federal Motor Carrier Safety Administration
See Surface Transportation Board

Treasury Department
See Fiscal Service
NOTICES
Reports and guidance documents; availability, etc.:
Treasury Telework and Flexiplace Program, 65373–65374
Victims of Trafficking and Violence Protection Act; implementation:
Payments to persons holding categories of judgments against Cuba or Iran, 65374

Part II
Department of Health and Human Services, Health Care Financing Administration, 65375–65603

Part III
Department of Education, 65605–65609

Part IV
Department of Education, 65611–65614

Part V
Department of Education, 65615–65622

Part VI
Department of Education, 65623–65630

Part VII
Department of Education, 65631–65651

Part VIII
Environmental Protection Agency, 65653–65660

Part IX
Department of Education, 65661–65676

Part X
Department of Education, 65677–65695

Part XI
Department of Defense, General Services Administration, National Aeronautics and Space Administration, 65697–65698

Part XII
Department of Treasury, Fiscal Service, 65699–65704

Reader Aids
Consult the Reader Aids section at the end of this issue for phone numbers, online resources, finding aids, reminders, and notice of recently enacted public laws.

CFR PARTS AFFECTED IN THIS ISSUE

A cumulative list of the parts affected this month can be found in the Reader Aids section at the end of this issue.

7 CFR
931.....65253

14 CFR
39 (3 documents) 65255, 65257, 65258

15 CFR
6.....65260

18 CFR
37.....65262

21 CFR
558.....65270

31 CFR
355.....65700
358.....65700

34 CFR
600.....65662
668 (2 documents) 65632, 65662
674 (2 documents) 65612, 65678
675.....65662
682 (4 documents) 65616, 65678, 65632, 65678
685 (4 documents) 65616, 65624, 65632, 65678
690 (2 documents) 65632, 65662
692.....65606

39 CFR
Proposed Rules:
111.....65274

40 CFR
300.....65271
Proposed Rules:
761.....65654

42 CFR
410.....65376
414.....65376

47 CFR
73.....65271

48 CFR
Proposed Rules:
2.....65698
4.....65698

50 CFR
660.....65698
679.....65698
Proposed Rules:
17.....65287

Rules and Regulations

Federal Register
Vol. 65, No. 212
Wednesday, November 1, 2000

This section of the FEDERAL REGISTER contains regulatory documents having general applicability and legal effect, most of which are keyed to and codified in the Code of Federal Regulations, which is published under 50 titles pursuant to 44 U.S.C. 1510.

The Code of Federal Regulations is sold by the Superintendent of Documents. Prices of new books are listed in the first FEDERAL REGISTER issue of each week.

DEPARTMENT OF AGRICULTURE

Agricultural Marketing Service

7 CFR Part 931

[Docket No. FV00–931–1 FIR]

Fresh Bartlett Pears Grown in Oregon and Washington; Decreased Assessment Rate

AGENCY: Agricultural Marketing Service, USDA.

ACTION: Final rule.

SUMMARY: The Department of Agriculture (Department) is adopting, as a final rule, with a minor change, the provisions of an interim final rule which decreased the assessment rate established for the Northwest Fresh Bartlett Pear Marketing Committee (Committee) under Marketing Order No. 931 for the 2000–2001 and subsequent fiscal periods from $0.025 to $0.02 per standard box of fresh Bartlett pears handled. The Committee is responsible for local administration of the marketing order that regulates the handling of fresh Bartlett pears grown in Oregon and Washington. Authorization to assess fresh Bartlett pear handlers enables the Committee to incur expenses that are reasonable and necessary to administer the program. The 2000–2001 fiscal period began on July 1 and ends June 30. The assessment rate will continue in effect indefinitely unless modified, suspended, or terminated.

EFFECTIVE DATE: December 1, 2000.

FOR FURTHER INFORMATION CONTACT: Teresa L. Hutchinson, Northwest Marketing Field Office, Fruit and Vegetable Programs, AMS, USDA, 1220 SW Third Avenue, suite 385, Portland, OR 97204; telephone: (503) 326–2724, Fax: (503) 326–7440 or George J. Kelhart, Marketing Order Administration Branch, Fruit and Vegetable Programs, AMS, USDA, room 2525–S, P.O. Box 96456, Washington, DC 20090–6456; telephone: (202) 720–2491, Fax: (202) 720–5698.

Small businesses may request information on complying with this regulation by contacting Jay Guerber, Marketing Order Administration Branch, Fruit and Vegetable Programs, AMS, USDA, P.O. Box 96456, room 2525–S, Washington, DC 20090–6456; telephone: (202) 720–2491, Fax: (202) 720–5698, or E-mail: Jay.Guerber@usda.gov.

SUPPLEMENTARY INFORMATION: This rule is issued under Marketing Agreement No. 141 and Order No. 931 (7 CFR part 931), regulating the handling of fresh Bartlett pears grown in Oregon and Washington hereinafter referred to as the ''order.'' The marketing agreement and order are effective under the Agricultural Marketing Agreement Act of 1937, as amended (7 U.S.C. 601–674), hereinafter referred to as the ''Act.''

The Department of Agriculture is issuing this rule in conformance with Executive Order 12866.

This rule has been reviewed under Executive Order 12988, Civil Justice Reform. Under the marketing order now in effect, fresh Bartlett pear handlers are subject to assessments. Funds to administer the order are derived from such assessments. It is intended that the assessment rate as issued herein will be applicable to all assessable fresh Bartlett pears beginning July 1, 2000, and continuing until modified, suspended, or terminated. This rule will not preempt any State or local laws, regulations, or policies, unless they present an irreconcilable conflict with this rule.

The Act provides that administrative proceedings must be exhausted before parties may file suit in court. Under section 608c(15)(A) of the Act, any handler subject to an order may file with the Secretary a petition stating that the order, any provision of the order, or any obligation imposed in connection with the order is not in accordance with law and request a modification of the order or to be exempted therefrom. Such handler is afforded the opportunity for a hearing on the petition. After the hearing the Secretary would rule on the petition. The Act provides that the district court of the United States in any district in which the handler is an inhabitant, or has his or her principal place of business, has jurisdiction to review the Secretary's ruling on the petition, provided an action is filed not later than 20 days after the date of the entry of the ruling.

This rule continues to decrease the assessment rate established for the Committee for the 2000–2001 and subsequent fiscal periods from $0.025 to $0.02 per standard box of fresh Bartlett pears handled.

The fresh Bartlett pear marketing order provides authority for the Committee, with the approval of the Department, to formulate an annual budget of expenses and collect assessments from handlers to administer the program. The members of the Committee are producers and handlers of fresh Bartlett pears. They are familiar with the Committee's needs and with the costs for goods and services in their local area and are thus in a position to formulate an appropriate budget and assessment rate. The assessment rate is formulated and discussed in a public meeting. Thus, all directly affected persons have an opportunity to participate and provide input.

For the 1999–2000 and subsequent fiscal periods, the Committee recommended, and the Department approved, an assessment rate that would continue in effect from fiscal period to fiscal period indefinitely unless modified, suspended, or terminated by the Secretary upon recommendation and information submitted by the Committee or other information available to the Secretary.

The Committee met on June 1, 2000, and unanimously recommended 2000–2001 expenditures of $81,060 and an assessment rate of $0.02 per standard box of fresh Bartlett pears handled. In comparison, last year's budgeted expenditures were $77,231. The assessment rate of $0.02 is $0.005 less than the rate previously in effect and will reduce the financial burden on handlers. At the previous rate of $0.025 per standard box and with estimated 2000–2001 fresh Bartlett pear shipments of 3,200,000 standard boxes, the projected reserve on June 30, 2001, would have exceeded the level the Committee believes to be adequate to administer the program. The Committee discussed lower assessment rates, but decided that an assessment rate of less than $0.02 would not generate the income necessary to administer the program with an adequate reserve. The decreased assessment rate is expected to

result in an operating reserve of $19,261 on June 30, 2001.

Major expenses recommended by the Committee for the 2000–2001 fiscal period include $44,468 for salaries, $4,847 for office rent, and $3,891 for health insurance. Budgeted expenses for these items in 1999–2000 were $40,433, $5,323, and $4,048, respectively.

The Committee based its recommended assessment rate on the 2000–2001 crop estimate, the 2000–2001 fiscal period expenditures estimate, and the current and projected balance of the operating reserve. With fresh Bartlett pear shipments for 2000–2001 estimated at 3,200,000 standard boxes, the $0.02 per standard box assessment rate should provide $64,000 in assessment income. Income derived from handler assessments, along with $13,060 from the Committee's authorized reserve (currently approximately $32,321) and miscellaneous income ($3,000), will be adequate to cover budgeted expenses. Funds in the reserve (estimated to be $19,261 at the end of the 2000–2001 fiscal period) will be kept within the maximum permitted by the order (approximately one fiscal year's operational expenses; § 931.42).

The assessment rate established will continue in effect indefinitely unless modified, suspended, or terminated by the Secretary upon recommendation and information submitted by the Committee or other available information.

Although this assessment rate is effective for an indefinite period, the Committee will continue to meet prior to or during each fiscal period to recommend a budget of expenses and consider recommendations for modification of the assessment rate. The dates and times of Committee meetings are available from the Committee or the Department. Committee meetings are open to the public and interested persons may express their views at these meetings. The Department will evaluate Committee recommendations and other available information to determine whether modification of the assessment rate is needed. Further rulemaking will be undertaken as necessary. The Department has reviewed and approved the Committee's 2000–2001 budget and will review those for subsequent fiscal periods and approve them as appropriate.

To facilitate communications between the Committee and growers, handlers, and other interested persons, this final rule also updates § 931.110 to include the Committee's current address. The information collection requirements for this order are currently approved under OMB No. 0581–0092 by the Office of Management and Budget in accordance with the Paperwork Reduction Act of 1995 (44 U.S.C. Chapter 35).

Pursuant to requirements set forth in the Regulatory Flexibility Act (RFA), the Agricultural Marketing Service (AMS) has considered the economic impact of this rule on small entities. Accordingly, AMS has prepared this final regulatory flexibility analysis.

The purpose of the RFA is to fit regulatory actions to the scale of business subject to such actions in order that small businesses will not be unduly or disproportionately burdened. Marketing orders issued pursuant to the Act, and the rules issued thereunder, are unique in that they are brought about through group action of essentially small entities acting on their own behalf. Thus, both statutes have small entity orientation and compatibility.

There are approximately 1,800 producers of fresh Bartlett pears in the production area and approximately 65 handlers subject to regulation under the marketing order. Small agricultural producers are defined by the Small Business Administration (13 CFR 121.201) as those having annual receipts of less than $500,000 and small agricultural service firms are defined as those whose annual receipts are less than $5,000,000.

Currently, about 98.5 percent of the fresh Bartlett pear handlers ship under $5,000,000 worth of fresh Bartlett pears and 1.5 percent ship over $5,000,000 worth on an annual basis. In addition, based on acreage, production, and producer prices reported by the National Agricultural Statistics Service, and the total number of fresh Bartlett pear producers, the average annual producer revenue is approximately $9,800. In view of the foregoing, it can be concluded that the majority of fresh Bartlett pear producers and handlers may be classified as small entities, excluding receipts from other sources.

This rule continues to decrease the assessment rate established for the Committee and collected from handlers for the 2000–2001 and subsequent fiscal periods from $0.025 to $0.02 per standard box of fresh Bartlett pears handled. The Committee unanimously recommended 2000–2001 expenditures of $81,060 and an assessment rate of $0.02 per standard box of fresh Bartlett pears handled. In comparison, last year's budgeted expenditures were $77,231. The assessment rate of $0.02 is $0.005 less than the rate previously in effect. At the rate of $0.025 per standard box and with 2000 fresh Bartlett pear shipments estimated at 3,200,000 standard boxes, the projected reserve on June 30, 2001, would have exceeded the level the Committee believes to be adequate to administer the program. The assessment rate reduction would also lessen the financial burden on handlers. The Committee decided that an assessment rate of less than $0.02 would not generate the income necessary to administer the program with an adequate reserve.

Major expenses recommended by the Committee for the 2000–2001 fiscal period include $44,468 for salaries, $4,847 for office rent, and $3,891 for health insurance. Budgeted expenses for these items in 1999–2000 were $40,433, $5,323, and $4,048, respectively.

With fresh Bartlett pear shipments for 2000–2001 estimated at 3,200,000 standard boxes, the $0.02 rate of assessment should provide $64,000 in assessment income. Income derived from handler assessments, along with $13,060 from the Committee's authorized reserve (currently approximately $32,321) and miscellaneous income ($3,000), will be adequate to cover budgeted expenses. Funds in the reserve (estimated to be $19,261 at the end of the 2000–2001 fiscal period) will be kept within the maximum permitted by the order (approximately one fiscal year's operational expenses; § 931.42).

Recent price information indicates that the producer price for the 2000–2001 marketing season will range between $8.60 and $11.30 per standard box of fresh Bartlett pears. Therefore, the estimated assessment revenue for the 2000–2001 fiscal period as a percentage of total producer revenue will range between 0.18 and 0.23 percent.

This action decreases the assessment obligation imposed on handlers. While assessments impose some additional costs on handlers, the costs are minimal and uniform on all handlers. Some of the additional costs may be passed on to producers. However, decreasing the assessment rate reduces the burden on handlers and may reduce the burden on producers.

In addition, the Committee's meeting was widely publicized throughout the fresh Bartlett pear industry and all interested persons were invited to attend the meeting and participate in Committee deliberations on all issues. Like all Committee meetings, the June 1, 2000, meeting was a public meeting and all entities, both large and small, were able to express views on this issue.

This action imposes no additional reporting or recordkeeping requirements on either small or large fresh Bartlett pear handlers. As with all Federal marketing order programs, reports and

forms are periodically reviewed to reduce information requirements and duplication by industry and public sector agencies.

The Department has not identified any relevant Federal rules that duplicate, overlap, or conflict with this rule.

An interim final rule concerning this action was published in the **Federal Register** on July 6, 2000 (65 FR 41557). Copies of that rule were also mailed or sent via facsimile to all Committee members. Finally, the interim final rule was made available through the Internet by the Office of the Federal Register. A 60-day comment period was provided for interested persons to respond to the interim final rule. The comment period ended on September 5, 2000, and no comments were received.

A small business guide on complying with fruit, vegetable, and specialty crop marketing agreements and orders may be viewed at: http://www.ams.usda.gov/fv/moab.html. Any questions about the compliance guide should be sent to Jay Guerber at the previously mentioned address in the **FOR FURTHER INFORMATION CONTACT** section.

After consideration of all relevant matter presented, including the information and recommendation submitted by the Committee and other available information, it is hereby found that this rule, as hereinafter set forth, will tend to effectuate the declared policy of the Act.

List of Subjects in 7 CFR Part 931

Marketing agreements, Pears, Reporting and recordkeeping requirements.

Accordingly, the interim final rule amending 7 CFR part 931 which was published at 65 FR 41557 on July 6, 2000, is adopted as a final rule and an additional amendment is made to part 931 as set forth below.

PART 931—FRESH BARTLETT PEARS GROWN IN OREGON AND WASHINGTON

1. The authority citation for 7 CFR part 931 continues to read as follows:

Authority: 7 U.S.C. 601–674.

2. Section 931.110 is revised to read as follows:

§ 931.110 Communications.

Unless otherwise specifically prescribed in this subpart, or in the marketing agreement and order, or unless otherwise required by the Committee, all reports, applications, submittals, requests, inspection certificates, and communications in connection with the marketing agreement or order shall be forwarded to: Northwest Fresh Bartlett Pear Marketing Committee 4382 SE International Way, Suite A, Milwaukie, OR 97222–4635.

Dated: October 6, 2000.

Robert C. Keeney,

Deputy Administrator, Fruit and Vegetable Programs.

[FR Doc. 00–27977 Filed 10–31–00; 8:45 am]

BILLING CODE 3410–02–P

DEPARTMENT OF TRANSPORTATION

Federal Aviation Administration

14 CFR Part 39

[Docket No. 2000–NE–21–AD; Amendment 39–11953; AD 2000–22–07]

RIN 2120–AA64

Airworthiness Directives; International Aero Engines AG (IAE) V2500–A5 and –D5 Series Turbofan Engines

AGENCY: Federal Aviation Administration, DOT.

ACTION: Final rule.

SUMMARY: This amendment adopts a new airworthiness directive (AD) that is applicable to certain International Aero Engines AG (IAE) V2500–A5 and –D5 series turbofan engines, identified by serial number. This amendment requires the removal of engines assembled with an improper High Pressure Turbine (HPT) module configuration from service prior to accumulating 5,100 or 7,600 cycles in the improper configuration, or at the next shop visit, depending on the type of improper HPT configuration, and restoration to type design. This amendment is prompted by reports of engines that do not conform to the engine type design, which could cause a Low Cycle Fatigue (LCF) life reduction of the HPT stage 1 disk. The actions specified by this AD are intended to restore engines to type design configuration and to prevent possible LCF failure of the HPT stage 1 disk, which could result in an uncontained engine failure and damage to the airplane.

DATES: Effective December 6, 2000. The incorporation by reference of certain publications listed in the rule is approved by the Director of the Federal Register as of December 6, 2000.

ADDRESSES: The service information referenced in this AD may be obtained from International Aero Engines AG, 400 Main Street, East Hartford, CT 06108; telephone: (860) 565–5515; fax: (860) 565–5510. This information may be examined at the FAA, New England Region, Office of the Regional Counsel, 12 New England Executive Park, Burlington, MA, or at the Office of the Federal Register, 800 North Capitol Street, NW., suite 700, Washington, DC.

FOR FURTHER INFORMATION CONTACT: Robert Ganley, Aerospace Engineer, Engine Certification Office, FAA, Engine and Propeller Directorate, 12 New England Executive Park, Burlington, MA 01803–5299; telephone: 781–238–7138, fax: 781–238–7199.

SUPPLEMENTARY INFORMATION: A proposal to amend part 39 of the Federal Aviation Regulations (14 CFR 39) to include an airworthiness directive (AD) that is applicable to International Aero Engines AG V2500–A5 and –D5 series turbofan engines was published in the **Federal Register** on June 30, 2000 (65 FR 40555). That action proposed to require the removal from service of certain V2500–A5 and –D5 series engines, identified by serial numbers, prior to accumulating 5,100 or 7,600 cycles in the improper configuration, or at the next shop visit, depending on the type of improper HPT module configuration and the restoration type design.

Comments Received

Interested persons have been afforded an opportunity to participate in the making of this amendment. Due consideration has been given to the one comment received. The comment states that the manufacturer's service documentation is the root cause of the configuration errors, and that the documentation should be designed to minimize the probability of such errors.

The FAA disagrees. The FAA believes that the manufacturer's service documentation, as currently written, is technically accurate. The documentation should not in itself be considered the root cause for configuration errors. The FAA recognizes that in some instances, service documentation may not be as clear as originally intended. The FAA continues to work with all engine manufacturers to ensure that clear and precise service documents are issued to alleviate any potential confusion by the operators.

Economic Impact

No comments were received on the economic impact contained in the proposed rules.

Regulatory Impact

This rule does not have federalism implications, as defined in Executive Order 13132, because it would not have

a substantial direct effect on the States, on the relationship between the national government and the States, or on the distribution of power and responsibilities among the various levels of government. Accordingly, the FAA has not consulted with state authorities prior to publication of this rule.

For the reasons discussed above, I certify that this action (1) is not a ''significant regulatory action'' under Executive Order 12866; (2) is not a ''significant rule'' under DOT Regulatory Policies and Procedures (44 FR 11034, February 26, 1979); and (3) will not have a significant economic impact, positive or negative, on a substantial number of small entities under the criteria of the Regulatory Flexibility Act. A final evaluation has been prepared for this action and it is contained in the Rules Docket. A copy of it may be obtained from the Rules Docket at the location provided under the caption **ADDRESSES**.

List of Subjects in 14 CFR Part 39

Air transportation, Aircraft, Aviation safety, Incorporation by reference, Safety.

Adoption of the Amendment

Accordingly, pursuant to the authority delegated to me by the Administrator, the Federal Aviation Administration amends part 39 of the Federal Aviation Regulations (14 CFR part 39) as follows:

PART 39—AIRWORTHINESS DIRECTIVES

1. The authority citation for part 39 continues to read as follows:

Authority: 49 U.S.C. 106(g), 40113, 44701.

§ 39.13 [Amended]

2. Section 39.13 is amended by adding the following new airworthiness directive:

AD–2000–22–07. International Aero Engines AG: Amendment 39–11953 Docket No. 2000–NE–21–AD.

Applicability: International Aero Engines AG (IAE) V2500–A5 and –D5 series turbofan engines listed by Serial Number (S/N) as follows:

V10011
V10035
V10036
V10039
V10040
V10041
V10054
V10067
V10079
V10080
V10084
V10111
V10121
V10123
V10124
V10130
V10131
V10139
V10166
V10172
V10174
V10180
V10199
V10221
V10341
V20001
V20013
V20017
V20019
V20023
V20033
V20037

These engines are installed on, but not limited to, Airbus Industries A319, A320, A321 series, and McDonnell Douglas MD–90 series airplanes.

Note 1: This airworthiness directive (AD) applies to each engine identified in the preceding applicability provision, regardless of whether it has been modified, altered, or repaired in the area subject to the requirements of this AD. For engines that have been modified, altered, or repaired so that the performance of the requirements of this AD is affected, the owner/operator must request approval for an alternative method of compliance in accordance with paragraph (b) of this AD. The request should include an assessment of the effect of the modification, alteration, or repair on the unsafe condition addressed by this AD; and, if the unsafe condition has not been eliminated, the request should include specific proposed actions to address it.

Compliance: Required as indicated, unless accomplished previously.

To restore the engines to type design and to prevent possible low cycle fatigue (LCF) failure of the HPT stage 1 disk, which could lead to an uncontained engine failure and damage to the airplane, accomplish the following:

Removal and Restoration of the HPT Module

(a) For those engines identified by serial numbers in Table 1 of this AD, with HPT modules built to configuration X, X′ X*, Y, or Z, remove from service in accordance with Table 1 and restore the HPT module to type design in accordance with IAE All Operators Wire (AOW) 1053, Issue 2, dated June 20, 2000.

TABLE 1

Engine serial no.	HPT module configuration	HPT hardware	Reconfigure at or prior to—
V10084, V10035, V10036, V10039, V10130, V10011, V10040, V10079, V10080, V10124, V10123, V10111, V20013, V20017, V10172, V10174, V20019, V10180, V20023.	X	High Flow Blades: Post SB72–0242 Low Flow Duct Assembly: Pre SB72–0241 Towel Bar Seals, P/N 2A0530: Installed	The earlier of the next shop visit; or accumulating either 5100 cycles in service (CIS) in configuration X, or 100 CIS after the effective date of this AD, whichever occurs later.
V20037	X′	2 High Flow Blades: Post SB72–0242 Low Flow Duct Assembly: Pre SB72–0241 Towel Bar Seals, P/N 2A0530: Not Installed	The earlier of the next shop visit; or accumulating either 7600 CIS in configuration X, or 100 CIS after the effective date of this AD, whichever occurs later.
V20001, V20033	X*	3 or fewer High Flow Blades: Post SB72–0242 Low Flow Duct Assembly: Pre SB72–0241 Towel Bar Seals, P/N 2A0530: Not Installed	Next shop visit.
V10199, V10166, V10054, V10131, V10139, V10041, V10121, V10067, V10341.	Y	High Flow Blades: Pre SB72–0242 High Flow Duct Assembly: Post SB72–0241 Towel Bar Seals, P/N 2A0530: Installed	Next shop visit.

TABLE 1—Continued

Engine serial no.	HPT module configuration	HPT hardware	Reconfigure at or prior to—
V10221	Z	Low Flow Blades: Pre SB72–0242 High Flow Duct Assembly: Post SB72–0241 Towel Bar Seals, P/N 2A0530: Installed	Next shop visit.

Alternative Methods of Compliance

(b) An alternative method of compliance or adjustment of the compliance time that provides an acceptable level of safety may be used if approved by the Manager, Engine Certification Office (ECO). Operators shall submit their requests through an appropriate FAA Principal Maintenance Inspector, who may add comments and then send it to the Manager, ECO.

Note 2: Information concerning the existence of approved alternative methods of compliance with this airworthiness directive, if any, may be obtained from the ECO.

Special Flight Permits

(c) Special flight permits may be issued in accordance with §§ 21.197 and 21.199 of the Federal Aviation Regulations (14 CFR 21.197 and 21.199) to operate the aircraft to a location where the requirements of this AD can be accomplished.

Incorporation by Reference

(d) The restoration to type design must be done in accordance with International Aero Engines AOW 1053, Issue 2, dated June 20, 2000. This incorporation by reference was approved by the Director of the Federal Register in accordance with 5 U.S.C. 552(a) and 1 CFR part 51. Copies may be obtained from International Aero Engines AG, 400 Main Street, East Hartford, CT 06108; telephone: (860) 565–5515; fax (860) 565–5510. Copies may be inspected at the FAA New England Region, Office of the Regional Counsel, 12 New England Executive Park, Burlington, MA, or at the Office of the **Federal Register**, 800 North Capitol Street, NW., suite 700, Washington, DC.

Effective Date of This AD

(e) This amendment becomes effective on December 6, 2000.

Issued in Burlington, Massachusetts, on October 23, 2000.

David A. Downey,

Assistant Manager, Engine and Propeller Directorate, Aircraft Certification Service.

[FR Doc. 00–27632 Filed 10–31–00; 8:45 am]

BILLING CODE 4910–13–P

DEPARTMENT OF TRANSPORTATION

Federal Aviation Administration

14 CFR Part 39

[Docket No. 2000–NM–132–AD; Amendment 39–11950; AD 2000–22–04]

RIN 2120–AA64

Airworthiness Directives; Learjet Model 45 Series Airplanes

AGENCY: Federal Aviation Administration, DOT.

ACTION: Final rule.

SUMMARY: This amendment adopts a new airworthiness directive (AD), applicable to certain Learjet Model 45 series airplanes, that requires repetitive application of grease to the rotating disk assembly of the nose landing gear squat switch mechanism. Application of grease to the squat switch assembly is necessary to prevent moisture contamination and subsequent formation of ice. Such ice formation could result in bending or damaging of the nose landing gear squat switch assembly, which could drive the nose wheel to an uncommanded angle against the force of the steering system. This condition, if not corrected, could result in the airplane departing from the runway at high speeds during landing.

DATES: Effective December 6, 2000.

The incorporation by reference of certain publications listed in the regulations is approved by the Director of the Federal Register as of December 6, 2000.

ADDRESSES: The service information referenced in this AD may be obtained from Learjet Inc., One Learjet Way, Wichita, Kansas 67209–2942. This information may be examined at the Federal Aviation Administration (FAA), Transport Airplane Directorate, Rules Docket, 1601 Lind Avenue, SW., Renton, Washington; or at the FAA, Wichita Aircraft Certification Office, 1801 Airport Road, Room 100, Mid-Continent Airport, Wichita, Kansas; or at the Office of the **Federal Register**, 800 North Capitol Street, NW., suite 700, Washington, DC.

FOR FURTHER INFORMATION CONTACT: Shane Bertish, Aerospace Engineer, Systems and Equipment Branch, ACE–116W, FAA, Small Airplane Directorate, Wichita Aircraft Certification Office, 1801 Airport Road, Room 100, Mid-Continent Airport, Wichita, Kansas 67209; telephone (316) 946–4156; fax (316) 946–4407.

SUPPLEMENTARY INFORMATION: A proposal to amend part 39 of the Federal Aviation Regulations (14 CFR part 39) to include an airworthiness directive (AD) that is applicable to certain Learjet Model 45 series airplanes was published in the **Federal Register** on June 27, 2000 (65 FR 39578). That action proposed to require repetitive application of grease to the rotating disk assembly of the nose landing gear squat switch mechanism.

Comments

Interested persons have been afforded an opportunity to participate in the making of this amendment. No comments were submitted in response to the proposal or the FAA's determination of the cost to the public.

Conclusion

The FAA has determined that air safety and the public interest require the adoption of the rule as proposed.

Interim Action

This is considered to be interim action. The manufacturer has advised that it currently is developing a modification that will positively address the unsafe condition addressed by this AD. Once this modification is developed and approved, and parts are available, the FAA may consider additional rulemaking.

Cost Impact

There are approximately 69 Learjet Model 45 series airplanes of the affected design in the worldwide fleet. The FAA estimates that 45 airplanes of U.S. registry will be affected by this AD, that it will take approximately 1 work hour per airplane to accomplish the required actions, and that the average labor rate is $60 per work hour. Based on these figures, the cost impact of the AD on U.S. operators is estimated to be $2,700, or $60 per airplane, per application.

The cost impact figure discussed above is based on assumptions that no operator has yet accomplished any of

the requirements of this AD action, and that no operator would accomplish those actions in the future if this AD were not adopted. The cost impact figures discussed in AD rulemaking actions represent only the time necessary to perform the specific actions actually required by the AD. These figures typically do not include incidental costs, such as the time required to gain access and close up, planning time, or time necessitated by other administrative actions.

Regulatory Impact

The regulations adopted herein will not have a substantial direct effect on the States, on the relationship between the national Government and the States, or on the distribution of power and responsibilities among the various levels of government. Therefore, it is determined that this final rule does not have federalism implications under Executive Order 13132.

For the reasons discussed above, I certify that this action (1) is not a ''significant regulatory action'' under Executive Order 12866; (2) is not a ''significant rule'' under DOT Regulatory Policies and Procedures (44 FR 11034, February 26, 1979); and (3) will not have a significant economic impact, positive or negative, on a substantial number of small entities under the criteria of the Regulatory Flexibility Act. A final evaluation has been prepared for this action and it is contained in the Rules Docket. A copy of it may be obtained from the Rules Docket at the location provided under the caption **ADDRESSES.**

List of Subjects in 14 CFR Part 39

Air transportation, Aircraft, Aviation safety, Incorporation by reference, Safety.

Adoption of the Amendment

Accordingly, pursuant to the authority delegated to me by the Administrator, the Federal Aviation Administration amends part 39 of the Federal Aviation Regulations (14 CFR part 39) as follows:

PART 39—AIRWORTHINESS DIRECTIVES

1. The authority citation for part 39 continues to read as follows:

Authority: 49 U.S.C. 106(g), 40113, 44701.

§ 39.13 [Amended]

2. Section 39.13 is amended by adding the following new airworthiness directive:

2000–22–04 Learjet: Amendment 39–11950. Docket 2000–NM–132–AD.

Applicability: Model 45 series airplanes, serial numbers 45–001 through 45–114 inclusive; certificated in any category.

Note 1: This AD applies to each airplane identified in the preceding applicability provision, regardless of whether it has been modified, altered, or repaired in the area subject to the requirements of this AD. For airplanes that have been modified, altered, or repaired so that the performance of the requirements of this AD is affected, the owner/operator must request approval for an alternative method of compliance in accordance with paragraph (b) of this AD. The request should include an assessment of the effect of the modification, alteration, or repair on the unsafe condition addressed by this AD; and, if the unsafe condition has not been eliminated, the request should include specific proposed actions to address it.

Compliance: Required as indicated, unless accomplished previously.

To prevent the airplane from departing the runway at high speeds during landing due to bending and damage to the squat switch assembly of the nose landing gear, accomplish the following:

Application of Grease

(a) Within 30 days after the effective date of this AD, apply grease to the rotating disk assembly of the squat switch mechanism of the nose wheel in accordance with Bombardier Aerospace Service Information Letter SIL 32–016, dated March 30, 2000. Thereafter, repeat this application at intervals not to exceed 30 days.

Alternative Methods of Compliance

(b) An alternative method of compliance or adjustment of the compliance time that provides an acceptable level of safety may be used if approved by the Manager, Wichita Aircraft Certification Office (ACO), FAA. Operators shall submit their requests through an appropriate FAA Principal Maintenance Inspector, who may add comments and then send it to the Manager, Wichita ACO.

Note 2: Information concerning the existence of approved alternative methods of compliance with this AD, if any, may be obtained from the Wichita ACO.

Special Flight Permit

(c) Special flight permits may be issued in accordance with §§ 21.197 and 21.199 of the Federal Aviation Regulations (14 CFR 21.197 and 21.199) to operate the airplane to a location where the requirements of this AD can be accomplished.

Incorporation by Reference

(d) The application of grease shall be done in accordance with Bombardier Aerospace Service Information Letter SIL 32–016, dated March 30, 2000. This incorporation by reference was approved by the Director of the Federal Register in accordance with 5 U.S.C. 552(a) and 1 CFR part 51. Copies may be obtained from Learjet Inc., One Learjet Way, Wichita, Kansas 67209–2942. Copies may be inspected at the FAA, Transport Airplane Directorate, 1601 Lind Avenue, SW., Renton, Washington; or at the FAA, Wichita Aircraft Certification Office, 1801 Airport Road, Room 100, Mid-Continent Airport, Wichita, Kansas; or at the Office of the Federal Register, 800 North Capitol Street, NW., suite 700, Washington, DC.

Effective Date

(e) This amendment becomes effective on December 6, 2000.

Issued in Renton, Washington, on October 23, 2000.

Donald L. Riggin,

Acting Manager, Transport Airplane Directorate, Aircraft Certification Service.

[FR Doc. 00–27630 Filed 10–31–00; 8:45 am]

BILLING CODE 4910–13–P

DEPARTMENT OF TRANSPORTATION

Federal Aviation Administration

14 CFR Part 39

[Docket No. 99–NM–69–AD; Amendment 39–11906; AD 2000–19–05]

RIN 2120–AA64

Airworthiness Directives; Boeing Model 737–100, –200, –200C, –300, –400, and –500 Series Airplanes

AGENCY: Federal Aviation Administration, DOT.

ACTION: Final rule; correction.

SUMMARY: This document corrects information in an existing airworthiness directive (AD) that applies to certain Boeing Model 737–100, –200, –200C, –300, –400, and –500 series airplanes. That AD supersedes AD 99–05–15, amendment 39–11063, to require a one-time inspection of the attachment nuts at each end attachment of the elevator tab push rods to measure run-on torque values, and corrective actions, if necessary. That AD also requires replacement of all existing bolts and attachment nuts at the forward and aft end attachment of each elevator tab push rod with new bolts and self-locking castellated nuts with cotter pins. This document corrects an inadvertent error regarding the compliance time for certain requirements of that AD. This correction is necessary to provide an adequate compliance time for the replacement of certain parts.

DATES: Effective October 25, 2000.

The incorporation by reference of Boeing Service Letter 737–SL–27–118–D, dated December 17, 1999, was approved previously by the Director of the **Federal Register** as of October 25, 2000 (65 FR 56783, September 20, 2000).

The incorporation by reference of Boeing Alert Service Bulletin 737–27A1205, dated August 28, 1997, was approved previously by the Director of

the **Federal Register** as of March 23, 1999 (64 FR 10935, March 8, 1999).

FOR FURTHER INFORMATION CONTACT: Scott Fung, Aerospace Engineer, Airframe Branch, ANM–120S, FAA, Seattle Aircraft Certification Office, 1601 Lind Avenue, SW., Renton, Washington 98055–4056; telephone (425) 227–1221; fax (425) 227–1181.

SUPPLEMENTARY INFORMATION: On September 12, 2000, the Federal Aviation Administration (FAA) issued AD 2000–19–05, amendment 39–11906 (65 FR 56783, September 20, 2000), which applies to certain Boeing Model 737–100, –200, –200C, –300, –400, and –500 series airplanes. That AD supersedes AD 99–05–15, amendment 39–11063, to require a one-time inspection of the attachment nuts at each end attachment of the elevator tab push rods to measure run-on torque values, and corrective actions, if necessary. That AD also requires replacement of all existing bolts and attachment nuts at the forward and aft end attachment of each elevator tab push rod with new bolts and self-locking castellated nuts with cotter pins. That AD was prompted by reports of excessive high-frequency airframe vibration during flight, with consequent structural damage to the elevator tab, elevator, and stabilizer. The actions required by that AD are intended to prevent detachment of an elevator tab push rod due to a detached nut at either end attachment of a push rod, which could result in excessive high-frequency airframe vibration during flight; consequent structural damage to the elevator tab, elevator, and horizontal stabilizer; and reduced controllability of the airplane.

Need for the Correction

Since the issuance of AD 2000–19–05, the FAA has reviewed the wording in paragraph (b) of that AD and finds that there was an inadvertent error in the compliance time. In the preamble of AD 2000–19–05, the FAA concurred with a commenter's request to extend the compliance time in paragraph (b) from, ''Within 12 months or 4,000 flight cycles after the effective date of this AD, whichever occurs first: * * *'' to ''Within 24 months or 4,000 flight cycles after the effective date of this AD, whichever occurs first: * * *'' However, in the final rule the FAA inadvertently retained the proposed compliance time of ''Within 12 months * * *'' This AD corrects the compliance time for paragraph (b) of that AD to read, ''Within 24 months or 4,000 flight cycles after the effective date of this AD, whichever occurs first: * * *''

Correction of Publication

This document corrects the error and correctly adds the AD as an amendment to § 39.13 of the Federal Aviation Regulations (14 CFR 39.13).

The AD is reprinted in its entirety for the convenience of affected operators. The effective date of the AD remains October 25, 2000.

Since this action only corrects an error, which extends the compliance time in that AD, it has no adverse economic impact and imposes no additional burden on any person. Therefore, the FAA has determined that notice and public procedures are unnecessary.

List of Subject in 14 CFR Part 39

Air transportation, Aircraft, Aviation safety, Incorporation by reference, Safety.

Adoption of the Correction

Accordingly, pursuant to the authority delegated to me by the Administrator, the Federal Aviation Administration amends part 39 of the Federal Aviation Regulations (14 CFR part 39) as follows:

PART 39—AIRWORTHINESS DIRECTIVES

1. The authority citation for part 39 continues to read as follows:

Authority: 49 U.S.C. 106(g), 40113, 44701.

§ 39.13 [Corrected]

2. Section 39.13 is amended by correctly adding the following airworthiness directive (AD):

2000–19–05 Boeing: Amendment 39–11906. Docket 99–NM–69–AD. Supersedes AD 99–05–15, Amendment 39–11063.

Applicability: Model 737–100, –200, –200C, –300, –400, and –500 series airplanes; line numbers 1 through 2939 inclusive; certificated in any category.

Note 1: This AD applies to each airplane identified in the preceding applicability provision, regardless of whether it has been modified, altered, or repaired in the area subject to the requirements of this AD. For airplanes that have been modified, altered, or repaired so that the performance of the requirements of this AD is affected, the owner/operator must request approval for an alternative method of compliance in accordance with paragraph (c)(1) of this AD. The request should include an assessment of the effect of the modification, alteration, or repair on the unsafe condition addressed by this AD; and, if the unsafe condition has not been eliminated, the request should include specific proposed actions to address it.

Compliance: Required as indicated, unless accomplished previously.

To prevent detachment of an elevator tab push rod due to a detached nut at either end attachment of a push rod, which could result in excessive high-frequency airframe vibration during flight; consequent structural damage to the elevator tab, elevator, and horizontal stabilizer; and reduced controllability of the airplane; accomplish the following:

Restatement of Requirements of AD 99–05–15

One-Time Inspection

(a) Within 90 days after March 23, 1999 (the effective date of AD 99–05–15, amendment 39–11063): Perform a one-time inspection of all attachment nuts at each end of each elevator tab push rod to measure the run-on torque values of the nuts, in accordance with Boeing Alert Service Bulletin 737–27A1205, dated August 28, 1997.

Corrective Actions

(1) If the run-on torque value of any end attachment nut is within the limits specified in the alert service bulletin, prior to further flight, ensure that the final seating torque of the attachment nuts is within the torque values specified in the alert service bulletin.

(2) If the run-on torque value of any end attachment nut is outside the limits specified in the alert service bulletin, prior to further flight, replace all existing bolts and attachment nuts at each end of each elevator tab push rod with new bolts and self-locking castellated nuts that have cotter pins installed as a secondary locking feature, in accordance with Boeing Service Letter 737–SL–27–118–D, dated December 17, 1999, and ensure that the final seating torque of the nuts is within the torque values specified in the service letter.

Note 2: Accomplishment of the inspection and ensuring adequate final seating torque values prior to the effective date of this AD in accordance with Boeing All-Base Telex M–7272–97–0897, dated February 13, 1997, are considered acceptable for compliance with the actions specified in paragraphs (a) and (a)(1) of this AD for only the forward attachment nuts.

New Requirements of This AD

Replacement

(b) Within 24 months or 4,000 flight cycles after the effective date of this AD, whichever occurs first: Replace all existing bolts and attachment nuts at the forward and aft end attachment of each elevator tab push rod with new bolts and self-locking castellated nuts that have cotter pins installed as a secondary locking feature, in accordance with Boeing Service Letter 737–SL–27–118–D, dated December 17, 1999.

Note 3: Replacements accomplished prior to the effective date of this AD in accordance

with Boeing Service Letter 737–SL–27–118–A, dated November 14, 1997; 737–SL–27–118–B, dated April 14, 1999; or 737–SL–27–118–C, dated May 19, 1999; are considered acceptable for compliance with paragraphs (a)(2) and (b) of this AD.

Alternative Methods of Compliance

(c)(1) An alternative method of compliance or adjustment of the compliance time that provides an acceptable level of safety may be used if approved by the Manager, Seattle Aircraft Certification Office (ACO), FAA. Operators shall submit their requests through an appropriate FAA Principal Maintenance Inspector, who may add comments and then send it to the Manager, Seattle ACO.

(2) Alternative methods of compliance, approved previously in accordance with AD 99–05–15, amendment 39–11063, are considered to be approved as alternative methods of compliance with paragraph (a) of this AD only.

Note 4: Information concerning the existence of approved alternative methods of compliance with this AD, if any, may be obtained from the Seattle ACO.

Special Flight Permits

(d) Special flight permits may be issued in accordance with §§ 21.197 and 21.199 of the Federal Aviation Regulations (14 CFR 21.197 and 21.199) to operate the airplane to a location where the requirements of this AD can be accomplished.

Incorporation by Reference

(e) The actions shall be done in accordance with Boeing Alert Service Bulletin 737–27A1205, dated August 28, 1997, and Boeing Service Letter 737–SL–27–118–D, dated December 17, 1999.

(1) The incorporation by reference of Boeing Service Letter 737–SL–27–118–D, dated December 17, 1999, was approved previously by the Director of the Federal Register as of October 25, 2000 (65 FR 56783, September 20, 2000).

(2) The incorporation by reference of Boeing Alert Service Bulletin 737–27A1205, dated August 28, 1997, was approved previously by the Director of the Federal Register as of March 23, 1999 (64 FR 10935, March 8, 1999).

(3) Copies may be obtained from Boeing Commercial Airplane Group, P.O. Box 3707, Seattle, Washington 98124–2207. Copies may be inspected at the FAA, Transport Airplane Directorate, 1601 Lind Avenue, SW., Renton, Washington; or at the Office of the Federal Register, 800 North Capitol Street, NW., suite 700, Washington, DC.

(f) The effective date of this amendment remains October 25, 2000.

Issued in Renton, Washington, on October 24, 2000.

Donald L. Riggin,

Acting Manager, Transport Airplane Directorate, Aircraft Certification Service.

[FR Doc. 00–27791 Filed 10–31–00; 8:45 am]

BILLING CODE 4910–13–P

DEPARTMENT OF COMMERCE

Office of the Secretary

15 CFR Part 6

[Docket No.: 001024293–0293–01]

RIN 0690–AA31

Civil Monetary Penalties; Adjustment for Inflation

AGENCY: Office of the Secretary, Commerce.

ACTION: Final rule.

SUMMARY: This final rule is being issued to adjust each civil monetary penalty provided by law within the jurisdiction of the Department of Commerce (the Department). The Federal Civil Penalties Inflation Adjustment Act of 1990, as amended by the Debt Collection Improvement Act of 1996, requires the head of each agency to adjust its civil monetary penalties for inflation no later than October 23, 1996, and at least once every four years thereafter. These inflation adjustments will apply only to violations that occur after the effective date of this rule.

DATES: This rule is effective November 1, 2000.

ADDRESSES: Office of Financial Management, Department of Commerce, 14th and Constitution Avenue, MS 6827, Washington, DC 20230.

FOR FURTHER INFORMATION CONTACT: Lisa Casias, 202–482–0766.

SUPPLEMENTARY INFORMATION: The Federal Civil Penalties Inflation Adjustment Act of 1990, (Pub. L. 101–410), provided for the regular evaluation of civil monetary penalties to ensure that they continued to maintain their deterrent value and that penalty amounts due to the Federal Government were properly accounted for and collected. On April 26, 1996, the Federal Civil Penalties Inflation Adjustment Act of 1990 was amended by the Debt Collection Improvement Act of 1996 (Pub. L. 104–134) to require each agency to issue regulations to adjust its civil monetary penalties (CMP) for inflation at least every four years. The amendment further provides that any resulting increases in a CMP due to the inflation adjustment should apply only to the violations that occur subsequent to the date of the publication in the **Federal Register** of the increased amount of the CMP. The first inflation adjustment of any penalty shall not exceed ten percent of such penalty.

On October 24, 1996, the Commerce Department published in the **Federal Register** a schedule of CMP adjusted for inflation as required by law. In one instance, the initial CMP inflation adjustment was zero, and was published accordingly. In two cases the adjustment was nine percent. All other CMP adjusted at that time were increased by the ten percent maximum amount. In the October 24, 1996, publication, the following then existing CMP were not included:

15 U.S.C. 5408 (b)(1), Fastener Quality Act

16 U.S.C. 1174 (b), Fur Seal Act Amendments of 1983

16 U.S.C. 1385 (e), Dolphin Protection Consumer Information Act

16 U.S.C. 2465 (a), Antarctic Protection Act of 1990

16 U.S.C. 4016 (b)(1)(B), Fish and Seafood Promotion Act of 1986

16 U.S.C. 5010 (a), North Pacific Anadromous Stocks Act of 1992

16 U.S.C. 5103 (b)(2), Atlantic Coastal Fisheries Cooperative Management Act

16 U.S.C. 5507 (a), High Seas Fishing Compliance Act of 1995

16 U.S.C. 5606 (b), Northwest Atlantic Fisheries Convention Act of 1995

22 U.S.C. 1978 (e), Fishermen's Protective Act of 1967

By this publication CMP are again being adjusted for inflation as prescribed by law. In the case of those CMP listed above that were not previously adjusted, the CMP adjustment in this document is subject to the initial inflation adjustment limitation of ten percent, and each is being adjusted by that amount. Next, in the October 24, 1996, publication, the CMP included in the Atlantic Striped Bass Conservation Act (16 U.S.C. 1851 Note (Sec. 5)(c)(1)), was adjusted from $1,000 to $1,100. Thus, it is no longer subject to the ten percent limitation for first time adjustments. However, in 1997, this CMP was legislatively changed to be the same amount as the CMP established in the Magnuson-Stevens Fishery Conservation and Management Act (16 U.S.C. 1858(a)), which in 1997 was $110,000. As a consequence, the CMP for the Atlantic Striped Bass Conservation Act is being adjusted in this publication from the

1997 value of $110,000 to $114,000. Third, several new CMP regarding the Chemical Weapons Convention (CWC) are included in this publication and are being adjusted, though each adjustment is less than the ten percent limitation applicable to first time adjustments. In one instance, the CMP for import restriction violations under the CWC, the initial inflation adjustment is zero percent. Finally, two CMP for violations of the Public Works and Economic Development Act (PWEDA), for false statements and embezzlement, respectively, have been deleted. These CMP were deleted due to an amendment to PWEDA that made the penalties for these actions criminal.

A civil monetary penalty is defined as any penalty, fine, or other sanction that:

1. Is for a specific monetary amount as provided by Federal law, or has a maximum amount provided for by Federal law; and,

2. Is assessed or enforced by an agency pursuant to Federal law; and,

3. Is assessed or enforced pursuant to an administrative proceeding or a civil action in the Federal courts.

This regulation adjusts the civil penalties that are established by law and assessed or enforced by the Department.

The actual penalty assessed for a particular violation is dependent upon a variety of factors. For example, the National Oceanic and Atmospheric Administration (NOAA) Civil Administrative Penalty Schedule (the Schedule), a compilation of internal guidelines that are used when assessing penalties for violations for most of the statutes NOAA enforces, will be adjusted in a manner consistent with this regulation to maintain the deterrent effect of the penalties recommended therein. The penalty ranges in the Schedule are intended to aid enforcement attorneys in determining the appropriate penalty to assess for a particular violation. Pursuant to the notice published in the **Federal Register** (59 FR 19160, April 22, 1994), the Schedule is maintained and made available for inspection by the public at specific locations.

The inflation adjustment was determined pursuant to the methodology prescribed by Public Law 101–410, which requires the maximum CMP, or the minimum and maximum CMP, as applicable, to be increased by the cost-of-living adjustment. The term ''cost-of-living adjustment'' was defined in Public Law 104–34 to mean the percentage for each CMP by which the Consumer Price Index (CPI) for June of the calendar year preceding the adjustment exceeds the CPI for the month of June of the calendar year in which the amount of such CMP was last set or adjusted pursuant to law. For the purpose of computing the inflation adjustments, the CPI for June of the calendar year preceding the adjustment means the CPI for June of 1999.

The raw inflation adjustment amounts are required by Public Law 101–410 to be rounded as follows:

1. If the increase is greater than $0 and less than or equal to $100, round to the nearest multiple of $10.

2. If the increase is greater than $100 and less than or equal to $1,000, round to nearest multiple of $100.

3. If the increase is greater than $1,000 and less than or equal to $10,000, round to the nearest multiple of $1,000.

4. If the increase is greater than $10,000 and less than or equal to $100,000, round to the nearest multiple of $5,000.

5. If the increase is greater than $100,000 and less than or equal to $200,000, round to the nearest multiple of $10,000.

6. If the increase is greater than $200,000, round to the nearest multiple of $25,000.

Public Law 101–410 requires each rounded increase to be added to the minimum or maximum penalty amount being adjusted, and the total is the amount of such penalty, as adjusted, subject to the ten percent limitation provided by Public Law 104–134 for the First Adjustments.

Rulemaking Requirements

It has been determined that this rule is not significant for purposes of Executive Order 12866. The Department for good cause finds that notice and opportunity for comment and the 30-day delayed effective date are unnecessary (5 U.S.C. 553(b)(B) and 5 U.S.C. 553(d)(3)) for this rulemaking. It is unnecessary to ask for notice and comment and delay the effective date because the Debt Collection Improvement Act of 1996 (the Act) requires the head of each agency to adjust its civil monetary penalties for inflation by regulation no later than October 23, 1996, and at least every four years thereafter, and the Federal Civil Monetary Penalty Inflation Adjustment Act of 1990, as amended by the Act, states how to calculate the inflation adjustment. This rule merely adjusts the Department's CMP according to the statutory requirements. The Department does not have any discretion in making the adjustments.

Because notice and opportunity for comment are not required by 5 U.S.C. 553, or any other law, a Regulatory Flexibility Analysis is not required and was not prepared for purposes of the Regulatory Flexibility Act. This rule does not contain information collection requirements for purposes of the Paperwork Reduction Act.

List of Subjects 15 CFR Part 6

Law enforcement, Penalties.

James L. Taylor,

Director for Financial Management and Deputy Chief Financial Officer.

For the reasons set forth in the preamble, subtitle A of Title 15 of the Code of Federal Regulations is amended as follows:

PART 6—CIVIL MONETARY PENALTY INFLATION ADJUSTMENTS

1. The authority citation for Part 6 continues to read as follows:

Authority: Sec. 4, as amended, and sec. 5, Pub. L. 101–410, 104 Stat. 890 (28 U.S.C. 2461 note); Pub. L. 104–134, 110 Stat. 1321, 28 U.S.C. 2461 note.

2. Section 6.4 is revised to read as follows:

§ 6.4 Adjustments to penalties.

The civil monetary penalties provided by law within the jurisdiction of the respective agencies or bureaus of the *Department,* as set forth below in this section, are hereby adjusted in accordance with the inflation adjustment procedures prescribed in *Section Five,* from the amounts of such penalties in effect prior to November 1, 2000, to the amounts of such penalties, as thus adjusted.

(a) Bureau of Export Administration.

(1) 15 U.S.C. 5408(b)(1), Fastener Quality Act, violation: from $25,000 to $27,500.

(2) 50 U.S.C. 1705(b), International Emergency Economic Powers Act, as invoked by E.O. 12924 (August 19, 1994) and E.O. 12938 (November 14, 1994), Export Administration Regulations violation: from $11,000 to $12,000.

(3) 50 U.S.C. 1707(b), International Emergency Economic Powers Act, as invoked by E.O. 12924 (August 19, 1994) and E.O. 12938 (November 14, 1994), Chemical Weapons Convention Implementation Act (See E.O. 13128, June 25, 1999), Chemical Weapons Convention, Import restriction violation: from $11,000 to $11,000.

(4) 22 U.S.C. 7661(a)(1)(A), Chemical Weapons Convention Implementation Act, Prohibited acts relating to inspection violation: from $25,000 to $25,500.

(5) 22 U.S.C. 7661(a)(1)(B), Chemical Weapons Convention Implementation Act, Record keeping violation: from $5,000 to $5,100.

(6) 50 U.S.C. app. 2410(c), Export Administration Act, See E.O. 12851(June 11, 1993), Non-national security violation: from $11,000 to $12,000.

(7) 50 U.S.C. app. 2410(c), Export Administration Act, See E.O. 12851 (June 11, 1993), and Section 38 Arms Export Control Act, National security violation: from $110,000 to $120,000.

(b) Economic Development Administration.

(1) 19 U.S.C. 2349, Trade Act of 1974, False statement, *etc.*: from $5,500 to $6,000.

(2) [Reserved]

(c) Economics and Statistics Administration (ESA)/Census.

(1) 13 U.S.C. 304, Delinquency on delayed filing of export documentation: from $110 per/day (up to $1,100) to $120 per/day (up to $1,200).

(2) 13 U.S.C. 305, Collection of foreign trade statistics violation: from $1,100 to $1,200.

(d) ESA/Bureau of Economic Analysis.

(1) 22 U.S.C. 3105(a), International Investment and Trade in Services Act, Failure to furnish information: from a minimum of $2,750 to $3,000, and from a maximum of $27,500 to $30,000.

(2) [Reserved]

(e) Import Administration.

(1) 19 U.S.C. 81s, Foreign Trade Zone violation: from $1,100 to $1,200.

(2) 19 U.S.C. 1677f(f)(4), North American Free Trade Agreement Protective Order violation: from $110,000 to $120,000.

(f) National Oceanic and Atmospheric Administration.

(1) 15 U.S.C. 5623(a)(3), Land Remote Sensing Policy Act of 1992, violation: from $10,900 to $11,900.

(2) 15 U.S.C. 5658(c), Land Remote Sensing Policy Act of 1992, violation: from $10,900 to $11,900.

(3) 16 U.S.C. 773f(3), Northern Pacific Halibut Act of 1982, violation: from $27,500 to $30,000.

(4) 16 U.S.C. 783, Sponge Act (1914), violation: from $550 to $600.

(5) 16 U.S.C. 957, Tuna Conventions Act of 1950 (1962):

(i) Violation/subsection c: from $110,000 to $120,000.

(ii) Violation/subsection a: from $27,500 to $30,000.

(iii) Violation/subsection b: from $1,100 to $1,200.

(iv) Subsequent violation/subsection a: from $55,000 to $60,000

(v) Subsequent violation/subsection b: from $5,500 to $6,000

(6) 16 U.S.C. 971e(e)(1), Atlantic Tunas Convention Act of 1975 (1995), violation: from $100,000 to $109,000.

(7) 16 U.S.C. 972f(b), Eastern Pacific Tuna Licensing Act of 1984:

(i) Violation/subsections (a)(1)–(3): from $27,500 to $30,000.

(ii) Violation/subsections (a)(4)–(5): from $5,500 to $6,000.

(iii) Subsequent violation/subsections (a)(1)–(3): from $55,000 to $60,000.

(iv) Subsequent violation/subsections (a)(4)–(5): from $5,500 to $6,000.

(v) Violation/subsection (a)(6): from $110,000 to $120,000.

(8) 16 U.S.C. 973f(a), South Pacific Tuna Act of 1988, violation: from $275,000 to $300,000.

(9) 16 U.S.C. 1174(b), Fur Seal Act Amendments of 1983, violation: from $10,000 to $11,000.

(10) 16 U.S.C. 1375(a)(1), Marine Mammal Protection Act of 1972, violation: from $11,000 to $12,000.

(11) 16 U.S.C. 1385(e), Dolphin Protection Consumer Information Act (1990), violation: from $100,000 to $110,000.

(12) 16 U.S.C. 1437(c)(1), National Marine Sanctuaries Act (1992), violation: from $109,000 to $119,000.

(13) 16 U.S.C. 1540(a)(1), Endangered Species Act of 1973:

(i) Knowing violations (1988): from $27,500 to $30,000.

(ii) Otherwise violations (1978): from $550 to $600.

(iii) Other knowing violations (1988): from $13,200 to $14,000.

(14) 16 U.S.C. 1851 Note (Sec. 5)(c)(1), Atlantic Striped Bass Conservation Act (1997), violation: from $110,000 to $114,000.

(15) 16 U.S.C. 1858 (a), Magnuson-Stevens Fishery Conservation and Management Act (1990), violation: from $110,000 to $120,000.

(16) 16 U.S.C. 2437(a)(1), Antarctic Marine Living Resources Convention Act of 1984:

(i) Knowing violation: from $11,000 to $12,000.

(ii) Violation: from $5,500 to $6,000.

(17) 16 U.S.C. 2465(a), Antarctic Protection Act of 1990:

(i) Knowing violation: from $10,000 to $11,000.

(ii) Violation: from $5,000 to $5,500.

(18)16 U.S.C. 3373(a), Lacey Act Amendments of 1981:

(i) Other than marking violation: from $11,000 to $12,000.

(ii) Marking violation: from $275 to $300.

(iii) Sale and purchase violation (1988): from $11,000 to $12,000.

(iv) False labeling violation (1988): from $11,000 to $12,000.

(19) 16 U.S.C. 3606(b), Atlantic Salmon Convention Act of 1982 (1990), violation: from $110,000 to $120,000.

(20) 16 U.S.C. 3637(b), Pacific Salmon Treaty Act of 1985 (1990), violation: from $110,000 to $120,000.

(21) 16 U.S.C. 4016(b)(1)(B) Fish and Seafood Promotion Act of 1986, violation: from $500 (up to $5,000) to $550 (up to $5,500).

(22) 16 U.S.C. 5010(a), North Pacific Anadromous Stocks Act of 1992, violation: from $100,000 to $110,000.

(23) 16 U.S.C. 5103(b)(2), Atlantic Coastal Fisheries Cooperative Management Act (1993), violation: from $100,000 to $110,000.

(24) 16 U.S.C. 5507(a), High Seas Fishing Compliance Act of 1995, violation: from $100,000 to $109,000.

(25) 16 U.S.C. 5606(b), Northwest Atlantic Fisheries Convention Act of 1995, violation: from $100,000 to $109,000.

(26) 22 U.S.C. 1978(e), Fishermen's Protective Act of 1967 (1971):

(i) Violation: from $10,000 to $11,000

(ii) Subsequent violation: from $25,000 to $27,500.

(27) 30 U.S.C. 1462(a), Deep Seabed Hard Mineral Resources Act (1980), violation: from $27,500 to $30,000.

(28) 42 U.S.C. 9152(c)(1), Ocean Thermal Energy Conversion Act of 1980, violation: from $27,500 to $30,000.

3. Section 6.5 is revised to read as follows:

§ 6.5 Effective date of adjustments.

The inflation adjustments made by § 6.4 of this part, of the penalties there specified, are effective on November 1, 2000, and said penalties, as thus adjusted by the inflation adjustments made by § 6.4 of this part, shall apply only to violations occurring after November 1, 2000, and before the effective date of any future inflation adjustment thereto made subsequent to November 1, 2000, as provided in § 6.6 of this part.

[FR Doc. 00–28007 Filed 10–31–00; 8:45 am]

BILLING CODE 3510–FA–P

DEPARTMENT OF ENERGY

Federal Energy Regulatory Commission

18 CFR Part 37

[Docket No. RM95–9–013]

Open Access Same-Time Information System and Standards of Conduct

Issued October 26, 2000.

AGENCY: Federal Energy Regulatory Commission (Commission).

ACTION: Order adopting revised ''Business Practice Standards for OASIS Transactions'' (BPS Document).

SUMMARY: The Commission is revising the BPS Document adopted by the

Commission on February 25, 2000 in *Open Access Same-Time Information System and Standards of Conduct,* Order No. 638, FERC Stats. & Regs. ¶ 31,093 (2000). The revisions reflect the Commission's consideration of the comment received in response to the August 1, 2000 order seeking comments in this proceeding. (92 FERC ¶ 61,147 (2000)).

EFFECTIVE DATE: This order is effective on December 1, 2000.

ADDRESSES: Office of the Secretary, Federal Energy Regulatory Commission, 888 First Street, N.E., Washington, D.C. 20426. E-Mail address: ''comment.rm@ferc.fed.us''.

FOR FURTHER INFORMATION CONTACT:

Marvin Rosenberg (Technical Information), Office of Markets, Tariffs, and Rates, Federal Energy Regulatory Commission, 888 First Street, N.E., Washington, D.C. 20426; (202) 208–1283.

Paul Robb (Technical Information), Office of Markets, Tariffs, and Rates, Federal Energy Regulatory Commission, 888 First Street, N.E., Washington, D.C. 20426; (202) 219–2702.

Sharon Dameron (Legal Information), Office of the General Counsel, Federal Energy Regulatory Commission, 888 First Street, N.E., Washington, D.C. 20426; (202) 208–2017.

SUPPLEMENTARY INFORMATION:

Order Adopting Revised ''Business Practice Standards for OASIS Transactions''

I. Introduction

In this order, the Commission adopts revisions to the ''Business Practice Standards for OASIS Transactions'' (BPS) adopted by the Commission on February 25, 2000 in *Open Access Same-Time Information System and Standards of Conduct,* Order No. 638, FERC Stats. & Regs. ¶ 31,093 (2000). The Commission is adopting these changes after consideration of the comments filed in response to the Commission's August 1, 2000 order seeking comments on proposed changes to the BPS.[1] Among other matters, the revisions concern the scheduling period for ''same-day'' and ''next-hour'' transactions and standards for Next Hour Market Service (NHM Service).

II. Background

In Order No. 638, the Commission adopted a set of uniform business practices (*i.e.,* the BPS), implementing the Commission's policies on transmission service price negotiations and on improving interactions between transmission providers and customers over Open Access Same-Time Information System (OASIS) sites. Order No. 638 also contained a number of requests to the Market Interface Committee and the OASIS How Working Group (collectively, MIC/How Groups),[2] including a request that the MIC/How Groups submit a report to the Commission, by June 29, 2000,[3] providing recommendations for revisions to the BPS to reflect the Commission's findings in a December 16, 1999 order[4] regarding NHM Service[5] and to consider other changes.[6]

On June 16, 2000, the MIC/How Groups jointly submitted for Commission consideration recommendations to revise the BPS. The MIC/How Groups proposed a number of revisions, including revised definitions of the scheduling period for same-day and next-hour transactions in BPS Section 2.6.1, and a new section 7 with 16 new business practices covering NHM Service.[7] These business practices defined NHM Service and listed it as a voluntary service that, if provided, must be provided in accordance with Standards 7.1–7.16. Among other matters, these standards set the time limits for such transactions, require NERC electronic tags (ETAGS) for reserving and designating such service, and discuss procedures for reserving such service, identifying path segments, and curtailing such service.

Our August 1, 2000 order invited comments on whether the Commission should adopt the recommended revisions to the BPS suggested by the MIC/How Group, as modified by the Commission.[8] Williams Energy Marketing and Trading Company (WEM&T) filed the sole comment in response to our August 1, 2000 order. In this order, we adopt the revisions contemplated in our August 1, 2000 order, and correct an error concerning the definition of ''same-day'' in Standard 2.6.1.

III. Discussion

WEM&T comments on three issues. First, WEM&T comments that the August 1, 2000 order appears to inadvertently retain the original definition of ''same-day,'' although the Commission was proposing to adopt a revised definition. Specifically, WEM&T notes that the definition in the Attachment to the August 1, 2000 order states:

Standard 2.6.1: Same-day is (i) after 2 p.m. of the preceding day and (ii) more than one hour prior to the service start time.

WEM&T states that, consistent with the discussion in the August 1, 2000 order, Standard 2.6.1 should read as follows:

Standard 2.6.1: Same-day is after 2 p.m. of the preceding day.

The Commission agrees that the definition in the Attachment to the August 1, 2000 order does not match the intent of that order. This was an inadvertent error. Accordingly, we revise Standard 2.6.1, as described above.

Next, WEM&T requests that the Commission include a definition of NHM Service in the BPS. WEM&T contends that allowing individual transmission providers to devise their own definitions of NHM Service is not conducive to the creation of seamless interactions between regional transmission organizations.

We deny WEM&T's request. It is predicated on the assumption that individual transmission providers are free to devise their own definitions of NHM Service. This assumption is not accurate. On July 7, 2000, the Commission clarified that ''transmission providers wishing to adopt the NHM Service must do so by filing a tariff sheet that states the utility is adopting NERC's NHM Service, as accepted by the Commission in the December 16 order.''[9] Thus, individual transmission providers are not free to devise their own definitions of NHM Service, but rather, must file tariff sheets adopting NERC's NHM Service, which includes a

[1] Open Access Same-Time Information System and Standards of Conduct, 92 FERC ¶ 61,147 (2000).

[2] *See* Order No. 638, FERC Stats. & Regs. ¶ 31,093 at 31,448–49.

[3] Ninety days from March 31, 2000, the date of publication of Order No. 638 in the **Federal Register**.

[4] North American Electric Reliability Council, 89 FERC ¶ 61,277 (1999), *reconsideration denied,* 92 FERC ¶ 61,012 (2000).

[5] NHM Service would allow customers to reserve transmission service for a duration of one hour when the request is made no more than 60 minutes prior to the commencement of service. *See* Section 7 of the BPS.

[6] *See* section 4.2.10.2 of the OASIS Standards and Communication Protocols Document (S&CP Document).

[7] Other revisions to the BPS include: (1) Designation in Table 1–1 of NHM Service as a standard product; (2) revisions to Tables 4–2 and 4–3 and related provisions to reflect the availability of NHM Service and its priority vis-a-vis other transmission services; (3) revisions to Standards 4.8, 4.17, 5.4, and addition of a new Standard 4.2.7, to reflect recommended clarifications of applicable comment fields; (4) revisions to Standards 3.3, 3.6, 4.1, 4.13, 4.15, 4.20, 4.24, 4.25, and 5.5 (by changing the word ''should'' to ''shall'' to reflect that these standards were made mandatory in Order No. 638.

[8] Open Access Same-Time Information System and Standards of Conduct, 92 FERC ¶ 61,147 (2000).

[9] North American Reliability Council, 92 FERC ¶ 61,012 at 61,025. [Footnote omitted.]

detailed and specific definition of NHM Service. Further, the July 7, 2000 order also provided that if the Commission approves any revisions by NERC to the NHM Service, transmission providers must file tariff sheets with the Commission that reflect the changes.

Finally, WEM&T urges the Commission to require transmission providers to offer NHM Service. WEM&T states that mandatory NHM Service will enhance the development of more liquid and competitive electric markets.

The Commission denies this request as beyond the scope of this proceeding which involves business practices, not modifications to the terms of the Commission's pro forma tariff.

The Commission orders

(A) The revisions to the ''Business Practice Standards for OASIS Transactions'' contemplated by the August 1, 2000 order in Docket No. RM95–9–013 are adopted, with the exception of the change in Ordering Paragraph (B) below.

(B) Standard 2.6.1 is revised to read as follows:

Standard 2.6.1: Same-day is after 2 p.m. of the preceding day.

By the Commission.

David P. Boergers,

Secretary.

Attachment A—Federal Energy Regulatory Commission—Business Practice Standards for Open Access Same-Time Information System (OASIS) Transactions

Version 1.2 (October 25, 2000)

Table of Contents

Section

Table of Contents

Section 1 Introduction
1.1 Business Practice Standards
Section 2 Standard Terminology for Transmission and Ancillary Services
2.1 Attribute Values Defining the Period of Service
2.2 Attribute Values Defining Service Class
2.3 Attribute Values Defining Service Types
2.4 Curtailment Priorities
2.5 Other Service Attribute Values
Section 3 OASIS Registration Procedures
3.1 Entity Registration
3.2 Process to Register Non-Standard Service Attribute Values
3.3 Registration of Points of Receipt and Delivery
Section 4 On-Line Negotiation and Confirmation Process
4.1 On-Line Price Negotiation in Short-Term Markets
4.2 Phase IA Negotiation Process State Transition Diagram
4.3 Negotiations Without Competing Bids
4.4 Negotiations With Competing Bids for Constrained Resources
Section 5 Procurement of Ancillary and Other Services
5.1 Introduction
5.2 Transmission Provider Requirements
5.3 Transmission Customer Requirements
Section 6 Pathnaming Standards
6.1 Introduction
6.2 Transmission Provider Requirements
Section 7 Next Hour Market Service
7.1 Introduction
7.2 Transmission Provider Requirements

Section 1 Introduction

This document contains business practice standards designed to implement the Commission's policy related to on-line price negotiation and to improve the commercial operation of the Open Access Same-Time Information System (OASIS).

Section 1.1 Business Practice Standards

This document adopts OASIS business practice standards as mandatory requirements.

Section 2 Standard Terminology for Transmission and Ancillary Services

Section 2.1 Attribute Values Defining the Period of Service

The data templates of the Phase IA Standards & Communication Protocols (S&CP) Document have been developed with the use of standard service attributes in mind. What the Phase IA S&CP Document does not offer are specific definitions for each attribute value. This section offers standards for these service attribute definitions to be used in conjunction with the Phase IA data templates.

Fixed services are associated with transmission services whose periods align with calendar periods such as a day, week, or month. Sliding services are fixed in duration, such as a week or month, but the start and stop time may slide. For example a Sliding week could start on Tuesday and end on the following Monday. Extended allows for services in which the start time may slide and also the duration may be longer than a standard length. For example an Extended week of service could be nine consecutive days. Various transmission service offerings using these terms are defined in Standards 2.1.1 through 2.1.14 below. Next__Increment indicates the next available full Service__Increment, such as the next hour, next day, or next week. Next__Increment is added at this time to address Next Hour Market Service, but may be used in the future to denote other products.

Table 1–1 identifies the standard terminology in OASIS Phase IA for the attributes SERVICE_INCREMENT (Hourly, Daily, Weekly, Monthly, and Yearly) and TS_WINDOW (Fixed, Sliding, Extended, and Next_Increment). Values shown in Table 1–1 as N/A (Not Applicable) are not sufficiently common in the market to require standards.

Next Hour Market Service, a new pro forma service, is denoted as having a Service Increment of Hourly and a TS__WINDOW of Next__Increment.

TABLE 1–1.—STANDARD SERVICE PERIOD ATTRIBUTE VALUES IN PHASE IA

	Fixed	Sliding	Extended [1]	Next_Increment
Hourly	X	N/A	N/A	X[2]
Daily	X	X	X	N/A
Weekly	X	X	X	N/A
Monthly	X	X	X	N/A
Yearly	X	X	X	N/A

[1] Included in the Phase IA S&CP Data Dictionary, Version 1.3, issued September 29, 1998.
[2] Next Hour Market Service is identified by Service Increment = Hourly and TS_WINDOW = Next_Increment.

The existence of an attribute value in this table does not imply the services must be offered by a Transmission Provider. Requirements as to which services must be offered are defined by regulation and tariffs. Likewise, absence of a service period value in Table 1–1 does not restrict a Transmission Provider from offering a service. The intent of the table is to establish common terminology associated with standard products.

Each service period value assumes a single time zone specified by the Transmission Provider. It is recognized that daylight time switches must be accommodated in practice, but they have been omitted here for the purpose of simplicity.

Standard 2.1: A Transmission Provider shall use the values and definitions below for the service period attributes, Service_Increment and TS_Window for all transmission services offered on OASIS, or shall post alternative service period values and associated definitions on the OASIS Home Page at http://www.tsin.com, or shall use existing attribute values and definitions posted by other Transmission Providers. (*See* Section 3 for registration requirements.)

Standard 2.1.1: Fixed Hourly—The service starts at the beginning of a clock hour and stops at the end of a clock hour.

Standard 2.1.2: Fixed Daily—The service starts at 00:00 and stops at 24:00 of the

same calendar date (same as 00:00 of the next consecutive calendar date).

Standard 2.1.3: Fixed Weekly—The service starts at 00:00 on Monday and stops at 24:00 of the following Sunday (same as 00:00 of the following Monday).

Standard 2.1.4: Fixed Monthly—The service starts at 00:00 on the first date of a calendar month and stops at 24:00 on the last date of the same calendar month (same as 00:00 of the first date of the next consecutive month).

Standard 2.1.5: Fixed Yearly—The service starts at 00:00 on the first date of a calendar year and ends at 24:00 on the last date of the same calendar year (same as 00:00 of the first date of the next consecutive year).

Standard 2.1.6: Sliding Daily—The service starts at the beginning of any hour of the day and stops exactly 24 hours later at the same time on the next day.

Standard 2.1.7: Sliding Weekly—The service starts at 00:00 of any date and stops exactly 168 hours later at 00:00 on the same day of the next week.

Standard 2.1.8: Sliding Monthly—The service starts at 00:00 of any date and stops at 00:00 on the same date of the next month (28–31 days later). If there is no corresponding date in the following month, the service stops at 24:00 on the last day of the next month.

For example: Sliding Monthly starting at 00:00 on January 30 would stop at 24:00 on February 28 (same as 00:00 March 1).

Standard 2.1.9: Sliding Yearly—The service starts at 00:00 of any date and stops at 00:00 on the same date of the following year. If there is no corresponding date in the following year, the service stops at 24:00 on the last day of the same month in the following year.

For example Sliding Yearly service starting on February 29 would stop on February 28 of the following year.

Standard 2.1.10: Extended Daily—The service starts at any hour of a day and stops more than 24 hours later and less than 168 hours later.

Standard 2.1.11: Extended Weekly—The service starts at 00:00 of any date and stops at 00:00 more than one week later, but less than four weeks later.

Standard 2.1.12: Extended Monthly—The service starts at 00:00 of any date and stops at 00:00 more than one month later, but less than twelve months later.

Standard 2.1.13: Extended Yearly—The service starts at 00:00 of any date and stops at 00:00 more than one year later, but must be requested in increments of full years.

Standard 2.1.14: NEXT_INCREMENT HOURLY—The service starts at the beginning of the next clock hour and stops at the end of that clock hour.

Section 2.2 Attribute Values Defining Service Class

Standard 2.2: A Transmission Provider shall use the values and definitions below to describe the service class, TS_CLASS, for transmission services offered on OASIS, or shall post alternative TS_CLASS attribute values and associated definitions on the OASIS Home Page at http://www.tsin.com, or shall use the attribute values and definitions posted by other Transmission Providers. (*See* Section 3 for registration requirements.)

Standard 2.2.1: Firm—Transmission service that always has priority over NONFIRM transmission service and includes Native Load Customers, Network Customers, and any transmission service not classified as non-firm in accordance with the definitions in the pro forma tariff.

Standard 2.2.2: Non-Firm—Transmission service that is reserved and/or scheduled on an as-available basis and is subject to curtailment or interruption at a lesser priority compared to Firm transmission service, including Native Load Customers and Network Customers, in accordance with the definitions in the *pro forma* tariff.

Section 2.3 Attribute Values Defining Service Types

Standard 2.3: A Transmission Provider shall use the values and definitions below to describe the service type, TS_TYPE, for transmission services offered on OASIS, or shall post alternative attribute values and associated definitions on the OASIS Home Page at http://www.tsin.com, or shall use the attribute values and definitions posted by other Transmission Providers. (*See* Section 3 for registration requirements.)

Standard 2.3.1: Point-to-point (PTP)—Transmission service that is reserved and/or scheduled between specified Points of Receipt and Delivery pursuant to Part II of the *pro forma* tariff and in accordance with the definitions in the pro forma tariff.

Standard 2.3.2: Network—Network Integration Transmission Service that is provided to serve a Network Customer load pursuant to Part III of the *pro forma* tariff and in accordance with the definitions in the *pro forma* tariff.

Section 2.4 Curtailment Priorities

Standard 2.4: A Transmission Provider that has adopted NERC TLR Procedures shall use the curtailment priority definitions contained in NERC TLR Procedures for NERC CURTAILMENT PRIORITY (1–7) for all transmission services offered on OASIS. A Transmission Provider that has adopted alternative curtailment procedures shall post its alternative attribute values and associated definitions on the OASIS Home Page at http://www.tsin.com, or shall use attribute values and definitions posted by another Transmission Provider. (*See* Section 3 for registration requirements.)

Section 2.5 Other Service Attribute Values

The Commission has defined six ancillary services in Order No. 888. Other services may be offered pursuant to filed tariffs.

Standard 2.5: A Transmission Provider shall use the definitions below to describe the AS_TYPEs offered on OASIS, or shall post alternative attribute values and associated definitions on the OASIS Home Page at http://www.tsin.com, or shall use attribute values and definitions posted by another Transmission Provider. (*See* Section 3 for registration requirements.)

FERC Ancillary Services Definitions

Standard 2.5.1: Scheduling, System Control and Dispatch Service (SC)—is necessary to the provision of basic transmission service within every control area. This service can be provided only by the operator of the control area in which the transmission facilities used are located. This is because the service is to schedule the movement of power through, out of, within, or into the control area. This service also includes the dispatch of generating resources to maintain generation/load balance and maintain security during the transaction and in accordance with section 3.1 (and Schedule 1) of the *pro forma* tariff.

Standard 2.5.2: Reactive Supply and Voltage Control from Generation Sources Service (RV)—is the provision of reactive power and voltage control by generating facilities under the control of the control area operator. This service is necessary to the provision of basic transmission service within every control area and in accordance with section 3.2 (and Schedule 2) of the *pro forma* tariff.

Standard 2.5.3: Regulation and Frequency Response Service (RF)—is provided for transmission within or into the transmission provider's control area to serve load in the area. Customers may be able to satisfy the regulation service obligation by providing generation with automatic generation control capabilities to the control area in which the load resides and in accordance with section 3.3 (and Schedule 3) of the *pro forma* tariff.

Standard 2.5.4: Energy Imbalance Service (I)—is the service for transmission within and into the transmission provider's control area to serve load in the area. Energy imbalance represents the deviation between the scheduled and actual delivery of energy to a load in the local control area over a single hour and in accordance with section 3.4 (and Schedule 4) of the *pro forma* tariff.

Standard 2.5.5: Operating Reserve—Spinning Reserve Service (SP)—is provided by generating units that are on-line and loaded at less than maximum output. They are available to serve load immediately in an unexpected contingency, such as an unplanned outage of a generating unit and in accordance with section 3.5 (and Schedule 5) of the *pro forma* tariff.

Standard 2.5.6: Operating Reserve—Supplemental Reserve Service (SU)—is generating capacity that can be used to respond to contingency situations. Supplemental reserve, is not available instantaneously, but rather within a short period (usually ten minutes). It is provided by generating units that are on-line but unloaded, by quick-start generation, and by customer interrupted

load and in accordance with section 3.6 (and Schedule 6) of the *pro forma* tariff.

Other Service Definitions

Other services may be offered to Transmission Customers through Commission-approved revisions to their individual open access tariffs. Examples of other services that may be offered include the Interconnected Operations Services described below in Standards 2.5.7, 2.5.8, and 2.5.9. Ancillary service definitions may be offered pursuant to an individual transmission provider's specific tariff filings.

Standard 2.5.7: Dynamic Transfer (DT)—is the provision of the real-time monitoring, telemetering, computer software, hardware, communications, engineering, and administration required to electronically move all or a portion of the real energy services associated with a generator or load out of its Host Control Area into a different Electronic Control Area.

Standard 2.5.8: Real Power Transmission Losses (TL)—is the provision of capacity and energy to replace energy losses associated with transmission service on the Transmission Provider's system.

Standard 2.5.9: System Black Start Capability (BS)—is the provision of generating equipment that, following a system blackout, is able to start without an outside electrical supply. Furthermore, Black Start Capability is capable of being synchronized to the transmission system such that it can provide a startup supply source for other system capacity that can then be likewise synchronized to the transmission system to supply load as part of a process of re-energizing the transmission system.

Standard 2.6: A Transmission Provider shall use the definitions below to describe the scheduling period leading up to the start time of a transaction:

Standard 2.6.1: Same-day is after 2 p.m. of the preceding day; and

Standard 2.6.2: Next-hour is one hour or less prior to the service start time.

Section 3 OASIS Registration Procedures

Section 3.1 Entity Registration

Operation of OASIS requires unambiguous identification of parties.

Standard 3.1: All entities or persons using OASIS shall register the identity of their organization (including DUNS number) or person at the OASIS Home Page at http://www.tsin.com. Registration identification shall include the parent entity (if any) of the registrant. Registration shall be a prerequisite to OASIS usage and renewed annually and whenever changes in identification occur and thereafter. An entity or person not complying with this requirement may be denied access by a transmission provider to that transmission provider's OASIS node.

The registration requirement applies to any entity logging onto OASIS for the purpose of using or updating information, including Transmission Providers, Transmission Customers, Observers, Control Areas, Security Coordinators, and Independent System Operators.

Section 3.2 Process To Register Non-Standard Service Attribute Values

Section 2 of the OASIS business practice standards addresses the use of standard terminology in defining services on OASIS. These standard definitions for service attribute values will be posted publicly on the OASIS Home Page at http://www.tsin.com and may be used by all Transmission Providers to offer transmission and ancillary services on OASIS. If the Transmission Provider determines that the standard definitions are not applicable, the Transmission Provider may register new attribute values and definitions on the OASIS Home Page. Any Transmission Provider may use the attribute values and definitions posted by another Transmission Provider.

Standard 3.2: Providers of transmission and ancillary services shall use only attribute values and definitions that have been registered on the OASIS Home Page at http://www.tsin.com for all transmission and ancillary services offered on their OASIS.

Standard 3.3: Providers of transmission and ancillary services shall endeavor to use on their OASIS nodes attribute values and definitions that have been posted by other Transmission Providers on the OASIS Home Page at http://www.tsin.com whenever possible.

Section 3.3 Registration of Points of Receipt and Delivery

In order to improve coordination of path naming and to enhance the identification of commercially available connection points between Transmission Providers and regions, the business practice for Phase IA OASIS requires that:

I. Transmission Providers register at the OASIS Home Page at http://www.tsin.com, all service points (Points of Receipt and Delivery) for which transmission service is available over the OASIS.

II. Each Transmission Provider would then indicate on its OASIS node, for each Path posted on its OASIS node, the Points of Receipt and Delivery to which each Path is connected.

A Transmission Provider is not required to register specific generating stations as Points of Receipt, unless they were available as service points for the purposes of reserving transmission service on OASIS. The requirement also does not include registration of regional flowgates, unless they are service points for the purposes of reserving transmission on OASIS.

Standard 3.4: A Transmission Provider shall register and thereafter maintain on the OASIS Home Page at http://www.tsin.com all Points of Receipt and Delivery to and from which a Transmission Customer may reserve and schedule transmission service.

Standard 3.5: For each reservable Path posted on their OASIS nodes, Transmission Providers shall indicate the available Point(s) of Receipt and Delivery for that Path. These Points of Receipt and Delivery shall be from the list registered on the OASIS Home Page at http://www.tsin.com.

Standard 3.6: When two or more Transmission Providers share common Points of Receipt or Delivery, or when a Path connects Points of Receipt and Delivery in neighboring systems, the Transmission Providers owning and/or operating those facilities shall apply consistent names for those connecting paths or common paths on the OASIS.

Section 4 On-Line Negotiation and Confirmation Process

Section 4.1 On-Line Price Negotiation in Short-Term Markets

Standard 4.1: Consistent with FERC policy and regulations, all reservations and price negotiations shall be conducted on OASIS.

Standard 4.2: Reserved.

Standard 4.3: Reserved.

Section 4.2 Phase IA Negotiation Process State Transition Diagram

The Phase IA S&CP Document provides a process state diagram to define the Customer and Transmission Provider interactions for negotiating transmission service. This diagram defines allowable steps in the reservation request, negotiation, approval and confirmation.

Standard 4.4: The state diagram appearing in Exhibit 4–1 in Section 4.2.10.2 of the Version 1.3 of the S&CP Document constitutes a recommended business practice in OASIS Phase IA.

Standard 4.5: The definitions in Section 4.2.10.2 of the Version 1.3 of the S&CP Document (status values) shall be applied to the process states in OASIS Phase IA. Table 4–1—Reserved.

Section 4.3 Negotiations Without Competing Bids

The following practices are defined in order to enhance consistency of the reservation process across OASIS Phase IA nodes.

Standard 4.6: A Transmission Provider/Seller shall respond to a Customer's service request, consistent with filed tariffs, within the Provider Response Time Limit defined in Table 4–2 Reservation Timing Requirements. The time limit is measured from the time the request is QUEUED. A Transmission Provider may respond by setting the state of the reservation request to one of the following:

I. INVALID
II. DECLINED
III. REFUSED
IV. COUNTEROFFER
V. ACCEPTED
VI. STUDY (when the tariff allows), leading to REFUSED, COUNTEROFFER, or ACCEPTED.

Standard 4.7: Prior to setting a request to ACCEPTED, COUNTEROFFER, or REFUSED a Transmission Provider shall evaluate the appropriate resources and ascertain that the requested transfer capability is (or is not) available.

Standard 4.8: For any request that is REFUSED or INVALID, the Transmission Provider must indicate in the SELLER_COMMENTS field the reason the request was refused or invalid.

Standard 4.9: The Customer may change a request from QUEUED, RECEIVED, STUDY, COUNTEROFFER, REBID, or ACCEPTED to WITHDRAWN at any time prior to CONFIRMED.

Standard 4.10: From ACCEPTED or COUNTEROFFER, a Customer may change the status to CONFIRMED or WITHDRAWN. In addition, a Customer may change the status from COUNTEROFFER to REBID. The Customer has the amount of time designated as Customer Confirmation Time Limit in Table 4–2 Reservation Timing Requirements to change the state of the request to CONFIRMED. The Customer time limit is measured from the first time the request is moved to ACCEPTED or COUNTEROFFER, and is not reset with subsequent iterations of negotiation.

Standard 4.11: After expiration of the Customer Confirmation Time Limit, specified in Table 4–2 Reservation Timing Requirements, the Transmission Provider has a right to move the request to the RETRACTED state.

Standard 4.12: Should the Customer elect to respond to a Transmission Provider's COUNTEROFFER by moving a reservation request to REBID, the Transmission Provider shall respond by taking the request to a DECLINED, ACCEPTED, or COUNTEROFFER state within the Provider Counter Time Limit, specified in Table 42 Reservation Timing Requirements. The Transmission Provider response time is measured from the most recent REBID time.

Standard 4.13: The following timing requirements shall apply to all reservation requests:

TABLE 4–2.—RESERVATION TIMING REQUIREMENTS

Class	Service increment	Time QUEUED prior to start	Provider evaluation time limit [1]	Customer confirmation time limit [2] after ACCEPTED or COUNTEROFFER [3]	Provider counter time limit after REBID [4]
Non-firm	Hourly	<1 hour	Best effort	5 minutes	5 minutes.
Non-firm	Hourly	>1 hour	30 minutes	5 minutes	5 minutes.
Non-firm	Hourly	Day ahead	30 minutes	30 minutes	10 minutes.
Non-firm	Daily	N/A	30 minutes	2 hours	10 minutes.
Non-firm	Weekly	N/A	4 hours	24 hours	4 hours.
Non-firm	Monthly	N/A	2 days [5]	24 hours	4 hours.
Firm	Daily	<24 hours	Best effort	2 hours	30 minutes.
Firm	Daily	N/A	30 days [6]	24 hours	4 hours.
Firm	Weekly	N/A	30 days [6]	48 hours	4 hours.
Firm	Monthly	N/A	30 days [6]	4 days	4 hours.
Firm	Yearly	60 days [7]	30 days	15 days	4 hours.

[1] Consistent with regulations and filed tariffs, measurement starts at the time the request is QUEUED.
[2] Confirmation time limits are not to be interpreted to extend scheduling deadlines or to override preexemption deadlines.
[3] Measurement starts at the time the request is first moved to either ACCEPTED or COUNTEROFFER. The time limit does not reset on subsequent changes of state.
[4] Measurement starts at the time the Transmission Customer changes the state to REBID. The measurement resets each time the request is changed to REBID.
[5] Days are defined as calendar days.
[6] Subject to expedited time requirements of Section 17.1 of the *pro forma* tariff. Transmission Providers shall make best efforts to respond within 72 hours, or prior to the scheduling deadline, whichever is earlier, to a request for Daily Firm Service received during period 2–30 days ahead of the service start time.
[7] Subject to Section 17.1 of the *pro forma* tariff, whenever feasible and on a nondiscriminatory basis, transmission providers should accommodate requests made with less than 60 days notice.

Section 4.4 Negotiations With Competing Bids for Constrained Resources

Competing bids exist when multiple requests cannot be accommodated due to a lack of available transmission capacity. One general rule is that OASIS requests should be evaluated and granted priority on a first-come-first-served basis established by OASIS QUEUED time. Thus, the first to request service should get it, all else being equal.

Exceptions to this first-come-first-served basis occur when there are competing requests for limited resources and the requests have different priorities established by FERC regulations and filed tariffs. Prior to the introduction of price negotiations, the attribute values that have served as a basis for determining priority include:

I. Type (Network, Point-to-point)
II. Class (Firm, Non-Firm)
III. Increment (Hourly, Daily, Weekly, Monthly, Yearly)
IV. Duration (the amount of time between the Start Date and the Stop Date)
V. Amount (the MW amount)

Under a negotiation model, price can also be used as an attribute for determining priority. The negotiation process increases the possibility that a Transmission Provider will be evaluating multiple requests that cannot all be accommodated due to limited resources. In this scenario, it is possible that an unconfirmed request with an earlier QUEUED time could be preempted (SUPERSEDED). For this to occur, the subsequent request would be of higher priority or of greater price.

Standard 4.14: Consistent with regulations and filed tariffs, the following are recommended relative priorities of Service Request Tiers.[10] Specific exceptions may exist in accordance with filed tariffs. The priorities refer only to negotiation of service and do not refer to curtailment priority.

4.14.1. Service Request Tier 1: Native load, Network, or Long-term Firm
4.14.2. Service Request Tier 2: Short-term Firm
4.14.3. Service Request Tier 3: Network Service From Non-designated Resources
4.14.4. Service Request Tier 4: Non-firm
4.14.5. Service Request Tier 5: Non-firm Point-to-point Service over secondary receipt and delivery points
4.14.6 Service Request Tier 6: Non-firm Next Hour Market Service

Standard 4.15: Consistent with regulations and filed tariffs, reservation requests shall be handled in a first-come-first-served order based on QUEUE_TIME.

Standard 4.16: Consistent with regulations and filed tariffs, Table 4–3 describes the relative priorities of competing service requests and rules for offering right-of-first-refusal. While the table indicates the relative priorities of two competing requests, it also is intended to be applied in the more general case of more than two competing requests.

TABLE 4–3.—PRIORITIES FOR COMPETING RESERVATION REQUESTS

Row	Request 1	Is preempted by Request 2	Right of first refusal
1	Tier 1: Long-term Firm, Native Load, and Network Firm.	N/A—Not preempted by a subsequent request.	N/A.
2	Tier 2: Short-term Firm	Tier 1: Long-term Firm, Native Load, and Network Firm, while Request 1 is conditional. Once Request 1 is unconditional, it may not be preempted..	No.
3	Tier 2: Short-term Firm	Tier 2: Short-term Firm of longer term (duration), while Request 1 conditional. Once Request 1 is unconditional, it may not be preempted [1].	Yes, while Request 1 is conditional. Once Request 1 is unconditional, it may not be preempted and right of first refusal is not applicable.
4	Tier 3: Network Service From Non-Designated Resources.	Tiers 1 and 2: All Firm (including Network).	No.
5	Tier 4: All Non-Firm PTP	Tiers 1 and 2: All Firm (including Network)	No.
6	Tier 4: All Non-Firm PTP	Tier 3: Network Service from Non-Designated Resources.	No.
7	Tier 4: All Non-Firm PTP	Tier 4: Non-firm PTP of a longer term (duration). [1] Except in the last hour prior to start (See Standard 4.23).	Yes.[2]
8	Tier 4: All Non-Firm PTP	Tier 4: Non-firm PTP of equal term (duration) [1] and higher price, when Request 1 is still unconfirmed and Request 2 is received pre-confirmed. A confirmed non-firm PTP may not be preempted for another non-firm request of equal duration. (See Standards 4.22 and 4.25.).	Yes. [3]
9	Tier 5: Non-firm PTP Service over secondary receipt and delivery points.	Tier 5 can be preempted by Tiers 1 through 4.	No.
10	Tier 6: Non-firm Next Hour Market Service	Tier 6 can be preempted by Tiers 1 through 5.	No.

Note: The term Tier is introduced to avoid confusion with existing terms such as TS_CLASS.

[1] Longer duration, in addition to being higher SERVICE_INCREMENT (*i.e.,* WEEKLY has priority over DAILY), also may mean more multiples of the same SERVICE_INCREMENT (*i.e.,* 3 days may have priority over 2 days). Multiple service increments must be at the same level of capacity.

[2] Right of first refusal when a subsequent request is received of a longer duration applies only if the first request is confirmed.

[3] Right of first refusal when a subsequent request is received of an equal duration and higher price applies only when the first request is unconfirmed and the subsequent request is received preconfirmed (see Standards 4.22 and 4.26).

Standard 4.17: For a request or reservation that is Superseded or Displaced, the Transmission Provider must indicate the Assignment Reference Number of the competing request and the reason for denial of service in the SELLER_COMMENTS field.

Standard 4.18: Given competing requests for a limited resource and a right-of-first-refusal is not required to be offered, the Transmission Provider may immediately move requests in the CONFIRMED state to DISPLACED, or from an ACCEPTED or COUNTEROFFER state to SUPERSEDED, if the competing request is of higher priority, based on the rules represented in Table 4–3. These state changes require dynamic notification to the Customer if the Customer has requested dynamic notification on OASIS.

Standard 4.19: In those cases where right-of-first-refusal is required to be offered, the Transmission Provider shall notify the Customer, through the use of a COUNTEROFFER, of the opportunity to match the subsequent offer.

Standard 4.20: A Customer who has been extended a right-of-first-refusal shall have a confirmation time limit equal to the lesser of (a) the Customer Confirmation Time Limit in Table 4–2 or (b) 24 hours.

Standard 4.21: A Transmission Provider shall apply all rights-of-first-refusal in a nondiscriminatory and open manner for all Customers.

Standard 4.22: Once a non-firm PTP request has been confirmed, it shall not be displaced by a subsequent non-firm PTP request of equal duration and higher price.

Standard 4.23: A confirmed, non-firm PTP reservation for the next hour shall not be displaced within one hour of the start of the reservation by a subsequent non-firm PTP reservation request of longer duration.

Standard 4.24: A Transmission Provider shall accept any reservation request submitted for an unconstrained Path if the Customer's bid price is equal to or greater than the Transmission Provider's posted offer price at the time the request was queued, even if later requests are submitted at a higher price. This standard applies even when the first request is still unconfirmed, unless the Customer Confirmation Time Limit has expired for the first request.

Standard 4.25: Once an offer to provide non-firm PTP transmission service at a given price is extended to a Customer by the Transmission Provider, and while this first request is still unconfirmed but within the Customer Confirmation Time Limit, the Transmission Provider shall not preempt or otherwise alter the status of that first request on receipt of a subsequent request of the same Tier and equal duration at a higher price, unless the subsequent request is submitted as pre-confirmed.

Standard 4.26: If during a negotiation of service (*i.e.,* prior to Customer confirmation) a subsequent pre-confirmed request for service over the same limited resource of equal duration but higher price is received, the Transmission Provider *must* COUNTEROFFER the price of service on the prior COUNTEROFFER or ACCEPTED price to match the competing offer, in order to give the first Customer an opportunity to match the offer. This practice must be implemented in a non-discriminatory manner.

Standard 4.27: Whenever a request or reservation is set to the state of Invalid, Refused, Declined, Superseded, Retracted, Annulled, or Displaced, the Transmission Provider or Seller shall enter the reason for the action in the SELLER_COMMENTS field.

Section 5 Procurement of Ancillary and Other Services

Section 5.1 Introduction

Phase IA OASIS data templates allow the coupling of ancillary service arrangements with the purchase of transmission service for the purpose of simplifying the overall process for Customers. Transmission

Providers must indicate (consistent with filed tariffs), which services are MANDATORY (must be taken from the Primary Transmission Provider), REQUIRED (must be provided for but may be procured from alternative sources), or OPTIONAL (not required as a condition of transmission service).

The Transmission Customer should make known to the Transmission Provider at the time of the reservation request certain options related to arrangement of ancillary services. The Transmission Customer may indicate:

a. I will take all the MANDATORY and REQUIRED ancillary services from the Primary Transmission Provider
b. I will take REQUIRED ancillary services from Third Party Seller X
c. I would like to purchase OPTIONAL services
d. I will self provide ancillary services
e. I will arrange for ancillary services in the future (prior to scheduling)

While these interactions are available in the Phase IA S&CP Document, there is a need to clarify the associated business practices. The standards in Section 5 apply to services defined in filed tariffs.

Section 5.2 Transmission Provider Requirements

Standard 5.1: The Transmission Provider shall designate which ancillary services are MANDATORY, REQUIRED, or OPTIONAL for each offered transmission service or each transmission path to the extent these requirements can be determined in advance of the submittal of a reservation request on a specific Path by a Transmission Customer.

Standard 5.2: A Transmission Provider shall modify a Transmission Customer's service request to indicate the Transmission Provider as the SELLER of any ancillary service, which is MANDATORY, to be taken from the Transmission Provider.

Standard 5.3: For REQUIRED and OPTIONAL services, the Transmission Provider shall *not* select a SELLER of ancillary service without the Transmission Customer first selecting that SELLER.

Standard 5.4: A Transmission Provider may accept a Transmission Customer's request for an ancillary service, which is not MANDATORY or REQUIRED, but shall indicate to the Transmission Customer at the time of acceptance in SELLER__COMMENTS that the service is not MANDATORY or REQUIRED.

Section 5.3 Transmission Customer Requirements

Standard 5.5: The Transmission Customer shall indicate with the submittal of a transmission reservation request, the preferred options for provision of ancillary services, such as the desire to use an alternative resource. The Transmission Provider shall post itself as the default ancillary service provider, if a Transmission Customer fails to indicate a third party SELLER of ancillary services. However, the Transmission Customer may change this designation at a later date, so long as this change is made prior to the Transmission Provider's scheduling deadline.

Standard 5.6: A Transmission Customer may, but is not required to, indicate a third party SELLER of ancillary services, if these services are arranged by the Transmission Customer off the OASIS and if such arrangements are permitted by the Transmission Provider's tariff. The Transmission Provider shall post itself as the default ancillary service provider, if a Transmission Customer fails to indicate a third party SELLER of ancillary services. However, the Transmission Customer may change this designation at a later date, so long as this change is made prior to the Transmission Provider's scheduling deadline.

Section 6 Pathnaming Standards

Section 6.1 Introduction

The Data Element Dictionary of the OASIS S&CP Document, Version 1.3, defines a path name in terms of a 50-character alphanumeric string:

RR/TPTP/PATHPATHPATH/OPTIONALFROM-OPTIONALTOTO/SPR RegionCode/TransmissionProviderCode/PathName/OptionalFrom-To(POR-POD)/Spare

This definition leaves it to the Transmission Providers to name the paths from their own perspective. The following standards provide an unambiguous convention for naming paths and will produce more consistent path names.

Section 6.2 Transmission Provider Requirements

Standard 6.1: A transmission provider shall use the path naming convention defined in the S&CP Data Dictionary for the naming of all reservable paths posted on OASIS.

Standard 6.2: A transmission provider shall use the third field in the path name to indicate the sending and receiving control areas. The control areas shall be designated using standard NERC codes for the control areas, separated by a hyphen. For example, the first three fields of the path name will be:

RR/TPTP/CAXX–CAYY/

Standard 6.3: A transmission provider shall use the fourth field of the path name to indicate POR and POD separated by a hyphen. For example, a path with a specific POR/POD would be shown as:

RR/TPTP/CAXX-CAYY/PORPORPORPOR-PODPODPODPOD/

If the POR and POD are designated as control areas, then the fourth field may be left blank (as per the example in 6.2).

Standard 6.4: A transmission provider may designate a sub-level for Points of Receipt and Delivery. For example, a customer reserves a path to POD AAAA. The ultimate load may be indeterminate at the time. Later, the customer schedules energy to flow to a particular load that may be designated by the transmission provider as a sub-level Point of Delivery. This option is necessary to ensure certain transmission providers are not precluded from using more specific service points by the inclusion of the POR/POD in the path name. All sub-level PORs and PODs must be registered as such on *http://www.tsin.com.*

Section 7 Next Hour Market Service

Section 7.1 Introduction

The standards in this section apply to the offering of Next Hour Market (NHM) Service only. The Commission has designated this service as voluntary for a transmission provider to offer. Therefore the standards apply to a transmission provider only if that provider offers NHM Service, in which case the standards become mandatory for that provider.

Section 7.2 Transmission Provider Requirements

Standard 7.1: Use of NHM Service shall be limited to interchange transactions having a duration of one clock-hour and requested no earlier than 60 minutes prior to the start time of the transaction.

Standard 7.2: A transmission provider offering NHM Service shall allow an eligible transmission customer to request a NHM Service reservation electronically using protocols compliant with the NERC ETAG Specification 1.6.

Standard 7.3: A transmission provider offering NHM Service shall allow a transmission customer to request NHM Service for one or more path segments of a tag by designating: (a) 0–NX as the transmission product code under the OASIS block and (b) BUYATMARKET as the OASIS reservation identifier.

Standard 7.4: A transmission provider offering NHM Service shall consider the submittal of a tag designating that provider on one or more path segments using NHM Service to include a pre-confirmed request for the necessary transmission reservation and associated mandatory ancillary services for each designated path segment, for the hour indicated. No additional confirmation steps shall be required by the transmission customer for a NHM Service transmission reservation and associated ancillary services.

Standard 7.5: A transmission provider offering NHM Service shall consider set the amount of the NHM Service reservation as:

a. The amount of the Transmission Provider Product, if specified.
b. In accordance with the Transmission Provider's tariff, the MW amount at the POR or POD for that Provider in the Loss Table, if Transmission Provider Product is not specified.
c. The MW amount in the Energy Profile, if neither Transmission Provider Product amount nor Provider Loss Table amounts are specified.

Standard 7.6: The OASIS queue time of a NHM Service request or reservation shall be the transmission provider ETAG approval service receipt time, unless a system failure requires the use of ETAG backup procedures, in which case the OASIS queue time shall be the time the

tag is received by the transmission provider.

Standard 7.7: The 0–NX designation in the tag assigns as transmission customer, for all NHM Service path segments in the transaction, the PSE that is designated as the Purchasing-Selling Entity (PSE) responsible for the tag. A PSE submitting a tag may not designate a NHM Service reservation for another PSE and a transmission provider may not assign a reservation to any transmission customer other than the PSE submitting the NHM Service tag.

Standard 7.8: When evaluating competing requests for transmission reservations, a transmission provider offering NHM Service shall consider the NHM Service to have a priority lower than Tier 5—point-to-point service over secondary receipt and delivery points.

Standard 7.9: Once a tag goes to IMPLEMENT or CONDITIONAL status in ETAG, the transmission provider shall consider the associated NHM Service reservations to be confirmed. Since the NHM Service confirmed reservation(s) are by definition less than one hour prior to start, these reservations shall not be displaced by a subsequent non-firm reservation of higher priority.

Standard 7.10: The transmission customer shall be obligated to pay for the transmission service under the terms of the tariff at the posted offer price for non-firm hourly service, once the interchange transaction tag is changed to the IMPLEMENT or CONDITIONAL status in ETAG. In the event of a voluntary withdrawal or reduction in the amount or duration of the service by the transmission customer after the tag has changed to IMPLEMENT or CONDITIONAL, the transmission customer shall remain obligated to pay for the full amount of the approved request. In the event of an involuntary curtailment or reduction of the service, initiated by the transmission provider or any other transmission provider, the transmission customer shall not be obligated to pay for any portions of the NHM Service that were involuntarily curtailed. In the case of involuntary curtailment or reduction, payment shall be based on a calculation of the MWhours actually used.

Standard 7.11: In the case that a transaction uses NHM Service for all required path segments in the tag, the default condition of the tag is NOT approved unless all required transmission providers and control areas indicate tag approval.

Standard 7.12: In the case that a transaction mixes one or more transaction path segments that use NHM Service with one or more path segments that use other types of transmission service, then: (1) As long as the NHM Service path segment(s) are not fully approved, then the tag shall default to NOT approved; and (2) if all NHM Service path segments in the ETAG are fully approved, then the tag shall revert to the normal default status as specified in NERC Operating Policy 3 and associated Appendices.

Standard 7.13: The transmission customer shall be required to submit a NHM Service transaction request prior to the tag submittal time limit as specified in NERC Operating Policy 3 and associated Appendices, and no earlier than 60 minutes prior to the start of the transaction.

Standard 7.14: The approval mechanism for a NHM Service reservation shall be the tag approval. If the tag is approved and moved to the IMPLEMENT or CONDITIONAL state, all required NHM Service transmission reservations associated with that tag shall be considered confirmed reservations. If one or more transmission providers do NOT approve their segment(s) of the transaction, then the transaction shall be considered NOT approved. Each transmission provider designated in a tag that does not approve that segment of the tag shall indicate that the associated reservation for that segment is REFUSED. If a designated transmission provider in a NHM Service path segment approves the tag but the tag is not approved through the action or inaction of another transmission provider, then that transmission provider shall indicate that reservation is ANNULLED.

Standard 7.15: The transmission provider shall assign the reservation request and final disposition status on behalf of the transmission customer within one hour of the requested start of the NHM Service transaction, regardless of the ultimate disposition of the tag.

Standard 7.16: NHM Service shall have the lowest curtailment priority in the event that a curtailment or reduction of transfers is initiated. Specifically, NHM Service (0–NX) shall have a NERC Curtailment Priority of 0.

[FR Doc. 00–27993 Filed 10–31–00; 8:45 am]

BILLING CODE 6717–01–P

DEPARTMENT OF HEALTH AND HUMAN SERVICES

Food and Drug Administration

21 CFR Part 558

New Animal Drugs for Use in Animal Feeds; Narasin and Tylosin Phosphate

AGENCY: Food and Drug Administration, HHS.

ACTION: Final rule.

SUMMARY: The Food and Drug Administration (FDA) is amending the animal drug regulations to reflect approval of a new animal drug application (NADA) filed by Elanco Animal Health. The NADA provides for use of approved, single-ingredient narasin and tylosin phosphate Type A medicated articles to make two-way combination Type C medicated feeds used as an aid in the prevention of coccidiosis, for increased rate of weight gain, and improved feed efficiency in broiler chickens.

DATES: This rule is effective November 1, 2000.

FOR FURTHER INFORMATION CONTACT: Charles J. Andres, Center for Veterinary Medicine (HFV–128), Food and Drug Administration, 7500 Standish Pl., Rockville, MD 20855, 301–827–1600.

SUPPLEMENTARY INFORMATION: Elanco Animal Health, A Division of Eli Lilly & Co., Lilly Corporate Center, Indianapolis, IN 46285, filed NADA 141–170 that provides for use of MONTEBAN® (36, 45, 54, 72, or 90 grams per pound (g/lb) narasin activity) and TYLAN® (10 g/lb of tylosin phosphate) Type A medicated articles to make combination Type C medicated broiler chicken feeds. The combination Type C medicated feeds contain 54 to 72 g/ton narasin and 4 to 50 g/ton tylosin phosphate and are used for the prevention of coccidiosis caused by *Eimeria necatrix*, *E. tenella*, *E. acervulina*, *E. brunetti*, *E. mivati*, and *E. maxima*, increased rate of weight gain, and improved feed efficiency in broiler chickens. The NADA is approved as of September 20, 2000, and the regulations in §§ 558.363 and 558.625 (21 CFR 558.363 and 558.625) are amended to reflect the approval. The basis of approval is discussed in the freedom of information summary.

In accordance with the freedom of information provisions of 21 CFR part 20 and 514.11(e)(2)(ii), a summary of safety and effectiveness data and information submitted to support approval of this application may be seen in the Dockets Management Branch (HFA–305), Food and Drug Administration, 5630 Fishers Lane, rm. 1061, Rockville, MD 20852, between 9 a.m. and 4 p.m., Monday through Friday.

The agency has determined under 21 CFR 25.33(a)(2) that this action is of a type that does not individually or cumulatively have a significant effect on the human environment. Therefore, neither an environmental assessment nor an environmental impact statement is required.

This rule does not meet the definition of ''rule'' in 5 U.S.C. 804(3)(A) because it is a rule of ''particular applicability.'' Therefore, it is not subject to the congressional review requirements in 5 U.S.C. 801–808.

List of Subjects in 21 CFR Part 558

Animal drugs, Animal feeds.

Therefore, under the Federal Food, Drug, and Cosmetic Act and under authority delegated to the Commissioner of Food and Drugs and redelegated to the Center for Veterinary Medicine, 21 CFR part 558 is amended as follows:

PART 558—NEW ANIMAL DRUGS FOR USE IN ANIMAL FEEDS

1. The authority citation for 21 CFR part 558 continues to read as follows:

Authority: 21 U.S.C. 360b, 371.

2. Section 558.363 is amended in paragraph (d)(1) by adding paragraph (d)(1)(xi) to read as follows:

§ 558.363 Narasin.

* * * * *

(d) * * *

(1) * * *

(xi) *Amount per ton*. Narasin, 54 to 72 grams, plus tylosin, 4 to 50 grams.

(A) *Indications for use*. As an aid in the prevention of coccidiosis caused by *Eimeria necatrix*, *E. tenella*, *E. acervulina*, *E. brunetti*, *E. mivati*, and *E. maxima*, for increased rate of weight gain, and improved feed efficiency.

(B) *Limitations*. For broiler chickens only. Feed continuously as sole ration. Do not allow adult turkeys, horses, or other equines access to formulations containing narasin. Ingestion of narasin by these species has been fatal. Narasin sodium and tylosin phosphate as provided by 000986 in § 510.600(c) of this chapter.

* * * * *

3. Section 558.625 is amended by revising paragraph (f)(2) to read as follows:

§ 558.625 Tylosin.

* * * * *

(f) * * *

(2) Tylosin may also be used in combination with:

(i) Hygromycin B as in § 558.274.

(ii) Melengestrol acetate alone or in combination with certain ionophores as in § 558.342.

(iii) Monensin as in § 558.355.

(iv) Narasin as in § 558.363.

(v) Pyrantel tartrate as in § 558.485.

Dated: October 16, 2000.

Stephen F. Sundlof,

Director, Center for Veterinary Medicine.

[FR Doc. 00–27967 Filed 10–31–00; 8:45 am]

BILLING CODE 4160–01–F

ENVIRONMENTAL PROTECTION AGENCY

40 CFR Part 300

[FRL–6893–3]

National Oil and Hazardous Substances Pollution Contingency Plan; National Priorities List Update

AGENCY: Environmental Protection Agency.

ACTION: Notice of deletion of the Publicker Industries Inc. Superfund Site from the National Priorities List (NPL).

SUMMARY: The Environmental Protection Agency (EPA) announces the deletion of the Publicker Industries Inc. Superfund Site (Site) in Philadelphia, Pennsylvania from the National Priorities List (NPL). The NPL constitutes Appendix B of 40 CFR Part 300 which is the National Oil and Hazardous Substances Pollution Contingency Plan (NCP), which EPA promulgated pursuant to section 105 of the Comprehensive Environmental Response, Compensation, and Liability Act of 1980 (CERCLA), as amended. EPA and the Commonwealth of Pennsylvania, through the Pennsylvania Department of Environmental Protection, have determined that the remedial action for the Site has been successfully implemented under CERCLA. For this Site, the selected remedy is protective of human health and the environment as long as the property is used only for industrial purposes.

EFFECTIVE DATE: November 1, 2000.

ADDRESSES: Comprehensive information on this Site is available for viewing at the repository at the following location: U.S. Environmental Protection Agency, Region III, Regional Center for Environmental Information, 1650 Arch Street, Philadelphia, Pennsylvania 19103. Telephone (215) 814–5254.

FOR FURTHER INFORMATION CONTACT: Kristine Matzko(3HS21), U.S. Environmental Protection Agency, Region III, 1650 Arch Street, Philadelphia, PA 19103. Telephone 215–814–5719.

SUPPLEMENTARY INFORMATION: The site to be deleted from the NPL is: Publicker Industries Inc. Superfund Site.

EPA published a Notice of Intent to Delete (NOID) the Publicker Industries Inc. Superfund Site from the NPL on July 20, 2000 in the **Federal Register** (65 FR 45013). The closing date for comments on the NOID was August 21, 2000. EPA did not receive any comments on the proposed deletion. Therefore, no responsiveness summary is necessary for attachment to this Notice of Deletion.

EPA identifies sites that appear to present a significant risk to public health, welfare, or the environment and it maintains the NPL as the list of these sites. As described in § 300.425(e)(3) of the NCP, sites deleted from the NPL remain eligible for remedial actions in the unlikely event that future conditions at the site warrant such action.

Deletion of a site from the NPL does not affect responsible party liability or impede EPA efforts to recover costs associated with response efforts.

List of Subjects in 40 CFR Part 300

Environmental protection, Air pollution control, Chemicals, Hazardous substances, Hazardous waste, Intergovernmental relations, Penalties, Reporting and recordkeeping requirements, Superfund, Water pollution control, and Water supply.

Dated: October 6, 2000.

Bradley M. Campbell,

Regional Administrator, U.S. EPA Region III.

For the reasons set out in the preamble, 40 CFR Part 300 is amended as follows:

PART 300—[AMENDED]

1. The authority citation for part 300 continues to read as follows:

Authority: 33 U.S.C. 1321(c)(2); 42 U.S.C. 9601–9657; E.O. 12777, 56 FR 54757, 3 CFR, 1991 Comp., p. 351; E.O. 12580, 52 FR 2923, 3 CFR, 1987 Comp., p. 193.

Appendix B—[Amended]

2. Table 1 of Appendix B to part 300 is amended by removing the site for ''Publicker Industries Inc.,'' Philadelphia, Pennsylvania.

[FR Doc. 00–27780 Filed 10–31–00; 8:45 am]

BILLING CODE 6560–50–P

FEDERAL COMMUNICATIONS COMMISSION

47 CFR Part 73

[DA 00–2331; MM Docket No. 00–112; RM–9901]

Radio Broadcasting Services; Weiser, ID; Correction

AGENCY: Federal Communications Commission.

ACTION: Correcting amendments.

SUMMARY: This document contains corrections to the final regulations, which were published in the **Federal Register** on September 20, 2000 (65FR56799). The regulations related to

the information concerning Radio Broadcasting Services in Weiser, ID. This document contains a correction to that rule.

DATES: Effective on November 1, 2000.

FOR FURTHER INFORMATION CONTACT: Leslie K. Shapiro, Mass Media Bureau, (202) 418–2180.

SUPPLEMENTARY INFORMATION: This document corrects Section 73.202(b), the Table of FM Allotment under Oregon to remove Weiser, Channel 280C1 and by adding Weiser, Channel 280C1 under Idaho. FR Doc. 00–24069, published on September 20, 2000 (65FR56799), inadvertently added Weiser, Channel 280C1 to Oregon instead of Idaho.

List of Subjects 47 CFR Part 73

Radio broadcasting.

Accordingly, 47 CFR part 73 is corrected by making the following correcting amendments:

PART 73—[RADIO BROADCAST SERVICES]

1. The authority citation for Part 73 continues to read as follows:

Authority: 47 U.S.C. 154, 303, 334 and 336.

§ 73.202 [Amended]

2. Section 73.202(b), the Table of FM Allotments under Oregon, is amended by removing Weiser, Channel 280C1.

3. Section 73.202(b), the Table of FM Allotments under Idaho, is amended by adding Weiser, Channel 280C1.

Federal Communications Commission.

John A. Karousos,

Chief, Allocations Branch, Policy and Rules Division, Mass Media Bureau.

[FR Doc. 00–27990 Filed 10–31–00; 8:45 am]

BILLING CODE 6712–01–P

DEPARTMENT OF COMMERCE

National Oceanic and Atmospheric Administration

50 CFR Part 660

[Docket No. 000831250–0250–01; 102500C]

Fisheries off West Coast States and in the Western Pacific; Coastal Pelagic Species Fisheries; Closure of Directed Fishery for Pacific Mackerel

AGENCY: National Marine Fisheries Service (NMFS), National Oceanic and Atmospheric Administration (NOAA), Commerce.

ACTION: Closure of directed fishery for Pacific mackerel.

SUMMARY: NMFS announces the closure of the directed fishery for Pacific mackerel in the exclusive economic zone off the Pacific coast October 27, 2000.The Coastal Pelagic Species Fishery Management Plan (FMP) and its implementing regulations require NMFS to set an annual harvest guideline for Pacific mackerel based on a formula in the FMP and to close the fishery when the harvest guideline is reached. The harvest guideline of 20,740 metric tons is projected to be reached before the end of the fishing season on June 30, 2001, which requires closing the directed fishery and setting an incidental harvest limit for Pacific mackerel so that the harvest of other coastal pelagic species will not be further restricted. The intended effect of this action is to ensure conservation of the Pacific mackerel resource.

DATES: Effective October 27, 2000.

ADDRESSES: The data that was used as the basis for this action are available for public inspection at the Office of the Regional Administrator, Rebecca Lent, Southwest Region (Regional Administrator), NMFS, 501 W. Ocean Boulevard, Suite 4200, Long Beach, CA 90802-4213.

FOR FURTHER INFORMATION CONTACT: James J. Morgan, Southwest Region, NMFS, (562) 980-4036.

SUPPLEMENTARY INFORMATION: On September 11, 2000, NMFS announced a harvest guideline in the **Federal Register** (65 FR 54817) for Pacific mackerel of 20,740 mt for the fishing season of July 1, 2000 through June 30, 2001. The harvest guideline was based on an annual biomass estimate and calculated using a formula in the FMP applying information on that portion of the stock in U.S. waters and the required harvest rate above a minimum biomass.

As of October 17, 2000, 17,829 mt of Pacific mackerel has been harvested. The FMP states that incidental catch allowances are applied when a stock is overfished or a harvest guideline is met, but may be employed under other conditions such as to avoid premature filling of a harvest guideline due to the incidental catch. The high harvest rate of Pacific mackerel will lead to reaching the harvest guideline well before the end of the season and at a time when sardine harvests are likely to be high; therefore, the remaining harvest guideline will be set aside to account for incidental harvests of Pacific mackerel when fishing for sardine. This will tend to minimize bycatch of Pacific mackerel while allowing the sardine fishery to be conducted without further restrictions.

The FMP allows the setting of incidental catch allowances from zero to 45 percent of the landed weight as determined by the Pacific Fishery Management Council (Council) and/or the NMFS Regional Administrator. The Council's Coastal Pelagic Species Management Team and the Coastal Pelagic Species Advisory Subpanel on October 17-18, 2000 recommended closing the directed fishery for Pacific mackerel and imposing an incidental harvest limit of no more than 20 percent by weight of Pacific mackerel in landings of Pacific sardine. These incidental catch allowances will avoid unnecessary discard; ensure that optimum yield is taken, but not exceeded; and promote efficiency and profitability in the fishery.

For the reasons stated here and in accordance with the FMP and its implementing regulations at 50 CFR 660.509, the directed fishery for Pacific mackerel will be closed October 27, 2000, after which time no more than 20 percent by weight of any landing of Pacific sardine may be Pacific mackerel.

Classification

This action is required by 50 CFR 660.509 and is exempt from review under Executive Order 12866.

Authority: 16 U.S.C. 1801 *et seq.*

Dated: October 27, 2000.

Bruce C. Morehead,

Acting Director, Office of Sustainable Fisheries, National Marine Fisheries Service.

[FR Doc. 00–28019 Filed 10–27–00; 2:41 pm]

BILLING CODE 3510–22–S

DEPARTMENT OF COMMERCE

National Oceanic and Atmospheric Administration

50 CFR Part 679

[Docket No. 000211040-0040-01; I.D. 102400C]

Fisheries of the Exclusive Economic Zone Off Alaska; Pacific Cod in the Bering Sea and Aleutian Islands Management Area

AGENCY: National Marine Fisheries Service (NMFS), National Oceanic and Atmospheric Administration (NOAA), Commerce.

ACTION: Reallocation.

SUMMARY: NMFS is reallocating the projected unused amount of Bering Sea and Aleutian Islands management area (BSAI) Pacific cod from trawl catcher/processors and vessels using jig gear to vessels using hook-and-line or pot gear.

These actions are necessary to allow the 2000 total allowable catch (TAC) of Pacific cod to be harvested.

DATES: Effective October 27, 2000.

FOR FURTHER INFORMATION CONTACT: Andrew N. Smoker, 907-586-7228.

SUPPLEMENTARY INFORMATION: NMFS manages the groundfish fishery in the BSAI according to the Fishery Management Plan for the Groundfish Fishery of the Bering Sea and Aleutian Islands Area (FMP) prepared by the North Pacific Fishery Management Council under authority of the Magnuson-Stevens Fishery Conservation and Management Act. Regulations governing fishing by U.S. vessels in accordance with the FMP appear at subpart H of 50 CFR part 600 and 50 CFR part 679.

In accordance with § 679.20(c)(5), the Pacific cod TAC for the BSAI was established as 193,000 metric tons (mt) by the Final 2000 Harvest Specifications for Groundfish for the BSAI (65 FR 8282, February 18, 2000). Of this amount, 3,571 mt was allocated to vessels using jig gear, 41,953 mt to trawl catcher vessels, 41,953 mt to trawl catcher/processors, and 91,048 mt to vessels using hook-and-line or pot gear.

On October 2, 2000, NMFS published a request for public comment on a proposed reallocation of 9,000 mt of BSAI Pacific cod from trawl catcher/processors to vessels using hook-and line or pot gear (65 FR 58727). One written comment was received in support of the reallocation. From the years 1997 through 1999 after September 1, the trawl catcher vessel sector of the fishery took about 200 mt or less per year in the Pacific cod target and averaged about 800 mt of catch of Pacific cod in all targets. Current inseason data support a projection of 800 mt for the catcher vessel sector. At this time, no evidence exists that the trawl catcher vessel effort in the Pacific cod fishery will increase beyond what has occurred on the average during the last 3 years.

Accordingly, the Administrator, Alaska Region, NMFS (Regional Administrator), has determined that trawl catcher/processors will not be able to harvest 9,000 mt of Pacific cod allocated to those vessels under § 679.20(a)(7)(i)(A).

Therefore, in accordance with § 679.20(a)(7)(ii)(C), NMFS apportions 9,000 mt of Pacific cod from trawl catcher/processors to vessels using hook-and-line or pot gear.

The Regional Administrator also has determined that vessels using jig gear will not harvest 3,000 mt of Pacific cod by the end of the year. Therefore, in accordance with § 679.20(a)(7)(ii)(C), NMFS is reallocating the unused amount of 3,000 mt of Pacific cod allocated to vessels using jig gear to vessels using hook-and-line or pot gear.

In accordance with § 679.20(a)(7)(ii)(C)(2), the combined reallocation of unused Pacific cod from jig gear and trawl catcher/processors, 12,000 mt is apportioned so that catcher/processor vessels using hook-and-line gear will receive 95 percent and vessels using pot gear will receive 5 percent of the reallocation. The harvest specifications for Pacific cod established in the Final 2000 Harvest Specifications for Groundfish for the BSAI (65 FR 8282, February 18, 2000) and adjusted for hook-and-line or pot gear under Amendment 64 to the FMP (65 FR 51553, August 24, 2000) are revised as follows: 571 mt to vessels using jig gear, 41,953 mt to trawl catcher vessels, 32,953 mt to trawl catcher/processors, 81,958 mt to vessels using hook-and-line gear, and 17,170 mt to pot gear.

Classification

This action is taken under 50 CFR 679.20 and is exempt from Office of Management and Budget review under Executive Order 12866.

The Assistant Administrator for Fisheries, NOAA, has determined, under 5 USC 553(b)(3)(B) and 50 CFR 679.20(b)(3)(iii)(A), that good cause exists for waiving the opportunity for public comment as such procedures would be unnecessary and contrary to the public interest. Fisheries are currently taking place that will be supplemented by this apportionment. Delaying the implementation of this action would be disruptive and costly to these ongoing operations. Similarly, pursuant to 5 USC 553(d)(3), good cause exists to waive the 30-day delay in effectiveness of this action.

Authority: 16 U.S.C. 1801 *et seq.*

Dated: October 27, 2000.

Bruce C. Morehead,

Acting Director, Office of Sustainable Fisheries, National Marine Fisheries Service.

[FR Doc. 00–28023 Filed 10–27–00; 2:41 pm]

BILLING CODE 3510–22–S

Proposed Rules

Federal Register

Vol. 65, No. 212

Wednesday, November 1, 2000

This section of the FEDERAL REGISTER contains notices to the public of the proposed issuance of rules and regulations. The purpose of these notices is to give interested persons an opportunity to participate in the rule making prior to the adoption of the final rules.

POSTAL SERVICE

39 CFR Part 111

Standards Governing the Design of Curbside Mailboxes

AGENCY: Postal Service.

ACTION: Proposed rule.

SUMMARY: The Postal Service proposes to revise USPS STD 7A, which governs the design of curbside mailboxes. The proposed revision was developed through a consensus process and was approved by a committee of representatives from mailbox manufacturers, mailbox accessory manufacturers, and the Postal Service.

DATES: The Postal Service must receive written comments on or before December 1, 2000.

ADDRESSES: Written comments should be mailed to Civil Practice Section, Law Department, U.S. Postal Service, 475 L'Enfant Plaza SW., Room 6235, Washington DC 20260–1127. Copies of all written comments will be available for public inspection and copying between 9:00 a.m. and 4:00 p.m., Monday through Friday, at the address above.

FOR FURTHER INFORMATION CONTACT: Annamarie Gildea, (202) 268–3558.

SUPPLEMENTARY INFORMATION: U.S. Postal Service Standard, Mailboxes, City and Rural Curbside, USPS STD 7A, governs the design of curbside mailboxes. The current standard, adopted in 1992, prescribes design limitations in terms that are no longer consistent with the operational requirements of the Postal Service.

The Postal Service used a consensus process in developing the proposed revised standard. In a consensus process, representatives of interests that would be substantially affected by a new rule meet as an advisory committee and negotiate among themselves and with the agency to reach a consensus on a proposed new rule. As part of the consensus process, the agency agrees to use a recommendation by the committee as the basis of the proposed rule. In addition, each private member of the Committee agrees that, if it agrees to a recommendation by the Committee, it will support that recommendation and the proposed rule to the extent that it reflects the recommendation.

In this instance, the Postal Service retained the services of an independent, neutral third party to convene a Consensus Committee and facilitate discussions of Committee members. Based on the Convenors' recommendation, the Postal Service invited Consensus Committee members representing interests that were expected to be substantially affected by the new rule. Further, Committee members were responsible for representing other interested individuals and organizations that were not present at committee meetings and keeping them informed of the Committee's proceedings.

As part of the ground rules agreed to by all members of the Consensus Committee, the Postal Service agreed to use a recommendation by the Committee as the basis of the proposed rule. In addition, each private member of the Committee agreed that, if it agreed to a recommendation by the Committee, it would support that recommendation and the proposed rule to the extent that it reflects the recommendation. After the Consensus Committee held several meetings that were open to the public, the Committee approved and recommended the standard set forth below.

Changes incorporated in the proposed new standard, which shall be titled USPS STD 7B include the following:

1. Eliminated the requirement that Traditional mailboxes must be built in conformance with USPS drawings (formerly designated T1, T2, and T3). All three USPS drawings were eliminated and replaced with a new figure which gives manufacturers more design flexibility.
2. Removed all requirements to comply with military and federal specifications and standards.
3. Deleted flammability, solar exposure, and color intensity test requirements that were determined to be invalid or unnecessary.
4. Dropped requirement that manufacturers comply with the National Motor Freight Classification Rule 222.
5. Introduced a new Locked mailbox classification with two new figures. This design will provide customers with an option to purchase mailboxes that offer increased security for their mail.
6. Incorporated quality assurance provisions.
7. Added a figure depicting three new alternative flag designs.
8. Included new guidelines and a figure for acceptable door handle and knob designs.
9. Clarified application requirements and introduced independent laboratory testing.

Re-approval of Manufacturers' Curbside Mailboxes

The re-approval process for manufacturers with mailbox designs that were approved before the final publication date of USPS STD 7B will be conducted as follows. The approval process for all other mailbox designs will be conducted in accordance with USPS STD 7B, part 5.

1. The USPS will notify currently approved manufacturers within five business days after final publication of USPS STD 7B in the **Federal Register** when to submit their mailboxes for re-approval. All mailboxes must be submitted to: Attn Test Evaluation & Quality, USPS Engineering, 8403 Lee Hwy, Merrifield, VA 22082–8101.
2. Manufacturers will have 90 days after receipt of this notification to submit a sample of each of their previously approved mailboxes. In addition, manufacturers shall submit their quality assurance manual, and each mailbox must be accompanied with a compliance certificate, one set of drawings, product information, and instructions. Mailboxes will be tested on a first-come, first-served basis.
3. If a previously approved mailbox is not submitted within the 90-day period, it will automatically lose its approval status. A manufacturer may receive an extension of up to 45 days, provided reasonable justification is demonstrated to the USPS. Manufacturers seeking an extension must write to: Attn Delivery & Retail Systems, USPS Information Platform, 8403 Lee Hwy, Merrifield, VA 22082–8101.
4. The USPS will have up to 90 days to respond to submissions, during which time manufacturers can continue to sell their mailboxes.
5. If a submitted mailbox does not pass the revised standard's requirements, the manufacturer may make modifications and re-submit their

mailbox one additional time. The manufacturer will have 45 days after the date of USPS's notice of denial of the manufacturer's first application to submit a second sample. Should the second sample fail testing, the manufacturer has up to 180 days from notification of failure to cease selling it. The manufacturer is also to cease production immediately and use the 180 days to deplete existing inventory.

6. If a mailbox fails two testing attempts, manufacturers may still make modifications and re-submit in accordance with the new application requirements specified in the revised standard. However, the conditions identified in #5 above remain in effect.

List of Subjects in 39 CFR Part 111

Postal Service.

PART 111—[AMENDED]

1. The authority citation for 39 CFR part 111 continues to read as follows:

Authority: 5 U.S.C. § 552(a), 39 U.S.C. §§ 101, 401, 403, 404, 3001–3011, 3201–3219, 3403–3406, 3621, 3626, 5001.

2. Revise USPS STD 7A as set forth below:

1 SCOPE AND CLASSIFICATION

1.1 Scope

This standard covers all curbside mailboxes. Curbside mailboxes are defined as any design made to be served by a carrier from a vehicle on any city, rural, or highway contract route. This standard is not applicable to mailboxes intended for door delivery service (see 6.1).

1.2 Classifications

Based on their size and design, curbside mailboxes are classified as:

T—Traditional, Full or Limited Service (see 3.2.1 and Figure 1).

C—Contemporary, Full or Limited Service (see 3.2.2).

L—Locked, Full or Limited Service (see 3.2.3 and Figures 2 and 3).

1.3 Approved Models

1.3.1 Approved Models

Manufacturers whose mailboxes have been approved by the United States Postal Service (USPS) will be listed in the Postal Operations Manual (POM) and published in the Postal Bulletin.

1.3.2 Interested Manufacturers

Manufacturing standards and current information concerning the manufacture of curbside mailboxes may be obtained by writing to: USPS Information Platform, Delivery and Retail Operation Equipment, 8403 Lee Hwy, Merrifield, VA 22082–8101.

2 APPLICABLE DOCUMENTS

2.1 Specifications and Standards

Except where specifically noted, the specifications set forth herein shall apply to all curbside mailbox designs.

2.2 Government Documents

The following documents of the latest issue are incorporated by reference as part of this standard.

United States Postal Service

DMM Domestic Mail Manual

POM Postal Operations Manual

Copies of the Domestic Mail Manual can be obtained from the Government Printing Office, Mail Stop SSOM, 732 N Capitol Street NW., Washington DC 20402–9375. It is available on the Internet also at http://pe.usps.gov.

Copies of the Postal Operations Manual can be obtained from the USPS Material Distribution Center, 500 SW. Montara Pkwy, Topeka KS 66624–9702.

2.3 Non-Government Documents

The following documents of the latest issue are incorporated by reference as part of this standard.

American Standards for Testing Materials (ASTM)

ASTM G85 Standard Practice for Modified Salt Spray (Fog) Testing

ASTM D968 Standard Test Methods for Abrasion Resistance of Organic Coatings by Falling Abrasive

Copies of these documents can be obtained from the American Society for Testing and Materials, 1916 Race Street, Philadelphia PA 19103–1108.

Underwriters Laboratories

UL 771 Night Depositories (Rain Test Only)

Copies of this document can be obtained from Underwriters Laboratories Inc., 333 Pfingsten Road, Northbrook IL 60062–2096.

American Society for Quality

ANSI/ASQC Q9002–1994 Quality Systems—Model for Quality Assurance in Production, Installation, and Servicing

ANSI/ISO/ASQC Q10013–1995 Guidelines for Developing Quality Manuals

Copies of these documents can be obtained from the American Society for Quality, PO Box 3066, Milwaukee WI 53201–3066.

3 REQUIREMENTS

3.1 Quality

Mailbox manufacturers must ensure and be able to substantiate that units manufactured conform to the requirements of this specification.

3.1.1 Inspection

The Postal Service reserves the right to inspect units for conformance to this specification at any stage of manufacture. Inspection by the Postal Service does not relieve the manufacturer of the responsibility to provide performance that conforms to the requirements set forth in this specification. Prior to any visits, the Postal Service will provide a minimum notice of 30 business days. The Postal Service will suspend the approval status of any manufacturer's model which is found to be out of conformance with approved drawings (see 5.2.2).

3.1.2 System

The manufacturer shall use a documented quality system acceptable to the Postal Service. As a minimum, the manufacturer's quality system shall include controls and record keeping in the following areas (a quality system in compliance with ANSI/ASQC Q9002–1994 meets this requirement):

3.1.2.1 Inspection and testing;

3.1.2.2 Inspection, measuring, and test equipment;

3.1.2.3 Control of nonconforming products;

3.1.2.4 Document control; and

3.1.2.5 Corrective action.

3.1.3 System Evaluation

The Postal Service has the right to evaluate the acceptability and effectiveness of the manufacturer's quality system before approval and during tenure as an approved source.

3.1.4 Records

All of the manufacturer's records pertaining to the approved product shall be kept for a minimum of three years after shipment of product.

3.2 General Design

Mailboxes must meet regulations and requirements as stipulated in paragraph 2.2. This includes carrier door operation as stated in 3.4, flag operation as stated in 3.7, incoming mail openings, and the retrieval of outgoing mail. The opening style, design, and size are determined by the manufacturer; however, the carrier must be able to deposit the customer's mail through the slot or open door with a single motion of the carrier's arm. Outgoing mail of all designs must be able to be pulled straight out of the mailbox without interference from protrusions, hardware, etc. Mailboxes must be capable of passing the applicable testing requirements in 3.15. Mailboxes must not be made of any

transparent, toxic, or flammable material (see 3.3). The mailbox must protect mail from water damage which may result from wet weather conditions (see 3.15.3). Any and all advertising on a mailbox or its support is prohibited. Additional specific requirements follow.

3.2.1 Traditional Designs (Limited and Full Service)

Mailbox designs that conform to Figure 1 and meet capacity requirements specified in 3.15.1 will be classified as Traditional. Designs incorporating a carrier signal flag (see 3.7) will be classified as full service mailboxes. Designs with no flag will be classified as limited service (see 3.12.2). As specified in 3.5, a rear door is permitted to enable the customer to remove mail without standing in the street. The use of locks, locking devices, or inserts is prohibited.

3.2.2 Contemporary Designs (Limited and Full Service)

Mailbox designs that do not conform to the dome-rectangular shape of Traditional designs but meet capacity requirements specified in 3.15.1 will be classified as Contemporary. Designs incorporating a carrier signal flag (see 3.7) will be classified as full service mailboxes. Designs with no flag will be classified as limited service (see 3.12). Although the shape and design is less restrictive, Contemporary mailboxes must meet the same applicable functional requirements. Contemporary designs can also incorporate a rear door, as specified in 3.5, to enable the customer to remove mail without standing in the street. The use of locks, locking devices, or inserts is prohibited.

3.2.3 Locked Designs

Mailbox designs that provide security for customer's incoming mail will be classified as Locked mailboxes (see Figures 2 and 3). Although the shape and design is less restrictive, Locked mailboxes must meet the same applicable functional requirements. Designs having a slot for incoming mail must be at least 1.75 inches high by 10 inches wide. If a slot has a protective flap it must operate inward to ensure mail can be inserted in horizontal manner without requiring any additional effort of carriers (see Figure 3). The slot must be positioned on the front side of the mailbox facing the street. In addition, the slot must be clearly visible and directly accessible by mail carriers. Any designs that allow for outgoing mail must meet all applicable requirements of this standard.

3.2.3.1 Full Service

Locked mailbox designs of this class allow for both incoming and outgoing mail as depicted in Figure 2. It is preferred that both incoming and outgoing mail compartments be located behind a single carrier service door as shown in Figure 2 (the term ''preferred'' in this document means that compliance is desired but not mandatory). Alternate positioning of the incoming mail compartment, such as beneath or side-by-side with the outgoing compartment, is permitted provided that no additional carrier service is introduced.

3.2.3.2 Limited Service

Locked mailbox designs of this class allow only for incoming mail as shown in Figure 3.

3.2.4 Mailbox Accessories

Decorative art and devices can be attached to the exterior of approved mailbox designs provided they do not interfere with mail delivery or present a safety hazard. Devices can also be mounted in the interior of approved mailboxes provided they do not cause the mailbox to fail the capacity test described in 3.15.1 and do not interfere with mail delivery or present a safety hazard. Any and all advertising on a mailbox or its support is prohibited. Unrestricted spring-loaded devices and designs are prohibited. Auxiliary flags or devices used to signal the customer that the mail has arrived must operate automatically without requiring additional carrier effort.

3.3 Materials

Ferrous or nonferrous metal, wood (restrictions apply), plastic, or other materials may be used, as long as their thickness, form, mechanical properties, and chemical properties adequately meet the operational, structural, and performance requirements set forth in this standard. Materials used must not be toxic, flammable, or transparent.

3.3.1 Mailbox Floor

The entire bottom area of all mailboxes where mail would rest shall be fabricated to prevent mail from damage due to condensation or moisture. Except for the internal mail compartment of locked-style mailboxes, all designs must not present a lip or protrusion that would prevent the mail from being inserted or pulled straight out of the mailbox. The surface of the floor cannot be made of wood material. The floor shall be ribbed as shown in Figures 1, 2, and 3 or dimpled, embossed, or otherwise fabricated provided the resulting surface area (touching mail) does not exceed .25 square inch (per dimple/impression) and is minimum of .12 inch high on centers not exceeding 1 inch. A mat insert having a raised surface contour may be used for the internal mail compartment of locked-style mailboxes only (see Figures 2 and 3).

3.3.2 Carrier Signal Flag

Cannot be made of wood. Plastic is the preferred material.

3.3.3 Door Handle

Cannot be made of wood. Plastic is the preferred material.

3.4 Carrier Service Door

There shall be only one carrier service door, which must provide access for mail delivery and collection intended by the unit and meet USPS delivery operational requirements (see 2.2). The door must meet the applicable testing requirements specified in 3.15.2. The carrier service door must operate freely and solely by pulling outward and downward with a convenient handle or knob. The design of the door, including hinges and handles, must provide protection against wind, rain, sleet, or snow (see 3.15.3). Door latches must hold the door closed but allow easy opening and closing requiring no more than 5 pounds of force. Action of the latch must be a positive mechanical one not relying solely on friction of the hinge parts. The door shall not be spring-loaded. Magnetic latches are acceptable provided adequate closure power is maintained during ambient conditions specified in 3.15.6 and applicable testing described in 3.15. It is preferred that by either tactile or by sound (*i.e.*, snap or click) carriers are alerted that the door is properly shut. The door, once opened, must remain in the open position until the carrier pushes it closed. The door must rotate a minimum of 100 degrees when opened and it is preferred that the maximum rotation be limited to 120 degrees or less. When in a fully opened and rest position, the opening angle of the door cannot measure more than 180 degrees. No protrusions other than the handle or knob, door catch, alternate flag design, decorative features, or markings are permitted on the carrier service door. Decorative features or markings must not interfere with delivery or present a safety hazard. Protrusions of any kind that cause a mailbox to fail the capacity test described in 3.15.1 are prohibited. See section 3.2.3 for carrier service door requirements for Locked mailbox designs.

3.4.1 Handle/Knob

The handle or knob shall have adequate accessibility to permit quickly grasping and pulling it with one hand (with or without gloves) to open the door. The handle or knob shall be located within the top third of the door. Various acceptable handle and knob designs with required dimensions are depicted in Figure 5. Other designs may be acceptable, provided they allow enough finger clearance and surface area for carriers to grasp.

3.5 Rear Doors

Mailboxes may have a rear door, provided that it does not interfere with the normal delivery and collection operation provided by the carrier or require the carrier to perform any unusual operations. The rear door must not be susceptible to being forced open as a result of large mail items such as newspapers and parcels being inserted through the carrier door. The rear door must meet the applicable testing requirements specified in 3.15.

3.6 Locks

Locked mailbox designs shall have an effective means to ensure that incoming mail is accessible only by the customer. The use of locks on Contemporary and Traditional mailbox designs is prohibited. Manufacturers must include the following statement in their instructions to customers: ''IT IS IMPORTANT TO NOTE THAT IT IS NOT THE RESPONSIBILITY OF MAIL CARRIERS TO OPEN MAILBOXES THAT ARE LOCKED, ACCEPT KEYS FOR THIS PURPOSE, OR LOCK MAILBOXES AFTER DELIVERY OF THE MAIL.''

3.7 Carrier Signal Flag

Traditional, Contemporary, and Locked mailbox designs classified as Full Service shall have a carrier signal flag. The flag design must be one of the approved concepts depicted in Figures 1, 2, and 4. As shown in each figure, the flag must be mounted on the right side when facing the mailbox from the front. The flag must not require a lift or more than 2 pounds of force to retract. Additionally, when actuated (signaling outgoing mail) the flag must remain in position until retracted by the carrier. The color of the flag must be in accordance with requirements described in 3.10. The operating mechanism of the flag must not require lubrication and must continue to operate properly and positively (without binding or excessive free play) after being subjected to testing described in 3.15. Optionally, the flag may incorporate a self-lowering feature that causes it to automatically retract when the carrier service door is opened, provided no additional effort is required of the carrier. The self-lowering feature cannot present protrusions or attachments and must not interfere with delivery operations in any manner or present hazardous features as specified in 3.2.

3.8 Marking

The mailbox must bear two inscriptions on the carrier service door: ''U.S. MAIL'' in a minimum of .50-inch-high letters and ''Approved By The Postmaster General'' in a minimum of .18-inch-high letters. These inscriptions may be positioned beneath the incoming mail slot for Limited Service Locked mailboxes as shown in Figure 3. Markings must be permanent and may be accomplished by applying a decal, embossing on sheet metal, raised lettering on plastic, engraving on wood, or other methods that are suitable for that particular unit. The manufacturer's name, address, date of manufacture (month and year), and model number or nomenclature must be legible and permanently marked or affixed on a panel (rear, backside of door, bottom, or side interior near the carrier service door) of the mailbox that is readily accessible and not obscured.

3.8.1 Modified Mailbox Marking

Mailboxes that use previously approved units in their design must include marking stating the new manufacturer's name, address, date of manufacture, and model nomenclature in a permanent fashion and location as described above. Additionally, the ''U.S. MAIL'' and ''Approved By The Postmaster General'' marking shall be reapplied if it is obscured or obliterated by the new design.

3.9 Coatings and Finishes

Choice of coatings and finishes is optional, provided all requirements of this standard are met. All coatings and finishes must be free from flaking, peeling, cracking, crazing, blushing, and powdery surfaces. Coatings and finishes must be compatible with the mailbox materials. Accept for small decorative accents, mirrorlike coatings or finishes are prohibited. The coating or finish must meet the applicable testing requirements described in 3.15.5.

3.10 Color

The color of the mailbox and flag must be in accordance with the following requirements. The mailbox may be any color. The carrier signal flag can be any color except any shade of green, brown, white, yellow, or blue. The preferred flag color is fluorescent orange. Also, the flag color must present a clear contrast with the predominant color of the mailbox.

3.11 Mounting

The mailbox shall be provided with a means for convenient and locked mounting that meets all applicable requirements of the Postal Operations Manual. The manufacturer may offer various types of mounting accessories such as a bracket, post, or stand. Although the USPS does not regulate the design of mounting accessories, it is pointed out that no part may project beyond the front of the mounted mailbox. Mounting accessories must not interfere with delivery operations as described in 3.2 or present hazardous features as described in 3.14. See section 6 for additional important information.

3.12 Instructions and Product Information

3.12.1 Assembly and Installation

A complete set of instructions for assembling and mounting the mailbox shall be furnished with each unit. The instructions must include the following conspicuous message: ''CUSTOMERS ARE REQUIRED TO CONTACT THE LOCAL POST OFFICE BEFORE INSTALLING THE MAILBOX TO ENSURE ITS CORRECT PLACEMENT AND HEIGHT AT THE STREET. GENERALLY, MAILBOXES ARE INSTALLED AT A HEIGHT OF 41–45 INCHES FROM THE ROAD SURFACE TO INSIDE FLOOR OF THE MAILBOX OR POINT OF MAIL ENTRY (LOCKED DESIGNS) AND ARE SET BACK 6–8 INCHES FROM FRONT FACE OF CURB OR ROAD EDGE TO THE MAILBOX DOOR.''

3.12.2 Limited Service Mailboxes

The following conspicuous note shall be included with each mailbox: ''THIS IS A LIMITED SERVICE MAILBOX (WITHOUT FLAG) AND IT IS INTENDED ONLY FOR CUSTOMERS WHO DO NOT WANT POSTAL CARRIERS TO PICK UP THEIR OUTGOING MAIL. UNLESS POSTAL CARRIERS HAVE MAIL TO DELIVER, THEY WILL NOT STOP AT LIMITED SERVICE MAILBOXES.''

3.13 Newspaper Receptacles

A receptacle for the delivery of newspapers may be attached to the post of a curbside mailbox, provided no part of the receptacle interferes with the delivery of mail, obstructs the view of the flag, or presents a hazard to the carrier or the carrier's vehicle. The receptacle must not extend beyond the front of the box when the door is closed.

No advertising may be displayed on the outside of the receptacle, except the name of the publication.

3.14 Workmanship

The mailbox shall be properly assembled and utilize the best commercial practice workmanship standards in the fabrication of all components and assemblies. All movable parts shall fit and operate properly with no unintended catch or binding points. The unit must be free from harmful projections or other hazardous devices. The unit must not have any sharp edges, sharp corners, burrs, or other features (on any surfaces) that may be hazardous to carriers/customers, or that may interfere with delivery operations as described in 3.2.

3.15 Testing Requirements

Mailboxes will be subjected to all applicable testing described herein (specific requirements follow). A mailbox that fails to pass any test will be rejected. Testing will be conducted in sequence as listed herein and in Table III.

3.15.1 Capacity

Traditional and Contemporary designs must meet minimum capacity requirements tested by insertion and removal of a standard test gauge which measures 18.50″ long x 5.00″ wide x 6.00″ high. The test gauge is inserted with its 6.00″ dimension aligned in the vertical axis (perpendicular to the mailbox floor). The gauge must be capable of easy insertion and removal and, while inserted, allow for the door(s) to be completely closed without interference. The capacity of Locked designs, which have slots, chutes, or similar features, will be tested and approved based upon whether standard USPS mail sizes (see Table I) can be easily inserted through the mail slot or opening. Retrieval of this mail from the locked compartment shall be equally as easy.

TABLE I.—STANDARD MAIL (LOCKED DESIGNS)

Description	Size (L x H x Thk)
Express and Priority Mail Envelopes.	12½″ x 9½″ x ½″
Priority Mail Box	8⅝″ x 5⅜″ x 1⅝″

3.15.2 Operational Requirements

Carrier service doors, auxiliary doors, door catches/mechanisms, carrier signal flags, and applicable accessory devices must be capable of operating 7,500 normal operating cycles (one cycle=open/close) at room temperature, continuously and correctly, without any failures such as breakage of parts. Testing may be performed either manually or by means of an automated, mechanically driven test fixture which essentially mimics a manual operation. This test is applicable to all mailbox designs.

3.15.3 Water Tightness

A rain test in accordance with UL 771, section 47.7, shall be performed to determine a mailbox's ability to protect mail from water. The rain test shall be operated for a period of 15 minutes for each side. At the conclusion of the test, the outside of the unit is wiped dry and all doors are opened. The inside of the compartment must contain no water other than that produced by high moisture condensation. This test is applicable to all mailbox designs.

3.15.4 Salt Spray Resistance

A salt spray test shall be conducted in accordance with method A5 of ASTM G85, Standard Practice for Modified Salt Spray (Fog) Testing. The salt test shall be operated for 25 continuous cycles with each cycle consisting of one hour of fog and one hour of dry-off. The mailbox shall be tested in a finished condition, including all protective coating, paint, and mounting hardware, and shall be thoroughly washed when submitted to remove all oil, grease, and other nonpermanent coatings. No part of the mailbox may show finish corrosion, blistering, or peeling or other destructive reaction upon conclusion of test. Corrosion is defined as any form of property change such as rust, oxidation, color changes, perforation, accelerated erosion, or disintegration. The buildup of salt deposits on the surface shall not be cause for rejection. However, any corrosion, paint blistering, or paint peeling is cause for rejection. This test is primarily applicable to ferrous metal mailbox designs. It is also valid for mailboxes designs made of plastic, wood, or other materials which use any metal hardware.

3.15.5 Abrasion Resistance

The mailbox's coating/finish shall be tested for resistance to abrasion in accordance with method A of ASTM D968. The rate of sand flow shall be 2 liters of sand in 22 seconds, plus or minus 3 seconds. The mailbox will have failed the sand abrasion test if less than 15 liters of sand penetrates its coating or if less than 75 liters of sand penetrates its plating. This test is applicable to metal mailbox designs only.

3.15.6 Temperature Stress Test

The mailbox under test shall be placed in a cold chamber at −65° Fahrenheit for 24 hours. The chamber shall first be stabilized at the test temperature. After remaining in the −65° environment for the 24-hour period, the unit shall be quickly removed from the cold chamber into room ambient and tested for normal operation. The removal from the chamber and the testing for normal operation shall be accomplished in less than three minutes. The room ambient shall be between 65° and 75° Fahrenheit. Normal operation is defined as operation required and defined by this document. The unit under test shall undergo a similar temperature test, as described above, at a temperature of 140° Fahrenheit. This test is applicable to all mailbox designs.

3.15.7 Structural Rigidity Requirements

Forces of specified magnitude (see Table II) shall be slowly applied at specific points on the mailbox under test (see Figure 6). These forces shall be held for a minimum of one minute and then released. After their release, the deformation caused by the forces shall be measured. If the deformation exceeds the limit specified in Table II, the mailbox under test has failed to meet the structural rigidity requirement. The doors shall remain closed for test positions one through six. The application of the forces at positions one and two shall be applied with the mailbox in its normal upright position, supported by a horizontal board. The application of the forces at positions three, four, and five shall be applied with the mailbox lying on its side (flag side down). The mailbox shall be supported, on the underside, by a flat board that is relieved in the immediate area of the flag mechanism. The application of force at position six (Traditional style flags only) shall be applied with the mailbox lying on its side (flag side up). The application of force at position six shall be repeated at the top of the flag with the mailbox in its normal upright position. If visible cracks in the material have developed as a result of the testing, the mailbox under test has failed to meet the structural rigidity requirement. At the conclusion of the structural rigidity testing, if the mailbox under test fails to operate normally, as defined by this document, the mailbox under test has failed to meet the structural rigidity requirement. This test is applicable to all mailbox designs.

TABLE II.—PERMANENT DEFORMATION LIMITS

Position	Deformation (inches)	Load (pounds)
1	⅛	200
2	⅛	200
3	⅛	50
4	⅛	50
5	⅛	100
6	½	2

3.15.8 Impact Test

Refer to Figure 6 for load positions. Precondition the mailbox for four hours at −20° Fahrenheit. The following testing shall be performed within three minutes of removing the mailbox from the temperature chamber. At both load positions three and four, with the mailbox lying on its side (flag side down) with the door(s) closed, apply an impact load equivalent to a 10-pound weight dropped from a height of 3 feet above the mailbox surface onto a bolster plate having a surface not larger than 2 inches by 2 inches. The mailbox shall be supported, on the underside, by a flat board that is relieved in the immediate area of the flag mechanism. If any noticeable perforation, occurrence of sharp edges, or cracking of the material, either inside or outside the mailbox, develops as a result of the impact, or if the door becomes inoperable or fails to close normally, the mailbox under test has failed to meet the impact resistance requirement. This test is applicable to all mailbox designs.

4 APPLICATION REQUIREMENTS

4.1 Application Requirements

Requests for application materials, and all other correspondence and inquiries, shall be directed to the address in 1.3.2. The application process is described below.

4.1.1 Preliminary Review

Manufacturers must first satisfy requirements of a preliminary review prior to submitting any sample mailboxes or accessories. The preliminary review consists of a review of the manufacturer's conceptual design drawings. Computer-generated drawings are preferred, but hand-drawn sketches are acceptable provided they clearly depict the overall shape and interior size of the proposed mailbox design. Drawings must also include details on design of applicable features such as the carrier service door, latch, handle, flag, floor, and slot. In addition to drawings, proposed accessories shall show or describe intended function. If drawings show that the proposed mailbox design appears to comply with the requirements of this standard, manufacturers will be notified in writing and may then continue with the application requirements described in 4.1.2. Do not submit any sample mailboxes to the USPS prior to complying with the requirements of 4.1.2. Notification that a manufacturer's drawings satisfy the requirements of the preliminary review does not constitute USPS approval of a design and shall not be relied upon as an assurance that a design will be approved.

4.1.2 Testing

Upon receiving written notification from the USPS that their design satisfies requirements of the preliminary review, manufacturers shall at their own expense submit one sample of their mailbox or accessory to an independent laboratory for testing along with a copy of the preliminary review letter from the USPS. See Appendix A for a list of USPS-approved independent test labs. Manufacturers with more than one unique model shall have each one tested independently. Models which are generally of the same size, shape, and material of previously approved designs but have only different decorative features (*i.e.*, color scheme and surface contours) are not considered unique and do not require any testing. Manufacturers seeking approval of models that are not unique shall submit documentation for each model in accordance with section 4.1.3.2. This documentation will be reviewed and the proposed model will be approved or disapproved (see section 5). The USPS may request that the manufacturer submit one sample of the proposed model.

4.1.3 Final Review

Manufacturers shall submit one sample mailbox or accessory to the USPS for final review and approval. The sample shall be accompanied by a certificate of compliance and a copy of the laboratory test results (see 4.1.3.3). Mailboxes submitted to the USPS (see 1.3.2) for final evaluation must be identical in every way with the mailboxes to be marketed and must be marked as specified in 3.8. Manufacturers may be subject to a verification of their quality system prior to approval. This may consist of a review of the manufacturer's quality manual (see 4.1.3.4) and an on-site quality system evaluation (see 3.1).

4.1.3.1 Instructions

Submit a copy of the instructions conforming to 3.12 including the statement concerning locks in 3.6.

4.1.3.2 Documentation

The unit submitted for approval shall be accompanied by one complete set of manufacturing drawings consisting of black-on-white prints (blueprints or sepia are unacceptable). The drawings shall be dated and signed by a manufacturer's representative(s). The drawings must completely document and represent the design of the unit tested. The drawings must include sufficient details to allow the USPS to inspect all materials, construction methods, processes, coatings, treatments, finishes (including paint types and colors), control specifications, parts, and assemblies used in the construction of the unit. Additionally, the drawings must fully describe any purchased materials, components, and hardware, including their respective finishes. The USPS may request individual piece parts to verify drawings.

4.1.3.3 Certification of Compliance and Test Results

Manufacturers shall furnish a written certificate of compliance indicating that their design fully complies with the requirements of this specification. In addition, the manufacturer shall submit the lab's original report which clearly shows results of each test conducted (see Table III). The manufacturer bears all responsibility for their unit(s) meeting these requirements and the USPS reserves the right to retest any and all units submitted, including those which are available to the general public.

TABLE III.—TEST REQUIREMENTS

Test	Requirement	Reference	Applicable document
Capacity	Insertion of test gauge	3.15.1	
Operational Requirements	7,500 cycles	3.15.2	
Water Tightness	No appreciable moisture	3.15.3	UL 771, Section 47.7.
Salt Spray Resistance	25 cycles	3.15.4	ASTM G85.
Abrasion Resistance	75 liters	3.15.5	ASTM D968.

TABLE III.—TEST REQUIREMENTS—Continued

Test	Requirement	Reference	Applicable document
Temperature Stress Test	Shall function between −65 °F and 140 °F	3.15.6	
Structural Rigidity Requirements	Refer to Table I for loads and points, maximum ⅛ inch permanent deformation.	3.15.7	
Impact Test	10 lbs. dropped from 3 feet	3.15.8	

4.1.3.4 Quality Assurance Manual

The manufacturer shall submit its quality policy manual. The manual should be structured in accordance with ISO 10013 and with the requirements of ISO 9002.

5 APPROVAL OR DISAPPROVAL

5.1 Disapproval

Written notification, including reasons for disapproval, will be sent to the manufacturer within 30 days of completion of the final review of all submitted units. All correspondence and inquiries shall be directed to the address listed in 1.3.2.

5.1.1 Disapproved Mailboxes

Mailboxes disapproved will be disposed of in 30 calendar days from the date of the written notification of disapproval, or returned to the manufacturer if requested, provided the manufacturer pays shipping costs.

5.2 Approval

One set of manufacturing drawings with written notification of approval will be returned to the manufacturer. The drawings will be stamped and identified as representing each unit.

5.2.1 Approved Mailboxes

Mailboxes that are approved will be retained by the USPS.

5.2.2 Production Units

Manufacturer's production units shall be constructed in accordance with the identified (stamped) drawings and provisions of this specification and be of the same materials, construction, coating, workmanship, finish, etc. as the approved units. Within 60 days upon sale of their approved mailbox to the public, manufacturers shall submit one production unit to the USPS office listed in 1.3.2. The USPS reserves the right at any time to examine and retest units obtained either in the general marketplace or from the manufacturer. If the USPS determines that a particular mailbox model is not in compliance with this standard, USPS may suspend or rescind approval as follows.

5.2.2.1 The USPS will provide written notice to the manufacturer that a particular mailbox model is not in compliance with this standard. This notice will state specific reason(s) why the product is no longer considered in compliance. It will be sent registered mail with the manufacturer's receipt of notice documented.

5.2.2.2 The manufacturer must then respond to the USPS within 30 days with a reasonable and timely corrective plan of action to bring the mailbox model back into compliance. During the interim, production of the mailbox shall cease and any existing inventory shall be destroyed.

5.2.2.3 The USPS will then respond within 14 days whether the submitted corrective plan of action is accepted or rejected, with reason noted.

5.2.2.4 The USPS will proceed to monitor the manufacturer's compliance with their corrective plan of action.

5.2.2.5 The corrected mailbox model is sent to the USPS for re-approval within the corrective plan of action's time frame.

5.2.2.6 The USPS will respond within 30 days whether the corrected model is again in compliance with this standard. If the model is found to be out of compliance, the USPS will rescind its approval. Consequently, the manufacturer will have to follow application requirements outlined in section 4 to regain approval of the model.

5.2.3 Revisions, Product or Drawings

Changes which affect the form, fit, or function (*i.e.,* dimensions, material, finish) of approved products or drawings shall not be made without written approval from the USPS. Any proposed changes shall be submitted with the affected documentation, reflecting the changes (including a notation in the revision area) and a written explanation of the changes. One unit, incorporating the changes, may be required to be resubmitted for testing and evaluation for approval.

5.2.3.1 Revisions, Manufacturer Structure

If any substantive part of the approved manufacturer's structure changes from what existed when the manufacturer became approved, the manufacturer shall notify the USPS and may be subject to a re-evaluation of product or quality system. Examples of substantive structural changes are: change in executive or quality management, major change in quality policy or procedures, relocation of manufacturing facilities, major equipment or manufacturing process change (*e.g.,* outsourcing versus in-plant fabrication), etc. Notification of such changes will be to the address in 1.3.2.

5.2.4 Product Brochure

Within 60 days upon sale to public, manufacturers shall submit one copy of their product(s) brochure(s) representing approved mailbox design(s) to the address listed in 1.3.2, and to: USPS, Delivery Policy and Programs, 475 L'Enfant Plaza, Rm. 7142, Washington, DC 20260–0004.

6 Notes

6.1 Mailboxes intended to be used in delivery to customer's doors are not currently ''approved'' by the United States Postal Service as referenced in this standard. However, it is recommended that these boxes conform to the intentions of this specification, particularly the safety of the carrier and customer and the protection of the mail. The local postmaster shall be contacted prior to installation and use of any door mailbox.

6.2 The United States Postal Service does not approve mailbox posts or regulate mounting of mailboxes other than the requirements specified in sections 3.11 and 3.12. Please note that mailbox posts are often subject to local restrictions, state laws, and federal highway regulations. Further information may be obtained from:

American Association of State Highway and Transportation Officials, 444 N Capitol St NW, Ste 249, Washington, DC 20001–1512

Federal Highway Administration Office of Highway Safety HHS 10, 400 7th St SW, Washington, DC 20590–0003

BILLING CODE 7710–12–P

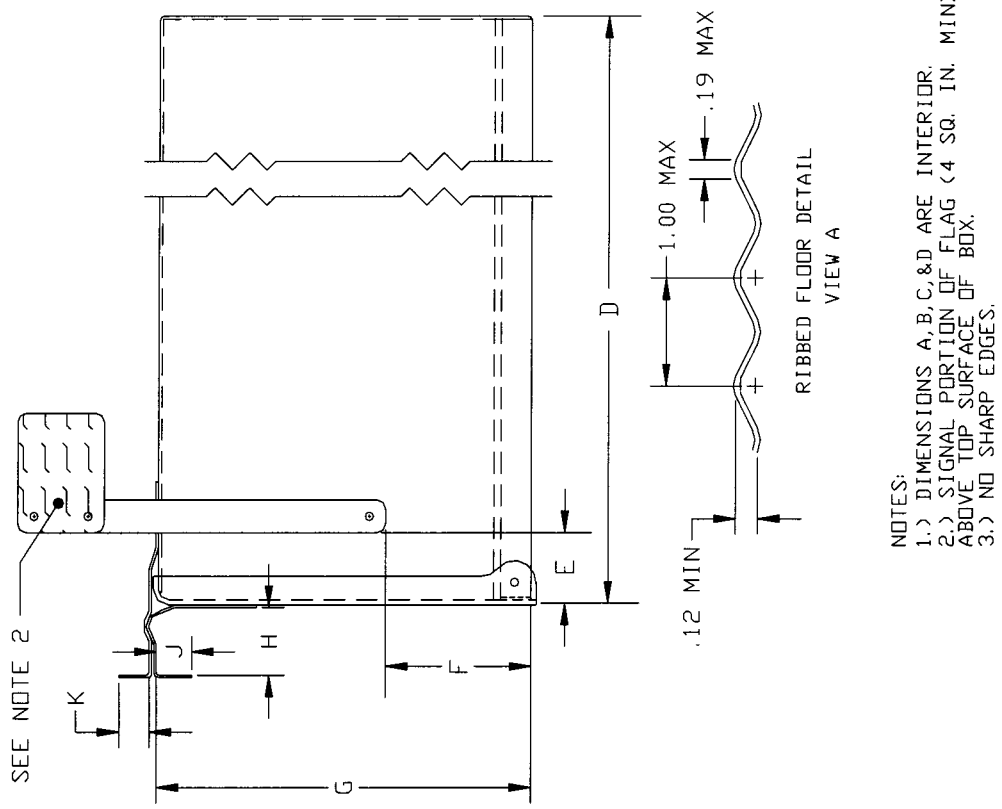

NOTES:
1.) DIMENSIONS A,B,C,&D ARE INTERIOR.
2.) SIGNAL PORTION OF FLAG (4 SQ. IN. MIN) ABOVE TOP SURFACE OF BOX.
3.) NO SHARP EDGES.

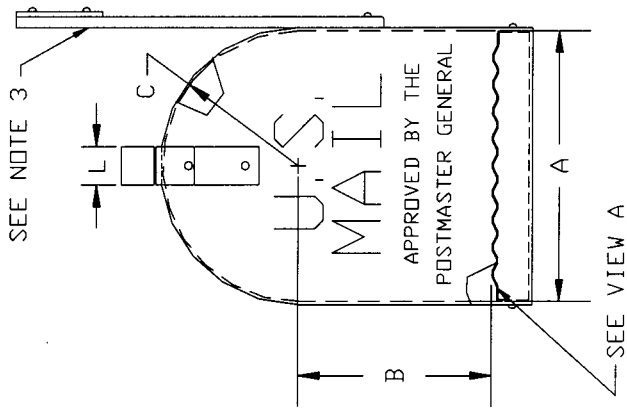

DIM	MIN	MAX	DIM	MIN	MAX
A	6.25	11.00	G	6.00	15.00
B	4.50	8.25	H	1.00	2.12
C	3.12R	5.50R	J	1.00	2.00
D	18.56	22.81	K	.50	.87
E	–	2.00	L	.87	1.25
F	3.75	8.50			

UNITS: INCHES

TRADITIONAL MAILBOX
FIGURE 1

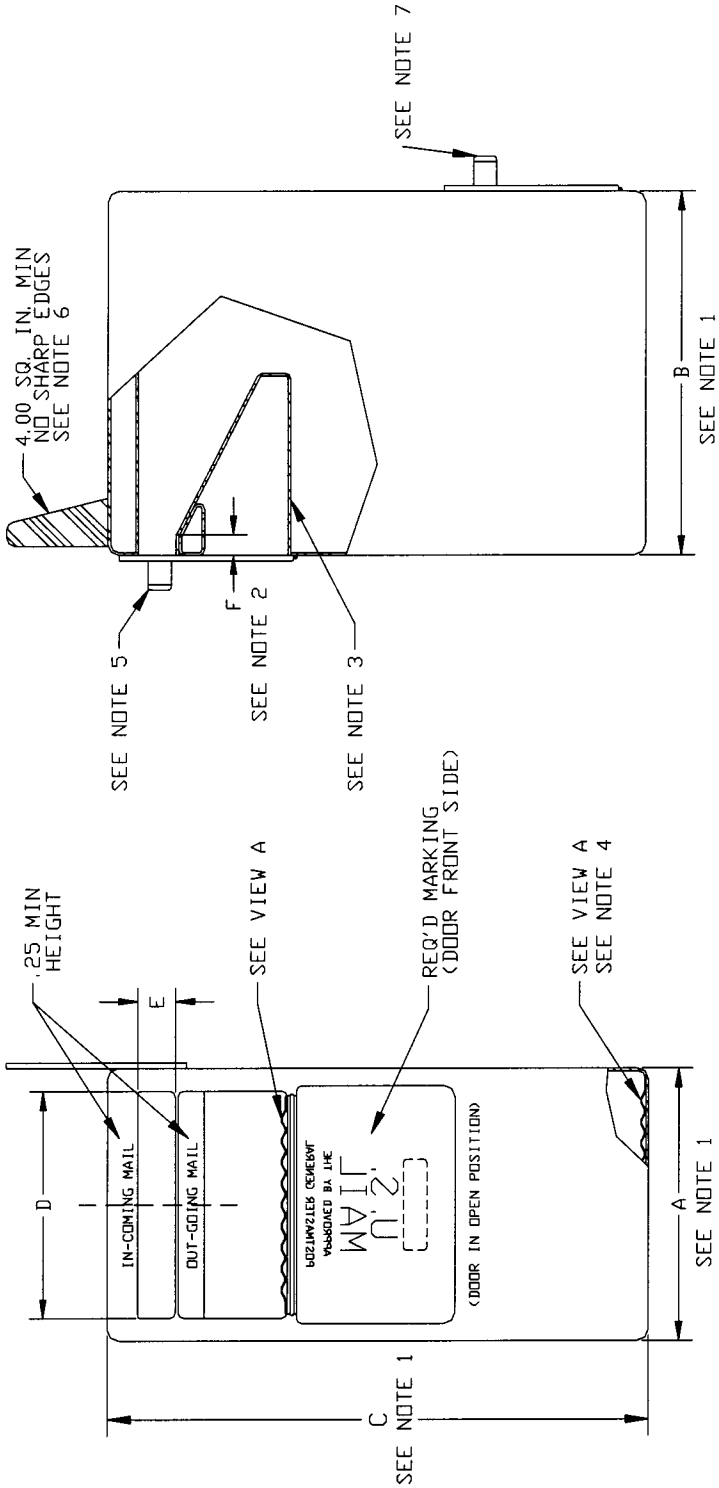

NOTES:

1.) DIMENSIONS A, B, & C DETERMINED BY MANUFACTURER, BUT MUST PASS CAPACITY TEST.

2.) MAXIMUM SET-BACK FOR SLOT IS 2.00" WHEN MEASURED FROM FRONT WALL OF THE MAILBOX.

3.) COMPARTMENT MUST BE LARGE ENOUGH TO ACCOMMODATE SEVERAL 9.50"L X 4.25"H LETTERS. LETTERS CAN BE PLACED ON BACKSIDE OF THE CARRIER SERVICE DOOR ELIMINATING NEED FOR AN OUT-GOING MAIL COMPARTMENT PROVIDED MAIL DOES NOT FALL OUT WHEN DOOR IS OPENED.

4.) A MAT INSERT AND OTHER FORMING TECHNIQUES ARE ACCEPTABLE.

5.) HANDLE SHALL BE POSITIONED WITHIN TOP 1/3 OF CARRIER SERVICE DOOR AND PROVIDE 1.25" MINIMUM FINGER CLEARANCE.

6.) FRONT EDGE OF FLAG MUST NOT BE SET BACK MORE THAN 2.00" WHEN MEASURED FROM FRONT WALL OF MAILBOX.

7.) OPTIONAL LOCATION OF CUSTOMER ACCESS DOOR.

DIM	MIN	MAX
A	-	-
B	-	-
C	-	-
D	10.00	-
E	1.75	-
F	-	2.00

UNITS: INCHES

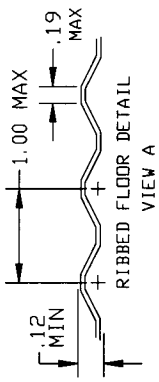

LOCKED MAILBOX (FULL SERVICE)

FIGURE 2

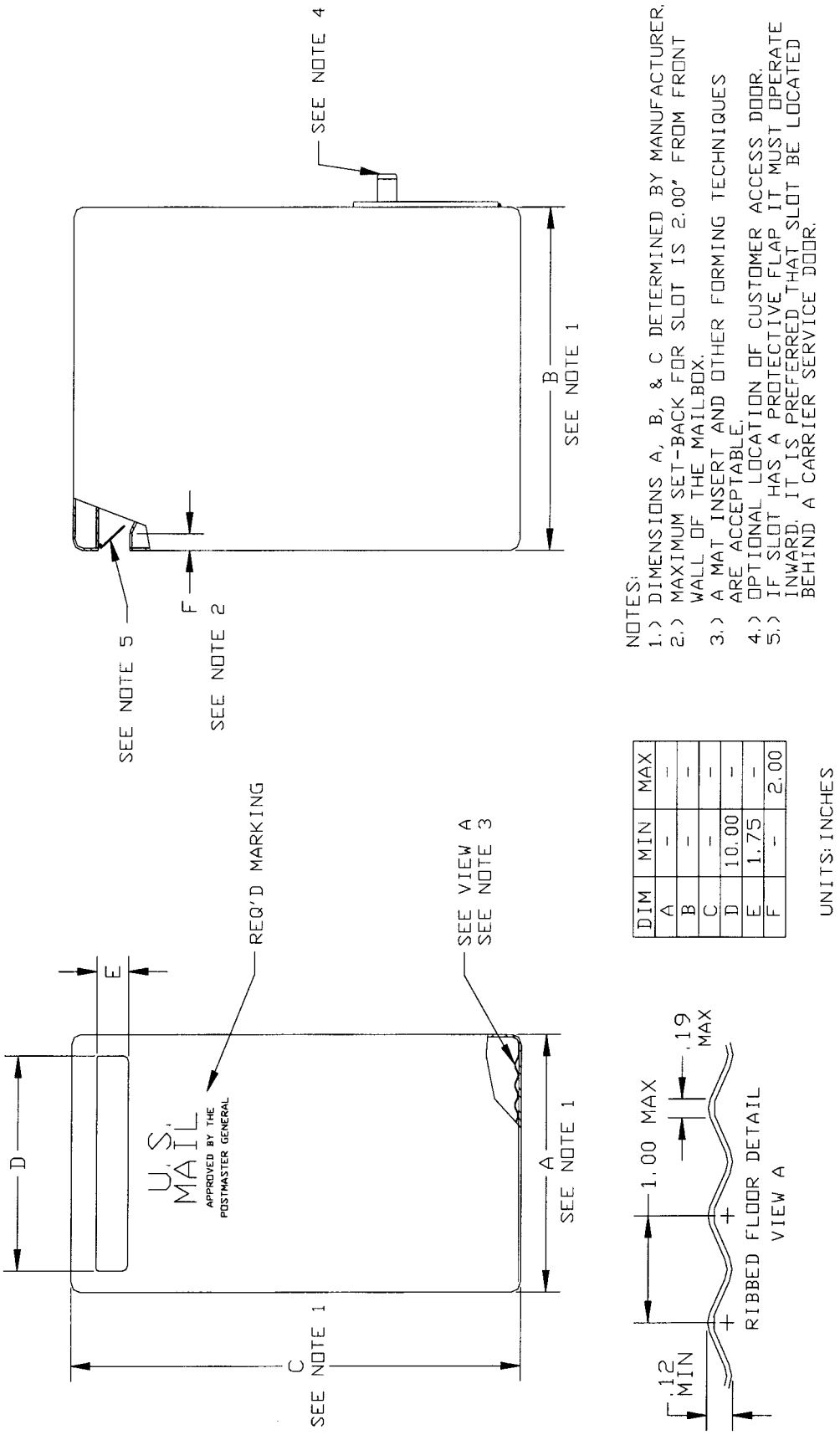

NOTES:

1.) DIMENSIONS A, B, & C DETERMINED BY MANUFACTURER.
2.) MAXIMUM SET-BACK FOR SLOT IS 2.00" FROM FRONT WALL OF THE MAILBOX.
3.) A MAT INSERT AND OTHER FORMING TECHNIQUES ARE ACCEPTABLE.
4.) OPTIONAL LOCATION OF CUSTOMER ACCESS DOOR.
5.) IF SLOT HAS A PROTECTIVE FLAP IT MUST OPERATE INWARD. IT IS PREFERRED THAT SLOT BE LOCATED BEHIND A CARRIER SERVICE DOOR.

DIM	MIN	MAX
A	-	-
B	-	-
C	-	-
D	10.00	-
E	1.75	-
F	-	2.00

UNITS: INCHES

LOCKED MAILBOX (LIMITED SERVICE)
FIGURE 3

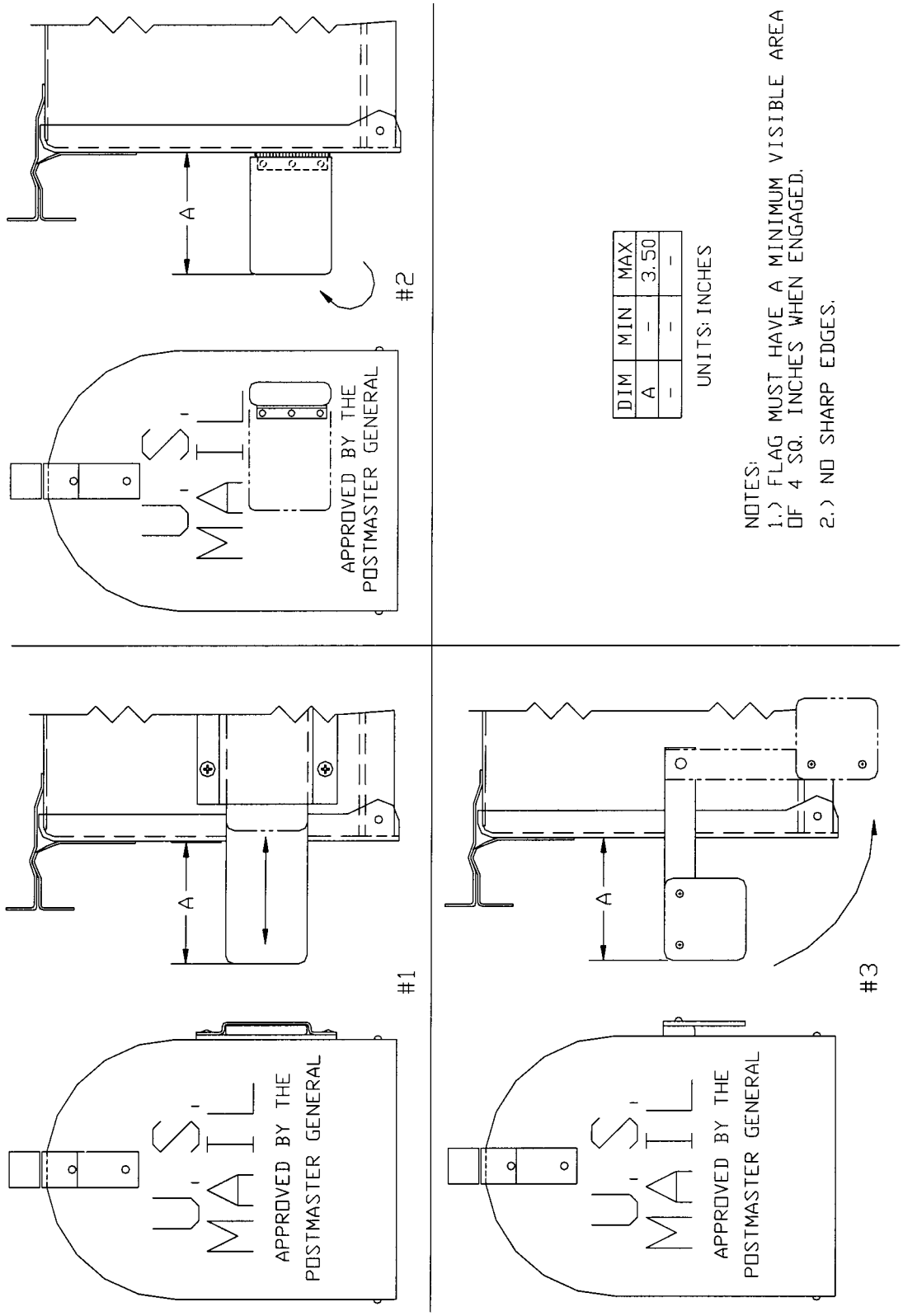

DIM	MIN	MAX
A	–	3.50
–	–	–

UNITS: INCHES

NOTES:
1.) FLAG MUST HAVE A MINIMUM VISIBLE AREA OF 4 SQ. INCHES WHEN ENGAGED.
2.) NO SHARP EDGES.

ALTERNATIVE FLAG DESIGNS
FIGURE 4

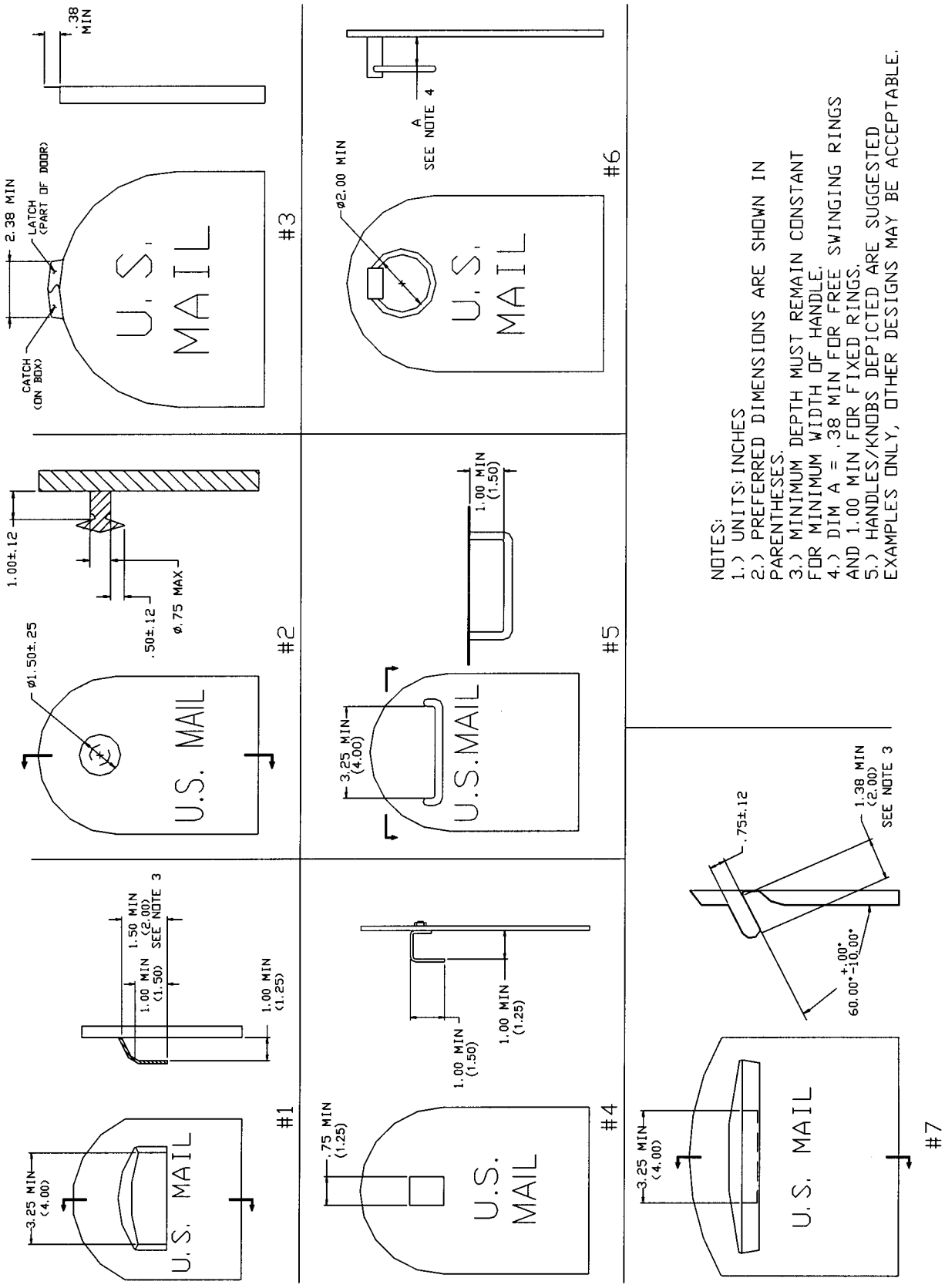

HANDLE/KNOB DESIGNS
FIGURE 5

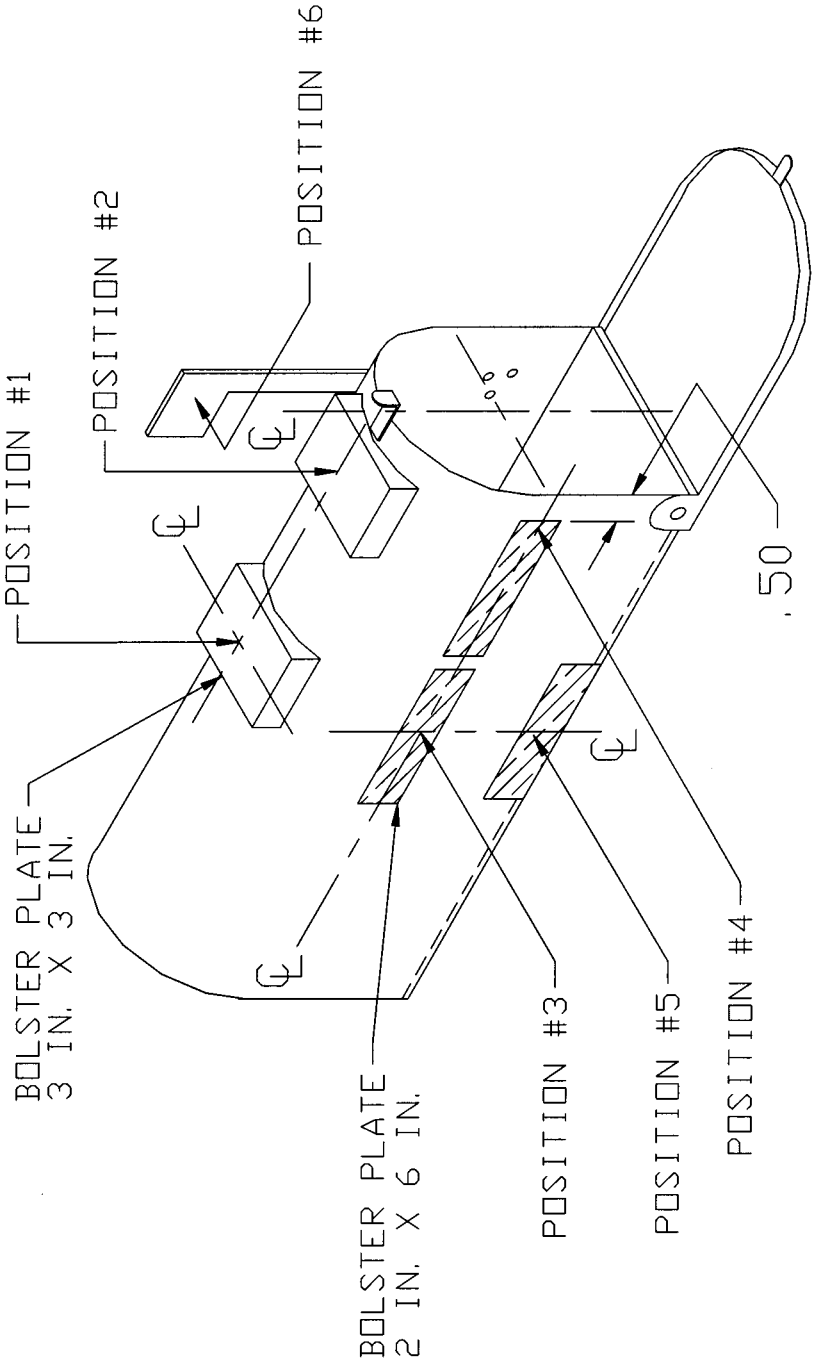

DIRECTION OF LOADS
FIGURE 6

BILLING CODE 7710–12–C

Appendix A—USPS-Approved Independent Test Laboratories

(1) ACTS Test Labs, 100 Northpointe Parkway, Buffalo, NY 14228–1884, Contact: Dennis Maclaughlin, Phone: 716–505–3547 Fax: 716–505–3301.

(2) The Coatings Lab, 10175 Harwin Drive, Suite 110, Houston, TX 77036, Contact: Tom Schwerdt, Phone: 713–981–9368 Fax: 713–776–9634.

(3) Ithaca Materials Research and Testing, Inc. (IMR), Lansing Business and Technology Park, 31 Woodsedge Drive, Lansing, NY 14882, Contact: Jeff Zerilli, Vice President, Phone: 607–533–7000.

(4) Independent Test Laboratories, Inc., 1127B Baker Street, Costa Mesa, CA 92626, Contact: Robet Bouvier, Phone: 800–962–Test Fax: 714–641–3836.

(5) Environ Labs L.L.C., 9725 Girard Ave S., Minneapolis, MN 55431, Contact: Chuck Mapes, Phone: 800–826–3710 Fax: 612–888–6345.

(6) Midwest Testing Laboratories, Inc., 1072 Wheaton, Troy, MI 48083, Contact: Cherie Ulatowski, Phone: 248–689–9262 Fax: 248–689–7637.

Note: Additional test laboratories may be added provided they satisfy USPS certification criteria. Interested laboratories should contact: USPS Engineering, Test Evaluation and Quality, 8403 Lee Hwy, Merrifield, VA 22082–8101.

Stanley F. Mires,

Chief Counsel, Legislative.

[FR Doc. 00–27913 Filed 10–31–00; 8:45 am]

BILLING CODE 7710–12–P

DEPARTMENT OF THE INTERIOR

Fish and Wildlife Service

50 CFR Part 17

Endangered and Threatened Wildlife and Plants; 90-Day Finding for a Petition To Delist the Woodland Caribou

AGENCY: Fish and Wildlife Service, Interior.

ACTION: Notice of 90-day petition finding.

SUMMARY: We, the U.S. Fish and Wildlife Service (Service), announce a 90-day finding on a petition to remove the woodland caribou (*Rangifer tarandus caribou*) from the Federal list of endangered species pursuant to the Endangered Species Act of 1973, as amended (Act). We find that the petition did not present substantial scientific or commercial information indicating that delisting of the woodland caribou may be warranted.

DATES: The finding announced in this document was made on October 13, 2000.

ADDRESSES: Data, information, comments, or questions concerning this petition should be submitted to the Field Supervisor, Upper Columbia River Basin Field Office, U.S. Fish and Wildlife Service, 11103 E. Montgomery Drive, Spokane, Washington 99206. The petition finding, supporting data, and comments are available for public inspection, by appointment, during normal business hours at the above address.

FOR FURTHER INFORMATION CONTACT: Susan Martin, Supervisor, Upper Columbia River Basin Office, at the above address (telephone 509/891–6839; facsimile 509/891–6748).

SUPPLEMENTARY INFORMATION:

Background

Section 4(b)(3)(A) of the Act (16 U.S.C. 1531 *et seq.*) requires that we make a finding on whether a petition to list, delist, or reclassify a species presents substantial information indicating that the petitioned action may be warranted. We base the finding on information submitted with, and referenced in, the petition and all other information available to us at the time we make the finding. To the maximum extent practicable, this finding is to be made within 90 days of the receipt of the petition, and the finding is to be published promptly in the **Federal Register**. If we find that substantial information supports the petitioned action, section 4(b)(3)(B) of the Act requires us to promptly commence a review of the status of the species and to disclose our findings within 12 months.

On May 27, 1998, we received a petition dated May 22, 1998, to delist the endangered population of woodland caribou (*Rangifer tarandus caribou*), which is located in the Selkirk Mountains of northeast Washington, northern Idaho, and southeast British Columbia, Canada. The petition was submitted by Peter B. Wilson, representing the Greater Bonners Ferry Chamber of Commerce, Bonners Ferry, Idaho.

In a letter dated June 12, 1998, we notified the petitioner that a finding on their petition would be delayed due to a backlog of higher priority listing activities. This backlog resulted from a moratorium on listing activities enacted by Congress in 1995 and a subsequent series of inadequate budgets for listing activities. We now use funding for recovery activities to support work on findings for delisting petitions, and, therefore, we were able to proceed with this finding.

The petitioner made a number of assertions in the petition, but the main points were—(1) our determination to list and maintain the listing of the caribou is based solely on conjecture and inadequate research, and no biological reason or need for the listing has been established by research and conclusion; (2) there is no significant biological distinction between the mountain and woodland caribou, and, since there are numerous ''woodland'' caribou in Canada, their listing in the United States is not warranted (also, the petitioner contends there is a problem with mixing mountain and woodland caribou within the Selkirk population); (3) the petitioner has several concerns regarding the historical and current range of the woodland caribou and whether or not caribou ever inhabited the conterminous United States, including Idaho; (4) no environmental impact statement was prepared for the listing; (5) caribou mortalities within this population have been high; and (6) old growth forest has not been established as a requirement for caribou habitat.

We have reviewed the petition and other documentation to determine if substantial information has been presented to indicate that the requested action may be warranted. The factors for listing, delisting, or reclassifying species are described at 50 CFR 424.11. We may delist a species only, after conducting a review of the species status, if the best scientific and commercial data available substantiate that it is neither endangered nor threatened. Delisting may be warranted as a result of—(1) extinction, (2) recovery, or (3) a determination that the original data used for classification of the species as endangered or threatened were in error.

Our determination to list the woodland caribou was made on the basis of the best scientific and commercial data available (49 FR 7390; February 29, 1984). The petition's assertion that the listing of the woodland caribou is based solely on conjecture comes from the petitioner's interpretation of our revised Recovery Plan for Woodland Caribou in the Selkirk Mountains (Recovery Plan). The Recovery Plan stated a number of unknowns about caribou biology, population factors, and habitat variables. These statements were made in the context of gathering the information needed to support recovery actions. Though it is true there is much to learn about the caribou, at the time of listing, we had enough information to warrant the listing of the species, including substantial information on habitat fragmentation, poaching, and a genetic bottleneck.

Regarding the issue of ''woodland'' versus ''mountain'' caribou, woodland caribou occur in two distinct ecotypes (a locally adapted population of a widespread species): The northern ecotype and the mountain ecotype. In woodland caribou, ecotypic differentiation is based on habitat use and behavior patterns. The endangered Selkirk population is the mountain ecotype. Both ecotypes are within the same subspecies; there is no genetic distinction between caribou inhabiting the northern ecotype and those inhabiting the mountain ecotype (Service 1994).

Historically, woodland caribou were distributed across the northeastern, northcentral, and northwestern conterminous United States (Fashingbauer 1965, cited in Service 1994; McCollough 1991). It is well-documented that the species' range was once more extensive than it is today. Caribou once occurred as far south as the Salmon River in Idaho and as far east as the North Fork of the Flathead River in Montana (Evans 1960). Before 1910, they occupied the Selkirk, Cabinet, Purcell, and Bitterroot Mountains (Evans 1960; Layser 1974). By the 1950's, caribou were reduced to about 100 animals occupying about 2,590 square kilometers (1,000 square miles) in the Selkirk Mountains, with remnant bands in the Cabinet and Yaak Mountains (Flinn 1956; Evans 1960). Although by 1983 the distribution of the

Selkirk Mountains woodland caribou population centered around Stagleap Provincial Park several miles north of the border in British Columbia, caribou inhabited the U.S. portion of the Selkirk Ecosystem as well, and continue to do so today.

At the time of listing, we did not distinguish the caribou population by State. Caribou movement within home ranges may cross State boundaries, and the listing decision was based on the species' status within the United States. According to section 3(15) of the Act, ''species'' can include ''any distinct population segment of any species of vertebrate fish or wildlife which interbreeds when mature.'' We listed the woodland caribou as a distinct vertebrate population segment limited to Idaho, Washington, and that part of southeast British Columbia, Canada, bounded by the United States-Canadian border, Columbia River, Kootenay River, and Kootenay Lake. The Selkirk Mountain population of woodland caribou was listed because its range and distribution within the conterminous United States had undergone a significant decline and the species was being affected by a variety of ongoing threats.

We did not prepare an environmental impact statement at the time of listing the woodland caribou. As stated in the final rule listing the woodland caribou published in the **Federal Register** on October 25, 1983 (48 FR 49244), we determined that environmental assessments and environmental impact statements need not be prepared in connection with regulations adopted pursuant to section 4 of the Act. Regulations addressing the listing of endangered and threatened species (50 CFR 424.11) state that listing, reclassification, and delisting decisions are to be based solely on the basis of the best scientific and commercial information regarding species status, without reference to possible economic or other impacts of such determination.

The petitioners are correct in that the woodland caribou population has experienced significant mortalities due to a number of factors. The population, which consisted of an estimated 25–30 animals when it was listed in 1984, has been augmented with a total of 103 animals over an 11-year period between 1987 and 1998. In 1998, the population consisted of an estimated 44 animals (includes animals recruited into the population through reproduction). Fifty-nine of the transplanted caribou died over this 11-year period, and the fate of 21 others is unknown due to radio-collar loss or failure. However, while this speaks to the difficulty and critical nature of the recovery program, it does not provide a reason to delist the caribou.

Seasonal habitat use patterns and forage requirements by woodland caribou have been documented by research in northern Idaho and British Columbia. Occasionally, caribou have been observed feeding on succulent, newly emerging vegetation in clearcuts in the spring. However, data show that, even during spring, caribou preferentially use old-growth and mature forest habitats as a source of forage (Wakkinen *et al.* 1992). As to use of old-growth during other seasons of the year, caribou nearly exclusively use old-growth forest during early winter through late spring (Scott and Servheen 1984).

When evaluating petitions for delisting of species under the Act, our guidelines state that a ''not-substantial information'' finding be made when a petition to delist a species presents no new information indicating the original data for listing the species may be in error (Service and National Marine Fisheries Service 1996). We have reviewed the petition and other available literature. We conclude the petition does not present substantial information to indicate that the original data for listing the species was in error, or that delisting the Selkirk Mountains woodland caribou may be warranted. Furthermore, the species has not met the recovery objectives identified in the 1994 Recovery Plan, which calls for an increasing population and secure habitat.

References Cited

Evans, H.F. 1960. A preliminary investigation of caribou in northwestern United States. Masters Thesis, University of Montana, Missoula, Montana. 145 pp.

Flinn, P. 1956. Caribou of Idaho. Unpublished report, Idaho Department of Fish and Game, Boise, Idaho. 57 pp. + attachments

Layser, E.F. 1974. A review of the mountain caribou of northeastern Washington and adjacent northern Idaho. Journal of the Idaho Academy of Science, Special Research Issue No. 3, 63 pp.

McCollough, M. 1991. Final Report—Maine caribou project 1986–1990. University of Maine, Orono, Maine. 13 pp. and 24 pp.

Scott, M. and G. Servheen. 1984. Caribou ecology. Unpublished report. Idaho Department of Fish and Game. Boise, Idaho. 78 pp.

U.S. Fish and Wildlife Service. 1994. Selkirk Mountain woodland caribou recovery plan. Portland, Oregon. 63 pp.

U.S. Fish and Wildlife Service and National Marine Fisheries Service. 1996. Endangered species petition management guidance. Washington, D.C. 20 pp. + appendices

Wakkinen, W.L., B. Compton, and P. Zager. 1992. Selkirk Mountain caribou transplant. Unpublished report. Idaho Department of Fish and Game, Boise, Idaho. Pages i, iii, 16–18

Author

The primary author of this document is Suzanne Audet, Fish and Wildlife Service, Upper Columbia River Basin Office (see **ADDRESSES** section).

Authority

The authority for this action is the Endangered Species Act (16 U.S.C. 1531 *et seq.*).

Dated: October 13, 2000.

Jamie Rappaport Clark,

Director, Fish and Wildlife Service.

[FR Doc. 00–27232 Filed 10–31–00; 8:45 am]

BILLING CODE 4310–55–P

Notices

Federal Register

Vol. 65, No. 212

Wednesday, November 1, 2000

This section of the FEDERAL REGISTER contains documents other than rules or proposed rules that are applicable to the public. Notices of hearings and investigations, committee meetings, agency decisions and rulings, delegations of authority, filing of petitions and applications and agency statements of organization and functions are examples of documents appearing in this section.

DEPARTMENT OF AGRICULTURE

Animal and Plant Health Inspection Service

[Docket No. 00–100–1]

Notice of Request for Extension of Approval of an Information Collection

AGENCY: Animal and Plant Health Inspection Service, USDA.

ACTION: Extension of approval of an information collection; comment request.

SUMMARY: In accordance with the Paperwork Reduction Act of 1995, this notice announces the Animal and Plant Health Inspection Service's intention to request an extension of approval of an information collection in support of our seed analysis program with Canada.

DATES: We invite you to comment on this docket. We will consider all comments that we receive by January 2, 2001.

ADDRESSES: Please send your comment and three copies to: Docket No. 00–100–1, Regulatory Analysis and Development, PPD, APHIS, Suite 3C03, 4700 River Road, Unit 118, Riverdale, MD 20737–1238.

Please state that your comment refers to Docket No. 00–100–1.

You may read any comments that we receive on this docket in our reading room. The reading room is located in room 1141 of the USDA South Building, 14th Street and Independence Avenue, SW., Washington, DC. Normal reading room hours are 8 a.m. to 4:30 p.m., Monday through Friday, except holidays. To be sure someone is there to help you, please call (202) 690–2817 before coming.

APHIS documents published in the **Federal Register**, and related information, including the names of organizations and individuals who have commented on APHIS dockets, are available on the Internet at http://www.aphis.usda.gov/ppd/rad/webrepor.html.

FOR FURTHER INFORMATION CONTACT: For information regarding the importation and interstate movement of foreign agricultural and vegetable seeds, contact Ms. Polly Lehtonen, Botanist, Permits and Risk Assessments, PPQ, APHIS, 4700 River Road Unit 133, Riverdale, MD 20737–1236; (301) 734–4394. For copies of more detailed information on the information collection, contact Mrs. Celeste Sickles, APHIS' Information Collection Coordinator, at (301) 734–7477.

SUPPLEMENTARY INFORMATION:

Title: Imported Seed and Screenings.

OMB Number: 0579–0124.

Expiration Date of Approval: November 30, 2000.

Type of Request: Extension of approval of an information collection.

Abstract: The United States Department of Agriculture (USDA) is responsible for preventing foreign plant pests from entering the United States, preventing the spread of pests not widely distributed within the United States, and eradicating those pests when eradication is feasible. The Plant Protection Act (PPA) authorizes the Department to carry out this mission.

The Plant Protection and Quarantine (PPQ) division of USDA's Animal and Plant Health Inspection Service (APHIS) is responsible for implementing the regulations that carry out the PPA.

Under the authority of the Federal Seed Act of 1939 (FSA), as amended, the USDA regulates the importation and interstate movement of certain agricultural and vegetable seeds.

Specifically, our regulations are designed to implement Title III of the FSA, ''Foreign Commerce,'' which requires shipments of imported agricultural and vegetable seeds to be labeled correctly and to be tested for the presence of noxious weeds as a condition of entry into the United States.

Under the authority of the FSA, we have established a seed analysis program with Canada that allows U.S. companies that import seed for cleaning or processing to enter into compliance agreements with us (APHIS). This program eliminates the need for sampling shipments of Canadian-origin seed at the border and allows certain seed importers to clean seed without the direct supervision of an APHIS inspector. In this way, the importation of Canadian-origin seeds into the United States is safely expedited without compromising the precautions we take to ensure that imported seeds do not pose a health threat to U.S. agriculture.

Our seed analysis program entails the use of several information collection activities, including requirements for a declaration of importation, container labeling, notification of seed location, a seed return request, seed analysis certificates, seed identity maintenance, and associated recordkeeping.

We are asking the Office of Management and Budget (OMB) to approve, for an additional 3 years, our use of these information collection activities in connection with our seed analysis program.

The purpose of this notice is to solicit comments from the public (as well as affected agencies) concerning this information collection activity. These comments will help us:

(1) Evaluate whether the information collection is necessary for the proper performance of our Agency's functions, including whether the information will have practical utility;

(2) Evaluate the accuracy of our estimate of the burden of the information collection, including the validity of the methodology and assumptions used;

(3) Enhance the quality, utility, and clarity of the information to be collected; and

(4) Minimize the burden of the collection of information on those who are to respond, through use, as appropriate, of automated, electronic, mechanical, and other collection technologies, *e.g.,* permitting electronic submission of responses.

Estimate of burden: The public reporting burden for this collection of information is estimated to average 15 minutes per response.

Respondents: Importers of Canadian seeds, seed cleaning/processing facility personnel, and Agri-Food Canada officials.

Estimated annual number of respondents: 1,200.

Estimated annual number of responses per respondent: 25.

Estimated annual number of responses: 30,000.

Estimated total annual burden on respondents: 11,555 hours. (Due to rounding, the total annual burden hours

may not equal the product of the annual number of responses multiplied by the average reporting burden per response.)

All responses to this notice will be summarized and included in the request for OMB approval. All comments will also become a matter of public record.

Done in Washington, DC, this 27th day of October 2000.

Bobby R. Acord,

Acting Administrator, Animal and Plant Health Inspection Service.

[FR Doc. 00–28006 Filed 10–31–00; 8:45 am]

BILLING CODE 3410–34–U

DEPARTMENT OF AGRICULTURE

Farm Service Agency

National Drought Council

AGENCY: Farm Service Agency, USDA.

ACTION: Notice of interim meeting.

SUMMARY: The National Drought Policy Commission recommended that a National Drought Council (Council) be established to coordinate activities between and among Federal Agencies, States, local governments, tribes and others. The Council was established through a Memorandum of Understanding (MOU). The first meeting of the Council will be held November 9, 2000. All meetings are open to the public; however, seating is limited and available on a first-come basis.

DATES: The Council will meet on November 9, 2000, from 9:00 a.m. to 11:30 a.m. in Room 221–A, Jamie L. Whitten Building, 12th and Jefferson Drive, SW, Washington, D.C. and from 12:30 to 3:30 p.m. in Room 4960–S of the United States Department of Agriculture South Building at 1400 Independence Avenue, SW, Washington, D.C. All times noted are Eastern Standard Time. The first part of the meeting will be devoted to the organization of the Council. The remainder of the meeting will be dedicated to establishing a work plan and other Council business.

FOR FURTHER INFORMATION CONTACT: Leona Dittus, Executive Director, Interim National Drought Council, United States Department of Agriculture (USDA), 1400 Independence Avenue, SW, Room 6701–S, Stop 0501, Washington, D.C., 20250–0501 or telephone (202) 720–3168; FAX (202) 720–9688; internet *leona.dittus@usda.gov.*

SUPPLEMENTARY INFORMATION: The purpose of the MOU is to establish a more comprehensive, integrated, coordinated approach toward reducing the impacts of drought through better preparedness, monitoring and prediction, risk management, and response to drought emergencies in the United States. The Council will encourage cooperation and coordination between and among Federal, State, local, and tribal governments and others, relative to preparation for and response to serious drought emergencies. The Council is not a source of consensus advice and therefore is not subject to the Federal Advisory Committee Act. Activities of the Council include providing coordination to: (a) resolve drought related issues, (b) exchange information about lessons learned, and (c) improve public awareness of the need for drought planning and mitigation measures. The Council will be co-chaired by the Secretary of Agriculture or his designee, and a non-Federal co-chair shall be selected from among the members who are not Federal officers or employees. Administrative staff support essential to the execution of the Council's responsibilities shall be provided by USDA. The Council will continue in effect for 5 years or until Congress establishes a permanent National Drought Council.

If special accommodations are required, please contact Leona Dittus, at the address specified above, by COB November 7, 2000.

Signed at Washington, DC on October 26, 2000.

George Arredondo,

Administrator, Farm Service Agency.

[FR Doc. 00–27988 Filed 10–31–00; 8:45 am]

BILLING CODE 3410–05–P

DEPARTMENT OF AGRICULTURE

Forest Service

Revised Land and Resource Management Plan for the Hoosier National Forest; Brown, Crawford, Dubois, Jackson, Lawrence, Martin, Monroe, Orange, and Perry Counties, Indiana

AGENCY: Forest Service, USDA.

ACTION: Notice of Intent to prepare environmental impact statement (EIS).

SUMMARY: The USDA Forest Service intends to prepare an environmental impact statement for revising the Hoosier National Forest Land and Resource Management Plan (Forest Plan) pursuant to 16 U.S.C. 1604(f)(5) and USDA Forest Service National Forest System Land and Resource Management Planning regulations. The revised Forest Plan will supersede the current Forest Plan, which the regional forester approved September 17, 1985, and has been amended 4 times. This notice describes the focus areas of change, the estimated dates for filing the EIS, the information concerning public participation, and the names and addresses of the responsible agency official and the individual who can provide additional information.

DATES: We need to receive your comments on this Notice of Intent in writing by January 31, 2001. The Draft EIS should be available for public review by December 2003. The Final EIS and revised Forest Plan should be completed by December 2004.

ADDRESSES: Send written comments to: NOI–FP Revision, Hoosier National Forest, 811 Constitution Avenue, Bedford, IN 47421, or direct electronic mail to: ''r9 hoosier website''@fs.fed.us. ATTN: Forest Plan Revision

FOR FURTHER INFORMATION CONTACT: Regis Terney, Forest Planner, at 812–275–5987. TDD 812–275–7817; or direct electronic mail to: ''r9 hoosier website''@fs.fed.us, or access the forest web page at www.fs.fed.us/r9/hoosier

Responsible Official: Robert T. Jacobs, Regional Forester, Eastern Region, 310 W. Wisconsin Ave, Milwaukee, Wisconsin 53203.

SUPPLEMENTARY INFORMATION: The Regional Forester for the Eastern Region gives notice of the agency's intent to prepare an EIS to revise the Hoosier National Forest Plan. The Regional Forester approved the original Hoosier National Forest Plan in September 1985. In April 1991, the Regional Forester approved a significant amendment that substantially replaced the 1985 Forest Plan. This plan guides the overall management of the Hoosier National Forest. We make six primary decisions in the Forest Plan:

1. Forest-wide multiple-use goals and objectives
2. Forest-wide management requirements
3. Management area direction
4. Lands suited and not suited for resource use and production (timber management *etc.*)
5. Monitoring and evaluation requirements
6. Recommendations to Congress (such as wilderness), if any

By the requirements of the National Forest Management Act, national forests must revise the Forest Plan at least every 15 years (U.S.C. 1604[f][5]). At this time, there are two reasons to revise the 1991 Forest Plan: (1) It is nearly 15 years since the Regional Forester approved the original plan, and (2)

agency goals and objectives, along with other national guidance for strategic plans and programs, have changed. The agency Government Performance and Results Act Strategic Plan (2000) has shifted the course of agency program emphasis to sustainability.

In many south-central Indiana communities, people expect important products from managed forests such as: timber for wood products, minerals, and game species for hunting. People also value the opportunities forests provide for enjoying recreation, solitude, and scenic beauty. The Hoosier National Forest is integral to the sense of place for communities across south-central Indiana. When making decisions in the revised plan, we would examine economic and social impacts to local communities and at a broader regional level, as well as biological impacts.

We propose to narrow the scope of revising the Forest Plan, focusing on topics identified as being most critically in need of change. These were identified through public comment and through monitoring and evaluation:

Plan Goals: We propose changing the major plan goals to:

- Conservation of Endangered and Threatened Species Habitat;
- Maintain and Restore Sustainable Ecosystems;
- Maintain and Restore Watershed Health;
- Protect our Cultural Heritage;
- Provide for a Visually Pleasing Landscape;
- Provide Recreation Use in Harmony with Natural Communities;
- Provide a Useable Landbase; and,
- Provide for Human and Community Development.

We propose to add the goal of conservation of endangered species and threatened species habitat to further demonstrate our commitment to the Endangered Species Act of 1973. We propose to change our current goal of protect and manage ecosystems to maintain and restore sustainable ecosystems to adapt to the sustainable forest management strategy of the USDA Forest Service Natural Resource Agenda. We propose to add the goal to maintain and restore watershed health. We believe it is important to reaffirm the historic mission of the Hoosier National Forest for watershed protection and restoration.

Revision Topics:

1. Watershed Health
2. Ecosystem Sustainability
3. Recreation Management
4. Roadless Area Inventory and Evaluation
5. Wild and Scenic, and Recreational River Recommendations
6. Scenery Management

Additional detail on the Revision Topics is available on request, in the form of the document titled ''Need for Change, Description of Proposal for Revising the Forest Plan of the Hoosier National Forest''. You are encouraged to review this additional document before commenting on the Notice of Intent. You may request the additional information by calling the phone number listed above, by writing or e-mailing to the address listed in this notice, or by accessing the forest web page at www.fs.fed.us/r9/hoosier.

We propose the following direction or actions:

- Identify desired conditions for healthy watersheds and riparian areas;
- Add direction to protect and restore watershed health;
- Update riparian guidance;
- Add desired conditions to sustain a wide range of habitat to provide for population viability of plant and animal populations and existing biotic communities within the capability of the Hoosier National Forest;
- Add in ecosystem approach that focuses on ecosystem integrity to complement the focus on population viability in assessment and management;
- Complete a population viability assessment;
- Maintain our current policy to allow a full range of vegetative management practices in Management Area 2.8;
- Revise the management indicator list consistent with planning regulations;
- Evaluate the potential Research Natural Areas using ecosystem-based selection criteria;
- Maintain our current policy precluding Off-Road Vehicle use on the forest (all-terrain vehicles, motorcycles, and four-wheel-drive trucks);
- Update the forest roadless inventory consistent with Forest Service policy;
- Follow the national framework to implement roadless areas initiative;
- Replace the Visual Quality Objectives with the Scenery Management System; and,
- Update the monitoring plan.

Proposed New Planning Regulations

The Department of Agriculture expects to publish the final planning rule during the fall of 2000. The proposed rule directs how to conduct forest planning. Given the information in the draft rule and the projected timelines, the Hoosier National Forest Plan revision is expected to be finished under the new planning rule. When the new planning rule is published we will evaluate the changes in analysis standards and we will likely publish an amended notice of intent.

Range of Alternatives

We will consider a range of alternatives when revising the Forest Plan. The alternatives will address different options to resolve issues over the focus areas of change listed above and to fulfill the purpose and need. A ''no-action alternative'' is required, meaning that management would continue under the existing Forest Plan. Alternatives will provide different ways to address and respond to issues identified during the scoping process.

The alternatives will display different mixes of recreation opportunities and experiences. We will examine alternatives that address the public's concerns for less timber harvest, for greater timber harvest, and meeting currently planned harvest levels. The alternatives will display different mixes of wildlife habitats across the forest. The mix will vary by the objectives of the particular alternative, though each alternative will contain the habitat necessary to maintain viable populations of plant and animal species. Management of roadless areas will vary by the objectives of any particular alternative, physical criteria for evaluating each individual roadless area, and public input.

We may make other minor changes, particularly in the guidance chapter of the Forest Plan, to reflect changes made when addressing the above revision topics. The USDA Forest Service proposal does not include any substantial changes to management area allocations. In 1991, we decided the basic philosophy of providing for plant and animal communities guides our forest management activities. As a result, we would not revisit this decision but would carry forward the 1991 plan amendment framework for biological diversity conservation.

We are committed to participate in statewide land management planning and the use of State watershed assessment results and coordination efforts, such as best management practices development for forest management. We would consider technical guidelines developed through these processes when developing guidance and will use the results of watershed assessments.

Inviting Public Participation

We are now soliciting comments and suggestions from federal agencies, state and local governments, individuals, and organizations on the scope of the analysis to be included in the draft

environmental impact statement for the revised Forest Plan (40 CFR 1501.7). Comments should focus on (1) the proposal for revising the Forest Plan (2) possible alternatives for addressing issues associated with the proposal and (3) also identify any possible impacts associated with the proposal based on an individual's civil rights (race, color, national origin, age, religion, gender, disability, political beliefs, sexual orientation, marital or family status). We will encourage public participation in the environmental analysis and decision-making process.

In fall 2000, we would release our notice of intent and proposal. We will have many types of public involvement including: 60-day formal comment period, public meetings, written comments, website and e-mail.

In the years 2001 and 2002, we would work on alternative development and issue validation. We will have many types of public involvement including: public workshops, collaborative meetings, written comments, website, and e-mail.

In the years 2002 and 2003 we would release our proposed revised Forest Plan and a draft environmental impact statement. We will have many types of public involvement including 90-day formal comment period, public meetings, and written comments.

During 2004, we would release the decision, final revised Forest Plan, final environmental impact statement, and record of decision. We will have informational meetings to explain the decision on final Forest Plan.

The Forest Service will host a series of public meetings to (1) establish multiple opportunities for the public to generate ideas, concerns, and alternatives, (2) present and clarify proposed changes to the Forest Plan; (3) describe ways that individuals can respond to this Notice of Intent; and (4) accept comments from the public on this proposal for revising the Forest Plan.

We will provide the public with general notices on opportunities to participate through mailings, news releases, public meetings, and website (www.fs.fed.us/r9/hoosier). In addition to formal opportunities for public comment, we will consider comments received at any time throughout the revision process.

Below is the schedule of initial meetings based on publication of this NOI. We intend to have the most meetings in the first 30 days to give the public time to gather information, participate in meetings and then formulate comments before the close of the 60-day comment period. Additional meetings will be scheduled as needed.

December 4, 2000—Senior Community Center at 1369 Blue Bluff Road in Martinsville, IN, 6 pm to 9 pm (EST)

December 7, 2000—Best Western Old Capital Inn, on State Road 135 (exit 105 off of I–64) in Corydon, Indiana, 6 pm to 9 pm (EST)

Availability of Public Comment: Comments received in response to this solicitation, including names and addresses of those who comment, will be considered part of the public record on this proposed action and will be available for public inspection. Comments submitted anonymously will be accepted and considered; however, those who submit anonymous comments will not have standing to appeal the subsequent decisions under 36 CFR parts 215 or 217.

Additionally, pursuant to 7 CFR 1.27(d), any persons may request the agency to withhold a submission from the public record by showing how the FOIA (Freedom of Information Act) permits such confidentiality. Persons requesting such confidentiality should be aware that under FOIA confidentiality may be granted in only very limited circumstances, such as to protect trade secrets.

The Forest Service will inform the requester of the agency's decision regarding the request for confidentiality and where the requester is denied, the agency will return the submission and notify the requester that the comments may be resubmitted with or without name and address within 90 days.

Release and Review of the Draft EIS: The DEIS is expected to be filed with the Environmental Protection Agency (EPA) and to be available for public comment in 2003. At that time, the EPA will publish a notice of availability in the **Federal Register**. The comment period on the DEIS will be 90 days from the date the EPA publishes the notice of availability in the **Federal Register**.

The Forest Service believes, at this early stage, that it is important to give reviewers notice of several court rulings related to public participation in the environmental review process. First, reviewers of draft environmental impact statements must structure their participation in the environmental review of the proposal so that it is meaningful and alerts an agency to the reviewer's position and contentions. *Vermont Yankee Nuclear Poser Corp.* v. *NRDS,* 435 U.S. 519, 553 (1978). Also, environmental objections that could be raised at the draft environmental impact statement stage but that are not raised until after completion of the final environmental impact statement may be waived or dismissed by the courts. *City of Angoon* v. *Hodel,* 803 F.2d 1016, 1022 (9th cir. 1986) and *Wisconsin Heritages, Inc.* v. *Harris,* 490 F. Supp. 1334, 1338 (E.D. Wis. 1980). Because of these court rulings it is very important that those interested in this proposed action participate by the close of the 90-day comment period so that substantive comments and objections are made available to the Forest Service at a time when it can meaningfully consider them and respond to them in the final environmental impact statement.

To assist the Forest Service in identifying and considering issues and concerns on the proposed action, comments on the draft environmental impact statement should be specific as possible. It is also helpful if comments refer to specific pages or chapters of the draft statement. Comments may also address the adequacy of the draft environmental impact statement or the merits of the alternatives formulated and discussed in the statement. Reviewers may wish to refer to the Council of Environmental Quality Regulations (http://ceq.eh.doe.gov.nepa/nepanet.htm) for implementing the procedural provision of the National Environmental Policy Act at 40 CFR 1503.3 in addressing these points.

Dated: October 26, 2000.

Robert T. Jacobs,

Regional Forester.

[FR Doc. 00–27985 Filed 10–31–00; 8:45 am]

BILLING CODE 3410–11–M.

DEPARTMENT OF AGRICULTURE

Forest Service

Southwest Washington Provincial Advisory Committee Meeting Notice

AGENCY: Forest Service, USDA.

ACTION: Notice of meeting.

SUMMARY: The Southwest Washington Provincial Advisory Committee will meet on Wednesday, November 15, 2000, at the Gifford Pinchot National Forest Office, located at 10600 NE 51st Circle, Vancouver, Washington. The meeting will begin at 9 a.m. and continue until 4:15 p.m. The purpose of the meeting is to: (1) Review the National Roads Policy; (2) Discuss the mission of the committee, and (3) Provide for a Public Open Forum. All Southwest Washington Provincial Advisory Committee meetings are open to the public. Interested citizens are encouraged to attend. The ''open forum'' provides opportunity for the public to bring issues, concerns, and discussion

topics to the Advisory Committee. The ''open forum'' is scheduled as part of agenda item (3) for this meeting. Interested speakers will need to register prior to the open forum period. The committee welcomes the public's written comments on committee business at any time.

FOR FURTHER INFORMATION CONTACT: Direct questions regarding this meeting to Linda Turner, Public Affairs Specialist, at (360) 891–5195, or write Forest Headquarters Office, Gifford Pinchot National Forest, 10600 NE. 51st Circle, Vancouver, WA 98682.

Dated: October 26, 2000.

Claire Lavendel,

Forest Supervisor.

[FR Doc. 00–28038 Filed 10–31–00; 8:45 am]

BILLING CODE 3410–11–M

DEPARTMENT OF COMMERCE

Submission for OMB Review; Comment Request

DOC has submitted to the Office of Management and Budget (OMB) for clearance the following proposal for collection of information under the provisions of the Paperwork Reduction Act (44 U.S.C. Chapter 35).

Agency: Bureau of Economic Analysis.

Title: Annual Survey of Selected Services Transactions With Unaffiliated Foreign Persons.

Form Number(s): BE–22.

Agency Approval Number: 0608–0060.

Type of Request: Extension of a currently approved collection without any change in the substance or in method of collection.

Burden: 17,250 hours.

Number of Respondents: 1,500.

Avg Hours Per Response: 11.5.

Needs and Uses: The Government requires data from the BE–22 annual survey to obtain reliable and up-to-date information on selected U.S. services transactions with unaffiliated foreign persons, by type of service cross-classified by foreign country. The data will update the results of the BE–20 benchmark survey, which covers the universe of such transactions. The BE–20 is conducted once every five years, and the last survey covered 1996. A BE–22 survey is conducted each of the four years between two benchmark surveys; the last BE–22 covered 1999. Some of the major purposes of the survey are to provide information needed in formulating U.S. international trade agreements, compile the U.S. international transactions and national income and product accounts, assess and promote U.S. competitiveness in international trade in services, and improve the ability of U.S. businesses to identify and evaluate market opportunities.

Affected Public: Businesses and other for-profit and not-for-profit institutions, State and local governments, or other institutions engaging in international transactions in the covered services.

Frequency: Annual.

Respondent's Obligation: Mandatory.

Legal Authority: Title 22 U.S.C., Sections 3101–3108, as amended.

OMB Desk Officer: Paul Bugg, (202) 395–3093.

Copies of the above information collection proposal can be obtained by calling or writing DOC Forms Clearance Officer, Madeleine Clayton, (202) 482–3129, Department of Commerce, Room 6086, 14th and Constitution Avenue, NW, Washington DC 20230 or by E-mail to MClayton@doc.gov.

Written comments and recommendations for the proposed information collection should be sent within 30 days of publication of this notice to Paul Bugg, OMB Desk Officer, Room 10201, New Executive Office Building, Washington DC 20503.

Dated: October 27, 2000.

Madeleine Clayton,

Departmental Forms Clearance Officer, Office of the Chief Information Officer.

[FR Doc. 00–28020 Filed 10–31–00; 8:45 am]

BILLING CODE 3510–06–P

DEPARTMENT OF COMMERCE

Submission for OMB Review; Comment Request

DOC has submitted to the Office of Management and Budget (OMB) for clearance the following proposal for collection of information under the provisions of the Paperwork Reduction Act (44 U.S.C. Chapter 35).

Agency: Bureau of Economic Analysis (BEA).

Title: Transactions of U.S. Affiliate, Except a U.S. Banking Affiliate, with Foreign Parent (Form BE–605) and Transactions of U.S. Banking Affiliate with Foreign Parent (Form BE–605 Bank).

Form Number(s): BE–605 and BE–605 Bank.

Agency Approval Number: 0608–0009.

Type of Request: Extension of a currently approved collection without any change in the substance or in the method of collection.

Burden: 19,750 hours.

Number of Respondents: 3,950 per quarter; 15,800 annually.

Avg Hours Per Response: 1¼ hours.

Needs and Uses: The U.S. Government requires data from the BE–605 (quarterly) survey for compiling the international transactions accounts, input-output accounts, and national income and product accounts of the United States. The data are also needed to measure the amount of foreign direct investment in the United States, monitor changes in such investment, assess its impact on the U.S. and foreign economies, and, based upon this assessment, make informed policy decisions regarding foreign direct investment in the United States.

Also, the data from the BE–605 survey complement data from BEA's other ongoing surveys of foreign direct investment in the United States, namely the BE–13, Initial Report on a Foreign Person's Direct or Indirect Acquisition, Establishment, or Purchase of the Operating Assets, of a U.S. Business Enterprise, Including Real Estate, and the BE–12 (benchmark) and BE–15 (annual) surveys, which provide data on the overall operations of U.S. affiliates.

Affected Public: U.S. businesses or other for-profit institutions.

Frequency: Quarterly.

Respondent's Obligation: Mandatory.

Legal Authority: Title 22 U.S.C., Sections 3101–3108, as amended.

OMB Desk Officer: Paul Bugg, (202) 395–3093.

You may obtain copies of the above information collection proposal by calling or writing Madeleine Clayton, Departmental Forms Clearance Officer, Office of the Chief Information Officer, (202) 482–3129, Department of Commerce, Room 6086, 14th Street and Constitution Avenue, NW, Washington, DC 20230.

Send comments on the proposed information collection within 30 days of publication of this notice to Paul Bugg, OMB Desk Officer, Room 10201, New Executive Office Building, Washington, DC 20503.

Dated: October 27, 2000.

Madeleine Clayton,

Departmental Forms Clearance Officer, Office of the Chief Information Officer.

[FR Doc. 00–28021 Filed 10–31–00; 8:45 am]

BILLING CODE 3510–06–P

DEPARTMENT OF COMMERCE

International Trade Administration

[A–421–805]

Final Results of Full Sunset Review: Aramid Fiber Formed of Poly Para-Phenylene Terephthalamide From the Netherlands

AGENCY: Import Administration, International Trade Administration, Department of Commerce.

ACTION: Notice of Final Results of Expedited Sunset Review: Aramid Fiber formed of Poly Para-Phenylene Terephthalamide from the Netherlands.

SUMMARY: On June 23, 2000, the Department of Commerce (''the Department'') published a notice of preliminary results of the full sunset review of the antidumping duty order on aramid fiber formed of poly para-phenylene terephthalamide (''aramid fiber'') from the Netherlands (64 FR 39124) pursuant to section 751(c) of the Tariff Act of 1930, as amended (''the Act''). We provided interested parties an opportunity to comment on our preliminary results. We received comments from both domestic and respondent interested parties. No public hearing was requested by the parties. As a result of this review, the Department finds that revocation of the antidumping order would likely lead to continuation or recurrence of dumping at the levels indicated in the Final Results of Review section of this notice.

Effective Date: November 1, 2000.

FOR FURTHER INFORMATION CONTACT: Martha V. Douthit or James P. Maeder, Office of Policy for Import Administration, International Trade Administration, U.S. Department of Commerce, 14th Street and Constitution Avenue, NW, Washington, DC 20230; telephone: (202) 482–5050 or (202) 482–3330, respectively.

SUPPLEMENTAL INFORMATION:

The Applicable Statute and Regulations

This review is being conducted pursuant to sections 751(c) and 752 of the Act. The Department's procedures for the conduct of sunset reviews are set forth in *Procedures for Conducting Five-year (''Sunset'') Reviews of Antidumping and Countervailing Duty Orders,* 63 FR 13516 (March 20, 1998) (''*Sunset Regulations*'') and in 19 CFR Part 351 (2000) in general. Guidance on methodological or analytical issues relevant to the Department's conduct of sunset reviews is set forth in the Department's Policy Bulletin 98:3—*Policies Regarding the Conduct of Five-year (''Sunset'') Reviews of Antidumping and Countervailing Duty Orders; Policy Bulletin,* 63 FR 18871 (April 16, 1998) (*''Sunset Policy Bulletin''*).

Background

On June 23, 2000, the Department published in the **Federal Register** a notice of preliminary results of the full sunset review of the antidumping order on aramid fiber from the Netherlands (65 FR 39124), pursuant to section 751(c) of the Act. In our preliminary results, we found that revocation of the order would likely result in continuation or recurrence of dumping with weighted-average dumping margins of 2.90 percent for Akzo and 66.92 percent for all other Dutch producers and exporters of the subject merchandise.

On August 7, 2000, the domestic interested party, E.I. Dupont de Nemours & Company (''DuPont''), submitted a case brief within the deadline specified in 19 CFR 351.309(c)(1)(i). On August 14, 2000, the respondent interested party, Twaron Products V.o.F. and Twaron Products, Inc. (formerly, Azko) (collectively, ''Twaron''), submitted rebuttal briefs within the deadline specified in 19 CFR 351.309(c)(1)(i). The Department provided interested parties an opportunity to request a public hearing, in accordance with 19 CFR 351.310. In this sunset review, no public hearing was requested or held.

Scope of Review

The products covered by this review are all forms of aramid fiber from the Netherlands. These consist of aramid fiber in the form of filament yarn (including single and corded), staple fiber, pulp (wet or dry), spun-laced and spun-bonded nonwovens, chopped fiber, and floc. Tire cord is excluded from the class or kind of merchandise under review. This merchandise is currently classifiable under the Harmonized Tariff Schedule of the United States (''HTSUS'') item numbers 5402.10.3020, 5402.10.3040, 5402.10.6000, 5503.10.1000, 5503.10.9000, 5601.30.0000, and 5603.00.9000. The HTSUS item numbers are provided for convenience and Customs purposes. The written description of the scope remains dispositive.

Analysis of Comments Received

All issues raised in the case and rebuttal briefs by parties to this sunset review are addressed in the ''Issues and Decision Memorandum'' (''Decision Memo'') from Jeffrey A. May, Director, Office of Policy, Import Administration, to Troy H. Cribb, Assistant Secretary for Import Administration, dated October 26, 2000, which is hereby adopted by this notice. The issues discussed in the Decision Memo include the likelihood of continuation or recurrence of dumping and the magnitude of the margin likely to prevail were the order revoked. Parties can find a complete discussion of all issues raised in this review and the corresponding recommendations in this public memorandum, which is on file in room B–099 of the main Commerce Building. In addition, a complete version of the Decision Memorandum can be accessed directly on the Web at http://ia.ita.doc.gov. The paper copy and electronic version of the Decision Memo are identical in content.

Final Results of Review

We determine that revocation of the antidumping duty order on aramid fiber from the Netherlands would be likely to lead to continuation or recurrence of dumping at the percentage weighted-average margins listed below:

Manufacturer/exporter	Margin (percent)
Azko	2.90
All Others	66.92

This notice serves as the only reminder to parties subject to administrative protective order (APO) of their responsibility concerning the disposition of proprietary information disclosed under APO in accordance with 19 CFR 351.305 of the Department's regulations. Timely notification of return/destruction of APO materials or conversion to judicial protective order is hereby requested. Failure to comply with the regulations and the terms of an APO is a sanctionable violation.

This five-year (''sunset'') review and notice are in accordance with sections 751(c), 752, and 777(i)(1) of the Act.

Dated: October 26, 2000.

Troy H. Cribb,

Assistant Secretary for Import Administration.

[FR Doc. 00–28042 Filed 10–31–00; 8:45 am]

BILLING CODE 3510–DS–P

DEPARTMENT OF COMMERCE

International Trade Administration

[C–475–812]

Grain-Oriented Electrical Steel from Italy; Final Results of Full Sunset Review of Countervailing Duty Order

AGENCY: Import Administration, International Trade Administration, Department of Commerce.

ACTION: Notice of final results of full sunset review: Grain-oriented electrical steel from Italy.

SUMMARY: On June 23, 2000, the Department of Commerce (''the Department'') published in the **Federal Register** (65 FR 39129) the preliminary results of the full sunset review of the countervailing duty order on grain-oriented electrical steel (''GOES'') from Italy, pursuant to section 751(c) of the Tariff Act of 1930, as amended (''the Act''). We provided interested parties an opportunity to comment on our preliminary results and received comments from domestic and respondent interested parties. As a result of this review, the Department finds that revocation of the countervailing duty orders would be likely to lead to continuation or recurrence of a countervailable subsidy. The net countervailable subsidy and the nature of the subsidy are identified in the Final Results of Review section of this notice.

FOR FURTHER INFORMATION CONTACT: Becky Hagen or James Maeder, Office of Policy for Import Administration, International Trade Administration, U.S. Department of Commerce, 14th and Constitution, NW., Washington, DC 20230; telephone: (202) 482–1277 or (202) 482–3330, respectively.

EFFECTIVE DATE: November 1, 2000.

Statute and Regulations

These reviews were conducted pursuant to sections 751(c) and 752 of the Act. The Department's procedures for the conduct of sunset reviews are set forth in Procedures for Conducting Five-year (''Sunset'') Reviews of Antidumping and Countervailing Duty Orders, 63 FR 13516 (March 20, 1998) (''Sunset Regulations'') and in 19 CFR part 351 (1999) in general. Guidance on methodological or analytical issues relevant to the Department's conduct of sunset reviews is set forth in the Department's Policy Bulletin 98:3—Policies Regarding the Conduct of Five-year (''Sunset'') Reviews of Antidumping and Countervailing Duty Orders; Policy Bulletin, 63 FR 18871 (April 16, 1998) (''Sunset Policy Bulletin'').

Scope of Review

The merchandise subject to this review is Italian GOES, which is a flat-rolled alloy steel product containing by weight at least 0.6 percent of silicon, not more than 0.08 percent of carbon, not more than 1.0 percent of aluminum, and no other element in an amount that would give the steel the characteristics of another alloy steel, of a thickness of no more than 0.56 millimeter, in coils of any width, or in straight lengths which are of a width measuring at least ten times the thickness. The merchandise is currently classifiable in the Harmonized Tariff Schedule (''HTS'') under item numbers 7225.10.0030, 7226.10.1030, 7226.10.5015, and 7226.10.5065. Although HTS subheadings are provided for convenience and customs purposes, our written description of the scope of this proceeding is dispositive.

Background

On June 23, 2000, the Department of Commerce (''the Department'') published in the **Federal Register** a notice of preliminary results of the full sunset review of the countervailing duty order on GOES from Italy (65 FR 39129) pursuant to section 751(c) of the Tariff Act of 1930, as amended (''the Act''). In our preliminary results, we found that revocation of the order would likely result in continuation or recurrence of a net countervailable subsidy at the rate of 24.46 percent for all Italian GOES producers/exporters.

On July 27, 2000, Acciai Speciali Terni S.p.A. and Acciai Speciali Terni USA, Inc. (together ''AST'') requested a hearing in the sunset review. On August 7, 2000, within the deadline specified in 19 CFR 351.309(c)(1)(i), we received a case brief on behalf of AST; on August 14, 2000, we received a rebuttal brief from domestic interested parties. The hearing was held on September 26, 2000.

Analysis of Comments Received

All issues raised in the case and rebuttal briefs by parties to this sunset review are addressed in the ''Issues and Decision Memorandum'' (''Decision Memo'') from Jeffrey A. May, Director, Office of Policy, Import Administration, to Troy H. Cribb, Acting Assistant Secretary for Import Administration, dated October 26, 2000, which is hereby adopted by this notice. The issues discussed in the attached Decision Memo include the likelihood of continuation or recurrence of countervailable subsidies and the net countervailable subsidy likely to prevail were the order revoked. Parties can find a complete discussion of all issues raised in this review and the corresponding recommendations in this public memorandum which is on file in the Central Records Unit, room B–099, of the main Commerce Building.

In addition, a complete version of the Decision Memo can be accessed directly on the Web at http://ia.ita.doc.gov/frn/, under the heading ''Italy.'' The paper copy and electronic version of the Decision Memo are identical in content.

Final Results of Review

As a result of this review, the Department finds that revocation of the countervailing duty orders would be likely to lead to continuation or recurrence of a countervailable subsidy at the rates listed below:

Producer/exporter	Margin (percent)
All Italian producers/exporters	24.2

Nature of the Subsidy

In the *Sunset Policy Bulletin* (63 FR 18876), the Department states that, consistent with section 752(a)(6) of the Act, the Department will provide to the Commission information concerning the nature of the subsidy, and whether the subsidy is a subsidy described in Article 3 or Article 6.1 of the Subsidies Agreement. Although the programs at issue do not fall within Article 3 of the Subsidies Agreement, some or all of them could be found to be inconsistent with Article 6.1. For example, the net countervailable subsidy may exceed five percent. The Department, however, has no information with which to make such a calculation; nor do we believe it appropriate to attempt such a calculation in the course of a sunset review. Moreover, we note that, as of January 1, 2000, Article 6.1 has ceased to apply (*see* Article 31 of the Subsidies Agreement). As such, we are providing the Commission with program descriptions in our Decision Memorandum.

This notice serves as the only reminder to parties subject to administrative protective order (''APO'') of their responsibility concerning the disposition of proprietary information disclosed under APO in accordance with 19 CFR 351.305 of the Department's regulations. Timely notification of return/destruction of APO material or conversion to judicial protective order is hereby requested. Failure to comply with the regulations and the terms of an APO is a sanctionable violation.

This five-year (''sunset'') review and notice are in accordance with sections 751(c), 752, and 777(i)(1) of the Act.

Dated: October 26, 2000.

Troy H. Cribb,

Assistant Secretary for Import Administration.

[FR Doc. 00–28043 Filed 10–31–00; 8:45 am]

BILLING CODE 3510–DS–P

DEPARTMENT OF COMMERCE

International Trade Administration

Applications for Duty-Free Entry of Scientific Instruments

Pursuant to section 6(c) of the Educational, Scientific and Cultural Materials Importation Act of 1966 (Pub. L. 89–651; 80 Stat. 897; 15 CFR part 301), we invite comments on the question of whether instruments of equivalent scientific value, for the purposes for which the instruments shown below are intended to be used, are being manufactured in the United States.

Comments must comply with 15 CFR 301.5(a)(3) and (4) of the regulations and be filed within 20 days with the Statutory Import Programs Staff, U.S. Department of Commerce, Washington, DC 20230. Applications may be examined between 8:30 A.M. and 5:00 P.M. in Room 4211, U.S. Department of Commerce, 14th Street and Constitution Avenue, NW., Washington, DC.

Docket Number: 00–033. *Applicant:* University of Florida, Department of Geological Sciences, 241 Williamson Hall, PO Box 112120, Gainesville, FL 32611. *Instrument:* Multi-Sensor Core Logger. *Manufacturer:* GEOTEK Ltd., United Kingdom. *Intended Use:* The instrument is intended to be used to rapidly, accurately and automatically collect information on physical properties of sediment cores collected from locations such as the bottom of lakes, the ocean, and wetlands. The objective of the research is to provide further information (P-wave velocity, density, magnetic susceptibility, sediment core thickness and high resolution visible images) about past conditions recorded in sediment cores. The data will be combined with the geochemical, isotopic, botanical, and sedimentological data that are already collected on these sediment cores. In addition, the instrument will be used for educational purposes in Paleolimnology (GLY 6932) the study of past lake systems and the records of climate, biology, vegetation, etc. preserved in lake sediments. The class introduces methods of study of past climates of the Quaternary period. Application accepted by Commissioner of Customs: October 17, 2000.

Docket Number: 00–034. *Applicant:* University of Rochester, Lab for Laser Energetics, 250 East River Road, Rochester, NY 14623. *Instrument:* Scanning Nearfield Optical Microscope. *Manufacturer:* WITec, Germany. *Intended Use:* The instrument is intended to be used for studies of both inorganic crystals and glasses as used in advanced optical technologies and organic substances such as polymers and biopolymers that may be present in optical materials either as undesired impurities or for the purpose of enhancing the materials' performance. The analysis tasks are of the spatially resolved spectroscopy type: (a) Raman Imaging, (b) single-molecule emission and (c) nonlocal fluorescence spectroscopy. In addition, the instrument will be used for educational purposes in ''Nanooptics'' a graduate level course that introduces doctoral-level students to the principles and applications of subwavelength optical phenomena and applications. Application accepted by Commissioner of Customs: October 17, 2000.

Frank W. Creel,

Director, Statutory Import Programs Staff.

[FR Doc. 00–28044 Filed 10–31–00; 8:45 am]

BILLING CODE 3510–DS–P

COMMITTEE FOR THE IMPLEMENTATION OF TEXTILE AGREEMENTS

Exemption for Certain Textile and Apparel Articles from Designated Caribbean Basin Trade Partnership Act Beneficiary Countries from Existing Quota, Guaranteed Access Levels (GALs), Visa and GAL Certification Requirements

October 30, 2000.

AGENCY: Committee for the Implementation of Textile Agreements (CITA).

ACTION: Issuing a directive to the Commissioner of Customs exempting certain textile and apparel articles from quota, Guaranteed Access Levels (GALs), visa and GAL certification requirements.

EFFECTIVE DATE: October 2, 2000.

FOR FURTHER INFORMATION CONTACT: Naomi Freeman, International Trade Specialist, Office of Textiles and Apparel, U.S. Department of Commerce, (202) 482–4212.

SUPPLEMENTARY INFORMATION:

Authority: Section 211 of the Trade and Development Act of 2000 (19 U.S.C. 2703); Presidential Proclamation 7351 of October 2, 2000; Section 204 of the Agricultural Act of 1956, as amended (7 U.S.C. 1854); Executive Order 11651 of March 3, 1972, as amended.

Section 211 of the Trade and Development Act of 2000 provides duty and quota-free treatment for certain textile and apparel articles imported from designated Caribbean Basin Trade Partnership Act (CBTPA) beneficiary countries. On October 2, 2000, the President designated Costa Rica, Dominican Republic, El Salvador, Guatemala, Haiti, Jamaica and Panama, among others, as CBTPA beneficiary countries (Proclamation 7351, 65 FR 59329, published on October 4, 2000).

Effective October 2, 2000, the U.S. Trade Representative determined that these countries, among others, have implemented and follow, or are making substantial progress towards implementing and following, the customs procedures required by the CBTPA, and the U.S. Trade Representative amended the Harmonized Tariff Schedule of the United States (HTS) to provide the tariff treatment authorized under the CBTPA for goods from these countries (65 FR 60236, published on October 10, 2000).

The CBTPA provides that textile and apparel articles that qualify for CBTPA benefits shall enter the United States free of duty and free of any quantitative restriction, limitation, or consultation level. Therefore, CITA directs the U.S. Customs Service no longer to impose specific limits on textile and apparel articles from Costa Rica, Dominican Republic, El Salvador, Guatemala, Haiti, Jamaica and Panama that qualify for preferential treatment under Section 211 of the Trade and Development Act of 2000, and no longer to impose Guaranteed Access Levels (GALs), visa and GAL certification requirements for these articles.

Benefits under Section 211 for certain knit apparel from all beneficiary countries are limited in each of the one-year periods, beginning on October 1, 2000 and ending on September 30, 2008 (19 U.S.C. 2703(b)(2)(A)(iii)(I, II). Similarly, benefits under this provision for t-shirts are also limited during this period (19 U.S.C. 2703(b)(2)(A)(iii)(III, IV). Applicable quota and visa

requirements will apply to imports in excess of each of the one-year limits.

D. Michael Hutchinson,

Acting Chairman, Committee for the Implementation of Textile Agreements.

Committee for the Implementation of Textile Agreements

October 30, 2000.

Commissioner of Customs
Department of the Treasury, Washington, D.C. 20229

Dear Commissioner:

This directive exempts from otherwise applicable quota, Guaranteed Access Levels (GALs), visa and GAL certification requirements certain textile and apparel articles, produced or manufactured in Costa Rica, Dominican Republic, El Salvador, Guatemala, Haiti, Jamaica, and Panama, and exported to the United States.

Effective on October 2, 2000, textile and apparel articles, imported from Costa Rica, Dominican Republic, El Salvador, Guatemala, Haiti, Jamaica or Panama, qualifying for duty and quota-free treatment under Section 211 of the Trade and Development Act of 2000, are not subject to otherwise applicable quota, GALs, visa or GAL certification requirements.

Benefits under Section 211 for certain knit apparel from all beneficiary countries are limited in each of the one-year periods, beginning on October 1, 2000 and ending on September 30, 2008. (19 U.S.C. 2703(b)(2)(A)(iii)(I, II) Similarly, benefits under this provision for t-shirts are also limited during this period. (19 U.S.C. 2703(b)(2)(A)(iii)(III, IV) Applicable quota and visa requirements will apply to imports in excess of each of the one-year limits.

The Committee for the Implementation of Textile Agreements has determined that these actions fall within the foreign affairs exception to the rulemaking provisions of 5 U.S.C. 553(a)(1).

Sincerely,

D. Michael Hutchinson,

Acting Chairman, Committee for the Implementation of Textile Agreements.

[FR Doc. 00–28134 Filed 10–30–00; 11:58 am]

BILLING CODE 3510–DR–F

CORPORATION FOR NATIONAL AND COMMUNITY SERVICE

Corporation-Supported Programs Covered by Title IX Regulations

AGENCY: Corporation for National and Community Service.

ACTION: Notice.

SUMMARY: In a document published in the **Federal Register** on August 30, 2000 (65 FR 52857), the Corporation for National Service (Corporation) joined many other Federal agencies in issuing final regulations providing for the enforcement of Title IX of the Education Amendments of 1972, as amended, which prohibits recipients of Federal financial assistance from discriminating on the basis of sex in educational programs or activities. This notice identifies programs supported by the Corporation that are covered by the Title IX regulations. The purpose of the list is to ensure that recipients of Corporation assistance are aware of their obligations under Title IX.

ADDRESSES: Our address is 1201 New York Avenue NW, Washington, D.C. 20525.

FOR FURTHER INFORMATION CONTACT: For further information, contact Frank Trinity at (202) 606–5000, ext. 256. This notice may be requested in an alternative format for the visually impaired.

SUPPLEMENTARY INFORMATION: All recipients of assistance from the Corporation for National and Community Service under the National and Community Service Act of 1990, as amended, and the Domestic Volunteer Service Act of 1973, as amended, are hereby on notice that their Corporation-assisted programs and activities are considered ''training and education activities'' for the purposes of Title IX of the Education Amendments of 1972, as amended. These programs and activities include, but are not limited to, those listed in the following table:

Program	Authority	Basis for Title IX coverage
Learn and Serve America School-Based, Community-Based, Higher Education, Service-Learning Clearinghouse.	42 U.S.C. 12521–12561	42 U.S.C. 12635(b).
AmeriCorps program grants, including State, National, Tribes and Territories, Education Awards, Promise Fellows, Leaders.	42 U.S.C. 12571–12595, 12653	42 U.S.C. 12635(b).
Training and technical assistance	42 U.S.C. 12574	42 U.S.C. 12635(b).
Administrative grants to State Commissions	42 U.S.C. 12576(a)	42 U.S.C. 12635(b).
Disaster relief	42 U.S.C. 12576(b)	42 U.S.C. 12635(b).
Challenge grants	42 U.S.C. 12576(c)	42 U.S.C. 12635(b).
Disability placement	42 U.S.C. 12581(d)(5)(B)	42 U.S.C. 12635(b).
Disability outreach	42 U.S.C. 12581(d)(5)(C)	42 U.S.C. 12635(b).
Program Development and Training	42 U.S.C. 12653	42 U.S.C. 12635(b).
National Civilian Community Corps	42 U.S.C. 12611–12626	42 U.S.C. 12635(b).
Innovation and Quality activities under subtitle H, including but not limited to Martin Luther King, Jr. Day of Service grants, co-operative agreements to provide training and technical assistance, to carry out the President's Student Service Scholarships and the President Student Service Awards, and for other purposes.	42 U.S.C. 12653	42 U.S.C. 12635(b).
Points of Light Foundation	42 U.S.C. 12661–12664	Assisted activities include training, workshops, curriculum development.
AmeriCorps VISTA	42 U.S.C. 4951–4995	42 U.S.C. 5057; training a core element of programs.
National Senior Service Corps	42 U.S.C. 5000–5028a	42 U.S.C. 5057; training a core element of programs.

Dated: October 26, 2000.

Wendy Zenker,

Chief Operating Officer, Corporation for National and Community Service.

[FR Doc. 00–28000 Filed 10–31–00; 8:45 am]

BILLING CODE 6050–28–P

DEPARTMENT OF DEFENSE

[OMB Control Number 0704–0229]

Information Collection Requirement; Defense Federal Acquisition Regulation Supplement; Foreign Acquisition

AGENCY: Department of Defense (DoD).

ACTION: Correction to notice.

SUMMARY: DoD is issuing a correction to the notice published at 65 FR 63844 on October 25, 2000, that requested comments regarding a proposed extension of an approved information collection requirement. The notice inadvertently omitted recordkeeping hours from the estimate of annual burden hours shown for the information collection requirement.

FOR FURTHER INFORMATION CONTACT: Ms. Amy Williams, Defense Acquisition Regulations Council, OUSD (AT&L)DP(DAR), IMD 3C132, 3062 Defense Pentagon, Washington, DC 20301–3062. Telephone (703) 602–0288; telefax (703) 602–0350.

Correction

In the issue of Wednesday, October 25, 2000, on page 63844, in the third column, in the **SUPPLEMENTARY INFORMATION** section, the entry *''Annual Burden Hours'' is corrected to read as follows:*

Annual Burden Hours: 374,268 (74,173 reporting hours; 300,095 recordkeeping hours).

Michele P. Peterson,

Executive Editor, Defense Acquisition Regulations Council.

[FR Doc. 00–28003 Filed 10–31–00; 8:45 am]

BILLING CODE 5000–04–M

DEPARTMENT OF DEFENSE

Office of the Secretary

Submission for OMB Review; Comment Request

ACTION: Notice.

The Department of Defense has submitted to OMB for clearance, the following proposal for collection of information under the provisions of the Paperwork Reduction Act (44 U.S.C. Chapter 35).

Title and OMB Number: Survey of Army Applicants Who Were Qualified Not Enlisted (QNE) or Those Who Entered the Delayed Entry Program (DEP) But Chose Not to Enlist: OMB Number 0702–[To Be Determined].

Type of Request: New Collection.

Number of Respondents: 8,000.

Responses Per Respondent: 1.

Annual Responses: 2,240.

Average Burden Per Response: 21 minutes.

Annual Burden Hours: 784.

Needs and Uses: This survey effort will collect expectation metrics concerning the value of Army enlistment incentives, training, and job/occupational choices. A very large number of individuals make a decision to enlist in the Army and, although qualified, do not complete the enlistment process. Another group of individuals actually enlist, and become members of the Delayed Entry Program, then later change their mind prior to actual ship date and become a loss. Understanding the reasons for these losses may place the Army Recruiting Command in a better position to provide the necessary number of recruits to maintain end strength.

Affected Public: Individuals and Households.

Frequency: Annually.

Respondent's Obligation: Voluntary.

OMB Desk Officer: Mr. Edward C. Springer.

Written comments and recommendations on the proposed information collection should be sent to Mr. Springer at the Office of Management and Budget, Desk Officer for DoD, Room 10236, New Executive Office Building, Washington, DC 20503.

DOD Clearance Officer: Mr. Robert Cushing.

Written requests for copies of the information collection proposal should be sent to Mr. Cushing WHS/DIOR, 1215 Jefferson Davis Highway, Suite 1204, Arlington, VA 22202–4302.

Dated: October 25, 2000.

Patricia L. Toppings,

Alternate, OSD Federal Register Liaison Officer, Department of Defense.

[FR Doc. 00–27968 Filed 10–31–00; 8:45 am]

BILLING CODE 5001–10–M

DEPARTMENT OF DEFENSE

Department of the Army

Draft Integrated Total Army Personnel Data Base (ITAPDB) Data Element Standard Version 1.0 (VI.0)

AGENCY: Deputy Chief of Staff for Personnel, U.S. Army, DoD.

ACTION: Notice (Request for comments).

SUMMARY: The Department of the Army, Office of the Deputy Chief of Staff for Personnel, in coordination with the U.S. Army Reserves and the Army National Guard, announce the final revision of the Integrated Total Army Personnel Data Base (ITAPDB) Data Element Standard Version 1.0 (VI.0), dated 10 October 2000. Comments are invited on ways to: (a) enhance the quality and clarity of the information contained therein; and (b) continue the establishment of a common set of data element standard that will enable the Army to eliminate redundant data, ensure commonality of information, reduce data conversion cost, and align with DoD development initiatives.

DATES: Consideration will be given to all comments received by December 1, 2000. All comments received within 30 days of publication of this notice will be considered for inclusion into ITAPDB Data Element Standard V2.0.

ADDRESSES: Written comments and recommendations on the proposed information collection should be sent to Director, Information Systems, Office of the Deputy Chief of Staff for Personnel, Attn: DAPE-ZXI (Ms. Golden Giddings/Ms. Angela McCoy), 300 Army Pentagon, Washington, DC 20310. Consideration will be given to all comments received within 30 days of the date of publication of this notice. E-mail address for Ms. Giddings is giddigl@hqda.army.mil and for Ms. McCoy is mccoyak@hqda.army.mil

FOR FURTHER INFORMATION CONTACT: Mr. Paul Oestreich, (703) 325–8877, oestreip@hoffman.army.mil

SUPPLEMENTARY INFORMATION: The ITAPDB establishes data element standard that will be shared among Army information systems horizontally between Army communities and vertically between field level and DA human resource information systems. Establishing a common set of data element standards enables the Army to eliminate redundant data, ensure commonality of information, reduce data conversion costs, and align with DoD development initiatives. As ITAPDB Data Element Standard evolves, it will apply to intelligence, operations, fire support, logistics, safety, transportation, human resource, military police, medical, dental, finance, chaplain, legal, post operation, civilian personnel, moral and welfare, recreation, force management, education center, inspector general and contractor support mission areas as it pertains to people related exchange of information or data.

This standard is essential to achieve effective and efficient system interoperability among systems that support all Army human resources—soldier, civilian, or contractor in active or retired status.

Individuals desiring a copy of the finalized ITAPDB Data Element Standard Version 1.0 should e-mail or write to Ms. Giddings or Mr. Oestreich at the above addresses.

Gregory D. Showalter,

Army Federal Register Liaison Officer.

[FR Doc. 00–28022 Filed 10–31–00; 8:45 am]

BILLING CODE 3710–08–P

DEPARTMENT OF ENERGY

Federal Energy Regulatory Commission

[Docket No. RT01–81–000]

Cleco Evangeline, LLC; Notice of Filing

October 25, 2000.

Take notice that on October 24, 2000, the entities listed in the caption above made compliance filings pursuant to 18 CFR 35.34(c) and the Commission's Order No. 2000.[1]

Any person desiring to be heard or to protest such filings should file a motion to intervene, comments, or protest with the Federal Energy Regulatory Commission, 888 First Street, NE., Washington, DC 20426, in accordance with Rules 211 and 214 of the Commission's Rules of Practice and Procedure (18 CFR 385.211 and 385.214). All such motions, comments and protests should be filed on or before November 20, 2000. Protests will be considered by the Commission to determine the appropriate action to be taken, but will not serve to make protestants parties to the proceedings. Any person wishing to become a party must file a motion to intervene. Copies of this filing are on file with the Commission and are available for public inspection. This filing may also be viewed on the Internet at http://www.ferc.fed.us/online/rims.htm (call 202–208–2222 for assistance). Beginning November 1, 2000, comments and protests may be filed electronically via the internet in lieu of paper. See, 18 CFR 385.2001(a)(1)(iii) and the instructions on the Commission's web site at *http://www.ferc.fed.us/efi/doorbell.htm.*

David P. Boergers,

Secretary.

[FR Doc. 00–27999 Filed 10–31–00; 8:45 am]

BILLING CODE 6717–01–M

[1] Regional Transmission Organizations, Order No. 2000, 65 Fed. Reg. 809 (January 6, 2000), FERC Stats. & Regs. 31,089 (1999), *order on reh'g,* Order No. 2000–A, 65 Fed. Reg. 12,088 (March 8, 2000), FERC Stats. & Regs. 31,092 (2000).

DEPARTMENT OF ENERGY

Federal Energy Regulatory Commission

[Docket No. CP01–12–000]

El Paso Natural Gas Company; Notice of Application

October 26, 2000.

Take notice that on October 16, 2000, El Paso Natural Gas Company (El Paso), Post Office Box 1492, El Paso, Texas 79978, filed in Docket No. CP01–12–000 an application pursuant to Sections 7(c) and (b) of the Natural Gas Act for a certificate of public convenience and necessity to relocate and replace 6.88 miles of 16-inch diameter pipe on Line No. 2039 with 24-inch pipe, and to relocate the existing Southern Avenue Meter Station located in Maricopa County, Arizona. In addition, El Paso requests permission and approval to abandon the replaced 16-inch diameter Line No. 2039 facilities and four miscellaneous tap facilities currently located on Line No. 2039, all as more fully set forth in the application which is on file with the Commission and open to public inspection. This filing may be viewed on the web at *http://www.ferc.fed.us./online/rims.htm* (call (202) 208–2222 for assistance).

El Paso states that tremendous residential and commercial growth in the West Phoenix area and its environs has raised serious issues relating to right-of-way encroachment and Department of Transportation (DOT) compliance. In response to these issues, El Paso states that it will relocate 6.88 miles of Line No. 2039 currently located at Elliot Road and 43rd Avenue in Maricopa County, Arizona, to a location that is east of the existing route. El Paso states that the increase in residential and commercial growth in the West Phoenix area has also prompted an increased need for the delivery of natural gas from Line No. 2039. It is stated that Arizona Public Service Company (APS) has requested El Paso to deliver an additional 95 MMcf per day of natural gas to its West Phoenix Power Plant located in Maricopa County, Arizona. It is stated that in order to accommodate APS' load growth requirement, the relocated Line No. 2039 will consist of 24-inch diameter pipe instead of 16-inch diameter pipe. In addition, it is stated that El Paso will relocate the existing Southern Avenue meter Station currently located on the existing 16-inch diameter Line No. 2039 to a new location along the proposed 24-inch alignment. El Paso states that once Line No. 2039 has been relocated, replaced and in service, El Paso will abandon in place and by removal, the replaced 16-inch Line No. 2039 pipeline facilities and four miscellaneous tap facilities currently located on Line No. 2039.

El Paso states that the estimated cost of the proposed project is $6,579,988. El Paso states that the project will be financed with the use of internally generated funds and that APS has agreed to reimburse El Paso 50 percent of the cost of pipe relocation and replacement of the 6.88 miles of Line No. 2039. El Paso states that it will continue to charge its existing Part 284 rates for transportation. El Paso further states that the transportation rates to existing customers currently being served through Line No. 2039 will not change as a result of this project.

Any questions regarding the application should be directed to A.W. Clark, Vice President, El Paso Natural Gas Company at (915) 496–2600, Post Office Box 1492, El Paso, Texas 79978.

Any person desiring to be heard or to make any protest with reference to said application should on or before November 16, 2000, file with the Federal Energy Regulatory Commission, 888 First Street, N.E., Washington, D.C. 20426, a motion to intervene or a protest in accordance with the requirements of the Commission's Rules of Practice and Procedure (18 CFR 385.214 or 385.211) and the Regulations under the Natural Gas Act (18 CFR 157.10). All protests filed with the Commission will be considered by it in determining the appropriate action to take but will not serve to make the protestants parties to the proceeding. Any person wishing to become a party to a proceeding or to participate as a party in any hearing therein must file a motion to intervene in accordance with the Commission's Rules. Beginning November 1, 2000, comments and protests may be filed electronically via the internet in lieu of paper. See, 18 CFR 385.2001(a)(1)(iii) and the instructions on the Commission's web site at http://www.ferc.fed.us/efi/doorbell.htm.

Take further notice that, pursuant to the authority contained in and subject to the jurisdiction conferred upon the Federal Energy Regulatory Commission by Sections 7 and 15 of the Natural Gas Act and the Commission's Rules of Practice and Procedure, a hearing will

be held without further notice before the Commission or its designee on this application if no motion to intervene is filed within the time required herein, if the Commission on its own review of the matter finds that a grant of the certificate and permission and approval for the proposed abandonment are required by the public convenience and necessity. If a motion for leave to intervene is timely filed, or if the Commission on its own motion believes that a formal hearing is required, further notice of such hearing will be duly given.

Under the procedure herein provided for, unless otherwise advised, it will be unnecessary for El Paso to appear or be represented at the hearing.

David P. Boergers,

Secretary.

[FR Doc. 00–27995 Filed 10–31–00; 8:45 am]

BILLING CODE 6717–01–M

DEPARTMENT OF ENERGY

Federal Energy Regulatory Commission

[Docket No. CP01–18–000]

Koch Gateway Pipeline Company; Notice of Application

October 26, 2000.

Take notice that on October 24, 2000, Koch Gateway Pipeline Company (Koch Gateway), P.O. Box 1478, Houston, Texas 77251–1478, filed an application in Docket No. CP01–18–000 pursuant to Section 7(b) of the Natural Gas Act (NGA) and Section 157.18 of the Commission's Regulations for permission and approval to abandon by removal approximately 12,497 feet of 16-inch pipeline from Station Number 945+63 to Station Number 820+66 on its Latex-Forth Worth Mainline designated as Index 1 [1] in Harrison County, Texas (SWEPCO Segment), all as more fully set forth in the application on file with the Commission and open to public inspection.

This filing may be viewed on the web at http://www.ferc.fed.us/online/rims.htm (call 202–208–2222 for assistance). Any questions regarding this application should be directed to: Kyle Stephens, director of Certificates, Koch Gateway Pipeline Company, P.O. Box 1478, Houston, Texas, 77251–1478, (713) 544–7309.

Koch Gateway states that the SWEPCO Segment is in direct conflict with an active surface lignite mine operated by Southwestern Electric Power Company (SWEPCO), a division of American Electric Power. Koch Gateway states that in November 1996, Koch Gateway moved the remaining customers from Index 1 to Index 65–2 and idled Index 1 from Station Number 00+0 to Station Number 1190+15 in east Texas. SWEPCO operates an active surface lignite coal mine that provides the lignite fuel for its local electric generation facility, the Pirkey Power Plant, in the vicinity of the east end of Index 1. For the surface area covered by the mine, SWEPCO owns the land in fee or underlying landowners have assigned their surface rights to SWEPCO. Although portions of both Index 1 and Index 65–2 have been relocated to accommodate previous surface mining activities, the mining activities will again be in direct conflict with Index 1 and Index 65–2. Koch Gateway will relocate the active line, Index 65–2,[2] but believes it is in the public convenience and necessity to request abandonment of the SWEPCO Segment of idled line—Index 1—at this time.[3] This will save SWEPCO the relocation costs associated with Index 1. Due to the pending encroachment by the mining operations, Koch Gateway proposes herein to abandon by removal the SWEPCO Segment—Station Number 945+63 to Station Number 820+66—except for two road crossings. To address SWEPCO's Removal Request, Koch Gateway states it needs to begin removal of the SWEPCO Segment by January 1, 2001.

Koch Gateway states it will provide the required landowner notifications and notifications to government entities affected by the proposed project including towns, communities and government agencies. Also, Koch Gateway states that public notice of the proposed project will be published twice in a daily or weekly newspaper of general circulation in each county in which the project is located; and further, copies of the application will be available at a library in a central location in each county in which the project is located.

Any person desiring to be heard or to make any protest with reference to said application should on or before November 16, 2000, file with the Federal Energy Regulatory Commission, Washington, D.C. 20426, a petition to intervene or a protest in accordance with the requirements of the Commission's Rules of Practice and Procedure (18 CFR 385.214 or 385.211) and the Regulations under the Natural Gas Act (18 CFR 157.10). All protests filed with the Commission will be considered by it in determining the appropriate action to be taken but will not serve to make the protestants parties to the proceeding. Any person wishing to become party to a proceeding or to participate as a party in any hearing therein must file a petition to intervene in accordance with the Commission's Rules. Beginning November 1, 2000, comments and protests may be filed electronically via the internet in lieu of paper. See, 18 CFR 385.2001(a)(1)(iii) and the instructions on the Commission's web site at http://www.ferc.fed.us/efi/doorbell.htm.

Take further notice that, pursuant to the authority contained in and subject to the jurisdiction conferred upon the Federal Energy Regulatory Commission by Sections 7 and 15 of the Natural Gas Act and the Commission's Rules of Practice and Procedure, a hearing will be held without further notice before the Commission or its designee on this application if no petition to intervene is filed within the time required herein, if the Commission on its own review of the matter finds that a grant of the certificate is required by the public convenience and necessity. If a petition for leave is timely filed, or if the Commission on its own motion believes that a formal hearing is required, further notice of such hearing will be duly given.

Under the procedure provided for, unless otherwise advised, it will be unnecessary for Koch Gateway to appear or be represented at the hearing.

David P. Boergers,

Secretary.

[FR Doc. 00–27998 Filed 10–31–00; 8:45 am]

BILLING CODE 6717–01–M

[1] Index numbers are Koch Gateway's internal designation for transmission facilities.

[2] To avoid encroachment by SWEPCO on this line currently serving customers, the portion of Index 65–2 from Station Number 249+32 to Station Number 415+64 will be relocated pursuant to 18 C.F.R. Section 157.208(a)(1) under Koch Gateway's blanket certificate authorized in FERC Docket No. CP82–430–000.

[3] Koch Gateway states that it is in the process of preparing an application under Section 7(b) of the Natural Gas Act to abandon the currently idled segments of Index 1 not covered by the immediate application. Koch Gateway is currently negotiating with affected landowners and will file such an application in the near future.

DEPARTMENT OF ENERGY

Federal Energy Regulatory Commission

[Docket No. CP01–16–000]

Northern Natural Gas Company; Notice of Application

October 26, 2000.

Take notice that on October 19, 2000, Northern Natural Gas Company

(Northern), 1111 South 103rd Street, Omaha, Nebraska 68124, filed in Docket No. CP01–16–000 an application pursuant to Section 7(b) of the Natural Gas Act (NGA) for permission and approval to abandon Unit #12, with appurtenances, at the Stevens Co. #2 compressor station located in Stevens County, Kansas, all as more fully set forth in the application which is on file with the Commission and open to public inspection. This filing may be viewed on the web at http://www.ferc.fed.us/online/rims.htm (call 202–208–2222 for assistance).

Specifically, Northern requests authority to abandon and remove Unit #12, as skid-mounted 506 hp rental unit,[1] and appurtenant facilities consisting of suction and discharge piping, control and exhaust equipment, a foundation, fuel metering and similar equipment. Northern states that the unit will be removed and returned to the rental company, and the appurtenant facilities will be disposed of or returned to inventory. Northern asserts that the compressor unit is no longer required due to changes in the operating conditions that have eliminated the need for this compressor unit. Northern also states that the abandonment will not: (1) impact any firm service obligations to its customers; (2) results in the abandonment of service to any of Northern's existing shippers; or (3) adversely effect capacity.

Any questions regarding the application should be directed to Keith L. Petersen, Director, Certificates and Report for Northern, 1111 South 103rd Street, Omaha, Nebraska 68124, at (402) 398–7421 or Michele Winckowski, Senior Regulatory Analyst, at (402) 398–7082.

Any person desiring to be heard or any person desiring to make any protests with reference to said application should on or before November 16, 2000, file with the Federal Energy Regulatory Commission, 888 First Street, N.E., Washington, D.C. 20426, a motion to intervene or a protest in accordance with the requirements of the Commission's Rules of Practice and Procedure (18 CFR 385.211 or 385.214) and the Regulations under the NGA (18 CFR 157.10). All protests filed with the Commission will be considered by it in determining the appropriate action to be taken but will not serve to make the protestants parties to the proceeding. Any person wishing to become a party to a proceeding or to participate as a party in any hearing therein must file a motion to intervene in accordance with the Commission's Rules. Beginning November 1, 2000, comments and protests may be filed electronically via the internet in lieu of paper. See, 18 CFR 385.2001(a)(1)(iii) and the instructions on the Commission's web site at http://www.ferc.fed.us/efi/doorbell.htm.

Take further notice that, pursuant to the authority contained in and subject to the jurisdiction conferred upon the Federal Energy Regulatory Commission by Sections 7 and 15 of the NGA and the Commission's Rules of Practice and Procedures, a hearing will be held without further notice before the Commission or its designee on this application if no motion to intervene is filed within the time required herein, if the Commission on its own review of the matter finds that permission and approval for the proposed abandonment are required by the public convenience and necessity. If a motion for leave to intervene is timely filed, or if the Commission on its own motion believes that a formal hearing is required, further notice of such hearing will be duly given.

Under the procedure herein provided for, unless otherwise advised, it will be unnecessary for Northern to appear or be represented at the hearing.

David P. Boergers,

Secretary.

[FR Doc. 00–27997 Filed 10–31–00; 8:45 am]

BILLING CODE 6717–01–M

[1] This rental compressor unit was installed pursuant to Northern's blanket certificate authority granted by order in Docket No. CP82–401–000 issued on September 1, 1982 (20 FERC ¶ 62,410).

DEPARTMENT OF ENERGY

Federal Energy Regulatory Commission

[Docket No. CP01–13–000]

Southern Natural Gas Company; Notice of Intent To Prepare an Environmental Assessment for the Proposed Albany Compressor Station Project and Request for Comments on Environmental Issues

October 26, 2000.

The staff of the Federal Energy Regulatory Commission (FERC or Commission) will prepare an environmental assessment (EA) that will discuss the environmental impacts of the Albany Compressor Station Project involving the operation of facilities by Southern Natural Gas Company (Southern) in Dougherty County, Georgia.[1] The proposal consists of returning to full time operation an existing backup compressor unit at the Albany Compressor Station. This EA will be used by the Commission in its decision-making process to determine whether the project is in the public convenience and necessity.

A fact sheet prepared by the FERC entitled ''An Interstate Natural Gas Facility On My Land? What Do I Need To Know?'' was attached to the project notice Southern provided to landowners. This fact sheet addresses a number of typically asked questions and how to participate in the Commission's proceedings. It is available for viewing on the FERC Internet website (www.ferc.fed.us).

Summary of the Proposed Project

Southern wants to reinstate a 1,232 horsepower reciprocating compressor unit at the Albany Compressor Station to full time service. At this time the unit is only used as a backup unit that is available in the event other facitlities on the system are taken out of service for maintenance or repair.

The location of the Albany Compressor Station is shown in appendix 1.[2]

Land Requirements for Construction

The compressor unit was installed at the Albany Compressor Station in 1982. No ground disturbance would be required. All activities would be confined to the existing Albany Compressor Station.

The EA Process

The National Environmental Policy Act (NEPA) requires the Commission to take into account the environmental impacts that could result from an action whenever it considers the issuance of a Certificate of Public Convenience and Necessity. NEPA also requires us[3] to discover and address concerns the public may have about proposals. We call this ''scoping''. The main goal of the scoping process is to focus the analysis in the EA on the important environmental issues. By this Notice of Intent, the Commission requests public comments on the scope of the issues it will address in the EA. All comments

[1] Southern's application was filed with the Commission under Section 7 of the Natural Gas Act and Part 157 of the Commission's regulations.

[2] The appendices referenced in this notice are not being printed in the **Federal Register**. Copies are available on the Commission's website at the ''RIMS'' link or from the Commission's Public Reference and Files Maintenance Branch, 888 First Street, NE., Washington, DC 20426, or call (202) 208–1371. For instructions on connecting to RIMS refer to the last page of this notice. Copies of the appendices were sent to all those receiving this notice in the mail.

[3] ''We'', ''us'', and ''our'' refer to the environmental staff of the Office of Energy Projects (OEP).

received are considered during the preparation of the EA. State and local government representatives are encouraged to notify their constituents of this proposed action and encourage them to comment on their areas of concern.

The EA will discuss impacts that could occur as a result of the change in the operation of the Albany Compressor Station. In particular the EA will focus on the changes in noise and air emissions resulting from the increased operation of the compressor unit.

We will also evaluate possible alternatives to the proposed project and make recommendations on how to lessen or avoid impacts on the various resource areas.

Our independent analysis of the issues will be in the EA. Depending on the comments received during scoping process, the EA may be published and mailed to Federal, state, and local agencies, public interest groups, interested individuals, affected landowners, newspapers, libraries, and the Commission's official service list for this proceeding. A comment period will be allotted for review if the EA is published. We will consider all comments on the EA before we make our recommendations to the Commission.

To ensure your comments are considered, please carefully follow the instructions in the public participation section below.

Currently Identified Environmental Issues

Because the compressor unit has already been installed, we have identified only two issues that we think deserve additional attention based on a preliminary review of the proposed facilities and the environmental information provided by Southern. This preliminary list of issues may be changed based on your comments and our analysis.

- Increase in air emissions caused by operating the compressor unit full time.
- Increase in noise from the compressor station.

Public Participation

You can make a difference by providing us with your specific comments or concerns about the project. By becoming a commentor, your concerns will be addressed in the EA and considered by the Commission. You should focus on the potential environmental effects of the proposal, alternatives to the proposal (including alternative locations), and measures to avoid or lessen environmental impact. The more specific your comments, the more useful they will be. Please carefully follow these instructions to ensure that your comments are received in time and properly recorded:

- Send an original and two copies of your letter to: David P. Boergers, Secretary, Federal Energy Regulatory Commission, 888 First St., NE., Room 1A, Washington, DC 20426.
- Label one copy of the comments for the attention of Gas 2.
- Reference Docket No. CP01–13–000.
- Mail your comments so that they will be received in Washington, DC on or before November 27, 2000. Beginning November 1, 2000, comments and protests may be filed electronically via the internet in lieu of paper. See, 18 CFR 385.2001(a)(1)(iii) and the instructions on the Commission's web site at http://www.ferc.fed.us/efi/doorbell.htm.

Becoming an Intervenor

In addition to involvement in the EA scoping process, you may want to become an official party to the proceeding known as an ''intervenor''. Intervenors play a more formal role in the process. Among other things, intervenors have the right to receive copies of case-related Commission documents and filings by other intervenors. Likewise, each intervenor must provide 14 copies of its filings to the Secretary of the Commission and must send a copy of its filings to all other parties on the Commission's service list for this proceeding. If you want to become an intervenor you must file a motion to intervene according to Rule 214 of the Commission's Rules of Practice and Procedure (18 CFR 385.214) (see appendix 2). Only intervenors have the right to seek rehearing of the Commission's decision.

Affected landowners and parties with environmental concerns may be granted intervenor status upon showing good cause by stating that they have a clear and direct interest in this proceeding which would not be adequately represented by any other parties. You do not need intervenor status to have your environmental comments considered.

Additional information about the proposed project is available from the Commission's Office of External Affairs at (202) 208–0004 or on the FERC website (www.ferc.fed.us) using the ''RIMS'' link to information in this docket number. Click on the ''RIMS'' link, select ''Docket #'' from the RIMS Menu, and follow the instructions. For assistance with access to RIMS, the RIMS helpline can be reached at (202) 208–2222.

Similarly, the ''CIPS'' link on the FERC Internet website provides access to the texts of formal documents issued by the Commission, such as orders, notices, and rulemakings. From the FERC Internet website, click on the ''CIPS'' link, select ''Docket #'' from the CIPS menu, and follow the instructions. For assistance with access to CIPS, the CIPS helpline can be reached at (202) 208–2474.

David P. Boergers,

Secretary.

[FR Doc. 00–27996 Filed 10–31–00; 8:45 am]

BILLING CODE 6717–01–M

DEPARTMENT OF ENERGY

Federal Energy Regulatory Commission

[Docket No. ER01–172–000, et al.]

Illinois Power Company, et al.; Electric Rate and Corporate Regulation Filings

October 25, 2000.

Take notice that the following filings have been made with the Commission:

1. Illinois Power Company

[Docket No. ER01–172–000]

Take notice that on October 20, 2000, Illinois Power Company (IP), 500 South 27th Street, Decatur, Illinois 65251–2200, tendered for filing with the Commission Service Agreements for Firm Short-Term Point-To-Point Transmission Service and for Non-Firm Point-To-Point Transmission Service with NRG Power Marketing Inc. (NRG) and with Ameren Energy Marketing Company (Ameren). The Agreements have been entered into pursuant to IP's Open Access Transmission Tariff.

IP requests an effective date of September 25, 2000 for the Agreements with NRG, an effective date of October 2, 2000 for the Agreements with Ameren, and a waiver of the Commission's notice requirement.

IP has served a copy of the filing on NRG and Ameren.

Comment date: November 9, 2000, in accordance with Standard Paragraph E at the end of this notice.

2. Lighthouse Energy Trading Company, Inc.

[Docket No. ER01–174–000]

Take notice that on October 20, 2000, Lighthouse Energy Trading Company, Inc., a South Dakota Corporation, (Lighthouse) petitioned the Commission for acceptance of Lighthouse Rate Schedule FERC No. 1; the granting of certain blanket approvals, including the authority to sell electricity at market-

based rates; and the waiver of certain Commission Regulations.

Lighthouse intends to engage in wholesale electric power and energy purchases and sales as a marketer. Lighthouse is not in the business of generating or transmitting electric power.

Comment date: November 9, 2000, in accordance with Standard Paragraph E at the end of this notice.

3. Northrop Grumman Corporation, Grumman Aerospace Corporation

[Docket No. ER01–176–000]

Take notice that on October 20, 2000, Northrop Grumman Corporation and Grumman Aerospace Corporation tendered for filing Notice of Cancellation of Rate Schedules in the above-referenced proceedings.

Comment date: November 9, 2000, in accordance with Standard Paragraph E at the end of this notice.

4. Montana-Dakota Utilities Co., a division of MDU Resources Group, Inc.

[Docket No. ER01–178–000]

Take notice that on October 20, 2000, Montana-Dakota Utilities Co., a division of MDU Resources Group, Inc. (Montana-Dakota), tendered for filing a revised Exhibit H to a certain July 1, 1988 ''Contract for Electric Service to Montana-Dakota Utilities Co.'', Contract No. 88–BAO–308, between Montana-Dakota and Western Area Power Administration (Western).

Copies of the filing were served on Western and on the interested utility regulatory agencies.

Comment date: November 9, 2000, in accordance with Standard Paragraph E at the end of this notice.

5. PJM Interconnection, L.L.C.

[Docket No. ER01–179–000]

Take notice that on October 20, 2000, PJM Interconnection, L.L.C. (PJM), on behalf of and at the request of Allegheny Electric Cooperative, Inc. (Allegheny), tendered for filing a revised Schedule 7, Schedule 8, and Attachment H–8 to the PJM Open Access Transmission Tariff.

Copies of this filing were served upon all members of PJM, and the state commissions within the PJM control area.

Comment date: November 9, 2000, in accordance with Standard Paragraph E at the end of this notice.

6. New York Independent System Operator, Inc.

[Docket No. ER01–180–000]

Take notice that on October 20, 2000, the New York Independent System Operator, Inc. (NYISO), acting pursuant to Section 205 of the Federal Power Act, filed a proposed amendment to the NYISO's Market Administration and Control Area Services Tariff. The proposed amendment would extend the duration of bid caps in certain NYISO-administered markets until April 30, 2001.

The NYISO has requested that the amendment become effective on October 29, 2000.

A copy of this filing was served upon all parties in Docket No. ER00–3038–000, Docket Nos. ER00–3591–000 and ER00–3591–001, Docket Nos. ER97–1523–000, OA97–470–000 and ER97–4324–000, not consolidated, and on all other parties who have executed Service Agreements under the NYISO's Open Access Transmission Tariff or Market Administration and Control Area Services Tariff.

Comment date: November 9, 2000, in accordance with Standard Paragraph E at the end of this notice.

7. New York Independent System Operator, Inc.

[Docket No. ER01–181–000]

Take notice that on October 20, 2000, the New York Independent System Operator, Inc. (NYISO), acting pursuant to Section 206 of the Federal Power Act at the direction of the NYISO's independent Board of Directors (NYISO Board), tendered for filing a proposed amendment to the NYISO's Market Administration and Control Area Services Tariff. The proposed amendment would extend the duration of bid caps in certain NYISO-administered markets until such time as the NYISO implements a superior market protective mechanism.

A copy of this filing was served upon all parties in Docket No. ER00–3038–000, Docket Nos. ER00–3591–000 and ER00–3591–001, Docket Nos. ER97–1523–000, OA97–470–000 and ER97–4324–000, not consolidated, and on all other parties who have executed Service Agreements under the NYISO's Open Access Transmission Tariff or Market Administration and Control Area Services Tariff.

Comment date: November 9, 2000, in accordance with Standard Paragraph E at the end of this notice.

8. Mexican Business Trust No. 111076–2, Banco Nacional de Mexico, S.A., Institucion de Banca Multiple, Division Fiduciaria, Grupo Financiero, Banamex-Accival (as Trustee under Mexican Business Trust No. 111076–2) Termoelectrica Penoles, S. de R.L. de C.V.

[Docket No. EG01–9–000]

Take notice that on October 20, 2000 Mexican Business Trust No. 111076–2 (the Trust); Banco Nacional de Mexico, S.A., Institucion de Banca Multiple, Division Fiduciaria, Grupo Financiero Banamex-Accival (the Trustee under Mexican Business Trust No. 111076–2); and Termoelectrica Penoles, S. de R.L. de C.V. (TEP and together with the Trust and Trustee, Applicants), Edificio Corporativo BAL, 4 Piso Moliere 222, Colonia Los Morales-Palmas 11540 Mexico, D.F., Mexico, filed with the Federal Energy Regulatory Commission an application for determination of exempt wholesale generator status pursuant to Part 365 of the Commission's regulations.

The Trust states that it is a trust organized under the laws of Mexico, the Trustee, for the purposes of acting as trustee to the Trust only, states that it is a company organized under the laws of Mexico, and TEP states that it is a limited liability company organized under the laws of Mexcio and that they will own and/or operate a nominally rated 260 MW circulating fluidized bed petroleum coke power plant and auxiliary facilities located in Tamuin, San Luis Potosi, Mexico.

Comment date: November 15, 2000, in accordance with Standard Paragraph E at the end of this notice. The Commission will limit its consideration of comments to those that concern the adequacy or accuracy of the application.

Standard Paragraphs

E. Any person desiring to be heard or to protest such filing should file a motion to intervene or protest with the Federal Energy Regulatory Commission, 888 First Street, N.E., Washington, D.C. 20426, in accordance with Rules 211 and 214 of the Commission's Rules of Practice and Procedure (18 CFR 385.211 and 385.214). All such motions or protests should be filed on or before the comment date. Protests will be considered by the Commission in determining the appropriate action to be taken, but will not serve to make protestants parties to the proceeding. Any person wishing to become a party must file a motion to intervene. Copies of these filings are on file with the Commission and are available for public inspection. This filing may also be

viewed on the Internet at http://www.ferc.fed.us/online/rims.htm (call 202–208–2222 for assistance). Beginning November 1, 2000, comments and protests may be filed electronically via the internet in lieu of paper. See, 18 CFR 385.2001(a)(1)(iii) and the instructions on the Commission's web site at *http://www.ferc.fed.us/efi/doorbell.htm.*

David P. Boergers,

Secretary.

[FR Doc. 00–27994 Filed 10–31–00; 8:45 am]

BILLING CODE 6717–01–P

ENVIRONMENTAL PROTECTION AGENCY

[FRL–6894–3]

Agency Information Collection Activities: Proposed Collection; Comment Request; National Oil and Hazardous Substances Pollution Contingency Plan, Subpart J

AGENCY: Environmental Protection Agency (EPA).

ACTION: Notice.

SUMMARY: In compliance with the Paperwork Reduction Act (44 U.S.C. 3501 *et seq.*), this document announces that EPA is planning to submit the following continuing Information Collection Request (ICR) to the Office of Management and Budget (OMB): National Oil and Hazardous Substances Pollution Contingency Plan-Subpart J, EPA ICR 1664.04, OMB Control Number 2050–0141, expiring November 30, 2000. The ICR describes the nature of the information collection and its expected burden and cost; where appropriate and its expected burden and cost; where appropriate, it includes the actual data collection instrument.

DATES: Comments must be submitted on or before December 1, 2000.

ADDRESSES: Send comments, referencing EPA ICR No. 1664.04 and OMB Control No. 2050–0141, to the following addresses: Sandy Farmer, U.S. Environmental Protection Agency, Collection Strategies Division (Mail Code 2822), 1200 Pennsylvania Avenue, NW., Washington, DC 20460; and to Office of Information and Regulatory Affairs, Office of Management and Budget (OMB), Attention: Desk Officer for EPA, 725 17th Street, NW., Washington, DC 20503.

FOR FURTHER INFORMATION CONTACT: For a copy of the ICR contact Sandy Farmer at EPA by phone at (202) 260–2740, by email at *farmer.sandy@epamail.epa.gov,* or download off the Internet at *http://www.epa.gov/icr* and refer to EPA ICR No. 1664.04. For technical questions about the ICR contact William ''Nick'' Nichols, (703) 603–9918.

SUPPLEMENTARY INFORMATION:

Title: National Oil and Hazardous Substances Pollution Contingency Plan, Subpart J (NCP) (OMB Control No. 2050–0141; EPA ICR No.1664.04), expiring November 30, 2000. This is a renewal.

Abstract: Subpart J of the NCP allows and regulates the use of chemical and biological oil spill cleanup and control agents. The information collected is supplied by the manufacturer of such products. This information and data are then analyzed by EPA to determine the appropriateness, and under which category, the product may be listed on the NCP Product Schedule. This product data is critical for EPA to obtain in order to assure that effectiveness and toxicity data for these products is available to the oil spill community, to use them legally and effectively. Responses to the collection of information are mandatory if EPA determines that the products specifications require its listing under subpart J (40 CFR 300.5a Definitions), however, manufacturers volunteer to have their product analyzed. The authority to review and use a product is 40 CFR 300.910. Confidentiality of data, ingredients, and other proprietary information for the products is maintained by EPA. Manufacturers may use any certified lab in the U.S. to test their products effectiveness and toxicity. The cost of such test range from $1,000 to $5,000 per test. The process to have a product listed takes at least 30 days, but no longer than 60 days, depending on the accuracy and completeness of the product information package provided to EPA by the manufacturer. Due to the technical and graphical data required to be listed, electronic submissions are not accepted.

An agency may not conduct or sponsor, and a person is not required to respond to, a collection of information unless it displays a currently valid OMB control number. The OMB control numbers for EPA's regulations are listed in 40 CFR part 9 and 48 CFR Chapter 15. The **Federal Register** document required under 5 CFR 1320.8(d), soliciting comments on this collection of information was published on April 17, 2000 (65 FR 20451). No comments were received.

Burden Statement: The annual public reporting and recordkeeping burden for this collection is estimated to average 27 hours per response. Burden means the total time, effort, or financial resources expended by persons to generate, maintain, retain, or disclose or provide information to or for a Federal agency. This includes the time needed to review instructions; develop, acquire, install, and utilize technology and systems for the purposes of collecting, validating, and verifying information, processing and maintaining information, and disclosing and providing information; adjust the existing ways to comply with any previously applicable instructions and requirements; train personnel to be able to respond to a collection of information; search data sources; complete and review the collection of information; and transmit or otherwise disclose the information.

Respondents/Affected Entities: Manufacturers of oil spill dispersants and other chemicals.

Estimated Number of Respondents: 28.

Frequency of Response: As needed.

Estimated Total Annual Hour Burden: 826.

Estimated Total Annualized Capital, O&M Cost Burden: 150,000.

Send comments on the Agency's need for this information, the accuracy of the provided burden estimates, and any suggested methods for minimizing respondent burden, including through the use of automated collection techniques to the addressses listed above. Please refer to EPA ICR No. 1664.04 and OMB Control No. 2050–0141 in any correspondence.

Dated: October 23, 2000.

Oscar Morales,

Director, Collection Strategies Division.

[FR Doc. 00–28010 Filed 10–31–00; 8:45 am]

BILLING CODE 6560–50–P

ENVIRONMENTAL PROTECTION AGENCY

[FRL–6894–4]

Agency Information Collection Activities: Proposed Collection; Comment Request; U.S. Exports and Imports of Hazardous Wastes RCRA ICR No. 1647.02

AGENCY: Environmental Protection Agency (EPA).

ACTION: Notice.

SUMMARY: In compliance with the Paperwork Reduction Act (44 U.S.C. 3501 *et seq.*), this document announces that EPA is planning to submit the following proposed and continuing Information Collection Request (ICR) to the Office of Management and Budget (OMB): U.S. Exports and Imports of Hazardous Wastes, EPA Docket Number:

F–2000–IEIP–FFFFF. ICR Number: 1647.02. Before submitting the ICR to OMB for review and approval, EPA is soliciting comments on specific aspects of the proposed information collection as described below.

DATES: Comments must be submitted on or before January 2, 2001.

ADDRESSES: Commenters must send an original and two copies of their comments referencing docket number F–2000–IEIP–FFFFF to: (1) If using regular US Postal Service mail: RCRA Docket Information Center, Office of Solid Waste (5305G), U.S. Environmental Protection Agency Headquarters (EPA, HQ), 1200 Pennsylvania Avenue, NW, Washington, DC 20460–0002, or (2) if using special delivery, such as overnight express service: RCRA Docket Information Center (RIC), Crystal Gateway One, 1235 Jefferson Davis Highway, First Floor, Arlington, VA 22202. Comments may also be submitted electronically through the Internet to: rcra-docket@epa.gov. Comments in electronic format should also be identified by the docket number F–2000–IEIP–FFFFF and must be submitted as an ASCII file avoiding the use of special characters and any form of encryption.

Commenters should not submit electronically any confidential business information (CBI). An original and two copies of CBI must be submitted under separate cover to: RCRA CBI Document Control Officer, Office of Solid Waste (5305W), U.S. EPA, 401 M Street, SW, Washington, DC 20460–0002.

Public comments and supporting materials are available for viewing in the RCRA Information Center (RIC), located at Crystal Gateway I, First Floor, 1235 Jefferson Davis Highway, Arlington, VA. The RIC is open from 9 a.m. to 4 p.m., Monday through Friday, excluding federal holidays. To review docket materials, it is recommended that the public make an appointment by calling 703–603–9230. The public may copy a maximum of 100 pages from any regulatory docket at no charge. Additional copies cost $0.15/page.

The ICR is available on the Internet at http://www.epa.gov/epaoswer/hazwaste/exp-imp/icr.htm.

The official record for this action will be kept in paper form. Accordingly, EPA will transfer all comments received electronically into paper form and place them in the official record, which will also include all comments submitted directly in writing. EPA responses to comments, whether the comments are written or electronic, will be in a notice in the **Federal Register**. EPA will not immediately reply to commenters electronically other than to seek clarification of electronic comments that may be garbled in transmission or during conversion to paper form, as discussed above.

FOR FURTHER INFORMATION CONTACT: For general information, contact the RCRA Hotline at 800–424–9346 or TDD 800–553–7672 (hearing impaired). In the Washington, DC, metropolitan area, call 703–412–9810 or TDD 703–412–3323. For more detailed information on specific aspects of this rulemaking, contact Patricia Whiting, Office of Solid Waste, 5304W, U.S. Environmental Protection Agency, 401 M Street, SW, Washington, DC 20460–0002, at 703–308–8421, Whiting.Patricia@epamail.gov.

SUPPLEMENTARY INFORMATION:

Affected entities: Entities potentially affected by this action are those which export hazardous waste from or import hazardous waste to the U.S.

Title: U.S. Exports and Imports of Hazardous Wastes, EPA ICR No. 1647.02. expiring 3/31/01.

Abstract: Authority to promulgate this rule is found in sections 2002(a) and 3017(a)(2) and (f) of the Solid Waste Disposal Act, as amended by the Resource Conservation and Recovery Act, and as amended by the Hazardous and Solid Waste Amendments, 42 U.S.C. 6901 *et seq.* The Organization for Economic and Cooperative Development (OECD) Decision C(92)39 is considered legally binding on the United States under Articles 5(a) and 6(2) of the OECD Convention, 12 U.S.T. 1728. In addition, the OECD Decision and EPA's rule implementing the OECD Decision, 40 CFR part 262, subpart H (61 FR 16290–16316, April 12, 1996) impose requirements on U.S. exporters and importers of hazardous waste for recovery to and from OECD member countries. EPA also imposes requirements on U.S. exports and imports of hazardous wastes to and from other countries at 40 CFR part 262, subpart E for exports and at subpart F for imports (51 FR 28664, August 8, 1986). The Office of Enforcement and Compliance Assurance, U.S. EPA, uses the information provided by each U.S. exporter and U.S. importer to determine compliance with the applicable RCRA regulatory provisions. In addition, the information will be used to determine the number, origin, destination, and type of exports from and imports to the U.S. for tracking purposes and for reporting to the OECD. This information also will be used to assess the efficiency of the program.

An agency may not conduct or sponsor, and a person is not required to respond to, a collection of information unless it displays a currently valid OMB control number. The OMB control numbers for EPA's regulations are listed in 40 CFR part 9 and 48 CFR Chapter 15. In requesting to continue this information collection, the EPA would like to solicit comments to:

(i) Evaluate whether the proposed collection of information is necessary for the proper performance of the functions of the agency, including whether the information will have practical utility;

(ii) Evaluate the accuracy of the agency's estimate of the burden of the proposed collection of information, including the validity of the methodology and assumptions used;

(iii) Enhance the quality, utility, and clarity of the information to be collected; and

(iv) Minimize the burden of the collection of information on those who are to respond, including through the use of appropriate automated electronic, mechanical, or other technological collection techniques or other forms of information technology, *e.g.*, permitting electronic submission of responses.

Burden Statement: The annual U.S. exporter burden for this collection is estimated to average 10.23 hours per exporter. The annual U.S. importer burden for this collection is estimated to average 1.3 hours per importer. This amounts to a total annual cost of $441,360 for exporters and $38,582 for importers. These estimates represent the burden associated with the RCRA export and import requirements. Calculation of these estimates is based on the following numbers:

Exporters: 816.

Importers: 746.

Annual Export Shipments: 25,000.

Annual Import Shipments: 2,984.

The number of export notifications is equal to the number of exporters (816) and the number (and frequency per year) of tracking documents corresponds to the number of annual export and import shipments (25,000 and 2,984, respectively). These estimates take into account all aspects of the information collection, including the time necessary for new entrants to obtain and read the regulations and assess their applicability; time to complete a notification of intent to export; time to complete a tracking document and to transmit copies of the tracking document. Burden means the total time, effort, or financial resources expended by persons to generate, maintain, retain, or disclose or provide information to or for a Federal agency. This includes the time needed to review instructions; develop, acquire, install, and utilize

technology and systems for the purposes of collecting, validating, and verifying information, processing and maintaining information, and disclosing and providing information; adjust the existing ways to comply with any previously applicable instructions and requirements; train personnel to be able to respond to a collection of information; search data sources; complete and review the collection of information; and transmit or otherwise disclose the information.

Dated: October 26, 2000.

Matthew Hale,

Acting Director, Office of Solid Waste.

[FR Doc. 00–28016 Filed 10–31–00; 8:45 am]

BILLING CODE 6560–50–P

ENVIRONMENTAL PROTECTION AGENCY

[FRL–6894–2]

Agency Information Collection Activities; EPA ICR No. 1250.06; Submission to OMB; Additional Opportunity To Comment

AGENCY: Environmental Protection Agency (EPA).

ACTION: Notice.

SUMMARY: In compliance with the Paperwork Reduction Act (44 U.S.C. 3501 *et seq.*), this document announces that the Information Collection Request (ICR) entitled: *Request for Contractor Access to TSCA Confidential Business Information* (EPA ICR No. 1250.06; OMB Control No. 2070–0075), has been forwarded to the Office of Management and Budget (OMB) for review and approval pursuant to the OMB procedures in 5 CFR 1320.12. The ICR, which is abstracted below, describes the nature of the information collection and its estimated cost and burden. The **Federal Register** notice required under 5 CFR 1320.8(d), announcing the Agency's intent to seek the renewal of this ICR and providing a 60-day opportunity for public comment on the ICR and its renewal, was issued on July 19, 2000 (65 FR 44779). EPA did not receive any comments on the ICR or its renewal during the comment period.

DATES: Additional comments may be submitted on or before December 1, 2000.

ADDRESSES: Send comments, referencing EPA ICR No. 1250.06 and OMB Control No. 2070–0075, to the following addresses: (1) Sandy Farmer, U.S. Environmental Protection Agency, Collection Strategies Division (Mail Code: 2822), 1200 Pennsylvania Avenue, NW., Washington, DC 20460; and to: (2) Office of Information and Regulatory Affairs, Office of Management and Budget (OMB), Attention: Desk Officer for EPA, 725 17th Street, NW, Washington, DC 20503.

FOR FURTHER INFORMATION CONTACT: Sandy Farmer at EPA phone on 202–260–2740, by e-mail at: *''farmer.sandy@epa.gov,''* or by regular mail at the address indicated below. You may also access the ICR at *http://www.epa.gov/icr/icr.htm.* Please refer to EPA ICR No. 1250.06.

SUPPLEMENTARY INFORMATION:

ICR Title: Request for Contractor Access to TSCA Confidential Business Information (EPA ICR No.: 1250.60; OMB Control No.: 2070–0075).

Review Requested: This is a request under 5 CFR 1320.12 to renew an existing ICR currently scheduled to expire on December 31, 2000. Under 5 CFR 1320.10(e)(2), the Agency may continue to conduct or sponsor the collection of information while the submission is pending review at OMB.

Abstract: Certain employees of companies working under contract to EPA require access to confidential business information (CBI) collected under the authority of the Toxic Substances Control Act (TSCA) in order to perform their official duties. The Office of Pollution Prevention and Toxics (OPPT), which is responsible for maintaining the security of TSCA CBI, requires that all individuals desiring access to TSCA CBI obtain and annually renew official clearance to TSCA CBI. As part of the process for obtaining TSCA CBI clearance, OPPT requires certain information about the contracting company and about each contractor employee requesting TSCA CBI clearance, primarily the name, Social Security Number and identification badge number of the employee, the type of TSCA CBI clearance requested, the justification for such clearance, and the signature of the employee to an agreement with respect to access to and use of TSCA CBI.

Responses to the collection of information are voluntary, but failure to provide the requested information will prevent a contractor employee from obtaining clearance to TSCA CBI. EPA will observe strict confidentiality precautions with respect to the information collected on individual employees, based on the Privacy Act of 1974, as outlined in the ICR and in the collection instrument.

Burden Statement: The annual public reporting burden for this collection of information is estimated to average 1.56 hours per response for an estimated 432 respondents making one or more submissions of information annually. According to the PRA, ''burden'' means the total time, effort, or financial resources expended by persons to generate, maintain, retain, or disclose or provide information to or for a Federal agency. For this collection it includes the time needed to review instructions; develop, acquire, install and utilize technology and systems for the purposes of collecting, validating and verifying information, processing and maintaining information, and disclosing and providing information; adjust the existing ways to comply with any previously applicable instructions and requirements; train personnel to be able to respond to a collection of information; search data sources; complete and review the collection of information; and transmit or otherwise disclose the information.

An Agency may not conduct or sponsor, and a person is not required to respond to a collection of information that is subject to approval under the Paperwork Reduction Act, unless it displays a currently valid OMB control number. The OMB control numbers for EPA's information collections appear as part of the collection instruments (*i.e.,* form or instructions), in the **Federal Register** notices for related rulemaking and ICR notices, and, if the collection is contained in a regulation, in a table of OMB approval numbers in 40 CFR part 9.

The ICR provides a detailed explanation of the burden and cost estimates for this ICR, which are only briefly summarized here:

Respondents/Affected Entities: Entities potentially affected by this action are companies working under contract to the Federal government whose employees need access to TSCA CBI, and employees of such companies.

Estimated No. of Potential Respondents: 432.

Estimated Number of Responses per Respondent: One, per occasion.

Frequency of Collection: On occasion.

Estimated Total Annual Burden: 675 hours.

Estimated Total Annual Non-labor Costs: $0.

Changes in the ICR Since the Last Approval: There is a decrease of 139 hours (from 814 hours to 675 hours) in the total estimated respondent burden from that currently in the OMB inventory. This decrease reflects a lower estimate of the number of employees at contracting firms that need to obtain clearance to access TSCA CBI.

According to the procedures prescribed in 5 CFR 1320.12, EPA has submitted this ICR to OMB for review and approval. Any comments related to

the renewal of this ICR should be submitted within 30 days of this notice, as described above.

Dated: October 23, 2000.

Oscar Morales,

Director, Collection Strategies Division.

[FR Doc. 00–28011 Filed 10–31–00; 8:45 am]

BILLING CODE 6560–50–P

ENVIRONMENTAL PROTECTION AGENCY

[FRL–6894–1]

Agency Information Collection Activities OMB Responses

AGENCY: Environmental Protection Agency (EPA).

ACTION: Notices.

SUMMARY: This document announces the Office of Management and Budget's (OMB) responses to Agency clearance requests, in compliance with the Paperwork Reduction Act (44 U.S.C. 3501 *et seq.*). An agency may not conduct or sponsor, and a person is not required to respond to, a collection of information unless it displays a currently valid OMB control number. The OMB control numbers for EPA's regulations are listed in 40 CFR part 9 and 48 CFR Chapter 15.

FOR FURTHER INFORMATION CONTACT: Sandy Farmer at 260–2740, or email at *Farmer.sandy@epa.gov,* and please refer to the appropriate EPA Information Collection Request (ICR) Number.

SUPPLEMENTARY INFORMATION:

OMB Responses to Agency Clearance Requests

OMB Approvals

EPA ICR No. 1381.06; Recordkeeping and Reporting Requirements for Solid Waste Disposal Facilities and Practices; in 40 CFR part 258; was approved 08/28/2000; OMB No. 2050–0122; expires 08/31/2003.

EPA ICR No. 1630.06; Amendment of the Oil Pollution Act Facility Response Plan requirements; in 40 CFR part 112; was approved 08/11/2000; OMB No. 2050–0135; expires 08/31/2003.

EPA ICR No. 1712.03; NESHAP for Shipbuilding and Ship Repair Facilities (Surface Coating); in 40 CFR part 63, subpart II; was approved 08/04/2000; OMB No. 2060–0330; expires 08/31/2003.

EPA ICR No. 0877.07; Environmental Radiation Ambient Monitoring System (ERAMS); was approved 08/02/2000; OMB No. 2060–0015; expires 08/31/2003.

EPA ICR No. 1695.06; Non-Road Spark-Ignition Engines At or Below 19 Kilowatts for Emission Certification and the Averaging, Banking, and Trading Program; in 40 CFR part 90, subpart C; was approved 08/03/2000; OMB No. 2060–0338; expires 11/30/2000.

EPA ICR No. 1939.01; Resource Conservation and Recovery Act (RCRA) Corrective Action Information Request; was approved 08/02/2000; OMB No. 2050–0170; expires 02/28/2002.

EPA ICR No. 1249.06; Recordkeeping for Certified Applicators Using 1080 Collars for Livestock Protection; was approved 09/05/2000; OMB No. 2070–0074; expires 09/30/2003.

EPA ICR No. 0276.11; Application for Experimental Use Permit (EUP) to Ship and Use a Pesticide for Experimental Purposes Only; in 40 CFR part 172; was approved 09/05/2000; OMB No. 2070–0040; expires 09/30/2003.

EPA ICR No. 1353.06; Land Disposal Restrictions No-Migration Variance; in 40 CFR 268.6; was approved 09/08/2000; OMB No. 2050–0062; expires 09/30/2003.

EPA ICR No. 1917.01; Indoor Air Quality Practices in Large Buildings Survey; was approved 09/08/2000; OMB No. 2060–0436; expires 09/30/2003.

EPA ICR No. 0229.13; Standards for the Use or Disposal of Sewage Sludge; in 40 CFR parts 122–125 and 503; was approved 09/21/2000; OMB No. 2040–0004; expires 09/30/2001.

Short Term Extensions

EPA ICR No. 1722.02; Control of Air Pollution, Emission Standards for New Gasoline Spark-Ignition Marine Engines; in 40 CFR part 91, subpart B, C, D, and E; OMB No. 2060–0321; on 07/31/2000 OMB extended the expiration date through 12/31/2000.

EPA ICR No. 1761.02; Regulations for a Voluntary Emissions Standards Program Applicable to Manufactures of Light-Duty Vehicles and Trucks Beginning in Model Year 1977; OMB No. 2060–0345; on 07/31/2000 OMB extended the expiration date through 01/31/2001.

EPA ICR No. 0010.08; Importation Requirements for Importation of Nonconforming Vehicles; in 40 CFR part 85 and 40 CFR part 89; OMB No. 2060–0095; on 08/04/2000 OMB extended the expiration date through 11/30/2000.

EPA ICR No. 1673.02; Reporting and Recordkeeping Requirements for Importation of Nonconforming Non-road Small Spark Ignition Engines; in 40 CFR part 85, subparts P and R and 40 CFR parts 89 and 90; OMB No. 2060–0294; on 08/04/2000 OMB extended the expiration date through 11/30/2000.

EPA ICR No. 1683.02; NSPS for Primary Aluminum Reduction Plants, Recordkeeping and Reporting; in 40 CFR 60.192, 60.194, and 60.195; OMB No. 2060–0031; on 08/10/2000 OMB extended the expiration date through 11/30/2000.

EPA ICR No. 1604.05; NSPS for Secondary Brass and Brass and Bronze Production Plants, Recordkeeping and Reporting; in 40 CFR 60.133, 60.166, 60.176, 60.186, 60.195, and 60.266; OMB No. 2060–0110; on 08/10/2000 OMB extended the expiration date through 11/30/2000.

EPA ICR No. 1049.08; Notification of Episodic Releases of Oil and Hazardous Substances; in 40 CFR parts 110, 117, and 302; OMB No. 2050–0046; on 08/15/2000 OMB extended the expiration date through 02/28/2001.

EPA ICR No. 1664.03; National Oil and Hazardous Substances Pollution Contingency Plan; in 40 CFR part 300, subpart J; on 08/15/2000 OMB extended the expiration date through 11/30/2000.

EPA ICR No. 1135.06; NSPS for Magnetic Tape Coating Facilities; in 40 CFR part 60, subpart SSS; OMB No. 2060–0171; on 08/16/2000 OMB extended the expiration date through 11/30/2000.

EPA ICR No. 1816.01; State Source Water Assessment and Protection Programs; OMB No. 2040–0197; on 08/21/2000 OMB extended the expiration date through 12/31/2000.

EPA ICR No. 0184.05; Vehicle Emission Control Defect Survey Questionnaire; OMB No. 2060–0047; on 08/28/2000 OMB extended the expiration date through 11/30/2000.

EPA ICR No. 0282.10; Emission Defect Information and Voluntary Emission Recall Report; in 40 CFR 90.800, 90.802, and 90.804; OMB No. 2060–0048; on 08/31/2000 OMB extended the expiration date through 12/31/2000.

EPA ICR No. 0116.05; Emission Control System Performance Warranty Regulations and Voluntary Aftermarket Part Certification Program; in 40 CFR part 85, subpart V; OMB No. 2060–0060; on 08/31/2000 OMB extended the expiration date through 11/30/2000.

EPA ICR No. 1797.01; NSPS for Petroleum Storage Liquid Vessels; in 40 CFR part 60, subpart K; OMB No. 2060–0009; on 08/31/2000 OMB extended the expiration date through 11/30/2000.

EPA ICR No. 1427.05; National Pollutant Discharge Elimination System (NPDES); in 40 CFR parts 122, 123, 124, and 125; OMB No. 2040–0110; on 09/11/2000 OMB extended the expiration date through 11/30/2000.

EPA ICR No. 1000.06; Polychlorinated Biphenyls (PCBs) Used in Electrical Equipment; OMB No. 2070–0003; on 09/11/2000 OMB extended the expiration date through 03/31/2001.

EPA ICR No. 0994.06; Beach Closing Survey Report on the Great Lakes; OMB No. 2090–0003, on 09/11/2000 OMB extended the expiration date through 03/31/2001.

EPA ICR No. 1810.01; Obtaining Unbilled Grant Expenses from Grant Recipients at Year-End; OMB No. 2030–0037; on 09/14/2000 OMB extended the expiration date through 03/31/2001.

EPA ICR No. 0234.06; Performance Evaluation Studies on Water and Wastewater Laboratories; OMB No. 2080–0021; on 09/15/2000 OMB extended the expiration date through 12/31/2000.

EPA ICR No. 1680.02; Combined sewer Overflow Policy; OMB No. 2040–0170; on 09/15/2000 OMB extended the expiration date through 12/31/2000.

EPA ICR No. 1230.09; Prevention of Significant Deterioration Non-Attainment Area New Source Review; in 40 CFR parts 51 and 52; OMB No. 2060–0003; on 09/21/2000 OMB extended the expiration date through 03/31/2001.

Comments Filed

EPA ICR No.1948.01; National Primary Drinking Water Regulations: Arsenic and Clarifications to Compliance and New Source Contaminants Monitoring; in 40 CFR 141.23; on 09/20/2000 OMB filed comment.

EPA ICR No. 1973.01; Cooling Water Intake Structures New Facility (Proposed Rule); in 40 CFR 122.2, 122.29(b), 40 CFR 125.83 and 125.81; on 09/20/2000 OMB filed comment.

EPA ICR No. 1928.01; Proposed Long Term 1 Enhanced Surface Water Treatment and Filter Backwash Rule (LT1FBR); in 40 CFR part 141, subparts C, D, and H, 40 CFR part 142, subpart B; on 09/21/2000 OMB filed comment.

EPA ICR No. 1944.01; Baseline Standards and Best Management Practices for the Coal Mining Point Category—Coal Remining Subcategory and Western Alkaline Coal Mining Subcategory; in 40 CFR part 434; on 09/21/2000 OMB filed comment.

EPA ICR No. 1934.01; Proposed Ground Water Rule; in section 1412(b); on 09/21/2000 OMB filed comment.

EPA ICR No. 0370.17; Proposed Revision of Federal UIC Requirements for Class 1 Municipal Wells in Florida; in 40 CFR parts 144 and 146; OMB No. 2040–0042; on 09/21/2000 OMB filed comment.

EPA ICR No. 1953.01; Best Management Practices Alternatives, Effluent Limitations Guidelines and Standards, Oil and Gas Extraction Point Source Category; in 40 CFR part 435; on 09/21/2000 OMB filed comment.

Actions Withdrawn

EPA ICR No. 1909.01; Assess Compliance with EPCRA Section 312 Reporting Requirements; on 08/23/2000 EPA withdrew this collection from OMB review.

EPA ICR No. 1619.04; EPA Indoor Environmental Quality Questionnaire; OMB No. 2060–0244; on 09/08/2000 EPA withdrew this collection from OMB review.

EPA ICR No. 1064.09, NSPS for Automobile and Light Duty Truck Surface Coating Operations; in 40 CFR part 63, subpart MM; OMB No. 2060–0034; on 09/22/2000 EPA withdrew this collection from OMB review.

Notice of Transfer

EPA ICR No. 1773.02; New and Amended Reporting and Recordkeeping Requirements for NESHAP from Hazardous Waste Combustors; in 40 CFR part 63, subpart EEE; on 08/04/2000 OMB No. 2060–0349; (Air and Radiation); was transferred to OMB No. 2050–0171 (Solid Waste and Emergency Response).

EPA ICR No. 1797.01; NSPS for Petroleum Storage Liquid Vessels; in 40 CFR part 60, subpart K; OMB No. 2020–0009; (Office of Enforcement and Compliance Assurance); was transferred to OMB No. 2060–0442; (Office of Air and Radiation).

Notice of Change

EPA ICR No. 1630.06; Amendment of the Oil Pollution Act Facility Response Plan; in 40 CFR part 112; OMB No. 2050–0135; on 08/15/2000 OMB changed the expiration date from 08/31/2003 to 12/31/2000.

Dated: October 19, 2000.

Oscar Morales,

Director, Collection Strategies Division.

[FR Doc. 00–28012 Filed 10–31–00; 8:45 am]

BILLING CODE 6560–50–P

ENVIRONMENTAL PROTECTION AGENCY

[FRL–6893–9]

Agency Information Collection Activities: Submission for OMB Review; Comment Request; Renewal and Revision of Information Collection Request for the Implementation of the Oil Pollution Act Facility Response Plan Requirements (40 CFR 112.20)

AGENCY: Environmental Protection Agency (EPA).

ACTION: Notice.

SUMMARY: In compliance with the Paperwork Reduction Act (44 U.S.C. 3501 *et seq.*), this notice announces that the following Information Collection Request (ICR) has been forwarded to the Office of Management and Budget (OMB) for review and approval: Renewal and Revision of Information Collection Request for the Implementation of the Oil Pollution Act Facility Response Plan Requirements (40 CFR 112.20), OMB Control Number 2050–0135, EPA ICR No.1630.07. The ICR describes the nature of the information collection and its expected burden and cost; where appropriate, it includes the actual data collection instrument.

DATES: Comments must be submitted on or before December 1, 2000.

ADDRESSES: Send comments, referencing EPA ICR No. 1630.07 and OMB Control Number 2050–0135, to the following addresses: Sandy Farmer, U.S. Environmental Protection Agency, Collection Strategies Division (Mail Code 2822), 1200 Pennsylvania Avenue, NW, Washington, DC 20460; and to Office of Information and Regulatory Office of Management and Budget (OMB), Attention: Desk Officer for EPA, 725 17th Street, NW, Washington, DC 20503.

FOR FURTHER INFORMATION CONTACT: For a copy of the ICR contact Sandy Farmer at EPA by phone at (202) 260–2740, by E-mail at farmer.sandy@epamail.epa.gov, or download off the Internet at http://www.epa.gov/icr and refer to EPA ICR No. 1630.07. For technical questions about the ICR contact Barbara Davis on 703–603–8823.

SUPPLEMENTARY INFORMATION:

Title: Renewal and Revision of Information Collection Request for the Implementation of the Oil Pollution Act Facility Response Plan Requirements (40 CFR 112.20) (OMB Control Number 2050–0135; EPA ICR #1630.07). This is a request for extension and revision of a currently approved collection.

Abstract: The authority for EPA's facility response plan requirements is derived from section 311 of the Clean Water Act, as amended by the Oil Pollution Act of 1990. EPA's regulation is codified at 40 CFR 112.20. Facility response plans enhance EPA's ability to protect navigable waters and sensitive environments from oil discharges, help ensure that human health and safety are protected in the vicinity of the facility, and reduce the cost of spills to the regulated community and society. EPA has recently finalized revisions to the rule to differentiate between animal fats and vegetable oils and other oils (65 FR 40776–40817, June 30, 2000). ICR

number 1630.06 is associated with this rulemaking.

All facility response plan (FRP) reporting and recordkeeping activities are mandatory. Each FRP is submitted to EPA. The Agency, in turn, reviews and approves plans from facilities identified as having the potential to cause ''significant and substantial harm'' to the environment for oil discharges. Other low risk, regulated facilities that are not required to prepare facility response plans are required to document their determination that they do not meet the ''substantial harm'' criteria.

None of the information to be gathered for this collection is believed to be confidential. An agency may not conduct or sponsor, and a person is not required to respond to, a collection of information unless it displays a currently valid OMB control number. The OMB control numbers for EPA's regulations are listed in 40 CFR part 9 and 48 CFR Chapter 15. The **Federal Register** document required under 5 CFR 1320.8(d), soliciting comments on this collection of information was published on May 31, 2000 (65 FR 34690–34698). No comments were received.

Burden Statement: The annual public reporting and recordkeeping burden for this collection of information is estimated as follows: An average of 0.1 hours of recordkeeping for newly regulated facilities not required to prepare FRPs (*i.e.,* facilities that certify that they do not meet the ''substantial harm'' criteria); 8.3 hours for recordkeeping and 239 hours for reporting for the newly regulated facilities required to prepare FRPs (*i.e.,* first year costs for plan development); 1.2 hours for recordkeeping and 98 hours for reporting for facilities maintaining FRPs (*i.e.,* subsequent costs for annual plan maintenance). Burden means the total time, effort, or financial resources expended by persons to generate, maintain, retain, or disclose or provide information to or for a Federal agency. This includes the time needed to review instructions; develop, acquire, install, and utilize technology and systems for the purposes of collecting, validating, and verifying information, processing and maintaining information, and disclosing and providing information; adjust the existing ways to comply with any previously applicable instructions and requirements; train personnel to be able to respond to a collection of information; search data sources; complete and review the collection of information; and transmit or otherwise disclose the information.

Respondents/Affected Entities: Owners and operators of oil discharges into waterways.

Estimated Number of Respondents: 10,310.

Frequency of Response: One-time certification, one time plan development. Annual plan review and revision as needed.

Estimated Total Annual Hour Burden: 583,130 hours.

Estimated Total Annualized Capital, O&M Cost Burden: $22,000.

Send comments on the Agency's need for this information, the accuracy of the provided burden estimates, and any suggested methods for minimizing respondent burden, including through the use of automated collection techniques to the addresses listed above. Please refer to EPA ICR No. 1630.07 and OMB Control No. 2050–0135 in any correspondence.

Dated: October 23, 2000.

Oscar Morales,

Director, Collection Strategies Division.

[FR Doc. 00–28013 Filed 10–31–00; 8:45 am]

BILLING CODE 6560–50–P

ENVIRONMENTAL PROTECTION AGENCY

[FRL–6893–8]

Agency Information Collection Activities; Toxic Chemical Release Reporting; Submission of EPA ICR No. 1704.05 to OMB

AGENCY: Environmental Protection Agency (EPA).

ACTION: Notice of submission to OMB.

SUMMARY: In compliance with the Paperwork Reduction Act (44 U.S.C. 3501 *et seq.*), this document announces that EPA is planning to submit the following continuing Information Collection Request (ICR) entitled: ''Alternate Threshold for Low Annual Reportable Amounts; Toxic Chemical Release Reporting,'' (EPA ICR No. 1704.05; OMB Control No. 2070–0143) to the Office of Management and Budget (OMB) pursuant to the procedures described in 5 CFR 1320.12. The ICR, which is abstracted below, describes the nature of the information collection and its estimated cost and burden. The Agency is requesting that OMB renew for 3 years the existing approval for this ICR, which is scheduled to expire on February 28, 2001. A **Federal Register** notice announcing the Agency's intent to seek the renewal of this ICR and the 60-day public comment opportunity, requesting comments on the request and the contents of the ICR, was issued on July 6, 2000 (65 FR 41653). EPA received comments on this ICR which have been addressed.

DATES: Additional comments may be submitted on or before December 1, 2000.

FOR FURTHER INFORMATION CONTACT: Sandy Farmer at EPA by phone on (202) 260–2740, by e-mail: ''farmer.sandy@epa.gov,'' or download off the Internet at http://www.epa.gov/icr/icr.htm and refer to EPA ICR No. 1704.05.

ADDRESSES: Send comments, referencing EPA ICR No. 1704.05 and OMB Control No. 2070–0143, to the following addresses: Ms. Sandy Farmer, Office of Environmental Information (2822), U.S. Environmental Protection Agency, 1200 Pennsylvania Ave., NW, Washington, DC 20460; and to Office of Information and Regulatory Affairs, Office of Management and Budget (OMB), Attention: Desk Officer for EPA, 725 17th Street, NW, Washington, DC 20503.

SUPPLEMENTARY INFORMATION:

Review Requested: This is a request to renew a currently approved information collection.

Title: Alternate Threshold for Low Annual Reportable Amounts; Toxic Chemical Release Reporting.

Abstract: EPCRA section 313 requires certain facilities manufacturing, processing, or otherwise using certain toxic chemicals in excess of specified threshold quantities to report their environmental releases of such chemicals annually. Each such facility must file a separate report for each such chemical.

In accordance with the authority in EPCRA, EPA has established an alternate threshold for those facilities with low amounts of a listed toxic chemical in wastes. A facility that meets the current reporting thresholds but estimates that the total amount of the chemical in total waste does not exceed 500 pounds per year, and that the chemical was manufactured, processed, or otherwise used in an amount not exceeding 1 million pounds during the reporting year, can take advantage of reporting under the alternate threshold option for that chemical for that reporting year.

Each qualifying facility that chooses to apply the revised threshold must file the Form A (EPA Form 9350–2) in lieu of a complete TRI reporting Form R (EPA Form 9350–1). In submitting the Form A, the facility certifies that the sum of the amount of the EPCRA section 313 chemical in wastes did not exceed 500 pounds for the reporting year, and that the chemical was manufactured, processed, or otherwise used in an

amount not exceeding 1 million pounds during the reporting year. Use of the Form A in place of the Form R represents a substantial savings to respondents, both in burden hours and in labor costs.

The primary function served by the submission of the Form A is to satisfy the statutory requirement to maintain reporting on a substantial majority of releases for all listed chemicals. Without the Form A, users of TRI data would not have access to any information on these chemicals. The Form A also serves as a *de facto* range report, which is useful to any party interested in amounts being handled at a particular facility or for broader statistical purposes. Additionally, the Form A provides compliance monitoring and enforcement programs and other interested parties with a means to track chemical management activities and verify overall compliance with the rule. Responses to this collection of information are mandatory (see 40 CFR part 372) and facilities subject to reporting must either submit a Form A or a Form R.

Burden Statement: The annual public burden for this collection of information, which is approved under OMB Control No. 2070–0143, is estimated to average 34.6 hours per each form, for a facility which certifies one chemical per form A. For facilities which choose to certify two chemicals per form A, the estimated burden is 67.8 hours per form. Responding to this information collection requires: (1) Determining whether a listed toxic chemical is eligible for certification under the alternate threshold, and (2) completing the Form A. The burden of determining eligibility for certification is estimated to average 33.2 hours for each chemical that is certified. The burden of completing the Form A is estimated to average 1.4 hours, regardless of the number of chemicals being certified. The total burden per response is the combination of these two, and will vary depending on the number of listed toxic chemicals being certified.

EPA estimates that as many as 7,397 respondents may submit a Form A with these responses containing a total of 14,793 certifications. Total respondent burden and cost for completing those Form As are estimated at approximately 582,000 burden hours and $52 million per year. (The alternate threshold may save reporting facilities up to 189,000 hours, with a dollar value of $11 million, compared to the cost of reporting on Form R.) The estimated burden in this supporting statement differs from what is currently in OMB's inventory for alternate threshold reporting (13,157 respondents, 9,072 responses, and 646,875 burden hours) as a result of both an adjustment and a program change. The adjustment was made by calculating the number of eligible respondents and responses from the manufacturing sector based on TRI data from the 1998 reporting year (the most recent TRI data available). This adjustment reduced reporting burden by 62,772 hours. The program change was made by excluding the reporting of PBT chemicals on Form A. This change reduces the burden associated with this collection. The portion of the change due to this regulatory change decreases burden by 2,114 hrs.

Estimated No. of Respondents: 7,397 respondents.

Estimated Total Annual Burden on Respondents: 582,000 burden hours.

Frequency of Collection: Annual.

Dated: October 23, 2000.

Oscar Morales,

Director, Collection Strategies Division.

[FR Doc. 00–28014 Filed 10–31–00; 8:45 am]

BILLING CODE 6560–50–P

ENVIRONMENTAL PROTECTION AGENCY

[FRL–6893–7]

Agency Information Collection Activities: Submission for OMB Review; Comment Request; New Source Performance Standard (NSPS Subpart SSS) for Magnetic Tape Coating Facilities

AGENCY: Environmental Protection Agency (EPA).

ACTION: Notice.

SUMMARY: In compliance with the Paperwork Reduction Act (44 U.S.C. 3501 *et seq.*), this document announces that the following Information Collection Request (ICR) has been forwarded to the Office of Management and Budget (OMB) for review and approval: NSPS, Subpart SSS, for Magnetic Tape Coating Facilities, OMB Control Number: 2060–0171, expiration date: 11/30/2000. The ICR describes the nature of the information collection and its expected burden and cost; where appropriate, it includes the actual data collection instrument.

DATES: Comments must be submitted on or before December 1, 2000.

ADDRESSES: Send comments, referencing EPA ICR No. 1135.07 and OMB Control No. 2060–0171, to the following addresses: Sandy Farmer, U.S. Environmental Protection Agency, Collection Strategies Division (Mail Code 2822), 1200 Pennsylvania Avenue, NW, Washington, DC 20460; and to Office of Information and Regulatory Affairs, Office of Management and Budget (OMB), Attention: Desk Officer for EPA, 725 17th Street, NW, Washington, DC 20503

FOR FURTHER INFORMATION CONTACT: For a copy of the ICR contact Sandy Farmer at EPA by phone at (202) 260–2740, by E-Mail at Farmer.Sandy@epamail.epa.gov or download off the Internet at *http://www.epa.gov/icr* and refer to EPA ICR No.1135.07. For technical questions about the ICR contact Anthony Raia in the Office of Compliance at 202–564–6045.

SUPPLEMENTARY INFORMATION:

Title: Standards of Performance for Magnetic Tape Coating Facilities (OMB Control No.2060–0171; EPA ICR No 1135.07). Expiration date: 11/30/00. This is a request for extension of a currently approved collection.

Abstract: The New Source Performance Standards (NSPS) for Magnetic Tape Coating Facilities were proposed on January 22, 1986, and promulgated on October 3, 1988. These standards apply to each coating operation and each piece of coating mix preparation equipment for which construction, modification or reconstruction commenced after January 22, 1986. Volatile organic compounds (VOC) are the pollutants regulated under the standards.

Owners or operators of the affected facilities described must make the following one time-only reports: notification of the date of construction or reconstruction; notification of the anticipated and actual dates of startup; notification of any physical or operational change to an existing facility which may increase the regulated pollutant emission rate; notification of the date of the initial performance test (not required under section 60.393(a)); and the results of the initial performance test.

Owners or operators also are required to maintain records of the occurrence and duration of any startup, shutdown, or malfunction in the operation of an affected facility. These notifications, reports and records are required, in general, of all sources subject to NSPS.

Monitoring requirements specific to these magnetic tape operations consist mainly of VOC measurements, including monthly records of VOC content of all coatings applied, total amount and percent VOC recovered, and the total amount of coating applied. In addition, facilities utilizing less solvent annually than the applicable

cutoff shall make semiannual estimates of projected annual amount of solvent use and maintain records of actual solvent use.

Each owner or operator of an affected magnetic tape coating operation shall install, calibrate, maintain, and operate a monitoring device that continuously indicates and records the concentration level of organic compounds in the outlet gas stream. Certain facilities will also be required to continuously measure and record either the combustion temperature of the incinerator (for those facilities controlled by a thermal incinerator) or the condenser exhaust temperature (for those facilities controlled by a condensation system).

Owners or operators of the affected facilities described must make the following one-time-only reports: notification of the date of construction or reconstruction; notification of the anticipated and actual dates of startup; notification of any physical or operational change to an existing facility which may increase the regulated pollutant emission rate; notification of demonstration of the continuous monitoring system (CMS); notification of the date of the initial performance test; and the results of the initial performance test.

An agency may not conduct or sponsor, and a person is not required to respond to, a collection of information unless it displays a currently valid OMB control number. The OMB control numbers for EPA's regulations are listed in 40 CFR part 9 and 48 CFR Chapter 15. The **Federal Register** document required under 5 CFR 1320.8(d), soliciting comments on this collection of information was published on March 31, 2000 (65 FR 17259). No comments were received.

Burden Statement: The annual public reporting and recordkeeping burden for this collection of information is estimated to average 69 hours per response. Burden means the total time, effort, or financial resources expended by persons to generate, maintain, retain, or disclose or provide information to or for a Federal agency. This includes the time needed to review instructions; develop, acquire, install, and utilize technology and systems for the purposes of collecting, validating, and verifying information, processing and maintaining information, and disclosing and providing information; adjust the existing ways to comply with any previously applicable instructions and requirements; train personnel to be able to respond to a collection of information; search data sources; complete and review the collection of information; and transmit or otherwise disclose the information.

Respondents/Affected Entities: Magnetic Tape Manufacturing.

Estimated Number of Respondents: 13.

Frequency of Response: On occasion, quarterly, semi-annually.

Estimated Total Annual Hour Burden: 3891 hours.

Estimated Total Annualized Capital and O&M Cost Burden: $93,000.

Send comments on the Agency's need for this information, the accuracy of the provided burden estimates, and any suggested methods for minimizing respondent burden, including through the use of automated collection techniques to the following addresses. Please refer to EPA ICR No. 1135.07 and OMB Control No. 2060–0171 in any correspondence.

Dated: October 19, 2000.

Oscar Morales,

Director, Collection Strategies Division.

[FR Doc. 00–28015 Filed 10–31–00; 8:45 am]

BILLING CODE 6560–50–P

ENVIRONMENTAL PROTECTION AGENCY

[FRL–6894–7]

Request for Applications for Essential Use Exemptions to the Production and Import Phaseout of Ozone Depleting Substances Under the Montreal Protocol for the Years 2002 and 2003

AGENCY: Environmental Protection Agency (EPA).

ACTION: Notice.

SUMMARY: Through this notice, the Environmental Protection Agency (EPA) is requesting applications for consideration at the Thirteenth Meeting of the Parties to the *Montreal Protocol on Substances that Deplete the Ozone Layer* (the Protocol) to be held in 2001, for exemptions to the production and import phaseout in 2002 and 2003 for ozone-depleting substances (including halons 1211 and 1301, CFC–11, CFC–12, CFC–113, CFC–114, CFC–115, CFC–13, CFC–111, CFC–112, CFC–211, CFC–212, CFC–213, CFC–214, CFC–215, CFC–216, CFC–217, carbon tetrachloride, and methyl chloroform).

DATES: Applications for essential use exemptions must be submitted to EPA no later than December 1, 2000 in order for the United States (U.S.) government to complete its review and to submit nominations to the United Nations Environment Programme (UNEP) and the Protocol Parties in a timely manner.

ADDRESSES: Send two copies of application materials to: Erin Birgfeld, Stratospheric Protection Division (6205J), Environmental Protection Agency, 1200 Pennsylvania Avenue, NW, Washington, DC 20460. If submitting applications by courier, the office address is 501 3rd Street, NW, Washington, DC 20001. Send one copy of your application materials to: Air Docket A–93–39, 401 M Street, SW, (6102), Room M1500, Washington, DC 20460.

Confidentiality: Applications should not contain confidential or proprietary information. Such confidential information should be submitted under separate cover and be clearly identified as ''trade secret,'' ''proprietary,'' or ''company confidential.'' Information covered by a claim of business confidentiality will be disclosed by EPA only to the extent, and by means of the procedures, set forth at 40 CFR Part 2, Subpart B (41 FR 36902). If no claim of confidentiality accompanies the information when it is received by EPA, the information may be made available to the public by EPA without further notice to the company (40 CFR 2.203).

FOR FURTHER INFORMATION CONTACT: Erin Birgfeld at the above address or at (202) 564–9079 telephone, (202) 565–2095 fax, or *birgfeld.erin@epa.gov.* General information may be obtained from the Stratospheric Ozone Hotline at 1–800–296–1996.

SUPPLEMENTARY INFORMATION:

Table of Contents

I. Background—The Essential Use Nomination Process
II. Information Required for Essential Use Applications for Production or Importation of Class I Substances in 2002 and 2003

I. Background—The Essential Use Nomination Process

As described in previous **Federal Register** (FR) notices (58 FR 29410, May 20, 1993; 59 FR 52544, October 18, 1994; 60 FR 54349, October 23, 1995; 61 FR 51110, 0 30, 1996, 62 FR 51655, October 2, 1997; 63 FR 42629, August 10, 1998; and 64 FR 50083 , September 15, 1999), the Parties to the Protocol agreed during the Fourth Meeting in Copenhagen on November 23–25, 1992, to accelerate the phase-out schedules for Class I ozone-depleting substances. Specifically, the Parties agreed that non-Article 5 Parties (developed countries) would phase out the production and consumption of halons by January 1, 1994, and the production and consumption of other Class I substances (under 40 CFR 82, Subpart A), except methyl bromide, by January 1, 1996.

The Parties also reached decisions and adopted resolutions on a variety of other matters, including the criteria to be used for allowing ''essential use'' exemptions from the phaseout of production and importation of controlled substances. Decision IV/25 of the Fourth Meeting of the Parties details the specific criteria and review process for granting essential use exemptions.

Decision IV/25 states that ''* * * a use of a controlled substance should qualify as ''essential'' only if: (i) It is necessary for the health, safety or is critical for the functioning of society (encompassing cultural and intellectual aspects); and (ii) there are no available technically and economically feasible alternatives or substitutes that are acceptable from the standpoint of environment and health''. In addition, the Parties agreed ''that production and consumption, if any, of a controlled substance, for essential uses should be permitted only if: (i) All economically feasible steps have been taken to minimize the essential use and any associated emission of the controlled substance; and (ii) the controlled substance is not available in sufficient quantity and quality from the existing stocks of banked or recycled controlled substances. * * *''

Applicants should be aware that essential use exemptions granted to the U.S. for the year 2001 under the Protocol were limited to chlorofluorocarbons (CFCs) for metered dose inhalers (MDIs) to treat asthma and chronic obstructive pulmonary disease, and methyl chloroform for use in manufacturing solid rocket motors.

The first step in obtaining essential use allowances is for the user to consider whether the use of the controlled substance meets the Decision IV/25 criteria. The user should then notify EPA of the candidate use and provide information for U.S. government agencies and the Protocol Parties to evaluate that use according to the criteria under Decision IV/25. Upon receipt of the essential use exemption application, EPA reviews the information provided and works with other interested Federal agencies to determine whether it meets the essential use criteria and warrants being nominated by the United States for an exemption. In the case of multiple exemption requests for a single use such as for MDIs, EPA aggregates exemption requests received from individual entities into a single U.S. request. An important part of the EPA review of requests for CFCs for MDIs is to determine that the aggregate request for a particular future year adequately reflects the total market need for CFC MDIs and expected availability of CFC substitutes by that point in time. If the sum of individual requests does not account for such factors, the U.S. government may adjust the aggregate request to better reflect true market needs.

Nominations submitted to the Ozone Secretariat by the U.S. and other Parties are forwarded to the UNEP Technical and Economic Assessment Panel (TEAP) and its Technical Options Committees (TOCs), which review the submissions and make recommendations to the Parties for essential use exemptions. Those recommendations are then considered by the Parties at their annual meeting for final decision. If the Parties declare a specified use of a controlled substance as essential and issue the necessary exemption from the production and consumption phaseout, EPA may propose regulatory changes to reflect the decisions by the Parties, but only to the extent such action is consistent with the Clean Air Act (CAA or Act).

The timing of this process is such that in any given year the Parties review nominations for essential use exemptions from the production and consumption phaseout intended for the following year and subsequent years. This means that, if nominated, applications submitted in response to today's notice for an exemption in 2002 and 2003 will be considered by the Parties in 2001 for final action.

The quantities of controlled ODSs that are requested in response to this notice, if approved by the Parties to the Montreal Protocol in 2001, will then be allocated as essential-use allowances (EUAs) to the specific U.S. companies through notice and comment rulemaking. EUAs for the year 2002 will be allocated to U.S. companies at the end of 2001, and EUAs for the year 2003 will be made at the end of 2002.

Each year the Parties to the Protocol have approved an unlimited, global essential use exemption for the production and consumption of high purity class I ODSs for laboratory and analytical uses. Prior to the year 2000, EPA implemented this exemption domestically through regulation. As discussed in last year's notice requesting applications for essential use allowances (64 FR 50083), in the year 2000 and beyond, the Clean Air Act does not specifically list an exemption for laboratory and analytical uses of class I ODSs. EPA is issuing a separate rulemaking later in the year which will clarify this issue further. Until then, current stocks of class I ODSs that are already in the U.S. can continue to be sold for laboratory and analytical uses.

II. Information Required for Essential Use Applications for Production or Importation of Class I Substances in 2002 and 2003

Through this notice, EPA requests applications for essential use exemptions for all Class I substances, except methyl bromide, for 2002 and 2003. This is the last opportunity to submit applications for 2002. Companies will have an opportunity to submit supplemental or amended applications for 2003 next year. All requests for exemptions submitted to EPA must present information as prescribed in the TEAP ''Handbook on Essential Use Nominations'' (Handbook) as last published in 1997. You can request a Handbook from the Stratospheric Protection Hotline at (301) 614–3990 or (800) 296–1996. It is also available electronically on the web at *www.teap.org.* In brief, the TEAP Handbook states that applicants must present information on:

- Role of use in society
- Alternatives to use, including education programs on alternatives
- Steps to minimize use, including development of CFC-free alternatives
- Steps to minimize emissions
- Amount of substance available through recycling and stockpiling
- Quantity of controlled substances requested by year.

In order to gain more complete information from essential use applicants for CFC MDIs, EPA is requesting more detailed information in the EUA applications. First, we ask that in the case of EUA applications requesting CFCs for multiple pharmaceutical companies (*e.g.* International Pharmaceutical Aerosol Consortium), the application make clear the amount of CFCs requested for each member company. Second, all essential use application for CFCs for MDIs should provide a breakdown of the quantity of CFCs necessary for each drug to be produced using the EUA. This detailed breakdown of EUAs will allow EPA and FDA to make more informed decisions on the amount of CFC to be nominated by the U.S. government for the years 2002 and 2003.

Third, we request that all New Drug Application holders (NDA holders or sponsors) be engaged in the essential use application process for the year 2003 and beyond. We know of sponsor companies whose CFC MDI is produced by another company (the contract filler). In the past, EPA has accepted essential use applications submitted by the contract filler, in the absence sufficient information on the NDA holder's reformulation efforts. Therefore, EPA is

requesting that for the year 2003 and beyond, all NDA holders for MDIs to be produced using EUAs, submit an application to EPA for EUAs as specified in this notice. Please note, EPA will also consider applications submitted jointly by contract fillers. In the case where a contract filler produces a portion of an NDA holder's CFC MDIs, the contract filler and the NDA holder should work together to determine the total amount of CFCs necessary to produce the NDA holder's entire product line of CFC MDIs. The NDA holder should also provide an estimate of how the CFCs would be split between the contract filler and the NDA holder in the allocation year. This estimate will be used only as a basis for determining the nomination amount, and may be adjusted prior to allocation of EUAs.

Since the U.S. government can not forward incomplete or inadequate nominations to the Ozone Secretariat, it is important for applicants to provide all information requested in the Handbook, including the information specified in the supplemental research and development form (page 43). The accounting framework matrix in the Handbook titled ''Table IV: Reporting Accounting Framework for Essential Uses Other Than Laboratory and Analytical'' requests data for the year 2000 on the amount of ODS exempted for an essential use, the amount acquired by production, the amount acquired by import, the amount on hand at the start of the year, the amount available for use in 2000, the amount used for the essential use, the quantity contained in exported products, the amount destroyed, and the amount on hand at the end of the year. Because the data necessary to complete Table IV will not be available until after January 1, 2001, companies should not include this chart with their EUA applications in response to this notice. EPA plans to send letters to each essential use applicant requesting the information in Table IV in the first 2 weeks of January 2001. Companies will have only fourteen days in which to respond since EPA must compile companies' responses to complete the U.S. CFC Accounting Framework for submission to the Parties to the Montreal Protocol by the end of January.

EPA anticipates that the 2001 review by the Parties of MDI essential use requests will focus extensively on research efforts underway to develop alternatives to CFC MDIs, on education programs to inform patients and health care providers of the CFC phaseout and the transition to alternatives, and on steps taken to minimize CFC use and emissions including efforts to recapture or reprocess the controlled substance. Accordingly, applicants are strongly advised to present detailed information on these points, including the scope and cost of such efforts and the medical and patient organizations involved in the work. Applicants can strengthen their exemption requests by submitting a complete set of education materials, including copies of printed, electronic or audio-visual tools. Applicants are given notice that exemption requests without adequate information on research and education will not be considered complete.

Applicants should submit their exemption requests to EPA as noted in the **ADDRESSES** section at the beginning of today's notice.

Dated: October 25, 2000.

Robert Perciasepe,

Assistant Administrator, Office of Air and Radiation.

[FR Doc. 00–28009 Filed 10–31–00; 8:45 am]

BILLING CODE 6560–50–P

ENVIRONMENTAL PROTECTION AGENCY

[FRL–6894–8]

Board of Scientific Counselors, Executive Committee Meeting

AGENCY: Environmental Protection Agency (EPA).

ACTION: Notice of teleconference.

SUMMARY: Pursuant to the Federal Advisory Committee Act, Public Law 92–463, as amended (5 U.S.C., App. 2) notification is hereby given that the Environmental Protection Agency, Office of Research and Development (ORD), The Board of Scientific Counselors (BOSC), will hold its Executive Committee Meeting.

DATES: The Teleconference will be held on November 16, 2000.

ADDRESSES: On Thursday, November 16, 2000, the teleconference will begin at 10 a.m. and will adjourn at 12 Noon. The call in number is 202–260–7280, access code: 1774#. All times noted are Eastern Time.

SUPPLEMENTARY INFORMATION: The Agenda of the BOSC Executive Committee will cover:

- Discussion and approval of the BOSC report on the Management of PM Research in ORD,
- Committee Assignments,
- Multi-year Planning.

The teleconference is open to the public. Any member of the public wishing to make a presentation at the meeting should contact Shirley Hamilton, Designated Federal Officer, Office of Research and Development (8701R), 1200 Pennsylvania Avenue, NW., Washington, DC 20460; telephone at (202) 564–6853. In general each individual making an oral presentation will be limited to a total of three minutes.

FOR FURTHER INFORMATION CONTACT: Shirley R. Hamilton, Designated Federal Officer, U.S. Environmental Protection Agency, Office of Research and Development, NCER (MC 8701R), 1200 Pennsylvania Avenue, NW., Washington, DC 20460, (202) 564–6853.

Dated: October 27, 2000.

Peter W. Preuss,

Director, National Center for Environmental Research.

[FR Doc. 00–28008 Filed 10–31–00; 8:45 am]

BILLING CODE 6560–50–M

ENVIRONMENTAL PROTECTION AGENCY

[OPP–00439F; FRL–6752–9]

Pesticide Program Dialogue Committee (PPDC): Inert Disclosure Stakeholder Workgroup; Open Meeting

AGENCY: Environmental Protection Agency (EPA).

ACTION: Notice of meeting.

SUMMARY: This notice announces a conference call meeting of the Inert Disclosure Stakeholder Workgroup. The workgroup was established to advise the Pesticide Program Dialogue Committee on ways of making information on inert ingredients more available to the public while working within the mandates of the Federal Insecticide, Fungicide, and Rodenticide Act (FIFRA) and related Confidential Business Information concerns.

DATES: The meeting will be held by conference call on Wednesday, November 8, 2000 from 3:00 pm to 6:00 pm EST.

ADDRESSES: Members of the public may listen to the meeting discussions on site at: Crystal Mall #2 (CM #2), 1921 Jefferson Davis Highway, Arlington, VA; conference Room 1123. Seating is limited and will be available on a first come first serve basis.

FOR FURTHER INFORMATION CONTACT: By mail: Cameo Smoot, Office of Pesticide Programs (7506C), U.S. Environmental Protection Agency, 1200 Pennsylvania Avenue, NW., Washington, DC 20460, telephone: (703) 305–5454. Office locations: 11th floor, CM #2, 1921 Jefferson Davis Highway, Arlington, VA. E-mail smoot.cameo@epa.gov.

SUPPLEMENTARY INFORMATION: The Inert Disclosure Stakeholder Workgroup is composed of a participants from the following sectors: environmental/public interest and consumer groups; industry and pesticide users; Federal, State and local governments; the general public; academia and public health organizations.

The Inert Disclosure Stakeholder Workgroup, will advise the EPA through the Pesticide Program Dialogue Committee (PPDC), on potential measures to increase the availability to the public of information about inert ingredients (also called ''other ingredients'') under the Federal Insecticide, Fungicide, and Rodenticide Act (FIFRA). Among the factors the workgroup has been asked to consider in preparing its recommendations are: existing law regarding inert ingredients and Confidential Business Information (CBI); current Agency processes and policies for disseminating inert ingredient information to the public, including procedures for the protection of CBI; informational needs for a variety of stakeholders; and business reasons for limiting the disclosure of inert ingredient information.

The Inert Disclosure Stakeholder Workgroup meeting is open to the public. Written public statements are welcome and should be submitted to the OPP administrative docket OPP–00439A. Any person who wishes to file a written statement can do so before or after the conference call. These statements will become part of the permanent file and will be provided to the Workgroup members for their information.

How and to Whom Do I Submit the Comments?

You may submit comments through the mail, in person, or electronically. To ensure proper receipt by EPA, it is imperative that you identify docket control number OPP–00439A in the subject line on the first page of your response.

1. *By mail*. Submit your comments to: Public Information and Records Integrity Branch (PIRIB), Information Resources and Services Division (7502C), Office of Pesticide Programs (OPP), Environmental Protection Agency, 1200 Pennsylvania Ave., NW., Washington, DC 20460.

2. *In person or by courier*. Deliver your comments to: Public Information and Records Integrity Branch (PIRIB), Information Resources and Services Division (7502C), Office of Pesticide Programs (OPP), Environmental Protection Agency, Rm. 119, CM #2, 1921 Jefferson Davis Hwy., Arlington, VA. The PIRIB is open from 8:30 a.m. to 4 p.m., Monday through Friday, excluding legal holidays. The PIRIB telephone number is (703) 305–5805.

3. *Electronically*. You may submit your comments and/or data electronically by e-mail to: ''*opp-docket@epa.gov,*'' or you can submit a computer disk as described above in paragraphs 1. and 2. of this section. Do not submit any information electronically that you consider to be CBI. Avoid the use of special characters and any form of encryption. Electronic submissions will be accepted in WordPerfect 6.1/8.0 or ASCII file format. All comments in electronic form must be identified by docket control number OPP–00439A. Electronic comments may also be filed online at many Federal Depository Libraries.

List of Subjects

Environmental protection, Pesticides, Inerts, PPDC.

Dated: October 25, 2000.

Susan B. Hazen,

Acting Director, Office of Pesticide Programs.

[FR Doc. 00–28077 Filed 10–31–00; 8:45 am]

BILLING CODE 6560–50–S

ENVIRONMENTAL PROTECTION AGENCY

[OPPTS–00299; FRL–6746–1]

Proposed National Action Plan For Level 1 Pesticide; Notice of Availability

AGENCY: Environmental Protection Agency (EPA).

ACTION: Notice.

SUMMARY: EPA has developed a draft National Action Plan to address the remaining risks to the Level 1 priority Persistent, Bioaccumulative, and Toxic (PBT) pesticide pollutants. This proposed National Action Plan covers the chemical compounds: Aldrin, Dieldrin, Chlordane, DDT, Mirex and Toxaphene. These six pesticides are highly chlorinated, persistent organic pesticides that were once widely used in large quantities in the United States. Because of evidence supporting the adverse environmental and human health effects of these substance, including their probable carcinogenicity, the pesticide use of all of the Level 1 pesticides were canceled in the U.S. in the 1970's and 80's. Current data substantiate that these Level 1 pesticides are still ubiquitous in the environment, and at concentrations that may be of concern for both humans and wildlife. This plan, developed pursuant to the Agency 's Multimedia Strategy for Priority PBT Pollutants, addresses the remaining risks. This Notice announces the availability of the proposed Pesticide national Action for public review and comment.

DATES: Comments, identified by docket control number OPPTS –00299, must be received on or before December 1, 2000.

ADDRESSES: Comments may be submitted by mail, electronically, or in person. Please follow the detailed instructions for each method as provided in Unit I. of the **SUPPLEMENTARY INFORMATION**. To ensure proper receipt by EPA, it is imperative that you identify docket control number OPPTS –00299 in the subject line on the first page of your response.

FOR FURTHER INFORMATION CONTACT: For general information contact: Barbara Cunningham, Director, Office of Program Management and Evaluation, Office of Pollution Prevention and Toxics (7401), Environmental Protection Agency, 1200 Pennsylvania Ave., NW., Washington, DC 20460; telephone number: (202) 554–1404; e-mail address: TSCA–Hotline @epa.gov. For technical information contact: Paul Matthai, Pollution Prevention Division Mail Code 7409, Office of Pollution Prevention and Toxics, Environmental Protection Agency, 1200 Pennsylvania Ave., NW., Washington, DC 20460; telephone number: 202 260–3385; e-mail address:matthai.paul@epa.gov.

SUPPLEMENTARY INFORMATION:

I. General Information

A. Does This Action Apply to Me?

This action is directed to the public in general. This action may, however, be of interest to persons who have unused stocks of these canceled pesticide, such as farmers, or who live or work near contaminated reservoirs such as sediments, soil and localized contaminated industrial and pesticide dealership sites. Since other entities may also be interested, the Agency has not attempted to describe all the specific entities that may be affected by this action. If you have any questions regarding the applicability of this action to a particular entity, consult the technical person listed in the **FOR FURTHER INFORMATION CONTACT**.

B. How Can I Get Additional Information, Including Copies of This Document or Other Related Documents?

1. *Electronically*. You may obtain electronic copies of this document, and certain other related documents that might be available electronically, from the EPA Internet Home Page at http://www.epa.gov/pbt. To access this

document, on the PBT Home Page select ''What's new. '' You can also go directly to the **Federal Register** listings at http://www.epa.gov/fedrgstr/.

2. *In person*. The Agency has established an official record for this action under docket control number OPPTS –00299. The official record consists of the documents specifically referenced in this action, any public comments received during an applicable comment period, and other information related to this action, including any information claimed as confidential business information (CBI). This official record includes the documents that are physically located in the docket, as well as the documents that are referenced in those documents. The public version of the official record does not include any information claimed as CBI. The public version of the official record, which includes printed, paper versions of any electronic comments submitted during an applicable comment period, is available for inspection in the TSCA Nonconfidential Information Center, North East Mall Rm. B-607, Waterside Mall, 401 M St., SW., Washington, DC. The Center is open from noon to 4 p.m., Monday through Friday, excluding legal holidays. The telephone number for the Center is (202) 260–7099.

C. How and to Whom Do I Submit Comments?

You may submit comments through the mail, in person, or electronically. To ensure proper receipt by EPA, it is imperative that you identify docket control number OPPTS –00299 in the subject line on the first page of your response.

1. *By mail*. Submit your comments to: Document Control Office (7407), Office of Pollution Prevention and Toxics (OPPT), Environmental Protection Agency, 401 M St., SW., Washington, DC 20460.

2. *In person or by courier*. Deliver your comments to: OPPT Document Control Office (DCO) in East Tower Rm. G–099, Waterside Mall, 401 M St., SW., Washington, DC. The DCO is open from 8 a.m. to 4 p.m., Monday through Friday, excluding legal holidays. The telephone number for the DCO is (202) 260–7093.

3. *Electronically*. You may submit your comments electronically by e-mail to: oppt.ncic@epa.gov, or mail your computer disk to the addresess identified in this unit. Do not submit any information electronically that you consider to be CBI. Electronic comments must be submitted as an ASCII file avoiding the use of special characters and any form of encryption. Comments and data will also be accepted on standard disks in WordPerfect 6.1/8.0 or ASCII file format. All comments in electronic form must be identified by docket control number OPPTS–00299. Electronic comments may also be filed online at many Federal Depository Libraries.

D. How Should I Handle CBI Information That I Want to Submit To the Agency?

Do not submit any information electronically that you consider to be CBI. You may claim information that you submit to EPA in response to this document as CBI by marking any part or all of that information as CBI. Information so marked will not be disclosed except in accordance with procedures set forth in 40 CFR part 2. In addition to one complete version of the comment that includes any information claimed as CBI, a copy of the comment that does not contain the information claimed as CBI must be submitted for inclusion in the public version of the official record. Information not marked confidential will be included in the public version of the official record without prior notice. If you have any questions about CBI or the procedures for claiming CBI, please consult the technical person identified under **FOR FURTHER INFORMATION CONTACT**.

E. What Should I Consider as I Prepare My Comments for EPA?

We invite you to provide your views on the various options we propose, new approaches we have not considered, the potential impacts of the various options (including possible unintended consequences), and any data or information that you would like the Agency to consider during the development of the final action. You may find the following suggestions helpful for preparing your comments:

1. Explain your views as clearly as possible.
2. Describe any assumptions that you used.
3. Provide copies of any technical information and/or data you used that support your views.
4. If you estimate potential burden or costs, explain how you arrived at the estimate that you provide.
5. Provide specific examples to illustrate your concerns.
6. Offer alternative ways to improve the rule or collection activity.
7. Make sure to submit your comments by the deadline in this notice.
8. To ensure proper receipt by EPA, be sure to identify the docket control number assigned to this action in the subject line on the first page of your response. You may also provide the name, date, and Federal Register citation.

II. What Action Is the Agency Taking?

On November 16, 1998, EPA released its draft Agency-wide Multimedia Strategy for Priority Persistent, Bioaccumulative, and Toxic (PBT) Polutants (PBT Strategy). The goal of the PBT Strategy is to identify and reduce risks to human health and the environment from current and future exposures to priority PBT pollutants. This document serves as the Draft National Action Plan for the Level 1 pesticides; six of the 12 Level 1 priority PBT pollutants identified for the initial focus of action in the PBT Strategy.

Aldrin, dieldrin, chlordane, DDT, mirex, and toxaphene were once widely used in large quantities in the United States for applications, including: insect control on agricultural crops and cotton, treatment of livestock, control of ants, termite control in houses, and control of insect carriers of human diseases such as malaria. Because of evidence supporting the adverse environmental and human health effects of these substances, including their probable carcinogenicity, the pesticide uses of all of the Level 1 pesticides were canceled in the U.S. in the 1970's and 80's. In general, the remaining sources of Level 1 pesticides in the United States include: unused stocks of these canceled pesticides; contaminated reservoirs such as sediments, soil, and localized contaminated industrial and dealership sites; atmospheric transport and deposition (from both regional and international sources); and DDT present as an impurity (<0.1%) in Dicofol, a pesticide currently used in the U.S. and Canada.

Human exposure occurs mainly through the food chain and for the most exposed populations, is probably due to the consumption of contaminated fish. Potential risk and health consequences due to the Level 1 pesticides are of particular concern for certain human populations who have increased exposure (e.g., subsistence fishers) and/or increased susceptibility (e.g., the developing embryo/fetus, nursing infants, and children).

Data gathered in current multimedia monitoring efforts provided substantial evidence that the Level 1 pesticides are still ubiquitous in the environment, and at concentrations that may be of concern for both humans and wildlife. There are also significant quantities of unused, obsolete pesticide stocks stored throughout the U.S. and overseas which have the potential to cause serious

environmental contamination and human health risks if accidentally released or not disposed of properly. This plan attempts to address these remaining risks by: (1) Supporting programs to collect and properly dispose of unwanted pesticides; (2) remediating nonpoint and reservoir sources like sediments, contaminated industrial sites, agricultural chemical dealer/storage sites, and past use sites on a priority basis; (3) reducing human exposure through public education, fish consumption advisories, and other outreach activities; (4) working with foreign governments to reduce or phase –out production and use of these substances, thereby reducing the risks from long –range transport; and (5) continued monitoring for environmental levels in fish, wildlife, and humans.

EPA considers stakeholder involvement essential to reaching the goals of the PBT Strategy. EPA is seeking stakeholder input and invites comment on this draft National Action Plan on the following topics and issues related to the PBT Level 1 pesticides:

1. Quantities of domestic unused stocks of pesticide products.
2. Historical trends or current soil residues (urban and agricultural).
3. Information on sites with significant Level 1 pesticide contamination.
4. Current indoor levels of pesticides used in residents.
5. Alternative disposal and soil/sediment remediation methods, and performance information.
6. Other sensitive or highly exposed human subpopulations.
7. Meaningful and feasible ways to address the problem of canceled pesticides in the environment.
8. Meaningful PBT goals, performance measures, and time frames for such accomplishments.

List of Subjects

Environmental protection.

Dated: October 20, 2000.

Susan H. Wayland,

Acting Assistant Administrator, Office of Prevention, Pesticides and Toxic Substances.

[FR Doc. 00–27928 Filed 10–31–00 8:45 am]

BILLING CODE 6560–50–S

FEDERAL ELECTION COMMISSION

Sunshine Act Meeting

AGENCY: Federal Election Commission.

Date & Time: Tuesday, November 7, 2000 at 10 a.m.

Place: 999 E Street, NW., Washington, DC.

Status: This meeting will be closed to the public.

Items to be Discussed: Compliance matters pursuant to 2 U.S.C. 437g. Audits conducted pursuant to 2 U.S.C. 437g, 438(b), and Title 26, U.S.C. Matters concerning participation in civil actions or proceedings or arbitration. Internal personnel rules and procedures or matters affecting a particular employee.

Date & Time: Thursday, November 9, 2000 at 10 a.m.

Place: 999 E Street, NW., Washington, DC. (Ninth Floor).

Status: This meeting will be open to the public.

Items to be Discussed: Correction and Approval of Minutes.

General Public Political Communications Coordinated with Candidates and Independent Expenditures: Draft Final Rules with Explanation and Justification.

Administrative Matters.

Person to Contact for Information: Mr. Ron Harris, Press Officer, Telephone: (202) 694–1220.

Mary W. Dove,

Acting Secretary of the Commission.

[FR Doc. 00–28161 Filed 10–30–00; 2:08 pm]

BILLING CODE 6715–01–M

FEDERAL MARITIME COMMISSION

Notice of Agreement(s) Filed

The Commission hereby gives notice of the filing of the following agreement(s) under the Shipping Act of 1984. Interested parties can review or obtain copies of agreements at the Washington, DC offices of the Commission, 800 North Capitol Street, N.W., Room 940. Interested parties may submit comments on an agreement to the Secretary, Federal Maritime Commission, Washington, DC 20573, within 10 days of the date this notice appears in the **Federal Register**.

Agreement No.: 011375–054.

Title: Trans-Atlantic Conference Agreement.

Parties: Atlantic Container Line, A.P. Moller-Maersk Sealand, Hapag-Lloyd Container Line GmbH, Mediterranean Shipping Company S.A., Nippon Yusen Kaisha, Orient Overseas Container Line Limited, P&O Nedlloyd Limited.

Synopsis: The proposed agreement amendment authorizes the parties to agree on the temporary withdrawal of one or more vessels commencing with sailings in the United States or Europe from mid-December to mid-February, and authorizes those parties withdrawing vessels to charter space from parties not withdrawing vessels in the trade.

Dated: October 27, 2000.

By Order of the Federal Maritime Commission.

Bryant L. VanBrakle,

Secretary.

[FR Doc. 00–28046 Filed 10–31–00; 8:45 am]

BILLING CODE 6730–01–P

FEDERAL MARITIME COMMISSION

Notice of Termination of Certificates Issued to Premier Operations Ltd. (D/B/A Premier Cruises and Premier Cruise Lines)

Notice is given of the termination of all certificates issued by the Federal Maritime Commission to Premier Operations Ltd. (d/b/a Premier Cruises and Premier Cruise Lines) (''Premier'') pursuant to sections 2 and 3 of Public Law 89–777, 46 U.S.C. app. Sections 817d and e. Premier has ceased operations, and bankruptcy proceedings have been initiated in the Supreme Court of Bermuda to liquidate Premier. In addition, the Commission has been notified of the termination of coverage provided to Premier under various financial instruments. That coverage, in the form of a surety bond for performance and guaranties for casualty, provided the necessary evidence of financial responsibility for issuing Commission certificates to Premier. Accordingly, all casualty and performance certificates as specified below have, or soon will, become null and void.

Premier currently holds Certificates (Casualty) and Certificates (Performance) for vessels as identified below.

Vessel	Casualty certificate No.	Performance certificate No.
THE BIG RED BOAT II (ex EDINBURGH CASTLE)	C–1603	P–670
THE BIG RED BOAT III (ex ISLANDBREEZE)	C–1597	P–691
OCEANBREEZE	C–1533	N/A
OCEANIC (THE BIG RED BOAT)	C–1550	P–673
REMBRANDT	C–1551	P–674
SEABREEZE I	C–1552	P–675

Guarantors who provided evidence of financial responsibility supporting the above listed casualty certificates notified the Commission on September 14, 2000, and September 18, 2000, that the guaranties would be terminated on October 14, 2000, and October 18, 2000,

respectively. Accordingly, pursuant to 46 CFR 540.26(a), the above identified casualty certificates have become null and void.

All of the performance certificates are supported by a surety bond issued by Greenwich Insurance Company and NAC Reinsurance Corporation in the amount of $15 million. On September 26, 2000, the surety notified the Commission of the cancellation of the surety bond effective October 26, 2000. Since Premier has ceased operations and is in the process of being liquidated, the above identified performance certificates shall become null and void effective October 26, 2000, pursuant to 46 CFR 540.8(a).

This notice is issued under the authority of 46 CFR 501.27(h)(5).

Sandra L. Kusumoto,

Director, Bureau of Consumer Complaints and Licensing.

[FR Doc. 00–28045 Filed 10–31–00; 8:45 am]

BILLING CODE 6730–01–P

FEDERAL MARITIME COMMISSION

Ocean Transportation Intermediary License; Revocations

The Federal Maritime Commission hereby gives notice that the following ocean transportation intermediary licenses have been terminated pursuant to section 19 of the Shipping Act of 1984 (46 U.S.C. app. 1718) and the regulations of the Commission pertaining to the licensing of Ocean Transportation Intermediaries, effective on the corresponding dates shown below:

License Number: 4014F.
Name: Air Cargo Centralam, Inc.
Address: 6750 NW 79th Avenue, Miami, FL 33166.
Date Revoked: October 13, 2000.
Reason: Failed to maintain a valid bond.

License Number: 12237N.
Name: Costa Rica Carriers, Inc.
Address: 3405–A NW 72nd Avenue, Suite #201, Miami, FL 33122.
Date Revoked: October 6, 2000.
Reason: Failed to maintain a valid bond.

License Number: 14753N.
Name: Freightbank Line, Inc.
Address: 19401 S. Vermont Avenue, Suite A204, Torrance, CA 90502.
Date Revoked: October 6, 2000.
Reason: Failed to maintain a valid bond.

License Number: 1748N.
Name: Mutual Export Corporation.
Address: 5 Becker Farm Road, Roseland, NJ 07068.
Date Revoked: September 9, 2000.
Reason: Failed to maintain a valid bond.

License Number: 8446N.
Name: Robo Co. dba Robo Express Co.
Address: 24309 Narbonne Avenue, Suite 200, Lomita, CA 90717.
Date Revoked: August 13, 2000.
Reason: Failed to maintain a valid bond.

License Number: 1483NF.
Name: Tokyo Express Co., Inc.
Address: 70 Charter Oak Avenue, San Francisco, CA 94124.
Date Revoked: July 13, 2000.
Reason: Failed to maintain a valid bond.

Sandra L. Kusumoto,

Director, Bureau of Consumer Complaints and Licensing.

[FR Doc. 00–28047 Filed 10–31–00; 8:45 am]

BILLING CODE 6730–01–P

FEDERAL MARITIME COMMISSION

Ocean Transportation Intermediary License; Applicant

Notice is hereby given that the following applicants have filed with the Federal Maritime Commission an application for licenses as Non-Vessel Operating Common Carrier and Ocean Freight Forwarder—Ocean Transportation Intermediary pursuant to section 19 of the Shipping Act of 1984 as amended (46 U.S.C. app. 1718 and 46 CFR 515).

Persons knowing of any reason why the following applicants should not receive a license are requested to contact the Office of Transportation Intermediaries, Federal Maritime Commission, Washington, D.C. 20573.

Non-Vessel Operating Common Carrier Ocean Transportation Intermediary Applicants

Logistics USA, Inc., 153–43 77th Road, Flushing, NY 11367, Officers: Siu Ming Chu, President, (Qualifying Individual), Shirley Sze Lea Tan-Chu, Vice President

Ever-Leading International Inc., 1320 N. San Gabriel Blvd., Rosemead, CA 91770, Officer: Hans Hsu, Vice President, (Qualifying Individual)

Keystone International Logistics, Inc., One Cross Island Plaza, Suite 229A, Rosedale, NY 11422, Officer: Kerry Loui, President, (Qualifying Individual)

Platinum International Logistics, Inc., 1481 Hamilton Pathway, Itasca, IL 60143, Officer: George Chu, Jr., President, (Qualifying Individual)

Non-Vessel Operating Common Carrier and Ocean Freight Forwarder Transportation Intermediary Applicants

Transitainer Inc., 1065 W. Thorndale Ave., Suite 106, Bensenville, IL 60106, Officers: Richard W. Shike, Vice President, (Qualifying Individual), Geoff Prudence, President

MTI Worldwide Logistics, 16000 Christensen Road, Suite 303, Seattle, WA 98168, Officers: Jeffrey Horst, Vice President, (Qualifying Individual), Karl O. Krug, President

JTL Freight Service Co., 1815 Rose Avenue, San Marine, CA 91108, Suan Hwa Lin (Carol Lin), Sole Proprietor

Kominis International, LLC d/b/a Capitol, Shipping and Logistics, 2447 Shenandoah Street, Vienna, VA 22180, Officers: Ntinos G. Karaiskos, General Manager, (Qualifying Individual), Stergiani N. Karaiskos, Secretary

Intertrans Express, Inc., 1322 N. San Gabriel Blvd., Rosemead, CA 91770, Officers: Charles Yu, Director, (Qualifying Individual), Chun Tsung Tao, President

Ocean Freight Forwarders—Ocean Transportation Intermediary Applicants

COR Logistics, Inc., 1420 Washington Blvd., Suite 203, Detroit, MI 48226, Officers: Francoise Cham, Vice President (Qualifying Individual), Walter Corley, President

International Transport Solutions, Inc., 145–69 226th Street, Jamaica, NY 11413, Officers: Eric P. Burrell, Superviser/Spec. Projects, (Qualifying Individual), William Gensburg, Joint Managing Dir.

Omni-Freight Int'l Inc., 1318 N. San Gabriel Blvd., Rosemead, CA 91770, Officers: Power Hsu, President, (Qualifying Individual), Wen-Yu Ting, Secretary

P. O. Box International, 7303 N.W. 56th Street, Miami, FL 33166, Officer: Oscar F. Gonzalez, President, (Qualifying Individual)

J. Powers International 2301 So. State, Suite 100–B, Little Rock, AR 72206, Officer: Christopher D. Joshua, Sr., President

Dated: October 27, 2000.

Bryant L. VanBrakle,

Secretary.

[FR Doc. 00–28048 Filed 10–31–00; 8:45 am]

BILLING CODE 6730–01–P

DEPARTMENT OF HEALTH AND HUMAN SERVICES

Agency for Healthcare Research and Quality

Public Meeting on Medicare Coverage of Clinical Trials

AGENCY: Agency for Healthcare Research and Quality (AHRQ), formerly AHCPR, DHHS.

ACTION: Notice of public meeting.

SUMMARY: On October 20, 2000, AHRQ held a public meeting to hear comments from the public on specific qualifying criteria for identifying clinical trials appropriate for Medicare coverage. To provide additional time for organizations and institutions interested in presenting and/or submitting their comments, AHRQ is holding a second public meeting on November 20, from 9 a.m. to 1 p.m.

In the past, Medicare has not paid for health care services provided as part of clinical trials because of their experimental nature. To carry out an executive memorandum from the President of the United States to the Secretary of Health and Human Services, received on June 7, 2000 directing Medicare to promptly provide for payment of routine patient care costs incurred by Medicare beneficiaries in connection with participation in clinical trials, the Health Care Financing Administration (HCFA) has issued a National Coverage Decision. The text of the NCD is available on the HCFA website: (*http://www.hcfa.gov/quality/8d2.htm*). In order to implement this new coverage policy for routine costs in clinical trials, HCFA must define the clinical trials for which payment of routine costs would be appropriate. Therefore, HCFA requested AHRQ to convene a multi-agency Federal Panel (the ''Panel'') to develop readily verifiable criteria by which to identify trials that meet an appropriate standard of quality. The qualifying criteria will be developed under the authority to support health care research in § 1142 of the Social Security Act (Act).

This notice announces a public meeting for the purpose of receiving oral and written comments on easily verifiable qualifying criteria for identifying clinical trials appropriate for Medicare coverage. The criteria should be objective (dichotomous yes/no answers) and should not require a detailed and technical expert assessment of each trial.

DATES: The second public meeting will take place on November 20, from 9 a.m. to 1 p.m.

ADDRESSES: The meeting will be held at the Agency for Healthcare Research and Quality Conference Center, 6010 Executive Blvd., 4th Floor, Rockville, MD 20852.

FOR FURTHER INFORMATION CONTACT: Nilam Patel, M.P.H., Center for Practice and Technology Assessment, AHRQ, 6010 Executive Blvd., Suite 300, Rockville, MD 20852; phone: (301) 594–0236; Fax: (301) 594–4027; E-mail: *npatel@ahrq.gov.*

Arrangements for the Public Meeting: All representatives of organizations and other individuals who wish to attend, provide relevant written comments and information to AHRQ, and/or make a brief (10 minutes or less) oral statement at the meeting, must register with Nilam Patel, AHRQ, at the above address no later than three days prior to the date of the meeting. A copy of written materials should also be submitted to Ms. Patel. On the day of the meeting, presenters are requested to bring 25 copies of their written materials for distribution.

If sign language interpretation or other reasonable accommodations for a disability is needed, please contact Linda Reeves, Assistant Administrator for Equal Opportunity, AHRQ, at (301) 594–6662 no later than three days before the meeting date.

SUPPLEMENTARY INFORMATION:

1. Background

In June, 2000, the President of the United States issued an executive memorandum directing the Secretary of Health and Human Resources to ''explicitly authorize Medicare payment for routine patient care costs * * * and costs due to medical complications associated with participation in clinical trials.'' In keeping with the President's directive, HCFA has developed and added a new section in the Medicare Coverage Issues Manual that will implement national coverage of routine costs of qualified clinical trials. For the purposes of this national coverage decision, routine costs of clinical trials include all items and services that are otherwise generally available to Medicare beneficiaries (conventional care); for example, hospital services, physician services, and diagnostic tests that are not statutorily excluded from coverage. Certain costs, such as the investigational item or service, itself, items and services provided solely to satisfy data collection and analysis needs and that are not used in the direct clinical management of the patient (*e.g.,* monthly CT scans for a condition usually requiring only a single scan), and items and services customarily provided by the research sponsors free of charge for any enrollee in the trial will not be covered.

In order to implement the coverage policy, a system must be in place to help identify trials that meet an appropriate standard of quality and for which it is appropriate for Medicare to pay the associated routine costs. HCFA requested AHRQ to form a multi-agency Federal Panel to develop qualifying criteria that would indicate a high probability that a trial has the following desirable characteristics of a scientifically sound clinical trial:

(1) The principal purpose of the trial is to test whether the intervention potentially improves the participants' health outcomes;

(2) The trial is well-supported by available scientific and medical information or it is intended to clarify to establish the health outcomes of interventions already in common clinical use;

(3) The trial does not unjustifiably duplicate existing studies;

(4) The trial design is appropriate to answer the research question being asked in the trial;

(5) The trial is sponsored by a credible organization or conducted by an individual capable of executing the proposed trial successfully;

(6) The trial is in compliance with Federal regulations relating to the protection of human subjects; and

(7) The trial is conducted according to appropriate standards of scientific integrity.

Certain trials are presumed by AHRQ, and the other members of the Panel that it has convened, to be of sound quality and to have these desirable characteristics. Guided by the assumptions of the Panel and discussions with AHRQ, HCFA announced both long term and short term types of automatic qualification for Medicare coverage of the routine costs of clinical trials in its related NCD.

''Effective September 19, 2000, clinical trials that are deemed to be automatically qualified are:

1. Trials funded by NIH, CDC, AHRQ, HCFA, DOD, and VA;

2. Trials supported by centers or cooperative groups that are funded by the NIH, CDC, AHRQ, HCFA, DOD and VA;

3. Trials conducted under an investigational new drug application (IND) reviewed by the FDA; and

4. Drug trials that are exempt from having an IND under 21 CFR 312.2(b)(1) will be deemed automatically qualified until the qualifying criteria are developed and the certification process is in place. At that time the principal investigators of these trials must certify

that the trials meet the qualifying criteria in order to maintain Medicare coverage of routine costs. This certification process will only affect the future status of a trial and will not be used to retroactively change the earlier deemed status.''

The Panel will be developing criteria for identifying other trials that are likely to have the seven desirable characteristics of clinical trials. (From HCFA's Final National Coverage Decision posted on HCFA's website (http://www.hcfa.gov/quality/8d2.htm).

2. Purpose

AHRQ is holding this second meeting to ensure that all interested parties have adequate time to provide comments and pertinent information that would contribute to defining specific and unambiguous qualifying criteria for identifying clinical trials appropriate for Medicare coverage. We are soliciting comments about what specific qualifying criteria might be used to select trials that are likely to have the desirable characteristics of scientifically sound clinical trials identified by HCFA. The criteria should be easily verifiable, should not require a detailed and expert trial by trial review, and, where possible, be dichotomous (that is, objective yes/no responses). Some examples might be:

Is the trial approved by an investigational review board (IRB)?
Does the trial have a written protocol?
Has the trial been approved by a Federal agency?
Has the trial received and external, non-Federal funding?
Has the trial been reviewed by any external, non-Federal group?
Does a data safety and monitoring board provide independent oversight of the trial?

AGRQ is also interested in receiving information on the availability of relevant literature (citations or copies if possible) that might assist the Panel in its formation of the qualifying criteria.

Agenda

The meeting will begin at 9 a.m. and continue through 1 p.m. If more requests to make oral statements are received than can be accommodated at this meeting, the chair person will allocate speaking time in a manner that attempts, to the extent possible, to have a range of information, findings, and views presented orally. Those who cannot be granted speaking time because of time constraints are assured that their written comments will be considered along with other evidence during the course of further discussions and report preparation.

Dated: October 26, 2000.

John M. Eisenberg,

Director.

[FR Doc. 00–28036 Filed 10–31–00; 8:45 am]

BILLING CODE 4160–90–M

DEPARTMENT OF HEALTH AND HUMAN SERVICES

Centers for Disease Control and Prevention (CDC)

The Advisory Committee to the Director, National Center for Environmental Health (NCEH), Centers for Disease Control and Prevention (CDC); Meeting.

In accordance with section 10(a)(2) of the Federal Advisory Committee Act (Pub.L. 92–463), the Centers for Disease Control and Prevention (CDC) announces the following committee meeting:

Name: Advisory Committee to the Director, NCEH.

Times and Dates: 9 am–5 pm (EST), November 20, 2000; 9 am–12 pm (EST), November 21, 2000.

Place: Swissotel, 3391 Peachtree Road, NE, Atlanta, GA 30326.

Status: Open to the public for observation and comment, limited only by the space available. The meeting room accommodates approximately 45 people.

Purpose: The Secretary, and by delegation, the Director, Centers for Disease Control and Prevention, are authorized under Section 301(42 U.S.C. 241) and Section 311(42 U.S.C. 243) of the Public Health Service Act, as amended, to (1) conduct, encourage, cooperate with, and assist other appropriate public authorities, scientific institutions, and scientists in the conduct of research, investigations, experiments, demonstrations, and studies relating to the causes, diagnosis, treatment, control, and prevention of physical and mental diseases, and other impairments; (2) assist States and their political subdivisions in the prevention of infectious diseases and other preventable conditions, and in the promotion of health and well being; and (3) train State and local personnel in health work. The purpose of this meeting is to provide advice on: (1) Environmental public health problems that potentially pose the greatest risks to human health and may not be receiving adequate attention; (2) the primary prevention of birth defects and developmental and other disabilities; (3) the prevention of secondary conditions in persons with a primary disability; and (4) the research agenda needed to improve the science base relative to human health effects and environmental exposures, and that will ultimately provide sound human health data for policy and decision-making.

Matters to be Discussed: Agenda items will include implications of the Child Health Bill, the National Exposure Report, the Genetics Assessment Testing Program, and on a shared vision of environmental health between NCEH and the Agency for Toxic Substances and Disease Registry (ATSDR) at CDC.

Agenda items are tentative and subject to change as priorities dictate.

Contact Person for more Information: Michael J. Sage, Designated Federal Official, CDC, 4770 Buford Highway, NE, MS F–29, Atlanta, Georgia 30341–3724; telephone 770–488–7020, fax 770–488–7024; e-mail: *mjs6@cdc.gov.*

The Director, Management Analysis and Services Office, has been delegated the authority to sign **Federal Register** notices pertaining to announcements of meetings and other committee management activities for both the Centers for Disease Control and Prevention and the Agency for Toxic Substances and Disease Registry.

Dated: October 27, 2000.

Carolyn J. Russell,

Director, Management Analysis and Services Office, Centers for Disease Control and Prevention.

[FR Doc. 00–27986 Filed 10–31–00; 8:45 am]

BILLING CODE 4163–18–P

DEPARTMENT OF HEALTH AND HUMAN SERVICES

Administration for Children and Families

[Program Announcement No. ACF/ACYF–PA–HS–2001–02B]

Fiscal Year 2001 Discretionary Announcement for Select Service Areas of Early Head Start; Availability of Funds and Request for Applications

AGENCY: Administration on Children, Youth and Families, ACF, DHHS.

ACTION: Correction.

SUMMARY: This document contains a correction to the Notice that was published in the **Federal Register** on Wednesday, September 13, 2000.

On page 55256, in the State of Alaska, in the Funding for the following counties column, delete ''$797,487'' and replace with ''$914,488''.

On page 55256, in the State of Arizona, in the County of Maricopa, in the Funding for the following counties column, delete ''$895,843'' and replace with ''$956,190''.

On page 55256, in the State of California, add ''Alameda'' to the County column, and next to that add ''$1,254,931'' in the Funding for the following counties column, and in the Current service area column add ''San Leandro, San Lorenzo, Castro Valley, Hayward, Union City, Fremont, Newark, Livermore, Pleasanton, and Dublin''.

On page 55256, in the State of California, in the County of El Dorado, in the Funding for the following counties column, delete ''884,818'' and replace with ''$947,640''.

On page 55256, in the State of California, in the County of Fresno, in the Funding to the following counties column, delete ''752,322'' and replace with ''798,213''.

On page 55256, in the State of California, in the County of Nevada, in the Funding to the following counties column, delete ''$1,077,655'' and replace with ''$1,146,292''.

On page 55256, in the State of California, in the County of San Mateo, in the Funding to the following counties column, delete ''$641,039'' and replace with ''$1,072,738'' and in the Current service area column, delete ''Half Moon Bay'' with replace with ''Entire County''.

On page 55256, in the State of Colorado, in the County of Denver, next to the Funding amount of $1,380,779, in the Current service area column, after Montbello delete ''and City Park'' and replace with ''City Park, Globeville, Skyland and North Capitol Hill''.

On page 55257, in the State of Hawaii, in the County of Oahu, in the Funding for the following counties column, delete ''$635,745'' and replace with ''$678,925'' and in the County of Oahu, in the Funding for the following counties column, delete ''$453,443'' and replace with ''$481,104''.

On page 55257, in the State of Idaho, add ''Nez Perce'' to the County Column, and add ''Nez Perce Reservation'' in the Current service area column.

On page 55259, in the State of New York, in the County of Saratoga, in the Funding for the following counties column, delete ''$998,746'' and replace with ''$927,124''.

On page 55259, in the State of North Dakota, delete ''Carson'' from the County column, delete ''$797,487'' from the Funding for the following counties column, and delete ''Boundaries of Standing Rock Reservation'' from the Current service area column.

On page 55259, in the State of North Dakota, in the County of Sioux, add ''$797,487'' to the Funding for the following counties column and delete ''Boundaries of Standing Rock Reservation'' from the Current service area column and replace with ''Standing Rock Sioux Reservation''.

On page 55259, in the State of South Dakota, in the County of Pennington, in the Funding for the following counties column, delete ''$795,140'' and replace with ''$1,155,140''.

On page 55259, in the State of South Dakota, in the County column, after Meade, add the following County: ''Lawrence'' and in the Current service area column add ''Entire County''.

On page 55259, in the State of South Dakota, in the County column after Lawrence, add the following County: ''Fall River'' and in the Current service area column add ''Entire County''.

On page 55259, in the State of South Dakota, in the County Column after ''Fall River'', add the following County: ''Custer'' and in the Current service area column add ''Entire County''.

On page 55259, in the State of South Dakota, in the County Column after ''Custer'', add the following County: ''Jackson'' and in the Current service area column add ''Entire County''.

On page 55259, in the State of South Dakota, in the County Column after ''Jackson'', add the following County: ''Haakon'' and in the Current service area column add ''Entire County''.

On page 55259, in the State of South Dakota, add ''Corson'' to the County column, and in the Current service area column add ''Standing Rock Sioux Reservation'' and add the following note in the Current service area column: ''Note: for funding level see North Dakota, Sioux County''.

On page 55260, in the State of Virginia, in the County of Buchanan, in the Funding for the following counties column, delete ''$425,640'' and replace with ''$657,534''.

FOR FURTHER INFORMATION CONTACT: The ACYF Operations Center at 1–800–351–2293 or send an email to *chs@lcgnet.com.* You can also contact Judith Jerald, Early Head Start, Head Start Bureau at (202) 205–8074.

Dated: October 24, 2000.

Patricia Montoya,

Commission, Administration on Children, Youth and Families.

[FR Doc. 00–27970 Filed 10–31–00; 8:45 am]

BILLING CODE 4184–01–M

DEPARTMENT OF HEALTH AND HUMAN SERVICES

Food and Drug Administration

Request for Nominations for Members on Public Advisory Committees; Pharmacy Compounding Advisory Committee

AGENCY: Food and Drug Administration, HHS.

ACTION: Notice.

SUMMARY: The Food and Drug Administration (FDA) is requesting nominations for four members to serve on the Pharmacy Compounding Advisory Committee in the Center for Drug Evaluation and Research.

FDA has special interest in ensuring that women, minority groups, and the physically challenged are adequately represented on advisory committees and, therefore, extends particular encouragement to nominations for appropriately qualified female, minority, or physically challenged candidates. Final selection from among each vacancy will be determined by the expertise required to meet specific agency needs and in a manner to ensure appropriate balance of membership.

DATES: Nominations should be received on or before December 1, 2000.

ADDRESSES: All nominations for membership should be sent to Jayne E. Peterson (address below).

FOR FURTHER INFORMATION CONTACT: *Regarding all nominations for membership*: Jayne E. Peterson, Center for Drug Evaluation and Research (HFD–21), Food and Drug Administration, 5600 Fishers Lane, Rockville, MD 20857, 301–827–7001.

SUPPLEMENTARY INFORMATION: On November 21, 1997, the President signed the Food and Drug Administration Modernization Act of 1997 (Public Law 105–115) (the Modernization Act). Section 127 of the Modernization Act added section 503A to the Federal Food, Drug, and Cosmetic Act (the act) (21 U.S.C. 353a)). Section 503A of the act directs FDA to issue regulations relating to the application of Federal law to the practice of pharmacy compounding. To assist the agency in preparing these regulations, Congress directed FDA to convene and consult an advisory committee that will include representatives of the National Association of Boards of Pharmacy (NABP), the United States Pharmacopeia (USP), pharmacy, physician and consumer organizations, as well as other experts selected by the agency. The Pharmacy Compounding Advisory Committee was formed on March 10, 1998, and 15 members were appointed to the committee. The terms of four members have expired or the positions have otherwise become vacant. Accordingly, FDA is requesting nominations for four members to serve on the Pharmacy Compounding Advisory Committee.

Function

The function of the committee is to provide advice on scientific, technical, and medical issues concerning drug compounding by licensed practitioners and to make appropriate recommendations to the Commissioner of Food and Drugs.

Criteria for Members

Persons nominated for membership should have expertise in one or more of the following fields: Pharmaceutical

compounding, the practices of pharmacies specializing in compounding, the practices of general retail pharmacies, the practices of hospital pharmacies, fields of medicine in which compounding drugs or the use of compounded drugs is relatively common, pharmaceutical manufacturing, clinical toxicology, clinical pharmacology, chemistry, and related specialties. The current committee includes one representative of the NABP, one representative of the USP, one representative of a consumer organization, and one representative of the pharmaceutical manufacturing industry whose terms have not yet expired. The term of office is up to 4 years.

Nomination Procedures

Interested persons may nominate one or more qualified persons for membership on the advisory committee. Nominations shall state that the nominee is willing to serve as a member of the advisory committee and appears to have no conflict of interest that would preclude committee membership. Potential candidates will be asked by FDA to provide detailed information concerning such matters as financial holdings, consultancies, and research grants or contracts to permit evaluation of possible sources of conflict of interest.

This notice is issued under the Federal Advisory Committee Act (5 U.S.C. app. 2), section 503A of the Federal Food, Drug, and Cosmetic Act (21 U.S.C. 353a), section 904 of the Federal Food, Drug, and Cosmetic Act (21 U.S.C. 394) as amended by the Food and Drug Administration Revitalization Act (Public Law 101–635), and 21 CFR part 14, relating to advisory committees.

Dated: October 25, 2000.

Linda A. Suydam,

Senior Associate Commissioner.

[FR Doc. 00–27966 Filed 10–31–00; 8:45 am]

BILLING CODE 4160–01–F

DEPARTMENT OF HEALTH AND HUMAN SERVICES

Substance Abuse and Mental Health Services Administration

Current List of Laboratories Which Meet Minimum Standards To Engage in Urine Drug Testing for Federal Agencies

AGENCY: Substance Abuse and Mental Health Services Administration, HHS.

ACTION: Notice.

SUMMARY: The Department of Health and Human Services notifies Federal agencies of the laboratories currently certified to meet standards of Subpart C of Mandatory Guidelines for Federal Workplace Drug Testing Programs (59 FR 29916, 29925). A similar notice listing all currently certified laboratories will be published during the first week of each month, and updated to include laboratories which subsequently apply for and complete the certification process. If any listed laboratory's certification is totally suspended or revoked, the laboratory will be omitted from updated lists until such time as it is restored to full certification under the Guidelines.

If any laboratory has withdrawn from the National Laboratory Certification Program during the past month, it will be listed at the end, and will be omitted from the monthly listing thereafter.

This Notice is also available on the internet at the following website: *http://www.health.org/workplace.*

FOR FURTHER INFORMATION CONTACT: Mrs. Giselle Hersh or Dr. Walter Vogl, Division of Workplace Programs, 5600 Fishers Lane, Rockwall 2 Building, Room 815, Rockville, Maryland 20857; Tel.: (301) 443–6014, Fax: (301) 443–3031.

Special Note: Please use the above address for all surface mail and correspondence. For all overnight mail service use the following address: Division of Workplace Programs, 5515 Security Lane, Room 815, Rockville, Maryland 20852.

SUPPLEMENTARY INFORMATION: Mandatory Guidelines for Federal Workplace Drug Testing were developed in accordance with Executive Order 12564 and section 503 of Pub. L. 100–71. Subpart C of the Guidelines, ''Certification of Laboratories Engaged in Urine Drug Testing for Federal Agencies,'' sets strict standards which laboratories must meet in order to conduct urine drug testing for Federal agencies. To become certified an applicant laboratory must undergo three rounds of performance testing plus an on-site inspection. To maintain that certification a laboratory must participate in a quarterly performance testing program plus periodic, on-site inspections.

Laboratories which claim to be in the applicant stage of certification are not to be considered as meeting the minimum requirements expressed in the HHS Guidelines. A laboratory must have its letter of certification from SAMHSA, HHS (formerly: HHS/NIDA) which attests that it has met minimum standards.

In accordance with Subpart C of the Guidelines, the following laboratories meet the minimum standards set forth in the Guidelines:

ACL Laboratories, 8901 W. Lincoln Ave., West Allis, WI 53227, 414–328–7840/800–877–7016, (Formerly: Bayshore Clinical Laboratory).

Advanced Toxicology Network, 3560 Air Center Cove, Suite 101, Memphis, TN 38118, 901–794–5770/888–290–1150.

Aegis Analytical Laboratories, Inc., 345 Hill Ave., Nashville, TN 37210, 615–255–2400.

Alabama Reference Laboratories, Inc., 543 South Hull St., Montgomery, AL 36103, 800–541–4931/334–263–5745.

Alliance Laboratory Services, 3200 Burnet Ave., Cincinnati, OH 45229, 513–585–9000, (*Formerly:* Jewish Hospital of Cincinnati, Inc.).

American Medical Laboratories, Inc., 14225 Newbrook Dr., Chantilly, VA 20151, 703–802–6900.

Associated Pathologists Laboratories, Inc., 4230 South Burnham Ave., Suite 250, Las Vegas, NV 89119–5412, 702–733–7866/800–433–2750.

Baptist Medical Center—Toxicology Laboratory, 9601 I–630, Exit 7, Little Rock, AR 72205–7299, 501–202–2783 (Formerly: Forensic Toxicology Laboratory Baptist Medical Center)

Clinical Laboratory Partners, LLC, 129 East Cedar St., Newington, CT 06111, 860–696–8115 (Formerly: Hartford Hospital Toxicology Laboratory)

Clinical Reference Lab, 8433 Quivira Rd., Lenexa, KS 66215–2802, 800–445–6917

Cox Health Systems, Department of Toxicology, 1423 North Jefferson Ave., Springfield, MO 65802, 800–876–3652/417–269–3093 (Formerly: Cox Medical Centers)

Dept. of the Navy, Navy Drug Screening Laboratory, Great Lakes, IL, Building 38–H, P.O. Box 88–6819, Great Lakes, IL 60088–6819, 847–688–2045/847–688–4171

Diagnostic Services Inc., dba DSI, 12700 Westlinks Drive, Fort Myers, FL 33913, 941–561–8200/800–735–5416

Doctors Laboratory, Inc., P.O. Box 2658, 2906 Julia Dr., Valdosta, GA 31602, 912–244–4468

DrugProof, Division of Dynacare/Laboratory of Pathology, LLC, 1229 Madison St., Suite 500, Nordstrom Medical Tower, Seattle, WA 98104, 206–386–2672/800–898–0180 (Formerly: Laboratory of Pathology of Seattle, Inc., DrugProof, Division of Laboratory of Pathology of Seattle, Inc.)

DrugScan, Inc., P.O. Box 2969, 1119 Mearns Rd., Warminster, PA 18974, 215–674–9310

Dynacare Kasper Medical Laboratories,* 14940–123 Ave., Edmonton, Alberta,

Canada T5V 1B4, 780–451–3702/800–661–9876
ElSohly Laboratories, Inc., 5 Industrial Park Dr., Oxford, MS 38655, 662–236–2609
Express Analytical Labs, 1301 18th Ave NW, Suite 110, Austin, MN 55912, 507–437–7322
Gamma-Dynacare Medical Laboratories,* A Division of the Gamma-Dynacare Laboratory Partnership, 245 Pall Mall St., London, ONT, Canada N6A 1P4, 519–679–1630
General Medical Laboratories, 36 South Brooks St., Madison, WI 53715, 608–267–6267
Integrated Regional Laboratories, 5361 NW 33rd Avenue, Fort Lauderdale, FL 33309, 954–777–0018, 800–522–0232 (Formerly: Cedars Medical Center, Department of Pathology)
Kroll Laboratory Specialists, Inc., 1111 Newton St., Gretna, LA 70053, 504–361–8989/800–433–3823 (Formerly: Laboratory Specialists, Inc.)
LabOne, Inc., 10101 Renner Blvd., Lenexa, KS 66219, 913–888–3927/800–728–4064 (Formerly: Center for Laboratory Services, a Division of LabOne, Inc.)
Laboratory Corporation of America Holdings, 7207 N. Gessner Road, Houston, TX 77040, 713–856–8288/800–800–2387
Laboratory Corporation of America Holdings, 1904 Alexander Drive, Research Triangle Park, NC 27709, 919–572–6900/800–833–3984 (Formerly: LabCorp Occupational Testing Services, Inc., CompuChem Laboratories, Inc.; CompuChem Laboratories, Inc., A Subsidiary of Roche Biomedical Laboratory; Roche CompuChem Laboratories, Inc., A Member of the Roche Group)
Laboratory Corporation of America Holdings, 4022 Willow Lake Blvd., Memphis, TN 38118, 901–795–1515/800–233–6339 (Formerly: LabCorp Occupational Testing Services, Inc., MedExpress/National Laboratory Center)
Laboratory Corporation of America Holdings, 69 First Ave., Raritan, NJ 08869, 908–526–2400/800–437–4986 (Formerly: Roche Biomedical Laboratories, Inc.)
Marshfield Laboratories, Forensic Toxicology Laboratory, 1000 North Oak Ave., Marshfield, WI 54449, 715–389–3734/800–331–3734
MAXXAM Analytics Inc.*, 5540 McAdam Rd., Mississauga, ON, Canada L4Z 1P1, 905–890–2555 (Formerly: NOVAMANN (Ontario) Inc.)
Medical College Hospitals Toxicology Laboratory, Department of Pathology, 3000 Arlington Ave., Toledo, OH 43699, 419–383–5213
MedTox Laboratories, Inc., 402 W. County Rd. D, St. Paul, MN 55112, 651–636–7466/800–832–3244
MetroLab-Legacy Laboratory Services, 1225 NE 2nd Ave., Portland, OR 97232, 503–413–5295/800–950–5295
Minneapolis Veterans Affairs Medical Center, Forensic Toxicology Laboratory, 1 Veterans Drive, Minneapolis, Minnesota 55417, 612–725–2088
National Toxicology Laboratories, Inc., 1100 California Ave., Bakersfield, CA 93304, 661–322–4250/800–350–3515
NWT Drug Testing, 1141 E. 3900 South, Salt Lake City, UT 84124, 801–293–2300/800–322–3361 (Formerly: NorthWest Toxicology, Inc.)
One Source Toxicology Laboratory, Inc., 1705 Center Street, Deer Park, TX 77536, 713–920–2559 (Formerly: University of Texas Medical Branch, Clinical Chemistry Division; UTMB Pathology-Toxicology Laboratory)
Oregon Medical Laboratories, P.O. Box 972, 722 East 11th Ave., Eugene, OR 97440–0972, 541–687–2134
Pacific Toxicology Laboratories, 6160 Variel Ave., Woodland Hills, CA 91367, 818–598–3110/800–328–6942 (Formerly: Centinela Hospital Airport Toxicology Laboratory)
Pathology Associates Medical Laboratories, 11604 E. Indiana Ave., Spokane, WA 99206, 509–926–2400/800–541–7891
PharmChem Laboratories, Inc., 1505–A O'Brien Dr., Menlo Park, CA 94025, 650–328–6200/800–446–5177
PharmChem Laboratories, Inc., Texas Division, 7606 Pebble Dr., Fort Worth, TX 76118, 817–215–8800 (Formerly: Harris Medical Laboratory)
Physicians Reference Laboratory, 7800 West 110th St., Overland Park, KS 66210, 913–339–0372/800–821–3627
Poisonlab, Inc., 7272 Clairemont Mesa Blvd., San Diego, CA 92111, 858–279–2600/800–882–7272
Quest Diagnostics Incorporated, 3175 Presidential Dr., Atlanta, GA 30340, 770–452–1590 (Formerly: SmithKline Beecham Clinical Laboratories, SmithKline Bio-Science Laboratories)
Quest Diagnostics Incorporated, 4444 Giddings Road, Auburn Hills, MI 48326, 248–373–9120/800–444–0106 (Formerly: HealthCare/Preferred Laboratories, HealthCare/MetPath, CORNING Clinical Laboratories)
Quest Diagnostics Incorporated, 8000 Sovereign Row, Dallas, TX 75247, 214–638–1301 (Formerly: SmithKline Beecham Clinical Laboratories, SmithKline Bio-Science Laboratories)
Quest Diagnostics Incorporated, 4770 Regent Blvd., Irving, TX 75063, 972–916–3376/800–526–0947 (Formerly: Damon Clinical Laboratories, Damon/MetPath, CORNING Clinical Laboratories)
Quest Diagnostics Incorporated, 801 East Dixie Ave., Suite 105A, Leesburg, FL 34748, 352–787–9006x4343 (Formerly: SmithKline Beecham Clinical Laboratories, Doctors & Physicians Laboratory)
Quest Diagnostics Incorporated, 400 Egypt Rd., Norristown, PA 19403, 610–631–4600/800–877–7484 (Formerly: SmithKline Beecham Clinical Laboratories, SmithKline Bio-Science Laboratories)
Quest Diagnostics Incorporated, 506 E. State Pkwy., Schaumburg, IL 60173, 800–669–6995/847–885–2010 (Formerly: SmithKline Beecham Clinical Laboratories, International Toxicology Laboratories)
Quest Diagnostics Incorporated, 7470 Mission Valley Rd., San Diego, CA 92108–4406, 619–686–3200/800–446–4728 (Formerly: Nichols Institute, Nichols Institute Substance Abuse Testing (NISAT), CORNING Nichols Institute, CORNING Clinical Laboratories)
Quest Diagnostics Incorporated, One Malcolm Ave., Teterboro, NJ 07608, 201–393–5590 (Formerly: MetPath, Inc., CORNING MetPath Clinical Laboratories, CORNING Clinical Laboratory)
Quest Diagnostics Incorporated, 7600 Tyrone Ave., Van Nuys, CA 91405, 818–989–2520/800–877–2520 (Formerly: SmithKline Beecham Clinical Laboratories)
San Diego Reference Laboratory, 6122 Nancy Ridge Dr., San Diego, CA 92121, 800–677–7995/858–677–7970
Scientific Testing Laboratories, Inc., 463 Southlake Blvd., Richmond, VA 23236, 804–378–9130
Scott & White Drug Testing Laboratory, 600 S. 25th St., Temple, TX 76504, 254–771–8379/800–749–3788
S.E.D. Medical Laboratories, 5601 Office Blvd., Albuquerque, NM 87109, 505–727–6300/800–999–5227
South Bend Medical Foundation, Inc., 530 N. Lafayette Blvd., South Bend, IN 46601, 219–234–4176
Southwest Laboratories, 2727 W. Baseline Rd., Tempe, AZ 85283, 602–438–8507/800–279–0027
Sparrow Health System, Toxicology Testing Center, St. Lawrence Campus, 1210 W. Saginaw, Lansing, MI 48915, 517–377–0520 (Formerly: St. Lawrence Hospital & Healthcare System)
St. Anthony Hospital Toxicology Laboratory, 1000 N. Lee St., Oklahoma City, OK 73101, 405–272–7052

Toxicology & Drug Monitoring Laboratory, University of Missouri Hospital & Clinics, 2703 Clark Lane, Suite B, Lower Level, Columbia, MO 65202, 573–882–1273

Toxicology Testing Service, Inc., 5426 N.W. 79th Ave., Miami, FL 33166, 305–593–2260

UNILAB, 18408 Oxnard St., Tarzana, CA 91356, 818–996–7300/800–339–4299 (Formerly: MetWest-BPL Toxicology Laboratory)

Universal Toxicology Laboratories, LLC, 9930 W. Highway 80, Midland, TX 79706, 915–561–8851/888–953–8851

*The Standards Council of Canada (SCC) voted to end its Laboratory Accreditation Program for Substance Abuse (LAPSA) effective May 12, 1998. Laboratories certified through that program were accredited to conduct forensic urine drug testing as required by U.S. Department of Transportation (DOT) regulations. As of that date, the certification of those accredited Canadian laboratories will continue under DOT authority. The responsibility for conducting quarterly performance testing plus periodic on-site inspections of those LAPSA-accredited laboratories was transferred to the U.S. DHHS, with the DHHS' National Laboratory Certification Program (NLCP) contractor continuing to have an active role in the performance testing and laboratory inspection processes. Other Canadian laboratories wishing to be considered for the NLCP may apply directly to the NLCP contractor just as U.S. laboratories do. Upon finding a Canadian laboratory to be qualified, the DHHS will recommend that DOT certify the laboratory (**Federal Register**, 16 July 1996) as meeting the minimum standards of the ''Mandatory Guidelines for Workplace Drug Testing'' (59 **Federal Register**, 9 June 1994, Pages 29908–29931). After receiving the DOT certification, the laboratory will be included in the monthly list of DHHS certified laboratories and participate in the NLCP certification maintenance program.

Richard Kopanda,

Executive Officer, Substance Abuse and Mental Health Services Administration.

[FR Doc. 00–27872 Filed 10–31–00; 8:45 am]

BILLING CODE 4160–20–U

DEPARTMENT OF HOUSING AND URBAN DEVELOPMENT

[Docket No. FR–4561–N–73]

Notice of Submission of Proposed Information Collection to OMB; Lead-Based Paint Hazard Control Grant Program Data Collection

AGENCY: Office of the Chief Information Officer, HUD.

ACTION: Notice.

SUMMARY: The proposed information collection requirement described below has been submitted to the Office of Management and Budget (OMB) for review, as required by the Paperwork Reduction Act. The Department is soliciting public comments on the subject proposal.

DATES: December 1, 2000.

ADDRESSES: Interested persons are invited to submit comments regarding this proposal. Comments should refer to the proposal by name and/or OMB approval number (2539–0008) and should be sent to: Joseph F. Lackey, Jr., OMB Desk Officer, Office of Management and Budget, Room 10235, New Executive Office Building, Washington, DC 20503.

FOR FURTHER INFORMATION CONTACT: Wayne Eddins, Reports Management Officer, Q, Department of Housing and Urban Development, 451 Seventh Street, Southwest, Washington, DC 20410; e-mail Wayne_Eddins@HUD.gov; telephone (202) 708–2374. This is not a toll-free number. Copies of the proposed forms and other available documents submitted to OMB may be obtained from Mr. Eddins.

SUPPLEMENTARY INFORMATION: The Department has submitted the proposal for the collection of information, as described below, to OMB for review, as required by the Paperwork Reduction Act (44 U.S.C. Chapter 35). The Notice lists the following information: (1) The title of the information collection proposal; (2) the office of the agency to collect the information; (3) the OMB approval number, if applicable; (4) the description of the need for the information and its proposed use; (5) the agency form number, if applicable; (6) what members of the public will be affected by the proposal; (7) how frequently information submissions will be required; (8) an estimate of the total number of hours needed to prepare the information submission including number of respondents, frequency of response, and hours of response; (9) whether the proposal is new, an extension, reinstatement, or revision of an information collection requirement; and (10) the name and telephone number of an agency official familiar with the proposal and of the OMB Desk Officer for the Department.

This Notice also lists the following information:

Title of Proposal: Lead-Based Paint Hazard Control Grant Data Collection.

OMB Approval Number: 2539–0008.

Form Numbers: HUD–96006.

Description of the Need for the Information and Its Proposed Use: This data collection is necessary to provide timely information to HUD regarding the progress of the grantees implementation the Lead-Based Paint Hazard Control Grant Program and to provide Congress with status reports as required by statute.—Title X of the Housing and Community Development Act of 1992 (PL 102–550).

Frequency of Submission: Quarterly.

	Number of respondents	×	Frequency of response	×	Hours per response	=	Burden hours
Reporting Burden	130		4		12		6,240

Total Estimated Burden Hours: 6,240.

Status: Revision of currently approved collection.

Authority: Section 3507 of the Paperwork Reduction Act of 1995, 44 U.S.C. 35, as amened.

Dated: October 26, 2000.

Wayne Eddins,

Departmental Reports Management Officer, Office of the Chief Information Officer.

[FR Doc. 00–27982 Filed 10–31–00; 8:45 am]

BILLING CODE 4210–01–M

DEPARTMENT OF HOUSING AND URBAN DEVELOPMENT

[Docket No. FR–4560–FA–13]

Announcement of Funding Awards for Fiscal Year 2000 Alaska Native/Native Hawaiian Institutions Assisting Communities Program

AGENCY: Office of the Assistant Secretary for Policy Development and Research, HUD.

ACTION: Announcement of funding awards.

SUMMARY: In accordance with section 102 (a)(4)(C) of the Department of Housing and Urban Development Reform Act of 1989, this document notifies the public of funding awards for Fiscal Year 2000 Alaska Native/Native Hawaiian Institutions Assisting Communities Program. The purpose of this document is to announce the names and addresses of the award winners and the amount of the awards which are to be used to help Alaska Native and Native Hawaiian Institutions of Higher Education expand their role and effectiveness in addressing community development needs in their localities, consistent with the purposes of HUD's Community Development Block Grant program (CDBG).

FOR FURTHER INFORMATION CONTACT: Jane Karadbil, Office of University Partnerships, U.S. Department of Housing and Urban Development, Room 8110, 451 Seventh Street, S.W., Washington, DC 20410, telephone (202) 708–1537, extension 5918. To provide service for persons who are hearing-or-speech-impaired, this number may be reached via TTY by Dialing the Federal Information Relay Service on 1–800–877–TTY, 1–800–877–8339, or 202–708–1455. (Telephone number, other than ''800'' TTY numbers are not toll free.)

SUPPLEMENTARY INFORMATION: The Alaska Native/Native Hawaiian Institutions Assisting Communities Program (HSIAC) was enacted under section 107 of the CDBG appropriation for fiscal year 2000, as part of the ''Veterans Administration, HUD and Independent Agencies Appropriations Act of 2000'' and is administered by the Office of University Partnerships under the Assistant Secretary for Policy Development and Research. In addition to this program, the Office of University Partnerships administers HUD's ongoing grant programs to institutions of higher education as well as creates initiatives through which colleges and universities can bring their traditional missions of teaching, research, service, and outreach to bear on the pressing local problems in their communities.

The Alaska Native/Native Hawaiian Institutions Assisting Communities Program provides funds for a wide range of CDBG-eligible activities including housing rehabilitation and financing, property demolition or acquisition, public facilities, economic development, business entrepreneurship, and fair housing programs. On February 24, 2000 (65 FR 9469), HUD published a Notice of Funding Availability (NOFA) announcing the availability of $2 million in Fiscal Year 2000 funds for the Alaska Native/Native Hawaiian Institutions Assisting Communities Program. The Department reviewed, evaluated and scored the applications received based on the criteria in the NOFA. As a result, HUD two applications were funded. These grants, with their grant amounts are identified below.

The Catalog Federal Domestic Assistance number for this program is 14.515.

In accordance with section 102(a)(4)(C) of the Department of Housing and Urban Development Reform Act of 1989 (Pub. L. 101–235, approved December 15, 1989), the Department is publishing details concerning the recipients of funding awards, as follows:

List of Awardees for Grant Assistance Under the FY 2000 Alaska Native/Hawaiian Institutions Assisting Communities Program Funding Competition, by Name and Address

Pacific/Hawaii

1. University of Hawaii at Manoa, Dr. Lilikala Kame'eleihiwa, University of Hawaii at Manoa, 2530 Dole Street, Honolulu, HI 96822. Grant: $333,280.

Northwest/Alaska

2. Ilisagvik College, Dr. Andrew Hageman, Ilisagvik College, 360 NARL, Barrow, AK 99723. Grant: $332,754.

Dated: October 23, 2000.

Lawrence L. Thompson,

General Deputy Assistant Secretary for Policy Development and Research.

[FR Doc. 00–27981 Filed 10–31–00; 8:45 am]

BILLING CODE 4210–62–P

DEPARTMENT OF HOUSING AND URBAN DEVELOPMENT

[Docket No. FR–4560–FA–12]

Announcement of Funding Awards for Fiscal Year 2000 Community Outreach Partnership Centers Program

AGENCY: Office of the Assistant Secretary for Policy Development and Research, HUD.

ACTION: Announcement of funding awards.

SUMMARY: In accordance with section 102 (a)(4)(C) of the Department of Housing and Urban Development Reform Act of 1989, this document notifies the public of funding awards for Fiscal Year 2000 Community Outreach Partnership Centers Program. The purpose of this document is to announce the names and addresses of the award winners and the amount of the awards which are to be used to establish and operate Community Outreach Partnership Centers that will: (1) Conduct competent and qualified research and investigation on theoretical or practical problems in large and small cities; and (2) facilitate partnerships and outreach activities between institutions of higher education, local communities, and local governments to address urban problems.

FOR FURTHER INFORMATION CONTACT: Jane Karadbil, Office of University Partnerships, U.S. Department of Housing and Urban Development, Room 8110, 451 Seventh Street, S.W., Washington, DC 20410, telephone (202) 708–1537, extension 5918. To provide service for persons who are hearing-or-speech-impaired, this number may be reached via TTY by Dialing the Federal Information Relay Service on 1–800–877–TTY, 1–800–877–8339, or 202–708–1455. (Telephone number, other than ''800'' TTY numbers are not toll free.)

SUPPLEMENTARY INFORMATION: The Community Outreach Partnership Centers Program was enacted in the Housing and Community Development Act of 1992 (Pub. L. 102–550, approved October 28, 1992) and is administered by the Office of University Partnerships under the Assistant Secretary for Policy Development and Research. In addition to this program, the Office of University

Partnerships administers HUD's ongoing grant programs to institutions of higher education as well as creates initiatives through which colleges and universities can bring their traditional missions of teaching, research, service, and outreach to bear on the pressing local problems in their communities.

The Community Outreach Partnership Centers Program provides funds for: research activities which have practical application for solving specific problems in designated communities and neighborhoods; outreach, technical assistance and information exchange activities which are designed to address specific problems associated with housing, economic development, neighborhood revitalization, infrastructure, health care, job training, education, crime prevention, planning, and community organizing. On February 24, 2000 (65 FR 9405), HUD published a Notice of Funding Availability (NOFA) announcing the availability of $8 million in Fiscal Year 2000 funds for the Community Outreach Partnership Centers Program. The Department reviewed, evaluated and scored the applications received based on the criteria in the NOFA. As a result, HUD has funded 16 applications for New Grants and 8 applications for New Directions Grants . New Grants, which cannot exceed $400,000, are for institutions of higher education just beginning a COPC project. New Directions Grants, which cannot exceed $150,000, are for institutions of higher education that are undertaking new activities or expanding into new neighborhoods. These grants, with their grant amounts are identified below.

The Catalog Federal Domestic Assistance number for this program is 14.511.

In accordance with section 102(a)(4)(C) of the Department of Housing and Urban Development Reform Act of 1989 (Pub. L. 101–235, approved December 15, 1989), the Department is publishing details concerning the recipients of funding awards, as follows:

List of Awardees for Grant Assistance Under the FY 2000 Community Outreach Partnership Centers Funding Competition, by Name and Address

New England

1. Trinity College, Alta Lash, Trinity College, 300 Summit Street, Hartford, CT 06106. Grant: $149,984.

2. University of Rhode Island, Dr. Marcia Marker Feld, University of Rhode Island, 70 Lower College Road, Kingston, RI 02881. Grant: $150,000.

New York/New Jersey

3. Medgar Evers College, Dr. E. Thomas Oliver, Medgar Evers College, 1150 Carroll Street, Brooklyn, NY 11225. Grant: $399,663.

Mid-Atlantic

4. Danville Community College, Martha A. Walker, Danville Community College, 1008 South Main Street, Danville, VA 24541. Grant: $391,903.

5. Duquesne University, Dr. Evan Stoddard, Duquesne University, 600 Forbes Avenue, 403 Administration Building, Pittsburgh, PA 15282. Grant: $150,000.

6. Tidewater Community College, Mary Ruth Clowdsley, Tidewater Community College, 7000 College Drive, Portsmouth, VA 23703. Grant: $395,227.

7. University of Pennsylvania, Dr. Ira Harkavy, University of Pennsylvania, 133 South 36th Street, Mezzanine, Philadelphia, PA 19104. Grant: $150,000.

8. University of Pittsburgh, Tracy Soska, University of Pittsburgh, 350 Thackeray Hall, Pittsburgh, PA 15260. Grant: $399,702.

Southeast/Caribbean

9. Auburn University, Dr. Robert Montjoy, Auburn University, Auburn University, AL 36849. Grant: $382,267.

10. Barry University, Dr. Jacqueline Mondros, Barry University, 11300 Northeast 2nd Avenue, Miami Shores, FL 33161. Grant: $399,982.

11. University of Memphis, Dr. David Cox, University of Memphis, Memphis, TN 38152. Grant: $149,940.

Midwest

12. Ball State University, Eric Kelly, Ball State University, 2000 University Avenue, Muncie, IN 47306. Grant: $398,529.

13. DePaul University, Jerry Watson, DePaul University, 1 East Jackson Blvd., Chicago, IL 60604. Grant: $150,000.

14. Indiana University, Northwest, Dan Lowry, Indiana University, Northwest, P.O. Box 1847, Bloomington, IN 46402. Grant: $399,973.

15. Medical College of Wisconsin, Dr. Cheryl Maurana, Medical College of Wisconsin, 8701 Watertown Plank Road, Milwaukee, WI 53226. Grant: $398,037.

16. University of Wisconsin-Parkside, Dr. Anne Statham, University of Wisconsin-Parkside, 900 Wood Road, Box 2000, Kenosha, WI 53141. Grant: $150,000.

17. Western Michigan University, Sharon Anderson, Western Michigan University, Kalamazoo, MI 49008. Grant: $399,996.

18. Youngstown State University, Dr. Gil Peterson, Youngstown State University, One University Plaza, Youngstown, OH 44555. Grant: $399,952.

Southwest

19. Texas A&M University, Kermit Black, Texas A&M University, 3121 TAMU, College Station, TX 77843. Grant: $150,000.

Great Plains

20. University of Northern Iowa, Dr. R. Allen Hays, University of Northern Iowa, Cedar Falls, IA 50614. Grant: $382,063.

Rocky Mountains

21. University of Denver, Dr. David Lisman, University of Denver, 2199 S. University Blvd., Denver, CO 80208. Grant: $355,602.

Pacific/Hawaii

22. California State University, Hayward, Dr. Nan Maxwell, California State University, Hayward, 25976 Carlos Bee Blvd., Hayward, CA 94542. Grant: $400,000.

23. University of Southern California, Dr. Tridib Banerjee, University of Southern California, University Campus Park, Los Angeles, CA 90089. Grant: $400,000.

Northwest/Alaska

24. Seattle Central Community College, Dr. A. Barretto Ogilvie, Seattle Central Community College, 1701 Broadway, 2BE 4180J, Seattle, WA 98122. Grant: $372,775.

Dated: October 23, 2000.

Lawrence L. Thompson,

General Deputy Assistant Secretary for Policy Development and Research.

[FR Doc. 00–27979 Filed 10–31–00; 8:45 am]

BILLING CODE 4210–62–P

DEPARTMENT OF HOUSING AND URBAN DEVELOPMENT

[Docket No. FR–4560–FA–14]

Announcement of Funding Awards for Fiscal Year 2000 Hispanic-serving Institutions Assisting Communities Program

AGENCY: Office of the Assistant Secretary for Policy Development and Research, HUD.

ACTION: Announcement of funding awards.

SUMMARY: In accordance with section 102 (a)(4)(C) of the Department of Housing and Urban Development Reform Act of 1989, this document

notifies the public of funding awards for Fiscal Year 2000 Hispanic-serving Institutions Assisting Communities Program. The purpose of this document is to announce the names and addresses of the award winners and the amount of the awards which are to be used to help Hispanic-serving Institutions of Higher Education expand their role and effectiveness in addressing community development needs in their localities, consistent with the purposes of HUD's Community Development Block Grant program (CDBG).

FOR FURTHER INFORMATION CONTACT: Jane Karadbil, Office of University Partnerships, U.S. Department of Housing and Urban Development, Room 8110, 451 Seventh Street, S.W., Washington, DC 20410, telephone (202) 708–1537, extension 5918. To provide service for persons who are hearing-or-speech-impaired, this number may be reached via TTY by Dialing the Federal Information Relay Service on 1–800–877–TTY, 1–800–877–8339, or 202–708–1455. (Telephone number, other than ''800'' TTY numbers are not toll free.)

SUPPLEMENTARY INFORMATION: The Hispanic-serving Institutions Assisting Communities Program (HSIAC) was enacted under section 107 of the CDBG appropriation for fiscal year 2000, as part of the ''Veterans Administration, HUD and Independent Agencies Appropriations Act of 2000'' and is administered by the Office of University Partnerships under the Assistant Secretary for Policy Development and Research. In addition to this program, the Office of University Partnerships administers HUD's ongoing grant programs to institutions of higher education as well as creates initiatives through which colleges and universities can bring their traditional missions of teaching, research, service, and outreach to bear on the pressing local problems in their communities.

The Hispanic-serving Institutions Assisting Communities Program provides funds for a wide range of CDBG-eligible activities including housing rehabilitation and financing, property demolition or acquisition, public facilities, economic development, business entrepreneurship, and fair housing programs. On February 24, 2000 (65 FR 9455), HUD published a Notice of Funding Availability (NOFA) announcing the availability of $6.5 million in Fiscal Year 2000 funds for the Hispanic-serving Institutions Assisting Communities Program. The Department reviewed, evaluated and scored the applications received based on the criteria in the NOFA. As a result, HUD 15 applications were funded. These grants, with their grant amounts are identified below.

The Catalog Federal Domestic Assistance number for this program is 14.514.

In accordance with section 102(a)(4)(C) of the Department of Housing and Urban Development Reform Act of 1989 (Pub. L. 101–235, approved December 15, 1989), the Department is publishing details concerning the recipients of funding awards, as follows:

List of Awardees for Grant Assistance Under the FY 2000 Hispanic-serving Institutions Assisting Communities Program Funding Competition, by Name and Address

New York/New Jersey

1. Hudson County Community College, Dr. Estelle Greenberg, Hudson County Community College, 25 Journal Square, Jersey City, NJ 07306. Grant: $398,826.

Southwest

2. Albuquerque Technical Vocational Institute, Dr. John Walstrum, Albuquerque Technical Vocational Institute, 525 Buena Vista SW, Albuquerque, NM 87106. Grant: $400,000.
3. El Paso Community College, C. Alfred Lawrence, El Paso Community College, P.O. Box 20500, El Paso, RX 79998. Grant: $399,000.
4. Houston Community College, Helga Mattei, Houston Community College, P.O. Box 7849, 22 Waugh Drive, Houston, TX 77270. Grant: $395,000.
5. Midland College, Rebecca Bell, Midland College, 3600 N. Garfield, Midland, TX 79705. Grant: $400,000.
6. New Mexico State University-Dona Ana Branch Community College, Dr. Majorie Burr, New Mexico State University-Dona Ana Branch Community College, Box 30001, MSC 3DA, Las Cruces, NM 88003. Grant: $400,000.
7. Palo Alto College, Mike Floes, Palo Alto College, 1400 W. Villaret, San Antonio, TX 78224. Grant: $362,720.
8. University of New Mexico, Teresa Cordova, University of New Mexico, 105 Scholes Hall, Albuquerque, NM 87131. Grant: $398,388.
9. University of Texas at El Paso, Jeanette Holmes, University of Texas at El Paso, 500 West University Avenue, El Paso, TX 79968. Grant: $399,964.

Rocky Mountains

10. University of Southern Colorado, C.J. Crumley, University of Southern Colorado, 2200 Bonforte Blvd., Pueblo, CO 81001. Grant: $400,000.

Pacific/Hawaii

11. Arizona Western College, Dr. Cheryl Johnson, Arizona Western College, P.O. Box 929, Yuma, AZ 85366. Grant: $374,548.
12. California State University, Northridge, Dr. Jorge Garcia, California State University, Northridge, 18111 Nordhoff Street, Northridge, CA 91330. Grant: $400,000.
13. Merced College, Don Curtaz, Merced College, 3600 M Street, Merced, CA 95348. Grant: $400,000.
14. San Diego State University, Imperial Valley Campus, Suzanna Fuentes-Ferreiro, San Diego State University, Imperial Valley, 5250 Campanile Drive, San Diego, CA 92182. Grant: $400,000.
15. Yosemite Community College District, Modesto Junior College, Dr. Tom Bennett, Yosemite Community College District, Modesto Junior College, 2201 Blue Gum Avenue, P.O. Box 65, Modesto, CA 95352. Grant: $400,000.

Dated: October 23, 2000.

Lawrence L. Thompson,

General Deputy Assistant Secretary for Policy Development and Research.

[FR Doc. 00–27981 Filed 10–31–00; 8:45 am]

BILLING CODE 4210–62–P

DEPARTMENT OF THE INTERIOR

Bureau of Land Management

NV–020–1220–XQ

Sierra Front-Northwestern Great Basin Resource Advisory Council—Notice of Meeting Location and Time, Nevada

AGENCY: Bureau of Land Management, Interior.

ACTION: Special Resource Advisory Council Meeting—Black Rock Desert Management Plan.

SUMMARY: In accordance with the Federal Land Policy and Management Act and the Federal Advisory Committee Act of 1972 (FACA), a Department of the Interior, Bureau of Land Management (BLM) Resource Advisory Council meeting will be held as indicated below. Topics for discussion include the review of public comments received on the Black Rock Desert Management Plan, and the time line proposed for completion of the final management plan and environmental impact statement. This meeting is open to the public. The public may present written comments to the Council. The public comment period for items

discussed at this Council meeting will be at such time during the meeting as determined by the Council Chairman. Individuals who plan to attend and need further information about the meeting, should contact Les Boni at the Winnemucca Field Office, BLM, 5100 E. Winnemucca Blvd., Reno, Nevada 89445, or by telephone at (775) 623–1500.

LOCATION, DATE AND TIME: The Council will meet on Monday, December 4, 2000, from 9 a.m. to 4:30 p.m., at the Fernley Town Complex, 595 Silver Lace Blvd., Fernley, Nevada.

FOR FURTHER INFORMATION CONTACT: Les Boni, Assistant Field Manager Nonrenewable Resources, Winnemucca Field Office, 5100 E. Winnemucca Blvd., Winnemucca, Nevada 89445, telephone (775) 623–1500.

Colin P. Christensen,

Acting Winnemucca Field Manager.

[FR Doc. 00–28004 Filed 10–31–00; 8:45 am]

BILLING CODE 4310–HC–P

INTERNATIONAL TRADE COMMISSION

[Investigations Nos. 303–TA–21 (Review) and 731–TA–451, 461, and 519 (Review)]

Gray Portland Cement and Cement Clinker From Japan, Mexico, and Venezuela [1]

Determinations

On the basis of the record [2] developed in the subject five-year reviews, the United States International Trade Commission determines,[3] pursuant to section 751(c) of the Tariff Act of 1930 (19 U.S.C. § 1675(c)) (the Act), that revocation of the antidumping duty orders on gray portland cement and cement clinker from Japan and Mexico would be likely to lead to continuation or recurrence of material injury to an industry in the United States within a reasonably foreseeable time [4] and that termination of the suspended investigations on gray portland cement and cement clinker from Venezuela would not be likely to lead to continuation or recurrence of material injury to an industry in the United States within a reasonably foreseeable time.

Background

The Commission instituted these reviews on August 2, 1999 (64 F.R. 41958) and determined on November 4, 1999 that it would conduct full reviews (64 F.R. 62689, November 17, 1999). Notice of the scheduling of the Commission's reviews and of a public hearing to be held in connection therewith was given by posting copies of the notice in the Office of the Secretary, U.S. International Trade Commission, Washington, DC, and by publishing the notice in the **Federal Register** on April 5, 2000 (65 F.R. 17901).[5] The hearing was held in Washington, DC, on August 15, 2000, and all persons who requested the opportunity were permitted to appear in person or by counsel.

The Commission transmitted its determinations in these investigations to the Secretary of Commerce on October 25, 2000. The views of the Commission are contained in USITC Publication 3361 (October 2000), entitled Gray Portland Cement and Cement Clinker from Japan, Mexico, and Venezuela: Investigations Nos. 303–TA–21 (Review) and 731–TA–451, 461, and 519 (Review).

Issued: October 27, 2000.

By order of the Commission.

Donna R. Koehnke,

Secretary.

[FR Doc. 00–28040 Filed 10–31–00; 8:45 am]

BILLING CODE 7020–02–P

DEPARTMENT OF LABOR

Employment and Training Administration

[TA–W–38,129]

Eramet Marietta, Inc., Marietta, OH; Notice of Termination of Investigation

Pursuant to Section 221 of the Trade Act of 1974, an investigation was initiated on September 25, 2000, in response to a petition filed by a company official on behalf of workers at Eramet Marietta, Incorporated, Marietta, Ohio.

The petition group of workers is subject to an ongoing investigation for which a determination has not yet been issued (TA–W–38,113). Consequently, further investigation in this case would serve no purpose, and the investigation has been terminated.

Signed in Washington, DC this 16th day of October, 2000.

Linda G. Poole,

Certifying Officer, Division of Trade Adjustment Assistance.

[FR Doc. 00–28032 Filed 10–31–00; 8:45 am]

BILLING CODE 4510–30–M

DEPARTMENT OF LABOR

Employment and Training Administration

[TA–W–36,633 and TA–W–36,633AA]

Levi Strauss & Company, Wichita Falls Plant, Wichita Falls, Texas; Levi Strauss & Company, Walnut Creek Road Office, Walnut Creek, California; Amended Certification Regarding Eligibility to Apply for Worker Adjustment Assistance

In accordance with Section 223 of the Trade Act of 1974 (19 U.S.C. 2273) the Department of Labor issued a Certification of Eligibility to Apply for Worker Adjustment Assistance on August 11, 1999, applicable to workers of Levi Strauss & Company, Wichita Falls Plant, Wichita Falls, Texas. The notice was published in the **Federal Register** on September 29, 1999 (64 FR 52541). The certification document was amended several times to include numerous facilities located at various locations.

At the request of the company, the Department reviewed the certification for workers of the subject firm. The workers are engaged in the production of denim and Docker apparel. The company reports that worker separations occurred at the Walnut Creek Road Office of Levi Strauss located in Walnut Creek, California. The Walnut Creek Road Office is a satellite office of the subject firms' headquarters located in San Francisco, California and directly supports Levi Strauss's many production facilities.

The intent of the Department's certification is to include all workers of Levi Strauss & Company adversely affected by increased imports. Accordingly, the Department is amending the certification to include workers of Levi Strauss & Company, Walnut Creek Road Office, Walnut Creek, California.

The amended notice applicable to TA–W–36,633 is hereby issued as follows:

All workers of Levi Strauss & Company, Wichita Falls Plant, Wichita Falls, Texas (TA–W–36,633) and Walnut Creek Road Office, Walnut Creek, California (TA–W–36,633AA) who became totally or partially separated from employment on or after

[1] The investigation numbers are as follows: Japan is 731–TA–461 (Review); Mexico is 731–TA–451 (Review); and Venezuela is 303–TA–21 (Review) and 731–TA–519 (Review).

[2] The record is defined in sec. 207.2(f) of the Commission's Rules of Practice and Procedure (19 CFR § 207.2(f)).

[3] Commissioner Bragg not participating.

[4] Commissioner Askey dissenting.

[5] The Commission revised and extended its schedule for these reviews on September 7, 2000 (65 F.R. 55269, September 13, 2000).

August 8, 1999 through August 11, 2001 are eligible to apply for adjustment assistance under Section 223 of the Trade Act of 1974.

Signed in Washington, D.C. this 19th day of October, 2000.

Linda G. Poole,

Certifying Officer, Division of Trade Adjustment Assistance.

[FR Doc. 00–28026 Filed 10–31–00; 8:45 am]

BILLING CODE 4510–30–M

DEPARTMENT OF LABOR

Employment and Training Administration

[TA–W–38,005]

Maxco-Tech Designs, Inc., Edgewater, NJ; Notice of Termination of Investigation

Pursuant to Section 221 of the Trade Act of 1974, an investigation was initiated on August 28, 2000 in response to a petition filed by a company official on the same date on behalf of workers at Maxco-Tech Designs, Inc., Edgewater, New Jersey.

The petitioner has requested that the petition be withdrawn. Consequently, further investigation in this case would serve no purpose, and the investigation has been terminated.

Signed in Washington, DC this 16th day of October, 2000.

Linda G. Poole,

Certifying Officer, Division of Trade Adjustment Assistance.

[FR Doc. 00–28031 Filed 10–31–00; 8:45 am]

BILLING CODE 4510–30–M

DEPARTMENT OF LABOR

Employment and Training Administration

[TA–W–38,115]

Wallowa Forest Products, Wallowa, Oregon; Notice of Revised Determination on Reopening

On October 18, 2000, the company requested Administrative Reconsideration for workers and former workers of the subject firm engaged in the production of stud lumber.

The initial investigation resulted in a negative determination issued on October 3, 2000, because imports did not contribute importantly to the worker separations. The notice soon will be published in the **Federal Register**.

New information submitted to the Department by the company and additional information supplied by a primary customer of the subject firm revealed that the customer has increased purchases of imported stud lumber while reducing purchases from the subject firm.

Conclusion

After careful consideration of the new facts obtained on reopening, it is concluded that increased imports of articles like or directly competitive with apparel produced by the subject firm contributed importantly to the decline in sales and to the total or partial separation of workers of the subject firm. In accordance with the provisions of the Trade Act of 1974, I make the following revised determination:

All workers of Wallowa Forest Products, Wallowa, Oregon, who became totally or partially separated from employment on or after June 27, 1999 through two years from the date of this certification are eligible to apply for adjustment assistance under Section 223 of the Trade Act of 1974.

Signed at Washington, DC this 19th day of October 2000.

Linda G. Poole,

Certifying Officer, Division of Trade Adjustment Assistance.

[FR Doc. 00–28025 Filed 10–31–00; 8:45 am]

BILLING CODE 4510–30–M

DEPARTMENT OF LABOR

Employment and Training Administration

[NAFTA–04107 and NAFTA–04107A]

American Bag Corporation, Stearns, KY; American Bag Corporation, Winfield, TN; Amended Certification Regarding Eligibility To Apply for NAFTA-Transitional Adjustment Assistance

In accordance with Section 250(a), Subchapter D, Chapter 2, Title II, of the Trade Act of 1974, as amended (19 USC 2273), the Department of Labor issued a Certification of Eligibility to Apply for NAFTA Transitional Adjustment Assistance on September 20, 2000, applicable to workers of American Bag Corporation, Stearns, Kentucky. The notice was published in the **Federal Register** on October 12, 2000 (65 FR 60687).

At the request of the company, the Department reviewed the certification for workers of the subject firm. The company reports that worker separations occurred at the Winfield, Tennessee facility of American Bag Corporation. The workers are engaged in the production of air bags.

The intent of the Department's certification is to include all workers of American Bag Corporation affected by increased imports from Canada and Mexico. Accordingly, the Department is amending the certification to include workers of American Bag Corporation, Winfield, Tennessee.

The amended notice applicable to NAFTA–04107 is hereby issued as follows:

All workers of American Bag Corporation, Stearns, Kentucky (NAFTA–04107) and Winfield, Tennessee (NAFTA–04107A) who became totally or partially separated from employment on or after August 23, 1999 through September 20, 2002, are eligible to apply for NAFTA–TAA under Section 250 of the Trade Act of 1974.

Signed in Washington, DC, this 23rd day of October, 2000.

Linda G. Poole,

Certifying Officer, Division of Trade Adjustment Assistance.

[FR Doc. 00–28030 Filed 10–31–00; 8:45 am]

BILLING CODE 4510–30–M

DEPARTMENT OF LABOR

Employment and Training Administration

[NAFTA—4070]

Consolidated Metco, Inc, Rivergate Plant, Portland, Oregon; Notice of Termination of Investigation

Pursuant to Title V of the North American Free Trade Agreement Implementation Act and in accordance with Section 250(a), Subchapter D, Chapter 2, Title II of the Trade Act of 1974, as amended (19 U.S.C. 2331), an investigation was initiated on August 10, 2000, in response to a worker petition which was filed by the International Association of Machinists and Aerospace Workers, District 24, Local Lodge 1432, on behalf of workers at Consolidated Metco, Inc., Rivergate Plant, Portland, Oregon.

The petitioner has requested that the petition be withdrawn. Consequently further investigation in this case would serve no purpose, and the investigation has been terminated.

Signed in Washington, D.C. this 20th day of October, 2000.

Linda G. Poole,

Certifying Officer, Division of Trade Adjustment Assistance.

[FR Doc. 00–28024 Filed 10–31–00; 8:45 am]

BILLING CODE 4510–30–M

DEPARTMENT OF LABOR

Employment and Training Administration

[NAFTA—03325 and 03325AA]

Levi Strauss & Company Wichita Falls Plant, Wichita Falls, TX and Walnut Creek Road Office, Walnut Creek, CA; Amended Certification Regarding Eligibility to Apply for NAFTA-Transitional Adjustment Assistance

In accordance with Section 250(a), Subchapter D, Chapter 2, Title II, of the Trade Act of 1974, as amended (19 USC 2273), the Department of Labor issued a Certification of Eligibility to Apply for NAFTA Transitional Adjustment Assistance on August 11, 1999, applicable to workers of Levi Strauss & Company, Wichita Falls Plant, Wichita Falls, Texas. The notice was published in the **Federal Register** on September 29, 1999 (64 FR 52543). The certification document was amended several times to include numerous facilities located at various locations.

At the request of the company, the Department reviewed the certification for workers of the subject firm. The workers are engaged in the production of denim and Docker apparel. The company reports that worker separations occurred at the Walnut Creek Road Office of Levi Strauss located in Walnut Creek, California. The Walnut Creek Road Office is a satellite office of the subject firms' headquarters in San Francisco, California and directly supports Levi Strauss's many production facilities. The intent of the Department's certification is to include all workers of Levi Strauss and Company who were adversely affected by increased imports of denim and Docker apparel from Mexico.

The amended notice applicable to NAFTA—03325 is hereby issued as follows:

All workers of Levi Strauss & Company, Wichita Falls Plant, Wichita Falls, Texas (NAFTA–03325) and Walnut Creek Road Office, Walnut Creek, California (NAFTA–03325AA) who became totally or partially separated from employment on or after August 8, 1999 through August 11, 2001 are eligible to apply for NAFTA–TAA under Section 250 of the Trade Act of 1974.

Signed in Washington, DC this 19th day of October, 2000.

Linda G. Poole,

Certifying Officer, Division of Trade Adjustment Assistance.

[FR Doc. 00–28029 Filed 10–31–00; 8:45 am]

BILLING CODE 4510–30–M

DEPARTMENT OF LABOR

Employment and Training Administration

[NAFTA–03980]

Morton Forest Products a.k.a. Tree Source, Morton, Washington; Notice of Revised Determination on Reconsideration

On August 18, 2000, the Department issued a Negative Determination Regarding Eligibility to apply for NAFTA–TAA, applicable to workers and former workers of Morton Forest Products, a.k.a. Tree Source, located in Morton, Washington. The notice was published in the **Federal Register** on September 12, 2000 (65 FR 55050).

By letter of September 20, 2000, the company requested administrative reconsideration regarding the Department's denial of NAFTA–TAA for workers of the subject firm. Workers at Morton Forest Products, located in Morton, Washington, were engaged in the manufacture of stud lumber. The company claimed that the Department did not survey sufficient customers and provided a list of additional customers of stud lumber.

The initial determination was based on customer surveys which indicated that imports did not contribute importantly to the worker separations at Morton Forest Products. On reconsideration, the Department surveyed additional customers. The results of the additional customer survey revealed that two major customers of the subject firm increased their reliance on purchases of imported stud lumber from Canada while reducing purchases of domestically manufactured stud lumber.

Conclusion

After careful review of the additional facts obtained on reconsideration, I conclude that there were increased imports from Canada of articles like or directly competitive with those produced by the subject firm. In accordance with the provisions of the Trade Act, I make the following certification:

All workers of Morton Forest Products, a.k.a. Tree Source, located in Morton, Washington engaged in employment related to the production of stud lumber who became totally or partially separated from employment on or after June 16, 1999 through two years from the issuance of this revised determination are eligible to apply for NAFTA–TAA under Section 250 of the Trade Act of 1974.

Signed in Washington, DC this 19th day of October 2000.

Linda G. Poole,

Certifying Officer, Division of Trade Adjustment Assistance.

[FR Doc. 00–28028 Filed 10–31–00; 8:45 am]

BILLING CODE 4510–30–M

DEPARTMENT OF LABOR

Employment and Training Administration

Notice of Determinations Regarding Elibility to Apply for Worker Adjustment Assistance and NAFTA Transitional Adjustment Assistance

In accordance with Section 223 of the Trade Act of 1974, as amended, the Department of Labor herein presents summaries of determinations regarding eligibility to apply for trade adjustment assistance for workers (TA–W) issued during the period of October, 2000.

In order for an affirmative determination to be made and a certification of eligibility to apply for worker adjustment assistance to be issued, each of the group eligibility requirements of Section 222 of the Act must be met.

(1) that a significant number or proportion of the workers in the workers' firm, or an appropriate subdivision thereof, have become totally or partially separated,

(2) that sales or production, or both, of the firm or subdivision have decreased absolutely, and

(3) that increases of imports of articles like or directly competitive with articles produced by the firm or appropriate subdivision have contributed importantly to the separations, or threat thereof, and to the absolute decline in sales or production.

Negative Determination for Worker Adjustment Assistance

In each of the following cases the investigation revealed that criterion (3) has not been met. A survey of customers indicated that increased imports did not contribute importantly to worker separations at the firm.

TA–W–38,115; Wallowa Forest Products, Wallowa, OR

TA–W–37,831 & A; Occedental Chemical Corp., Buffalo Avenue–Niagara Falls Plant, Niagara Falls, NY and Grand Island Technology Center, Grand Island, NY

TA–W–38,007; Tredegar Corp., Film Products, Manchester, IA

TA–W–38,061; TRW, Valve Div., Danville, PA

TA–W–37,925; Wiscassett Mills Co., Plant #6, Albemarle, NC

TA–W–37,922; Vantage Textile, d/b/a/ Fall River Mill, Fall River, MA
TA–W–37,960; Vincennes Manufacturing, Torsion Assemblies, Vincennes, TN

In the following cases, the investigation revealed that the criteria for eligibility have not been met for the reasons specified.

TA–W–38,128; Fujitsu Computer Products of America (F.C.P.A), Cleanroom, Hillsboro, OR
TA–W–38,122 & A, B; Equitable Production, Kingsport, TN, Nora, VA and Big Stone Gap, VA
TA–W–38,109; C & P Trucking Co., Inc., Attalla, AL

The workers firm does not produce an article as required for certification under Section 222 of the Trade Act of 1974.

TA–W–38,088; Heinz Pet Products Co., El Paso, TX
TA–W–38,075; Wyman Gordon, Buffalo, NY
TA–W–38,068; Boeing Commercial Aircraft Group, Salt Lake City, UT
TA–W–38,050; Shipley Ronal, Freeport, NY
TA–W–37,966; Republic Technologies International, Johnstown, PA
TA–W–38,034; Lucchese, Inc., El Paso, TX
TA–W–37,971; ARCO, d/b/a/ ARCO Exploration and Production Technology (AETP), Plano, TX
TA–W–38,060; The Gaden Grow Co., Lilly Miller Packet Seed Div., Wilsonville, OR
TA–W–38,008; Cytec Industries, Wallingford, CT

Increased imports did not contribute importantly to worker separations at the firm.

Affirmative Determinations for Worker Adjustment Assistance

The following certifications have been issued; the date following the company name and location of each determination references the impact date for all workers of such determination

TA–W–37,974; General Binding Corp., Automated Finishing Div., Auburn, Hills, MI: August 8, 1999.
TA–W–37,995; Tyco Electronics, Boyne City, MI: August 10, 1999.
TA–W–38,167; Ametek Aerospace, Wilmington, MA: September 18, 1999.
TA–W–37,934; the Pietrafesa Corp., a/k/ a MS Pietrafesa LP, Liverpool, NY: July 10, 1999.
TA–W–38,099; Delco Remy America, Anderson, IN: September 6, 1999.
TA–W–38,036; Midwest Electric Producs, Inc., Mankato, MN: August 9, 1999.
TA–W–38,058; Kountry Kreations, Towanda, PA: August 24, 1999.
TA–W–37,938, Angelic Image Apparel, Louisville, MA: July 21, 1999.
TA–W–38,066; Xerox Corp., Banbury Toner Operations, Oklahoma City, OK: August 25, 1999.
TA–W–38,157; Ashland Chemical Co., Ashtabula, OH: September 11, 1999.
TA–W–37,843; Drumond Co., Inc., Shoal Creek Mine, Adger, AL: June 20, 1999.
TA–W–38,114; American Identify, Fairbury, NE: September 12, 1999.
TA–W–38,044; Louisiana Pacific Corp., Engineered Wood Products, Hines, OR: August 17, 1999.
TA–W–38,051; Burlington House Home Fashions, Stokesdale, NC: August 21, 1999.
TA–W–38,125; Santa's Best, Plush Div., Millville, NJ: October 15, 2000.
TA–W–38,079; Fawn Industries, Middlesex, NC: September 1, 1999.
TA–W–38,085; Evy of California, Los Angeles, CA: September 6, 1999.
TA–W–38,033; WTTC, Inc., Cutting Dept., Raymondville, TX: August 18, 1999.
TA–W–37,961; Jammies Manufacturing, Inc., Perth Amboy, NJ: September 31, 1999.
TA–W–38,106; Abbeville Shirtmakers, Inc., Abbeville, SC: September 7, 1999.
TA–W–38,082; Scotty's Fashions, Palmerton, PA: August 31, 1999.
TA–W–38,096; Ultima Trim, Inc., Los Indios, TX: September 1, 1999.
TA–W–37,992; Lund International, Lund Industries, Inc., Anoka, MN: August 7, 1999.
TA–W–37,956; Jockey International, Inc., Hsiery Div., Randleman, NC: August 1, 1999.
TA–W–38,027; Great Lakes Chemical Corp., Polymer Additives, Div., Laredo, TX: August 2, 1999.
TA–W–37,856; Seagate Technology, Inc., Recording Media Operations, Anaheim, CA: June 6, 1999.
TA–W–38,178; Flowserve Corp., Pump Div., Phillipsburg, NJ: September 14, 1999.
TA–W–38,002; Genlyte Thomas Group LLC, Hopkinsville, KY: August 1, 1999.
TA–W–37,910; Mallinckrodt, Inc., Respiratory Div., Carlsbad, CA: July 5, 1999.
TA–W–38,104; Garan Manufacturing Corp., Jemison, AL: August 30, 1999.
TA–W–38,108; Airboss Polymer Products Corp., South Haven, MI: September 7, 1999.
TA–W–37,964; Hampton Industries, Kingston, NC: July 20, 1999.
TA–W–38,023; Martin Mills, Inc., d/b/a Fruit of The Loom, Jet Sew Dept. St. Martinsville, LA: August 31, 1999.
TA–W–37,873 & A; Springs Industries, Inc., baby Products Div., Carvey Road Plant, Giffin, GA and Jackson Plant, Jackson, GA: June 24, 1999.
TA–W–38,028; Playtex Apparel, Inc., Newnan, GA: August 18, 1999.
TA–W–37,889 & A; Crown Pacific, Gilchrist, OR and Prineville, OR Including Temporary Workers of Mid Oregon Labor Contractors, Express Personnel and Labor Ready Employed at Crown Pacific, Gilchrist, OR and Prineville, OR: February 11, 2000.
TA–W–37,893; IKG Industries, North Plant, Nashville, TN: June 27, 1999.

Also, pursuant to Title V of the North American Free Trade Agreement Implementation Act (P.L. 103–182) concerning transitional adjustment assistance hereinafter called (NAFTA–TAA) and in accordance with Section 250(a), Subchapter D, Chapter 2, Title II, of the Trade Act as amended, the Department of Labor presents summaries of determinations regarding eligibility to apply for NAFTA–TAA issued during the month of October, 2000.

In order for an affirmative determination to be made and a certification of eligibility to apply to NAFTA–TAA the following group eligibility requirements of Section 250 of the Trade Act must be met:

(1) That a significant number or proportion of the workers in the workers' firm, or an appropriate subdivision thereof, (including workers in any agricultural firm or appropriate subdivision thereof) have become totally or partially separated from employment and either—

(2) that sales or production, or both, of such firm or subdivision have decreased absolutely,

(3) that imports From Mexico or Canada of articles like or directly competitive with articles produced by such firm or subdivision have increased, and that the increases imports contributed importantly to such workers' separations or threat of separation and to the decline in sales or production of such firm or subdivision; or

(4) that there has been a shift in production by such workers' firm or subdivision to Mexico or Canada of articles like or directly competitive with

articles which are produced by the firm or subdivision.

Negative Determinations NAFTA–TAA

In each of the following cases the investigation revealed that criteria (3) and (4) were not met. Imports from Canada or Mexico did not contribute importantly to workers' separations. There was no shift in production from the subject firm to Canada or Mexico during the relevant period.

NAFTA–TAA–04113; U.S. Textiles Corp., Newland, NC

NAFTA–TAA–04101; The Garden Grow Co., Lilly Miller Packet Seed Div., Wilsonville, OR

NAFTA–TAA–04170; Tru-Stitch Footwear, Malone, NY

NAFTA–TAA–03968; Mar-Kel Lighting, Inc., Paris, TN

NAFTA–TAA–04157; Heinz Pet Products Co., El Paso, TX

NAFTA–TAA–04136; Banta Healthcare Group, Lakeland Plant, Eaton Park, FL

The investigation revealed that the criteria for eligibility have not been met for the reasons specified.

NAFTA–TAA–04151 & A; Equitable Production, Kingsport, TN and Nora, VA

NAFTA–TAA–04164; Avalon Payroll Group., Inc., New York, NY

NAFTA–TAA–04159; Fujitsu Computer Products of America (F.C.P.A.), Cleanroom, Hillsboro, OR

NAFTA–TAA–04077; Movies 99/New Movie Corp., Salt lake City, UT

NAFTA–TAA–0486; Eagle Precision Technologies, Inc., Eagle-Eaton Leonard, Carlsbad, CA

The investigation revealed that workers of the subject firm did not produce an article within the meaning of section 250(a) of the Trade Act, as amended.

Affirmative Determinations NAFTA–TAA

NAFTA–TAA–04066; Lund International, Lund Industries, Inc., Anoka, MN: July 31, 1999.

NAFTA–TAA–04100; Great Lakes Chemical Corp., Polymer Additives Div., Laredo, TX: August 2, 1999.

NAFTA–TAA–04116; WTTC, Inc., Cutting Department, Raymondville, TX: August 18, 1999.

NAFTA–TAA–04109; Universal Uniforms, Inc., Universal Denim Service/Garment Finishing Div., Louisville, KY: August 21, 1999.

NAFTA–TAA–04106; Unites States Leather, Lackawanna Leather, El Paso, TX: August 14, 1999.

NAFTA–TAA–04017; & A; Crown Pacific Gilchrist, OR and Prineville, OR Including Temporary Workers of Mid-Oregon Labor Contractors, Express Personnel and Labor Ready Employed at Crown Pacific Gilchrist OR and Prineville, OR: February 11, 2000.

NAFTA–TAA–04166; Flowserve Corp., Pump Div., Phillipsburg, NJ: September 14, 1999.

NAFTA–TAA–04172; Ametek Aerospace, Wilmington, MA: September 18, 1999.

NAFTA–TAA–4138; Delco Remy America, Anderson, IN: September 6, 1999.

NAFTA–TAA–04090; Midwest Electric Products, Mankato, MN: August 9, 1999.

NAFTA–TAA–04000; Spring Industries, Inc., Baby Products Div., Carver Road Plant, Griffin, GA and Jackson Plant, Jackson, GA: June 28, 1999

NAFTA–TAA–04146; AirBoss Polymer Products Corp., South Haven, MI September 7, 1999.

NAFTA–TAA–04128; Fawn Industries, Middlesex, NC: September 1, 1999.

NAFTA–TAA–04117; TRW, Valve Division, Danville, PA: August 23, 1999.

NAFTA–TAA–04118; Louisiana Pacific Corp., Engineered Wood Products, Hines, OR: August 17, 1999.

NAFTA–04074; Jockey International, Inc., Hosiery Div., Randleman, NC: August 1, 1999.

NAFTA–TAA–04135; United States Leather, Lackawanna Leather, Conovar, NC: September 7, 1999.

NAFTA–TAA–04152; Tyco Electronics, Boyne City, MI: August 10, 1999.

NAFTA–TAA–04048; The Pietrafesa Corp., a/k/a MS Pietrafesa LP, Liverpool, NY: July 10, 1999.

NAFTA–TAA–04153; General Binding Corp., Automated Finishing Div., Auburn Hills, MI: September 8, 1999.

NAFTA–TAA–04161; Evy of California, Los Angeles, CA: September 13, 1999.

NAFTA–TAA–04103; Burlington House Home Fashions, Stokesdale, NC: August 21, 1999.

I hereby certify that the aforementioned determinations were issued during the month of October, 2000. Copies of these determinations are available for inspection in Room C–5311, U.S. Department of Labor, 200 Constitution Avenue, NW., Washington, DC 20210 during normal business hours or will be mailed to persons who write to the above address.

Dated: October 25, 2000.

Edward A. Tomchick,

Director, Division of Trade Adjustment Assistance.

[FR Doc. 00–28027 Filed 10–31–00; 8:45 am]

BILLING CODE 4510–30–M

DEPARTMENT OF LABOR

Pension and Welfare Benefits Administration

[Prohibited Transaction Exemption 2000–52; Exemption Application No. L–10667, et al.]

Grant of Individual Exemptions; Kwik Kopy Corporation Employees Welfare Benefit Plan and Trust (the Plan)

AGENCY: Pension and Welfare Benefits Administration, Labor.

ACTION: Grant of Individual Exemptions.

SUMMARY: This document contains exemptions issued by the Department of Labor (the Department) from certain of the prohibited transaction restrictions of the Employee Retirement Income Security Act of 1974 (the Act) and/or the Internal Revenue Code of 1986 (the Code).

Notices were published in the **Federal Register** of the pendency before the Department of proposals to grant such exemptions. The notices set forth a summary of facts and representations contained in each application for exemption and referred interested persons to the respective applications for a complete statement of the facts and representations. The applications have been available for public inspection at the Department in Washington, DC. The notices also invited interested persons to submit comments on the requested exemptions to the Department. In addition the notices stated that any interested person might submit a written request that a public hearing be held (where appropriate). The applicants have represented that they have complied with the requirements of the notification to interested persons. No public comments and no requests for a hearing, unless otherwise stated, were received by the Department.

The notices of proposed exemption were issued and the exemptions are being granted solely by the Department because, effective December 31, 1978, section 102 of Reorganization Plan No. 4 of 1978, 5 U.S.C. App. 1 (1996), transferred the authority of the Secretary of the Treasury to issue exemptions of the type proposed to the Secretary of Labor.

Statutory Findings

In accordance with section 408(a) of the Act and/or section 4975(c)(2) of the Code and the procedures set forth in 29 CFR part 2570, subpart B (55 FR 32836, 32847, August 10, 1990) and based upon the entire record, the Department makes the following findings:

(a) The exemptions are administratively feasible;

(b) They are in the interests of the plans and their participants and beneficiaries; and

(c) They are protective of the rights of the participants and beneficiaries of the plans.

Kwik-Kopy Corporation Employees Welfare Benefit Plan and Trust (the Plan) Located in Cypress Creek, TX

[Prohibited Transaction Exemption 2000–52; Exemption Application No. L–10667]

Exemption

The restrictions of sections 406(a), 406(b)(1) and (b)(2) of the Act shall not apply to the cash sale by the Plan of certain recreational facilities (the Recreational Facilities) to the International Center for Entrepreneurial Development, Inc., the parent of Kwik-Kopy Corporation (Kwik-Kopy), the Plan sponsor, and a party in interest with respect to the Plan.[1]

This exemption is subject to the following requirements:

(a) The proposed sale is a one-time transaction for cash.

(b) The fair market value of the Recreational Facilities has been determined by qualified, independent appraisers who propose to update their valuation of the Recreational Facilities on the date of the sale.

(c) On the date of the sale, the Plan receives an amount which is equal to the greater of the fair market value of the Recreational Facilities or the Plan's total acquisition costs.

(d) The Plan pays no fees or commissions in connection with the proposed sale.

For a more complete statement of the facts and representations supporting the Department's decision to grant this exemption, refer to the notice of proposed exemption published on August 17, 2000 at 65 FR 50223.

Technical Correction

The Department notes that in the notice of proposed exemption, the word ''Copy,'' as used in references to ''Kwik-Copy Corporation'' or ''Kwik Copy,'' has been misspelled. For purposes of this exemption, the Department wishes to point out that correct spelling of the term is ''Kopy.''

FOR FURTHER INFORMATION CONTACT: Ms. Jan D. Broady, of the Department, telephone (202) 219–8881. (This is not a toll-free number.)

American Mutual Holding Company (AMHC) Located in Des Moines, IA

[Prohibited Transaction Exemption 2000–53; Exemption Application No. D–10874]

Exemption

Section I. Covered Transactions

The restrictions of section 406(a) of the Act and the sanctions resulting from the application of section 4975 of the Code, by reason of section 4975(c)(1)(A) through (D) of the Code, shall not apply, effective September 20, 2000, to (1) the receipt of certain common stock (Common Stock) issued by AMHC,[2] or (2) the receipt of cash (Cash) or policy credits (Policy Credits), by or on behalf of a policyowner (the Eligible Member) of AmerUs Life Insurance Company (AmerUs Life), which is an employee benefit plan (the Plan), other than a Plan maintained by AMHC and/or its affiliates, in exchange for such Eligible Member's membership interest in AMHC, in accordance with the terms of a plan of conversion (the Plan of Conversion), implemented under Iowa law.

This exemption is subject to the following conditions set forth below in Section II.

Section II. General Conditions

(a) The Plan of Conversion is subject to approval, review and supervision by the Iowa Commissioner of Insurance (the Commissioner) and is implemented in accordance with procedural and substantive safeguards that are imposed under Iowa law.

(b) The Commissioner reviews the terms and options that are provided to Eligible Members of AMHC as part of such Commissioner's review of the Plan of Conversion and the Commissioner approves the Plan of Conversion following a determination that such Plan is fair and equitable to Eligible Members.

(c) Each Eligible Member has an opportunity to vote to approve the Plan of Conversion after full written disclosure is given to the Eligible Member by AMHC.

(d) Any determination to receive Common Stock, Cash or Policy Credits by an Eligible Member which is a Plan, pursuant to the terms of the Plan of Conversion, is made by one or more Plan fiduciaries which are independent of AMHC and its affiliates and neither AMHC Group nor any of its affiliates exercises any discretion or provides investment advice, within the meaning of 29 CFR 2510.3–21(c), with respect to such decisions.

(e) After each Eligible Member entitled to receive Common Stock is allocated at least 20 shares, additional consideration is allocated to Eligible Members who own participating policies based on actuarial formulas that take into account each participating policy's contribution to the surplus and asset valuation reserve of AMHC, which formulas have been approved by the Commission.

(f) All Eligible Members that are Plans participate in the transactions on the same basis as all Eligible Members that are not Plans.

(g) No Eligible Member pays any brokerage commissions or fees in connection with their receipt of Common Stock or Policy Credits or in connection with the implementation of the commission-free program.

(h) All of AmerUs Life's policyowner obligations remain in force and are not affected by the Plan of Conversion.

Section III. Definitions

For purposes of this exemption:

(a) The term ''AMHC'' means American Mutual Holding Company, its successor, AmerUs Group, and any of their affiliates, as defined in paragraph (b) of this Section III.

(b) An ''affiliate'' of AMHC includes—

(1) Any person directly or indirectly through one or more intermediaries, controlling, controlled by, or under common control with AMHC. (For purposes of this paragraph, the term ''control'' means the power to exercise a controlling influence over the management or policies of a person other than an individual.)

(2) Any officer, director or partner in such person, and

(3) Any corporation or partnership of which such person is an officer, director or a 5 percent partner or owner.

(c) The term ''Eligible Member'' means a person who is (or, collectively, persons who are) the owner(s) of one or more ''eligible policies'' (the Eligible Policy or Eligible Policies) on the adoption date of the Plan of Conversion. An ''Eligible Policy'' is defined as a policy that has been in force for at least

[1] Because the Plan is a voluntary employees' beneficiary association trust, it is not qualified under section 401 of the Code. Therefore, there is no jurisdiction under Title II of the Act pursuant to section 4975 of the Code. However, the Department is assuming, for purposes of this final exemption, that there is jurisdiction under Title I of the Act pursuant to section 3(1) of the Act.

[2] For purposes of this exemption, all references to AMHC are deemed to include references to AmerUs Group Co. (AmerUs Group), the successor in interest to AMHC.

one year prior to the adoption date and that remains in force on the effective date of the Plan of Conversion. A mutual member of AMHC who owns both an Eligible Policy and a policy that is not an Eligible Policy will be an Eligible Member only with respect to the Eligible Policy.

(d) The term ''Policy Credit'' means either an increase in the accumulation account value (to which no surrender or similar charge will be applied) or an increase in a dividend accumulation on a policy or contract issued by AmerUs Life.

EFFECTIVE DATE: This exemption is effective as of September 20, 2000.

For a more complete statement of the facts and representations supporting the Department's decision to grant this exemption, refer to the notice of proposed exemption that was published on August 17, 2000 at 65 FR 50240.

Written Comments

The Department received nine written comments with respect to the proposed exemption. Eight comments were submitted by Plan policyowners. The ninth comment, which was submitted by AmerUs Group, the successor to AMHC, and also referred to herein as ''the Applicant,'' is intended to update and clarify the proposal in certain areas.

Of the policyowner comments received, four commenters expressed their approval of the exemption. Three commenters made general comments. Of the comments falling into this category, one comment was not germane to the exemption request, while the two others focused on either the commenter's retirement eligibility or the form of demutualization consideration to be received. (Both of these comments were subsequently forwarded to the Applicant for handling by appropriate personnel.) Finally, another commenter objected to the granting of the exemption because he believed the exemption would favor officers and owners of AMHC at the expense of the investors.

Following is a discussion of the comment submitted by the objecting policyowner as well as the Applicant's response to this comment. Also discussed is the Applicant's comment and the Department's responses to the specific areas of the Applicant's concern.

Opposing Policyowner's Comment

As discussed briefly above, the commenter is of the view that the Restructuring will not benefit investors but will entirely benefit the officers and the owners of AMHC. Therefore, the commenter asserts that he is opposed to the granting of the exemption.

In response to this comment, the Applicant explains that the Restructuring provides significant benefits to the policyowners of AmerUS Life, which are the ''investors'' in and ''owners'' of AMHC for periods prior to the Restructuring, and does not serve to benefit AMHC's officers. The Applicant notes that the Restructuring provides AmerUS Life policyowners with Common Stock, Cash or Policy Credits in exchange for such policyowners' illiquid membership interests in AMHC. Thus, according to the Applicant, policyowners may effectively convert the economic value of their membership interests into a marketable equity position, cash or an enhanced return on their AmerUs Life insurance products. The Applicant states that this realization of economic value occurs while the underlying insurance or annuity contacts remain in force, without compromising any benefits, guarantees or other rights and interests (apart from membership in AMHC) under the existing policies and contracts. Additionally, the Applicant points out that policyowners receiving Common Stock as consideration for their membership interests are expected to benefit, along with other AMHC shareholders, from the increased financial flexibility that the organization of AMHC as a stock company (rather than a mutual company) will realize. For these reasons, the Applicant believes that the view expressed by the commenter should not prevent the Department from granting the final exemption.

Applicant's Comments

1. *Status of the Restructuring and Renaming of AMHC.* The Applicant states that the Plan of Conversion was approved by the Commissioner on August 1, 2000 and that the restructuring (the Restructuring) of AMHC occurred on September 20, 2000. Specifically, on that date, the Applicant explains that AmerUs Group liquidated into AMHC and AMHC converted to a stock corporation. In addition, the Applicant states that AmerUs Life Holdings, Inc. merged into AMHC, with AMHC as the surviving corporation. Further, the Applicant points out that AmerUs Life (*i.e.*, AmerUs Life Insurance Company) became a wholly owned subsidiary of AMHC and AMHC was renamed ''AmerUs Group Co.''

Because of the foregoing changes, the Applicant requests that the final exemption reflect that: (a) The Plan of Conversion was approved by the Commissioner on August 1, 2000; (b) the Restructuring occurred on September 20, 2000; and (c) the Applicant's name was changed from AMHC to ''AmerUs Group Co.''

The Department has noted these modifications to the proposed exemption. With respect to the Applicant's name change, the Department has added a new footnote to the operative language of the exemption to clarify that, for purposes of this exemption, all references to AMHC are deemed to include references to AmerUs Group, the successor in interest to AMHC. The Department believes that by incorporating references to AmerUs Group into the definition of the term ''AMHC,'' the continuity of the proposed and final exemptions will be preserved and reader confusion will be minimized. In addition, the Department has made a corresponding change to Section III(a) of the final exemption in order that it will read as follows:

For purposes of this exemption:

(a) The term ''AMHC'' means American Mutual Holding Company, its successor, AmerUs Group, and any of their affiliates, as defined in paragraph (b) of this Section III.

2. *Effective Date of Exemption and Use of the Escrow Arrangement.* When the exemption application was initially filed, the Applicant explains that the timing and sequence of events for the Restructuring and the final exemption were uncertain. For this reason, the Applicant notes that the exemption application indicated that ''[i]n the event that a final exemption ha[d] not been granted by the Department as of the effective date of the Restructuring, consideration otherwise payable to the Plans [would] be held in an interest-bearing escrow account, at the expense of AMHC, pending the grant of the final exemption.'' The Applicant also noted that a subsequent submission to the Department stated more definitely that an escrow arrangement would be established.

However, because the publication of the proposed exemption was so close to the effective date of the Restructuring, the Applicant states that the use of the escrow arrangement became potentially burdensome. If an escrow arrangement were utilized, the Applicant explains that it would have been in place for a brief period of time and all of the fixed costs of such an arrangement would be have been borne by the Applicant.

In lieu of establishing an escrow account, the Applicant represents that it decided to distribute the demutualization consideration between October 18–24, 2000, which occurrence would be prior to the granting of the final exemption. Therefore, the

Applicant requests that the final exemption be made retroactive to September 20, 2000, the date of the Restructuring. Additionally, the Applicant requests that the final exemption not be conditioned on AMHC's use of an escrow arrangement.

In response to this comment, the Department has made the final exemption effective as of September 20, 2000. This text appears in Section I of the final exemption, in the operative language, as well as in the section captioned **EFFECTIVE DATE**.

The Department notes that while the failure to describe the escrow arrangement in the Summary of Facts and Representations (the Summary) may have been due to an oversight, the Applicant counsel subsequently informed the staff, in telephone communication, of the time and monetary problems that would result if such an arrangement were ever adopted. Therefore, the Applicant requested that the exemption be made retroactive to the date of the Restructuring. The Department has complied with this request and it has not conditioned the final exemption on AMHC's use of the escrow arrangement.

3. *Identification of Insurance Company.* In the operative language, Section I of the proposed exemption refers to ''a policyowner of AMHC.'' Similarly, Representation 18(g) of the Summary refers to ''AMHC's policyholder obligations.'' As indicated in the exemption application, the Applicant states that AMHC was a mutual holding company in which the policyowners of AmerUs Life held mutual membership interests. However, the Applicant believes that the present wording of the proposed exemption could result in some confusion as to the actual policyowners covered by the exemption because there were no policyowners of AMHC. Therefore, the Applicant requests that Section I of the final exemption replace the phrase ''a policyowner of AMHC'' with the phrase ''a policyowner of AmerUs Life'' and that Representation 18(g) of the Summary refer to ''policyholder obligations of AmerUs Life'' rather than ''AMHC's policyholder obligations.''

In response to this comment, the Department has modified the operative language of Section I of the final exemption to reflect this change. In addition, the Department has deleted the reference to ''AMHC's policyholder obligations'' in section I(h) of the proposed exemption and has substituted the phrase ''AmerUs Life's policyowner obligations.'' Further, the Department notes the modification to Representation 18(g) of the Summary.

4. *Approval of Plan of Conversion by Voting Members.* The fourth full paragraph of Representation 9 of the Summary states that ''Section 508B.6 of the Iowa Code requires that the plan of conversion be approved by two-thirds of the policyholders [3] of the mutual company who are entitled to vote on the conversion.'' The Applicant represents that Iowa law does not require two-thirds approval by the members who are eligible to vote. Rather, it requires two-thirds approval by the members who do vote. The Applicant notes that this matter was misstated in the exemption application.

Therefore, to correct this error, the Applicant requests that the sentence be revised to read as follows: ''Section 508B.6 of the Iowa Code requires that the plan of conversion be approved by two-thirds of the policyowners of the mutual company voting on the conversion.''

In response, the Department notes this revision to the Summary.

5. *Scope of Determination.* Section II(b) of the proposed exemption and Representation 18(b) of the Summary condition the exemption on the Commissioner determining that the Plan of Conversion ''is fair and equitable to Eligible Members and is not detrimental to the general public.'' The Applicant states that although Iowa law requires the Commissioner to determine that the Plan of Conversion is ''fair and equitable'' to policyowners, it does not require that the Commissioner make a determination regarding the effect on the general public.

The Applicant explains that under Section 508B.7 of the Iowa Code, the full legal standard for the Commissioner's approval of the Plan of Conversion is a determination that ''the plan complies with all provisions of law, the plan is fair and equitable to the mutual company and its policyholders, and that the reorganized company will have the amount of capital and surplus deemed by the commissioner to be reasonably necessary for its future solvency.'' Therefore, the Applicant requests that Section II(b) of the final exemption and Representation 18(b) of the Summary be amended to conform with the Iowa Code.

In response to this comment, the Department has revised Section II(b) of the final exemption to read as follows:

(b) The Commissioner reviews the terms and options that are provided to Eligible Members of AMHC as part of such Commissioner's review of the Plan of Conversion and the Commissioner approves the Plan of Conversion following a determination that such Plan is fair and equitable to Eligible Members.

In addition, the Department notes the modification to Representation 18(b) of the Summary.

6. *Filing of Indianapolis Life Plan of Conversion with the Commissioner.* In Representation 10 of the Summary, Footnote 36 of the proposed exemption states that ''[i]t is anticipated that a plan of conversion for the demutualization of ILICo will be filed with the Indiana Insurance Commissioner in August 2000.'' The Applicant wishes to clarify that this filing was actually made in September 2000. Accordingly, the Department notes this clarification.

For further information regarding the comments and other matters discussed herein, interested persons are encouraged to obtain copies of the exemption application file (Exemption Application No. D–10874) the Department is maintaining in this case. The complete application file, as well as all supplemental submissions received by the Department, are made available for public inspection in the Public Documents Room of the Pension and Welfare Benefits Administration, Room N–5638, U.S. Department of Labor, 200 Constitution Avenue, N.W., Washington, D.C. 20210.

Accordingly, after giving full consideration to the entire record, including the written comments, the Department has decided to grant the exemption subject to the modifications and clarifications described above.

FOR FURTHER INFORMATION CONTACT: Ms. Jan D. Broady of the Department, telephone (202) 219–8881. (This is not a toll-free number.)

Richard E. Lobenherz Profit Sharing Plan (the Plan) Located in Charlevoix, Michigan

[Prohibited Transaction Exemption 2000–54; Exemption Application No. D–10895]

Exemption

The sanctions resulting from the application of section 4975 of the Code, by reason of section 4975(c)(1)(A) through (E) of the Code, shall not apply to the proposed sale of certain unimproved real property (the Land) by the Plan to Richard E. Lobenherz (Mr. Lobenherz), a disqualified person with respect to the Plan,[4] provided that the following conditions are satisfied:

[3] AMHC's Plan of Conversion refers to ''Owners'' of ''Policies'' issued by AmerUs Life or ''policyowners'' while the Iowa Code refers to ''policyholders.'' For purposes of this exemption, the Department notes that both terms have the same meaning.

[4] Because Mr. Lobenherz is the sole owner of the Plan sponsor and the only participant in the Plan, there is no jurisdiction under Title I of the

(a) The proposed sale will be a one-time transaction for cash;

(b) The Plan will receive the current fair market value for the Land established at the time of the sale by a qualified, independent appraiser;

(c) The Plan will pay no real estate expenses or commissions associated with the sale; and

(d) The sale will provide the Plan with greater liquidity and further diversification of the Plan's assets.

For a more complete statement of the facts and representations supporting the Department's decision to grant this exemption, refer to the notice of proposed exemption published on September 22, 2000 at 65 FR 57396.

FOR FURTHER INFORMATION CONTACT: Ekaterina A. Uzlyan of the Department at (202) 219–8883. (This is not a toll-free number).

General Information

The attention of interested persons is directed to the following:

(1) The fact that a transaction is the subject of an exemption under section 408(a) of the Act and/or section 4975(c)(2) of the Code does not relieve a fiduciary or other party in interest or disqualified person from certain other provisions to which the exemptions does not apply and the general fiduciary responsibility provisions of section 404 of the Act, which among other things require a fiduciary to discharge his duties respecting the plan solely in the interest of the participants and beneficiaries of the plan and in a prudent fashion in accordance with section 404(a)(1)(B) of the Act; nor does it affect the requirement of section 401(a) of the Code that the plan must operate for the exclusive benefit of the employees of the employer maintaining the plan and their beneficiaries;

(2) These exemptions are supplemental to and not in derogation of, any other provisions of the Act and/or the Code, including statutory or administrative exemptions and transactional rules. Furthermore, the fact that a transaction is subject to an administrative or statutory exemption is not dispositive of whether the transaction is in fact a prohibited transaction; and

(3) The availability of these exemptions is subject to the express condition that the material facts and representations contained in each application accurately describes all material terms of the transaction which is the subject of the exemption.

Employee Retirement Income Security Act of 1974 (the Act) pursuant to 29 CFR 2510.3–3(b). However, there is jurisdiction under Title II of the Act pursuant to section 4975 of the Code.

Signed at Washington, DC, this 25th day of October, 2000.

Ivan Strasfeld,

Director of Exemption Determinations, Pension and Welfare Benefits Administration, Department of Labor.

[FR Doc. 00–27916 Filed 10–31–00; 8:45 am]

BILLING CODE 4510–29–M

LIBRARY OF CONGRESS

Copyright Office

[Docket No. 2000–2 CARP CD 93–97]

Distribution of 1993, 1994, 1995, 1996 and 1997 Cable Royalty Funds

AGENCY: Copyright Office, Library of Congress.

ACTION: Announcement of the schedule for the proceeding.

SUMMARY: The Copyright Office of the Library of Congress is announcing the schedule for the 180-day arbitration period for the Phase II distribution of the 1997 cable royalty funds for the syndicated programming category.

EFFECTIVE DATE: November 1, 2000.

ADDRESSES: All hearings and meetings for the Phase II cable distribution proceeding shall take place in the James Madison Memorial Building, Room LM–414, First and Independence Avenue, SE., Washington, DC 20540.

FOR FURTHER INFORMATION CONTACT: David O. Carson, General Counsel, or William J. Roberts, Jr., Senior Attorney for Compulsory Licenses, P.O. Box 70977, Southwest Station, Washington, D.C. 20024. Telephone: (202) 707–8380. Telefax: (202) 252–3423.

SUPPLEMENTARY INFORMATION: Section 251.11(b) of the regulations governing the Copyright Arbitration Royalty Panels (''CARPs''), 37 CFR subchapter B, provides that:

> At the beginning of each proceeding, the CARP shall develop the original schedule of the proceeding which shall be published in the **Federal Register** at least seven calendar days in advance of the first meeting. Such announcement shall state the times, dates, and place of the meetings, the testimony to be heard, whether any of the meetings, or any portion of a meeting, is to be closed, and if so, which ones, and the name and telephone number of the person to contact for further information.

This notice fulfills the requirements of § 251.11(b) for the proceeding to determine the Phase II distribution of the 1997 cable royalty funds for the syndicated programming category.

By Order dated January 12, 2000, the Library consolidated all Phase II controversies in Docket Nos. 96–7 CARP CD 93–94, 97–2 CARP CD 95, 98–2 CARP CD 96 and 99–5 CARP CD 97 into a single distribution proceeding and announced the precontroversy discovery schedule for a Phase II distribution proceeding in the syndicated programming category. All controversies in this category have reached settlement, except for a dispute between certain claimants represented by the Independent Producers Group (''IPG''), and certain claimants represented by the Motion Picture Association of America, Inc. (''Program Suppliers''), for distribution of the 1997 royalty funds collected under the cable statutory license of the Copyright Act. 17 U.S.C. 111.

On October 12, 2000, the Office published a notice initiating the 180-day arbitration period for this proceeding. 65 FR 60690 (October 12, 2000). On October 17, 2000, the parties to this proceeding met with the arbitrators for the purposes of discussing resolution of certain issues designated to the CARP by the Copyright Office during the discovery period of the proceeding and of setting a schedule for this proceeding. At that meeting, the parties and the arbitrators agreed to the following briefing and hearing schedule:

Document production (if ordered)—October 27, 2000
Filing of Opposition to IPG motion to remove designation of ''highly confidential'' and related relief—November 2, 2000
Filing of Follow-up discovery requests related to October 27 document production—November 3, 2000
Filing of Response to follow-up discovery requests—November 8, 2000
Filing of Reply to Opposition to IPG motion to remove designation of ''highly confidential'' and related relief—November 9, 2000
Filing of Motions to dismiss and/or to strike—November 20, 2000
Filing of Oppositions to Motions to dismiss and/or strike—December 1, 2000
Filing of Reply to Opposition to Motions to dismiss and/or strike—December 8, 2000
Oral arguments on all motions regarding document production, discovery, protective orders, and all motions to dismiss and/or strike—December 11–12, 2000
Opening Statements for both parties—January 8, 2001
Presentation of Direct Cases:—January 8–12, 2001
Witness for Program Suppliers: Marsha E. Kessler
Witness for Independent Producers Group: Raul Galaz
Filing of Written Rebuttal Testimony—January 26, 2001
Filing of Post-hearing discovery requests—January 31, 2001
Filing of Responses to post-hearing discovery requests—February 2, 2001
Completion of document production—February 5, 2001

Oral Arguments on all motions regarding post-hearing document production and discovery—February 6–7, 2001
Presentation of Rebuttal Cases—February 20–21, 2001
Filing of Proposed Findings of Fact and Conclusions of Law—March 2, 2001
Filing of Replies to Proposed Findings of Fact and Conclusions of Law—March 9, 2001
Closing Arguments—March 16, 2001
Close of 180-day period—April 16, 2001
All hearings will begin at 9:30 a.m. and end at 4:30 p.m.

At this time, the parties have not moved to close any portion of the proceeding to the public. Further refinements to the schedule will be announced in open meetings and issued as orders to the parties participating in the proceeding. All changes will be noted in the docket file of the proceeding, as required by the Copyright Office regulations governing the administration of CARP proceedings. 37 CFR 251.11(c)

Dated: October 27, 2000.

David O. Carson,

General Counsel.

[FR Doc. 00–28039 Filed 10–31–00; 8:45 am]

BILLING CODE 1410–33–P

NATIONAL AERONAUTICS AND SPACE ADMINISTRATION

NASA Advisory Council, Aero-Space Technology Advisory Committee, Aviation Safety Reporting System Subcommittee; Meeting

[Notice 00–131]

AGENCY: National Aeronautics and Space Administration.

ACTION: Notice of meeting.

SUMMARY: In accordance with the Federal Advisory Committee Act, Public Law 92–463, as amended, the National Aeronautics and Space Administration announces a NASA Advisory Council, Aero-Space Technology Advisory Committee, Aviation Safety Reporting System Subcommittee meeting.

DATES: Monday, November 13, 2000, 9 a.m. to 5 p.m.; and Tuesday, November 14, 2000, 9 a.m. to 5 p.m.

ADDRESSES: Doubletree Hotel, Two Portola Plaza, Monterey, CA 93940.

FOR FURTHER INFORMATION CONTACT: Ms. Linda Connell, National Aeronautics and Space Administration, Ames Research Center, Moffett Field, CA 94035, 650/960–6059.

SUPPLEMENTARY INFORMATION: The meeting will be open to the public up to the seating capacity of the room. Agenda topics for the meeting are as follows:

—Report on Aviation Safety Reporting System

—Report on Aviation Performance Measuring System Program

It is imperative that the meeting be held on these dates to accommodate the scheduling priorities of the key participants. Visitors will be requested to sign a visitors register.

Dated: October 26, 2000.

Beth M. McCormick,

Advisory Committee Management Officer, National Aeronautics and Space Administration.

[FR Doc. 00–28001 Filed 10–31–00; 8:45 am]

BILLING CODE 7510–01–P

NATIONAL AERONAUTICS AND SPACE ADMINISTRATION

[Notice 00–132]

Notice of Prospective Patent License

AGENCY: National Aeronautics and Space Administration.

ACTION: Notice of prospective patent license.

SUMMARY: NASA hereby gives notice that Tektronix, Inc., of Beaverton, OR has applied for an exclusive license to practice the inventions disclosed in U.S. Patent Nos. 5,629,780 and 5,426,512 both entitled ''Image Data Compression Having Minimum Perceptual Error'' which are assigned to the United States of America as represented by the Administrator of the National Aeronautics and Space Administration. Written objections to the prospective grant of a license should be sent to NASA Ames Research Center.

DATES: Responses to this notice must be received by January 2, 2001.

FOR FURTHER INFORMATION CONTACT: Robert Padilla, Patent Counsel, NASA Ames Research Center, Mail Stop 202A–3, Moffett Field, CA 94035–1000, telephone (650) 604–5104.

Dated: October 26, 2000.

Edward A. Frankle,

General Counsel.

[FR Doc. 00–28002 Filed 10–31–00; 8:45 am]

BILLING CODE 7510–01–P

NUCLEAR REGULATORY COMMISSION

[Docket No. 50–440–CivP, ASLBP No. 01–784–01–CivP]

First Energy Operating Co., Perry Nuclear Power Plant; Establishment of Atomic Safety and Licensing Board

Pursuant to delegation by the Commission dated December 29, 1972, published in the **Federal Register**, 37 FR 28,710 (1972), and §§ 2.105, 2.700, 2.702, 2.714, 2.714a, 2.717, 2.721, and 2.772(j) of the Commission's Regulations, all as amended, an Atomic Safety and Licensing Board is being established to preside over the following proceeding. First Energy Operating Company, Perry Nuclear Power Plant, Order Imposing Civil Monetary Penalty.

This Board is being established pursuant to the request of First Energy Operating Company, the licensee for the Perry Nuclear Power Plant, for a hearing regarding an Order issued by the Director, Office of Enforcement, dated August 14, 2000, entitled ''Order Imposing Civil Monetary Penalty'' (65 FR 49,610 (Aug. 14, 2000)).

The Board is comprised of the following administrative judges:

Charles Bechhoefer, Chairman, Atomic Safety and Licensing Board Panel, U.S. Nuclear Regulatory Commission, Washington, DC 20555–0001
Ann Marshall Young, Atomic Safety and Licensing Board Panel, U.S. Nuclear Regulatory Commission, Washington, DC 20555–0001
Dr. Richard F. Cole, Atomic Safety and Licensing Board Panel, U.S. Nuclear Regulatory Commission, Washington, DC 20555–0001

All correspondence, documents and other materials shall be filed with the Judges in accordance with 10 CFR 2.701.

Issued at Rockville, MD, this 27th day of October 2000.

G. Paul Bollwerk III,

Chief Administrative Judge, Atomic Safety and Licensing Board Panel.

[FR Doc. 00–28051 Filed 10–31–00; 8:45 am]

BILLING CODE 7590–01–P

NUCLEAR REGULATORY COMMISSION

Application for a License To Import Radioactive Waste

Pursuant to 10 CFR 110.72(j) ''Public notice of receipt of an application'', please be advised that the Nuclear Regulatory Commission has received an application to amend import license IW008 as set forth below. Copies of the

amendment application are available electronically through ADAMS and can be accessed through the Public Electronic Reading Room (PERR) link <*http://www.nrc.gov/NRC/ADAMS/index.html*> at the NRC Homepage.

A request for a hearing or petition for leave to intervene should be filed within 30 days after publication of this notice in the **Federal Register**, if possible. Any request for hearing or petition for leave to intervene shall be served by the requestor or petitioner upon the applicant, the Office of the General Counsel, U.S. Nuclear Regulatory Commission, Washington DC 20555; the Secretary, U.S. Nuclear Regulatory Commission, Washington, DC 20555; and the Executive Secretary, U.S. Department of State, Washington, DC 20520.

The information concerning the amendment application follows.

NRC IMPORT LICENSE AMENDMENT APPLICATION

Name of applicant; Date of application; Date received; Application No.	Description of material			Country of origin
	Material type	Total qty	End use	
Starmet CMI; September 28, 2000; October 4, 2000; IW008/01.	Depleted uranium swart/turnings; DU solid cylindrical pieces and.	Increase from 80,000 kgs to 250,000 kgs DU.	DU will be recycled	United Kingdom.
	Contaminated mineral oil ..	Increase from 45,000 liters to 240,000 liters mineral oil.	Oil will be processed and reused.	United Kingdom.

Dated this 25th day of October 2000 at Rockville, Maryland.

For the Nuclear Regulatory Commission,

Ronald D. Hauber,

Deputy Director, Office of International Programs.

[FR Doc. 00–28033 Filed 10–31–00; 8:45 am]

BILLING CODE 7590–01–P

NUCLEAR REGULATORY COMMISSION

[Docket No. 50–271]

Vermont Yankee Nuclear Power Corporation; Correction

The October 18, 2000, **Federal Register** contained a ''Notice of Consideration of Issuance of Amendment to Facility Operating License, Proposed No Significant Hazards Consideration Determination, and Opportunity for a Hearing,'' (65 FR 62393) for the Vermont Yankee Nuclear Power Station. This notice offered an opportunity for comment or hearing requests.

Inadvertently, this was the second offering of such opportunity as a notice had already been published in the September 27, 2000, **Federal Register** (65 FR 68111). The 30-day comment/hearing request deadline is October 27, 2000, at 4:15 p.m. as stated in the September 27, 2000, **Federal Register**.

Dated at Rockville, Maryland this 26th day of October 2000.

For the Nuclear Regulatory Commission.

Richard P. Croteau, Sr.,

Project Manager, Section 2, Project Directorate I, Division of Licensing Project Management, Office of Nuclear Reactor Regulation.

[FR Doc. 00–28034 Filed 10–31–00; 8:45 am]

BILLING CODE 7590–01–M

NUCLEAR REGULATORY COMMISSION

Biweekly Notice; Applications and Amendments to Facility Operating Licenses Involving No Significant Hazards Considerations

I. Background

Pursuant to Public Law 97–415, the U.S. Nuclear Regulatory Commission (the Commission or NRC staff) is publishing this regular biweekly notice. Public Law 97–415 revised section 189 of the Atomic Energy Act of 1954, as amended (the Act), to require the Commission to publish notice of any amendments issued, or proposed to be issued, under a new provision of section 189 of the Act. This provision grants the Commission the authority to issue and make immediately effective any amendment to an operating license upon a determination by the Commission that such amendment involves no significant hazards consideration, notwithstanding the pendency before the Commission of a request for a hearing from any person.

This biweekly notice includes all notices of amendments issued, or proposed to be issued from October 9, 2000, through October 20, 2000. The last biweekly notice was published on October 18, 2000.

Notice of Consideration of Issuance of Amendments to Facility Operating Licenses, Proposed no Significant Hazards Consideration Determination, and Opportunity for a Hearing

The Commission has made a proposed determination that the following amendment requests involve no significant hazards consideration. Under the Commission's regulations in 10 CFR 50.92, this means that operation of the facility in accordance with the proposed amendment would not (1) involve a significant increase in the probability or consequences of an accident previously evaluated; or (2) create the possibility of a new or different kind of accident from any accident previously evaluated; or (3) involve a significant reduction in a margin of safety. The basis for this proposed determination for each amendment request is shown below.

The Commission is seeking public comments on this proposed determination. Any comments received within 30 days after the date of publication of this notice will be considered in making any final determination.

Normally, the Commission will not issue the amendment until the expiration of the 30-day notice period. However, should circumstances change during the notice period such that failure to act in a timely way would result, for example, in derating or shutdown of the facility, the Commission may issue the license amendment before the expiration of the 30-day notice period, provided that its final determination is that the amendment involves no significant hazards consideration. The final determination will consider all public and State comments received before action is taken. Should the Commission take this action, it will publish in the **Federal Register** a notice of issuance and provide for opportunity for a hearing after issuance. The Commission expects that the need to take this action will occur very infrequently.

Written comments may be submitted by mail to the Chief, Rules Review and Directives Branch, Division of Administration Services, Office of Administration, U.S. Nuclear Regulatory

Commission, Washington, DC 20555–0001, and should cite the publication date and page number of this **Federal Register** notice. Written comments may also be delivered to Room 6D22, Two White Flint North, 11545 Rockville Pike, Rockville, Maryland from 7:30 a.m. to 4:15 p.m. Federal workdays. Copies of written comments received may be examined at the NRC's Public Document Room, the Gelman Building, 2120 L Street, NW., Washington, DC through September 22, 2000. The NRC has relocated its Public Document Room to the NRC's headquarters building. Effective September 26, 2000, documents may be examined at the NRC's Public Document Room, located at One White Flint North, 11555 Rockville Pike (first floor), Rockville, Maryland 20852. The filing of requests for a hearing and petitions for leave to intervene is discussed below.

By December 1, 2000, the licensee may file a request for a hearing with respect to issuance of the amendment to the subject facility operating license and any person whose interest may be affected by this proceeding and who wishes to participate as a party in the proceeding must file a written request for a hearing and a petition for leave to intervene. Requests for a hearing and a petition for leave to intervene shall be filed in accordance with the Commission's ''Rules of Practice for Domestic Licensing Proceedings'' in 10 CFR Part 2. Interested persons should consult a current copy of 10 CFR 2.714 which is available at the Commission's Public Document Room, located at One White Flint North, 11555 Rockville Pike (first floor), Rockville, Maryland 20852. Publicly available records will be accessible and electronically from the ADAMS Public Library component on the NRC Web site, *http://www.nrc.gov* (the Electronic Reading Room). If a request for a hearing or petition for leave to intervene is filed by the above date, the Commission or an Atomic Safety and Licensing Board, designated by the Commission or by the Chairman of the Atomic Safety and Licensing Board Panel, will rule on the request and/or petition; and the Secretary or the designated Atomic Safety and Licensing Board will issue a notice of a hearing or an appropriate order.

As required by 10 CFR 2.714, a petition for leave to intervene shall set forth with particularity the interest of the petitioner in the proceeding, and how that interest may be affected by the results of the proceeding. The petition should specifically explain the reasons why intervention should be permitted with particular reference to the following factors: (1) The nature of the petitioner's right under the Act to be made a party to the proceeding; (2) the nature and extent of the petitioner's property, financial, or other interest in the proceeding; and (3) the possible effect of any order which may be entered in the proceeding on the petitioner's interest. The petition should also identify the specific aspect(s) of the subject matter of the proceeding as to which petitioner wishes to intervene. Any person who has filed a petition for leave to intervene or who has been admitted as a party may amend the petition without requesting leave of the Board up to 15 days prior to the first prehearing conference scheduled in the proceeding, but such an amended petition must satisfy the specificity requirements described above.

Not later than 15 days prior to the first prehearing conference scheduled in the proceeding, a petitioner shall file a supplement to the petition to intervene which must include a list of the contentions which are sought to be litigated in the matter. Each contention must consist of a specific statement of the issue of law or fact to be raised or controverted. In addition, the petitioner shall provide a brief explanation of the bases of the contention and a concise statement of the alleged facts or expert opinion which support the contention and on which the petitioner intends to rely in proving the contention at the hearing. The petitioner must also provide references to those specific sources and documents of which the petitioner is aware and on which the petitioner intends to rely to establish those facts or expert opinion. Petitioner must provide sufficient information to show that a genuine dispute exists with the applicant on a material issue of law or fact. Contentions shall be limited to matters within the scope of the amendment under consideration. The contention must be one which, if proven, would entitle the petitioner to relief. A petitioner who fails to file such a supplement which satisfies these requirements with respect to at least one contention will not be permitted to participate as a party.

Those permitted to intervene become parties to the proceeding, subject to any limitations in the order granting leave to intervene, and have the opportunity to participate fully in the conduct of the hearing, including the opportunity to present evidence and cross-examine witnesses.

If a hearing is requested, the Commission will make a final determination on the issue of no significant hazards consideration. The final determination will serve to decide when the hearing is held.

If the final determination is that the amendment request involves no significant hazards consideration, the Commission may issue the amendment and make it immediately effective, notwithstanding the request for a hearing. Any hearing held would take place after issuance of the amendment.

If the final determination is that the amendment request involves a significant hazards consideration, any hearing held would take place before the issuance of any amendment.

A request for a hearing or a petition for leave to intervene must be filed with the Secretary of the Commission, U.S. Nuclear Regulatory Commission, Washington, DC 20555–0001, Attention: Docketing and Services Branch, or may be delivered to the Commission's Public Document Room, the Gelman Building, 2120 L Street, NW., Washington, DC by the above date. A copy of the petition should also be sent to the Office of the General Counsel, U.S. Nuclear Regulatory Commission, Washington, DC 20555–0001, and to the attorney for the licensee.

Nontimely filings of petitions for leave to intervene, amended petitions, supplemental petitions and/or requests for a hearing will not be entertained absent a determination by the Commission, the presiding officer or the Atomic Safety and Licensing Board that the petition and/or request should be granted based upon a balancing of factors specified in 10 CFR 2.714(a)(1)(i)–(v) and 2.714(d).

For further details with respect to this action, see the application for amendment which is available for public inspection at the Commission's Public Document Room, located at One White Flint North, 11555 Rockville Pike (first floor), Rockville, Maryland 20852. Publicly available records will be accessible and electronically from the ADAMS Public Library component on the NRC Web site, *http://www.nrc.gov* (the Electronic Reading Room).

Carolina Power & Light Company, et al., Docket No. 50–400, Shearon Harris Nuclear Power Nuclear Power Plant, Unit 1, Wake and Chatham Counties, North Carolina

Date of amendment request: October 4, 2000.

Description of amendment request: The proposed amendment would revise the Technical Specifications (TS) to support the replacement of the current Westinghouse Model D4 steam generators (SGs) with Westinghouse Model Delta 75 replacement steam generators (RSGs), which is planned to occur during the fall 2001 refueling outage. The proposed changes to the TS

are required in part as a result of the physical differences between the currently installed Model D4 SGs and the Model Delta 75 RSGs. The Model Delta 75 RSGs have thermally treated alloy 690 tube material, which has been proven through laboratory testing and operational experience to provide increased corrosion resistance compared to the Inconel 600 tube material in the Model D4 SGs. The licensee has completed a comprehensive engineering review program in support of the SG replacement. This program evaluated the difference between the current Model D4 SGs and the Model Delta 75 RSGs in conjunction with restoration of the original nominal reactor coolant average temperature (Tavg) of 588.8°F. The supporting analyses and evaluations were performed to support operations with the RSGs at the current licensed core power of 2775 MWt and also, where possible, at an uprated core power level of 2900 MWt. This license amendment application, however, does not include a request for a power uprate.

Basis for proposed no significant hazards consideration determination: As required by 10 CFR 50.91(a), the licensee has provided its analysis of the issue of no significant hazards consideration, which is presented below:

1. The proposed change does not involve a significant increase in the probability or consequences of an accident previously evaluated.

The proposed change does not affect accident initiators. The change in RCS [reactor coolant system] volume, an input in certain accident analyses, is acceptable since applicable acceptance criteria continue to be met. The change to the calculated residual heat removal (RHR) cooldown time does not adversely impact safe shutdown and meets Standard Review Plan (SRP) requirements. The analysis results for peak accident pressure (P_a remain below the containment design pressure limit. Revised Technical Specification limits, such as SG minimum water levels, have been analytically determined based on the new SG design features to preserve analysis assumptions. Since the proposed change has no effect on accident initiators, the probability of design basis events is not impacted by these analyses.

The leak rate assumed in accident analyses is conservative and independent of the value of P_a. Since the peak calculated accident pressure remains below the design value, the containment function as a barrier to the release of radioactive material is not adversely affected. Dose consequences have been analyzed with respect to the proposed change and applicable acceptance criteria continue to be met.

HNP [Harris Nuclear Plant] structures, systems and components, as well as the RSGs, are designed to operate at the original T_{avg} value of 588.8°F. The comprehensive engineering review performed to support SG replacement includes evaluation and analysis results for transients and design basis accidents that meet applicable acceptance criteria. The proposed DNB [departure from nucleate boiling] parameter values ensure the core and reactor coolant system do not exceed their safety limits. The trip setpoints initiate safeguards actions that mitigate postulated accident consequences. Since plant systems will function as designed and performance requirements are verified to be acceptable with the proposed changes, there are no impacts to accident initiators or precursors. Therefore, these changes do not involve a significant increase in the probability of an accident previously evaluated.

The RSGs are designed to minimize potential for the types of tube degradation experienced with the OSGs [original steam generators]. The changes to reactor core safety limits, RTS/ESFAS [reactor trip system/engineered safety feature actuation system] values and T_{avg} limit support transient and accident analysis assumptions relating to fuel clad failure. Since SG tube and fuel clad integrity will continue to be adequately maintained, these barriers to release of radioactive material will perform their required function. All dose consequences continue to meet acceptance criteria. As a result, the changes do not involve a significant increase in consequences of previously evaluated accidents.

The proposed change reduces Technical Specification limits on reactor coolant activity to ensure that the dose consequences of the proposed new SGTR [steam generator tube rupture] analysis meet guidelines. The Technical Specification limits are not accident initiators and the proposed change provides additional conservatism in the limiting initial condition for RCS activity level. The change in these limits functions only to mitigate consequences of RCS liquid and steam release events and does not impact methods for plant operation. Since there are no adverse impacts to initiators of accidents previously evaluated, there is no significant increase in the probability of such accidents.

The proposed change to the basis for thyroid dose conversion factors is an accepted update to that used in the analysis of record. Dose consequences for all analyses, including SGTR, remain within allowable guidelines. Although there are increases to previously reported dose consequences, the increase is not significant since the results remain under the SRP acceptance criteria.

Reducing the required time at hot standby to maintain adequate CST [condensate storage tank] minimum volume ensures accident mitigation capability and is not involved with accident initiation. Conservative reactor trip setpoints during power operation with inoperable main steam line safety valves ensure accident analysis assumptions for maximum secondary system pressure. The proposed setpoint changes are also unrelated to initiation of previously evaluated accidents.

The removal of F* plugging criteria is consistent with NUREG–0452, ''Standard Technical Specifications.'' The remaining Technical Specification plugging criterion is based on a minimum wall thickness due to wastage as determined by ASME [American Society of Mechanical Engineers] Section XI. The proposed change is conservative because operation with F* degraded tubes is eliminated.

The potential for a tube rupture is expected to be acceptably low based on the qualification analysis and testing for the RSGs. The proposed program for periodic in-service inspection monitors the integrity of the SG tubing to provide reasonable assurance that there is sufficient time to take proper and timely corrective action if any tube degradation is detected. The deleted OSG tube inspection requirements are not applicable to the RSG due to design differences.

SG tube inspections are not accident initiators and the function of the inspection program is to identify and eliminate, when appropriate, accident precursor conditions. Because of this, the probability of postulated accidents (*e.g.,* SG tube rupture) is not increased.

Since the proposed changes are either conservative (reduced RTS setpoints, elimination of F* tube plugging criteria) or related to mitigation of postulated accidents (hot standby time prior to cooldown), there is no significant increase in dose consequences.

Therefore, the proposed change does not involve a significant increase in the probability or consequences of an accident previously evaluated.

2. The proposed change does not create the possibility of a new or different kind of accident from any accident previously evaluated.

The proposed change does not adversely impact methods of plant operation and new methods of plant systems operation are not created. The impacts of SG replacement on NSSS [nuclear steam supply system] and other plant systems, including the change in RCS volume and other design differences, have been evaluated and design and performance requirements continue to be met. Accordingly, no new accident scenarios, failure mechanisms or limiting single failures are introduced.

Changing P_a to reflect the results of current analyses while maintaining its value below the containment design pressure will not introduce significant or adverse changes to the plant design basis that would create a new or different kind of accident.

Since HNP structures, systems and components are designed for operation at the proposed T_{avg}, returning to this value following SG replacement does not introduce a new method of plant operation. The proposed reactor core safety limits, RTS/ESFAS and T_{avg} limit changes do not introduce new failure mechanisms or limiting single failures since the values have been shown to preserve transient and accident analysis assumptions. The acceptable evaluation results demonstrate that the changes do not adversely affect or challenge the performance or integrity of safety related systems. Hence, no new accident scenarios are created.

The proposed change to specific activity limits does not modify plant systems,

structures, or components or impact methods of plant operation. The SGTR analysis that provides the basis for the change demonstrates adequate margin to overfill based on revised emergency operating procedures [EOPs]. Operator actions and response times have been demonstrated to be acceptable and to satisfy analysis assumptions in simulator exercises. The operator actions do not represent different types of actions from those currently included in the EOPs, and are not subject to errors that would create new failure mechanisms.

No new types of failures and no new or different accident initiators are created. As a result, the change will not introduce significant or adverse changes to the plant design basis that could lead to the creation of a new or different kind of accident.

The revised thermal power restrictions imposed by [the] Technical Specification[s] when there are inoperable main steam line safety valves are conservative and consistent with the Technical Specification Bases methodology. The reduction in hot standby time to six hours continues to satisfy requirements for safe shutdown. No new failure mechanisms or limiting single failures are introduced and there are no adverse effects or challenges to the performance or integrity of safety related systems.

Removing application of F* repair criteria and sleeving methodologies from [the] Technical Specification[s] with the RSGs does not introduce significant or adverse changes to the plant design basis that could lead to a new or different kind of accident being created. These requirements were needed to address design and material conditions of the original HNP SGs that are not applicable to the RSGs. This change does not alter the objective of SG surveillance activities—maintaining the structural integrity of this portion of the reactor coolant system. The surveillance activities are performed during outages and the proposed surveillance program is consistent with regulatory guidance. No new failures are created.

Therefore, the proposed change does not create the possibility of a new or different kind of accident from any previously evaluated.

3. The proposed change does not involve a significant reduction in a margin of safety.

Analyses supporting the change reflect the RSG design, including changes to primary and secondary volume and minimum water level for adequate heat sink. Mass and energy and containment response analyses model ESF [engineered safety features] systems and safety analysis limits. The analysis results demonstrate that applicable acceptance criteria, including DNB, RCS pressure, peak cladding temperature, containment pressure and temperature, and dose, continue to be met.

The calculated containment peak accident pressures result in a value of P_a that remains below the containment design pressure. The margin of safety during design basis events is preserved if P_a does not exceed the design pressure. In addition, performance of the containment leakage rate testing program ensures the validity of the assumptions used in the accident analyses.

All evaluations and analyses performed to support SG replacement reflect the proposed values. The results demonstrate that applicable acceptance criteria (including DNB, RCS pressure and temperature, LOCA [loss-of-coolant accident] peak clad temperature, containment pressure and temperature, and dose) continue to be met. Calculations confirm that the proposed RTS/ESFAS values provide margin to the safety analysis limits, thereby ensuring that the margin of safety inherent in the safety analysis limit itself is preserved.

The specific activity limit has no effect on safety limits or limiting safety system settings. The only impact of the specific activity limits is on dose consequences for certain design basis accidents such as SGTR. The proposed change is in the conservative direction for dose. The SGTR analysis is the most limiting of these accident dose evaluations. The proposed new analysis demonstrates that the SGTR consequences remain within allowable SRP guideline limits, which establish the margin of safety. Since the analysis results remain below the SRP guidelines, the margin of safety is not reduced.

The thermal power restrictions imposed by [the] Technical Specification[s] when there are inoperable main steam line safety valves [ensure] sufficient relieving capacity during all postulated transients, thereby maintaining margin of safety for secondary system pressure.

The proposed in-service inspection program for the RSGs monitors the integrity of the SG tubing and is consistent with NUREG–0452. Since the F* repair criteria and sleeving methods specifically addressed OSG degradation issues, their removal does not involve a reduction in a margin of safety. Analyses demonstrate that the RSG tubing retains adequate structural and leakage integrity using the proposed plugging criteria during normal, transient, and postulated accident conditions. The RSG tubing design and proposed plugging criteria are consistent with applicable ASME requirements and do not allow for operation with indications identified by F* criteria.

The proposed plugging limit maintains the margin of safety by providing for leakage detection and shutdown in the event of an unexpected tube leak while minimizing the potential for excessive leakage or tube burst in the event of [an] MSLB [main steam line break] or LOCA.

Therefore, the proposed change does not involve a significant reduction in a margin of safety.

The NRC staff has reviewed the licensee's analysis and, based on this review, it appears that the three standards of 10 CFR 50.92(c) are satisfied. Therefore, the NRC staff proposes to determine that the amendment request involves no significant hazards consideration.

Attorney for licensee: William D. Johnson, Vice President and Corporate Secretary, Carolina Power & Light Company, Post Office Box 1551, Raleigh, North Carolina 27602.

NRC Section Chief: Richard P. Correia.

Detroit Edison Company, Docket No. 50–341, Fermi 2, Monroe County, Michigan

Date of amendment request: September 20, 2000.

Description of amendment request: The proposed amendment would change Technical Specification (TS) 5.5.7.d to decrease the maximum allowed pressure drops across control room emergency filtration (CREF) make-up and recirculation train filters and charcoal adsorbers. Specifically, the pressure drops would be changed from ''6.0 inches WG [water gauge]'' to ''3.0 inches WG'' for the CREF makeup train, and from ''8.0 inches WG'' to ''4.2 inches WG'' for the CREF recirculation train. Additionally, the words ''(CREF only)'' would be removed to clarify that standby gas treatment system (SGTS) prefilter is included in the Ventilation Filter Testing Program (VFTP).

Basis for proposed no significant hazards consideration determination: As required by 10 CFR 50.91(a), the licensee has provided its analysis of the issue of no significant hazards consideration, which is presented below:

1. The proposed change does not involve a significant increase in the probability or consequences of an accident previously evaluated.

The proposed changes revise the pressure drop acceptance criteria of TS Section 5.5.7.d from ''6.0 inches WG'' to ''3.0 inches WG'' for the CREF makeup train, and from ''8.0 inches WG'' to ''4.2 inches WG'' for the CREF recirculation train. The change in pressure drop reflects the impact of reduced fan speed on system characteristics. The removal of ''(CREF only)'' is editorial and clarifies the inclusion of the SGTS prefilters in the VFTP. These changes assure that the Surveillance procedure appropriately demonstrate[s] the ability of the CREF trains to perform its specified function.

No changes in either system design or operating strategies will be made as a result of these changes. Thus, no opportunity exists to increase the probability or consequences of a previously analyzed accident. Therefore, the proposed change does not involve a significant increase in the probability or consequences of a previously evaluated accident.

2. The proposed change does not create the possibility of a new or different kind of accident from any accident previously evaluated.

The proposed change does not involve a change to the plant operation. As a result, the proposed change does not affect any of the parameters or conditions that could contribute to the initiation of any accidents. This change involves the pressure drop across the filters and adsorbers of the CREF make-up and recirculation trains. The

surveillance requirements for performing the actual test have not changed. The VFTP tests are performed such that the pressure drop across the combined HEPA [high efficiency particulate adsorber] filters, the prefilters, and the charcoal adsorbers is less than the value specified in the acceptance criteria in accordance with Regulatory Guide 1.52, Revision 2, and ANSI/ASME N510–1980 at the system flowrate of plus or minus 10 percent. The change involves restrictive changes in test acceptance criteria and test methodology and no change in system operation.

No new accident scenarios are created by the lower value of filter and adsorber pressure drop. No safety-related equipment or safety functions are altered as a result of this change. Additionally, the removal of ''(CREF only)'' is editorial and clarifies the inclusion of the SGTS prefilters in the VFTP. Therefore, the changes do not create the possibility of a new or different kind of accident or malfunction from those previously analyzed.

3. The change does not involve a significant reduction in the margin of safety.

The proposed change in combination with existing restrictions within the TS provides assurance that there are no credible mechanisms to prevent the CCHVAC [control center heating, ventilation, and air conditioning] system from performing its specified function. The maximum allowable differential pressure is more restrictive and corresponds to the reduced fan speed across the HEPA filters, prefilters, and charcoal adsorbers as a result of this change. There will be no changes in system operating strategies because of the inclusion of the make-up moisture separator/prefilter and test acceptance criteria for the CREF trains. Additionally, the removal of ''(CREF only)'' is editorial and clarifies the inclusion of the SGTS prefilters in the VFTP. Therefore, the proposed change does not involve a significant reduction in the margin of safety.

The NRC staff has reviewed the licensee's analysis and, based on this review, it appears that the three standards of 10 CFR 50.92(c) are satisfied. Therefore, the NRC staff proposes to determine that the amendment request involves no significant hazards consideration.

Attorney for licensee: Peter Marquardt, Legal Department, 688 WCB, Detroit Edison Company, 2000 2nd Avenue, Detroit, Michigan 48226–1279.

NRC Section Chief: Claudia M. Craig.

Duke Energy Corporation, Docket Nos. 50–369 and 50–370, McGuire Nuclear Station, Units 1 and 2, Mecklenburg County, North Carolina

Date of amendment request: June 13, 2000.

Description of amendment request: The proposed amendments would make administrative changes to the McGuire Nuclear Station, Units 1 and 2, Facility Operating Licenses (FOLs). Specifically, they would: (1) Delete existing License Conditions which have been met by completed licensee's actions or are imposed by other regulatory requirements, or (2) make other miscellaneous changes to the McGuire Nuclear Station, Units 1 and 2, FOLs.

Basis for proposed no significant hazards consideration determination: As required by 10 CFR 50.91(a), the licensee has provided its analysis of the issue of no significant hazards consideration, which is presented below:

1. Will the change involve a significant increase in the probability or consequence of an accident previously evaluated?

No. The proposed amendment to the FOLs are either administrative, eliminate duplication of other regulatory requirements or delete License Conditions fully met by Duke Energy Corporation. No actual plant equipment, operating practices, or accident analyses are affected by this proposed amendment. Therefore, the proposed amendment has no impact on the possibility of any type of accident: new, different, or previously evaluated.

2. Will the change create the possibility of a new or different kind of accident from any previously evaluated?

No. The proposed amendment to the FOLs [are] either administrative, eliminate duplication of other regulatory requirements or delete License Conditions fully met by Duke Energy Corporation. No actual plant equipment, operating practices, or accident analyses are affected by this proposed amendment and no failure modes not bounded by previously evaluated accidents are created. Therefore, the proposed amendment has no impact on the possibility of any type of accident: new, different, or previously evaluated.

3. Will the change involve a significant reduction in a margin of safety?

No. Margin of safety is associated with confidence in the ability of the fission product barriers (*i.e.,* fuel and fuel cladding, reactor coolant system pressure boundary, and containment structure) to limit the level of radiation dose to the public. The proposed amendment to the FOLs are either administrative, eliminate duplication of other regulatory requirements or delete License Conditions fully met by Duke Energy Corporation. Therefore, no reduction in any existing margin of safety is involved.

The NRC staff has reviewed the licensee's analysis and, based on this review, it appears that the three standards of 10 CFR 50.92(c) are satisfied. Therefore, the NRC staff proposes to determine that the amendment request involves no significant hazards consideration.

Attorney for licensee: Ms. Lisa F. Vaughn, Duke Energy Corporation, 422 South Church Street, Charlotte, North Carolina 28201–1006.

NRC Section Chief: Richard L. Emch, Jr.

Duke Energy Corporation, Docket Nos. 50–369 and 50–370, McGuire Nuclear Station, Units 1 and 2, Mecklenburg County, North Carolina

Date of amendment request: August 22, 2000.

Description of amendment request: The proposed amendments would revise the Technical Specifications and associated Bases to limit the amount of time a Refueling Water Storage Tank level channel can be in a trip condition.

Basis for proposed no significant hazards consideration determination: As required by 10 CFR 50.91(a), the licensee has provided its analysis of the issue of no significant hazards consideration, which is presented below:

1. Does the change involve a significant increase in the probability of consequences of an accident previously evaluated?

No. The proposed change modifies the allowed outage time that a channel of the Refueling Water Storage Tank (RWST) can be in the tripped condition from an indefinite period of time to a more conservative maximum of 48 hours. The Engineered Safety Features Actuation System (ESFAS) is an accident mitigating system, and not an accident initiator. Therefore, the proposed change will have no impact on any accident probabilities. Accident consequences will not be affected, as no changes are being made to the plant involving a reduction in reliability or effectiveness of the Emergency Core Cooling System (ECCS). Consequently, any previous evaluations associated with accidents will not be affected by this change.

2. Does the change create the possibility of a new or different kind of accident from any accident previously evaluated?

No. The proposed change does not modify the design or configuration of the plant. The proposed change provides a more conservative time limit for a channel to be in the tripped condition. No physical changes are being made to plant systems, structures or components nor will the proposed change reduce the ability of any of the safety related equipment required for accident mitigation. Consequently, this change does not create the possibility of a new or different kind of accident from any previously evaluated.

3. Does this change involve a significant reduction in a margin of safety?

No. Margin of safety is related to the confidence in the ability of the fission product barriers to perform their design functions during and following accident conditions. These barriers include the fuel cladding, the reactor coolant system, and the containment system. The proposed change provides a more restrictive time limit for a channel of the RWST to be in a tripped condition than is currently allowed by the ITS. The performance of the fission product barriers will not be degraded by the proposed changes. Consequently, plant safety analyses will not be affected.

The NRC staff has reviewed the licensee's analysis and, based on this review, it appears that the three

standards of 10 CFR 50.92(c) are satisfied. Therefore, the NRC staff proposes to determine that the amendment request involves no significant hazards consideration.

Attorney for licensee: Ms. Lisa F. Vaughn, Duke Energy Corporation, 422 South Church Street, Charlotte, North Carolina 28201–1006.

NRC Section Chief: Richard L. Emch, Jr.

Entergy Nuclear Generation Company, Docket No. 50–293, Pilgrim Nuclear Power Station, Plymouth County, Massachusetts

Date of amendment request: September 1, 2000.

Description of amendment request: The proposed amendment would make a change to Pilgrim Technical Specification Table 4.6–3. The proposed change substitutes ''21 (approx)'' under the column ''Effective Full Power Years (EFPY)'' for the current ''18 (approx).'' This proposed change would defer the second reactor vessel surveillance capsule pull to allow Pilgrim to pursue participation in the Boiling Water Reactor Integrated Surveillance Program Plan.

Basis for proposed no significant hazards consideration determination: As required by 10 CFR 50.91(a), the licensee has provided its analysis of the issue of no significant hazards consideration. The NRC staff has reviewed the licensee's analysis against the standards of 10 CFR 50.92(c). The NRC staff's analysis is presented below:

The proposed changes do not involve a significant increase in the probability or consequences of an accident previously evaluated.

Pressure-temperature (P/T) limits (Pilgrim Technical Specifications Figures 3.6.1, 3.6.2, and 3.6.3) are imposed on the reactor coolant system to ensure that adequate safety margins against nonductile or rapidly propagating failure exist during normal operation, anticipated operational occurrences, and system hydrostatic tests. The P/T limits are related to the nil-ductility reference temperature, RTndt, as described in American Society of Mechanical Engineers (ASME) Section III, Appendix G. Changes in the fracture toughness properties of reactor pressure vessel (RPV) beltline materials, resulting from the neutron irradiation and the thermal environment, are monitored by a surveillance program in compliance with the requirements of 10 CFR Part 50, Appendix H. The effect of neutron fluence on the shift in the nil-ductility reference temperature of pressure vessel steel is predicted by methods given in Regulatory Guide (RG) 1.99, Revision 2.

The proposed change is a revision of the second surveillance capsule withdrawal time, identified in Technical Specification Table 4.6–3, from approximately 18 effective full power years (EFPY) to approximately 21 EFPY. This change will not affect P/T limits as given in Pilgrim Technical Specifications Figures 3.6.1, 3.6.2, and 3.6.3. This change is not related to any accidents previously evaluated. This change will not affect any plant safety limits or limiting conditions of operation. The proposed change will not affect reactor pressure vessel performance because no physical changes are involved and Pilgrim vessel P/T limits will remain in accordance with RG 1.99, Revision 2 requirements. The proposed change will not cause the reactor pressure vessel or interfacing systems to be operated outside of their design or testing limits. Also, the proposed change will not alter any assumptions previously made in evaluating the radiological consequences of accidents.

Therefore, the probability or consequences of accidents previously evaluated will not be increased by the proposed change.

The proposed changes do not create the possibility of a new or different kind of accident from any accident previously evaluated.

The proposed change revises the second RPV material surveillance capsule withdrawal time in Pilgrim Technical Specification Table 4.6–3 from approximately 18 EFPY to approximately 21 EFPY. This proposed change does not involve a modification of the design of plant structures, systems, or components (SSCs). The proposed change will not impact the manner in which the plant is operated as plant operating and testing procedures will not be affected by the change. The proposed change will not degrade the reliability of SSCs important to safety because equipment protection features will not be deleted or modified, equipment redundancy or independence will not be reduced, supporting system performance will not be downgraded, the frequency of operation of equipment important to safety will not be increased, and increased or more severe testing of equipment important to safety will not be imposed. No new accident types or failure modes will be introduced as a result of the proposed change. Therefore, the proposed change does not create the possibility of a new or different kind of accident from that previously evaluated.

The proposed changes do not involve a significant reduction in a margin of safety.

Operation in accordance with the existing P–T curves ensures reactor vessel and cooling system integrity. The capsule pull is a surveillance technique that provides data for modification of the curves. The margins will not change without new data from the capsule pull. The NRC-approved methods used to develop the temperatures associated with the current curves reside in Pilgrim's TSs and have been determined to be conservative. The proposed change will not affect any safety limits, limiting safety system settings, or limiting conditions of operation. The proposed change does not represent a change in initial conditions, or in a system response time, or in any other parameter affecting the course of an accident analysis supporting the Bases of any Technical Specification. Therefore, the proposed changes do not involve a significant reduction in any margins of safety.

Based on the staff's analysis, it appears that the three standards of 50.92(c) are satisfied. Therefore, the NRC staff proposes to determine that the amendment request involves no significant hazards consideration.

Attorney for licensee: J. M. Fulton, Esquire, Assistant General Counsel, Pilgrim Nuclear Power Station, 600 Rocky Hill Road, Plymouth, Massachusetts 02360–5599

NRC Section Chief: James W. Clifford.

FirstEnergy Nuclear Operating Company, Docket No. 50–346, Davis-Besse Nuclear Power Station, Unit 1, Ottawa County, Ohio

Date of amendment request: August 7, 2000.

Description of amendment request: The proposed changes would revise Technical Specification (TS) Bases 3/4.3.1 and 3/4.3.2 to clarify the actions that must be performed when Steam and Feedwater Rupture Control System (SFRCS) components and SFRCS-actuated components are inoperable. Specifically, the proposed changes would provide guidance on which TS actions are applicable for SFRCS-actuated components. Also, the proposed changes would introduce new TS 3/4.7.1.8 which would provide appropriate requirements for the Main Feedwater Control Valves and the Startup Feedwater Control Valves. Additionally, the proposed changes would introduce new TS 3/4.7.1.9 which would provide requirements for the Turbine Stop Valves.

Basis for proposed no significant hazards consideration determination:

As required by 10 CFR 50.91(a), the licensees have provided their analysis of the issue of no significant hazards consideration, which is presented below:

The Davis-Besse Nuclear Power Station (DBNPS) has reviewed the proposed changes and determined that a significant hazards consideration does not exist because operation of the Davis-Besse Nuclear Power Station, Unit No. 1, in accordance with these changes would:

1a. Not involve a significant increase in the probability of an accident previously evaluated because no such accidents are affected by the proposed changes. The amendment application proposes to revise Technical Specification (TS) Bases 3/4.3.1 and 3/4.3.2, Reactor Protection System and Safety System Instrumentation, to clarify Steam and Feedwater Rupture Control System (SFRCS) requirements; to add new TS 3/4.7.1.8, Main Feedwater Control Valves (MFCVs) and Startup Feedwater Control Valves (SFCVs); to add new TS 3/4.7.1.9, Turbine Stop Valves (TSVs); and to make associated changes to the Bases and TS Index.

The proposed change would provide clear guidance for the actions required when SFRCS logic and SFRCS-actuated components are inoperable. The new TSs for MFCVs, SFCVs, and TSVs provide appropriate operational requirements for these SFRCS-actuated components. The proposed change will not change any system hardware or testing requirements. Initiating conditions and assumptions remain as previously analyzed for accidents in the DBNPS Updated Safety Analysis Report (USAR). The proposed changes to the TS Bases and Index are consistent with the changes described above.

The proposed changes are consistent with the intent of NUREG–1430, ''Standard Technical Specifications—Babcock and Wilcox Plants,'' Revision 1, April 1995. The proposed change does not involve a change to any plant hardware and does not affect the probability of any equipment malfunction or accident-initiating event.

1b. Not involve a significant increase in the consequences of an accident previously evaluated because the source term, containment isolation, or radiological releases are not affected by the proposed changes. The proposed changes ensure that excessive unavailability of SFRCS-actuated equipment which is used to mitigate accident consequences does not occur. The reliability of the plant hardware and the ability of the SFRCS-actuated equipment to perform its safety function are not affected. Existing system and component redundancy is not affected by the proposed changes. The existing system and component operation is not affected by the proposed changes, and the assumptions used in evaluating the radiological consequences in the DBNPS USAR are not invalidated. Therefore, for each postulated accident the consequences remain bounded by the consequences from the previously evaluated accidents.

2. Not create the possibility of a new or different kind of accident from any accident previously evaluated because these proposed changes do not involve any physical changes to systems or components, nor do they alter the manner in which the systems or components are operated.

3. Not involve a significant reduction in a margin of safety because, for the proposed changes, there are no new or significant changes to the initial conditions contributing to accident severity or consequences. Accordingly, there are no significant reductions in a margin of safety.

On the basis of the above, the DBNPS has determined that the License Amendment Request does not involve a significant hazards consideration. As this License Amendment Request concerns a proposed change to the Technical Specifications that must be reviewed by the Nuclear Regulatory Commission, this License Amendment Request does not constitute an unreviewed safety question.

The NRC staff has reviewed the licensee's analysis and, based on this review, it appears that the three standards of 10 CFR 50.92(c) are satisfied. Therefore, the NRC staff proposes to determine that the amendment request involves no significant hazards consideration.

Attorney for licensee: Mary E. O'Reilly, Attorney, FirstEnergy Corporation, 76 South Main Street, Akron, OH 44308.

NRC Section Chief: Anthony J. Mendiola.

IES Utilities Inc., Docket No. 50–331, Duane Arnold Energy Center, Linn County, Iowa

Date of amendment request: September 19, 2000.

Description of amendment request: The proposed amendment revises the Standby Liquid Control (SLC) boron solution requirements in TS Figure 3.1.7–1 to ensure a minimum boron concentration of 660 parts per million (ppm) in the reactor.

Basis for proposed no significant hazards consideration determination: As required by 10 CFR 50.91(a), the licensee has provided its analysis of the issue of no significant hazards consideration, which is presented below:

1. The proposed amendment will not involve a significant increase in the probability or consequences of an accident previously evaluated.

The current TS SRs ensure acceptable SLC boron solution volume and concentration values which produce a minimum boron concentration of 600 ppm in the reactor. This proposed amendment revises the boron solution requirements to ensure a minimum boron concentration of 660 ppm in the reactor. A minimum boron concentration of 660 ppm in the reactor is sufficient to initiate and maintain reactor subcriticality as the nuclear system cools. The DAEC is currently pursuing the use of GE–14 fuel, power uprate to 1912 MWth and extended cycle length. Increasing the minimum boron concentration to 660 ppm in the reactor will provide adequate shutdown margin for these future core designs. A General Electric analysis, using the approved methods described in Revision 14 of General Electric Standard Application for Reactor Fuel (GESTAR II), NEDE 24011–P–A, provides the basis for the increase in minimum boron concentration. This analysis assumes DAEC operation with an equilibrium core of GE–14 fuel, operating at 1912 MWth with 24 month cycles and bounds all planned future core designs.

The concentration requirement of the SLC boron solution will continue to comply with the requirements of 10 CFR 50.62(c)(4).

The proposed editorial change to the title of TS Figure 3.1.7–1 provides clarity only and does not alter performance of TS SR 3.1.7.1 and SR 3.1.7.5.

Therefore, this proposed amendment will not involve a significant increase in the probability or consequences of an accident previously evaluated.

2. The proposed amendment will not create the possibility of a new or different kind of accident from any accident previously evaluated.

Ensuring a minimum boron concentration of 660 ppm in the reactor will result in an increase in the acceptable minimum volume of boron solution in the SLC tank. The tank can accept the increased volume of boron solution. The tank low and high level alarms will be altered; these alarms alert the operator to take action in the event boron solution volume is decreasing or increasing, respectively. Increasing the volume in the SLC tank and increases to the low and high level alarm setpoints will have no effect on operator actions to maintain system operability. Revising the SLC boron solution requirements to ensure a minimum boron concentration of 660 ppm in the reactor cannot create a new or different kind of accident.

The proposed editorial change to the title of TS Figure 3.1.7–1 provides consistent wording between the Figure, TS SR 3.1.7.1 and the TS BASES to avoid potential inconsistencies when determining the tank volume acceptability.

Therefore this proposed amendment will not create the possibility of a new or different

kind of accident from any accident previously evaluated.

3. The proposed amendment will not involve a significant reduction in a margin of safety.

DAEC TS SRs ensure SLC boron solution volume and concentration values which produce a minimum boron concentration of 600 ppm in the reactor. This proposed amendment revises SLC boron solution requirements to ensure a minimum boron concentration of 660 ppm in the reactor. A boron concentration of 660 ppm in the reactor is sufficient to initiate and maintain reactor subcriticality as the nuclear system cools. The DAEC is currently pursuing the use of GE–14 fuel, power uprate to 1912 MWth and extended cycle length. A General Electric (GE) analysis, using the approved methods described in Revision 14 of General Electric Standard Application for Reactor Fuel (GESTAR II), NEDE 24011–P–A, provides the basis for the increase in minimum boron concentration. GE's analysis demonstrated that at a minimum boron concentration of 600 ppm in the reactor, the SLC shutdown margin was marginal with respect to the TS requirement for shutdown margin. At a minimum boron concentration of 660 ppm in the reactor, sufficient margin is maintained such that TS Section 3.1.1 will be met under all anticipated conditions. The GE analysis assumes DAEC operation with an equilibrium core of GE–14 fuel, operating at 1912 MWth with 24 month cycles and bounds all planned future core designs.

The concentration requirement of the SLC boron solution will continue to comply with the requirements of 10 CFR 50.62(c)(4).

The SLC system is designed to inject a quantity of boron that produces a minimum boron concentration of 600 ppm in the reactor. An additional 25% of that quantity of boron is also injected to compensate for imperfect mixing, leakage and volume in other small piping connected to the reactor. This margin will be maintained such that an additional 25% of the quantity of boron required to achieve a minimum boron concentration of 660 ppm in the reactor will also be injected. Therefore, this proposed amendment will not involve a significant reduction in a margin of safety.

The proposed editorial change to the title of TS Figure 3.1.7–1 provides consistent wording between the Figure, TS SR 3.1.7.1 and the TS BASES to avoid potential inconsistencies when determining tank volume acceptability.

The NRC staff has reviewed the licensee's analysis and, based on this review, it appears that the three standards of 10 CFR 50.92(c) are satisfied. Therefore, the NRC staff proposes to determine that the amendment request involves no significant hazards consideration.

Attorney for licensee: Al Gutterman, Morgan, Lewis & Bockius, 1800 M Street, NW., Washington, DC 20036–5869.

NRC Section Chief: Claudia M. Craig.

Niagara Mohawk Power Corporation, Docket No. 50–220, Nine Mile Point Nuclear Station Unit No. 1, Oswego County, New York

Date of amendment request: September 26, 2000.

Description of amendment request: The licensee proposed to amend the unit's Technical Specifications (TSs), Sections 3.3.0, 3.3.2 thru 3.3.5 and 3.3.7 to allow performance of reactor vessel hydrostatic or leakage tests, and scram time and excess flow check valve tests, when the reactor system temperature is above 215 degrees Fahrenheit and the reactor is not critical, without having to maintain primary containment integrity. These proposed changes are consistent with the guidelines of NUREG–1433, Revision 1, ''Standard Technical Specifications, General Electric Plants, BWR/4.'' Concurrently, the licensee proposed to amend TS Sections 3.4.0 thru 3.4.5 to require reactor building (secondary containment) integrity when the reactor system temperature is above 215 degrees Fahrenheit. This will ensure that, should accidents occur during the above tests, the reactor building will perform its function to contain radiological releases. The licensee also proposed to impose a dose-equivalent iodine level of 1.5 microcuries per gram (as opposed to 9.47 microcuries per gram allowed during plant operation) during the above conditions to limit radiological consequences of possible accidents to limits bound by the previously analyzed main steam line break accident.

Basis for proposed no significant hazards consideration determination: As required by 10 CFR 50.91(a), the licensee has provided its analysis of the issue of no significant hazards consideration. The NRC staff has reviewed the licensee's analysis against the standards of 10 CFR 50.92(c). The NRC staff's review is presented below:

The operation of the unit in accordance with the proposed amendment will not involve a significant increase in the probability or consequences of an accident previously evaluated.

The proposed TS changes will result in not requiring containment integrity, but requiring reactor building integrity (secondary containment) during performance of the specified tests. These are changes in configuration (no hardware design change is involved) to permit testing of various systems or components under different conditions. The changed conditions are not considered precursor of accidents. Accordingly, the probability of an accident previously evaluated is not increased.

Accidents could occur during a test. As part of the proposed TS change, the licensee proposed to limit the dose-equivalent iodine level to ensure that the consequences of possible accidents will continue to be bounded by a previously analyzed accident, the main steam line break accident. Thus, there will not be any increase in the consequences of an accident previously evaluated.

The operation of the unit in accordance with the proposed amendment will not create the possibility of a new or different kind of accident from any accident previously evaluated. No hardware design change is involved with the proposed TS changes. Other than the changes in the configuration of the containment, the reactor building, and the permissible dose-equivalent iodine level, there are no other procedural changes. Therefore, the proposed amendment will not create the possibility of a new or different kind of accident from any previously evaluated.

The operation of the unit in accordance with the proposed amendment will not involve a significant reduction in a margin of safety.

The proposed TS changes will not adversely affect the performance characteristics and intended functions of systems and components covered by the above-listed TS sections. The tests, not affected by the proposed amendment, will ensure the ability of the subject systems and components to perform their intended function. Therefore, the proposed changes do not involve a significant reduction in a margin of safety.

Based on this review, it appears that the three standards of 10 CFR 50.92(c) are satisfied. Therefore, the NRC staff proposes to determine that the amendment request involves no significant hazards consideration.

Attorney for licensee: Mark J. Wetterhahn, Esquire, Winston & Strawn, 1400 L Street, NW., Washington, DC 20005–3502.

NRC Section Chief: Marsha Gamberoni.

Northeast Nuclear Energy Company, et al., Docket No. 50–336, Millstone Nuclear Power Station, Unit No. 2, New London County, Connecticut

Date of amendment request: August 25, 2000.

Description of amendment request: Millstone Unit No. 1 (MP1) is being decommissioned. To support this activity, several modifications are

required to modify/eliminate MP1 systems that support the operation of structures, systems, and components that are shared or common to Millstone Unit No. 2 (MP2) and Millstone Unit No. 3 (MP3). One of the separation projects entails the replacement of the existing MP1 to MP2 4160-volt cross-tie with a new MP3 to MP2 4160-volt cross-tie. Northeast Nuclear Energy Company (NNECO) has proposed a one time extension to the allowed outage time (AOT) for Action a.2 of Technical Specification (TS) 3.8.1.1, ''Electrical Power Systems—A. C. Sources—Operating'' in order to complete this modification. The proposed change would extend the AOT from 72 hours to 14 days, provided the MP3 station blackout (SBO) diesel generator (DG) is available to supply MP2; otherwise the AOT would only be extended to 7 days.

Basis for proposed no significant hazards consideration determination: As required by 10 CFR 50.91(a), the licensee has provided its analysis of the issue of no significant hazards consideration, which is presented below:

1. Involve a significant increase in the probability or consequences of an accident previously evaluated.

The offsite circuits supply power to equipment required to support the safe shutdown and post-accident operations of MP2. The preferred off-site power supply is from the 345 kV [kilovolt] switchyard, through the reserve station service transformer (RSST). The alternate (delayed) source of offsite power is the 4.16 kV cross-tie from MP1 via bus 14H.

To ensure that the probability of a complete loss of offsite power is not significantly increased, the MP1 4.16 kV cross-tie will only be removed from service when the weather conditions and forecast are favorable. Additionally, during the time that the alternate offsite source is inoperable, actions will be taken to protect the operable offsite circuit (i.e., no work will be conducted that could challenge the operability of the offsite circuit).

Although the offsite circuits provide power to components that help mitigate the consequences of accidents previously evaluated, the extension in the AOT does not affect any of the assumptions used in the deterministic evaluations of these accidents. Thus, this change will not increase the consequences of any accident previously analyzed.

Based on the above, the proposed change does not involve a significant increase in the probability or consequences of an accident previously analyzed.

2. Create the possibility of a new or different kind of accident from any accident previously evaluated.

The proposed change is an extension to a TS AOT. It does not alter the physical design, configuration, or method of operation of the plant. Therefore, the proposed change will not create the possibility of a new or different kind of accident from any previously analyzed.

3. Involve a significant reduction in a margin of safety.

During the implementation of the modification to provide MP2 with a 4.16 kV cross-tie with MP3, NNECO will:

a. Appropriately consider the 7 day and 14 day weather forecasts prior to removing the MP2 4.16 kV cross-tie with MP1 from service to minimize the potential for loss of offsite power due to severe weather or salt spray.

b. Protect the equipment redundant to the systems removed from service or whose power supply is affected by the modification. This includes limiting work on the 345 kV lines, the switchyard, the RSST, the diesel generators, the service water system, the high pressure safety injection system, and the reactor building closed cooling water system. This restriction will ensure that MP2 will remain capable of mitigating any potential design basis accident during the implementation of the modification.

c. Within 7 days of entering Action a. of TS 3.8.1.1, establish the capability to supply MP2 with power from the MP3 SBO DG via operator actions within one hour of an event resulting in a loss of the remaining offsite source of power. The capability to utilize the MP3 SBO DG is a contingency measure (i.e., will be able to serve as a temporary diesel).

Additionally, NNECO has evaluated the dominant sequences affecting plant risk using probabilistic safety analysis techniques. The analysis determined that the Delta Core Damage Probability associated with the extended allowed outage time was small.

There will be no significant reduction in a margin of safety because the increased risk is acceptable, focus on maintaining the operability of the redundant equipment and systems will be increased, the probable weather conditions will be appropriately considered, and the capability to supply MP2 with power from the MP3 SBO DG via operator action will be established within 7 days of entering Action a. of TS 3.8.1.1. The capability to utilize the MP3 SBO DG is a contingency measure (i.e., will be able to serve as a temporary diesel).

The NRC staff has reviewed the licensee's analysis and, based on this review, it appears that the three standards of 10 CFR 50.92(c) are satisfied. Therefore, the NRC staff proposes to determine that the amendment request involves no significant hazards consideration.

Attorney for licensee: Lillian M. Cuoco, Esq., Senior Nuclear Counsel, Northeast Utilities Service Company, P.O. Box 270, Hartford, Connecticut.

NRC Section Chief: James W. Clifford.

Northeast Nuclear Energy Company, et al., Docket Nos. 50–336 and 50–423, Millstone Nuclear Power Station, Unit Nos. 2 and 3, New London County, Connecticut

Date of amendment request: August 25, 2000.

Description of amendment request: Millstone Unit No. 1 (MP1) is being decommissioned. To support this activity, several modifications are required to modify/eliminate MP1 systems that support the operation of structures, systems, and components that are shared or common to Millstone Unit No. 2 (MP2) and Millstone Unit No. 3 (MP3). One of the separation projects entails the replacement of the existing MP1 to MP2 4160-volt cross-tie with a new MP3 to MP2 4160-volt cross-tie. Northeast Nuclear Energy Company (licensee) has evaluated this proposed new cross-tie utilizing the criteria of 10 CFR 50.59. The modification involves four unreviewed safety questions (USQs). One USQ pertains to MP2 and three USQs pertain to MP3. The licensee is requesting approval of the USQs.

Basis for proposed no significant hazards consideration determination: As required by 10 CFR 50.91(a), the licensee has provided its analysis of the issue of no significant hazards consideration, which is presented below:

Basis for No Significant Hazards Consideration—Millstone Unit No. 2 Unreviewed Safety Question

1. Involve a significant increase in the probability or consequences of an accident previously evaluated.

The test that will be performed to verify the ability of the cross-tie to supply approximately 3 MVA of power from MP3 to MP2 will require parallel operation of the MP3 SBO [station blackout] DG [diesel generator] with the MP2 4160 Volt system. To ensure that the MP3 SBO DG and associated connection will be isolated immediately should any abnormal event or failure occur at MP2, a special Class 1E instantaneous overcurrent relaying scheme will be used. This will provide additional assurance that if a fault occurs in the MP3 SBO DG or the associated cross-tie cabling, it will be isolated immediately and should not affect operability of the MP2 safety related 4160 Volt system. In addition, if a

loss of normal power occurs at MP2 during the test, the undervoltage condition will be detected by the credited undervoltage scheme, and MP2 will respond as designed to the loss of power.

The performance of this test does not significantly alter the manner in which the plant is operated. There will be no adverse effect on plant operation or accident mitigation equipment. The response of the plant and the operators following a design basis event will not be significantly different. Therefore, the proposed activity does not involve a significant increase in the probability or consequences of an accident previously evaluated.

2. Create the possibility of a new or different kind of accident from any accident previously evaluated.

The installation of the Class 1E instantaneous overcurrent relay scheme to be used during performance of this test will provide additional assurance that the MP2 safety related/busses will remain operable during the test to parallel the MP3 SBO DG to the MP2 4160 Volt system. The failure of the temporary overcurrent protection scheme would have the same effect as failure of the existing overcurrent protection scheme. Therefore, the proposed activity does not create the possibility of a new or different kind of accident from any accident previously evaluated.

3. Involve a significant reduction in a margin of safety.

The installation of the Class 1E instantaneous overcurrent relay scheme to be used during performance of this test will provide additional assurance that the MP2 safety related busses will remain operable during the test to parallel the MP3 SBO DG to the MP2 4160 Volt system. This will provide additional assurance that if a fault occurs in the MP3 SBO DG or the associated cross-tie cabling, it will be isolated immediately and should not affect operability of the MP2 safety related 4160 Volt system. In addition, if a loss of normal power occurs at MP2 during the test, the undervoltage condition will be detected by the credited undervoltage scheme, and MP2 will respond as designed to the loss of power.

The proposed activity will have no adverse effect on plant operation or equipment important to safety. The plant response to the design basis accidents will not change and the accident mitigation equipment will continue to function as assumed in the design basis accident analysis. Therefore, the proposed activity does not involve a significant reduction in a margin of safety.

Basis for No Significant Hazards Consideration—Millstone Unit No. 3 Unreviewed Safety Questions

1. Involve a significant increase in the probability or consequences of an accident previously evaluated.

MP3 USQ 1

The MP3 to MP2 4160 Volt cross-tie will impose up to an additional 3 MVA load on MP3. As a result, the minimum acceptable switchyard voltage for MP3 will increase from 334 kV to 337 kV. The analysis performed to support the new design shows that, with a minimum voltage of 337 kV in the switchyard, MP3 will remain connected to offsite power. The minimum voltage protection assures that acceptable starting and running voltages are present for the safety systems that may be required to operate should a loss of coolant accident (limiting design basis event) occur at MP3 while MP2 is being supplied with the safe shutdown load of 3 MVA from either the MP3 RSST [reserve station service transformer] or the MP3 NSST [normal station service transformer]. Thus, the MP3 offsite connection will not be tripped when offsite power is available.

The extra loading imposed by the MP2 safe shutdown loads on the MP3 power supplies is within the MP3 capability to simultaneously supply the worst case MP3 normal and accident loads. The ability of MP3 to mitigate design basis accidents and events is not adversely affected by the new design.

This activity does not significantly alter the manner in which the plant is operated. There will be no adverse effect on plant operation or accident mitigation equipment. Also, the response of the plant and the operators following a design basis event will not be significantly different. Therefore, this activity does not involve a significant increase in the probability or consequences of an accident previously evaluated.

MP3 USQ2

The proposed design change will allow the MP3 RSST (or the MP3 NSST, if the MP3 RSST is unavailable) to provide the alternate offsite source for MP2 to meet GDC [General Gesign Criterion] 17 requirements. If the MP3 RSST is not available, MP2 will need to credit the MP3 NSST as the alternate offsite power supply for GDC 17 compliance. The connection for the MP3 NSST is between breakers 13T and 14T. This connection point only provides 1 breaker separation (13T) between the MP2 RSST and the MP3 NSST. If breaker 13T is closed, this arrangement does not provide adequate separation between the two offsite sources as required by GDC 17. Opening breaker 13T when MP3 is shutdown will provide the required separation for MP2, but it will reduce the reliability of the offsite supply for MP3. Therefore, opening the 13T breaker to allow MP2 to meet GDC 17 requirements increases the probability of a loss of offsite power at MP3 when shutdown.

A loss of offsite power at MP3 due to a fault in the offsite distribution network is a low probability event. When combined with the expected frequency of removing the MP3 RSST from service of once per MP3 refueling outage, the probability of a loss of offsite power at MP3 when shutdown as a result of breaker 13T being open is low. In addition, the MP3 shutdown risk program will evaluate the impact of removing the MP3 RSST from service, and plan accordingly. This will ensure the MP3 RSST will be removed from service when the shutdown risk is determined to be acceptably low. Also, at least one MP3 EDG will be available, as required by Technical Specifications, to supply power to necessary loads if offsite power is lost.

This activity does not significantly alter the manner in which the plant is operated. There will be no adverse effect on accident mitigation equipment.

Also, the response of the plant and the operators following a design basis event will not be significantly different. Therefore, this activity does not involve a significant increase in the probability or consequences of an accident previously evaluated.

MP3 USQ 3

The connection of an additional 3 MVA load for MP2 onto the MP3 electrical distribution system will increase the short circuit fault levels on the MP3 electrical distribution system. If worst case conditions are established, the additional contribution from the MP2 loads would increase the fault level to above the switchgear ratings. The worst case short circuit conditions occur with MP3 at full power, the switchyard at its maximum voltage, an MP3 EDG paralleled to the bus for surveillance testing, and the MP3 to MP2 cross-tie supplying 3 MVA of power to MP2.

Although the fault levels could exceed the MP3 switchgear and circuit breaker ratings, it is not expected that the worst case conditions will be frequently established. For the majority of scenarios, this situation can be avoided because the new design allows the 3 MVA of power for MP2 to be supplied by either MP3 bus 34A or 34B. Procedural guidance will be provided to select the MP3 bus (34A or 34B) to supply power to MP2 that powers the opposite train from the train associated with the MP3 EDG to be tested. Even if the worst case plant configuration cannot be avoided, there is a low probability of event occurrence given the low probability of a bus fault coincident with the short time that the MP3 EDG would be paralleled to the system. In addition, the event would only affect one MP3 train of safety related equipment. The other train will be available to function as assumed to mitigate any accidents that may occur.

The use of the MP3 to MP2 cross-tie does not significantly alter the manner in which the plant is operated. Considering the low likelihood of a fault occurring concurrently with worst case conditions, and that only one MP3 train of safety related equipment should be affected, sufficient accident mitigation equipment will be available to mitigate a design basis accident. In addition, the response of the plant and the operators following a design basis event will not be significantly different. Therefore, this activity does not involve a significant increase in the probability or consequences of an accident previously evaluated.

2. Create the possibility of a new or different kind of accident from any accident previously evaluated.

MP3 USQ 1

The ability to supply 3 MVA of power from MP3 to MP2 will reduce the margin between the minimum switchyard voltage and the minimum acceptable switchyard voltage. However, the extra loading imposed by the MP2 safe shutdown loads on the MP3 power supplies is within the MP3 capability to simultaneously supply the worst case MP3 normal and accident loads. As a result, the response of the plant and the operators following an accident will not be

significantly different. There will be no adverse effect on accident mitigation equipment and no new failure modes will be introduced. Therefore, the activity will not create the possibility of a new or different kind of accident from any previously evaluated.

MP3 USQ 2

Maintaining breaker 13T and its associated disconnect switches open to ensure separation and independence of the two MP2 offsite sources is a change to the normal configuration of MP3. The new configuration involves the opening of a breaker. It does not involve any other physical changes to the plant or the operating methodology. This activity does reduce the diversity of offsite power supplies for the MP3 NSST, which increases the potential for a loss of offsite power at MP3. However, the plant response to a loss of offsite power because breaker 13T is open will not be significantly different from any previously analyzed loss of offsite power. Therefore, opening breaker 13T and its associated disconnect switches will not create the possibility of a new or different kind of accident from any previously evaluated.

MP3 USQ 3

The connection of an additional 3 MVA load for MP2 onto the MP3 electrical distribution system will increase the short circuit fault levels on the MP3 electrical distribution system. In the worst case, the short circuit fault could lead to a loss of one MP3 train of safety related equipment. However, the safety related equipment in the other train would remain capable of mitigating the event. The loss of a train of safety-related equipment is an analyzed event. Therefore, this activity will not introduce the possibility of a new or different kind of accident than any previously evaluated.

3. Involve a significant reduction in a margin of safety.

MP3 USQ 1

The MP3 to MP2 4160 Volt cross-tie will impose up to an additional 3 MVA load on MP3. As a result, the minimum acceptable switchyard voltage for MP3 will increase from 334 kV to 337 kV. The margin between the minimum switchyard voltage (345 kV) and the minimum acceptable switchyard voltage will decrease from 11 kV to 8 kV. This is an improvement for MP2. However, it is a reduction in the operating margin for MP3.

The analysis performed to support the new design shows that, with a minimum voltage of 337 kV in the switchyard, MP3 will remain connected to offsite power. The minimum voltage protection assures that acceptable starting and running voltages are present for the safety systems that may be required to operate should a loss of coolant accident (limiting design basis event) occur at MP3 while MP2 is being supplied with the safe shutdown load of 3 MVA from either the MP3 RSST or the MP3 NSST. Thus, the MP3 offsite connection will not be tripped when offsite power is available.

The extra loading imposed by the MP2 safe shutdown loads on the MP3 power supplies is within the MP3 capability to simultaneously supply the worst case MP3 normal and accident loads. As a result, the response of the plant and the operators following an accident will not be significantly different. There will be no adverse effect on plant operation or equipment important to safety. The plant response to the design basis accidents will not change and the accident mitigation equipment will continue to function as assumed in the design basis accident analysis. Therefore, this activity does not involve a significant reduction in a margin of safety.

MP3 USQ 2

The proposed design change will allow the MP3 RSST (or the MP3 NSST, if the MP3 RSST is unavailable) to provide the alternate offsite source for MP2 to meet GDC 17 requirements. If the MP3 RSST is not available, MP2 will need to credit the MP3 NSST as the alternate offsite power supply for GDC 17 compliance. This will require the 13T breaker to be open to meet GDC 17 requirements. As a result, the probability of a loss of offsite power at MP3 will increase.

A loss of offsite power at MP3 due to a fault in the offsite distribution network is a low probability event. When combined with the expected frequency of removing the MP3 RSST from service of once per MP3 refueling outage, the probability of a loss of offsite power at MP3 when shut down as a result of breaker 13T being open is low. In addition, the MP3 shutdown risk program will evaluate the impact of removing the MP3 RSST from service, and plan accordingly. This will ensure the MP3 RSST will be removed from service when the shutdown risk is determined to be acceptably low. Also, at least one MP3 EDG will be available, as required by Technical Specifications, to supply power to necessary loads if offsite power is lost.

The plant response to the design basis accidents will not change with breaker 13T open, and the accident mitigation equipment will continue to function as assumed in the design basis accident analysis. Therefore, this activity does not involve a significant reduction in a margin of safety.

MP3 USQ 3

The connection of an additional 3 MVA load for MP2 onto the MP3 electrical distribution system will increase the short circuit fault levels on the MP3 electrical distribution system. If worst case conditions are established, the additional contribution from the MP2 loads would increase the fault level to above the switchgear ratings. The worst case short circuit conditions occur with MP3 at full power, the switchyard at its maximum voltage, an MP3 EDG paralleled to the bus for surveillance testing, and the MP3 to MP2 cross-tie supplying 3 MVA of power to MP2.

Although the fault levels could exceed the MP3 switchgear and circuit breaker ratings, it is not expected that the worst case conditions will be frequently established. For the majority of scenarios, this situation can be avoided because the new design allows the 3 MVA of power for MP2 to be supplied by either MP3 bus 34A or 34B. Procedural guidance will be provided to select the MP3 bus (34A or 34B) to supply power to MP2 that powers the opposite train from the train associated with the MP3 EDG to be tested. Even if the worst case plant configuration cannot be avoided, there is a low probability of event occurrence given the low probability of a bus fault coincident with the short time that the MP3 EDG would be paralleled to the system. In addition, the event would only affect one MP3 train of safety related equipment. The other train will be available to function as assumed to mitigate any accidents that may occur.

The response of the plant and the operators following a design basis event will not be significantly different when using the MP3 to MP2 4160 Volt cross-tie. The accident mitigation equipment will continue to function as assumed in the design basis accident analysis. Therefore, this activity does not involve a significant reduction in a margin of safety.

The NRC staff has reviewed the licensee's analysis and, based on this review, it appears that the three standards of 10 CFR 50.92(c) are satisfied. Therefore, the NRC staff proposes to determine that the amendment request involves no significant hazards consideration.

Attorney for licensee: Lillian M. Cuoco, Esq., Senior Nuclear Counsel, Northeast Utilities Service Company, P.O. Box 270, Hartford, Connecticut

NRC Section Chief: James W. Clifford.

Nuclear Management Company, LLC, Docket No. 50–305, Kewaunee Nuclear Power Plant, Kewaunee County, Wisconsin

Date of amendment request: November 18, 1999, as supplemented August 7, 2000.

Description of amendment request: The proposed amendment to the Kewaunee Nuclear Power Plant Technical Specifications requests approval to increase the allowable number of spent fuel assemblies stored in the spent fuel pools.

Basis for proposed no significant hazards consideration determination: As required by 10 CFR 50.91(a), the licensee has provided its analysis of the issue of no significant hazards consideration, which is presented below:

1. Involve a significant increase in the probability or consequences of an accident previously evaluated. In the analysis of the safety issues concerning the expanded pool canal storage capacity, the following previously postulated accident scenarios have been considered:

a. A spent fuel assembly drop in the Spent Fuel Pool
b. Loss of Spent Fuel Pool cooling flow
c. A seismic event

The probability that any of the accidents in the above list can occur is not significantly

increased by the modification. The probabilities of a seismic event or loss of SFP cooling flow are not influenced by the proposed changes. The probability of an accidental fuel assembly drop is primarily influenced by the methods used to lift and move the fuel. The method of handling fuel during the loading of the canal racks will be the same as current fuel handling methods, since the same equipment (*i.e.*, Spent Fuel Handling Crane) and the same procedural guidance will be used. Since the methods used to move fuel during normal operations remain nearly the same as those used previously, there is no significant increase in the probability of an accident.

Accordingly, the proposed modification does not involve a significant increase in the probability of an accident previously evaluated.

The consequences of the previously postulated scenarios for an accidental drop of a fuel assembly in the SFP have been re-evaluated for the proposed change and were determined to be bounded by the existing analysis. The results show that the postulated accident of a fuel assembly striking the top of the storage racks will not distort the racks sufficiently to impair their functionality. The resulting structural damage to a falling assembly and/or a stored assembly has been determined to remain unchanged. The minimum subcriticality margin, K_{eff} less than or equal to 0.95, will be maintained. The structural damage to the SFP structure, pool liner, and fuel assembly resulting from a fuel assembly drop striking the pool floor or another assembly located within the racks remains unchanged. The resulting structural damage to these items subsequent to this event is not influenced by the proposed changes.

The consequences of a loss of SFP cooling have been evaluated and found to have no increase. The concern with this accident is a reduction of SFP water inventory from bulk pool boiling resulting in uncovering fuel assemblies. This situation would lead to fuel failure and subsequent significant increase in offsite dose. Loss of SFP cooling at Kewaunee is mitigated by ensuring that a sufficient time period exists between the loss of forced cooling and uncovering fuel. This period of time is compared against a reasonable period to re-establish cooling or supply an alternative water source (such as service water, makeup water, or fire protection system water). This evaluation included the determination of the time to boil. The time to boil represents the onset of loss of pool water inventory and is commonly used as a gage for establishing the comparison of consequences before and after a refueling project. The heat up rate in the SFP is a nearly linear function of the fuel decay heat load. The fuel decay heat load will increase subsequent to the proposed changes because of the increase in the number of stored assemblies. The heat up rate established for the limiting heat load conditions prior to the addition of canal racking was 10.8°F per hour. This would result in the pool temperature increasing from the maximum design temperature of 150°F to boiling in a period of 5.7 hours. The heat up rate established for the limiting heat load conditions subsequent to the proposed changes has been determined as 7.5°F per hour. This would result in the pool temperature increasing from the maximum design temperature of 150°F to boiling in a period of 8.4 hours.

This time to boil comparison was made for limiting heat load conditions. However, the end of this period of time does not represent the onset of any significant increase in offsite doses. As stated above, this consequence would result after fuel is uncovered through unchecked boiling and the resulting water level drop of approximately 25 feet to the top of the fuel storage racks. This depth is conservative, since the top of active fuel is below this level. Subsequent to the proposed changes under limiting heat loads the maximum boil-off rate will decrease to 40.9 gpm. This will result in the time lapse between loss of SFP cooling and the uncovering of the racks to increase to 48.5 hours.

As stated above, subsequent to racking the canal, the time to boil after loss of forced cooling in the most severe scenario was 8.4 hours. The ensuing rate of evaporative loss would not result in the fuel being uncovered until after an additional 40.1 hours. The margin concerning time to boil will increase due to the proposed modification. This increased margin is due to the conservatism of the assumptions previously used to determine the heat load for this condition (*i.e.* the assumption that all fuel assemblies in the core were transferred to the pool instantaneously). Also, another factor is that the required incore hold time prior to fuel movement will increase from 100 hours to 148 hours. Therefore, the calculated time to boil in this most severe scenario will increase subsequent to the proposed modification. In the unlikely event that all pool cooling is lost, sufficient time will continue to be available subsequent to the proposed changes for the operators to provide alternate means of cooling (*i.e.*, service water, makeup water, or fire protection system water) before fuel is uncovered. Therefore, the proposed changes represent no increase in the consequences of a loss of pool cooling.

The consequences of a design basis seismic event are not increased. The consequences of this accident are evaluated on the basis of subsequent fuel damage or compromise of the fuel storage or building configurations leading to radiological or criticality concerns. The canal racks have been analyzed and found to properly function during seismic motion. The stored fuel has been determined to remain intact and the storage racks maintain the fuel and fixed poison configurations subsequent to a seismic event. The structural capability of the pool and liner will not be exceeded under the appropriate combinations of dead weight, thermal, and seismic loads. The SFP structure will remain intact during a seismic event and will continue to adequately support and protect the fuel racks, stored fuel, and pool coolant. Thus, the consequences of a seismic event are not increased.

Therefore, it is concluded that the proposed changes do not significantly increase the probability or consequences of any accident previously evaluated.

2. Create the possibility of a new or different kind of accident from any previously analyzed.

During and following project implementation, the spent fuel must be safely stored, meeting the requirements 10 CFR 20 and 10 CFR 100. The installation activities as well as the use of the canal racks must be evaluated for the possibility of creating a new or different kind of accident from any previously analyzed.

This evaluation was done by reviewing the differences between the analyses and assumptions associated with the proposed storage configuration (existing racks plus canal racks) with those of the existing storage configuration. The accident scenarios associated with the existing racks were then reviewed to determine if the possibility of a new type of accident would be introduced by the implementation of the proposed modification. Also, the installation activities were evaluated.

Due to the proposed changes, the following events were considered as the only events which might represent a new or different kind of accident:

a. An accidental drop of a rack module into the pool during construction activity.

b. Fuel assembly mispositioning accident in the canal.

A construction accident resulting in a rack drop is an unlikely event. A rack-lifting rig will be used to lift and suspend the racks using the existing Fuel Handling Building crane. The crane, hoists and lifting rig have been or will be designed, tested and inspected to ensure that they will properly lift and transport the new racks. The postulated rack drop event is commonly referred to as a ''heavy load drop'' over the pools. Heavy loads will not be allowed to travel over any racks containing fuel assemblies. The area of concern represented by this event is that the pool structure will be compromised leading to loss of moderator/coolant. The question of a new or different type of event is answered by determining whether heavy load drops of this type have been considered previously. The last phase of the re-racking of the SFPs at KNP was completed in 1987. The rack modules transported during installation of the pool re-racking project were significantly larger than those associated with the proposed canal rack project. Also, the KNP Technical Specifications state that ''Placement of additional fuel storage racks is permitted, however, these racks must not traverse directly above spent fuel stored in the pools''. All movements of heavy loads will be strictly controlled by procedure, will follow approved safe load paths, and will be performed by qualified personnel. Therefore, the rack drop does not represent a new or different kind of accident.

Fuel assembly mispositioning in the canal is an unlikely event since assembly placement will be administratively controlled. The administrative controls will include positive, visual identification of each fuel assembly to be stored in the canal racks. The mispositioning event for the canal racks represents a change from the previously analyzed condition, since Kewaunee currently has no restriction on fuel storage.

However, the mispositioning event in the canal does not represent a new or different kind of accident. A fuel assembly mispositioning event has been previously analyzed for the existing racks and was found to be acceptable. The new mispositioning event for the canal racks was evaluated using similar techniques with similar acceptance criteria and was also shown to be acceptable. Therefore, since both events represent the mispositioning of a fuel assembly, the mispositioning of an assembly in the canal racks is not considered to represent a new or different kind of accident.

Under the extremely unlikely conditions of a mispositioning event involving the placement of a fresh (un-burned) fuel assembly in the canal racks, the boron in the pool water will maintain the required subcriticality margin. Only a small fraction of the minimum pool boron concentration required by the KNPP Technical Specifications would be required for this condition. Under the postulated accident condition of a total loss of boron from the pool water, proper subcriticality margin would exist. The multiple accident scenario of the extremely unlikely mispositioning event combined with a postulated total loss of pool boron is a non-credible condition. Therefore, although credit is taken for a small amount of boron in the pool water for one accident condition, a decrease of pool boron concentration is not a new or different kind of accident from any previously analyzed.

The proposed change does not involve the modification of any equipment credited in the mitigation of the design basis accidents. The proposed change meets all applicable requirements for the safe storage of spent fuel at KNP. Therefore, the potential for a new or previously unanalyzed accident is not created by the implementation of this modification.

The refueling canal does not have floor drains. Therefore, draining the refueling canal through a floor drain is not a postulated event.

3. Involve a significant reduction in the margin of safety.

The function of the SFP is to store the fuel assemblies in a subcritical and coolable configuration through all environmental and abnormal loadings, such as an earthquake or fuel assembly drop. The new rack design must meet all applicable requirements for safe storage and be functionally compatible with the SFP.

WPSC has addressed the safety issues related to the expanded pool storage capacity in the following areas:

a. Material, mechanical and structural considerations
b. Nuclear criticality
c. Thermal-hydraulic and pool cooling

The mechanical, material, and structural designs of the new racks have been reviewed in accordance with the applicable provisions of the NRC Guidance entitled, ''Review and Acceptance of Spent Fuel Storage and Handling Applications''. The rack materials used are compatible with the spent fuel assemblies and the SFP environment. The design of the new racks preserves the proper margin of safety during abnormal loads such as a dropped assembly and tensile loads from a stuck assembly. It has been shown that such loads will not invalidate the mechanical design and material selection to safely store fuel in a coolable and subcritical configuration.

The methodology used in the criticality analysis of the expanded SFP meets the appropriate NRC guidelines and ANSI standards. The margin of safety for subcriticality is maintained by having the neutron multiplication factor equal to, or less than, 0.95 under all accident conditions, including uncertainties. This criterion is the same as that used previously to establish criticality safety evaluation acceptance and remains satisfied for all analyzed accidents. Therefore, the accepted margin of safety remains the same.

The thermal-hydraulic and cooling evaluation of the pool demonstrated that the pool can be maintained below the specified thermal limits under all required design conditions. The pool temperature will not exceed 140°F during the failure of a cooling pump under normal offload conditions. The pool temperature will remain below the maximum design temperature of 150°F under maximum heat load conditions. The maximum local water temperature in the hot channel will remain below the boiling point. The fuel will not undergo any significant heat up after an accidental drop of a fuel assembly on top of the rack blocking the flow path. Following a loss of cooling to the pool sufficient time exists (48.5 hours for the limiting heat load) for the operators to intervene and line up alternate cooling paths and the means of inventory makeup before the onset of pool boiling. The thermal limit specified for the evaluations performed to support the proposed change is the same as was used in the previous evaluation. Therefore, the accepted margin of safety remains the same.

Thus, it is concluded that the changes do not involve a significant reduction in the margin of safety.

The NRC staff has reviewed the licensee's analysis and, based on this review, it appears that the three standards of 10 CFR 50.92(c) are satisfied. Therefore, the NRC staff proposes to determine that the amendment request involves no significant hazards consideration.

Attorney for licensee: Bradley D. Jackson, Esq., Foley and Lardner, P.O. Box 1497, Madison, WI 53701–1497.

NRC Section Chief: Claudia M. Craig.

South Carolina Electric & Gas Company (SCE&G), South Carolina Public Service Authority, Docket No. 50–395, Virgil C. Summer Nuclear Station (VCSNS), Unit No. 1., Fairfield County, South Carolina

Date of amendment request: September 14, 2000.

Description of amendment request: The proposed changes will delete Technical Specification (TS) Section 6.2.3 and revise TS Sections 6.3.1 and 6.5.2.8 to remove the references to the Independent Safety Engineering Group (ISEG).

Basis for proposed no significant hazards consideration determination: As required by 10 CFR 50.91(a), the licensee has provided its analysis of the issue of no significant hazards consideration, which is presented below:

South Carolina Electric & Gas Company (SCE&G) has evaluated the proposed changes to the VCSNS TS described above against the significant Hazards Criteria of 10 CFR 50.92 and has determined that the changes do not involve any significant hazard. The following is provided in support of this conclusion.

1. Does the proposed change involve a significant increase in the probability or consequences of an accident previously evaluated?

The proposed amendment is a programmatic and administrative change to delete the ISEG. The requirement for an ISEG is located within the Administrative Section of TS (Section 6.0). The ISEG functions in an oversight role and, as such, performs no actions that would affect any precursors to any accident previously evaluated. This change does not physically alter safety-related systems, nor does it affect the way in which safety-related systems perform their functions. However, the independent oversight functions and qualification requirements stated in TS are being performed by qualified personnel in other departments of the VCSNS organization. This assures that the functions and qualification requirements delineated for the ISEG are being met. Because the design of the facility and system operating parameters are not being changed, and the oversight functions are performed by other departments, the proposed amendment does not involve an increase in the probability or consequences of any accident previously evaluated.

2. Does the proposed change create the possibility of a new or different kind of accident from any accident previously evaluated?

The proposed amendment to delete the ISEG is a programmatic and administrative change. There are no physical alterations to safety-related systems and no changes to the functions of any safety-related systems. The independent oversight functions assigned to the ISEG are addressed by other departments within the VCSNS organization. Personnel in those departments meet the qualifications required of the ISEG. This assures that the oversight functions and qualification requirements delineated for the ISEG are being met. Oversight functions that are performed do not in themselves lead to activities that are considered as accident precursors or initiators. Because this change does not alter the design of the facility and system operating parameters are not being changed, and the oversight functions and qualification requirements of the ISEG are being met by other departments, the proposed amendment does not create the possibility of a new or different kind of accident from any accident previously evaluated.

3. Does this change involve a significant reduction in margin of safety?

The proposed amendment is a programmatic and administrative change to

delete the ISEG. This proposed change involves utilizing appropriately trained and qualified personnel in other departments to perform the oversight functions previously assigned to the ISEG. No physical alterations to safety-related systems and no changes to the functions of any safety-related systems are being made. The use of personnel in other departments to perform the oversight functions of the ISEG will provide assurance that plant operations continue to be conducted in a safe manner. These oversight functions will be performed by personnel that maintain their independence from line operations. Because the design of the facility and system operating parameters are not being changed, and the oversight functions of the ISEG are appropriately addressed by other departments and will continue to be performed, the proposed amendment does not involve a significant reduction in the margin of safety.

The NRC staff has reviewed the licensee's analysis and, based on this review, it appears that the three standards of 10 CFR 50.92(c) are satisfied. Therefore, the NRC staff proposes to determine that the amendment request involves no significant hazards consideration.

Attorney for licensee: Thomas G. Eppink, South Carolina Electric & Gas Company, Post Office Box 764, Columbia, South Carolina 29218

NRC Section Chief: Richard L. Emch, Jr.

TXU Electric, Docket Nos. 50–445 and 50–446, Comanche Peak Steam Electric Station, Units 1 and 2, Somervell County, Texas

Date of amendment request: September 6, 2000.

Brief description of amendments: The proposed amendment would change Comanche Peak Steam Electric Station (CPSES), Units 1 and 2, Technical Specification (TS) 5.5.9, ''Steam Generator Tube Surveillance Program,'' to permit installation of a laser welded tube sleeve as an alternative to plugging defective steam generator tubes. TS 5.5.10, ''Steam Generator Tube Inspection Report,'' would be revised to address reporting requirements for repaired tubes. Also, an editorial correction is proposed to Table 5.5–2.

Basis for proposed no significant hazards consideration determination: As required by 10 CFR 50.91(a), the licensee has provided its analysis of the issue of no significant hazards consideration, which is presented below:

1. Do the proposed changes involve a significant increase in the probability or consequences of an accident previously evaluated?

Response: No.

The tubesheet and/or tube support plate intersection laser welded sleeve configurations [were] designed and analyzed in accordance with the requirements of the ASME Code [American Society of Mechanical Engineers Boiler and Pressure Vessel Code]. Fatigue and stress analyses of the sleeved tube assemblies produced acceptable results. Additionally, mechanical testing for the full length tubesheet sleeves has shown that the structural strength of Alloy 690 sleeves under normal, faulted, and upset conditions is within acceptable limits. Leakage testing for these same ¾ inch tube sleeves has demonstrated that primary to secondary leakage is not expected during any plant conditions. Similar results are anticipated for the lower joints of elevated tubesheet sleeves. Confirmatory mechanical and leak testing will be conducted supporting the installation of elevated tubesheet sleeves at CPSES, Unit 1.

The hypothetical consequences of failure of a sleeve would be bounded by the current steam generator tube rupture analysis included in the Comanche Peak Steam Electric Station (CPSES) Final Safety Analysis Report (FSAR). Due to the slight reduction diameter caused by the sleeve wall thickness, it is expected that primary coolant release rates would be slightly less than assumed for the steam generator tube rupture analysis (depending on the break location), and therefore, would result in lower total primary fluid mass release to the secondary system. Combinations of tubesheet sleeves and tube support plate sleeves would reduce the primary fluid flow through the sleeved tube assembly due to the series of diameter reductions the fluid would have to pass on its way to the break area. The overall effect would be reduced steam generator tube rupture release rates. The proposed Technical Specification change to support the installation of Alloy 690 laser welded sleeves does not adversely impact any other previously evaluated design basis accident or the results of (LOCA) [loss-of-coolant accident] and non-LOCA accident analyses for the current Technical Specification minimum RCS [reactor coolant system] flow rate.

Conformance of the sleeve design with the applicable sections of the ASME Code and the successful completion of the leakage and mechanical tests (for the lower sleeve joint for the elevated tubesheet sleeves (ETS), support the conclusion that the installation of laser welded tube sleeves will not increase the probability or consequences of an accident previously evaluated. Depending upon the break location for a postulated steam generator tube rupture event, implementation of tube sleeving could act to reduce the radiological consequences to the public due to reduced flow rate through a sleeved tube compared [to] a non-sleeved tube based on the restriction afforded by the sleeve wall thickness.

The editorial correction [to] Technical Specification (TS) Table 5.5–2 is typographical in nature and does not require additional evaluation. Therefore, the proposed changes do not involve a significant increase in the probability or consequences of an accident previously evaluated.

2. Do the proposed changes create the possibility of a new or different kind of accident from any accident previously evaluated?

Response: No.

Implementation of the laser welded sleeving (LWS) will not introduce significant or adverse changes to the plant design basis. Stress and fatigue analysis of the repair has shown the ASME Code minimum stress values are not exceeded. Implementation of laser welded sleeving restores the overall tube bundle structural and leakage integrity to a level consistent to that of the originally supplied tubing during all plant conditions. Any hypothetical accident as a result of potential tube or sleeve degradation in the repaired portion of the tube is bounded by the existing tube rupture accident analysis. Finally, through the results obtained from the extensive testing and qualification program, the possibility of a common-mode failure, such as multiple simultaneous steam generator tube failures, is not credible. Therefore, it is concluded that the proposed changes do not create the possibility of a new or different kind of accident from any accident previously evaluated.

The editorial correction [to] TS Table 5.5–2 is typographical in nature and does not require additional evaluation. Therefore, the proposed change does not create the possibility of a new or different kind of accident from any previously evaluated.

3. Do the proposed changes involve a significant reduction in a margin of safety?

Response: No.

The laser welded sleeving repair of degraded steam generated tubes as identified in References 1 and 2 was shown by analysis to restore the integrity of the tube bundle consistent with its original design basis condition. The safety factors used in the design of sleeves for the repair of degraded tubes are consistent with the safety factors in the ASME Boiler and Pressure Vessel Code used in steam generator design. The design of the full length tubesheet sleeve lower joints for the ¾ inch tube sleeves (roll-first installation sequence) were verified by testing to preclude pullout and primary-to-secondary leakage during normal and postulated accident conditions. The qualification of the lower joint of the TSS [tube support sleeve], ETS and the full length tubesheet sleeves (FLTS) (roll-last installation sequence) will be confirmed at the time of the sleeving outage. Since the installed sleeve represents a portion of the pressure boundary, a baseline inspection of these areas is required prior to operation with the sleeves installed. The portions of the installed sleeves assembly which represent the reactor coolant pressure boundary can be monitored for the initiation and progression of sleeve/tube wall degradation, thus satisfying the recommendations of Regulatory Guide 1.83, Rev. 1. The portion of the tube bridged by the sleeve joints is effectively removed from the pressure boundary, and the sleeve then forms the new pressure boundary. The areas of the sleeved tube assembly which require inspection are defined in WCAP–13698, Rev. 3.

EPRI [Electric Power Research Institute] qualified eddy current techniques will be used for the detection of tube degradation in ¾ inch laser welded sleeved tubes. Alternate

inspection techniques may be used as they become available, as long as it can be demonstrated that the technique used provides the same degree or greater degree of inspection rigor.

The effect of sleeving on the design transients and accident analyses were reviewed and found to remain valid up to the level of steam generator tube plugging consistent with the minimum reactor flow rate as specified in Technical Specification 3.4.1. Continued compliance with the RCS flow limits of Technical Specification 3.4.1 is assured through precision flow measurements.

Because all relevant safety analyses were reviewed and found to remain valid, and because the appropriate design margins are maintained through compliance with the relevant ASME Code requirements, it is concluded that the proposed change does not involve a significant reduction in a margin of safety.

The editorial correction [to] TS Table 5.5–2 is typographical in nature and does not require additional evaluation. The confirming modifications to the reporting requirements of TS 5.6.10 are administrative only. Therefore, these proposed changes do not involve a significant reduction in a margin of safety.

The NRC staff has reviewed the licensee's analysis and, based on this review, it appears that the three standards of 10 CFR 50.92(c) are satisfied. Therefore, the NRC staff proposes to determine that the amendment request involves no significant hazards consideration.

Attorney for licensee: George L. Edgar, Esq., Morgan, Lewis and Bockius, 1800 M Street, NW., Washington, DC 20036.

NRC Section Chief: Robert A. Gramm.

TXU Electric, Docket Nos. 50–445 and 50–446, Comanche Peak Steam Electric Station, Units 1 and 2, Somervell County, Texas

Date of amendment request: September 15, 2000.

Brief description of amendments: The proposed change replaces the general references currently provided in Technical Specification 5.6.6 for determining the reactor coolant system pressure and temperature limits with the requirement that the Pressure/Temperature Limits and Low Temperature Overpressure Protection System Setpoints shall not be revised without prior U.S. Nuclear Regulatory Commission approval.

Basis for proposed no significant hazards consideration determination: As required by 10 CFR 50.91(a), the licensee has provided its analysis of the issue of no significant hazards consideration, which is presented below:

1. Do the proposed changes involve a significant increase in the probability or consequences of an accident previously evaluated?

Response: No.

The addition of this requirement to the Technical Specifications is administrative and has no impact on accident initiation or mitigation. Therefore, the proposed changes do not involve a significant increase in the probability or consequences of an accident previously evaluated.

2. Do the proposed changes create the possibility of a new or different kind of accident from any accident previously evaluated?

Response: No.

The addition of this requirement to the Technical Specifications is administrative and cannot initiate an accident. Therefore, the proposed change does not create the possibility of a new or different kind of accident from any previously evaluated.

3. Do the proposed changes involve a significant reduction in a margin of safety?

Response: No.

The addition of this requirement to the Technical Specifications is administrative and has no impact on accident initiation or mitigation. Therefore the proposed change does not involve a reduction in a margin of safety.

The NRC staff has reviewed the licensee's analysis and, based on this review, it appears that the three standards of 10 CFR 50.92(c) are satisfied. Therefore, the NRC staff proposes to determine that the amendment request involves no significant hazards consideration.

Attorney for licensee: George L. Edgar, Esq., Morgan, Lewis and Bockius, 1800 M Street, NW., Washington, DC 20036.

NRC Section Chief: Robert A. Gramm.

Virginia Electric and Power Company, Docket Nos. 50–280 and 50–281, Surry Power Station, Unit Nos. 1 and 2, Surry County, Virginia

Date of amendment request: September 22, 2000.

Description of amendment request: The proposed changes would remove obsolete license conditions from the Operating Licenses (OLs) and implement associated changes to the Technical Specifications (TS) and Bases. The proposed changes include removal of license conditions associated with completed facility modifications (including the Steam Generator (SG) Repair Program, as well as support modifications related to Leak-Before-Break Technology); removal of superseded license conditions (addressing security); relocation of secondary water chemistry monitoring program requirements into the TS; removal of expired license conditions and TS (addressing service water piping restoration); and editorial changes.

Basis for proposed no significant hazards consideration determination: As required by 10 CFR 50.91(a), the licensee has provided its analysis of the issue of no significant hazards consideration, which is presented below:

Virginia Electric and Power Company has reviewed the requirements of 10 CFR 50.92 as they relate to the proposed administrative change to the Operating Licenses, DPR–32 and DPR–37, and the associated Technical Specifications for Surry Units 1 and 2 and determined that a significant hazards consideration is not involved. The proposed administrative change to the Surry Operating Licenses and associated Technical Specifications makes minor editorial corrections, relocates one license condition to Appendix A of the license, and removes outdated, superceded or otherwise non-applicable license conditions and Technical Specifications requirements and provides a license document that is directly applicable to the current plant licensing and design bases. There is no safety significance associated with this proposed change since the change does not alter any currently applicable Operating License requirements. Accordingly, the current Surry licensing and design bases are unchanged. In support of this conclusion, the following evaluation is provided.

Criterion 1—The proposed license amendment does not involve a significant increase in the probability or consequences of an accident previously evaluated.

The proposed change is administrative (and in part editorial) in nature and neither station operations nor design are affected by the change. The removal of license conditions and associated Technical Specifications regarding superceded (OL Sections 3.H and 3.L) or expired (OL Section 3.0, TS Table 3.7–2, and TS 3.14) requirements has no impact on plant operations since the requirements no longer have a legitimate means of being applied. The relocation within the Operating License of the requirement to have a secondary water chemistry monitoring program (OL Section 3.K) to new Section 6.4.P of the Technical Specifications does not alter the program or its implementation. The impact of the replacement SGs at Surry and the re-design of the SG and RCP [reactor coolant pump] supports on the previously evaluated accidents was performed, approved and documented by the issuance of the license amendments for OL Sections 3. G and 3.M. Removal of these license conditions which refer to completed work and a design and licensing bases that is documented in the UFSAR [updated final safety analysis report] also does not alter station operation or the design of the affected components. The proposed change is within the current design and licensing bases of the facility. This change does not affect the initiators of analyzed events nor the assumed mitigation of accident or transient events. Analyzed events are initiated by the failure of plant structures, systems, or components. This change does not impact the condition or performance of these structures, systems or components. Consequences of analyzed events are the result of the plant being

operated within assumed parameters at the onset of any event, and the successful functioning of at least one train or division of the equipment credited with mitigating the event. These changes do not impact the capability of the credited equipment to perform, nor is there any change in the likelihood that credited equipment will fail to perform. As a result, the proposed change to the Surry Operating Licenses and Technical Specifications does not involve any increase in the probability or the consequences of any accident or malfunction of equipment important to safety previously evaluated.

Criterion 2—The proposed license amendment does not create the possibility of a new or different kind of accident from any accident previously evaluated.

The proposed change is administrative (and in part editorial) in nature. The license conditions and Technical Specifications that are being removed or relocated by this proposed change do not impact station operations or station equipment in any manner. The proposed change does not involve a physical alteration of the plant, nor a change in the methods used to respond to plant transients that has not been previously analyzed. No new or different equipment is being installed and no installed equipment is being removed or operated in a different manner. There is no alteration to the parameters within which the plant is normally operated or in the setpoints, which initiate protective or mitigative actions. Consequently, no new failure modes are introduced and the proposed change to the Surry Operating Licenses and Technical Specifications does not create the possibility of a new or different kind of accident or malfunction of equipment important to safety from any previously evaluated.

Criterion 3—The proposed license amendment does not involve a significant reduction in a margin of safety.

The proposed change is administrative (and in part editorial) in nature and neither station operations nor design are affected by the change. Margin of safety is established through the design of the plant structures, systems and components, the parameters within which the plant is operated, and the establishment of the setpoints for the actuation of equipment relied upon to respond to an event. Since station operations are not affected by the proposed change, the change does not impact the condition or performance of structures, systems or components relied upon for accident mitigation or any safety analysis assumptions. Therefore, the proposed change to the Surry Operating Licenses and Technical Specifications does not involve a reduction in any margin of safety described in the bases of the Technical Specifications.

The NRC staff has reviewed the licensee's analysis and, based on this review, it appears that the three standards of 50.92(c) are satisfied. Therefore, the NRC staff proposes to determine that the amendment request involves no significant hazards consideration.

Attorney for licensee: Donald P. Irwin, Esq., Hinton and Williams, Riverfront Plaza, East Tower, 951 E. Byrd Street, Richmond, Virginia 23219.

NRC Section Chief: Richard L. Emch.

Previously Published Notices of Consideration of Issuance of Amendments to Facility Operating Licenses, Proposed No Significant Hazards Consideration Determination, and Opportunity for a Hearing

The following notices were previously published as separate individual notices. The notice content was the same as above. They were published as individual notices either because time did not allow the Commission to wait for this biweekly notice or because the action involved exigent circumstances. They are repeated here because the biweekly notice lists all amendments issued or proposed to be issued involving no significant hazards consideration.

For details, see the individual notice in the **Federal Register** on the day and page cited. This notice does not extend the notice period of the original notice.

Southern California Edison Company, et al., Docket Nos. 50–361 and 50–362, San Onofre Nuclear Generating Station, Units 2 and 3, San Diego County, California

Date of amendment requests: September 22, 2000 (PCN–520).

Brief Description of amendment requests: The proposed amendments would revise the San Onofre Units 2 and 3 technical specifications (TSs) applicable in shutdown MODES relating to positive reactivity additions. For a summary of specific proposed TS changes, see Tables 1 and 2 of the licensee's application dated September 22, 2000. The licensee's proposal generally conforms to industry Technical Specification Task Force (TSTF) TSTF–286, Revision 2.

Date of publication of individual notice in ***Federal Register:*** October 13, 2000 (65 FR 60984).

Expiration date of individual notice: November 13, 2000.

Notice of Issuance of Amendments to Facility Operating Licenses

During the period since publication of the last biweekly notice, the Commission has issued the following amendments. The Commission has determined for each of these amendments that the application complies with the standards and requirements of the Atomic Energy Act of 1954, as amended (the Act), and the Commission's rules and regulations. The Commission has made appropriate findings as required by the Act and the Commission's rules and regulations in 10 CFR Chapter I, which are set forth in the license amendment.

Notice of Consideration of Issuance of Amendment to Facility Operating License, Proposed No Significant Hazards Consideration Determination, and Opportunity for A Hearing in connection with these actions was published in the **Federal Register** as indicated.

Unless otherwise indicated, the Commission has determined that these amendments satisfy the criteria for categorical exclusion in accordance with 10 CFR 51.22. Therefore, pursuant to 10 CFR 51.22(b), no environmental impact statement or environmental assessment need be prepared for these amendments. If the Commission has prepared an environmental assessment under the special circumstances provision in 10 CFR 51.12(b) and has made a determination based on that assessment, it is so indicated.

For further details with respect to the action see (1) the applications for amendment, (2) the amendment, and (3) the Commission's related letter, Safety Evaluation and/or Environmental Assessment as indicated. All of these items are available for public inspection at the Commission's Public Document Room, located at One White Flint North, 11555 Rockville Pike (first floor), Rockville, Maryland 20852. Publicly available records will be accessible electronically from the ADAMS Public Library component on the NRC Web site, http://www.nrc.gov (the Electronic Reading Room).

AmerGen Energy Company, LLC, Docket No. 50–461, Clinton Power Station, Unit 1, DeWitt County, Illinois

Date of application for amendment: July 14, 2000.

Brief description of amendment: The amendment slightly reduces the required minimum reactor cavity water level.

Date of issuance: October 12, 2000.

Effective date: As of the date of issuance and shall be implemented within 30 days.

Amendment No.: 133.

Facility Operating License No. NPF–62: The amendment revised the Technical Specifications.

Date of initial notice in ***Federal Register:*** August 23, 2000 (65 FR 51347).

The Commission's related evaluation of the amendment is contained in a Safety Evaluation dated October 12, 2000.

No significant hazards consideration comments received: No.

AmerGen Energy Company, LLC, Docket No. 50–289, Three Mile Island Nuclear Station, Unit 1, Dauphin County, Pennsylvania

Date of application for amendment: November 30, 1999, as supplemented August 11, and September 14, 2000.

Brief description of amendment: The amendment revised the test standard for laboratory testing of activated charcoal to test in accordance with the ASTM (American Society for Testing and Materials) D3803–1989 standard in response to Generic Letter 99–02, ''Laboratory Testing of Nuclear-Grade Activated Charcoal.''

Date of issuance: October 18, 2000.

Effective date: As of the date of issuance and shall be implemented within 30 days.

Amendment No.: 226.

Facility Operating License No. DPR–50. Amendment revised the Technical Specifications.

Date of initial notice in ***Federal Register:*** March 8, 2000 (65 FR 12287).

The August 11, and September 14, 2000, letters provided clarifying information that did not change the initial no significant hazards consideration determination and did not expand the scope of the original notice.

The Commission's related evaluation of the amendment is contained in a Safety Evaluation dated October 18, 2000.

No significant hazards consideration comments received: No.

Commonwealth Edison Company, Docket Nos. 50–373 and 50–374, LaSalle County Station, Units 1 and 2, LaSalle County, Illinois

Date of application for amendments: May 31, 2000.

Brief description of amendments: The amendments deleted the requirements related to the shorting links from Technical Specification (TS) Sections 3/4.3.1, ''Reactor Protection System Instrumentation;'' 3/4.9.2, ''Refueling Operations Instrumentation;'' and 3/4.10.3, ''Shutdown Margin Demonstrations;'' and increased the required signal-to-noise ratio for the source range monitor in TS Sections 3/4.9.2 and 3/4.3.7.6, ''Source Range Monitors.''

Date of issuance: October 10, 2000.

Effective date: Immediately, to be implemented within 60 days.

Amendment Nos.: 142 and 128.

Facility Operating License Nos. NPF–11 and NPF–18: The amendments revised the Technical Specifications.

Date of initial notice in ***Federal Register:*** August 9, 2000 (65 FR 48745).

The Commission's related evaluation of the amendments is contained in a Safety Evaluation dated October 10, 2000.

No significant hazards consideration comments received: No.

Commonwealth Edison Company, Docket Nos. 50–373 and 50–374, LaSalle County Station, Units 1 and 2, LaSalle County, Illinois

Date of application for amendments: May 1, 2000, as supplemented by letter dated August 11, 2000.

Brief description of amendments: The amendments revise Technical Specification 3/4.8.1, ''A. C. Sources—Operating,'' to permit functional testing of the emergency diesel generators to be performed during power operation.

Date of issuance: October 16, 2000.

Effective date: As of the date of issuance and shall be implemented within 30 days.

Amendment Nos.: 143 and 129.

Facility Operating License Nos. NPF–11 and NPF–18: The amendments revised the Technical Specifications.

Date of initial notice in ***Federal Register:*** June 14, 2000 (65 FR 37423).

The supplemental information contained clarifying information and did not change the initial no significant hazards consideration determination and did not expand the scope of the original **Federal Register** notice. The Commission's related evaluation of the amendments is contained in a Safety Evaluation dated October 16, 2000.

No significant hazards consideration comments received: No.

Commonwealth Edison Company, Docket Nos. 50–254 and 50–265, Quad Cities Nuclear Power Station, Units 1 and 2, Rock Island County, Illinois

Date of application for amendments: December 30, 1999; as supplemented on August 3, 2000.

Brief description of amendments: The amendments revised the technical specifications to: (1) Remove the Main Steamline Radiation Monitor (MSLRM) scram and main steamline isolation functions, and (2) add a new requirement for the MSLRM mechanical vacuum pump trip function.

Date of issuance: October 13, 2000.

Effective date: Immediately, to be implemented within 120 days.

Amendment Nos.: 196 and 192.

Facility Operating License Nos. DPR–29 and DPR–30: The amendments revised the Technical Specifications.

Date of initial notice in ***Federal Register:*** August 9, 2000 (65 FR 48747). The August 3, 2000, supplement provided additional information that did not change the scope of the original proposed no significant hazards findings.

The Commission's related evaluation of the amendments is contained in a Safety Evaluation dated October 13, 2000.

No significant hazards consideration comments received: No.

Consolidated Edison Company of New York, Inc., Docket No. 50–003, Indian Point Nuclear Generating Station, Unit 1

Date of amendment request: February 14, 2000.

Brief description of amendment: The amendment change to Indian Point Nuclear Generating Station, Unit 1, revised Technical Specification Sections 2.10.2, 3.1.2, 3.2.1, 4.1.8.1, and 4.1.8.1.b. Specifically, Sections 3.1.2, 3.2.1, and 4.1.8.1.b, make organizational title changes that are administrative in nature and reflect a streamlining of the Consolidated Edison Company of New York, Inc.''s management structure, Section 4.1.8.1 is changed to reflect the renumbering of 10 CFR Part 20, and a footnote was moved from Section 2.11 to Section 2.10.2 to improve the clarity of the Technical Specification since it pertains to text in subsection 2.10.2.4.

Date of issuance: October 12, 2000.

Effective date: As of the date of issuance and shall be implemented within 30 days from the date of issuance.

Amendment No: 48.

Facility Operating License No. DPR–5: The amendment revised the Technical Specifications.

Date of initial notice in ***Federal Register:*** April 5, 2000 (65 FR 17912).

The Commission's related evaluation of the amendment is contained in a Safety Evaluation dated October 12, 2000.

No significant hazards consideration comments received: No.

Entergy Nuclear Generation Company, Docket No. 50–293, Pilgrim Nuclear Power Station, Plymouth County, Massachusetts

Date of application for amendment: November 22, 1999.

Brief description of amendment: The amendment authorized a change to the Pilgrim Nuclear Power Station Updated Final Safety Analysis Report (UFSAR). The change involves the use of containment overpressure to ensure sufficient net positive suction head for the emergency core cooling system pumps following a loss-of-coolant accident.

Date of issuance: October 6, 2000.

Effective date: As of the date of issuance and shall be implemented within 30 day from the date of issuance.

Amendment No.: 185.

Facility Operating License No. DPR–35: Amendment revised the UFSAR.

*Date of initial notice in **Federal Register:*** March 8, 2000 (65 FR 12290).

The Commission's related evaluation of the amendment is contained in a Safety Evaluation dated October 6, 2000.

No significant hazards consideration comments received: No.

Entergy Nuclear Generation Company, Docket No. 50–293, Pilgrim Nuclear Power Station, Plymouth County, Massachusetts

Date of application for amendment: June 16, 1999, as supplemented on May 4 and July 10, 2000.

Brief description of amendment: The requested changes incorporate Technical Specification (TS) changes to comply with the operating requirements derived from GE Report, NEDO–21231, ''Banked Position Withdrawal Sequence (BPWS)'', dated January 1977, as referenced in NEDE–24011–P–A. The TS changes incorporate Specifications and Actions based upon the plant-specific CRDA and BPWS for 20% rated thermal power (RTP) and 280 cal/gram peak fuel enthalpy. The TS changes also include changes to the control rod worth limits to resolve Licensee Event Report (LER) 98–006–00, dated April 30, 1998, and its supplemental LER 98–006–01, dated August 27, 1988.

Date of issuance: October 16, 2000.

Effective date: As of the date of issuance, and shall be implemented within 30 days.

Amendment No.: 186.

Facility Operating License No. DPR–35: Amendment revised the Technical Specifications.

*Date of initial notice in **Federal Register:*** August 23, 2000 (65 FR 51350).

The May 4 and July 10, 2000, letters provided clarifying information that did not change the initial proposed no significant hazards consideration determination or expand the scope of the application as published in the **Federal Register**.

The Commission's related evaluation of the amendment is contained in a Safety Evaluation dated October 16, 2000.

No significant hazards consideration comments received: No.

Entergy Operations, Inc., Docket No. 50–368, Arkansas Nuclear One, Unit No. 2, Pope County, Arkansas

Date of application for amendment: August 18, 1999, as supplemented by letters dated June 29, July 19, and August 9, 2000.

Brief description of amendment: The amendment revised Technical Specification 4.4.5, ''Steam Generators,'' to note that the requirements for inservice inspection do not apply during the steam generator replacement outage (2R14), to revise the requirement for tube inspection to mean an inspection from tube end (cold leg side) to tube end (hot leg side), to delete inspection requirements associated with steam generator tube sleeving and repair limits, to revise the preservice inspection requirements on when the hydrostatic test and the eddy current inspection of the tubes would be performed, and to revise the reporting frequency of the results of steam generator tube inspections to within 12 months following completion of the inservice inspection. Related changes to the Bases were also made.

Date of issuance: October 4, 2000.

Effective date: As of the date of issuance to be implemented prior to startup from the 2R14 refueling outage.

Amendment No.: 223.

Facility Operating License No. NPF–6: Amendment revised the Technical Specifications.

*Date of initial notice in **Federal Register:*** February 23, 2000 (65 FR 9005). The application was renoticed on August 23, 2000 (65 FR 51353).

The Commission's related evaluation of the amendment is contained in a Safety Evaluation dated October 4, 2000.

No significant hazards consideration comments received: No.

FirstEnergy Nuclear Operating Company, et al., Docket No. 50–412, Beaver Valley Power Station, Unit 2, Shippingport, Pennsylvania

Date of application for amendment: September 1, 2000.

Brief description of amendment: The amendment revised certain 18-month surveillance requirements in the technical specifications by eliminating the condition that testing be conducted during shutdown, or during cold shutdown or refueling mode. The affected systems are emergency core cooling system, containment depressurization and cooling system, chemical addition system, and containment isolation valve system.

Date of issuance: October 13, 2000.

Effective date: As of date of issuance and shall be implemented within 60 days.

Amendment No: 118.

Facility Operating License No. NPF–73. Amendment revised the technical specifications.

*Date of initial notice in **Federal Register:*** September 12, 2000 (65 FR 55056).

The Commission's related evaluation of the amendment is contained in a Safety Evaluation dated October 13, 2000.

No significant hazards consideration comments received: No.

FirstEnergy Nuclear Operating Company, Docket No. 50–440, Perry Nuclear Power Plant, Unit 1, Lake County, Ohio

Date of application for amendment: November 1, 1999, and as supplemented by letter dated May 22, 2000.

Brief description of amendment: Consistent with the guidance of Generic Letter 99–02, ''Laboratory Testing of Nuclear Grade Activated Charcoal,'' this amendment modifies existing Technical Specification 5.5.7, ''Ventilation Filter Testing Program (VFTP),'' to reference ASTM D3803—1989, ''Standard Test Method for Nuclear-Grade Activated Carbon.'' The amendment also incorporates the suggested safety factor for charcoal filter efficiency regarding methyl iodide penetration.

Date of issuance: October 12, 2000.

Effective date: As of the date of issuance and shall be implemented within 90 days.

Amendment No.: 117.

Facility Operating License No. NPF–58: This amendment revised the Technical Specifications.

*Date of initial notice in **Federal Register:*** December 15, 1999 (64 FR 70088).

The supplemental information contained clarifying information and did not change the initial no significant hazards consideration determination and did not expand the scope of the original **Federal Register** notice.

The Commission's related evaluation of the amendment is contained in a Safety Evaluation dated October 12, 2000.

No significant hazards consideration comments received: No.

Indiana Michigan Power Company, Docket Nos. 50–315 and 50–316, Donald C. Cook Nuclear Plant, Units 1 and 2, Berrien County, Michigan

Date of application for amendments: May 30, 2000.

Brief description of amendments: The amendments would make changes to several Technical Specifications to reflect implementation of the revised 10 CFR Part 20, ''Standards for Protection Against Radiation.''

Date of issuance: October 10, 2000.

Effective date: As of the date of issuance and shall be implemented within 45 days.

Amendment Nos.: 245 and 226.

Facility Operating License Nos. DPR–58 and DPR–74: Amendments revised the Technical Specifications.

*Date of initial notice in **Federal Register:*** August 9, 2000 (65 FR 48752).

The Commission's related evaluation of the amendments is contained in a Safety Evaluation dated October 10, 2000.

No significant hazards consideration comments received: No.

North Atlantic Energy Service Corporation, et al., Docket No. 50–443, Seabrook Station, Unit No. 1, Rockingham County, New Hampshire

Date of amendment request: April 28, 2000.

Description of amendment request: The amendment implements the Relaxed Axial Offset Control (RAOC) operating strategy in support of the use of upgraded Westinghouse fuel with Intermediate Flow Mixers.

Date of issuance: October 6, 2000.

Effective date: As of its date of issuance, and shall be implemented at commencement of Cycle 8 operation (scheduled for November 2000).

Amendment No.: 76.

Facility Operating License No. NPF–86: Amendment revised the Technical Specifications.

Date of initial notice in ***Federal Register:*** May 31, 2000 (65 FR 34747).

The Commission's related evaluation of the amendment is contained in a Safety Evaluation dated October 6, 2000.

No significant hazards consideration comments received: No.

Northeast Nuclear Energy Company, et al., Docket No. 50–423, Millstone Nuclear Power Station, Unit No. 3, New London County, Connecticut

Date of application for amendment: April 19, 2000.

Brief description of amendment: This amendment modifies Technical Specification (TS) 3.7.1.5, ''Plant System—Main Steam Line Isolation Valves.'' Specifically, the change removes the requirement to perform partial stroke testing of the main steam line isolation valves during power operation, modifies the TS wording for clarity, combines two surveillance requirements into one, and modifies the associated TS Bases for consistency.

Date of issuance: October 19, 2000.

Effective date: As of the date of issuance and shall be implemented within 30 days from the date of issuance.

Amendment No.: 185.

Facility Operating License No. NPF–49: Amendment revised the Technical Specifications.

Date of initial notice in ***Federal Register:*** August 23, 2000 (65 FR 51360).

The Commission's related evaluation of the amendment is contained in a Safety Evaluation dated October 19, 2000.

No significant hazards consideration comments received: No.

PECO Energy Company, Docket Nos. 50–352 and 50–353, Limerick Generating Station, Units 1 and 2, Montgomery County, Pennsylvania

Date of application for amendments: December 15, 1999, as supplemented August 24, 2000.

Brief description of amendments: The amendments removed TS Table 3.6.3–1 ''Primary Containment Isolation Valves,'' and references to the TS Table from the TSs and relocated the information from the TS Table to the Technical Requirements Manual. In addition, an administrative change was made which deleted references to TS Tables 3.6.5.2.1–1 and 3.6.5.2.2–1.

Date of issuance: October 18, 2000.

Effective date: As of date of issuance and shall be implemented within 30 days.

Amendment Nos.: 146 and 107.

Facility Operating License Nos. NPF–39 and NPF–85. The amendments revised the Technical Specifications.

Date of initial notice in ***Federal Register:*** March 8, 2000 (65 FR 12294).

The August 24, 2000, letter provided clarifying information that did not change the initial proposed no significant hazards consideration determination or expand the scope of the original **Federal Register** Notice.

The Commission's related evaluation of the amendments is contained in a Safety Evaluation dated October 18, 2000.

No significant hazards consideration comments received: No.

Power Authority of the State of New York, Docket No. 50–333, James A. FitzPatrick Nuclear Power Plant, Oswego County, New York

Date of application for amendment: February 3, 2000.

Brief description of amendment: The amendment revises Technical Specification Table 3.2–7 by changing the reactor water level setpoint for the anticipated transient without scram, the recirculation pump trip function, and the alternate rod insertion function.

Date of issuance: October 10, 2000.

Effective date: As of the date of issuance to be implemented within 30 days.

Amendment No.: 264.

Facility Operating License No. DPR–59: Amendment revised the Technical Specifications.

Date of initial notice in ***Federal Register:*** March 22, 2000 (65 FR 15383).

The Commission's related evaluation of the amendment is contained in a Safety Evaluation dated October 10, 2000.

No significant hazards consideration comments received: No.

Power Authority of the State of New York, Docket No. 50–333, James A. FitzPatrick Nuclear Power Plant, Oswego County, New York

Date of application for amendment: December 20, 1999, as supplemented February 4, 2000.

Brief description of amendment: The amendment changes the Main Steam Isolation Valve closure scram trip level setting from ≤10 percent to ≤15 percent valve closure.

Date of issuance: October 10, 2000.

Effective date: As of the date of issuance to be implemented within 30 days.

Amendment No.: 265.

Facility Operating License No. DPR–59: Amendment revised the Technical Specifications.

Date of initial notice in ***Federal Register:*** February 9, 2000 (65 FR 6410).

The February 4, 2000, letter provided clarifying information that did not change the initial proposed no significant hazards consideration determination and did not expand the amendment beyond the scope of the original notice.

The Commission's related evaluation of the amendment is contained in a Safety Evaluation dated October 10, 2000.

No significant hazards consideration comments received: No.

Rochester Gas and Electric Corporation, Docket No. 50–244, R. E. Ginna Nuclear Power Plant, Wayne County, New York

Date of application for amendment: July 21, 2000

Brief description of amendment: The amendment revises the Technical Specifications to remove the Control Room Emergency Air Treatment System Actuation Instrumentation operability during Modes 5 and 6 except during core alterations and fuel movement based on the control room dose calculations.

Date of issuance: October 10, 2000.

Effective date: October 10, 2000.

Amendment No.: 78.

Facility Operating License No. DPR–18: Amendment revised the Technical Specifications.

Date of initial notice in ***Federal Register:*** August 9, 2000 (65 FR 48757).

The Commission's related evaluation of the amendment is contained in a Safety Evaluation dated October 10, 2000.

No significant hazards consideration comments received: No.

Southern California Edison Company, et al., Docket Nos. 50–361 and 50–362, San Onofre Nuclear Generating Station, Units 2 and 3, San Diego County, California

Date of application for amendments: February 23, 2000, as supplemented July 7, 2000.

Brief description of amendments: The amendments revise the licensing basis for San Onofre Nuclear Generating Station (SONGS) Units 2 and 3 regarding the methodology for measuring the reactivity worth of control element assembly (CEA) groups during low power physics testing following a refueling. The amendments allow measuring the worth of approximately three-fourths of the full-length CEA groups each refueling cycle rather than the present methodology, which measures the worth of all full-length CEA groups each refueling cycle.

Date of issuance: October 10, 2000.

Effective date: October 10, 2000. Implementation includes incorporation of the changes into the Updated Final Safety Analysis Report (UFSAR) at the next update of the UFSAR in accordance with the schedule in 10 CFR 50.71(e).

Amendment Nos.: Unit 2–173; Unit 3–164.

Facility Operating License Nos. NPF–10 and NPF–15: The amendments authorized revision of the UFSAR Section 4.2.1.5.2, CEA Performance Testing.

Date of initial notice in ***Federal Register:*** March 22, 2000 (65 FR 15385).

The Commission's related evaluation of the amendments is contained in a Safety Evaluation dated October 10, 2000.

No significant hazards consideration comments received: No.

Union Electric Company, Docket No. 50–483, Callaway Plant, Unit 1, Callaway County, Missouri

Date of application for amendment: September 8, 2000.

Brief description of amendment: The amendment revises the Callaway Technical Specifications (TS) to annotate the frequency for Surveillance Requirement (SR) 3.5.2.5 that verification of the automatic closure function of the residual heat removal pump suction Valve BNHV8812A shall be performed prior to startup from the first shutdown to Mode 5 (cold shutdown) occurring after September 8, 2000, but no later than June 1, 2001. The next refueling outage is scheduled for April 2001. This amendment defers the test of the automatic closure function until the next plant shut down to cold shutdown.

Date of issuance: October 6, 2000.

Effective date: October 6, 2000, to be implemented within 30 days from the date of issuance.

Amendment No.: 140.

Facility Operating License No. NPF–30: The amendment revised the Technical Specifications.

Public comments requested as to proposed no significant hazards consideration: Yes (65 FR 56943 dated September 20, 2000). The notice provided an opportunity to submit comments on the Commission's proposed no significant hazards consideration determination. No comments have been received. The notice also provided for an opportunity to request a hearing by October 20, 2000, but indicated that if the Commission makes a final no significant hazards consideration determination any such hearing would take place after issuance of the amendment.

The Commission's related evaluation of the amendment, finding of exigent circumstances, and final determination of no significant hazards consideration are contained in a Safety Evaluation dated October 6, 2000.

Attorney for licensee: John O'Neill, Esq., Shaw, Pittman, Potts & Trowbridge, 2300 N Street, NW., Washington, DC 20037.

NRC Section Chief: Stephen Dembek.

Dated at Rockville, Maryland, this 25th day of October 2000.

For the Nuclear Regulatory Commission.

John A. Zwolinski,

Director, Division of Licensing Project Management, Office of Nuclear Reactor Regulation.

[FR Doc. 00–27938 Filed 10–31–00; 8:45 am]

BILLING CODE 7590–01–P

SECURITIES AND EXCHANGE COMMISSION

[Rel. No. IC–24697; 812–11786]

PMC Capital, Inc., et al.; Notice of Application

October 25, 2000.

AGENCY: Securities and Exchange Commission (''Commission'' or ''SEC'').

ACTION: Notice of application for an order under sections 6(c) and 57(c) of the Investment Company Act of 1940 (the ''Act'') for an exemption from sections 57(a)(1) and 57(a)(2) of the Act, and under section 57(i) of the Act and rule 17d–1 under the Act authorizing certain joint transactions otherwise prohibited by section 57(a)(4) of the Act.

SUMMARY OF APPLICATION: Applicants request an order that would permit (1) a business development company (''BDC'') to engage in a loan origination agreement with an affiliated real estate investment trust, (2) investment management agreements between subsidiaries of the BDC and the real estate investment trust, and (3) the establishment of special purpose entities owned by the BDC and the real estate investment trust to engage in joint loan securitizations. The requested order would supersede an existing order.

APPLICANTS: PMC Capital, Inc. (''PMC''), PMC Commercial Trust (the ''REIT''), PMC Advisers, Ltd. (''Advisers''), and PMC Asset Management, Inc. (''Managers'').

FILING DATES: The application was filed on September 9, 1999 and amended on March 29, 2000 and October 24, 2000.

HEARING OR NOTIFICATION OF HEARING: An order granting the application will be issued unless the SEC orders a hearing. Interested persons may request a hearing by writing to the SEC's Secretary and serving applicants with a copy of the request, personally or by mail. Hearing requests should be received by the SEC by 5:30 p.m. on November 20, 2000, and should be accompanied by proof of service on applicants, in the form of an affidavit, or, for lawyers, a certificate of service. Hearing requests should state the nature of the writer's interest, the reason for the request, and the issues contested. Persons may request notification of a hearing by writing to the SEC's Secretary.

ADDRESSES: Secretary, SEC, 450 Fifth Street, N.W., Washington, D.C. 20549. Applicants, 18111 Preston Road, Suite 600, Dallas, Texas 75252.

FOR FURTHER INFORMATION CONTACT: Marilyn Mann, Senior Counsel, at (202) 942–0582, or Mary Kay Frech, Branch Chief, at (202) 942–0564 (Division of Investment Management, Office of Investment Company Regulation).

SUPPLEMENTARY INFORMATION: The following is a summary of the application. The complete application may be obtained for a fee from the SEC's Public Reference Branch, 450 5th Street, N.W., Washington D.C. 20549–0102 (telephone (202) 942–8090).

Applicants' Representations

1. PMC, a Florida corporation, is a closed-end diversified management investment company. On June 7, 1994, PMC filed notification of its election to operate as a BDC. PMC provides early stage financing and makes available significant managerial assistance to small businesses and receives interest income, loan servicing and other fees

generated by loans that it originates. PMC makes loans to small businesses either directly or through three subsidiaries, each of which is licensed and regulated by the Small Business Administration (''SBA'') and each of which is registered under the Act as a closed-end, diversified management investment company (the ''SBA Subsidiaries''). PMC currently has a seven-member board of directors, four of whom are not interested persons of PMC (''Independent Directors''). The four Independent Directors of PMC have no financial interest in the REIT. PMC and its SBA Subsidiaries do not have external investment advisers.

2. The REIT, formed in June 1993, is a Texas real estate investment trust whose common shares of beneficial interest are traded on the American Stock Exchange. The REIT was formed to take advantage of certain loan origination opportunities that PMC was unable to pursue because, among other things, many of its customers grew to exceed the limitations applicable to the SBA program or potential new borrowers were interested in loans of a size or type that did not meet the SBA criteria, and leverage restrictions applicable to PMC precluded it from borrowing enough additional capital to satisfy loan demand.

3. To mitigate against potential conflicts of interest between PMC and the REIT, PMC and the REIT entered into a loan origination agreement to set forth specific objective criteria to be used to allocate loan origination opportunities between them. The agreement provides that PMC will continue to make loans through its investment company subsidiaries in accordance with the eligibility requirements of the SBA programs used by the subsidiaries. Pursuant to the loan origination agreement, the REIT makes loans primarily (a) to borrowers that exceed the eligibility requirements of the SBA programs used by PMC, (b) in excess of $1,100,000, or (c) that do not conform to PMC's fundamental policies. In 1993, PMC obtained an order under the Act (the ''1993 Order'')[1] that permitted (a) PMC to own PMC Advisers, Inc., an investment adviser registered under the Investment Advisers Act of 1940 (the ''Advisers Act''); (b) PMC Advisers, Inc. to enter into an investment management agreement with the REIT; and (c) PMC and the REIT to enter into the loan origination agreement.

4. Advisers is the successor-in-interest by merger to PMC Advisers, Inc. Advisers is an indirect, wholly owned subsidiary of PMC, and Managers is a direct, wholly owned subsidiary of Advisers. Advisers presently provides services to the REIT with respect to the REIT's ownership of commercial real estate properties. Managers presently provides services to the REIT with respect to the REIT's loan origination activities. Advisers and Managers pay all of their net income to PMC in the form of dividends or partnership distributions. The executive management teams of the REIT, PMC, Advisers and Managers are comprised of the same individuals.

5. PMC and the REIT propose to enter into arrangements to generate working capital from time to time by jointly selling through securitization transactions portions of their respective loan portfolios. At such time as PMC and the REIT have originated a sufficient amount of loans to securitize on a cost-effective basis, PMC and the REIT propose to form a jointly owned special purpose entity (''SPE''). PMC and the REIT will each transfer ownership of the loans to the SPE in exchange for cash and an equity interest in the SPE based upon the relative outstanding principal balance of the loans that each contributes to the SPE. As the equity owners of the SPE, each of PMC and the REIT will retain the residual interest in the specific loans it transfers to the SPE to the extent any loans remain following repayment in full of the securities issued by the SPE.

6. Each SPE will be a limited partnership, limited liability company, trust or some other type of entity the form of which will be determined at the time of each transaction. Each SPE will be a passive, special purpose bankruptcy-remote entity and its organizational documents will expressly limit its activities to owning and holding the loans, issuing debt securities and other activities that are reasonably related thereto. Each SPE will rely on rule 3a–7 under the Act for an exemption from regulation under the Act. Each of PMC and the REIT will continue to service the loans that it transfers to the SPE pursuant to a servicing agreement that will govern the servicing of the loans and any other loan related property owned by the SPE. The SPE will pay PMC and the REIT a servicing fee for servicing the loans transferred to the SPE, which will be equal to the servicing fee that each would receive in a transaction in which the other was not a participant.

7. PMC and the REIT do not anticipate that they will necessarily transfer the same amount of loans to the SPE in connection with any particular transaction. However, the rights and obligations (other than any rights or obligations based solely on each entity's percentage ownership interest in the SPE) of each of PMC and the REIT under the transaction documents will be identical. To ensure that neither PMC nor the REIT is disadvantaged relative to the other with respect to the purchase price it receives upon the transfer of the loans to the SPE, the relative ownership interests of PMC and the REIT in the SPE and the amount of net proceeds each receives for the loans it transfers to the SPE will be based on the aggregate outstanding principal balance of the loans each such party transfers to the SPE without regard to the interest rates on such loans. Thereafter, to ensure that PMC and the REIT each benefit from the value of the loans it transfers to the SPE, all subsequent distributions to be made to PMC and the REIT under the securitization documents will be allocated proportionately based upon the relationship that the amount of the funds available for distribution to PMC and the REIT that is attributable to the loans (including the interest earned thereon) that were transferred to the SPE by such party bears to the total amount of funds then available for distribution to PMC and the REIT. Accordingly, the distributions each of PMC and the REIT receives will be based upon the performance of the loans that it transfers to the SPE.

8. PMC and the REIT will be required to pay certain expenses (including accounting, legal, investment banking, rating agency, printing, filing, recording and other expenses) incurred in connection with the issuance of securities by the SPE. They will each pay their portion of such expenses in accordance with their respective ownership interests in the SPE.

9. The SPEs will issue debt securities (the ''SPE Debt Securities'') to investors in private placement transactions exempt from registration under section 4(2) of the Securities Act of 1933 (the ''Securities Act''). The senior class of the SPE Debt Securities will be rated by a nationally recognized rating agency in one of its two highest rating categories. The indebtedness evidenced by the SPE Debt Securities will be secured by a security interest in the loans and will be over-collateralized as the aggregate outstanding principal balance of the loans securing the SPE Debt Securities will exceed the principal amount of the

[1] PMC Capital, Inc., Investment Company Act Release Nos. 19823 (Oct. 29, 1993) (notice) and 19895 (Nov. 23, 1993) (order). The other parties to the order were PMC Advisers, Inc., the REIT, Andrew S. Rosemore and Lance B. Rosemore. Lance B. Rosemore and Andrew S. Rosemore were applicants because at the time the 1993 Order was issued, they owned all of the issued and outstanding beneficial interests in the REIT. The REIT is now a publicly traded company.

SPE Debt Securities that will be issued by the SPE. The indebtedness evidenced by the SPE Debt Securities will also be secured by certain amounts that the SPE will be required to deposit in a reserve account maintained with the trustee under the indenture pursuant to which the SPE Debt Securities will be issued. The SPE will issue the SPE Debt Securities on a non-recourse basis and accordingly, neither PMC nor the REIT will have any liability or obligation for repayment of the SPE Debt Securities. The SPE will make payments of principal and interest on the SPE Debt Securities issued by the SPE from the payments of principal and interest received by the SPE on the loans securing the SPE Debt Securities. In the event that on any payment date the payments of principal and interest received by the SPE are insufficient to make the payments required to be paid to the holders of SPE Debt Securities on such date, amounts on deposit in the reserve account will be utilized to make the payments to the holders of SPE Debt Securities. To the extent amounts on deposit in the reserve account are insufficient to make the payments required to be paid to the holders of SPE Debt Securities on such date, the loans comprising the over-collateralization amount will provide excess collateral that will be available to the holders of SPE Debt Securities.

10. Applicants state that, historically, PMC's primary sources of capital and liquidity have been debentures issued through programs of the SBA, private and public issuances of common stock, the private issuance of senior unsecured medium term notes and the utilization of its short-term, unsecured revolving credit facility. Due to changes in certain SBA programs during the past three years that have increased the cost of SBA debentures, PMC has utilized other more cost-effective sources of funds to finance and expand its loan portfolio. PMC has been able to generate cost-effective growth in its investment portfolio through the sale from time to time of a portion of its loan portfolio through securitization transactions. These loan sales accomplished through securitization transactions have enabled PMC to generate working capital at rates generally better than available through the issuance of SBA debentures under the terms recently in existence. From time to time during the past four years the REIT has also raised working capital through the sale of portions of its loan portfolio through securitization transactions. Applicants contend that PMC and the REIT could each utilize the securitization process more effectively on a combined basis.

11. Applicants state that the proposed transactions would enable PMC and the REIT to accumulate larger, more diversified loan portfolios and thereby achieve larger asset-backed securities offerings. Geographic and borrower diversity in the loan portfolio reduces the risk associated with the securities to be issued by the SPE and is therefore fundamental to and may benefit the rating process. Applicants state that more widely diversified loan portfolios will improve their ability to obtain a rating in one of the two highest ratings categories from a nationally recognized rating agency, which will result in a lower interest rate on the SPE Debt Securities. Applicants state that increasing the size of the securitization transaction should not increase substantially the associated transaction costs and should therefore significantly reduce the transaction costs that would otherwise be paid by each of PMC and the REIT in connection with a securitization transaction conducted on an individual basis.

Applicants' Legal Analysis

1. Applicants request an order under sections 6(c) and 57(c) of the Act granting an exemption from sections 57(a)(1) and 57(a)(2) of the Act, and under section 57(i) of the Act and rule 17d–1 under the Act authorizing certain joint transactions otherwise prohibited by section 57(a)(4) of the Act. The requested order will supercede the 1993 Order.

Section 57(a)(1) and 57(a)(2)

2. Section 57(a)(1) of the Act provides that it shall be unlawful for any person related to a BDC in the manner specified in section 57(b) of the Act, acting as principal, knowingly to sell any security or other property to the BDC or to any company controlled by the BDC, unless the sale involves solely (a) securities of which the buyer is the issuer, or (b) securities of which the seller is the issuer and which are part of a general offering to the holders of a class of its securities. Section 57(a)(2) provides that it shall be unlawful for any person related to a BDC in the manner specified in section 57(b), acting as principal, knowingly to purchase from the BDC or from any company controlled by the BDC, any security or other property (except securities of which the seller is the issuer).

3. Section 57(b) provides, among other things, that section 57(a) shall apply to any person directly or indirectly controlling, controlled by, or under common control with, a BDC. Under section 2(a)(9) of the Act, a control relationship is presumed to exist if a person, either directly or through one or more controlled companies, is the beneficial owner of more than 25% of a company's outstanding voting securities. Section 57(c) of the Act provides that a person may file with the Commission an application for an order exempting a proposed transaction from sections 57(a)(1) or 57(a)(2). The Commission shall grant the application if (a) the terms of the proposed transaction, including the consideration to be paid or received, are reasonable and fair and do not involve overreaching of the BDC or its shareholders on the part of any person concerned, (b) the proposed transaction is consistent with the policy of the BDC as recited in the filings made by the company under the Securities Act, its registration statement and reports filed under the Securities Exchange Act of 1934 (the ''Exchange Act''), and its reports to shareholders, and (c) the proposed transaction is consistent with the general purposes of the Act.

4. Section 6(c) of the Act provides that the Commission may exempt any person, security, or transaction, or any class of persons, securities, or transactions, if and to the extent that such exemption is necessary or appropriate in the public interest and consistent with the protection of investors and the purposes fairly intended by the policy and provisions of the Act.

5. PMC will own more than 25% of the outstanding voting securities of an SPE and thus will be deemed to control the SPE. Section 57(a) thus applies to transactions between PMC and an SPE. The proposed securitization transactions contemplate that PMC and the REIT will each transfer loans to the SPE in exchange for cash and an equity interest in the SPE. The transfer of the equity interests by the SPE to PMC constitutes the sale of a security to a BDC and is therefore prohibited by section 57(a)(1). In addition, the acquisition of loans by an SPE from PMC will constitute the purchase of property from a BDC and is therefore prohibited by section 57(a)(2).

6. Applicants believe that the proposed transactions satisfy the standards for relief set forth in sections 57(c) and 6(c). Applicants state that conditions 8 and 9 to the requested relief would assure that the consideration to be paid or received is reasonable and fair and would not involved overreaching of the BDC or its shareholders on the part of any person concerned.

7. Applicants state that the proposed transactions are consistent with the policies of PMC as set forth in its public filings and reports to shareholders. Applicants therefore believe that the requested relief is appropriate in the public interest and consistent with the protection of investors and the policies and provisions of the Act.

Section 57(a)(4)

8. Section 57(a)(4) provides that it shall be unlawful for any person related to a BDC in the manner specified in section 57(b) of the Act, acting as principal, knowingly to effect any transaction in which the BDC or a company controlled by the BDC is a joint or a joint and several participant with such person in contravention of Commission rules adopted for the purpose of limiting or preventing participation by the BDC or controlled company on a basis less advantageous than that of such person.

9. Section 57(i) of the Act provides that, until the Commission prescribes rules under sections 57(a) and 57(d), the Commission's rules under sections 17(a) and 17(d) of the Act applicable to registered closed-end investment companies shall be deemed to apply to sections 57(a) and 57(d) of the Act. Because the Commission has not adopted any rules under section 57(a)(4), rule 17d–1 applies.

10. Rule 17d–1 under the Act generally prohibits affiliated persons of an investment company from entering into joint transactions with the company without prior Commission authorization. In passing upon applications under rule 17d–1, the Commission considers whether the participation by the BDC in the joint transaction is consistent with the provisions, policies, and purposes of the Act and the extent to which such participation is on a basis different from or less advantageous than that of other participants.

11. The REIT is advised by Advisers and Managers and thus could be deemed to be controlled by Advisers and Managers. Advisers and Managers are wholly owned subsidiaries of PMC and thus are persons controlled by PMC. The REIT is thus indirectly controlled by PMC. The REIT is prohibited from entering into joint transactions with PMC absent an exemptive order.

12. The proposed joint securitizations will be joint transactions involving PMC and the REIT. Applicants believe that the proposed transactions are consistent with the provisions, policies and purposes of the Act and that participation of PMC in the proposed transactions will not be on a basis less advantageous than that on the REIT. The directors of PMC, including a ''required majority'' of the directors as defined in section 57(o), will determine that the terms of the transactions, including the consideration to be paid, are reasonable and fair. The terms of each joint securitization will be the same for PMC and the REIT. Applicants contend that sufficient safeguards are in place through the underwriting and ratings processes to prevent the REIT or PMC from transferring disproportionately inferior credit quality loans to an SPE. In addition, the REIT will make certain representations relating to the credit quality of the loans it transfers as described in condition B.3.

13. A ''required majority,'' as defined in section 57(o) of the Act, of the directors of PMC will be required to make a determination in connection with any proposed securitization transaction that the loans transferred to the SPE by PMC could not have obtained a higher credit rating in a transaction not involving the participation of the REIT. To assist the directors of PMC in making this determinations, the directors will be provided with the same extensive an detailed loan and credit information that is provided to a rating agency, including information about the loan origination operations of PMC and REIT, the credit underwriting criteria utilized in originating the loans, historical delinquency and collection information, and loan loss and recovery histories. This information will provide a detailed analysis of the loan portfolio characteristics, including loan concentration by state, franchisor, and other pertinent characteristics of the loan portfolio. The board of directors will also be provided sample marketing information, delinquency and problem loan reports and such other due diligence reports and information as the rating agencies utilize in rating any such transaction. Information provided to PMC's board of directors will also include an analysis comparing the PMC loan pool to the loan pool to be transferred to the SPE by the REIT. Finally, PMC will provide its board of directors with an executive summary of each loan included in the PMC pool and each loan included in the REIT pool on an individual pool basis, which will contain detailed information about each loan, including the property type, date of loan origination, original loan principal amount, outstanding principal balance, current interest rate, maturity date, delinquency history, amortization period, original and current loan-to-value ratios, debt-service-coverage ratio and property location.

14. Applicants state that, in the unlikely event that the credit quality of the loans conveyed by the REIT or PMC is significantly disproportionately lower than the credit quality of the loans conveyed by the other party, the residual interest of the party contributing the higher quality loans could be disproportionately impacted. To protect the party transferring a higher quality loan portfolio against this possibility, each transaction will be structured so that all distributions to PMC and the REIT under the documents will be based on the performance of the loans transferred by PMC or the REIT, as the case may be. Either the organizational documents of the SPE and/or a separate agreement between PMC and the REIT will provide that any and all amounts distributable to PMC and the REIT in respect of each party's residual interest in its loans will be determined pursuant to a percentage allocation, the numerator of which is the amount of funds available for distribution that is attributable to the loans transferred by such party to the SPE and the denominator of which is the total funds then available for distribution to PMC and/or the REIT. Each party will also agree to reimburse the other in the unlikely event such other party's residual interest in the loans it transferred to the SPE is disproportionately impacted as a result of the non-performance of the loans transferred to the SPE by such party.

15. Applicants state that a particular securitization transaction could also potentially be less advantageous to PMC or the REIT if one of the parties commits an act or omission that subjects that other to liability. PMC and the REIT will each execute a cross-indemnity agreement to protect the other party against the risk.

16. Applicants also seek an order under section 57(i) and rule 17d–1 superseding the 1993 Order which permits the loan origination agreement between PMC and the REIT and investment management agreements between Advisers and the REIT and Managers and the REIT.

Applicants' Conditions

Applicants agree that any order granting the requested relief will be subject to the following conditions:

A. Investment Advisory and Management Arrangements

1. PMC's board of directors, including a ''required majority'' or the directors as defined in section 57(o) of the Act, will review at least annually the relationship

among (a) Advisers, the REIT and their affiliated persons and (b) Managers, the REIT and their affiliated persons, to determine whether the benefits derived by PMC and its shareholders warrant the continuation of the advisory relationships, including, but not limited to, the advisory agreement between Managers and the REIT and the management agreement between Advisers and the REIT and, if appropriate, will approve (by a vote of a majority of the directors of PMC, including the ''required majority'') at least annually such continuation.

2. A loan origination agreement has been entered into between PMC and the REIT to set forth specific objective criteria, as described in the application, which is utilized by Managers to allocate loan origination opportunities. Any amendments or modifications to the loan origination agreement will be approved by PMC's board of directors, including the ''required majority.''

3. The minutes of the meetings of PMC's board regarding the relationships among Managers, the REIT and their affiliated persons, including consideration of the advisory agreement between Managers and the REIT, and among Advisers, the REIT and their affiliated persons, including consideration of the management agreement between Advisers and the REIT, and the loan origination agreement or any amendments or modifications thereto, will reflect in detail a description of the board's deliberations, its findings, the information or materials upon which its findings were based, and the reasons for the directors' determination (a) that the relationships among Managers, the REIT and their affiliated persons, including the investment advisory agreement between Managers and the REIT, (b) that the relationship among Advisers, the REIT and their affiliated persons, including the management agreement between Advisers and the REIT, or (c) the loan origination agreement and any amendments or modifications thereto, as the case may be, is in the best interests of both PMC and its shareholders.

4. PMC will, without prejudice to the rights of its board of directors to dispose of PMC's interests in Advisers or Managers in their respective entireties, at all times own directly or indirectly beneficially and of record all of the issued and outstanding shares of capital stock or partnership interests of Advisers and Managers, as the case may be, and will cause Advisers and Managers not to issue any authorized but unissued shares of its capital stock or partnership interests to any person other than PMC or a wholly-owned subsidiary of PMC.

5. A majority of the directors of PMC, Advisers and Managers will not have any financial interest in or be ''interested persons'' of the REIT, as if the REIT were an investment company under section 2(a)(19)(A).

B. Joint Securitization Transactions

1. (a) The directors of PMC will receive written information concerning all joint securitization opportunities. The directors may request such additional information as they deem necessary to the exercise of their reasonable business judgment, and they will also employ such experts, including lawyers and accountants, as they deem appropriate to the reasonable exercise of this oversight function. PMC will engage in a joint securitization with the REIT only if a ''required majority'' of the directors of PMC conclude, prior to the transaction, that:

(i) The terms of the transaction, including the consideration to be paid, are reasonable and fair to the shareholders of PMC and do not involve overreaching of PMC on the part of any person concerned;

(ii) The transaction is consistent with the interests of the shareholders of PMC and is consistent with PMC's investment objectives and policies as recited in filings made by PMC under the Securities Act, as amended, its registration statement and reports filed under the Exchange Act and its reports to shareholders; and

(iii) Participation in the transaction by the REIT would not disadvantage PMC, and that participation by PMC would not be on a basis different from or less advantageous than that of the REIT.

(b) PMC has the right to decline to participate in any joint securitization opportunity.

2. The directors of PMC will be provided with a detailed credit rating analysis of each pool of loans to be contributed by PMC and the REIT in connection with any proposed joint securitization transaction and the investment bankers of PMC will provide a detailed presentation to PMC's directors analyzing each pool of loans on an individual pool basis. If the ''required majority'' of directors of PMC determine that the loans contributed by the REIT are of an inferior credit quality and would cause the transaction to receive a credit rating lower than the credit rating PMC's loans could otherwise obtain in a transaction not involving the REIT, PMC will not participate in the joint transaction.

3. The loans transferred by the REIT to the SPE will satisfy the following conditions: (a) Such loans will have a weighted average loan-to-value ratio at the time of loan origination that is less than the weighted average loan-to-value ratio at the time of loan origination of the loans that PMC transfers to the SPE; (b) such loans will have a weighted average loan-to-value ratio at the time of transfer that is less than the weighted average loan-to-value ratio of the loans that PMC transfers to the SPE; (c) no loan transferred by the REIT will be 30 days delinquent at the time of transfer; and (d) an environmental site assessment shall have been performed in connection with the origination of each such loan and to the REIT's knowledge, at the time of origination, the property securing each such loan was in material compliance with all applicable federal, state and local environmental laws and regulations.

4. Records required by section 57(f)(3) of the Act will be maintained as if each of the transactions permitted under these conditions were approved by the ''required majority'' of PMC's directors under section 57(f).

5. The senior class of each asset-backed securities offering issued by an SPE jointly owned by PMC and the REIT will be rated in one of the two highest ratings categories by a NRSRO, as defined in rule 2a–7 under the Act.

6. Loans originated by the REIT will not be eligible to participate in any joint transaction unless they were underwritten by the REIT utilizing the same credit quality and underwriting criteria as that utilized by PMC with respect to any loans it originates and transfers to an SPE.

7. Neither PMC nor the REIT will utilize any selection criteria with respect to the loans it selects to transfer to any SPE that would result in such loans being of a quality generally inferior to that of all of its loans taken as a whole.

8. On the date of the transfer, each of PMC and the REIT will receive net proceeds in respect of the loans it transfers to the SPE in an amount equal to the aggregate outstanding principal balance of the loans it transferred to the SPE less its pro rata portion (based on the ratio of the aggregate principal balance of the loans its transfers to the total aggregate principal balance of all loans transferred by PMC and the REIT to the SPE) of any trustee fees, rating agency fees, other transaction costs and any initial reserve account deposits and required over-collateralization amounts.

9. Following the initial distribution of net proceeds to PMC and the REIT, all subsequent distributions to PMC and/or the REIT made in respect of their respective residual interests in the loans

will be made pro rata to PMC and/or the REIT based on the percentage of the total amount available for distribution to PMC and/or the REIT that is attributable to the loans each such party transferred to the SPE.

10. PMC and the REIT will agree pursuant to the organizational documents of the SPE or a separate agreement to reimburse the other party to the extent that such other party's residual interest in the loans it transferred to the SPE is disproportionately impacted as a result of the non-performance of the loans transferred to the SPE by PMC or the REIT, as the case may be.

11. Each of PMC and the REIT will continue to service the loans it transfers to the SPE and shall receive the servicing fee payable in respect thereof for so long as PMC and the REIT service the loans in accordance with the terms of the securitization documents.

12. PMC and the REIT will provide quarterly servicing reports to the board of directors of PMC and the trust managers of the REIT. Such reports shall show in reasonable detail all collections received from the loans transferred by each of PMC and the REIT as well as all deposits, payments and distributions made from the collection amounts and the reserve account. Such servicing reports shall also provide information on the status of any delinquent loans and any loan that becomes a charged-off loan.

13. PMC and the REIT will provide to the board of directors of PMC and the trust managers of the REIT notice of the occurrence of any event, non-payment or loan loss with respect to any loan transferred to the SPE by one party that reduces the reserve account or increases the minimum amount required to be on deposit in the reserve account or causes the other party not to receive the distribution amount that it would have otherwise been entitled to receive if such event or loss had not occurred (each a ''Reimbursement Trigger Event'').

14. PMC and the REIT will provide the board of directors of PMC and the trust managers of the REIT with notice when all amounts owing to PMC or the REIT, as the case may be, in respect of a Reimbursement Trigger Event have been paid in full by the other party.

15. The expenses associated with each joint securitization transaction will be shared by PMC and the REIT in proportion to their ownership interests in the SPE.

16. The terms and conditions of each joint securitization will be the same for PMC and the REIT.

17. The Independent Directors will review quarterly all relevant information concerning joint securitization transactions created during the preceding quarter to determine whether the conditions set forth in the application were compiled with.

For the Commission, by the Division of Investment Management, pursuant to delegated authority.

Margaret H. McFarland,

Deputy Secretary.

[FR Doc. 00–27976 Filed 10–31–00; 8:45 am]

BILLING CODE 8010–01–M

SECURITIES AND EXCHANGE COMMISSION

[Release No. 35–27261]

Filings Under the Public Utility Holding Company Act of 1935, as Amended (''Act'')

October 25, 2000.

Notice is hereby given that the following filing(s) has/have been made with the Commission pursuant to provisions of the Act and rules promulgated under the Act. All interested persons are referred to the application(s) and/or declaration(s) for complete statement of the proposed transaction(s) summarized below. The application(s) and/or declaration(s) and any amendment(s) is/are available for public inspection through the Commission's Branch of Public Reference.

Interested persons wishing to comment or request a hearing on the application(s) and/or declaration(s) should submit their views in writing by November 20, 2000, to the Secretary, Securities and Exchange Commission, Washington, DC 20549–0609, and serve a copy on the relevant applicant(s) and/or declarant(s) at the address(es) specified below. Proof of service (by affidavit or, in the case of an attorney at law, by certificate) should be filed with the request. Any request for hearing should identify specifically the issues of facts or law that are disputed. A person who so requests will be notified of any hearing, if ordered, and will receive a copy of any notice or order issued in the matter. After November 20, 2000, the application(s) and/or declaration(s), as filed or as amended, may be granted and/or permitted to become effective.

Appalachian Power Company

[70–5503]

Appalachian Power Company (''Appalachian''), 40 Franklin Road, SW, Roanoke, Virginia 24011, an electric public-utility subsidiary company of American Electric Power Company, Inc., a registered holding company, has filed a post-effective amendment to its application-declaration under sections 9(a), 10 and 12(d) of the Act and rules 44 and 54 under the Act.

By order dated December 10, 1974 (HCAR No. 18703), the Commission authorized Appalachian, among other things, to enter into an agreement of sale (''Agreement'') with the Industrial Development Authority of Russell County, Virginia (''Authority''), concerning the financing of pollution control facilities (''Facilities'') at Appalachian's Glen Lyn and Clinch River plants. Under the Agreement, the Authority may issue and sell its pollution control revenue bonds (''Revenue Bonds'') or pollution control refunding bonds (''Refunding Bonds'' and, together with Revenue Bonds, ''Bonds''), in one or more series, and deposit the proceeds with the trustee (''Trustee'') under an indenture (''Indenture'') entered into between the Authority and the Trustee. The Trustee applies the proceeds to the payment of the costs of construction of the Facilities or, in the case of proceeds from the sale of the Refunding Bonds, to the payment of principal, premium (if any) and/or interest on Bonds to be refunded.

The same order also authorized Appalachian to convey an undivided interest in a portion of the Facilities to the Authority, and to reacquire that interest under an installment sales arrangement (''Sales Agreement'') requiring Appalachian to pay as the purchase price semi-annual installments in an amount that, together with other funds held by the Trustee under the Indenture for that purpose, will enable the Authority to pay, when due, the interest and principal on the Bonds. The Authority has issued and sold eight series of Bonds in an aggregate principal amount of $116.24 million of which $37.0 million presently are outstanding.

The Authority now intends to issue and sell an additional series of bonds in the aggregate principal amount of up to $17.5 million (''Series I Refunding Bonds)'' the proceeds of which will be used to provide for the redemption on or prior to maturity of $17.5 million principal amount of the Series G Bonds of the Authority. It is contemplated that the Series I Refunding Bonds will be issued and secured under a supplemental indenture between the Authority and the Trustee. Appalachian proposes to enter into an amended Sales Agreement in connection with the Series I Refunding Bonds under essentially the same terms and

conditions of the original Sales Agreement.

It is contemplated that the series I Refunding Bonds will be sold under arrangements with a group of underwriters with such terms as shall be specified by Appalachian. The Series I Refunding Bonds shall have a stated maturity of no more than forty years, a fixed rate of interest that shall not exceed 8% per annum or an initial rate of interest by any fluctuating rate Bonds that shall not exceed 8%. If it is deemed advisable, the Series I Refunding Bonds may be provided some form of credit enhancement.

Appalachian Power company

[70–6171]

Appalachian Power company (''Appalachian''), 40 Franklin Road, SW., Roanoke, Virginia 24011, an electric public-utility subsidiary company of American Electric Power Company, Inc., a registered holding company, has filed a post-effective amendment to its application-declaration under sections 9(a), 10 and 12(d) of the Act and rules 44 and 54 under the Act.

By order dated June 30, 1978 (HCAR No. 20610) (''Order''), Appalachian was authorized, among other things, to enter into an agreement of sale (''Agreement'') with Mason County, West Virginia (''County''). The Agreement provided for the construction, installation, financing and sale of certain pollution control facilities (''Facilities'') at Appalachian's Mountaineer and Philip Sporn Units 1 and 3. Under the Agreement, the County may issue and sell its pollution control revenue bonds (''Revenue Bonds'') or pollution control refunding bonds (''Refunding Bonds'' and, together with Revenue Bonds, ''Bonds''), in one or more series, and deposit the proceeds with the trustee (''Trustee'') under an indenture (''Indenture'') entered into between the County and the Trustee. The proceeds are applied by the Trustee to the payment of the costs of construction of the Facilities, or in the case of proceeds from the sale of Refunding Bonds, to the payment of the principal, premium (if any) and/or interest on Bonds to be refunded.

The Order also authorized Appalachian to convey an undivided interest in a portion of the Facilities to the County, and to reacquire that interest under an installment sales arrangement (''Sales Agreement'') requiring Appalachian to pay as the purchase price semi-annual installments in an amount that, together with other funds held by the Trustee under the Indenture for that purpose, will enable the County to pay, when due, the interest and principal on the Bonds. The County has issued and sold eight series of Bonds in an aggregate principal amount of $350 million of which $130 million presently are outstanding.

It is now proposed that the County will issue and sell an additional series of Bonds in the aggregate principal amount of up to $10 million (''Series L Refunding Bonds'') the proceeds of which will be used to provide for the redemption on or prior to maturity of $10 million principal amount of the Series H Bonds of the County. It is contemplated that the Series L Refunding Bonds will be issued and secured under a supplemental indenture between the County and the Trustee. Appalachian proposes to enter into an amended Sales Agreement in connection with the Series L Refunding under essentially the same terms and conditions of the original Sales Agreement.

It is contemplated that the Series L Refunding Bonds will be sold under arrangements with a group of underwriters with such terms as shall be specified by Appalachian. The Series L Refunding Bonds shall have a stated maturity of no more than forty years, a fixed rate of interest that shall not exceed 8% per annum or an initial rate of interest by any fluctuating rate Bonds that shall not exceed 8%. If it is deemed advisable, the Series L Refunding Bonds may be provided some form of credit enhancement.

The Southern Company, et al.

[70–9701]

The Southern Company (''Southern''), a registered holding company, 270 Peachtree Street, N.W., Atlanta, Georgia 30303, and its public-utility subsidiary companies, Alabama Power Company (''Alabama''), 600 North 18th Street, Birmingham, Alabama 35291, Georgia Power Company (''Georgia''), 241 Ralph McGill Boulevard, N.E., Atlanta, Georgia 30308, Gulf Power Company (''Gulf''), One Energy Place, Pensacola, Florida 32520, Mississippi Power Company (''Mississippi''), 2992 West Beach, Gulfport, Mississippi 39501, Savannah Electric and Power Company (''Savannah''), 600 East Bay Street, Savannah, Georgia 31401, and Southern Electric Generating Company (''SEGCO''),[1] 600 North 18th Street, Birmingham, Alabama 35291 (collectively, ''Applicants''), have filed an application-declaration under sections 6(a), 7, 9(a), 10, 12(b), 12(c), 12(d) and 13(b) of the Act and rules 43, 45, 46, 53, 54, 90 and 91 under the Act.

Applicants seek authority for Southern to organize a new subsidiary company (''NewCo''). Applicants propose that NewCo will undertake the construction and ownership of certain electric power generation facilities interconnected to the transmission systems of the Operating Companies, or to transmission systems interconnected to those of the Operating Companies designed for serving the power requirements of the Operating Companies and of other power purchasers in the region. In addition, Applicants seek authority for NewCo to invest in exempt wholesale generators (''EWGs''), the generation of which may not be interconnected to transmission systems of the Operating Companies. Certain power generation owned by NewCo may be integrated into the power generation owned by the Operating Companies and operated on a central dispatch basis by Southern Company Services, Inc. (''Services'').

Applicants propose that Southern and the Operating Companies will transfer the following asset and types of assets (collectively, the ''Plant Sites and Generating Equipment'') to NewCo: Plant Dahlberg in Jackson County, Georgia; plants under construction and/or undeveloped plant sites prior to their becoming utility assets; and existing contracts for wholesale sales of electricity. Georgia is currently developing the Plant Dahlberg facility, an 800 MW simple-cycle natural gas peaking facility located north of Athens, Georgia. The facility will initially consist of ten combustion turbine generating units. Units 1–8 entered commercial operation during May through June, 2000. Units 9 and 10 are scheduled for commercial operation in the spring of 2001. Primary fuel for the units will be natural gas, with No. 2 fuel oil as a backup. The facility is interconnected to the Georgia Integrated Transmission System and the Southern electrical control area via a 230 kV transmission line and is centrally dispatched as part of the Southern control area. Plant Dahlberg will be transferred at the book cost of Georgia, which is estimated to be $275 million, upon completion of Units 9 and 10 in the spring of 2001.

The Plant Sites and Generating Equipment will be transferred or sold to NewCo in an amount equal to the net book value. NewCo will pay cash and/or issue promissory notes, secured by purchase money mortgages on the Plant

[1] Alabama, Georgia, Gulf, Mississippi and Savannah are public-utility subsidiary companies of Southern. Alabama and Georgia each own 50% of the common stock of SEGCO and are each entitled to 50% of the output of SEGCO. Alabama, Georgia, Gulf, Mississippi, Savannah and SEGCO are referred to as ''Operating Companies.''

Sites and Generating Equipment, to the respective Operating Company. Promissory notes will only be issued to the Operating Companies for a term not to exceed five years and at interest rates equivalent to similar securities of a like maturity, provided that such rate of interest fully compensates the Operating Company for its cost of funds. After the transfer of the Plant Sites and Generating Equipment, NewCo will assume responsibility for the construction and ownership of the Plant Sites and Generating Equipment. NewCo will become an ''electric utility company'' as defined in section 2(a)(3) of the Act.

I. Financing Authority

Applicants propose to engage in the transactions described below from time to time, as applicable, through June 30, 2005.

A. Equity Funding, Guarantee and Parent Support Authority

Southern seeks financing authority to fund the development and growth of NewCo up to an aggregate amount not to exceed $1.7 billion. The financings will take the form of any combination of: (1) Purchases of or contributions in respect of limited liability company interests or other forms of equity interests; (2) open account advances without interest; (3) loans; and (4) guarantees (as described below) issued in support of securities and other obligations of NewCo. The proceeds of the financings will be used to finance the operations of NewCo including the acquisition, construction and operation of power generation facilities, fuel and power generation equipment procurement and storage, and energy-related activities, including those permitted under rule 58.

Southern and NewCo will maintain the equity component of NewCo's consolidated capitalization at or above 30%. Applicants propose that NewCo be permitted to maintain a common equity component less than 30% and request that the Commission reserve jurisdiction over transactions that will cause the common equity component of NewCo's consolidated capitalization to fall below 30%.

The loans from Southern will provide NewCo with liquidity to facilitate cash management. The loans will be at interest rates and maturities to provide a return to Southern of not less than its effective cost of capital, and will be of a term not to exceed two years.

Guarantees may be used as credit support for NewCo. Southern proposes to issue guarantees or provide other forms of credit support or enhancements (collectively, ''Guarantees'') to, or for the benefit of, NewCo. Guarantees will take the form of Southern agreeing to guarantee, to undertake reimbursement obligations, to assume liabilities or to assume other obligations with respect to, or to act as surety on, bonds, letters of credit, evidences of indebtedness, equity commitments, performance and other obligations undertaken by NewCo. The terms and conditions of the Guarantees will be established through arms-length negotiations based upon current market conditions. Any Guarantee issued will be without recourse to any of the Operating Companies.

B. NewCo Independent Financing

In connection with its daily operations, financing the acquisition, construction and operation of assets owned by it and its subsidiaries, and to achieve its business goals, NewCo proposes to issue securities up to an aggregate amount of $2.5 billion. This financing is currently expected to take, without limitation, the form of bank loans and/or bank credit support, project financing, lease or sale/leaseback transactions, commercial paper programs, debt secured by NewCo's assets or unsecured debt, notes, debentures, preferred securities, and other equity. In connection with any lease or sale/leaseback transaction, NewCo may transfer or sell utility assets to a third party. NewCo will lease the assets from the third party with an option to buy back the assets. Applicants request that the Commission reserve jurisdiction over the sale/leaseback of any utility assets.

In connection with the issuance of preferred securities, NewCo will organize a special purpose subsidiary (''SPS'') and might organize another special purpose subsidiary for the purpose of complying with applicable state law. A SPS will issue preferred securities to third parties and NewCo will acquire all of the common equity or general partnership interests of the SPS. NewCo will simultaneously issue debt securities to the SPS and may guarantee certain payments with respect to the preferred securities.

In connection with project financing of generating assets, NewCo may acquire securities or other interests in project subsidiaries. In addition, NewCo proposes to incur obligations in connection with the issuance and sale by public instrumentalities of one or more series of revenue bonds.

The interest rate or other distribution rate for NewCo's financings will reflect rates obtained by companies with comparable credit quality. Applicants state that the rate will not exceed the highest of the following rates: (1) 400 basis points over U.S. Treasury securities; (2) a gross spread over U.S. Treasury securities that is consistent with similar securities having comparable maturities; (3) 200 basis points over the prime rate; or (4) 350 basis points over the London Interbank Offered Rate.

NewCo requests authority for it and its subsidiaries (discussed below) to pay dividends to Southern out of capital or unearned surplus to the extent permitted by capitalization and without impairing the rights of the holder of outstanding securities. This will permit NewCo and its subsidiaries to avoid having excess unrestricted cash trapped in subsidiaries.

II. Proposed Service Agreements With Services and Operating Companies

It is proposed that personnel employed by Services, will provide a wide range of services on an as-needed basis under a service agreement (''Service Agreement'') to be entered into between NewCo and Services. It is also proposed that personnel employed by the Operating Companies will provide services to NewCo under Operating Agreements (the ''Operating Agreements'') between NewCo and each Operating Company or other arrangements.

The Service Agreement will take effect upon Commission approval and will be similar in all material respects to those service agreements which Services has signed with each of the Operating Companies. Under the proposed Service Agreement, Services will render to NewCo, at a cost computed in accordance with rules 90 and 91 under the Act and other applicable rules and regulations, various services including general executive and advisory services, power pool operations, general engineering, design engineering, purchasing, accounting, finance and treasury, taxes, insurance and pensions, corporate, rates, budgeting, public relations, employee relations, systems and procedures and other services with respect to business and operations. Services will account for, allocate and charge its costs of the services provided on a full cost reimbursement basis under a work order system consistent with the Uniform System of Accounts for Mutual and Subsidiary Service Companies.

The Operating Agreements will provide that each Operating Company will provide certain services relating to accounting matters and to the construction, operation, maintenance and rehabilitation of assets owned by

NewCo at cost to NewCo. NewCo will also determine from time to time that it is efficient and advantageous to have certain development activities performed by its own employees and/or by unaffiliated third parties. The arrangements with unaffiliated third parties will be on a fee-for-service negotiated basis at market rates.

III. Formation of EWG Subsidiaries of NewCo

NewCo proposes to acquire securities or interests in the business of one or more EWGs, as the term is defined in the Act (the ''Exempt Subsidiaries''), either directly or indirectly through project companies (''Intermediate Companies'').

Intermediate Companies will be special purpose subsidiaries formed to engage exclusively in activities to facilitate the consummation of investments in EWGs. They may also engage in development activities. Intermediate Companies may acquire interests in, finance the acquisition of and hold the securities of EWGs. Intermediate Companies will enhance the ability of NewCo to respond quickly to investment opportunities. An Intermediate Company may be organized at the time of the making of bids or proposals to acquire an interest in any EWG or at any time thereafter in order to facilitate the bidding and subsequent consummation of an acquisition of an interest in an EWG.

Applicants also propose that an Intermediate Company will issue equity securities and debt securities to persons other than NewCo or Southern (and with respect to which there will be no recourse to Southern), including banks, insurance companies and other financial institutions, exclusively for the purpose of financing (including any refinancing) investments in EWGs.

Applicants state that the Intermediate Companies will issue securities to Southern and/or NewCo, and Southern and/or NewCo will acquire the securities. The investment by Southern or NewCo in the Exempt Subsidiaries will take the form of capital stock or shares, debt securities, trust certificates, capital contributions, open account advances without interest and partnership interests or other equity or participation interests, bid bonds or other credit support to secure obligations incurred by NewCo and/or Intermediate Companies in connection with Exempt Subsidiary investments or of NewCo's undertaking to contribute equity to an Intermediate Company. Southern and NewCo propose, from time to time through June 30, 2005, to (1) guarantee the indebtedness or other obligations of one or more Exempt Subsidiaries; (2) assume the liabilities of one or more Exempt Subsidiaries; and/or (3) enter into guarantees and letters of credit reimbursement agreements in support of equity contribution obligations or otherwise in connection with project development activities for one or more Exempt Subsidiaries.

Investments will be made from Southern to NewCo and/or Intermediate Companies directly or indirectly. Any open account advance made by Southern will have a maturity of not more than one year.

Applicants propose for Southern to enter into reimbursement agreements with banks to support letters of credit delivered as security for Southern's or NewCo's equity contribution obligation to an Intermediate Company or otherwise in connection with an Intermediate Company's or Exempt Subsidiary's project development activities.

The investment in Intermediate Companies and Exempt Subsidiaries is included in the requested $4.2 billion total financing authority.

For the Commission, by the Division of Investment Management, under delegated authority.

Margaret H. McFarland,

Deputy Secretary.

[FR Doc. 00–27975 Filed 10–31–00; 8:45 am]

BILLING CODE 8010–01–M

SECURITIES AND EXCHANGE COMMISSION

[Release No. IC–24714; File No. 812–12054]

The Variable Annuity Life Insurance Company, et al.

October 26, 2000.

AGENCY: The Securities and Exchange Commission (''Commission'').

ACTION: Notice of application for an order pursuant to Section 26(b) of the Investment Company Act of 1940 (the ''Act'') approving certain substitutions of securities and an order of exemption pursuant to Section 17(b) of the Act from Section 17(a) of the Act.

SUMMARY OF APPLICATION: Applicants request an order to permit a unit investment trust to substitute (a) Shares of North American—Founders Large Cap Growth Fund for shares of Dreyfus Founders Growth Fund; (b) Shares of North American—American Century Income & Growth Fund for shares of Neuberger Berman Guardian Trust and for shares of Scudder Growth and Income Fund; (c) Shares of North American—Founders/T. Rowe Price Small Cap Fund for shares of T. Rowe Price Small-Cap Fund, Inc. and for shares of Dreyfus Variable Investment Fund Small Cap Portfolio (''Dreyfus VIF Small Cap''); (d) Shares of North American—American Century International Growth Fund for shares of Templeton International Securities Fund; (e) Shares of North American—AG Core Bond Fund for shares of American General Domestic Bond Fund; (f) Shares of North American—AG Moderate Growth Lifestyle Fund for shares of American General Balanced Fund; and (g) Shares of North American International Growth Fund for shares of American General International Value Fund. The shares are currently held by that unit investment trust to support certain deferred premium variable annuity contracts (the ''Contracts'').

APPLICANTS: The Variable Annuity Life Insurance Company (''VALIC''); VALIC Separate Account A (the ''Account''); North American Funds Variable Product Series I (''NAFV I'') and North American Funds Variable Product Series II (''NAFV II'') (VALIC and the Account are the ''Substitution Applicants''; VALIC, the Account, NAFV I and NAFV II are the ''Section 17 Applicants'').

FILING DATE: The application was filed on March 31, 2000; an amendment substantially conforming to this Notice will be filed during the pendencey of the Notice period.

HEARING OF NOTIFICATION OF HEARING: An order granting the application will be issued unless the Commission orders a hearing. Interested persons may request a hearing by writing to the Secretary of the Commission and serving Applicants with a copy of the request, personally or by mail. Hearing requests should be received by the Commission by 5:30 p.m. on November 16, 2000, and should be accompanied by proof of service on Applicants, in the form of an affidavit or, for lawyers, a certificate of service. Hearing requests should state the nature of the writer's interest, the reason for the request, and the issues contested. Persons may request notification of a hearing by writing to the Secretary of the Commission.

ADDRESSES: Secretary, Securities and Exchange Commission, 450 Fifth Street, NW., Washington, DC 20549–0609. Applicants: Nori Gabert, Esq., The Variable Annuity Life Insurance Company, 2929 Allen Parkway, Houston, Texas 77019, and David C. Mahaffey, Esq., Sullivan & Worcester LLP, 1025 Connecticut Avenue, NW., Washington, DC 20036.

FOR FURTHER INFORMATION CONTACT: Keith Carpenter, Branch Chief, or Rebecca A. Marquigny, Senior Counsel

at (202) 942–0670, Office of Insurance Products, Division of Investment Management.

SUPPLEMENTARY INFORMATION: The following is a summary of the application; the complete application may be obtained for a fee from the Public Reference Branch of the Commission, 450 Fifth Street, N.W., Washington, D.C. 20549 (tel. (202) 942–8090).

Applicant's Representations

1. VALIC is a stock life insurance company organized under the Texas Insurance Code. VALIC is an indirect wholly-owned subsidiary of American General Corporation.

2. The Account is registered under the Act as a unit investment trust (File No. 811–03240). The assets of the Account support certain Contracts, and interests in the Account offered through such Contracts have been registered under the Securities Act of 1933 (''1933 Act'') on Form N–4.

3. NAFV I and NAFV II are each registered under the Act as open-end management investment companies of the series type (File Nos. 811–03738 and 811–08789). Securities of NAFV I and NAFV II are also registered under the 1933 Act (File Nos. 2–83631 and 333–53589).

4. The Account currently has 53 sub-accounts, each of which reflects the investment performance of a series of NAFV I or NAFV II, or certain other registered management companies advised by advisers not affiliated with VALIC or the Account.

5. Under the Contracts, VALIC reserves the right to substitute shares of one fund for shares of another.

6. VALIC proposes, as applicable, to substitute (a) Shares of North American—Founders Large Cap Growth Fund for shares of Dreyfus Founders Growth Fund; (b) Shares of North American—American Century Income & Growth Fund for shares of Neuberger Berman Guardian Trust and for shares of Scudder Growth and Income Fund; (c) Shares of North American—Founders/T. Rowe Price Small Cap Fund for shares of T. Row Price Small-Cap Stock Fund, Inc. and for shares of Dreyfus VIF Small Cap; (d) Shares of North American—American Century International Growth Fund for shares of Templeton International Securities Fund; (e) Shares of North American—AG Core Bond Fund for shares of American General Domestic Bond Fund; (f) Shares of North American—AG Moderate Growth Lifestyle Fund for shares of American General Balanced Fund; and (g) Shares of North American International Growth Fund for shares of American General International Value Fund.

7. Except for North American—AG Core Bond Fund, North American—AG Moderate Growth Lifestyle Fund, and North American International Growth Fund, each of which is a series of NAFV II, none of the replacement funds has commenced operations. The Applicants have filed an amendment to the registration statement on Form N–1A of NAFV I to reflect the addition of the new funds (the ''New Funds''), which became effective on September 29, 2000.

8. Pursuant to an exemptive order issued to VALIC, NAFV II, and others, *VALIC et al.,* Inv. Co. Act Rel. No. 23429 (Sept. 9, 1998) (the ''Multi-Manager Order''), VALIC is authorized to enter into and amend sub-advisory agreements without shareholder approval under certain conditions.

9. The investment objectives, policies and restrictions of the replacement funds are in each case substantially similar to the investment objectives, policies and restrictions of the respective existing funds. The investment objectives of each existing and the corresponding replacement fund are set forth below:

Existing funds	Investment objective	Replacement funds	Investment objective
Dreyfus Founders Growth Fund	To seek long-term growth of capital. The fund seeks to attain its objective by investing a substantial portion of its assets in common stocks of well-established, high-quality growth companies.	North American-Founders Large Cap Growth Fund.	The same.
Neuberger Berman Guardian Trust	To seek long-term growth of capital; current income is a secondary goal. The fund invests mainly in common stocks of large capitalization companies.	North American-American Century Income & Growth Fund.	To seek dividend growth, current income, and capital appreciation by investing in common stocks.
Scudder Growth and Income Fund	To seek long-term growth of capital, current income and growth of income.	North American-American Century Income & Growth Fund.	To seek dividend growth, current income, and capital appreciation by investing in common stocks.
T. Rowe Price Small-Cap Stock Fund, Inc..	To seek long-term capital growth in investing primarily in stocks in small companies.	North American-Founders/T. Rowe Price Small Cap Fund.	To seek long-term capital growth by investing primarily in stocks of small companies.
Dreyfus VIF Small Cap	To maximize capital appreciation. The fund focuses on common stocks of small-cap companies with market capitalization of less than $1.5 billion.	North American-Founders/T. Rowe price Small Cap Fund.	To seek long-term capital growth by investing primarily in stocks of small companies.
Templeton International Securities Fund.	To seek long-term capital growth. The fund invests primarily in equity securities of companies outside the United States, including emerging markets.	North American-American Century International Growth Fund.	To seek capital growth by investing primarily in equity securities of companies in developed countries other than the United States.

Existing funds	Investment objective	Replacement funds	Investment objective
American General Domestic Bond Fund.	To seek the highest possible total return consistent with conservation of capital through investments primarily in investment grade fixed-income securities and other income producing, securities.	North American-AG Core Bond Fund.	To seek the highest possible total return consistent with conservation of capital through investments in medium to high-quality fixed-income securities.
American General Balanced Fund	To seek balanced accomplishment of (i) conservation of principal and (ii) long-term growth of capital and income through investment in fixed income and equity securities.	North American-AG Moderate Growth Lifestyle Fund.	To seek growth and current income through investments in other series of NAFV I and NAFV II.
American General International Value Fund.	To seek to provide growth of capital and future income through investments primarily in securities of non-U.S. issuers and securities whose principal markets are outside the United States.	North American International Growth Fund.	To seek to provide long-term capital appreciation by investing in equity securities of non-U.S. companies, the majority of which are in developed markets.

10. Applicants assert that the substitutions are expected to provide significant benefits to Contract owners, including improved selection of portfolio managers and simplification of fund offerings through elimination of overlapping offerings. At the same time, Contract owners will continue to be able to select among a large number of funds, with a full range of investment objectives, investment strategies, and managers.

11. The expenses of the existing funds and the pro forma expenses of the replacement funds are set forth below in the Appendix.

12. By supplements to the various prospectus for the Contracts and the Account, VALIC will notify all owners of the Contracts of its intention to take the necessary actions, including seeking the other requested by this Application, to substitute shares of the funds as described therein. The prospectus supplements for the Account will advise Contract owners that from the date of the supplement until the date of the proposed substitution, owners will be permitted to make transfers among sub-accounts as usual. The supplements will also inform Contract owners that VALIC will not exercise any rights reserved under any Contract to impose additional restrictions on transfers until at least 30 days after the proposed substitution.

13. Within five business days after the proposed substitutions, affected Contract owners will also be provided with a prospectus for the replacement funds.

14. The proposed substitutions will take place at relative net assert value with no change in the amount of any Contract owners's Contract value, cash value or death benefit or in the dollar value of his or her investment in any of the Accounts.

15. The process for accomplishing the transfer of assets from an existing fund to its respective replacement fund will be determined on a case-by-case basis. In certain cases, it is expected that the substitutions will be effected by redeeming shares of an existing fund for cash and using the cash to purchase shares of the replacement fund.

16. In certain other cases, it is expected that the substitutions will be effected by redeeming the shares of an existing fund in-kind; these assets will then be contributed in-kind to the corresponding replacement fund to purchase shares of that fund. All in-kind redemptions from an existing fund of which any of the Substitution Applicants is an affiliated person will be effected in accordance with the conditions set forth in the Commission's no-action letter issued to *Signature Financial Group, Inc.* (available Dec. 29, 1999). In-kind purchases of a replacement fund will be conducted as described in the Application.

17. Contract owners will not incur any fees or charges as a result of the substitutions, nor will their rights or VALIC's obligations under the Contracts be altered in any way. All expenses incurred in connection with the proposed substitutions, including brokerage, legal, accounting and other fees and expenses, will be paid by VALIC. In addition, the proposed substitutions will not impose any tax liability on Contract owners. The supplements will also inform Contract owners that VALIC will not exercise any rights reserved under any Contract to impose additional restrictions on transfers until at least 30 days after the proposed substitution.

18. In addition to the prospectus supplements distributed to owners of Contracts, within five business days after the proposed substitutions, any Contract owners who were affected by the proposed substitutions will be sent a written notice informing them that the proposed substitutions were carried out and that they may make one transfer of all Contract value or cash value under a Contract invested in each of the affected sub-accounts to other available sub-account(s) without regard to any limitations on transfers that would otherwise apply and without charge. The notice will also reiterate the fact that VALIC will not exercise any rights reserved by it under the Contracts to impose additional restrictions on transfers until at least 30 days after the proposed substitutions.

19. Before any of the New Funds may rely on the Multi-Manager Order, the operation of the New Fund as a multi-manager fund, as described in the application for the Multi-Manager Order, will be approved, following the substitutions proposed in this Application, by a majority of that New Fund's outstanding voting securities.

20. Each of the New Funds (North American-Founders/T.Rowe Price Small Cap Fund, North American-American Century Income & Growth Fund, North American-American Century International Growth Fund, and North American-Founders Large Cap Growth Fund) have management fees higher than those of existing funds they will replace. Each such replacement fund will hold a shareholder meeting to approve the investment advisory contract pursuant to Section 15 of the Act within 120 after the substitution occurs. The difference between the management fee paid by the existing fund and the fee payable under the new investment advisory contract will be held in escrow pending the shareholder vote. If the shareholders of a New Fund

do not approve the advisory contract, VALIC will return the money held in escrow to the New Fund, and the directors will consider alternatives in the best interests of shareholders.

21. Applicants further agree that for each of the New Funds, proxy materials will disclose, on a pro forma basis, the amount of the proposed management fee, other fund expenses, and total fund expenses. Applicants agree that VALIC will, for two years from the date of the substitution, limit total fund expenses for each New Fund to the percentage levels set forth in the Application and disclosed in the New Fund's proxy materials. Accordingly, annualized total fund expenses of each New Fund during the two-year period will be capped at the following levels.

North American—Founders/T. Rowe Price Small Cap Fund—.96%.
North American—American Century Income & Growth Fund—.83%
North American—American Century International Growth Fund—1.06%
North American—Founders Large Cap Growth Fund—1.06%

22. In addition, in any case in which shareholders of a New Fund do not approve the new investment advisory contract, VALIC agrees that it will limit the annualized management fee of the New Fund to the same level as that of the existing fund and the total annualized expenses of the New Fund to that of the existing fund, adjusted to reflect any reductions in separate account charges that take effect in connection with the substitution. Such limitation will apply until shareholders approve a new investment advisory contract. Accordingly, the total annualized fund expenses of each New Fund in such a case would be as follows:

North American—Founders/T. Rowe Price Small Cap Fund—.88%
North American—American Century Income & Growth Fund—.80%
North American—American Century International Growth Fund—1.13%
North American—Founders Large Cap Growth Gund—1.08%

23. North American—AG Core Bond Fund, North American AG Moderate Growth Lifestyle Fund and North American International Growth Fund have advisory fees lower than the existing funds they will replace. VALIC will cap each such replacement fund's total fund expenses at the same level as the total fund expenses of the respective existing fund (net of any waivers or reimbursements) at least until the end of the fiscal year ending August 31, 2002.

Accordingly, annualized total fund expenses will be capped at the following levels for the period ending August 31, 2002.

North American AG Core Bond Fund—.77%
North American AG Moderate Growth Lifestyle Fund—.80%
North American International Growth Fund—1.01%

24. Applicants further agree that VALIC will not increase total separate account charges (net of any waivers or reimbursements) for any of the Contracts involved in the substitution for a period of two years from the date of the substitution. Accordingly, total annualized separate account charges (net of any waivers or reimbursements) during the two year period will not exceed the following levels:

1.00% for North American—Founders/T.Rowe Price Small Cap Fund, North American—American Century Income & Growth Fund, North American—American Century International Growth Fund, and North American—Founders Large Cap Growth Fund.
.75% for North American—AG Core Bond Fund, North American—AG Moderate Growth Lifestyle Fund, and North American International Growth Fund.

Applicants' Legal Analysis

1. Section 26(b) of the Act requires the depositor of a registered unit investment trust holding the securities of a single issuer to obtain Commission approval before substituting the securities held by the trust. Specifically, Section 26(b) states:

> It shall be unlawful for any depositor or trustee of a registered unit investment trust holding the security of a single issuer to substitute another security for such security unless the Commission shall have approved such substitution. The Commission shall issue an order approving such substitution if the evidence establishes that it is consistent with the protection of investors and the purposes fairly intended by the policy and provisions of this title.

2. The Substitution Applicants state that the proposed substitutions appear to involve substitutions of securities within the meaning of Section 26(b) of the Act and request that the Commission issue an order pursuant to Section 26(b) of the Act approving the proposed substitutions.

3. The Contracts expressly reserve for VLAIC the right, subject to Commission approval, to substitute shares of another Management Company for shares of a Management Company held by a sub-account of the Account.

4. The Substitution Applicants request an order of the Commission pursuant to Section 26(b) of the Act approving the proposed substitutions by VALIC. The Substitution Applicants assert that the proposed substitutions are consistent with the protection of investors and the purposes fairly intended by the policy and provisions of the Act.

5. The Substitution Applicants assert that each of the proposed substitutions is not the type of substitution which Section 26(b) was designed to prevent. Unlike traditional unit investment trusts where a depositor could only substitute an investment security in a manner which permanently affected all the investors in the trust, the Contracts provide that each Contract owner has the right to exercise his or her own judgment and transfer Contract or cash value into other sub-accounts. Moreover, the Contracts will offer Contract owners the opportunity to transfer amounts out of the affected sub-accounts into any of the remaining sub-accounts without cost or other disadvantage. The Substitution Applicants assert that the proposed substitutions, therefore, will not result in the type of costly forced redemption which Section 26(b) was designed to prevent.

6. The Substitution Applicants assert that proposed substitutions also are unlike the type of substitution which Section 26(b) was designed to prevent in that by purchasing a Contract, Contract owners select much more than a particular investment company in which to invest their account values. They also select the specific type of insurance coverage offered by VALIC under their Contract as well as numerous other rights and privileges set forth in the Contract. Contract owners may also have considered VALIC's size, financial condition, and its reputation for service in selecting their Contract. These factors will not change as a result of the proposed substitutions.

7. Section 17(a)(1) of the Act, in relevant part, prohibits any affiliated person of a registered investment company, or any affiliated person of such person, acting as principal, from knowingly selling any security or other property to that company. Section 17(a)(2) of the Act generally prohibits the persons described above, acting as principals, from knowingly purchasing any security or other property form the registered company.

8. Section 2(a)(3) of the Act defines the term ''affiliated person of another person'' in relevant part as:

(A) any person directly or indirectly owning, controlling, or holding with power to vote, 5 per centum or more of the outstanding voting securities of such person; (B) any person 5 per centum or

more of whose outstanding voting securities are directly or indirectly owned, controlled, or held with power to vote, by such person; (C) any person directly or indirectly controlling, controlled by, or under common control with, such other person; * * * (E) if such other person is an investment company, any investment adviser thereof * * *.

Section 2(a)(9) of the Act states that any person who owns beneficially, either directly or through one or more controlled companies, more than 25% of the voting securities of a company shall be presumed to control such company.

9. Because shares held by a separate account of an insurance company are legally owned by the insurance company, VALIC owns of record substantially all of the shares of NAFV I and NAFV II. Therefore, NAFV I and NAFV II and their respective funds are arguably under the control of VALIC notwithstanding the fact that Contract owners may be considered the beneficial owners of those shares held in the Account. If NAFV I and NAFV II and their respective funds are under VALIC control, then VALIC is an affiliated person of NAFV I and NAFV II and their respective funds. If NAFV I and NAFV II and their respective funds are under VALIC control, then NAFV I and NAFV II and their respective funds are affiliated person of each other.

10. Regardless of whether or not VALIC can be considered to control NAFV I and NAFV II and their respective funds, because VALIC owns of record more than 5% of the shares of each of them and is each replacement fund's investment adviser, VALIC is an affiliated person of both NAFV I and NAFV II and their respective Funds. Likewise, their respective funds are each an affiliated person of an affiliated person of each other.

11. Because the substitutions may be effected, in whole or in part, by means of in-kind redemptions and purchases, the substitutions may be deemed to involve one or more purchases or sales of securities or property between affiliated persons or between affiliated persons of affiliated persons. The proposed transactions may involve a transfer of portfolio securities by the existing funds to the Account; immediately thereafter, the Account would purchase shares of the replacement funds with the portfolio securities received from the existing funds. Accordingly, as the Account and the replacement funds could be viewed as affiliated persons of one another under Section 2(a)(3) of the Act, it is conceivable that this aspect of the substitutions could be viewed as being prohibited by Section 17(a). Accordingly, the Section 17 Applicants have determined that it is prudent to seek relief from Section 17(a) in the context of this Application for the in-kind purchases and sales of the replacement fund shares.[1]

12. Section 17(b) of the Act provides that the Commission may, upon application, grant an order exempting any transaction from the prohibitions of Section 17(a) if the evidence establishes that: (a) The terms of the proposed transaction, including the consideration to be paid or received, are reasonable and fair and do not involve overreaching on the part of any person concerned; (b) the proposed transaction is consistent with the policy of each registered investment company concerned, as recited in its registration statement and records filed under the Act, and (c) the proposed transaction is consistent with the general purposes of the Act.

13. The Section 17 Applicants submit that the terms of the proposed in-kind purchases of shares of the replacement funds by the Account, including the consideration to be paid and received, as described in this Application, are reasonable and fair and do not involve overreaching on the part of any person concerned. The Section 17 Applicants also submit that the proposed in-kind purchases by VALIC are consistent with the policies of each of the replacement funds. Finally, the Section 17 Applicants submit that the proposed substitutions are consistent with the general purposes of the Act.

Conclusion

Applicants assert that, for the reasons summarized above, the proposed substitutions and related transactions meet the standards of Section 26(b) of the Act and are consistent with the standards of Section 17(b) of the Act and that the requested orders should be granted.

For the Commission, by the Division of Investment Management pursuant to delegated authority.

Jonathan G. Katz,

Secretary.

APPENDIX—COMPARISON OF EXPENSES OF EXISTING AND REPLACEMENT FUNDS

Current fund and separate account expenses (percent of net asset value)								Replacement fund and separate account expenses (percent of net asset value)					
Existing fund	Total fund assets (in millions)	Total fund assets held by the account (in millions)	Mgmt. fee	Other fund expenses	M&E and A&D expenses	Separate account reimb.[1]	Total expenses	Replacement fund	Mgmt. fee	Other fund expenses	M&E and A&D expenses	Separate account reimb.[1]	Total expenses
Dreyfus VIF Small Cap.	$1,611.6	$906.8	0.75	0.03	1.25	(0.15)	1.88	North American—Founders/T. Rowe Price Small Cap Stock Fund.	0.90	0.06	1.00	0	1.96
T.Rowe Price Small Cap Stock Fund.	2,084.2	14.8	0.77	0.19	1.25	0	2.21	Same as above.					
Scudder Growth and Income Fund.	6,079.2	236.7	0.45	0.35	1.25	(0.25)	1.80	North American—American Century Income & Growth Fund.	0.77	0.06	1.00	0	1.83
Neuberger Berman Guardian Trust.	1,094.7	59.4	0.84	0.04	1.25	(0.25)	1.88	Same as above.					

[1] With respect to the in-kind redemptions of any shares of the Existing Funds, as previously stated above, Applicants will make any such in-kind redemptions only in accordance with the conditions set out in the *Signature* no-action letter. In light of this fact, the Section 17 Applicants are not requesting relief with respect to those in-kind redemptions.

APPENDIX—COMPARISON OF EXPENSES OF EXISTING AND REPLACEMENT FUNDS—Continued

Current fund and separate account expenses (percent of net asset value)								Replacement fund and separate account expenses (percent of net asset value)					
Existing fund	Total fund assets (in millions)	Total fund assets held by the account (in millions)	Mgmt. fee	Other fund expenses	M&E and A&D expenses	Separate account reimb.[1]	Total expenses	Replacement fund	Mgmt. fee	Other fund expenses	M&E and A&D expenses	Separate account reimb.[1]	Total expenses
Templeton International Securities Fund.	1,756.8	737.6	0.69	0.19	1.25	0	2.13	North American—American Century International Growth Fund.	1.00	0.06	1.00	0	2.06
Dreyfus Founders Growth Fund.	3,480.0	1,069.1	0.67	0.41	1.25	(0.25)	2.08	North American—Founders Large Cap Growth Fund.	1.00	0.60	1.00	0	2.06
American General Domestic Bond Fund.	14.5	14.5	0.59	0.18	1.00	(0.25)	1.52	North American—AG Core Bond Fund.	0.50	0.25	1.00	(0.25)	1.50
American General Balanced Fund.	12.8	12.8	0.78	[2] 0.02	1.00	(0.25)	1.55	North American—AG Moderate Growth Lifestyle Fund.	0.10	[3] 0.88	1.00	(0.25)	1.73
American General International Value Fund.	13.2	13.2	0.97	[4] 0.04	1.00	(0.25)	1.76	North American International Growth Fund.	0.88	[5] 0.25	1.00	(0.25)	1.88

[1] VALIC reimburses a subaccount for fees it receives from a fund or its affiliate or distributor for providing the fund administrative or shareholder services.

[2] VALIC currently waives or reimburses certain fees and expenses of American General Balanced Fund. During the fiscal year ended August 31, 1999, these waivers and reimbursements equaled 0.98% of net assets of the fund. Without these waivers and reimbursements, the total Other Fund Expenses of American General Balanced Fund would have been 1.00% of net assets.

[3] These expenses are those of the underlying funds in which the North American—AG Moderate Growth Lifestyle Fund invests.

[4] VALIC currently waives or reimburses certain fees and expenses of American General International Value Fund. During the fiscal year ended August 31, 1999, those waivers and reimbursements equaled 0.96% of net assets of the fund. Without these waivers and reimbursements, the total Other Fund Expenses of American General International Fund would have been 1.00% of net assets.

[5] VALIC currently waives or reimburses certain fees and expenses of North American International Growth Fund. During the fiscal year ended August 31, 1999, those waivers and reimbursements equaled 0.77% of net assets of the fund. Without these waivers and reimbursements, the total Other Fund Expenses of North American International Growth Fund would have been 1.02% of net assets.

[FR Doc. 00–28049 Filed 10–31–00; 8:45 am]

BILLING CODE 8010–01–M

TENNESSEE VALLEY AUTHORITY

Environmental Impact Statement—Montana Land Company Land Exchange—Hardin County, Tennessee

AGENCY: Tennessee Valley Authority (TVA).

ACTION: Notice of Intent.

SUMMARY: This notice is provided in accordance with the Council on Environmental Quality's regulations (40 CFR Parts 1500 to 1508) and TVA's procedures implementing the National Environmental Policy Act. TVA will prepare an Environmental Impact Statement (EIS) on alternatives for a requested land exchange by Montana Land Company, L. L. C. (MLC) involving 22 acres of TVA land on Pickwick Reservoir, which is proposed to be exchanged for 164 acres of property, also on Pickwick Reservoir, in Hardin County, Tennessee.

DATES: Comments on the scope of the EIS must be received on or before November 30, 2000.

ADDRESSES: Written comments should be sent to Jon M. Loney, Manager, NEPA Administration, Environmental Policy and Planning, Tennessee Valley Authority, 400 West Summit Hill Drive, Knoxville, Tennessee 37902–1499.

FOR FURTHER INFORMATION CONTACT: Harold M. Draper, NEPA Specialist, Environmental Policy and Planning, Tennessee Valley Authority, 400 West Summit Hill Drive, WT 8C, Knoxville, Tennessee 37902–1499; telephone (865) 632–6889 or e-mail hmdraper@tva.gov.

SUPPLEMENTARY INFORMATION: Pickwick Reservoir is an impoundment of the Tennessee River formed by Pickwick Landing Dam, which is located at Tennessee River Mile (TRM) 206.7 in Hardin County, Tennessee. Pickwick Reservoir is located in parts of three States—Alabama, Mississippi, and Tennessee. The Tennessee Valley Authority (TVA) originally acquired 63,625 acres of land for construction of the reservoir, which was begun in December 1934 and completed in February 1938. TVA has retained 17,358 acres of land lying above full pool elevation. At full pool, the reservoir is 52.7 miles long, shoreline length is 490.6 miles, and surface area is 43,100 acres.

In the late 1980s, private developers began construction on a residential and resort subdivision consisting of 3,000 acres and extending for 11.5 miles along the shoreline of lower Pickwick Reservoir. This development was named Points of Pickwick. The project features waterfront lots, waterview lots, interior single family lots, zero lot line developments, condominium residences, an 18-hole championship golf course, underground utilities, a community marina, and nature trails. In 1995, MLC acquired the property and has continued subdivision development. TVA owns land along two embayments, Lower Anderson Branch and Haw Branch, which extend into this development. No private shoreline access rights exist across the TVA parcels. Shoreline access rights exist across a narrow TVA-owned shoreline band adjoining MLC properties, including the parcel proposed to be exchanged with TVA.

In 1999, TVA completed an EIS on residential shoreline development impacts throughout the Tennessee Valley. The Record of Decision (ROD) was published at 64 FR 30092–30094. In order to limit the eventual development of shoreline and accompanying impacts to aquatic ecology, water quality, scenic beauty, and other valuable resources, the ROD indicated that TVA would adopt a strategy of ''maintaining and gaining'' public shoreline. Under this strategy, TVA agreed to consider

proposals for additional water use access and residential development if it could be shown that the loss of public shoreline was offset by a gain in shoreline resource amenities and public value. TVA's overall goal in implementing this strategy would be to maintain and improve environmental integrity, maintain and enhance public benefits from reservoir lands, and keep the projected maximum residential buildout level at 38 percent of the shoreline length for the Tennessee Valley region.

In 1981, TVA published a land allocation plan for Pickwick Reservoir. The Pickwick Reservoir Plan allocated the tract on Lower Anderson Branch (Planned Tract 1, 12 acres) as open space and the tract on Haw Branch (Planned Tract 2, 36 acres) as open space and a safety harbor. These tracts are located in Hardin County, Tennessee on the right bank near Tennessee River Mile (TRM) 210.0.

After reviewing TVA's Shoreline Management decision, MLC made a request for fee transfer of Planned Tract 1 (Lower Anderson Branch) and Planned Tract 2 (Haw Branch) in exchange for approximately 160 acres of MLC-owned land. TVA solicited comments on this proposal through a public notice in July 2000. The response to this notice indicated that there were concerns over whether the project was an equitable trade and whether the exchange would be environmentally beneficial. In addition, the initial environmental evaluation has revealed concerns over the impacts of exchanging highly visible public land on the main reservoir for lands at the back of a cove. Because of the potential environmental benefits of a gain in public land on lower Pickwick Reservoir, TVA has decided to continue consideration of this request. However, because of concerns about the significance of the impacts should residential development occur on the two tracts proposed for exchange, TVA has elected to prepare an Environmental Impact Statement to better understand the impacts of the proposal.

At this time, TVA anticipates that three alternatives would be analyzed in the EIS. Under No Action, TVA would not amend the Pickwick Reservoir Plan and would not exchange the two tracts of TVA land. A second alternative would consider the original request by the developer for 48 acres of TVA land in exchange for approximately 122 acres of privately-owned property in Haw Branch. A third alternative would consider the developer's request and mitigation measures to reduce environmental impacts. This would include 22 acres of TVA in exchange for 164 acres of privately-owned property, along with 50-foot shoreline buffer management zones and community water-use facilities.

Based on the results of the previous public meeting and subsequent public comments, TVA anticipates that the EIS will include discussion of the potential effects of alternatives on the following resources and issue areas: visual resources, cultural resources, threatened and endangered species, terrestrial ecology, wetlands, recreation, water quality, aquatic ecology, and socioeconomics. Other issues which may be discussed, depending on the potential impacts of the alternatives, include floodplains and air quality.

TVA is interested in receiving additional comments on the scope of issues to be addressed in the EIS. Written comments on the scope of the EIS should be received on or before November 30, 2000. Following completion of the Draft EIS, an additional opportunity to review and comment on the proposal will be provided at that time.

Dated: October 24, 2000.

Kathryn J. Jackson,

Executive Vice President River System Operations & Environment.

[FR Doc. 00–28005 Filed 10–31–00; 8:45 am]

BILLING CODE 8120–08–U

OFFICE OF THE UNITED STATES TRADE REPRESENTATIVE

Generalized System of Preferences (GSP); Notice Regarding Possible Changes to Product Eligibility for India

AGENCY: Office of the United States Trade Representative.

ACTION: Notice.

SUMMARY: This notice announces a process for considering changes to the product eligibility list for India under the Generalized System of Preferences (GSP) program; lists the schedule for the public hearing that is part of this process, for requesting participation in the hearing and for submitting pre-hearing and post-hearing briefs.

FOR FURTHER INFORMATION CONTACT: GSP Subcommittee, Office of the United States Trade Representative, 600 17th Street, NW, Room 518, Washington, DC 20508. The telephone number is (202) 395–6971.

SUPPLEMENTARY INFORMATION: The GSP program grants duty-free treatment to designated eligible articles that are imported from designated beneficiary developing countries. The GSP program is authorized by Title V the Trade Act of 1974, as amended (''Trade Act'') (19 U.S.C. 2461 *et seq.*), and administered in accordance with GSP regulations (15 CFR part 2007) which provide for a review of product eligibility. This notice requests public comment on possible changes in the GSP product eligibility list for India through the redesignation and waiver of ''competitive need limitations'' (CNLs) for the articles included in the annex to this notice. Authorization for granting CNL waivers is set forth in section 503(d) of the Trade Act (19 U.S.C. 2464(d)). GSP benefits also may be abridged. In making such a determination the President may consider several factors, one of which is whether the country offers reasonable and equitable market access for U.S. goods and services (19 U.S.C. 2462(c)(4)). Since the process for curtailing benefits does not involve advice from the United States International Trade Commission (USITC) and is therefore shorter, the public is advised that, under the current market conditions, comment on will be sought early next year on whether to restrict certain GSP benefits now enjoyed by India. The specific tariff headings to be considered will be circulated early next year.

It is expected that decisions on both issues will be made on or about April 1, 2001. Each process will be conducted to meet that timetable.

Opportunities for Public Comment and Inspection of Comments

The GSP Subcommittee of the TPSC invites comments in support of, or in opposition to, the redesignations and CNL waivers which are the subject of this notice. Submissions should comply with 15 CFR part 2007, including §§ 2007.0, and 2007.1. All submissions should identify the subject article(s) in terms of the current Harmonized Tariff Schedule of the United States (''HTS'') nomenclature.

Comments should be submitted in fourteen (14) copies in English, to the chairman of the GSP Subcommittee of the Trade Policy Staff Committee, 600 17th Street, NW, Room 518, Washington, DC 20508. Information submitted will be subject to public inspection by appointment with the staff of the USTR public reading room, except for information granted ''business confidential''status pursuant to 15 CFR 2003.6 and other qualifying information submitted in confidence pursuant to 15 CFR 2007.7. If the document contains confidential information, an original and fourteen (14) copies of a nonconfidential version of the submission along with an original

and fourteen (14) copies of the confidential version must be submitted. In addition, any document containing confidential information should be clearly marked ''confidential'' at the top and bottom of each page of the document. The version that does not contain confidential information (the public version) should also be clearly marked at the to and bottom of every page (either ''public version'' or ''nonconfidential''). Comments should be submitted no later than 5 p.m. on December 6, 2000.

Notice of Public Hearings

Hearings will be held on January 5, 2001 beginning at 10:00 a.m. at the Office of the United States Trade Representative, White House Conference Center, Truman Room, 726 Jackson Place, NW., Washington, DC 20508. The hearings will be open to the public and a transcript of the hearings will be made available for public inspection or can be purchased from the reporting company. No electronic media coverage will be allowed.

All interested parties wishing to present oral testimony at the hearings must submit the name, address, and telephone number of the witnesses representing their organization to the Chairman of the GSP Subcommittee. Such requests to present oral testimony at the public hearings should be accompanied by fourteen (14) copies, in English, of a written brief or statement, and should be received by 5 p.m. on December 6, 2000. Oral testimony before the GSP Subcommittee will be limited to five minute presentations that summarize or supplement information contained in the briefs or statements submitted for the record. Post-hearing and rebuttal briefs or statements should conform to the regulations cited above and be submitted in fourteen (14) copies, in English, no later than 5 p.m. February 2, 2001. Interested persons not wishing to appear at the public hearings may also submit pre-hearing written briefs or statements by 5 p.m. on December 6, 2000, and post-hearing and rebuttal written briefs or statements by February 2, 2001. Comments by interested persons on the USITC Report prepared as part of the product review should be submitted in fourteen (14) copies, in English, by 5 p.m. on February 28, 2001.

Jon Rosenbaum,

Assistant U.S. Trade Representative for Trade and Development.

ANNEX

HTS sub-heading	Article
[The bracketed language in this Annex has been included only to clarify the scope of the numbered subheadings which are being considered, and such language is not itself intended to describe articles which are under consideration.]	
Waiver of the competitive need limits for India for certain products on the list of eligible products for the Generalized System of Preferences.	
	Articles of jewelry and parts thereof, of precious metal or of metal clad with precious metal;
	Of precious metal whether or not plated or clad with precious metal:
	[Of silver, whether or not plated or clad with other precious metal]
	Of other precious metal, whether or not plated or clad with precious metal:
	[Rope, curb, cable, chain and similar articles produced in continuous lengths, all the foregoing, whether or not cut to specific lengths and whether or not set with imitation pearls or imitation gemstones, suitable for use in the manufacture of articles provided for in this heading]
	Other:
	Necklaces and neck chains, of gold:
	[Rope]
7113.19.25	Mixed link.
7113.19.29	Other.
	[Clasps and parts thereof]
7113.19.50	Other.
	Table, kitchen or other household articles and parts thereof, of copper; pot scourers and scouring or polishing pads, gloves and the like, of copper; sanitary ware and parts thereof, of copper:
	Table, kitchen or other household articles and parts thereof, pot scourers and scouring or polishing pads, gloves and the like:
	[Pot scourers and scouring or polishing pads, gloves and the like]
	Other:
7418.19.10	Coated or plated with precious metals:
	Lamps and lighting fittings including searchlights and spotlights and parts thereof, not elsewhere specified or included; illuminated signs, illuminated nameplates and the like, having a permanently fixed light source, and parts thereof not elsewhere specified or included:
	Non-electrical lamps and lighting fittings.
	[Incandescent lamps designed to be operated by propane or other gas, or by compressed air and kerosene or gasoline]
	Other:
9405.50.30	Of brass

[FR Doc. 00–28050 Filed 10–31–00; 8:45 am]
BILLING CODE 3901–01–M

DEPARTMENT OF TRANSPORTATION

Federal Motor Carrier Safety Administration

[Docket No. FMCSA–2000–8033]

Notice of Request for Comments on Renewing the Approval for an Information Collection: Motor Carrier Safety Assistance Program

AGENCY: Federal Motor Carrier Safety Administration (FMCSA), DOT.

ACTION: Notice and request for comments.

SUMMARY: This action informs the public that FMCSA intends to request the Office of Management and Budget (OMB) to renew approval for the information collection required by the Motor Carrier Safety Assistance Program. That information consists of grant application preparation, quarterly reports, and electronic data documenting the results of driver/vehicle inspections performed by the states. This notice is required by the Paperwork Reduction Act.

DATES: You must submit comments by January 2, 2001.

ADDRESSES: Mail or hand deliver comments to the U.S. Department of Transportation, Dockets Management Facility, Room PL–401, 400 Seventh Street, SW., Washington, DC 20590, or submit electronically at *http://dmses.dot.gov/submit.* Be sure to include the docket number appearing in the heading of this document on your comment. All comments received will be available for examination and copying at the above address from 9 a.m. to 5 p.m., e.t., Monday through Friday, except Federal holidays. If you would like to be notified when your comment is received, you must include a self-addressed, stamped postcard or you may print the acknowledgment page that appears after submitting comments electronically.

FOR FURTHER INFORMATION CONTACT: James D. McCauley, (202) 366–0133, Office of Safety Programs, Federal Motor Carrier Safety Administration, Department of Transportation, 400 Seventh Street, SW., Washington, DC, 20590. Office hours are from 7:30 a.m. to 4 p.m., e.t., Monday through Friday, except Federal holidays.

SUPPLEMENTARY INFORMATION:

Title: Motor Carrier Safety Assistance Program.

OMB Number: 2126–0010.

Background: Sections 401–404 of the Surface Transportation Assistance Act of 1982 (STAA) established a program of financial assistance to states for the purpose of implementing programs to enforce (a) Federal rules, regulations, standards, and orders applicable to commercial motor vehicle safety; and (b) compatible state rules, regulations, standards, and orders. This grant-in-aid program is known as the Motor Carrier Safety Assistance Program (MCSAP). The Intermodal Surface Transportation Efficiency Act of 1991 (ISTEA) added programs, such as drug interdiction, traffic enforcement, and size and weight activities to the core program established by the STAA.

The Transportation Equity Act for the 21st Century (TEA–21) further revised the MCSAP by broadening its purpose beyond enforcement activities and programs by requiring participating states to assume greater responsibility for improving motor carrier safety. The TEA–21 required states to develop performance-based plans reflecting national priorities and performance goals, revised the MCSAP funding distribution formula, and created a new incentive funding program. As a result, States are given greater flexibility in designing programs to address national and State goals for reducing the number and severity of commercial motor vehicle (CMV) accidents. The implementing regulations were published in a final rule in the March 21, 2000, **Federal Register** at 65 FR 15092.

In order to qualify for a grant, participating states must submit a Commercial Vehicle Safety Plan (CVSP). After the grant is awarded, states must submit inspection data and quarterly reports explaining work activities and accomplishments. The FMCSA monitors and evaluates a state's progress under its approved CVSP. The agency also determines whether a change in the state's level of effort is required to meet the intended objectives of the CVSP. If a state fails to operate within the guidelines of the approved CVSP or does not remedy any identified deficiencies or incompatibilities in a timely manner, the FMCSA may cease participation in that state's CVSP. This information collection provides the basis for these responsibilities and decisions.

The quarterly report and inspection data are collected electronically. States continue to submit the CVSP in hard copy. The estimated annual burden for this collection has been significantly reduced due to increased use of information technology.

Respondents: State and local MCSAP lead agencies.

Estimated Total Annual Burden: Grant application preparation: 832 hours; quarterly report preparation: 333 hours; inspection data upload: 6,667 hours. The above figures reflect 20 percent of the total estimated hours to perform the activities listed since MCSAP reimburses up to 80 percent of the eligible costs incurred in the administration of an approved plan as set forth in 49 CFR 350.303, 350.309 and 350.311.

Public Comments Invited: We invite you to comment on any aspect of this information collection, including, but not limited to (1) whether the collection of information is necessary for the proper performance of the functions of the FMCSA, including whether the information has practical utility; (2) the accuracy of the estimated burden; (3) ways to enhance the quality, utility, and clarity of the collected information; and (4) ways to minimize the collection burden without reducing the quality of the information collected.

Electronic Access and Filing: You may submit or retrieve comments online through the Docket Management System (DMS) at *http://dmses.dot.gov/submit.* Acceptable formats include: MS Word (versions 95 to 97), MS Word for Mac (versions 6 to 8), Rich Text File (RTF), American Standard Code Information Interchange (ASCII)(TXT), Portable Document Format (PDF), and WordPerfect (versions 7 to 8). The DMS is available 24 hours each day, 365 days each year. Electronic submission and retrieval help and guidelines are available under the help section of the web site.

An electronic copy of this document may be downloaded by using a computer, modem and suitable communications software from the Government Printing Office's Electronic Bulletin Board Service at (202) 512–1661. Internet users may reach the Office of the Federal Register's home page at *http://www.nara.gov/fedreg* and the Government Printing Offices's web page at http://www.access.gpo.gov/nara.

Authority: The Paperwork Reduction Act of 1995, 44 U.S.C. Chapter 35, as amended; and 49 CFR 1.73.

Issued on: October 17, 2000.

Clyde J. Hart, Jr.,

Acting Deputy Administrator.

[FR Doc. 00–27974 Filed 10–31–00; 8:45 am]
BILLING CODE 4910–EX–P

DEPARTMENT OF TRANSPORTATION

Surface Transportation Board

[STB Docket No. AB–55 (Sub–No. 582X)]

CSX Transportation, Inc.—Discontinuance of Trackage Rights Exemption—in Bristol County, MA

CSX Transportation, Inc. (CSXT) has filed a notice of exemption under 49 CFR 1152 Subpart F—*Exempt Abandonments and Discontinuances of Trackage Rights* to discontinue trackage rights over an approximately 2.5-mile line of railroad owned by the Massachusetts Bay Transportation Authority (MBTA) between milepost QVJ–0.6 and milepost QVJ 3.1 near Seekonk, in Bristol County, MA. The line traverses United States Postal Service Zip Codes 02771 and potentially 02703.

CSXT has certified that: (1) No local traffic has moved over the line for at least 2 years; (2) there is no overhead traffic on the line; (3) no complaint filed by a user of rail service on the line (or by a state or local government entity acting on behalf of such user) regarding cessation of service over the line either is pending with the Surface Transportation Board (Board) or with any U.S. District Court or has been decided in favor of complainant within the 2-year period; and (4) the requirements at 49 CFR 1105.7 (environmental reports), 49 CFR 1105.8 (historic reports), 49 CFR 1105.11 (transmittal letter), 49 CFR 1105.12 (newspaper publication), and 49 CFR 1152.50(d)(1) (notice to governmental agencies) have been met.

As a condition to this exemption, any employee adversely affected by the abandonment shall be protected under *Oregon Short Line R. Co.—Abandonment—Goshen,* 360 I.C.C. 91 (1979). To address whether this condition adequately protects affected employees, a petition for partial revocation under 49 U.S.C. 10502(d) must be filed.

Provided no formal expression of intent to file an offer of financial assistance (OFA) has been received, this exemption will be effective on December 1, 2000, unless stayed pending reconsideration. Petitions to stay and formal expressions of intent to file an OFA under 49 CFR 1152.27(c)(2) [1] must be filed by November 13, 2000. Petitions to reopen [2] must be filed by November 21, 2000, with: Surface Transportation Board, Office of the Secretary, Case Control Unit, 1925 K Street, NW., Washington, DC 20423.

A copy of any petition filed with the Board should be sent to applicant's representative: Natalie S. Rosenberg, Counsel, CSX Transportation, Inc., 500 Water Street J150, Jacksonville, FL 32202.

If the verified notice contains false or misleading information, the exemption is void *ab initio.*

Board decisions and notices are available on our website at ''WWW.STB.DOT.GOV.''

Decided: October 23, 2000.

By the Board, David M. Konschnik, Director, Office of Proceedings.

Vernon A. Williams,

Secretary.

[FR Doc. 00–27805 Filed 10–31–00; 8:45 am]

BILLING CODE 4915–00–P

[1] Each offer of financial assistance must be accompanied by the filing fee, which currently is set at $1000. *See* 49 CFR 1002.2(f)(25).

[2] Because MBTA will continue to provide rail service over the line, there is no need to provide an opportunity for trail use/rail banking or public use condition requests. Likewise, no environmental or historic documentation is required under 49 CFR 1105.6(c)(6) and 1105.8.

DEPARTMENT OF THE TREASURY

[Treasury Directive Number 74–14]

Treasury Telework and Flexiplace Program

October 18, 2000.

1. Purpose

This directive establishes the Department's policy for alternative workplace arrangements. It authorizes the use of Telework programs by Treasury bureaus and offices by permitting employees to work full or part-time at approved locations other than their official duty station. This directive sets forth a program that provides an opportunity for an employee to work at an alternative work site without changing an employee's official duty station or other conditions of employment.

2. Policy

It is the policy of the Department of the Treasury to provide employees the opportunity to utilize technology in order to participate in Telework programs where practical and consistent with agency mission. Consistent with the guidance set forth in this directive, each Treasury bureau or office shall establish a Telework program that permits it to meet its specific mission while supporting teleworking.

3. Background

Teleworking is a flexible arrangement that allows an employee to work away from the traditional office or official duty station in either (1) his/her home, (2) a Telework center, such as those established by the General Services Administration (GSA) or, (3) a virtual or mobile office setting. Telework programs may be designed to allow employees to work full or part-time, depending on the mission of the bureau and the roles and responsibilities of a particular office and its employees.

Programs may be designed for purposes such as: (1) Improving the bureau's ability to recruit and retain employees in a highly competitive market, (2) achieving cost savings by reducing real property needed for office space, (3) increasing employee morale and productivity, (4) and reducing traffic congestion, energy consumption, and air pollution.

4. Definitions

The following are definitions of terms used in this document:

a. *Flexiplace.* An alternative location at which an employee is allowed to work in lieu of reporting to the official duty station. The work site is not to be considered a barrier to an employee's ability to perform such obligations as official travel, attending face-to-face meetings and communication with colleagues and customers. Flexiplace addresses the location of the work site as opposed to the work schedule.

b. *Telework.* A program permitting employees to work at designated locations including work at home or other preapproved alternative work site.

c. *Teleworker.* An employee who, with the approval of his/her supervisor, works full or part-time at locations or work sites other than the official duty station.

d. Telework Center. A facility established under section 210(1) of the Federal Property and Administration Services Act of 1949 (40 U.S.C. 490(1)) or other Federal law, composed of generic workstations designed to accommodate employees from different agencies. Telework centers are equipped with telecommunications and other office equipment to facilitate communication with the official duty station and other places of business, to perform daily routine work responsibilities. Telework centers are generally located in easily accessible light industrial or commercial zones near large residential areas.

e. *Full time Employee.* One who works a 40-hour workweek consisting of specific days and hours at a designated

work site(s). Full time employees must meet all obligations of the position regardless of work site arrangement.

5. Responsibilities

a. *The Assistant Secretary for Management and Chief Financial Officer* is responsible for the overall administration of the Departmental Telework and Flexiplace program.

b. *The Deputy Assistant Secretary (Management Operations)* and the Deputy Assistant Secretary (Human Resources) shall:

(1) designate:

(a) a Departmental coordinator to serve as primary contact, and

(b) Program Managers to provide information and support resources to assist in the organization and implementation of Telework programs throughout the Department;

(2) identify training and support resources, and coordinate Treasury initiatives and reports as required.

c. *The Deputy Assistant Secretary (Information Systems) and Chief Information Officer* shall provide advisory information systems services to support the Telework programs as needed.

d. *The Chief Management and Administrative Programs Officer, Heads of Bureaus and Offices, the Inspector General, and the Inspector General for Tax Administration,* as it relates to their respective bureaus and offices, shall:

(1) establish Telework programs at all bureau/office locations where possible and appropriate to bureau/office mission;

(2) appoint one or more Bureau/Office Telework Coordinator(s) to serve as contact and liaison between the Department and the bureau/office;

(3) within 90 days of the effective date of this directive, establish a bureau/office baseline on employee Telework participation, to be used in program evaluations and future progress reports;

(4) submit annual reports within 30 days of the end of the fiscal year to the Departmental Coordinators on the status of the bureau/office Telework program; and

(5) complete all labor relations responsibilities.

6. Telework Arrangements

a. Participation in a telework arrangement is not an employee entitlement. An employee may participate in the program if the responsible supervisor or designee decides that the employee's job duties are appropriate for offsite work

b. The telework arrangement under which an employee will perform work must be clearly set forth in a written agreement and signed by the respective supervisor and employee. The agreement must specify:

(1) The alternative work site (*i.e.,* work-at-home, Telework center or other),

(2) Specific hours and days per week to be worked at the alternate work place,

(3) Pertinent office equipment to be provided and by whom,

(4) Method of communication to be used between the official duty station and alternate work place, and

(5) Duties to be performed and methods of evaluation to be employed.

c. A Telework arrangement does not alter the terms and conditions of appointment, including an employee's official duty station, salary, benefits, individual rights, or obligations. All pay, leave, and travel entitlement shall be based on the official duty station. The Telework arrangement shall not affect other conditions of employment, *e.g.,* hours of work, unless otherwise specified in the Telework agreement.

d. Upon appropriate notice the bureau (manager) or designee, has the right to inspect the home or alternate work site and equipment to be used by an employee to ensure that proposed work space is safe, and all equipment is adequately installed and performing properly.

e. The Telework agreement between employee and supervisor may be terminated at the discretion of the supervisor.

f. The Telework arrangement shall be for the performance of official duties and shall not be treated as an opportunity to conduct personal business.

g. Each bureau/office may issue additional criteria in accordance with this Directive and with Treasury Publication TD P 74–14, Department of Treasury Telework Handbook, which provides additional general information and guidance regarding Telework programs. This manual is available through the Department's Office of Asset Management and the Office of the Deputy Assistant Secretary for Human Resources.

7. Authorities

a. Federal Employees Clean Air Incentives Act, (Pub. L. 103–172 (November 11, 1993).

b. Memorandum on Expanding Family-Friendly Work Arrangements in the Executive Branch, 30 Weekly Comp. Pres. Doc. 1468 (July 11, 1994).

c. Memorandum Implementing Federal Family Friendly Work Arrangements, 32 Weekly Comp. 1119 (June 21, 1996).

d. National Telecommuting Initiative Action Plan, (President's Management Council, January 1996).

8. Office of Primary Interest

Office of the Assistant Secretary for Management and Chief Financial Officer, Office of the Deputy Assistant Secretary (Human Resources), Office of the Deputy Assistant Secretary (Management Operations), and Office of Asset Management.

Lisa Ross,

Acting Assistant Secretary for Management and Chief Financial Officer.

[FR Doc. 00–27973 Filed 10–31–00; 8:45 am]

BILLING CODE 4810–25–P

DEPARTMENT OF THE TREASURY

Payments to Persons Who Hold Certain Categories of Judgments Against Cuba or Iran

AGENCY: Department of the Treasury; Departmental Offices.

ACTION: Notice.

SUMMARY: The Department of the Treasury is announcing that it will shortly prescribe procedures for making payments to persons who hold certain categories of judgments against Cuba or Iran.

FOR FURTHER INFORMATION CONTACT: Alexandra Edsall, Senior Advisor to the General Counsel, Department of the Treasury, 1500 Pennsylvania Avenue, NW., Room 3018, Washington, DC 20220, telephone (202) 622–2744 (not a toll-free call).

SUPPLEMENTARY INFORMATION: Section 2002 of the Victims of Trafficking and Violence Protection Act of 2000 directs the Secretary of the Treasury to make payments to persons who hold certain categories of judgments against Cuba or Iran in suits brought under 28 U.S.C. 1605(a)(7). Promptly after enactment, the Department of the Treasury will publish a notice in the **Federal Register** advising claimants what information must be provided in order to qualify for a payment under section 2002.

Dated: October 27, 2000.

Richard S. Carro,

Associate General Counsel.

[FR Doc. 00–28083 Filed 10–30–00; 10:58 am]

BILLING CODE 4810–25–M

Federal Register

Wednesday,
November 1, 2000

Part II

Department of Health and Human Services

Health Care Financing Administration

42 CFR Parts 410 and 414

Medicare Program; Revisions to Payment Policies Under the Physician Fee Schedule for Calendar Year 2001; Final Rule

DEPARTMENT OF HEALTH AND HUMAN SERVICES

Health Care Financing Administration

42 CFR Parts 410 and 414

[HCFA–1120–FC]

RIN 0938–AK11

Medicare Program; Revisions to Payment Policies Under the Physician Fee Schedule for Calendar Year 2001

AGENCY: Health Care Financing Administration (HCFA), HHS.

ACTION: Final rule with comment period.

SUMMARY: This final rule with comment period makes several changes affecting Medicare Part B payment. The changes include: refinement of resource-based practice expense relative value units (RVUs); the geographic practice cost indices; resource-based malpractice RVUs; critical care RVUs; care plan oversight and physician certification and recertification for home health services; observation care codes; ocular photodynamic therapy and other ophthalmological treatments; electrical bioimpedance; antigen supply; and the implantation of ventricular assist devices. This rule also addresses the comments received on the May 3, 2000 interim final rule on the supplemental survey criteria and makes modifications to the criteria for data submitted in 2001. Based on public comments we are withdrawing our proposals related to the global period for insertion, removal, and replacement of pacemakers and cardioverter defibrillators and low intensity ultrasound. This final rule also discusses or clarifies the payment policy for incomplete medical direction, pulse oximetry services, outpatient therapy supervision, outpatient therapy caps, HCPCS ''G'' Codes, and the second 5-year refinement of work RVUs for services furnished beginning January 1, 2002. In addition, we are finalizing the calendar year (CY) 2000 interim physician work RVUs and are issuing interim RVUs for new and revised codes for CY 2001. We are making these changes to ensure that our payment systems are updated to reflect changes in medical practice and the relative value of services. This final rule also announces the CY 2001 Medicare physician fee schedule conversion factor under the Medicare Supplementary Medical Insurance (Part B) program as required by section 1848(d) of the Social Security Act. The 2001 Medicare physician fee schedule conversion factor is $38.2581.

DATES: *Effective date:* This rule is effective January 1, 2001.

Comment date: Comments on interim RVUs for selected procedure codes identified in Addendum C and on interim practice expense RVUs and malpractice RVUs for all codes as shown in Addendum B will be considered if we receive them at the appropriate address, as provided below, no later than 5 p.m. on January 2, 2001.

ADDRESSES: Mail written comments (1 original and 3 copies) to the following address only: Health Care Financing Administration, Department of Health and Human Services, Attention: HCFA–1120–FC, P.O. Box 8013, Baltimore, MD 21244–8013.

Please allow sufficient time for mailed comments to be timely received in the event of delivery delays. If you prefer, you may deliver your written comments by courier (1 original and 3 copies) to one of the following addresses:

Room 443–G, Hubert H. Humphrey Building, 200 Independence Avenue, SW., Washington, DC 20201 or Room C5–14–03, 7500 Security Boulevard, Baltimore, MD 21244.

Comments mailed to the two above addresses may be delayed and received too late to be considered. Because of staff and resource limitations, we cannot accept comments by facsimile (FAX) transmission. In commenting, please refer to file code HCFA–1120–FC. Comments received timely will be available for public inspection as they are received, generally beginning approximately 3 weeks after publication of a document, in Room 443–G of the Department's office at 200 Independence Avenue, SW., Washington, DC, on Monday through Friday of each week from 8:30 to 5 p.m. (phone: (202) 690–7890).

FOR FURTHER INFORMATION CONTACT: Carolyn Mullen, (410) 786–4589 or Marc Hartstein, (410) 786–4539, (for issues related to resource-based practice expense relative value units).

Kenneth Marsalek, (410) 786–4502 (for issues related to supplemental practice expense survey data).

Bob Ulikowski, (410) 786–5721 (for issues related to resource-based malpractice relative value units and geographic practice cost index changes).

Rick Ensor, (410) 786–5617 (for issues related to care plan oversight and physician certification/recertification).

Cathleen Scally, (410) 786–5714 (for issues related to observation care codes).

Jim Menas, (410) 786–4507 (for issues related to incomplete medical direction and the 5-year review).

Roberta Epps, (410) 786–4503 (for issues related to outpatient/therapy).

Marc Hartstein, (410) 786–4539 (for issues related to the physician fee schedule update, the sustainable growth rate, the conversion factor, and the regulatory impact analysis).

Diane Milstead, (410) 786–3355 (for all other issues).

SUPPLEMENTARY INFORMATION:

Copies: To order copies of the **Federal Register** containing this document, send your request to: New Orders, Superintendent of Documents, P.O. Box 371954, Pittsburgh, PA 15250–7954. Specify the date of the issue requested and enclose a check or money order payable to the Superintendent of Documents, or enclose your Visa, Discover, or Master Card number and expiration date. Credit card orders can also be placed by calling the order desk at (202) 512–1800 or by faxing to (202) 512–2250. The cost for each copy is $8. As an alternative, you can view and photocopy the **Federal Register** document at most libraries designated as Federal Depository Libraries and at many other public and academic libraries throughout the country that receive the **Federal Register**.

To order the disks containing this document, send your request to: Superintendent of Documents, Attention: Electronic Products, P.O. Box 37082, Washington, DC 20013–7082. Please specify, ''Medicare Program; Revisions to Payment Policies Under the Physician Fee Schedule for Calendar Year 2001,'' and enclose a check or money order payable to the Superintendent of Documents, or enclose your VISA, Discover, or MasterCard number and expiration date. Credit card orders can be placed by calling the order clerk at (202) 512–1530 (or toll free at 1–888–293–6498) or by faxing to (202) 512–1262. The cost of the four disks is $25.

This **Federal Register** document is also available from the **Federal Register** online database through GPO Access, a service of the U.S. Government Printing Office. The Website address is: http://www.access.gpo.gov/nara/index.html.

Information on the physician fee schedule can be found on our homepage. You can access this data by using the following directions:

1. Go to the HCFA homepage (http://www.hcfa.gov).
2. Click on ''Medicare.''
3. Click on ''Professional/Technical Information.''
4. Select Medicare Payment Systems.
5. Select Physician Fee Schedule.

Or, you can go directly to the Physician Fee Schedule page by typing the following: http://www.hcfa.gov/medicare/pfsmain.htm.

To assist readers in referencing sections contained in this preamble, we are providing the following table of contents. Some of the issues discussed in this preamble affect the payment policies but do not require changes to the regulations in the Code of Federal Regulations. Information on the regulations impact appears throughout the preamble and is not exclusively in section X.

Table of Contents

I. Background
A. Legislative History
B. Published Changes to the Fee Schedule
C. Components of the Fee Schedule Payment Amounts
D. Development of the Relative Value Units
II. Specific Proposals for Calendar Year 2001
A. Resource-Based Practice Expense Relative Value Units
B. Geographic Practice Cost Index Changes
C. Resource-Based Malpractice Relative Value Units
D. Critical Care Relative Value Units
E. Care Plan Oversight and Physician Certification/Recertification
F. Observation Care Codes
G. Ocular Photodynamic Therapy and Other Ophthalmological Treatments
H. Electrical Bioimpedance
I. Global Period for Insertion, Removal, and Replacement of Pacemakers and Cardioverter Defibrillators
J. Antigen Supply
K. Low Intensity Ultrasound
L. Implantation of Ventricular Assist Devices
III. Other Issues
A. Incomplete Medical Direction
B. Payment for Pulse Oximetry Services
C. Outpatient Therapy Supervision
D. Outpatient Therapy Caps
E. HCPCS G Codes
F. Work RVUs in the Proposed Rule
G. Five-Year Refinement of Relative Value Units
IV. Refinement of Relative Value Units for Calendar Year 2001 and Response to Public Comments on Interim Relative Value Units for 2000 (Including the Interim Relative Value Units Contained in the July 2000 Proposed Rule)
A. Summary of Issues Discussed Related to the Adjustment of Relative Value Units
B. Process for Establishing Work Relative Value Units for the 2001 Physician Fee Schedule and Clarification of CPT Definitions
C. Other Changes to the 2001 Physician Fee Schedule and Clarification of CPT Definitions
V. Physician Fee Schedule Update and Conversion Factor for Calendar Year 2001
VI. Allowed Expenditures for Physicians' Services and the Sustainable Growth Rate
A. Medicare Sustainable Growth Rate
B. Physicians' Services
C. Provisions Related to the SGR
D. Preliminary Estimate of the SGR for 2001
E. Sustainable Growth Rate for CY 2000
F. Sustainable Growth Rate for FY 2000
G. Calculation of the FY 2000, CY 2000, and CY 2001 Sustainable Growth Rates
VII. Provisions of the Final Rule
VIII. Collection of Information Requirements
IX. Response to Comments
X. Regulatory Impact Analysis
A. Resource-Based Practice Expense Relative Value Units
B. Geographic Practice Cost Index Changes
C. Resource-Based Malpractice Relative Value Units
D. Critical Care Relative Value Units
E. Care Plan Oversight and Physician Certification/Recertification
F. Observation Care Codes
G. Ocular Photodynamic Therapy and Other Ophthalmological Treatments
H. Electrical Bioimpedance
I. Global Period for Insertion, Removal, and Replacement of Pacemakers and Cardioverter Defibrillators
J. Antigen Supply
K. Increased Space Allotment in Physical Therapy Salary Equivalency Guidelines
XI. Federalism
Addendum A—Explanation and Use of Addendum B
Addendum B—2001 Relative Value Units and Related Information Used in Determining Medicare Payments for 2001
Addendum C—Codes with Interim RVUs
Addendum D—2002 Geographic Practice Cost Indices by Medicare Carrier and Locality
Addendum E—2001 Geographic Practice Cost Indices by Medicare Carrier and Locality
Addendum F—Proposed 2002 Versus 1999 Geographic Adjustment Factors (GAF)
Addendum G—Malpractice

In addition, because of the many organizations and terms to which we refer by acronym in this final rule, we are listing these acronyms and their corresponding terms in alphabetical order below:

AMA American Medical Association
BBA Balanced Budget Act of 1997
BBRA Balanced Budget Refinement Act of 1999
CF Conversion factor
CFR Code of Federal Regulations
CPT [Physicians'] Current Procedural Terminology [4th Edition, 1997, copyrighted by the American Medical Association]
CPEP Clinical Practice Expert Panel
CRNA Certified Registered Nurse Anesthetist
E/M Evaluation and management
EB Electrical bioimpedance
FMR Fair market rental
GAF Geographic adjustment factor
GPCI Geographic practice cost index
HCFA Health Care Financing Administration
HCPCS HCFA Common Procedure Coding System
HHA Home health agency
HHS [Department of] Health and Human Services
IDTFs Independent Diagnostic Testing Facilities
MCM Medicare Carrier Manual
MedPAC Medicare Payment Advisory Commission
MEI Medicare Economic Index
MGMA Medical Group Management Association
MSA Metropolitan Statistical Area
NAMCS National Ambulatory Medical Care Survey
OBRA Omnibus Budget Reconciliation Act
PC Professional component
PEAC Practice Expense Advisory Committee
PPAC Practicing Physicians Advisory Council
PPS Prospective payment system
RUC [AMA's Specialty Society] Relative [Value] Update Committee
RVU Relative value unit
SGR Sustainable growth rate
SMS [AMA's] Socioeconomic Monitoring System
TC Technical component

I. Background

A. Legislative History

Since January 1, 1992, Medicare has paid for physicians' services under section 1848 of the Social Security Act (the Act), ''Payment for Physicians' Services.'' This section contains three major elements—(1) a fee schedule for the payment of physicians' services; (2) a sustainable growth rate for the rates of increase in Medicare expenditures for physicians' services; and (3) limits on the amounts that nonparticipating physicians can charge beneficiaries. The Act requires that payments under the fee schedule be based on national uniform relative value units (RVUs) based on the resources used in furnishing a service. Section 1848(c) of the Act requires that national RVUs be established for physician work, practice expense, and malpractice expense.

Section 1848(c)(2)(B)(ii)(II) of the Act provides that adjustments in RVUs may not cause total physician fee schedule payments to differ by more than $20 million from what they would have been had the adjustments not been made. If adjustments to RVUs cause expenditures to change by more than $20 million, we must make adjustments to the conversion factors (CFs) to preserve budget neutrality.

B. Published Changes to the Fee Schedule

In the July 2000 proposed rule (65 FR 44177), we listed all of the final rules published through November 1999, relating to the updates to the RVUs and revisions to payment policies under the physician fee schedule. In the July 2000 proposed rule (65 FR 44176), we discussed several issues affecting Medicare payment for physicians' services, including:

Refinement of resource-based practice expense RVUs;

- Changes to the geographic practice cost indices;
- Resource-based malpractice RVUs;
- Critical care RVUs;
- Care plan oversight and physician certification/recertification;
- Observation care codes;
- Ocular photodynamic therapy and other ophthalmological treatments;
- Electrical bioimpedance;
- The global period for insertion, removal, and replacement of pacemakers and cardioverter defibrillators;
- Antigen supply;
- Low intensity ultrasound; and
- The implantation of ventricular assist devices.

This proposed rule also discussed or clarified the payment policy for incomplete medical direction, pulse oximetry services, outpatient therapy supervision, outpatient therapy caps, and the second 5-year refinement of work RVUs for services furnished beginning January 1, 2002.

This final rule affects the regulations set forth at part 410, Supplementary medical insurance (SMI) benefits and part 414, Payment for Part B medical and other services.

The information in this final rule updates information in the July 2000 proposed rule and the May 3, 2000 interim final rule with comment period (65 FR 25664) discussed later.

C. Components of the Fee Schedule Payment Amounts

Under the formula set forth in section 1848(b)(1) of the Act, the payment amount for each service paid under the physician fee schedule is the product of three factors—(1) a nationally uniform relative value for the service; (2) a geographic adjustment factor (GAF) for each physician fee schedule area; and (3) a nationally uniform CF for the service. The CF converts the relative values into payment amounts.

For each physician fee schedule service, there are three relative values—(1) an RVU for physician work; (2) an RVU for practice expense; and (3) an RVU for malpractice expense. For each of these components of the fee schedule there is a geographic practice cost index (GPCI) for each fee schedule area. The GPCIs reflect the relative costs of practice expenses, malpractice insurance, and physician work in an area compared to the national average for each component.

The general formula for calculating the Medicare fee schedule amount for a given service in a given fee schedule area can be expressed as:

Payment = [(RVU work × GPCI work) + (RVU practice expense × GPCI practice expense) + (RVU malpractice × GPCI malpractice)] × CF

The CF for CY 2001 appears in section V. The RVUs for CY 2001 are in Addendum B. The GPCIs for CY 2001 can be found in Addendum E.

Section 1848(e) of the Act requires us to develop GAFs for all physician fee schedule areas. The total GAF for a fee schedule area is equal to a weighted average of the individual GPCIs for each of the three components of the service. Thus, the GPCIs reflect the relative practice expenses, malpractice insurance, and physician work in an area compared to the national average. In accordance with the statute, however, the GAF for the physician's work reflects one-quarter of the relative cost of physician's work compared to the national average.

D. Development of the Relative Value Units

1. Work Relative Value Units

Approximately 7,500 codes represent services included in the physician fee schedule. The work RVUs established for the implementation of the fee schedule in January 1992 were developed with extensive input from the physician community. A research team at the Harvard School of Public Health developed the original work RVUs for most codes in a cooperative agreement with us. In constructing the vignettes for the original RVUs, Harvard worked with panels of expert physicians and obtained input from physicians from numerous specialties.

The RVUs for radiology services were based on the American College of Radiology (ACR) relative value scale, which we integrated into the overall physician fee schedule. The RVUs for anesthesia services were based on RVUs from a uniform relative value guide. We established a separate CF for anesthesia services while we continue to recognize time as a factor in determining payment for these services. As a result, there is a separate payment system for anesthesia services.

2. Practice Expense and Malpractice Expense Relative Value Units

Section 121 of the Social Security Act Amendments of 1994 (Pub. L. No. 103–432), enacted on October 31, 1994, required us to develop a methodology for a resource-based system for determining practice expense RVUs for each physician service. As amended by the Balanced Budget Act of 1997 (BBA) (Pub. L. No. 105–33), section 1848(c) required the new payment methodology to be phased in over 4 years, effective for services furnished in 1999, with resource-based practice expense RVUs becoming fully effective in 2002. The BBA also requires us to implement resource-based malpractice RVUs for services furnished beginning in 2000.

II. Specific Proposals for Calendar Year 2001

In response to the publication of the July 2000 proposed rule, we received approximately 600 comments. We received comments from individual physicians, health care workers, and professional associations and societies. The majority of comments addressed the proposals related to practice expense, observation care, antigen supplies, care plan oversight, and certification and recertification of home health services.

The proposed rule discussed policies that affected the number of RVUs on which payment for certain services would be based. Certain changes implemented through this final rule are subject to the $20 million limitation on annual adjustments contained in section 1848(c)(2)(B)(ii)(II) of the Act.

After reviewing the comments and determining the policies we would implement, we have estimated the costs and savings of these policies, and added those costs and savings to the estimated costs associated with any other changes in RVUs for 2001. We discuss in detail the effects of these changes in the Regulatory Impact Analysis (section X).

For the convenience of the reader, the headings for the policy issues correspond to the headings used in the July 2000 proposed rule. More detailed background information for each issue can be found in the May 2000 interim final rule with comment period and the July 2000 proposed rule.

A. Resource-Based Practice Expense Relative Value Units

1. Resource-Based Practice Expense Legislation

Section 121 of the Social Security Act Amendments of 1994 (Pub. L. No. 103–432), enacted on October 31, 1994, required us to develop a methodology for a resource-based system for determining practice expense RVUs for each physician's services beginning in 1998. In developing the methodology, we were to consider the staff, equipment, and supplies used in furnishing medical and surgical services in various settings. The legislation specifically required that, in implementing the new system of practice expense RVUs, we must apply the same budget-neutrality provisions

that we apply to other adjustments under the physician fee schedule.

Section 4505(a) of the BBA delayed the effective date of the resource-based practice expense RVU system until January 1, 1999. In addition, section 4505(b) of the BBA provided for a 4-year transition period from charge-based practice expense RVUs to resource-based RVUs. The practice expense RVUs for CY 1999 were the product of 75 percent of charge-based RVUs and 25 percent of the resource-based RVUs. For CY 2000, the RVUs were 50 percent charge-based and 50 percent resource-based. For CY 2001, the RVUs are 25 percent charge-based and 75 percent resource-based. After CY 2001, the RVUs will be totally resource-based.

Section 4505(e) of the BBA provided that, in 1998, the practice expense RVUs would be adjusted for certain services in anticipation of the implementation of resource-based practice expenses beginning in 1999. As a result, we increased practice expense RVUs for office visits. For other services in which practice expense RVUs exceeded 110 percent of the work RVUs and were furnished less than 75 percent of the time in an office setting, we reduced the 1998 practice expense RVUs to a number equal to 110 percent of the work RVUs. This limitation did not apply to services that had proposed resource-based practice expense RVUs that increased from their 1997 practice expense RVUs as reflected in the June 18, 1997 proposed rule (62 FR 33196). The services affected, and the final RVUs for 1998, were published in the October 1997 final rule (62 FR 59103).

The most recent legislation affecting resource-based practice expense was included in the Balanced Budget Refinement Act of 1999 (BBRA) (Pub. L. No. 106–113). Section 212 of the BBRA stated that we must establish a process under which we accept and use, to the maximum extent practicable and consistent with sound data practices, data collected or developed by entities and organizations. These data would supplement the data we normally collect in determining the practice expense component of the physician fee schedule for payments in CY 2001 and CY 2002.

2. Current Methodology for Computing Practice Expense Relative Value Unit System

Effective with services on or after January 1, 1999, we established a new methodology for computing resource-based practice expense RVUs that used the two significant sources of actual practice expense data we have available: the Clinical Practice Expert Panel (CPEP) data and the AMA's Socioeconomic Monitoring System (SMS) data. The methodology is based on an assumption that current aggregate specialty practice costs are a reasonable way to establish initial estimates of relative resource costs of physicians' services across specialties. It then allocates these aggregate specialty practice costs to specific procedures and, thus, can be considered as a ''top-down'' approach. The methodology can be summarized as follows:

a. Practice Expense Cost Pools. We used actual practice expense data by specialty, derived from the 1995 through 1997 SMS survey data, to create six cost pools—administrative labor, clinical labor, medical supplies, medical equipment, office supplies, and all other expenses. There were three steps in the creation of the cost pools.

- Step (1) We used the AMA's SMS survey of actual cost data to determine practice expenses per hour by cost category. The practice expenses per hour for each physician respondent's practice was calculated as the practice expenses for the practice divided by the total number of hours spent in patient care activities. The practice expenses per hour for the specialty were an average of the practice expenses per hour for the respondent physicians in that specialty. In addition, for the CY 2000 physician fee schedule, we used data from a survey submitted by the Society of Thoracic Surgeons (STS) in calculating thoracic and cardiac surgery's practice expense per hour. (See the November 1999 final rule (64 FR 59391) for additional information concerning acceptance of this data.)
- Step (2) We determined the total number of physician hours (by specialty) spent treating Medicare patients. This was calculated from physician time data for each procedure code and from Medicare claims data.
- Step (3) We calculated the practice expense pools by specialty and by cost category by multiplying the specialty practice expenses per hour for each category by the total physician hours.

For services with work RVUs equal to zero (including the technical component (TC) of services with a TC and professional component (PC)), we created a separate practice expense pool, using the average clinical staff time from the CPEP data (since these codes by definition do not have physician time), and the ''all physicians'' practice expense per hour.

b. Cost Allocation Methodology. For each specialty, we separated the six practice expense pools into two groups and used a different allocation basis for each group.

(i) Direct Costs

For direct costs (including clinical labor, medical supplies, and medical equipment), we used the CPEP data as the allocation basis. The CPEP data for clinical labor, medical supplies, and medical equipment were used to allocate the clinical labor, medical supplies, and medical equipment cost pools, respectively.

For the separate practice expense pool for services with work RVUs equal to zero, we used 1998 practice expense RVUs to allocate the direct cost pools (clinical labor, medical supplies, and medical equipment cost pools) as an interim measure. Also, for all radiology services that are assigned work RVUs, we used the 1998 practice expense relative values for radiology services as an interim measure to allocate the direct practice expense cost pool for radiology. For all other specialties that perform radiology services, we used the CPEP data for radiology services in the allocation of that specialty's direct practice expense cost pools.

(ii) Indirect Costs

To allocate the cost pools for indirect costs, including administrative labor, office expenses, and all other expenses, we used the total direct costs, as described above, in combination with the physician fee schedule work RVUs. We converted the work RVUs to dollars using the Medicare CF (expressed in 1995 dollars for consistency with the SMS survey years).

The SMS pool was divided by the CPEP pool for each specialty to produce a scaling factor that was applied to the CPEP direct cost inputs. This was intended to match costs counted as practice expenses in the SMS survey with items counted as practice expenses in the CPEP process. When the specialty-specific scaling factor exceeds the average scaling factor by more than three standard deviations, we used the average scaling factor. (See the November 1999 final rule (64 FR 59390) for further discussion of this issue).

For procedures performed by more than one specialty, the final procedure code allocation was a weighted average of allocations for the specialties that perform the procedure, with the weights being the frequency with which each specialty performs the procedure on Medicare patients.

c. Other Methodological Issues.

(i) Global Practice Expense Relative Value Units

For services with the PC and TC paid under the physician fee schedule, the global practice expense RVUs were set equal to the sum of the PC and TC.

(ii) Practice Expenses per Hour Adjustments and Specialty Crosswalks

Since many specialties identified in our claims data did not correspond exactly to the specialties included in the practice expense tables from the SMS survey data, it was necessary to crosswalk these specialties to the most appropriate SMS specialty category. We also made the following adjustments to the practice expense per hour data. (For the rationale for these adjustments to the practice expense per hour see the November 1998 final rule (63 FR 58841).)

- We set the medical materials and supplies practice expenses per hour for the specialty of ''oncology'' equal to the ''all physician'' medical materials and supplies practice expenses per hour.
- We based the administrative payroll, office, and other practice expenses per hour for the specialties of ''physical therapy'' and ''occupational therapy'' on data used to develop the salary equivalency guidelines for these specialties. We set the remaining practice expense per hour categories equal to the ''all physician'' practice expenses per hour from the SMS survey data.
- Due to uncertainty concerning the appropriate crosswalk and time data for the nonphysician specialty ''audiologist,'' we derived the resource-based practice expense RVUs for codes performed by audiologists from the practice expenses per hour of the other specialties that perform these codes.
- For the specialty of ''emergency medicine,'' we used the ''all physician'' practice expense per hour to create practice expense cost pools for the categories ''clerical payroll'' and ''other expenses.''
- For the specialty of ''podiatry,'' we used the ''all physician'' practice expense per hour to create the practice expense pool.
- For the specialty of ''pathology,'' we removed the supervision and autopsy hours reimbursed through Part A of the Medicare program from the practice expense per hour calculation.
- For the specialty ''maxillofacial prosthetics,'' we used the ''all physician'' practice expense per hour to create practice expense cost pools and, as an interim measure, allocated these pools using the 1998 practice expense RVUs.
- We split the practice expenses per hour for the specialty ''radiology'' into ''radiation oncology'' and ''radiology other than radiation oncology'' and used this split practice expense per hour to create practice expense cost pools for these specialties.

(iii) Time Associated with the Work RVUs

The time data resulting from the refinement of the work RVUs have been, on average, 25 percent greater than the time data obtained by the Harvard study for the same services. We increased the Harvard research team's time data to ensure consistency between these data sources.

For services with no assigned physician time (such as, dialysis, physical therapy, psychology, and many radiology and other diagnostic services), we calculated estimated total physician time based on work RVUs, maximum clinical staff time for each service as shown in the CPEP data, or the judgment of our clinical staff.

We calculated the time for CPT codes 00100 through 01996, using the base and time units from the anesthesia fee schedule and the Medicare allowed claims data.

3. Refinement

a. Background

Section 4505(d)(1)(C) of the BBA required us to develop a refinement process to be used during each of the 4 years of the transition period. We did not propose a specific long-term refinement process in the June 1998 proposed rule (63 FR 30835). Rather, we set out the parameters for an acceptable refinement process for practice expense RVUs and solicited comments on our proposal. We received a large variety of comments about broad methodology issues, practice expense per hour data, and detailed code level data. We made some adjustments to our proposal when we were convinced an adjustment was appropriate. We also indicated that we would consider other comments for possible refinement and that the values of all codes would be considered interim for 1999 and for future years during the transition period.

We outlined in the November 1998 final rule (63 FR 58832) the steps we were undertaking as part of the initial refinement process. These steps included—

- Establishment of a mechanism to receive independent advice for dealing with broad practice expense RVU technical and methodological issues;
- Evaluation of any additional recommendations from the General Accounting Office, the Medicare Payment Advisory Commission (MedPAC), and the Practicing Physicians Advisory Council (PPAC); and
- Consultation with physician groups and other groups concerning these issues.

We also discussed a proposal submitted by the AMA's Specialty Society Relative Value Update Committee (RUC) for development of a new advisory committee, the Practice Expense Advisory Committee (PEAC), to review comments and recommendations on the code-specific CPEP data during the refinement period. In addition, we solicited comments and suggestions about our practice expense methodology from organizations that have a broad range of interests and expertise in practice expense and survey issues.

In the July 22, 1999 proposed rule, the November 1999 final rule, and the July 2000 proposed rule, we provided further information on refinement activities underway, including the recommendations from the PEAC and the support contract that we awarded to focus on methodologic issues. The following is an update on activities with respect to these initiatives, as well as the status of refinement with respect to other areas of concern such as the SMS data and CPEP inputs.

b. SMS Data

We have received many comments on both our 1998 and 1999 proposed and final rules from a number of medical specialty societies expressing concerns regarding the accuracy of the SMS data. Some commenters stated their belief that the sample size for their specialty was not large enough to yield reliable data. Other specialties not represented in the SMS survey objected that the crosswalk used for their practice expense per hour was not appropriate and requested that their own data be used instead. Commenters also raised questions about whether the direct patient care hours for their specialty were overstated by the SMS to the specialty's disadvantage.

We consider dealing with these issues to be one of the major priorities of the refinement effort. Therefore, we have undertaken the following activities:

(i) Interim Final Rule on Supplemental Practice Expense Survey Data

On May 3, 2000, we published an interim final rule (65 FR 25664) that set forth the criteria for physician and non-physician specialty groups to submit supplemental practice expense survey data for use in determining payments under the physician fee schedule. Section 212 of the BBRA amended section 1848(c) of the Act to require us to establish a process under which we will accept and use, to the maximum extent practicable and consistent with sound data practices, data collected or developed by entities and organizations. These data will supplement the data we

normally collect in determining the practice expense component of the physician fee schedule for payments in CY 2001 and CY 2002.

To obtain data that could be used in computing practice expense RVUs beginning January 1, 2001, we published the criteria in the May 2000 interim final rule (65 FR 25666) that we will apply to supplemental survey data submitted to us by August 1, 2000. We also provided a 60-day period for submission of comments on the criteria that we will consider for survey data submitted between August 2, 2000 and August 1, 2001 for use in computing the practice expense RVUs for the CY 2002 physician fee schedule. (See the May 2000 interim final rule for further information on the criteria and process). We are responding to comments received on the interim final rule in this rule, and are publishing the criteria to be used for 2001 submission.

The following are specific criteria and discussion in the May 2000 interim final rule.

- Physician groups must draw their sample from the AMA Physician Masterfile to ensure a nationally representative sample that includes both members and non-members of a physician specialty group.
- Physician groups must arrange for the AMA to send the sample directly to their survey contractor to ensure confidentiality of the sample; that is, to ensure comparability in the methods and data collected, specialties must not know the names of the specific individuals in the sample.
- Non-physician specialties not included in the AMA's SMS must develop a method to draw a nationally representative sample of members and non-members. At a minimum, these groups must include former members in their survey sample. The sample must be drawn by the non-physician group's survey contractor, or another independent party, in a way that ensures the confidentiality of the sample; that is, to ensure comparability in the methods and data collected, specialties must not know the names of the specific individuals in the sample.
- A group (or its contractors) must conduct the survey based on the SMS survey instruments and protocols, including administration and follow-up efforts, and definitions of practice expense and hours in patient care. In addition, any cover letters or other information furnished to survey sample participants must be comparable to such information previously supplied by the SMS contractor to its sample participants.
- A group must use a contractor that has experience with the SMS or a survey firm with experience successfully conducting national multi-specialty surveys of physicians using nationally representative random samples.
- A group must submit raw survey data to us, including all complete and incomplete survey responses as well as any cover letters and instructions that accompanied the survey, by August 1, 2000 for data analysis and editing to ensure consistency. All personal identifiers in the raw data must be eliminated. (Send data to Health Care Financing Administration, Department of Health and Human Services, Attn: Kenneth Marsalek, C4–03–06, 7500 Security Boulevard, Baltimore, MD 21244–8013.)
- Raw survey data submitted to us between August 2, 2000 and August 1, 2001 will be considered for use in computing practice expense RVUs for CY 2002.
- The physician practice expense data from surveys that we use in our code-level practice expense calculations are the practice expenses per physician hour in the six practice expense categories—clinical labor, medical supplies, medical equipment, administrative labor, office overhead, and other. Supplemental survey data must include data for these categories. Ideally, we would like to calculate practice expense values with precision; however, we recognize that we must achieve a balance. Conducting surveys is expensive, and there is a tension between achieving large sample sizes, which increases precision, and smaller ones, which conserves costs.

In addition, in the May 2000 interim final rule (65 FR 25666) we indicated that we believed an achievable level of precision is a coefficient of variation, that is, the ratio of the standard error of the mean to the mean expressed as a percent, not greater than 10 percent, for overall practice expenses or practice expenses per hour. For existing surveys the standard deviation is frequently the same magnitude as the mean. If the standard deviation equals the mean, then a usable sample size of 100 will yield a coefficient of variation of 10 percent. For small, homogeneous subspecialties, the variations in practice expenses may be lower because a smaller sample size achieves this level of precision. Other ways of expressing precision (for example, 95 percent confidence intervals) are also acceptable if they are approximately equivalent to a coefficient of variation of 10 percent or better. We indicated that will consider surveys for which the precision of the practice expenses are equal to or better than this level of precision and that meet the other survey criteria. Also, we indicated that we will require documentation regarding how the practice expenses were calculated and we will verify the calculations. We have the statutory authority, however, to determine the final practice expense RVUs.

We also indicated that, since the physician fee schedule is a national fee schedule, we would require that the survey be representative of the target population of physicians nationwide. We can presume national representativeness if a random sample is drawn from a complete nationwide listing of the physician specialty or subspecialty and the response rate, the percent of usable responses received from the sample, is high, for example, 80 to 90 percent. If any of these conditions (random sample, complete nationwide listing, and high response rate) are not achieved, then the potential impacts of the deviations upon national representativeness must be explored and documented. For example, if the response rate is low, then justification must be furnished to demonstrate that the responders are not significantly different from non-responders with regard to factors affecting practice expense. Differential weighting of subsamples may improve the representativeness. Minor deviations from national representativeness may be acceptable.

Comments on Criteria for Submitting Supplemental Practice Expense Data

We received comments from 17 specialty groups concerning the criteria for the acceptance of supplemental data. While many of these comments contained positive feedback on aspects of our interim final rule, they all contained statements of opposition to specific requirements and/or suggestions for improving the process. Outlined below are the comments from specialty groups and our responses concerning the requirements for supplemental survey data.

Required Sampling From the AMA's Physician Masterfile

Comment: Four groups stated that the requirement for survey respondents to be drawn solely from the AMA Physician Masterfile is inappropriate for the specialties of radiology and radiation oncology. They believe that hospital-based radiologists and radiation oncologists do not encounter the same practice expenses for staff and supplies as those radiologists and radiation oncologists working in

freestanding centers. According to the groups, radiologists and radiation oncologists working in a freestanding center encounter capital intensive TC services not incurred by hospital-based physicians and, often, these TC component costs are borne by non-physician entities not included in the Physician Masterfile. The groups also believe that the small number of radiologists and radiation oncologists who own and operate a freestanding center will not be represented in a sample from the Physician Masterfile. The groups suggest that we work with the professional community to develop a list of freestanding radiation centers from which we could extract a geographically diverse sample. Alternatively, the groups suggest that, because of potential low response rates, we include all radiation practices in the survey sample and use the data for those physicians not working at freestanding centers only in the calculation of PC services.

One group expressed concern that by sampling from the AMA Physician Masterfile, a substantial number of emergency medicine practices are overlooked. The small number of physician practice owners leads to a strong possibility that these owners will not be selected in the random sample. They suggest that we permit an additional sample of large emergency medicine practice groups to supplement the current survey.

Response: The Physician Masterfile is the most extensive list of physicians in the United States, and, therefore, we believe it is the most appropriate list from which to develop a random sample of physicians within a specialty. Currently, we are not aware of a complete list of radiation and radiation oncology practices or emergency medicine practice groups that exists that is more comprehensive than the Physician Masterfile with the information necessary to extract a representative random sample. If such a list were to exist or be developed in the future, we would consider the appropriateness and potential uses for sampling. We would welcome information from physician and other organizations on specific data sources from which representative samples of physicians could be selected, if there is concern that the AMA Masterfile is not a comprehensive list for the specialty.

Comment: One group commented that the AMA Physician Masterfile may contain ''self-designated'' dermatologists who do not meet the criteria for ''qualified'' dermatologists. They defined ''qualified'' dermatologists as board certified dermatologists, associates and affiliate members such as osteopathic dermatologists, physicians conducting research in dermatology, and practicing dermatologists certified by a foreign board but now practicing in the United States. According to the group, other, ''self-designated'' dermatologists should not be included in the sample for dermatology because their practice expense data could be unrepresentative and potentially damaging to the practice expense RVUs for dermatology.

Response: Self-designation of specialty is not unique to dermatologists. In the Physician Masterfile, all specialties are based on self-designation. The SMS survey deals with the issue of self-designation by asking respondents if their specialty designation is representative of the specialty practice from which they gain the majority of their medical income. It is important to note that if any physician who is self-designated as a dermatologist furnishes dermatological services to Medicare patients, it is appropriate for this physician to be included in the sample because this physician receives income for dermatological services.

Comment: Three groups suggested that the requirement to sample from the Physician Masterfile may not be reasonable, as it serves only to limit specialties' ability to present alternative data to us. They noted that the requirement to sample from the Physician Masterfile is based on the assumption that physicians outside of the specialty group have different costs than members of the group. One commenter maintained that the substantial variance in practice expenses within members' practices makes it unlikely that non-members' practices would extend this variance. In addition, one group suggested that societies representing a smaller proportion of specialty practitioners should be allowed to explore options for addressing potential bias beyond sampling from the Physician Masterfile. According to the group, nonmembers of a specialty society are unlikely to respond to what they consider a time-consuming and intrusive survey about sensitive financial issues.

Response: We believe that the commenter is arguing that is should be sufficient to draw a sample from the members of a specialty society because there is unlikely to be a difference in practice expense per hour between members and nonmembers of a specialty society. Our goal in collecting practice expense data is to create practice expense values that reflect the costs of both members and non-members of a specialty society. We cannot assume that the average practice expenses of members and non-members of a specialty group are comparable without data to support this finding. The AMA Physician Masterfile is the most comprehensive list of physicians practicing in the United States. A specialty society's members are likely to include only a portion of the physicians practicing in that specialty. Thus, we believe that it is likely that a random sample selected from the AMA Physician Masterfile is going to be more representative of a specialty than a sample drawn from a specialty society's membership list. For this reason, we are maintaining the requirement that the sample of physicians must be drawn from the AMA Physician Masterfile.

Required Use of SMS Survey Instruments and Protocol

Comment: One group expressed concern that the SMS survey does not account for care hours induced by the Emergency Treatment and Labor Act (EMTALA) in the patient care hours question, thereby overstating the hours and understating the practice expense costs. They recommend that a question be added to the SMS that asks respondents about the patient care hours they spend in an average week providing EMTALA-induced care. Each specialty's average amount of EMTALA-induced care should then be deducted from the total hours spent in patient care. The commenter recognized that this is a long-term recommendation and wished to work on an interim solution with us.

Response: We understand the group's concerns and have contracted with The Lewin Group to provide recommendations on both the modification of future surveys to account for EMTALA-induced patient care hours and the use of these data to adjust practice expense values. We have also made specific comments to the AMA requesting that this issue be addressed in any future work they may do with regard to collecting survey data. In the interim, we have made an adjustment to the practice expense per hour for emergency medicine to address this issue. We have no reason to believe emergency medicine is being disadvantaged in the interim as a result of this adjustment. We will consider The Lewin Group's recommendations.

Comment: Six groups questioned the adequacy of the SMS survey for the purpose of accurately assessing a particular specialty's practice expenses. For example, one group believes that additional questions are needed to account for cardiology TC questions.

They recommend that we revise the criteria for supplemental surveys to allow for the collection of additional data through specialty-specific questions.

Response: We consider the SMS survey to be adequate for the purpose of accurately assessing practice expenses. However, we agree that additional clarification and examples tailored to specific specialties may improve the accuracy of the data collected. Although we do not want specialties to change the basic structure of the SMS practice expense module, we have not precluded any groups from collecting additional data specific to the specialty in their supplemental surveys.

Comment: One group suggested that we adopt the AMA's practice level Practice Expense survey in place of the SMS and revise the criteria for supplemental survey data accordingly. They also suggested that our references to the SMS survey may be misunderstood by specialty groups referencing the AMA's practice level survey instrument, and that we must clarify this distinction. Two groups recommended that the specialty groups should collect practice level data, rather than individual physician estimates. One group also suggested that a practice level survey should be developed to more appropriately capture the practice expenses.

Response: The AMA has fielded the practice expense level survey with minimal success. At this time, we understand that the AMA does not plan to continue with the practice expense level survey. We are currently using the physician level SMS as the basis for supplemental surveys, and will continue to use this survey to maintain consistency with our existing data. We cannot use the AMA's practice level survey, or any other survey, until it has been evaluated to determine if the survey data can be incorporated into our practice expense methodology. In addition, we would have to determine if it is possible to reconcile the outcomes of the physician level and practice level surveys. We have asked The Lewin Group to review the AMA's practice level survey to determine how the data collected could be used to calculate practice expenses per hour values.

Comment: Four groups requested that specialty groups be allowed to conduct the supplemental surveys by mail with follow-up phone interviews. The groups believe this will reduce the cost of administering a survey.

Response: As explained previously, to help obtain comparable data, we believe supplemental surveys should follow the SMS methodology.

Comment: Two groups expressed concern that requiring cover letters and other information furnished to survey participants to be comparable to those supplied by the SMS contractor will hamper response rates. They believe specialty groups should be able to provide correspondence that explains the importance of the data for the benefit of the specialty without our ''censorship.''

Response: Although specialty-specific correspondence may increase response rates, it could potentially introduce bias into the practice expense data. We believe that it is essential to obtain unbiased data.

Comment: One group suggested we use the tax form 1120 as a foundation for validating practice expense data. They suggested that independent accountants could be used to compare the practice expense data submitted to the actual expenses on the tax form.

Response: The Lewin Group has considered this recommendation and, after discussions with the AMA and numerous physician specialty groups, has determined that practitioners may not respond to the survey if they believe their data may be audited. However, The Lewin Group does believe that a closer link between the survey worksheet and a practice's tax forms may improve the accuracy of the data. We may consider this as a longer-term refinement issue.

Comment: One group recommended that we develop a workable alternative to the SMS survey. They noted the indefinite suspension of the SMS survey, and the lack of evidence that the SMS is the best source of obtaining practice expense data at the specialty level as reasons for their suggestion. They suggested we develop a set of core questions and standard definitions to be incorporated in each specialty's survey. If we create an alternative to the SMS, They requested that we take into account the extensive amount of time involved in designing and conducting an effective practice expense survey.

Response: The Lewin Group has already worked with specialty groups to modify the SMS survey for administration as a supplemental survey. The Lewin Group will continue to help specialty groups field supplemental surveys.

Comment: One group requested that we keep the specialty groups updated on the status of the SMS survey and any potential solutions or alternate plans we develop to account for the absence of new SMS data. They stated that keeping the specialties current would allow them to anticipate extra spending on survey projects.

Response: The best source of current information on the status of the SMS survey would, of course, be from the AMA. Any plans on our part would be included in information provided as part of future revisions to practice expenses.

Comments on the Response Rate

Comment: Seven groups objected to the response rate of 80 to 90 percent mentioned as a criterion for the presumed national representativeness of a sample. The groups stated that the SMS has never achieved a response rate this high, and that specialty groups should not be expected to achieve a response rate higher than that achieved by the SMS. Two groups suggested an acceptable response rate of 30 to 40 percent, and the American Academy of Ophthalmology (AAO) suggested an acceptable response rate of 30 percent. The ACR requested an acceptable response rate of no higher than 65 percent. Three groups objected to our response rate but did not suggest an alternative rate.

Response: The 80 to 90 percent response rate was presented as a rate at which we can presume that the sample is nationally representative, but not as an absolute requirement for the acceptance of data. As we stated in the May 3, 2000 interim final rule (65 FR 25666), we are attempting to be as reasonable as possible. However, surveys with a response rate lower than 80 percent cannot be assumed to be nationally representative, and, for us to accept these data, a specialty group must demonstrate that the survey respondents are not significantly different from non-respondents. In addition, based on our review of the supplemental surveys submitted, we are modifying our criteria concerning an acceptable level of precision for surveys. We now believe a reasonable level of precision for surveys to be used for supplementing current data is a 90-percent confidence interval with a range of plus or minus 10 percent of the mean (that is, 1.645 times the standard error of the mean, divided by the mean, should be equal to or less than 10 percent of the mean).

Comment: One group commented that it is highly unlikely that small specialties will be able to achieve the coefficient of variation of less than 10 percent for overall practice expenses or practice expenses per hour that we require for the acceptance of supplemental data. They note that the original SMS survey did not achieve this threshold for many small specialties and, therefore, question the application

of the requirement to supplemental surveys.

Response: In developing the resource-based practice expense RVUs, we consulted widely with physician groups, researchers, and others to identify possible data sources. Nearly all commenters agreed that the SMS data, while not specifically designed for the purpose of establishing practice expense RVUs, was the best available data for this purpose. We believe our criteria, as discussed above, help assure that any data used to supplement the SMS data are statistically valid and representative. Further, we believe these criteria are reasonable and achievable. For example, a specialty society for thoracic surgeons submitted supplemental data that we incorporated last year. These data from the STS achieve our statistical criteria for supplemental surveys. We also note that the 90-percent confidence interval requirement seems very reasonable in that, in general, a 95-percent confidence interval is a more typical statistical standard value.

Comment: One group requested that we provide the specialty groups ''with a comprehensive definition of 'complete' and 'incomplete' data in addition to an explanation of the extent to which incomplete data will be excluded or utilized in practice expense calculations.'' At a minimum, the group requested indicators for required and non-required data fields on the survey instrument.

Response: The required data fields for the survey instrument are available from our contractor, The Lewin Group, and from the protocols and guidelines we have created for the supplemental surveys. The original SMS survey data obtained from the AMA was accepted only for surveys with complete practice expense and patient care per-hour information. We will continue to use these criteria for the acceptance of data. (A copy of the guidelines and procedures may be obtained by contracting Lane Koeing at The Lewin Group at (703) 269–5659.)

Data Adjustment

Comment: Three groups commented on our use of the 1995 through 1997 specialty practice expense per-hour data from the SMS and our deflation of supplemental survey data to 1995 practice costs. The groups stated that we should use the most current data available for all specialties rather than earlier data of questionable relevance.

Response: We indicated in the July 2000 proposed rule (65 FR 44181) that, based on a recommendation by The Lewin Group, we have incorporated the 1998 SMS data into our practice expense per-hour calculations and that we are now basing our practice expense per-hour calculations on a 4-year average. Regarding the deflation of the practice costs to 1995, as long as the same deflator is used across specialties, the particular year to which the specialties are deflated is insignificant. The base year of 1995 was chosen to be consistent with the data we have already.

Comment: One group commented on our decision to weight average the supplemental data with the existing SMS data already being used. According to the group, this decision is flawed because it erroneously assumes that the SMS data currently in use is correct. In addition, they believe that the SMS sample size for emergency physicians has been too small to provide valid data for the calculation of practice expenses. The group suggested that it is inappropriate for us to weight average data from this unrepresentative sample with supplemental survey data for emergency physicians.

Response: The SMS data is the best data currently available for the calculation of practice expenses. As refinements of the practice expense methodology are identified and included, we will extrapolate and apply them to past SMS data to the extent possible. Weight averaging the supplemental survey data with the existing SMS data would be used to increase the sample size. We also established the criteria for supplemental surveys in the May 3, 2000 interim final rule (65 FR 25666) as a guideline for those specialties seeking to increase their sample size.

Short Time Frame for Data Submission

Comment: Three groups expressed concern with the short time frame we have provided for specialty groups to develop the survey methodologies, find a contractor, and provide the data for computation of RVUs.

Response: Section 212 of the BBRA required that we establish, through regulation, a process for any organization to collect and submit supplemental survey data for use in establishing payments for the calendar years 2001 and 2002 physician fee schedules. Thus, the amount of work required to be accomplished in a short time was largely due to the requirements of the statute itself.

Cost Burden of the Supplemental Surveys

Comment: Two groups commented that we should share the cost burden for the supplemental surveys. According to the groups, the supplemental surveys will be filling in the data gap left by the SMS and, therefore, we should subsidize the cost of completing the surveys. In addition, one group commented that the efforts needed to meet the supplemental survey requirements may be prohibitively costly for many specialties without subsidization from us. One group also commented that we should take into account the AMA's problems with the expense of administering the SMS before fully adopting the survey protocol. Specifically, they suggested that we look for less costly, and more cost-effective, ways of validating the data than telephone interviews.

Response: We have no funding for supplemental surveys, and we are not currently considering such approaches. As we have previously explained, we believe the SMS data are currently the best available source of practice cost information. We believe there are significant, methodological advantages to obtaining practice cost information through multi-specialty surveys such as SMS, rather than through surveys of more limited groups of specialties. The supplemental survey process allows specialties the option to provide additional information.

Comment: Two groups suggested that we should eliminate some of the criteria for the acceptance of outside survey data if a specialty can demonstrate that the collected data are valid practice expense data for the specialty. According to one commenter, some specialty groups may have valid data that does not exactly meet the criteria we outlined, but nevertheless could be a valuable data source.

Response: In the May 3, 2000 interim final rule (65 FR 25666), we presented the criteria for specialty societies seeking to collect new practice expense data through supplemental surveys. The process established by these criteria, as amended by this final rule, should be followed by specialty societies to collect future supplemental practice expense data.

Survey Contractor Requirements

Comment: One group expressed concern about contracting for survey research. According to the group, many specialties have staff capable of analyzing the survey data. Requiring specialties to contract for the surveys could eliminate certain subspecialties from administering a supplemental survey due to cost burden.

Response: We recognize the cost burden of contracting for the supplemental survey administration; however, to ensure the integrity of the practice expense data, we are requiring

that a disinterested third party administer supplemental surveys.

Comment: One group questioned our requirement for specialties to use a survey contractor with experience in conducting national multi-specialty surveys of physicians using random samples. They believe that a contractor with experience surveying health care professionals and using random sample techniques should be sufficient.

Response: We believe our initial requirements represent a preferred way to collect valid and reliable data. We will, however, consider survey contractors with experience surveying health care professionals, collecting financial information, and using random samples.

Comment: Two groups are concerned with our requirement for raw survey data to be submitted to us. One group believes that we should outsource the analysis of the survey responses. The other group opposes the submission of raw data to us because they believe physicians will be unlikely to respond to sensitive financial questions if they are informed that their individual responses will be sent directly to the government.

Response: The raw survey data have been submitted to The Lewin Group, and they have provided us with only aggregate practice expense values.

HCFA's Use of the Supplemental Survey Data

Comment: One group expressed concern about our use of the supplemental survey data. Before administering an expensive survey, they want assurance from us that the supplemental data will be used. Alternatively, the group believes we should conduct a survey across all specialties. They commented that we must adopt one of these options to remove flawed data that does not account for the unique practice expenses related to emergency medicine.

Response: The criteria for the consideration of supplemental survey data are described in this final rule. We anticipate incorporating data that meet these criteria in the practice expense methodology.

Comment: One group requested that we provide specialty groups with the criteria for determining if data supplied between August 2, 2000 and August 1, 2001 is usable. We state in the interim final rule that submitted data will be considered, but we do not state whether the criteria for acceptance will be the same as the criteria for data supplied by August 1, 2000.

Response: The criteria for accepting supplemental survey data were presented in the May 3, 2000 interim final rule. These criteria were subject to public comment, and any modification we have made to these criteria, as a result of the comments, are part of this final rule.

Result of Evaluation of Comments

The criteria published May 3, 2000 will be used for surveys submitted in 2001 with the following modifications.

- We had proposed that specialty groups use a contractor that has experience with the SMS or a survey firm with experience successfully conducting national multi-specialty surveys of physicians using nationally representative random samples. We have modified the criteria to provide for using a contractor that has experience surveying health care professionals, collecting financial information and using random samples.
- In addition, based on our review of the supplemental surveys submitted, we are modifying our criteria concerning an acceptable level of precision for surveys. We now believe a reasonable level of precision for surveys to be used for supplementing current data is a 90 percent confidence interval with a range of plus or minus 10 percent of the mean; (that is, 1.645 times the standard error of the mean, divided by the mean, should be equal to or less than 10 percent of the mean).

With respect to response rates, we are concerned about the low response rates received from supplemental surveys submitted to us in 2000. While we acknowledge that the timing of the surveys (that is, short-field time and time of year) contributed to the low response rates, we believe that groups will have more time to conduct surveys and, thus, are likely to obtain better response rates in future surveys. While we continue to believe that it is impossible and impractical to set rigid cutoffs, we are expecting higher response rates than were achieved in the supplemental surveys submitted to us in 2000. We would like to see detailed analyses that indicate the sample is representative of the population. While The Lewin Group was able to perform some limited analyses of response bias for the supplemental surveys received in 2000, we expect that these supplemental surveys received in 2001 will provide detailed analyses with respect to possible response bias on factors that could affect practice expenses. Such analyses should consider variables such as specialty society membership, years in practice, board certification, gender, geographic distribution of respondents, and practice arrangements (for example, solo practitioners or large group practices). We will not consider supplemental data in the practice expense methodology unless we receive detailed analyses that give us confidence that survey respondents are representative of the profession on items that affect practice expense. In addition, the data must appear reasonable and consistent with other data used to determine practice expense RVUs.

Submission of Supplemental Surveys

In response to the May 3, 2000 interim final rule, three organizations submitted supplemental survey data for consideration. One survey was submitted by the American Physical Therapy Association (APTA), and a joint survey was submitted by the American Association of Vascular Surgery (AAVS) and the Society for Vascular Surgery (SVS). Our contractor, The Lewin Group, has evaluated the data submitted by each organization and recommended that we use these data. The full recommendation and discussion will be made available on the HCFA website. We have decided to use the data submitted by the AAVS and SVS to supplement the information we are currently using. However, we have decided not to use the data submitted by the APTA. The revised practice expense per hour figures that we are using for vascular surgery are:

Clinical staff	Admin staff	Office expense	Supplies	Equipment	Other	Total
20.2	18.1	17.7	3.2	4.5	11.4	75.1

These figures are from the supplemental survey information provided to us from the Lewin Group adjusted by the MEI so the figures reflect 1995 data. That is, we divided the 1999 practice expense per hour data by the cumulative MEI for 1996–1999 (1.0877).

Both supplemental surveys have extremely low response rates (about 14 percent for vascular surgeons and 11 percent for physical therapists). We specified the criteria we would apply for supplemental surveys in the May 2000 interim final rule (65 FR 25666). While we did not establish a precise minimum response rate, we did indicate that surveys with response rates less than 80 percent to 90 percent require an analysis to determine to what extent the sample is representative of the population. The extremely low response rates achieved by these two supplemental surveys and the relatively small number of responses make it extremely difficult, and very subjective, to determine whether the data are representative of each specialty. Our contractor was able to make very limited assessments of this issue based on the data provided.

However, in our May 2000 interim final rule, we indicated that, based on our review of existing physician practice expense surveys, we believe that an achievable level of precision is a coefficient of variation, that is, the ratio of the standard error of the mean to the mean expressed as a percent, not greater than 10 percent, for overall practice expenses or practice expenses per hour. For existing surveys, the standard deviation is frequently the same magnitude as the mean. We indicated in the May 2000 interim final rule that we would consider practice expenses for which the precision of the practice expenses is equal to or better than this level of precision and that meet the other survey criteria.

The data submitted by the AAVS and the SVS met the level of precision. The data submitted by the APTA did not rise to this level of precision; they did not meet this objective criterion set out in the May 2000 interim final rule. Thus, we do not have, in the survey data submitted by the APTA, data that convince us of both the representativeness or the precision of the surveys. For that reason, we are unable to incorporate the supplemental survey data submitted by the APTA in the practice expense system.

We note, however, that we have made an adjustment to the practice expense data for physical and occupational therapy services based on other comments received. These comments and adjustments are described elsewhere in this regulation.

In addition, one specialty society also submitted data concerning clinical staff in the hospital setting. The data submitted were not in the context of supplemental survey data. We discuss the issues addressed by these data elsewhere in this preamble.

(ii) Proposals for SMS Refinement

In the July 2000 proposed rule (65 FR 44180), we discussed the tasks that our contractor, The Lewin Group, was undertaking to assist us with broad practice expense technical and methodological issues. We also highlighted the recommendations that were contained in the first draft report that the contractor submitted, ''Practice Expense Methodology,'' dated September 24, 1999. This report is on our homepage under the title ''Practice Expense Methodology Report.'' (Access to our homepage is discussed under the ''Supplementary Information'' section above.)

The report contained various recommendations aimed at increasing the validity and reliability of the AMA's SMS survey. Although the Lewin Group's recommendations were made specifically to address improving the SMS survey for calculating practice expense RVUs, we believe the recommendations will be useful in making refinements to any other survey instrument that may be used in calculating practice expense RVUs. The recommendations fell into the three following areas:

- The use of data supplementary to the SMS survey.
- Suggested changes to the survey instrument.
- Recommendations for using the data in calculating the specialty-specific practice expense per hour.

In response to the report's recommendations on the use of the SMS data, we proposed to incorporate data from the 1998 SMS survey, which is the latest data available, into our practice expense per-hour calculations. In addition, we proposed basing the practice expense per hour calculations on a 4-year average, rather than the 3-year average recommended in the contractor's report. We published a table that contained the practice expense per-hour calculations for CY 2001 that resulted from the above proposals. We also proposed standardizing the practice expense data to reflect a 1995 cost year consistent with the pricing information we are using for the estimates of practice expense inputs for individual procedures. To standardize costs, we proposed inflating 1995 cost data by the MEI and deflating 1996 and 1997 costs data. This proposal has virtually no impact on the practice expense per-hour calculations.

After discussions with the AMA's SMS staff, we did not propose, as recommended by our contractor, to revise edits and trims to the SMS survey data to exclude data that fall outside set acceptable ranges.

In the July 2000 proposed rule (65 FR 44184), we also discussed the suggestions we made to the AMA for including additional questions in the SMS survey that would make it more useful for calculating specialty-specific practice expenses more precisely. It now appears that the AMA may no longer undertake a multi-specialty survey to collect practice expense information. While we will continue our discussion with the AMA regarding any future plans for practice expense data collection, as stated above, we believe these recommendations will be useful in the design of any other survey used in developing practice expense RVUs.

As we indicated earlier, we proposed to use data from the 1998 SMS to develop the 2001 practice expense RVUs. Furthermore, data from the 1999 SMS will become available later this year for use in developing the 2002 practice expense RVUs. In addition, section 1848(c)(2)(B) of the Act requires that not less often than every 5 years, we review and make adjustments to RVUs. Thus, we are required by the statute to review and make adjustments to the practice expense RVUs 5 years after the end of the transition period, that is, no later than 2007. Regardless of whether the AMA continues to collect data on practice expenses, we will be developing plans for making refinements to practice expense RVUs beyond 2002.

Comment: One specialty society indicated that SMS data from 1998 and 1999 is available and we have not used this data in the past because of fears that the data may be tainted now that some physicians know that the responses could affect Medicare fees. The commenter recommended that we use data from 1996 through 1999, rather than the 1995 through 1998 data we have proposed using.

Response: In the November 2, 1998 final rule (63 FR 58821), we expressed concern about the potential biases that may exist in surveys collected by individual specialties and in any survey data collected in the SMS survey process subsequent to our June 5, 1998 proposed rule. There is no relationship between this concern and any decisions that we have made with respect to incorporating available data from the SMS survey process into the practice expense methodology. Since SMS survey data from 1998 was collected more than 1 year before the June 1998 proposed rule announcing the ''top down'' methodology, any implication that we did not previously propose use

of the data because of a concern about bias in the data is inaccurate. Rather, we have not previously proposed using the data because it was unavailable to us before this year's proposed rule. In addition, we did not propose using SMS data from 1999 because it was unavailable to us at the time of the proposed rule. We will consider using 1999 data from the SMS for setting 2002 physician fee schedule rates. As we stated in our July 2000 proposed rule (65 FR 44184), we welcome comments on long term strategies for collecting practice expense data in the future.

Comment: We received two comments that indicated that the SMS sample for gastroenterology is small and inadequate, that the response rate in the SMS is the lowest among any specialty, and that the practice expense calculations are probably inaccurate. One of these commenters also urged us to work with the AMA and the medical community to improve the aggregate specialty-specific data. A specialty society representing pediatrics reiterated the concern that the pediatric specialties are not adequately represented in the SMS, and a society representing geriatrics also believed that the sample size of geriatricians is not large enough to yield reliable data. Another commenter was concerned about the inadequate sample size of radiation oncologists in the SMS and believed that the use of the Physician Masterfile under-samples non-hospital based radiation oncologists and over-samples hospital-based radiation oncologists, who do not incur the same practice expenses for equipment and staff. Several imaging specialties stated that the SMS does not capture the practice expenses for TC services, probably because the SMS sample is skewed toward professional-component only providers. These commenters argued that, even if the sample of TC providers were adequate, the higher TC costs would be diluted by the lower PC costs, and thus it is necessary to perform a survey of only TC providers to use in the practice expense calculations.

Response: Since concerns regarding the representation of various specialty societies in the SMS data were raised previously, we are reiterating our general response that can be found in more detail in the November 2, 1998 final rule (63 FR 58821). As we indicated in that rule, many of the criticisms of the SMS data could well be made about any other practice expense survey. At the time, we proposed use of the SMS data for developing the practice expense RVUs, we indicated that it was the best available data source on aggregate practice expenses. Since we are continuing to rely on the SMS data in the process for determining practice expense RVUs, we believe that the specialty-specific representation in the data is now improved by incorporating an additional year of data. The practice expense per hour will be based on a larger number of survey responses that will likely result in improved representativeness of the data.

Comment: One commenter contended that the data in the practice expense per-hour table in the July 2000 proposed rule do not appear logical, objective, or consistent. There is an unexplained range of clerical payroll per hour among similar specialties, and the ranking of the practice expenses among specialties appears to be untenable; for example, the total practice expense per hour for dermatology is almost two times greater than for gastroenterology.

Response: We believe that different specialties are likely to have differences in practice expense per-hour for indirect types of costs depending upon the nature of the practice. With respect to the examples identified, dermatologists are generally in office-based practices, while gastroenterologists provide most services in hospitals. The nature of these types of practices may result in very different expenses for administrative personnel. Without disaggregating the costs and describing the different administrative activities that are performed by employees of the different types of specialties, it is difficult to explain deviations in the practice expense per hour among specialties. Nevertheless, we reviewed data on administrative practice expenses per hour across specialties for each individual SMS data year and found, with some exceptions, that there is stability among the relative practice expense per hour for this item across years. For instance, for 3 of the 4 years that there is survey data, the administrative practice expense per hour for gastroenterology is between 61 and 63 percent of dermatology (in the remaining year, it is 53 percent). We believe that the apparent stability of the relative practice expense per hour across specialties provide assurance of the data's reliability.

Comment: We received a number of comments expressing concern about our decision to incorporate 1998 SMS data into the practice expense methodology. Several commenters noted that there were a small number of usable responses for some specialties to calculate the practice expense per hour using the 1998 SMS data, citing that cardiac and thoracic surgeons and radiation oncologists had only three responses. Another commenter stated that, in the past, we have been unwilling to use SMS data if the number of survey respondents is low. Other commenters expressed concern that for some specialties, the small sample of physicians would mean that the practice expense per hour could not be calculated accurately and such unstable data would produce some substantial changes. These commenters suggested that we not incorporate additional data, including the 1998 SMS data, until a representative practice expense sample can be performed with an adequate number of respondents for all specialties.

One specialty commented that inclusion of the 1998 SMS data is premature because of questions regarding its validity, since AMA is redeveloping the SMS with the possibility of seeking specialty-society input, and there are questions regarding the validity of the 1998 SMS data. While some commenters agreed with the general principle of using the most current data, they argued that the quality of the 1998 SMS data does not merit inclusion into our practice expense per-hour calculations. One commenter stated that the SMS survey does not recognize the unique nature of emergency medicine.

Alternatively, there were many comments that supported our use of the 1998 SMS data. These commenters generally indicated that we should use the most current data because practice expenses may change over time. In addition, these commenters indicated that there is no evidence that the 1998 SMS data is tainted or otherwise objectionable. Other commenters indicated that including more survey responses from later SMS years will result in practice expense values that are more representative of physicians' costs. Some commenters indicated that practice expense data based on a 4-year sample provides greater assurance of its quality. Many of the commenters that suggested incorporating the 1998 SMS data also indicated that we should use the 1999 data from the SMS when it becomes available. Other commenters supported our proposal to base the practice expense per-hour calculation on a 4-year average of SMS data as opposed to a 3-year average, because it will help to compensate for the low number of survey responses from some specialties in the prior years' SMS surveys.

One commenter believed that we should follow our contractor's recommendation and use a rolling 3-year average, because using 4 years results in older data completed by persons less familiar with the SMS.

Other commenters supported using only the latest 3 years of data to eliminate the oldest practice expense data from the methodology.

Response: While the lower response rates in the 1998 SMS data are a concern, we continue to believe it is appropriate to incorporate these additional data into the practice expense methodology. In general, even though there are fewer responses in the 1998 SMS data, it is unclear to us why this alone indicates that we should reject incorporating the data. Generally, the inclusion of more survey data will improve the data's representativeness and lead to more stability in the practice expense methodology. Furthermore, to the extent that there are fewer responses to the 1998 SMS survey, there will be less impact on a given specialty because the practice expense per-hour calculation is weighted by the number of respondents from each respective year. With respect to the stability of the data, the AMA indicated that a statistical test of the data ''revealed only marginal evidence of a statistically significant change in PE–HR across specialties when all specialty-level changes were considered jointly. In other words, the combined set of changes in relative PE–HR were with the range of what could be expected by sampling error.'' Thus, although there may have been some large changes in practice expense per hour across years for some specialties, there appears to be overall stability across years among all physicians.

In general, use of the 1998 SMS improves the stability of the practice expense per hour and results in little specialty level impact. For the 35 specialties listed in our impact table in the July 2000 proposed rule (65 FR 44203), 21 specialties will experience an impact that is near zero. There are nine specialties that will experience an impact of approximately 1 percent as a result of inclusion of the data. For two (cardiac and thoracic surgery) of the four specialties that show a payment impact of approximately 2 percent, the data were affected by more than just the inclusion of the 1998 SMS data. In the November 1999 final rule (64 FR 59391), we indicated that supplemental data would be incorporated in the practice expense per hour and we would not include data from the 1995 SMS. We are now adding the 1995 SMS data as well as the 1998 SMS data to the calculation of practice expense per hour and increased the likelihood that there would be a larger impact on the practice expense per hour. For one specialty (physical and occupational therapy, included in the nonphysician practitioner category), we made an error in the practice expense per hour calculation in the July 2000 proposed rule. After correcting this error, there is only approximately a 1-percent increase in the nonphysician practitioner category from incorporating the additional SMS data. We believe that these results support the argument that the practice expense per hour is generally stable and that it is appropriate to include 1998 SMS data in the practice expense methodology.

With respect to the comment that it is premature to incorporate 1998 SMS data into the practice expense methodology because of AMA efforts to redesign the survey and include specialty society input, we are unsure of the AMA's efforts in this regard. Nevertheless, while we would welcome multispecialty involvement in an effort to collect practice expense data specifically for the purpose of determining relative value units, we believe that such efforts should not have any bearing on our decision to incorporate later SMS data into the practice expense methodology at this time. If new data were to be collected under a redesigned survey process, it could be at least 2 years before such data is available to us. In the interim, we believe it is appropriate to include the latest SMS data into our methodology.

We disagree with the commenter who suggested that the older SMS data should be eliminated from the practice expense per hour calculations because the surveys were completed by respondents less familiar with the SMS. The SMS is a longstanding survey that was originally developed by the AMA in 1981. There is no evidence that data from earlier SMS surveys is less reliable than later survey information.

Comment: A commenter representing urologists stated that, if we are not going to accept our contractor's recommendation to revise the edits and trims to the SMS survey data, the use of median values, rather than means, would produce the most fair relative ranking of the practice expense per hour among medical specialties.

Response: We believe it is appropriate and consistent with the statute to use the mean practice expense per hour rather than the median. Under the practice expense methodology, the practice expense per hour for each specialty is multiplied by the physician time per procedure and number of Medicare allowed services and summed at the specialty level to produce aggregate specialty cost pools. In theory, the aggregate practice expense pools would reflect actual physicians' costs if the utilization data for all payers, not just Medicare payers, were used. (In reality, however, the data is potentially biased by the inclusion of mid-level practitioners. See the June 5, 1998 proposed rule (63 FR 30832) for a more detailed discussion of this issue). If the median practice expense per hour were used, however, the aggregate cost pools would not be reflective of physicians' actual expenses, because very high-cost or low-cost practice data would be excluded. Since the statute indicates that we should ''recognize all staff, equipment, supplies and expenses,'' we believe use of the mean rather than the median practice expense per hour will result in the practice expense RVUs being more reflective of all physician practice costs.

Comment: We received several comments that were concerned about the AMA's decision to no longer collect practice expense data from the SMS. One commenter noted that the Lewin Group recommendations described in the proposed rule were aimed at improving the SMS surveys and/or practice level surveys that the AMA no longer intends to perform. Other commenters expressed concern about plans for gathering practice expense data for years after 1999, particularly if the AMA will not continue the SMS survey. Two commenters recommended that we initiate a dialogue with specialty societies to develop a workable alternative and another that we consider creating and funding a survey to collect practice expense data in the future. One organization commented that the AMA's decision to no longer collect practice expense data means that issues related to uncompensated care in the practice expense methodology will not be addressed. This commenter stated that we should continue to work with emergency physicians to ensure that what the society feels are flawed practice expense data are no longer used to determine payment amounts for emergency physicians.

Response: We share these commenters' concerns about the AMA's decision to no longer collect practice expense data. However, we continue to believe that the recommendations of the Lewin Group and our suggestions to the AMA regarding improvements that could be made to the SMS and practice level survey will be helpful in future practice expense data collection efforts. As the AMA indicated in a letter to us (see 63 FR 30829 for the AMA's more detailed comments), the SMS data were never collected for the purpose of developing relative values. The Lewin Group recommendations and our suggestions to the AMA were intended

to tailor the SMS or a practice level survey to be more suitable for this purpose. While our comments were addressed specifically to improving the ability of the SMS or a practice level survey to be used for developing practice expense RVUs, there is no reason that these suggestions would not be equally valid for any alternative practice expense survey instrument that may be developed. Thus, we continue to believe that there is merit in the work of the Lewin Group and in our suggestions on improvements to the AMA survey.

With respect to the concerns expressed about gathering practice expense data beyond 1999, we have published criteria that specialties must follow to submit supplementary practice expense survey data that can be included in the practice expense calculations. Thus, there is a process for specialties to collect representative data on practice expenses for a specialty that can be used to influence the calculation of practice expense RVUs. Furthermore, we are currently planning to use 1999 SMS data to determine the practice expense per hour for calculating practice expense RVUs for 2002. Thus, the fully implemented resource-based practice expense RVUs will be based on a weighted 5-year average of the latest SMS survey data.

Regardless of whether the AMA were to continue the SMS survey, it is unclear whether it would be necessary or even desirable to incorporate more recent practice expense per hour data into the methodology on an annual basis. While the practice expense may increase or decrease over time, the important variable for the practice expense methodology is whether there is a relative change among specialties in practice expense per hour. Again, with exceptions for some specialties, there generally appears to be stability in the relative practice expense per hour among specialties in the SMS data we are using. Indeed, there generally was little redistribution in payment resulting from use of the latest SMS data. For 21 of the 35 specialties listed in Table 1 of the July 2000 proposed rule (65 FR 44203), the percent change in practice expense from using the latest SMS data was near zero. For nine of the remaining 14 specialties, the impact on payments was only 1 percent. For only five of 35 specialties listed was the impact on payments 2 percent or greater. Thus, if there is year to year stability in the relative practice expense per hour among specialties, it will likely make little difference whether we incorporate additional practice expense data into the methodology.

However, it is possible that there will be more significant changes in relative practice expense per hour over time among specialties. The statute requires that we make refinements in the practice expense RVUs at least every 5 years. While we expect to continue making refinements to the inputs for individual codes on an annual basis, it could be several years before we might require practice expense data from a multi-specialty survey after the initial refinement period ends in 2002. While we consider how to approach this issue, we welcome the comments that suggested that we seek input from the medical community in developing a mutually satisfactory and equitable approach to obtaining the needed information on practice expenses for future refinement efforts.

Comment: A society representing vascular surgeons commented that separately billable income should be deducted from practice expenses as part of the practice expense per hour calculations, because the inclusion of this income may account for the inexplicably wide range in the practice expense calculations among specialties.

Response: We agree that it is desirable to identify separately billable services. As explained elsewhere, this is an issue for future SMS revisions.

Comment: One commenter suggested that we move the SMS clinical labor expenses to the indirect expense category, as was done with the administrative labor cost. The commenter stated that with the inclusion of high administrative costs, the indirect costs will vary considerably among specialties and expressed their concern that the determination of the scaling factor is not an equitable means to distribute these indirect costs. The commenter encouraged us, along with our contractor, to examine this issue in detail.

Response: We are reviewing issues related to indirect expenses with our contractor.

Comment: A commenter stated that separately billable income of mid-level practitioners should be deducted from practice expenses as part of the practice expense per hour calculations. The commenter suggested that the total practice expense pools should be adjusted by the Medicare income received by physicians for the work of physician assistants and other mid-level practitioners. The commenter indicated that the pools can be adjusted easily for cardiac and thoracic surgery because the data on billing for these mid-level practitioners are easily available from our data files.

Response: We believe that the numerator of the practice expense per hour calculation should exclude any costs associated with mid-level practitioners and the denominator should include their patient care hours. Unfortunately, the data from the SMS do not permit the calculations to be performed in this way. We believe that this issue should be addressed in any multispecialty survey instrument that will be used in the future to collect practice expense data and determine practice expense RVUs. We disagree with the commenter that there is a feasible way of making an adjustment to the aggregate practice expense pools themselves to address this issue. While it is unclear from the comment about how such an adjustment would be made, it is possible that the commenter believed that we can use Medicare utilization data to determine the proportion of total allowed services for cardiac thoracic surgery procedures, where the specialty data indicates that the service is performed by a mid-level practitioner assisting at surgery; perhaps the commenter assumes that we would use this proportion to reduce the size of the aggregate cost pool. We believe that it is not possible to make an equitable adjustment in this way. First, the aggregate cost pools are constructed using a total practice per hour figure, and the proportional adjustment would reflect only Medicare data. Second, it is not clear to us how such a calculation would be made. An assumption would have to be made that where a mid-level practitioner is performing a given type of service, the work is being furnished for a given type of physician specialist. For instance, if a physician assistant is assisting at surgery for a heart procedure, we would have to assume that practitioner is working for a cardiac or thoracic surgeon. Even this simplified example presents a dilemma, because it would be unclear whether to adjust the pool of the cardiac or thoracic surgeon in this instance. We believe that, even if these assumptions could be made for some services, it would be difficult to make similar assumptions, for example, for evaluation and management services when the mid-level practitioner could be working for one of many different specialists. For these reasons, we are not making an adjustment to the practice expense pools at this time.

(iii) Direct Patient Care Hours

In our July 2000 proposed rule (65 FR 44184), we discussed the many concerns that have been raised from various specialty societies concerning our calculation of direct patient care hours. Several previous commenters

representing surgical specialty societies have raised concern that the hours computed for their specialties have been overstated, because non-billable hours, such as stand-by time, have been included. In addition, commenters representing emergency room physicians raised the issue that the hours spent on uncompensated care were probably also included in the survey responses to the detriment of this specialty.

We then discussed the steps we were taking to improve the future accuracy of these data. We recommended more precise wording for future survey questions so that only the appropriate practitioner hours are included.

We also discussed the second draft report issued by our contractor, entitled ''Validating Patient Care Hours Used in HCFA's Practice Expense Methodology.'' This report, which is on our homepage under the title ''Validating Patient Care Hours,'' explores alternative methods that we might use to validate the time data collected by the SMS survey. We have extended The Lewin Group's contract so that, among other refinement tasks, the above validations can be performed. We also solicited comments and suggestions as to other steps we could take to verify and improve the accuracy of the specialty-specific patient care hours.

Comment: We received several comments, primarily from surgical specialty societies, reiterating the concerns about patient care hours discussed in the July 2000 proposed rule. In particular, commenters urged that we find a way to identify non-billable hours, such as down-time between surgeries, stand-by time, phone calls, ''curbstone'' consultations, and uncompensated care, so that these non-billable hours can be subtracted from the specialties' direct patient care hours. In addition, several commenters raised the concern that the SMS survey data on patient care hours varies considerably by specialty.

The comments also contained a number of recommendations. One commenter suggested that we could use a blend of the all-physician and the specialty-specific hours. A specialty society, citing concerns about the variability between the SMS and the Harvard/RUC time data, recommended that we collect information on the Medicare share of practice hours in the SMS to produce a check of the meaningfulness of the pool allocations. Another specialty society, claiming that the SMS data on patient care hours are sure to be imprecise, urged us to use a standardized number of hours in the practice expense calculation or to statistically limit the impact of this variable. While one commenter recommended that we use the average number of hours per week that physicians' offices are open to calculate the practice expense per hour, another commenter argued that the assumption of a 40-hour work week for all specialties would result in a significant distortion of practice expenses per hour.

Response: We do agree that the patient care hours data would be more precise if we could ensure that there is a standard definition understood across specialties, so that non-billable hours would not be included in the data. As discussed in the July 2000 proposed rule (65 FR 44185), we suggested adding a clarifying definition of hours to be included to any future multi-specialty practice expense surveys. In addition, we referred to the work our contractor is doing to validate the patient care hours; one of the tasks will be a comparison between the SMS hours data and the Harvard/RUC physician time data. Once this analysis is completed, it could form a basis for deciding whether any adjustment to the SMS data is either advisable or workable. As for the recommendations that we use either a standard time for all specialties or the actual time the physicians' offices are open, we believe these recommendations stem from the mistaken impression that a specialty that actually works longer billable hours is somehow disadvantaged by our methodology. First, we believe that some specialties do put in more billable hours per week than other specialties, and using a standard number of hours for all specialties would thus be inaccurate and inequitable. Second, while it can be argued, as some commenters claimed, that most practice expense costs are generally incurred during the hours the physician's office is open, we do not have a two-tiered system of payment in which we pay less for surgeries performed at 6:00 a.m. than we do for those performed during office hours on the grounds that the earlier procedure somehow incurs less practice expense. Rather, we average the payments across each service, regardless of the time it is performed. Likewise, the practice expense per hour calculation is an average of the costs per hour, in which some hours would have higher costs and some lower. In addition, the direct patient care that takes place outside of office hours should be reflected in increases in the utilization data for that specialty that, in turn, increases the practice expense cost pools for the same specialty.

Comment: One commenter urged that any uncompensated care adjustment be allowed only for emergency department services that are furnished by practices in areas that have a disproportionate share of uncompensated care.

Response: If we were to propose any further adjustments for uncompensated care, we would publish them in a proposed rule, subject to comment by all interested parties.

Comment: A specialty society expressed concern that, because podiatrists are not surveyed by SMS, any validation of patient care hours performed by our contractor would not apply to podiatry. This commenter also stated that the specialty society has shared with us two of the society's own surveys containing patient care hour data, and requested that we either validate and use this data or take responsibility for collecting this data.

Response: We understand the points that are made by this commenter and will consider this further if we make adjustments to the patient care hours. In addition, now that a process and criteria have been spelled out for the submission of supplementary practice expense data, the specialty society can also submit additional survey data that should include information on podiatrists' patient care hours.

(c) CPEP Data

(i) Relative Value Update Committee's Practice Expense Advisory Committee (PEAC)

1999 RUC Recommendations on CPEP Inputs

The PEAC, a subcommittee of the RUC, held its initial meetings last year to begin to refine the clinical staff, supply and equipment inputs for physician fee schedule services. In the November 1999 final rule (64 FR 59394), we responded to the RUC recommendations for the refinement of the direct inputs for 65 codes originally reviewed by the PEAC and subsequently approved by the RUC and noted that our actions on all of the recommended inputs were subject to comment. We received the following comments on our revisions to the RUC recommendations:

Comment: One specialty society questioned the removal of lysol, tissues, and biohazard bags from the supply list for all codes, since these items represent costs that physicians must pay. Additionally, one organization objected to our removal of self-administered drugs from all codes, and another society, as well as the RUC, objected to the removal of betadine from the supplies recommended for the post-procedure period.

Response: We believe that the removal of such items as tissues, lysol,

and biohazard bags will help simplify the refinement of the CPEP supply data without having a noticeable impact on the payment for any service. We removed the costs of these minor supplies from the overall CPEP supply list either because of the difficulty in measuring their use or because the supplies were not fully used up during a single procedure. Throughout the supply data, the quantities for biohazard bags and tissues were reported incorrectly; for example, codes were assigned 5 boxes of tissues or 250 tissues when the intention was to assign 5 single tissues at a cost of 5 cents. The PEAC/RUC has since extended this simplification by eliminating paper towels and room disinfectant from their recent recommendations. We proposed to eliminate the very few self-administered drugs on our supply list from the CPEP data because we believe that it is reasonable to exclude non-covered items in the allocation of the specialty-specific cost pools. With respect to betadine, we note that it is included in the recommendations for the post-surgical supply package that we have accepted in this rule, which can be used by any surgical specialty for its codes. Therefore, we will not be adding back any of these individual supplies at this time.

CPT Code 17003, Destruction by Any Method, Second Through 14 Lesions

CPT Code 17004, Destruction by Any Method, 15 or More Lesions

Comment: One organization commented that we should have corrected the obvious and egregious anomaly in these codes whereby the payment for destruction of 14 lesions is considerably higher than the payment for 15 lesions.

Response: We agree that the values for these two codes appear anomalous. However, we do not assign practice expense RVUs to services. Rather, these RVUs are allocated based on the inputs that are associated with each service. Both of the above codes, along with CPT Code 17001, Destruction by any method, first lesion, were presented by the dermatology specialty societies to the PEAC, but we received recommendations only on the supplies for these services. We accepted these recommendations in general, but deleted many specific supplies from CPT Code 17003 because it is an add-on code. We have re-examined the current CPEP inputs for CPT Code 17001, 17003, and 17004, and believe that the inputs for labor and equipment appear to be appropriate. The source of the anomaly seems to be in the supply inputs for these services. To ensure that the appropriate revisions are made to the supply lists, we need specific recommendations from the RUC or the relevant specialty societies.

CPT Code 17304 Through 17310, Chemo Surgery (Mohs' Micrographic Technique) [First and Subsequent Stages]

Comment: A commenter representing Mohs surgeons, while acknowledging the revisions made in the final rule to the lists of supplies, indicated that we erroneously omitted some supplies from the updated list. The commenter provided information on the supplies omitted, as well as the rationale for why these supplies need to be included.

Response: We appreciate the detailed explanation regarding the use of these supplies. After review, we note that, with few exceptions, all the supplies the commenter claimed were omitted are in fact already included in our CPEP database as originally recommended. We explained in the November 1999 final rule that we were deleting Valium, which is separately billable, and Tylenol, which is self-administrable from all codes; therefore, these drugs will not be included for any of these services. In addition, we are not convinced that it is typical to suture the wound after each stage of surgery, and the commenter stated that the wound is not closed until it is determined that no further procedures are necessary. Therefore, we believe that only one set of sutures and suture kit are typically needed, which we are including in the supplies only for CPT code 17304. We also note that the tincture benzoin swab requested by the commenter was not included in the original RUC recommendation, though we are adding it at this time.

CPT Code 56340, Laparoscopy, Surgical; Cholecystectomy (Any Method)

Comment: A specialty society representing surgeons and the RUC objected to the decreases we made to the PEAC/RUC recommendations for the pre- and post-service times for this CPT code. They indicated that there were extensive discussions about this code at the PEAC/RUC meeting, and that adequate information was provided to support this change for pre-service time. The commenters also objected to our elimination of the time for the second registered nurse in the post-service period and requested that we provide the basis for determining that this is not typical practice.

Response: There was insufficient rationale for the PEAC recommendations transmitted to us. Moreover, the PEAC is currently working on establishing a standardized methodology for refining the pre- and post-procedure clinical staff times. This code, like all other surgical codes involving pre- and post-procedure staff time will undergo further refinement. We are not changing the clinical staff times now, but will review them upon receipt of the PEAC recommendations for pre- and post-procedure time for surgical procedures in general.

CPT Ophthalmology Codes 65855, 66170, 66172, 66821, 66984, 67036, 67038, 67039, and 67040

Comment: Three specialty societies representing ophthalmologists and the RUC expressed concern that we did not accept the RUC recommendation to increase the pre-service period to 42 minutes for the above CPT codes, but rather deleted all pre-service clinical staff time. The commenters also noted that the statement in the November 1998 final rule that we were retaining the original CPEP value of zero minutes was in error for CPT codes 66170, 66172, 66984, 67036, 67038, 67039, and 67040 because the CPEP panel had assigned 24 minutes of clinical staff pre-service times to these codes. Commenters requested that we accept RUC recommendations for 42 minutes of clinical staff time in the pre-service period for all these codes because facility-based surgical procedures require significant pre-service clinical staff work.

Response: We thank the commenters for pointing out our inadvertent error regarding the pre-service time in the original CPEP data for seven of the above ophthalmology codes. Although we are not convinced that each of the codes would have as much as 42 minutes of pre-service clinical staff time, we will use this as an interim value for pre-service time. We understand that the PEAC and RUC are planning to develop standardized approaches to assign the pre- and post-surgical clinical staff times, as well as coordination of care times, across wide ranges of codes for the different global periods. These pre-service times can then be revisited in light of future recommendations.

Comment: Several ophthalmic societies opposed our decision to decrease the post-service clinical staff time approved by the PEAC/RUC for ophthalmic surgical procedures. The commenter representing three ophthalmic sub-specialties also stated that we did not consider the consensus agreement to replace the Ophthalmic Medical Personnel (OMP) staff type with the Certified Ophthalmic

Technician (COMT) staff type for ophthalmic procedures. Another specialty society believed we should have collapsed the two staff types into the OMP staff type, because this was agreed upon at the 1997 validation panels.

Response: At the time that the November 1999 final rule was developed, we had received a comment from the specialty society that had presented these codes to the PEAC. This comment described the building-block approach that was used to arrive at the post-service clinical times. Unfortunately, there was a miscommunication regarding the specific building blocks that were used to arrive at the total times, and our total times were different from those of the RUC. We have since received a clarification from the specialty society, and we are restoring the clinical post-service times to their recommended values.

There appears not be a consensus among the ophthalmic specialty societies regarding which staff type to use for ophthalmology codes. In addition, we have not used any of the decisions from the 1997 validation panels in refining the practice expense inputs, but have accepted the RUC recommendations for the use of the OMP staff types for the codes that have been refined to date. We have not received from the RUC any recommendation regarding a global change in the staff type for ophthalmology services, but would certainly consider any future recommendation from the RUC on this issue.

CPT Code 85060 Blood Smear, Peripheral, Interpretation by Physician With Written Report and CPT Code 85097 Bone Marrow; Smear Interpretation Only, With or Without Differential Cell Count

In the November 1999 rule (64 FR 59397), we stated that these were professional services and, if any practice expenses were incurred, they could be reported using other applicable codes. Therefore, we removed all practice expense inputs for these two codes.

Comment: Two specialty societies and the RUC requested that we use the recommendations of the RUC to establish a TC for CPT Code 85060, even though we would not use the RVUs for payment purposes, because other payers are increasingly using our RVUs to establish fees. The commenters also stated that the interpretation of blood smears can require additional slides and services. Commenters did not agree that the activity associated with the technical portion of CPT Code 85097 is included in payment for other services when this service is performed outside a hospital, as is increasingly occurring. They indicated that creation of a TC component for CPT Code 85097, using the RUC recommendations, would allow the laboratory that receives the specimen to bill for the technical costs in preparing the slide for examination by the physician, and recommended this TC component be paid under the physician fee schedule.

Response: We do not want, at this time, to create a TC for a code that we do not cover, such as CPT Code 85060. However, as mentioned elsewhere in this final rule, we are further considering the issue of valuing non-covered services. We will publish practice expense RVUs for CPT Code 85097, so that it can be paid when furnished in a nonfacility setting. We will use the RUC recommended inputs to calculate the practice expense RVUs.

CPT 88104 Cytopathology, Fluids, Washings or Brushings, Except Cervical or Vaginal; Smears With Interpretation

Comment: Several commenters pointed out that, while we accepted the RUC recommendation that included filter paper in the list of supplies for this code, this was not reflected in the CPEP database.

Response: This item was omitted inadvertently from the CPEP database and will now be included.

In the November 1999 final rule, we deferred action on the RUC recommendations for a few groups of CPT codes on which we had significant questions. In the July 2000 proposed rule (65 FR 44185), we proposed to accept two groups of CPT codes of the RUC recommendations with the revisions noted below, while the RUC recommendation discussed below for the antigen service has not been previously addressed.

Prostate Procedures

CPT 52647 Non-Contact Laser Coagulation of Prostate, Including Control of Postoperative Bleeding, Complete (Vasectomy, Meatotomy, Cystourethroscopy, Urethral Calibration and/or Dilation, and Internal Urethrotomy Are Included)

CPT 53850 Transurethral Destruction of Prostate Tissue; by Microwave Thermotherapy

CPT 53852 Transurethral Destruction of Prostate Tissue; by Radiofrequency Thermotherapy

We discussed the inputs for these codes at length with the relevant specialty society, and arrived at a consensus on the staff, supplies, and equipment that were needed for these services.

Comment: The American Urological Association (AUA) applauded us for our proposal to accept the RUC recommendations for the three heat therapy prostate procedures and agreed that all inputs are now included in the CPEP data for these services. One manufacturer recommended that we adopt our proposal for CPT code 53850 in this final rule. Three individual urologists and a manufacturer commented that we should add equipment, such as an autoclave, rigid cystoscope, video system or ultrasound equipment to the equipment inputs for CPT Code 53852. The manufacturer also stated the prices in the CPEP database for the generator system and the hand piece are now outdated, and included the suggested current prices. Two of these commenters also included a list of supplies, most of which are already in the CPEP inputs for this code.

Response: Because our proposal is based on a recommendation from the RUC, and the AUA has stated that it believes the current inputs for this code are correct, we will not add the suggested equipment or supplies at this time, nor change the prices for any of the equipment. However, we have awarded a contract to have all of our direct cost inputs re-priced and any information that is sent to us on current pricing will be forwarded to our contractor.

Chemotherapy Procedures

CPT 96408 Chemotherapy Administration, Intravenous; Push Technique

CPT 96410 Chemotherapy Administration, Intravenous; Infusion Technique, Up to One Hour

The RUC had recommended 102 minutes of clinical staff time for CPT code 96408 and 121 minutes for CPT code 96410. After the publication of the November 1999 final rule we met with representatives of the American Society of Clinical Oncology (ASCO) and discussed the society's breakdown by specific tasks of the above staff times. Included in this breakdown were 20 minutes for pre- and post-procedure education and 15 minutes for three phone calls after each visit.

Because we believed that the times for patient education and phone calls should be averaged over the whole course of chemotherapy treatment, and because there appeared to be some duplication in the pre- and post-procedure education tasks, we reduced both the patient education and phone

call times by 5 minutes. Therefore, we proposed 92 minutes of clinical staff time for CPT code 96408 and 111 minutes for CPT code 96410.

Comment: ASCO objected to the 10-minute reduction of the clinical staff time for CPT 96408 and 96410. The commenter argued that the original RUC recommendation was reasonable and appropriate for both services and should be adopted. The comment also objected to our revision of a RUC recommendation unless we have a concrete reason to do so.

Response: Upon reviewing the times the RUC has since recommended for patient education and post-visit phone calls for comparable services, we are adding the 5 minutes we had removed from both patient education and phone calls in the proposed rule. We will now use the RUC-recommended total times of 102 minutes of clinical staff time for CPT code 96408 and 121 minutes for CPT code 96410. We believe that the total time is consistent with subsequent recommendations that we are accepting, though as the PEAC and RUC continue to develop standardized times for clinical staff functions, all previously valued codes are subject to possible review.

CPT 95165 Allergen Immunotherapy

The RUC did not forward any recommendations on the specific inputs required to perform the above service. However, we did receive a recommendation about the interpretation of the meaning of a dose for purposes of calculating the practice expense RVUs for this service. Because we did not believe the recommendation resolved the ambiguity and confusion in the medical community surrounding this issue, we did not accept this recommendation in the July proposed rule. Since that time, we have received clarifying comments from relevant specialties on both the definition of dose and the practice expense inputs to use for this code.

The practice expense inputs have been analyzed and adjusted so that they now correspond to the practice expense of preparing a one cc dose from a ten cc (ten dose) vial. The practice expense inputs for CPT code 95165 are based on an assumption that ten doses are typically included in each vial. Payment will be based on a maximum of ten doses per multidose vial. The practice expense RVUs for preparing a ten dose vial will remain the same, even if twenty doses are obtained from the vial (for example, if the physician administers 0.5cc doses, instead of one cc doses). Therefore, Medicare should be billed for a maximum of ten doses per vial, even if more than ten doses are obtained from the vial. Furthermore, when a physician dilutes a multidose vial (for example, by taking a one cc aliquot from a multidose vial and mixing it with nine cc's of diluent in a new multidose vial), Medicare should not be billed an additional amount for these diluted doses for CPT 95165. The additional clinical staff and supply costs for preparing such a diluted vial are minimal, because allergens represent over 80% of the direct costs of preparing a multidose vial. In a diluted vial there are no associated allergen costs, since they have already been billed in preparation of the initial vial. Therefore, we expect a maximum of ten doses to be billed for each multidose vial. If fewer doses are prepared from this vial, a dose number less than ten per vial should be billed.

The practice expense inputs per one cc dose are as follows:

Clinical Staff: 2.2 minutes
Supplies: Allergen $6.05
0.5 needles and syringes
0.1 vial and cap
one alcohol pad
1 pair of nonsterile gloves

If multiplied by ten, the inputs correspond to the total practice expense of a ten cc vial from which ten doses of one cc each are administered. Commenters recommended that a typical ten cc multidose vial contains five antigens and no diluent and that the total number of needles and syringes for the ten cc vial is five. The cost data for allergens was obtained from catalogue information and is based on the typical practice of using standardized extracts when available.

In view of the clarification we have made regarding practice expense inputs, we will revise Section 15050(B)(7) of the Medicare Carriers Manual. In May 1998, we changed the language of that section, in part, to clarify our payment policy for antigen preparation. At that time we stated, ''A dose of code 95165 is the total amount of antigen to be administered to a patient during one treatment session, whether mixed or in separate visits.'' Two examples of antigen preparation and administration follow immediately after this language.

We will revise this section of the carrier manual to define a dose as a one cc aliqout from a single multidose vial. With this clarification physicians will be able to bill Medicare for each dose prepared in each multidose vial. We plan to issue new instructions to the carriers and update the carrier manual to ensure that appropriate payment is made as of January 1, 2001.

2000 RUC Recommendations on CPEP Inputs

We believe that the recommendations received this year from the PEAC/RUC for the refinement of the CPEP inputs for existing codes mark a positive step in the CPEP refinement process. We received recommendations for clinical staff, supply and equipment inputs for 49 CPT codes, and for the supply and equipment inputs for four additional services. But the significance of the recommendations goes beyond the number of codes that were refined. First, included in these recommendations were the refinements for the 15 major evaluation and management (E/M) codes. These 15 codes represent over 25% of the payments made under the physician fee schedule. This was a breakthrough not only because the clinical staff times for these codes had previously been a point of major contention, but also because agreement on the inputs for E/M services may make it easier in the future to refine the post-surgical visits for thousands of services. Second, the PEAC/RUC approved supply packages for three specialties: obstetrics-gynecology, ophthalmology and neurosurgery; as a result, the supply inputs for hundreds of codes are now refined. We also understand that the PEAC will be developing further supply packages and is also setting up workgroups to determine approaches to standardizing pre- and post-procedure clinical staff times.

We have reviewed the submitted RUC recommendations and have accepted all of them with only two minor revisions. In order to be consistent with a revision made previously in the November 1999 final rule, we have deleted the skin marking pen when it appears in a recommended supply list because it is not practical to allocate its use to individual procedures. In addition, for the ophthalmology codes that were refined before the supply packages were adopted, we have substituted the ophthalmology visit supply package as appropriate. If future decisions are made on standard clinical staff times, all of these refined codes can be revisited to determine whether any further refinements would be appropriate.

Following is a list of the CPT codes that were included in the PEAC/RUC recommendations: (The complete PEAC/RUC recommendations and the revised CPEP database can be found on our website. See the Supplementary Information section of this rule for directions on accessing our web site.)

CPT 57452 Examination of vagina

CPT 57454 Vagina examination and biopsy
CPT 57500 Biopsy of cervix.
CPT 59000 Amniocentesis
CPT 62270 Spinal fluid tap, diagnostic
CPT 65730 Corneal transplant
CPT 67311 Revise eye muscle
CPT 67800 Remove eyelid lesion
CPT 67961 Revision of eyelid
CPT 90471 Immunization admin*
CPT 90472 Immunization admin, each add*
CPT 90782 Injection, sc/im
CPT 92270 Electro-oculography
CPT 92275 Electroretinography
CPT 92582 Conditioning play audiometry
CPT 94621 Pulm stress test/complex
CPT 95812 Electroencephalogram (EEG)
CPT 95822 Sleep electroencephalogram
CPT 95829 Surgery electrocorticogram
CPT 95830 Insert electrodes for EEG
CPT 95861 Muscle test, two limbs
CPT 95863 Muscle test, 3 limbs
CPT 95864 Muscle test, 4 limbs
CPT 95867 Muscle test, head or neck
CPT 95868 Muscle test, head or neck
CPT 95870 Muscle test nonparaspinal
CPT 95903 Motor nerve conduction test
CPT 95925 Somatosensory testing
CPT 95926 Somatosensory testing
CPT 95930 Visual evoked potential test
CPT 99141 Sedation, iv/im or inhalant
CPT 99142 Sedation, oral/rectal/nasal
CPT 99201 Office/outpatient visit, new
CPT 99202 Office/outpatient visit, new
CPT 99203 Office/outpatient visit, new
CPT 99204 Office/outpatient visit, new
CPT 99205 Office/outpatient visit, new
CPT 99211 Office/outpatient visit, est
CPT 99212 Office/outpatient visit, est
CPT 99213 Office/outpatient visit, est
CPT 99214 Office/outpatient visit, est
CPT 99215 Office/outpatient visit, est
CPT 99241 Office consultation
CPT 99242 Office consultation
CPT 99243 Office consultation
CPT 99244 Office consultation
CPT 99245 Office consultation
CPT 95813 Electroencephalogram (EEG)
CPT 95816 Electroencephalogram (EEG)
CPT 94060 Evaluation of wheezing
CPT 95921 Autonomic nerv function test
CPT 95922 Autonomic nerv function test
CPT 95923 Autonomic nerv function test

***Note:** These are noncovered under the Medicare physician fee schedule.

Other Comments on Refinement of CPEP Inputs

Comment: One commenter asked that we clarify whether we plan to implement the RUC CPEP recommendations on a rolling basis, or whether all changes will be made at once.

Response: Unless we announce a change in approach, we plan to deal with the RUC's recommendations on a rolling basis as we receive them.

Comment: A commenter representing three ophthalmology sub-specialty societies expressed disappointment in our belief that it is preferable to have a multi-specialty agreement on changing the CPEP data, rather than accepting the recommendations of a single group. The commenter argued that there is little or no added value from such multi-specialty review when the impact of the changes is limited to a single specialty and when members of other specialties have no additional clinical knowledge.

Response: We strongly disagree with this comment. We have found that the input and recommendations of the RUC play a crucial role in the practice expense refinement. Also, because there are many codes that are shared across a number of specialties, changes in payment for even a specialty-specific service can affect the payment of the shared services that the specialty performs. Therefore, we believe that it is fair and equitable to have a multi-specialty consensus on these changes. In addition, we have found, in our role as observers at RUC meetings, that RUC members, of whatever specialty, ask pertinent questions and make clinically relevant observations.

Comment: A specialty society representing many medical specialties recommended that we should use panels, corresponding to the refinement panels we use for work, to make recommendations on code-level refinements that are submitted to us.

Response: We certainly do not rule out the use of such refinement panels for code-level practice expense recommendations when and if such panels would be necessary and useful. We have used these panels for work RVU refinement in those cases when we have not accepted the RUC recommendations on a number of codes and subsequently have received comments disagreeing with our actions. Because we have made so few revisions in this current final rule to the PEAC/RUC recommendations for practice expense inputs, there may be no need for practice expense panels next year, although we will consider this issue.

(ii) Clinical Staff Time

In the November 1999 final rule (64 FR 59399), we removed estimates of all clinical staff time allotted to the use of clinical staff in the facility setting from the CPEP data. Commenters have since noted that the clinical staff times reported by some CPEP panels for pre- and post-service times for 0-day global services performed in the office were recorded in the intra-service field in the CPEP database. These times were, therefore, deleted along with the times for the use of clinical staff in the facility setting.

In the July 2000 proposed rule (65 FR 44186), we stated that these data are not comparable to the data we excluded for clinical staff used in the facility setting. We reviewed the ''CPEP Recorders' Notes Files'' compiled for each CPEP panel by Abt Associates, Inc., the contractor managing the CPEP panels. When the notes indicated that clinical staff estimates were for activities performed in physicians' offices, we proposed to reinstate the time data for 0-day global services.

Comment: Many medical societies representing specialists such as gastroenterologists, internists, rheumatologists, cardiologists, osteopaths and podiatrists, as well as the AMA, expressed strong support for this proposal to reinstate the pre- and post-procedure clinical staff time in the office for 0-day global services. One reason given in the comments for this support is that this time for staff in the office is not comparable to the data excluded for clinical staff used in the facility setting.

Response: We are pleased that all commenters supported this proposal, and we are implementing this refinement in this rule.

Comment: An organization representing cardiologists stated, in a comment on the November 1999 final rule, that we should enlist the assistance of medical specialties to identify codes for which clinical staff are used in the physician's office during the intra-service period for facility services. In a comment on the current proposed rule, this society agreed with our proposal to add some pre- and post-service clinical staff time to 0-day global services and listed several 0-day cardiology services for which it recommended the addition of clinical staff time.

Response: In this proposal, we added only clinical staff time in the facility setting for those 0-day services when the CPEP recorder notes specified that the time was for pre- and post-service time for staff in the office. We believe that this is appropriate because these CPEP data are as valid as all other non-refined CPEP data. We also believe that changes to the CPEP data for this pre- and post-service clinical staff time should go through the same refinement process as other desired changes and that any

group recommending the addition of such time should present this issue to the PEAC/RUC for refinement. We also understand that the issue of ''coordination of care'' clinical staff time is one that the PEAC may address across the board at some future meeting. In addition, from the description of the staff duties for the codes listed by the commenter, it is not clear that this staff is in the office, rather than in the facility performing facility nursing functions. Therefore, we will not be making these changes at this time.

Comment: An emergency physician organization recommended that we not limit this proposal to 0-day global period services and submitted the CPEP recorders' notes for emergency room visits, CPT codes 99281 through 99285. The notes indicate that the CPEP panel added 3 minutes of pre-service time and 4 minutes of post-service time for office staff involved in admissions to the emergency room. The commenter recommended that this time be reinstated for these emergency room visit codes.

Response: These emergency room visits have an XXX global period. By the current definition, XXX services do not include pre- and post-service times. Before implementing this specific recommendation, we hope to receive input from the RUC/PEAC on the general issue of appropriate pre- and post-staff times for the different global periods, in order to ensure consistency in our approach to this issue.

In the November 1999 final rule (64 FR 59399) we finalized our decision to remove from the CPEP data all clinical staff times associated with physician's staff used in the facility setting. We implemented this policy for the following reasons—(1) We should not pay twice for the same service; (2) It is not typical practice for most specialty societies to use their own staff in the facility setting; and (3) Inclusion of these costs is arguably inconsistent with both the statute and Medicare regulations. In response to the November 1999 final rule, we received many comments on this final decision, which, for the most part, reiterated comments that had been made on the original proposal.

Comment: Although several primary care groups expressed support for this decision, most of the commenters objected to the exclusion of this clinical staff CPEP data. Many of these organizations urged us to postpone the implementation of this policy and to collect additional information before making a decision on how to treat these costs. However, taking the opposite approach, a primary care organization stated that the clinical staff time should be removed for services furnished in the facility until the PEAC/RUC can determine that the time for these services is typical and not duplicative of physician work. Several commenters again raised the argument that the BBA prohibits us from excluding these clinical staff costs because the BBA requires us to recognize all costs, not just those that can be tied to specific procedures. Many organizations reiterated the claim that the practice of taking staff to the hospital is either typical or prevalent in their specialties. However, only the specialty society representing thoracic surgeons submitted any additional information to support this claim. The STS surveyed their members in July 2000,and reported that 74 percent of the respondents said they employ clinical staff who assist in the hospital, though more than half report that they receive Medicare payment for some of these personnel. Commenters made the following recommendations:

Several organizations contended that hospitals no longer supply the staff to furnish adequate care. In relation to this point, two commenters recommended that the issue of cost shifts between hospitals and other providers is one that we should not ignore, and, if there is any double payment, Part A payment to the affected hospitals should be adjusted.

Another specialty society recommended that we establish a modifier to allow for documentation of and payment for non-physician clinical staff who furnish services in a facility setting. This modifier would indicate whether there is a physician practice expense or a hospital practice expense that has been transferred to the physician practice, to ascertain whether payment should come from Medicare Part A or Part B.

One organization recommended that the SMS data be adjusted by the income received for the work of physician assistants.

Response: We have considered all the comments that we have received on this issue, both on the July 22, 1999 proposed rule and the November 1999 final rule. Though many of the commenters raised interesting points, there were neither new arguments nor evidence presented that would cause us to delay or abandon this policy. While we particularly appreciate the effort undertaken by the thoracic surgeons to develop data on the prevalence of their use of clinical staff in the hospital, the survey addresses only the question of typicality. As stated above, there are two other reasons why we eliminated this clinical staff time. First, we believe that we already pay the facility for the clinical staff needed for patient care. Much of what is claimed as physician's clinical staff time in the facility is either separately billable (as illustrated by the survey submitted by the commenter) or is accounted for in the work RVUs. Furthermore, by law, the hospital itself must furnish all services and items to a hospital patient, either directly or under arrangement. (For a more detailed description of our rationale for this policy, see the November 1999 final rule (64 FR 59402).)

As to the recommendations made by the commenters, we agree that it would be desirable to remove costs associated with these mid-level practitioners from the SMS data as well. This would answer the concern raised by another commenter that removing the clinical staff from the CPEP data introduces further inconsistency with the SMS data. It is for that reason that we had recommended to the AMA that several specific questions be added to the SMS survey to capture the needed information on this clinical staff issue, and we anticipate that we will, in the future, be able to obtain such data.

Although we would be interested in receiving data on the cost shifts between hospitals and other providers, we believe that the suggested use of a modifier for this purpose would be extremely difficult to implement and also burdensome for the practitioner. First, however, we must clarify that, even if the practice of bringing physician staff to the hospital pre-dates the advent of the hospital prospective payment system, any costs associated with such a practice were explicitly included in the hospital Diagnosis Related Group (DRG) payments in the September 1, 1983 interim final rule with comment and in the January 4, 1984 final rule. These rules reference section 1862(a)(14) of the Act, and the discussion makes clear that, with certain limited exceptions, all nonphysician services furnished to hospital inpatients are to be paid under Part A. The exception provided that, for any cost reporting period beginning before October 1, 1986, a hospital that has followed a practice, since before October 1, 1982, of allowing direct billing under Part B to an extent that immediate compliance with the bundling requirements would threaten the stability of patient care, could continue to bill under Part B. There is no indication that the waiver was extended. In response to a comment, we stated the following: ''In order for a payment system that is based on a national average rate for a particular

diagnosis to succeed, it is vital that the services and supplies included in the payment be essentially the same in every hospital. If the statute had not included the rebundling provision, it would have been possible for hospitals to collect the full prospective payment rate for inpatient services and, at the same time, reduce their costs by having outside providers and suppliers furnish many of the necessary services and bill Part B.'' Furthermore, these rules state that, to calculate the PPS standardized amounts, base year costs were adjusted ''to include the costs of services that were billed under Part B of the program by another provider or supplier during the base period but will be billed under Part A as inpatient hospital services effective October 1, 1983.''

We do agree that it would be helpful to determine whether hospitals are still providing the staffing that is assumed in their DRG payments. To this end, we have requested that the Office of Inspector General conduct an independent assessment of staffing arrangements between hospitals and thoracic surgeons.

(iii) Supplies

In the November 1999 final rule, we deleted certain casting supplies from the CPEP data for the casting and strapping CPT codes 29000 through 29750. In the July 2000 proposed rule, we identified additional CPT codes for the treatment of fractures/dislocations and additional casting and splinting supplies that are separately billable under section 1861(s)(5) of the Act. Therefore, we proposed the removal of inputs for fiberglass roll, cast padding, cast shoe, stockingnet/stockinette, plaster bandage, Denver splint, dome paste bandage, cast sole, elastoplast roll, fiberglass splint, Ace wrap, Kerlix, Webril, malleable archbars, and elastics from the following CPT codes: 23500 through 23680; 24500 through 24685; 25500 through 25695; 26600 through 26785; 27500 through 27566; 27750 through 27848; 28400 through 28675, and 29000 through 29750.

Comment: Several specialty societies, representing orthopedic surgeons, podiatrists, and occupational therapists supported our proposal to delete casting supplies from the CPEP inputs for all applicable fracture management and cast/strapping application procedure codes for which these supplies are separately billable. The orthopedic surgery specialty society comment also included a list of non-fracture/dislocation codes for which it recommended deleting casting supplies and another list of non-fracture codes from which the supplies should be deleted if they are separately billable for these services and left in the CPEP data if they are not. This commenter also stated that the soft goods, such as stockinette, that we propose to delete do not currently have a HCPCS code, and requested that these supplies remain on the CPEP list until a separate code is established.

Response: We appreciate the support expressed for our proposal. Consistent with the statute that limits separate payment for casting supplies only to the treatment of fractures and dislocations, we are not deleting these supplies from either of the two lists of additional codes supplied in the above comment. Also, we will delete soft goods, such as stockinette, from the CPEP data for the appropriate codes, because these are casting supplies that may be separately billed. We will, however, also request that HCPCS codes be developed for these items. Therefore, we will implement the policy as proposed.

Comment: A commenter representing dermatologists sought clarification on whether the unna boot would be separately billable. The commenter stated that the unna boot is not in the list of supplies to be deleted from the CPEP data, but CPT code 29580, Application of paste boot, falls within the range of codes listed under this proposal.

Response: We are not deleting the unna boot from CPT code 29580, because this code can be appropriately used for cases other than fractures, and in those cases the supply is not separately billable.

Comment: One supplier of casting supplies agreed with our proposal to delete these casting supplies from the CPEP data, but suggested that we include their product, Procel cast liner, on this list as well, to clarify that it is separately billable.

Response: The purpose of the proposal was not to list all the casting supplies that could be separately billable, but rather to delete from our CPEP input database any casting supplies that are currently listed. Because the Procel cast liner is not currently in our database, it does not need to be deleted.

(iv) Equipment

We currently use the original CPEP definitions for equipment that distinguish between ''procedure specific'' equipment and ''overhead'' equipment. Under the ''top-down'' methodology, the CPEP inputs are used only as allocators of the specialty-specific practice expense pools, and we believe the distinction between types of equipment has served to hinder the process of refining the CPEP inputs while not leading to a substantive distinction in how we value services. Therefore, we proposed to combine both categories of equipment into a single ''equipment'' category, assuming an average 50 percent utilization for all equipment.

We also proposed to delete from the CPEP data equipment that is not used typically with any service, but is on ''standby'' for many services, or that is used for multiple services at the same time. The following is the list of equipment that we proposed to delete from the CPEP inputs of all services: autoclave, wheelchair, refrigerator, film file cabinet, hazard material spill kit, embryo freezer, water system, flammable reagent cabinet, utility freezer, ultra low temperature freezer, acid cabinet, bulk storage refrigerator, abortion clinic security system, abortion clinic security guard, gomco suction machine, doppler, laser printer, lead shielding, defibrillator with cardiac monitor, blood pressure/pulse oximetry monitor, blood pressure monitor, printer, crash cart—no defibrillator, and smoke evacuator.

The following is a list of equipment that we proposed to delete as ''standby'' equipment for most codes, but that we believed typically may be used with a designated subset of procedures:

X-ray view box—four panels (retain when currently in the CPEP data for codes in the range CPT codes 70010 through 79999).

ECG machine—3 channel (retain when currently in the CPEP data for CPT codes 93000 through 93221).

Pulse oximeter (retain when currently in the CPEP data for CPT codes 94620, 94621, 94680, 94681 and 94690; 94760 through 94770, 95807 through 95811 and 95819).

ECG/blood pressure monitor—3 channel (retain when currently in the CPEP data for CPT codes 43200 through 43202 and 43234 through 43239).

Cardiac monitor (retain when currently in the CPEP data for CPT codes 31615 through 31628).

ECG-Burdick (except for HCPCS code G0166).

Comment: All the specialty societies that commented on these proposals were supportive of what one commenter characterized as ''HCFA's efforts to streamline the treatment of medical equipment'' and agreed that the changes will facilitate the refinement process. One of these commenters stated that a standardized utilization rate overstates the use of some equipment and understates it for others and recommended that we continue to seek reliable data on this issue. Another

commenter recommended that we need to provide clear and specific criteria for including medical equipment in the direct practice expense inputs, and gave three possible options—(1) equipment used primarily for a specific procedure or group of procedures; (2) all equipment used for a specific procedure; or (3) all equipment that typically must be available when a specific procedure is performed.

Response: We agree that clear criteria are needed for including equipment in the inputs for a given procedure. The major criterion used for clinical staff time and supplies is that the suggested input must be typically used in the performance of a service to be included as a direct practice expense. We believe that the same criterion should be applied to equipment. This criterion can be applied more clearly than the other options mentioned by the commenters, and, thus, should result in more consistent assignment of equipment across all services. Regarding utilization rates, we did solicit information on specific equipment utilization rates in the 1997 Notice of Intent to Regulate, but very little hard data were submitted. For most specialties, equipment costs are a very small portion of total practice expense, averaging less than 5 percent of the total practice expense per hour for the ''all physicians'' category. In addition, for most equipment, a change in the utilization rate would produce a negligible difference in the practice expense RVUs for any service. Therefore, with perhaps a few specific exceptions, and because of the apparent difficulty in obtaining reliable objective data, we expect that this issue will not be a high priority issue during the refinement process.

Comment: One specialty society agreed that it is appropriate to capture as indirect expense the costs of the equipment that we have proposed to delete. The specialty society expressed concern that the SMS survey would not include most of this equipment as indirect expense, disadvantaging certain specialties who have relatively higher costs for indirect or stand-by equipment. Other commenters questioned how the costs of stand-by and multiple-use equipment can be reflected if the equipment is not included in the calculation of practice expense. One society stressed that, because of the high costs of radiology equipment, it is critical that overhead costs are accounted for.

Response: The commenter raised a valid point about the relationship between the deleted ''indirect'' equipment and the SMS cost pools. The costs for this deleted equipment are included in the SMS cost pools for each specialty. However, we believe this proposal simplifies the refinement of equipment without introducing new problems. First, it is not clear whether much of this equipment, such as laser printers, lead shielding, refrigerators and freezers, cabinets, water systems, security systems, smoke evacuators and hazard material spill kits, would have been included as medical equipment or as indirect costs in the SMS survey. Second, stand-by equipment, such as crash carts, wheelchairs and ECG machines, would often be available for more than one procedure at a time. Allocating costs of these items for every service for which they are available, rather than for services for which they are typically used, can mean that we are allocating more than their actual costs and thus overstating their value. Third, the inclusion of the costs of equipment that is not typically used in a service means that we have different criteria for equipment than we do for other direct inputs. Fourth, most of this equipment is relatively low cost, which is one reason the impacts of this proposal are not significant. We also want to clarify that combining all equipment into one category does not eliminate from the practice expense calculations any of the overhead equipment, such as the most expensive radiology equipment, that is typically used for a given service.

Comment: Societies representing various imaging specialties requested clarification on the doppler that was included in the list of potentially deleted items, because, if this is an image-directed spectral doppler, it should not be deleted. One of these commenters supported the elimination of x-ray boxes because they are no longer typically used in current radiology practice.

Response: The doppler we are deleting from all but the relevant procedures is a hand-held doppler, with a cost of $1350, that can be used on obstetric patients, not the ultrasonic doppler at $155,000.

Comment: A society representing obstetricians and gynecologists recommended that the following equipment that we proposed deleting from all services be retained for specific codes:

The doppler should be retained for the prenatal codes CPT 59400, 59425, 59426, 59510, 59610 and 59618.

The blood pressure and pulse oximetry monitors should be retained for procedures requiring anesthesia or sedation, CPT 58555, 58558, 58120, 58800, 59140, 59160, 59812, 59820, 59840 and 59841.

The suction machine should be maintained for procedures that include evacuation of the uterus, CPT 58120, 59140, 59160, 59812, 59820, 59821, 59840, 59841.

Response: We will retain the doppler, monitor and suction machine for the recommended services. Because these were the only code-specific changes recommended in comments on our equipment proposals, we will be implementing our proposals with only the above changes.

Comment: The American Academy of Dermatology (AAD) wanted clarification on whether we are proposing that dermatology-related standby equipment be assigned to the overhead category, because the specialty gains one percent on the overhead proposal and loses one percent on the standby equipment proposal.

Response: We are proposing to delete from the inputs the identified ''standby'' equipment from those codes for which the equipment is not typically used. It is a coincidence that the impact came out as it did.

Comment: One primary care specialty society recommended that we propose a methodology in the 2001 proposed rule for the use of an alpha-numeric code for billing unusual equipment costs associated with a procedure that are not properly captured in the practice expense data.

Response: We will certainly consider this idea, although we foresee many policy and operational difficulties in implementing this recommendation.

(v) CPEP Anomalies

In the November 1999 final rule, we made corrections to the CPEP data for a number of codes when we learned that the data contained errors and anomalies that we could easily correct. In the July 2000 proposed rule, we listed other egregious errors and anomalies that we are proposing to correct. As we have previously stated, though certain revisions may be made now, all practice expense inputs for these codes are still subject to further comment, refinement, and potential PEAC and RUC review and recommendations. We received the following comments on our proposed corrections.

Comment: A major primary care organization agreed with our decision to correct major errors in the CPEP practice expense data that had been identified by specialty societies. Another association stated appreciation for our correction of the supply list for CPT code 68761 to reflect the cost of a punctal plug.

Response: We are pleased that there was no disagreement on any of the proposed revisions we made in the November 1999 final rule and the July

2000 proposed rule to correct egregious errors and anomalies in CPEP data, with the exception of those discussed below. Therefore, we will be implementing all other changes at this time.

Comment: Two specialty societies, representing obstetrics and family practice, pointed out that we proposed to crosswalk the CPEP inputs for CPT 59618, which includes antepartum care, delivery and postpartum care, from CPT 59410, which only includes delivery and postpartum care. They recommended that we change the crosswalk to CPT 59510, Routine obstetric care including antepartum care, cesarean delivery, and postpartum care.

Response: The above proposed crosswalk was a typographical error. We thank the commenters for pointing this out, and we are now crosswalking the CPEP inputs for CPT 59618 from the inputs for CPT 59510 as requested.

Comment: A specialty society representing interventional radiologists agreed that we had appropriately removed the clinical supplies listed in the facility setting for CPT codes 47510, Insert catheter, bile duct and 47511, Insert bile duct drain. They recommended that these supplies be listed in the office setting, because these are 90-day global services with two post-procedure visits.

Response: We have added post-procedure supplies to these two codes by crosswalking from the supplies assigned to CPT code 45525, Change bile duct catheter, adjusted for two post-visits.

Comment: A radiology specialty society objected to our proposal to crosswalk the inputs of CPT code 78206, Liver image (3D) with flow from the inputs of CPT code 78205, Liver imaging (3D). The specialty society suggested that it will work with the PEAC and RUC to determine the appropriate additional expenses.

Response: We view crosswalks of CPEP inputs as a temporary solution, and we would welcome a recommendation from the RUC.

Comment: One specialty society commented that they had previously identified inaccurate inputs, which lead to anomalous RVUs that we have not yet addressed. The commenter requested the status of these suggested changes for 13 procedures. For 11 of these procedures there is a request to increase the number of post-operative office visits. For CPT code 52276, Cystourethroscopy with direct vision internal urethrotomy, the commenter questioned why the facility practice expense RVUs are much lower than those for CPT 52340, Cystourethroscopy with incision, fulguration, or resection of congenial posterior urethral valves, or congenital obstructive hypertrophic mucosal folds, even though the practice expenses are similar. The commenter also noted that the supply cost for a double stent (CPEP supply code 93119) should be decreased from $359 to $150.

Response: We do not view a request to increase the number of post-operative visits as a correction of an egregious error, because it is not clear without supporting evidence that the current number of post-operative visits in our database is inappropriate. It would be most beneficial to discuss this issue with the RUC, which could then make recommendations to us. In regard to the second issue, CPT 52340, a code that will be deleted in 2001, is a 90-day global service, while CPT 52276 is a 0-day global service and therefore has lower practice expense RVUs. The double stent is currently priced at $179.50. We appreciate the information that this may be overpriced. However, we have awarded a contract to have the prices of all the CPEP clinical staff, supply and equipment inputs updated in time for next year's proposed rule and will revise the costs at that time. If the society has documentation on the correct price for this item, we will send this information to our contractor.

Comment: An association representing psychiatrists reiterated their concern regarding the physician times assigned to the psychotherapy codes that include evaluation and management services (E/M). The society recommended that the times assigned to each psychotherapy E/M code be increased so that the total time would be 7 minutes more than the time assigned to the corresponding psychotherapy code without E/M. The commenter argued that this added time would be equal to the time assigned to CPT 99211, the lowest level office visit with an established patient, and that this corresponds to the adjustment made to the work RVUs for the psychotherapy codes with E/M services. In addition, the comment requested that we make the physician time for CPT 90847, Family psychotherapy (with patient present), equal to CPT 90846, Family psychotherapy (without the patient present) and the time for CPT 90857, Interactive group psychotherapy, equal to CPT 90853, Group psychotherapy.

Response: We agree that an increase of seven minutes in the physician times for the psychotherapy codes with E/M is reasonable, and we will make the appropriate changes in our physician time database. In addition, we also agree that the times for CPT 90847 and 90846 should be equal, as should the times for CPT 90857 and 90853, and we will make those increases in physician time as well.

Comment: The association representing psychiatrists also commented that the clinical staff times for psychotherapy with E/M services are underestimated and questioned why we did not correct this as an egregious error.

Response: We included as egregious errors and anomalies only those instances where there was a clear error or anomaly in the CPEP data and also where the correct input would be obvious, without the benefit of a multi-specialty recommendation. We did not consider the clinical staff times for psychotherapy codes to fall into that category; in fact, we have concerns that the clinical staff time for most of the psychotherapy codes is, in fact, overstated. Therefore, we believe that this issue might better be dealt with initially by the RUC.

Comment: A manufacturer of diathermy equipment commented that the practice expense RVUs for CPT code 97024, Application of a modality to one or more areas; diathermy, are undervalued. The commenter stated that this payment rate will threaten the ability of providers to make this service available to the Medicare population.

Response: In checking our direct cost inputs for this service, neither the clinical staff time nor the supplies seem inappropriate. The issue appears to arise from a discrepancy in the cost of the diathermy machine itself. The machine in our database is priced at $2850. The price range quoted by the manufacturer is for $18,000 to $30,000. There is obviously a wide range of machines available, and we will need to determine the most typical cost to a practice. As mentioned earlier, we have granted a contract to re-price all of our direct cost inputs, including equipment. We would welcome information on this and other equipment used by practitioners and would find recent invoices particularly helpful.

(d) Calculation of Practice Expense Pools—Other Issues

(i) Technical Refinement to Practice Expense Pools

The Act requires payment of some practitioner services (services of certified registered nurse anesthetists, nurse practitioners, clinical nurse specialists, physician assistants, and certified nurse mid-wives) based on a percentage of the physician fee schedule payment amount. Since the payment under the physician fee schedule for a service performed by a mid-level

practitioner is required to be based on a percentage of the amount paid to a physician for a service, we proposed using only physician practice expense data in determining the practice expense RVUs for each practitioner service. Removal of the services performed by mid-level practitioners from the practice expense calculations would assist in simplifying the methodology and would also be consistent with the statutory requirement that we pay for their services based on a percentage of the fee schedule amount.

Comment: A primary care organization expressed concern that removing the services performed by mid-level practitioners from the practice expense calculations might have implications that were not discussed in the proposed rule. The comment encouraged us to withdraw the proposal until there is more information and a thorough discussion of the issue. The AMA stated in its comment that it would be difficult for us to include such mid-level practitioner data since we do not have reliable information concerning the extent to which these practitioners are self-employed or are employed by physicians. The comment further noted that we have recommended that the AMA request in any practice expense survey the amount of revenue and patient care hours generated by mid-level practitioners. Another primary care organization agreed that this proposal will make the methodology more consistent with the statutory requirement.

Response: The statute specifies the payment amounts for practitioners such as nurse practitioners, physician assistants, and certified nurse specialists. Because payment for these practitioners is not based on the calculation of their own practice expense cost pools, we are removing these services from the practice expense computations and will consider further adjustments as additional information becomes available.

(ii) Medicare Utilization Data

We have received, in response to previous rules, comments from several surgical specialties urging us to evaluate the Medicare claims data to eliminate potential errors in the specialties associated with each service. In the June 2000 proposed rule, we described the analyses we ran to determine whether potential errors in the claims data have an adverse impact on any specialty or merely represent ''noise'' that creates no significant effect. We tested, for neurosurgery, ophthalmology and otolaryngology, the impact of reassigning to the dominant specialty the small proportion of allowed services associated with specialties not expected to perform these services. The impacts did not even approach a 1-percent increase or decrease in any scenario.

We stated our belief that these simulations demonstrated that the small percentage of potential errors in our very large database have no adverse effect on specialty-specific practice expense RVUs. Therefore, we did not propose any further action at this time.

Comment: One surgical specialty society expressed concern that we had dismissed the impact of less than 1 percent as inconsequential and encouraged us to develop a software program to reassign obvious errors in the specialty-specific assignment of procedures to the appropriate specialty.

Response: We believe that developing software would not be an easy solution to what we still see as an issue of little significance for the calculation of practice expense RVUs. On what basis do we decide what an obvious error would be? At this time, we do not have policies that limit payment for given services to only certain physician specialties, and we are not convinced that the medical community would actually support our doing this. In addition, because many services are performed appropriately by more than one specialty, on what basis would we decide to which specialty the services should be reassigned? Therefore, though we would certainly want the possible error rate to be zero, at this time we do not plan to propose any changes in our method of handling the utilization data for the purposes of calculating practice expense.

(iii) Allocation of Practice Expense Pools to Codes

In the July 2000 proposed rule, we discussed the work The Lewin Group had recently begun on the third phase of the project, which concentrates specifically on evaluating the indirect cost allocation methodology and considers alternatives to allocating indirect costs by the current method. We expect their report on this analysis, which will be placed on our website, to be available soon.

Comment: Two specialty societies commented that we should develop and implement ways to reduce or eliminate the pool leakage that can occur in the weight-averaging step of our methodology when procedures are performed by multiple specialties. One commenter argued that the problem is in the allocation formula that sets up the leakage, not the averaging.

Response: These comments refer to methodological issues surrounding the development of the practice expense relative value units under the ''top down'' methodology. We use a combination of data on practice expense per hour from the SMS survey, the time estimated to perform individual procedures and Medicare utilization data to create aggregate cost pools. These cost pools are allocated to individual codes. Once the costs are allocated, estimates of practice expenses for individual procedures are then weight-averaged by the specialties performing each procedure to produce practice expense RVUs for a procedure. The above commenters are concerned that this process does not result in practice expense payments to each specialty that equal the aggregate cost pools. To the extent that there is ''pool leakage,'' it implies that an individual specialty's practice expense payments are less than its aggregate practice expense pool. The implication of the comments we have received on this issue is that specialties that receive aggregate cost payments that are less than the aggregate cost pools are underpaid. We disagree. As we indicated in the November 1999 final rule (64 FR 59390), we believe it is more likely that the aggregate practice expense pools are overstated, rather than that aggregate practice expense payments to a specialty are too low.

As we indicated both in that rule and in the June 5, 1998 proposed rule (63 FR 30832), there are two potential sources of bias in the practice expense per hour data that may result in an overstatement of the aggregate practice expense pool. First, mid-level practitioners may have been included in the numerator of the practice expense per hour calculation even though there is generally separate payment for their services. Thus, a mid-level practitioner would be analogous to an employee physician who also generates revenue and whose costs are not included in the practice expense calculation, rather than to a registered nurse or other practitioner who cannot furnish a separately billable service. Second, the mid-level practitioner's hours spent are not included in the denominator of the practice expense per hour calculation even though, like a physician, the mid-level practitioner is generating patient care revenues during the hours spent in patient care. To the extent that a specialty depends on the use of mid-level practitioners, then the aggregate specialty practice expense pools are likely to be overstated. Based on information in our utilization data and comments made to us by one of the

commenters, we believe this is the case with thoracic surgery. Rather than developing a process that ensures that aggregate practice expense payments are equal to overstated aggregate practice expense pools, we believe the better option is to address the issue of mid-level practitioners in the practice expense methodology. In this final rule, we have already addressed one aspect of this issue. Specifically, we have eliminated any utilization data that reflects that the service was performed by a mid-level practitioner. The other aspect of this proposal that we would like to address is the practice expense per hour calculation itself. As we have indicated elsewhere, we are interested in addressing this and other issues related to the practice expense methodology as we develop long-term plans for refining the practice expense RVUs beyond 2002.

(iv) Zero Work Pool

There were no proposals in the July 2000 proposed rule on this issue. However, in the November 1999 final rule, we implemented the proposal to remove requested services from the zero work pool and return them to the specialty-specific cost pools.

Comment: Many specialty societies and the AMA expressed approval of our decision to remove a list of CPT codes from the ''zero work pool'' in response to specific requests to do so. Other organizations, representing specialties with technical services, supported our decisions—(1) not to modify the practice expense RVUs for diagnostic imaging ''zero work'' services in any substantial way at this time; and (2) to keep the zero work pool intact, at least until we can develop a methodology that accurately captures TC costs. Several commenters did express a concern that we erroneously removed from the pool an amount equal to the increased payment the removed services would receive in their own pools, rather than the payment rate the services were assigned in the zero-work pool. Another specialty society representing TC providers argued that the RVUs of the codes remaining in the pool should have been maintained at their previous level.

Response: We are pleased that there is general support of our adjustments to the zero work pool. With respect to the concern expressed, we did deal with the removal of services from the zero work pool in a manner that seems consistent with the views of the commenters. We only subtracted from the pool the dollars for the utilization associated with the removed services, which would represent the rate the services were assigned in the zero-work pool, not the increased rate in the specialty-specific pool. With regard to the recommendation that the RVUs of the remaining services in the zero-work pool should be maintained in spite of any adjustment we make, we believe that such an approach would be unfair to the other services in the fee schedule whose practice expense RVUs are not similarly protected from the effects of changes we make in the practice expense calculations.

(e) Site of Service

Clarifying the Definition of Facility/Nonfacility

In the July 2000 proposed rule, we clarified the definition of facility and nonfacility sites of service for the purposes of practice expense calculations. This distinction takes into account the higher expenses of the practitioner in the nonfacility setting. The major purpose of this distinction is to ensure that Medicare does not duplicate payment, to the physician and to the facility, for any of the practice expenses incurred in performing a service for a Medicare patient. For purposes of the site-of-service, we have defined hospitals, skilled nursing facilities (SNFs), and ambulatory surgical centers as facilities, because they will receive a facility payment for their provision of services. In the July 2000 proposed rule, we proposed to revise § 414.22(b)(5)(i) (Practice expense RVUs) to define community mental health centers (CMHCs) as facility settings since CMHCs also receive a separate facility payment for their services.

In addition, we clarified that the nonfacility practice expense RVUs should be applied to all outpatient therapy services (physical therapy, occupational therapy, and speech language pathology), even when they are provided in a facility. Only the facility can bill for therapy services furnished to hospital and SNF patients. Because there will be only one bill for this service and because the payment must reflect the practice expenses incurred in furnishing the service, the higher nonfacility RVUs are used to pay for therapy services even in the facility setting.

Comment: Three specialty societies representing gastroenterologists reiterated their disagreement with our site-of-service policy because they believe—

- The policy offers a financial incentive for physicians to perform certain gastroenterological procedures in their offices, rather than in an ASC or hospital outpatient department;
- The policy allows the procedures to be furnished in a physician's office that does not have to meet accreditation standards;
- The wide divergence between the payments in the two settings may be encouraging the performance of gastrointestinal procedures by non-gastroenterologists; and,
- This reduction of payments for endoscopy services in the facility setting is contrary to the intent of the statute.

The commenters had varying recommendations on this issue: one comment urged us to provide the same practice expense RVUs in the facility and nonfacility settings for 18 endoscopic gastroenterological procedures. Another commenter suggested that because we now pay therapy services at the nonfacility rate regardless of setting, we should do the same for the colorectal screening codes. A major specialty society stated that it is in the process of working with gastroenterology societies to develop a proposal to create a single site-of-service payment rate for those services that are furnished less than 10 percent of the time in the office.

Response: We believe that some of the commenters continue to misunderstand the reasons for the distinction between the facility and nonfacility sites of service and the actual implications of this distinction. We have perhaps added to this confusion by continuing, on occasion, to use the term ''site-of-service differential'' to describe this policy. Under the charge-based practice expense methodology, there was an actual differential; certain services were automatically reduced by a pre-determined amount when furnished in the facility setting. However, in our current resource-based ''top-down'' approach, we employ no such reduction. Rather, we carry out the statutory requirement to develop practice expense RVUs that reflect the relative resources involved with furnishing each service. We doubt that any specialty society would argue that the direct costs of performing a service in the office setting are not higher than in the facility setting. In the office setting, the physician must bear the costs for all of the clinical staff, supplies and equipment needed to perform a given service; in the facility setting, these costs are the responsibility of the facility. Our RVUs reflect the relative resources used in furnishing the service in each of the facility and nonfacility settings. Therefore, to the extent that we have correctly identified the relative direct costs, there should be no

incentive to perform a service in either setting. It is true that we pay more to the physician if the service is furnished in the office, but that is because greater resources are involved with furnishing the service in that setting. The fact that there is a significant difference between the facility and nonfacility payment for any given service seems to us both expected and appropriate. We believe that properly reflecting the relative resources involved with furnishing services in the facility and nonfacility settings creates no incentive to perform a service in one setting or another. In contrast, a policy that paid the same amount for a service furnished in a facility and nonfacility setting would create an incentive to furnish the service in the facility setting and, thus, would not be incentive-neutral.

We have serious reservations about adopting a policy to develop a single site-of-service payment for services that are furnished less than 10 percent of the time in the office. First, if there are real concerns regarding patient safety when certain procedures are furnished in the office, sufficient evidence should be presented to the relevant parties so that an appropriate coverage decision can be made. We emphasize that such a decision would be a coverage decision, and would not be a payment policy issue. Second, a 10-percent threshold could eliminate payment in the office setting for some high-volume procedures done thousands of times there. Third, we have some concern that this issue may be a matter of contention between those specialties that generally perform procedures in physician-owned ASCs and other specialties that would utilize the office setting. We would suggest that this issue, either as a general proposal or on a code-specific level, be discussed in the PEAC/RUC, where a multi-specialty recommendation could then be submitted to us.

The site-of-service policy for therapy services mentioned by a commenter as a precedent is not applicable to other services in the physician fee schedule. As described above, the facility itself must bill for both the technical and professional portion of the therapy service; in these circumstances, the therapist does not bill Medicare at all. Therefore, the nonfacility RVUs are used to ensure that the facility is paid for the direct costs incurred in the service.

Comment: A specialty society representing pediatricians believed that the site-of-service differentials will likely have an adverse impact on pediatric specialty care that is primarily hospital-based. Most pediatric sub-specialists, most of whom are not hospital-employed, incur practice expense (in the form of a lease or rent) when they provide ambulatory services in a hospital-owned facility. This expense most typically includes administrative and clinical staff.

Response: We would need more information on the scenario described before we can formulate a definitive response on this issue. For example, it is not clear whether these pediatric services as described would always be considered ''facility'' services. A visit to a physician's office that is leased from a hospital could, in many circumstances, be considered a ''non-facility'' service by Medicare, if there is not a Part A bill for the same service. In addition, indirect expenses, such as rent or administrative staff salaries, are treated the same in all sites under our methodology. We would welcome further discussion on this issue.

Comment: A comment from an association representing providers of services in long-term care facilities contended that there should be a site-of-service differential for settings such as SNFs, where patient acuity is higher and where services must be transported to the patients. Use of data from the SMS survey for services performed outside of the physician's office is not appropriate. An occupational therapy association stated that, though they concur with our clarification that therapy services would always be paid at the nonfacility rate, the resources necessary to provide therapy services in facilities are not adequately reflected in our practice expense calculations. A commenter representing geriatricians commented that pre-and post-care involved in nursing home visits are not reflected in the nursing home visits.

Response: The practice expense RVUs for the office and facility settings differ primarily as a result of the differences in the direct costs in these sites. Because the SNF would bear the costs of the clinical staff, supplies and equipment, the cost to the practitioner is less than it would be in the office setting. It is not clear to us how the acuity of the patients in a SNF would affect the direct practice expense costs of the practitioner, or what resources are not reflected in our calculations, since the practitioner is not responsible for the direct costs in that setting. If there is clinical staff time for staff back in the office associated with nursing home visits, this issue should be brought to the attention of the PEAC/RUC, because they are considering an approach to standardizing ''coordination of care'' clinical staff times for various services to make recommendations to us on this issue.

Comment: A long-term care association recommended that we clarify our policy on mixed facilities, which are SNFs that also have nursing home beds, to state that the presumption should be made that the therapist is treating a nonfacility patient. A society representing podiatrists requested confirmation of this policy.

Response: We do not agree that the above recommendation would be a clarification of our policy on ''mixed'' facilities. We explicitly stated in our July 1999 proposed rule that a service in a mixed facility should be designated as a facility service (that is, the place of service would be a SNF), unless the practitioners can verify that no Part A claim will be made for the service. In the latter case, the place of service would be a nursing home, and the service would be paid at the nonfacility rate. We did not change this policy in our November 1999 final rule, and we believe that this is an appropriate policy.

Comment: Commenters were supportive of the expansion of the definition of facilities to include community mental health centers (CMHCs). However, one commenter, representing a state health department, requested that we clarify the distinction between CMHCs and other types of community mental health entities to which this would not apply.

Response: A CMHC is a distinct type of facility certified for Medicare participation for the purpose of providing ''partial hospitalization services''. As we had explained in the proposed rule, Medicare payment to a facility typically includes the cost of services furnished. If an entity is not participating in the Medicare program, the nonfacility practice expense RVUs would apply to the services. We believe this may not have been clear in the proposed rule. We are revising § 414.22(b)(5)(i)(A) to specifically provide that, for calculation of practice expense RVUs, a CMHC is considered to be a facility and revising § 414.22(b)(5)(i)(B) to parallel the language of § 414.22(b)(5)(i)(A). We also specify that the nonfacility practice expense RVUs are applicable to outpatient therapy services regardless of the actual setting.

Comment: One organization commented that the proposed rule did not address coverage or payment for ''inpatient'' only services performed in the outpatient setting, and referenced the outpatient PPS rule published April 7, 2000.

Response: This issue is addressed in the outpatient prospective payment system rules.

(f) Other Practice Expense Issue

Comment: One specialty society recommended that we keep the practice expense RVUs that will be fully resource-based in 2002 as interim RVUs for a minimum of another three years, during which we would consider comments for further code-level refinement.

Response: As long as there is a good faith effort on the part of all parties to continue the quality work that the PEAC/RUC has already undertaken, we do not plan to close the door on further code-level refinements in 2002. We understand the magnitude of this task and have an interest in ensuring that there is sufficient time to deal with the CPEP inputs of all services in a thoughtful and equitable manner.

Comment: A specialty society representing neurological surgeons made a number of comments critical of the methodology used to allocate practice expenses. These criticisms pertained to virtually every aspect of the methodology. For instance, there was criticism of the CPEP data, the SMS data, and the idea that indirect practice expenses are a function of the amount of time spent in patient care activities. The commenter further indicated that the ''cursory efforts to 'validate' CPEP data by having it reviewed by RUC's Practice Expense Advisory Committee (PEAC) seems more *pro forma* rather than have it based on some independent appraisal of the real costs that may be involved.'' In addition to the criticism cited above with respect to the methodology for allocating indirect costs, the commenter suggested that we should have summed the three indirect cost categories (administrative labor, office expense, and other expense), and allocated the result to individual codes based on the work RVUs. The commenter suggested that this was a better method than the ''unnecessarily tortuous'' approach we adopted that ''used the total SMS pool and divided it by the pool of direct expenses * * * to generate a scaling factor that represented the fraction of the total that the CPEP data calculation claimed as direct.'' In addition, the commenter objected to a ''single adjustment'' of 25 percent made to the Harvard physician time data that are being used to generate the practice cost pools. They indicated that this adjustment distorts time values for many codes. The commenter suggested that RUC time data would be more reliable than Harvard time data and that we should consider establishing a rank order reliability in the time data based on dependability of the process that generated the time values. For instance, the commenter suggested that operative logs would provide a measure of skin-to-skin time for intraoperative portion of surgical procedures that should rank above a group of estimates of the same time made by surgeons.

Response: With respect to the criticism of the CPEP data, we acknowledge that there are limitations and anomalies in the data that may distort values for some services. As required by the BBA, we have established a refinement process that will address the inputs for many codes. In this final rule, we are reflecting refinements to the practice expense inputs for office visits and office consultations. As a result, services that account for approximately 22 percent of Medicare allowed charges for physicians' services will have been reviewed and the inputs been refined. As we describe elsewhere in this rule, we are making other refinements with respect to how equipment costs are being allocated, and we are continuing to consult with the PEAC on developing supply cost packages that will facilitate refinement of this aspect of the practice expense inputs. Although the commenter believed that surveys of physician practices for resource inputs would be an improvement over the scrutiny being applied by the PEAC, we disagree. A survey process to collect direct cost inputs for the over 7,000 procedures on the Medicare physician fee schedule would be enormously expensive and time consuming and may be unlikely to yield better results than are being recommended by the RUC/PEAC. We believe the RUC/PEAC process allows for a multispecialty review of inputs for particular procedures. These RUC/PEAC recommendations have been helpful to us in simplifying the number of data inputs going into individual codes and in improving the overall quality of the data that are being used to determine practice expense RVUs.

With respect to the indirect methodology, the commenter is essentially suggesting that we abandon the direct inputs and use the work RVUs as the basis for allocating all indirect costs. While this approach may be simpler, we disagree that such a methodology will improve overall equity in Medicare payment for physicians' services. It would, of course, likely increase payments to specialties with relatively high work values and low direct costs. Furthermore, we do not believe this approach would be consistent with the statutory requirement to recognize ''all staff, equipment and supplies and expenses'' in determining the practice expense RVUs.

We do agree with the commenter that it may be helpful to validate physician time data using independent information sources such as operative logs. In fact, as we described in the July 2000 proposed rule (65 FR 44202), we have several efforts underway to obtain information on times spent performing individual procedures, including using inpatient and outpatient records and operative reports on skin-to-skin surgical times for selected procedures.

Comment: One surgical specialty society reiterated its contention that we have not been providing the impact analysis required by the BBA and requested that we do so. The osteopathic surgeons requested that we publish the impacts rounded to a tenth of a percent and that we display the impact for the entire period of the transition rather than for the individual year. A society representing radiation oncology also requested that we expand the percentage of impact by several decimal places; although the impact table for radiation oncology displays zero percentage impact for each category, there is a total increase of one percent. An ophthalmology society requested that we publish more detailed impacts, and enumerated five additional impact analyses or tables we should include in the final rule. Three other specialty societies urged us to conduct the sensitivity analyses recommended by the GAO, because, without knowing the effect of a change in methodology or data, it is difficult to know whether the proposed change is acceptable.

Response: We have addressed these comments in previous rules. We provide a discussion of impacts in each proposed and final rule. We also provide detailed information on the HCFA web page, which allows any group to select services of interest and determine the impacts resulting from payment rates.

Comment: A commenter suggested that we should identify a way to incorporate the cost of compliance with regulations into the practice expense payments or into the annual updates to the physician fee schedule.

Response: To the extent that these costs are due to increased clinical or administrative staff time, the SMS or supplementary surveys should reflect these expenses, so they are already reflected in the practice expense calculations.

Comment: A specialty society representing podiatrists requested

clarification concerning the reduction in practice expense RVUs for CPT code 11750, Removal of nail bed, as compared to the previous charge-based RVUs.

Response: Because the charge-based practice expense RVUs were not based on the resources used to perform a service, the payment for many services either increased or decreased, some significantly, when we implemented resource-based practice expense. In themselves, such changes are not indicative of an error in our calculations. A comparison to the values assigned to codes in the same or similar families would be more important. It appears that the fully implemented practice expense RVUs for CPT 11750 are in the same range as the values for related services. If the specialty society believes this is not the case, we would need more information as to which codes' values appear anomalous.

Comment: An occupational therapy association noted that the fully-implemented practice expense RVUs for CPT 97110, Therapeutic exercises are greater than those for CPT 97530, Therapeutic activities, even though the CPEP inputs that we accepted should be the same for both services. The commenter also questioned why, in the November 1999 final rule, the practice expense RVUs for the occupational therapy evaluation and re-evaluation services, CPT 97003 and 97004, were lower than those for the physical therapy evaluation and re-evaluation services, CPT 97001 and 97002.

Response: We checked the CPEP inputs for CPT codes 97110 and 97530. The time associated with the use of procedure-specific equipment for CPT 97110 was inadvertently overstated, causing a slight increase in the equipment cost for that service. We have corrected this error. In addition, as we explained in the November 1999 final rule, we deleted the tables in the equipment lists from CPT 97530 because we believed the service would typically be performed while the patient was standing. However, even when two services have identical inputs, the final practice expense RVUs can differ, if a different mix of specialties perform the two services. One reason for the difference between the occupational and physical therapy evaluation and re-evaluation services is that the occupational therapy codes were only valued by one CPEP panel. The physical therapy codes were valued by two CPEP panels, one of which estimated higher staff times than the other, giving these codes a higher average time. The refinement of these codes should remove this issue, although, for the reason explained above, the practice expense RVUs may still not be identical.

Comment: Two organizations representing audiologists submitted a joint comment which reiterated their concern regarding our use of data from the other specialties that perform audiology services to calculate the practice expense RVUs for these services. The specialty society intended to perform a survey of audiologists' practice expenses in order to gather more accurate data.

Response: We have published the criteria and process for the submission of specialty-specific supplementary survey data. We would welcome this additional information.

Comment: A specialty society representing geriatricians contended that this specialty requires more office space than other providers and wanted us to increase the space requirements beyond what is allowed for internists. They believe we have set a precedent for this by altering the space allotment for physician and occupational therapists.

Response: Under our current practice expense methodology, we do not have space requirements for any physician specialty. The amount of office space needed would presumably be reflected in the SMS indirect costs for each surveyed specialty, but we have no way of knowing what this is, or of making an adjustment to these costs for a given specialty or sub-specialty. The adjustment for the physical therapists was a different issue. Because we believed that the crosswalk to the ''all physician'' rate that we used for physical therapy would overstate the indirect costs, we substituted a lower rate based on a study of physical and occupational therapists that computed costs for therapy services partially on the space used for therapy agencies and later made an adjustment to that rate. This adjustment would have no relevance to any other specialty.

Comment: A commenter objected to the use of salary equivalency guidelines to determine the indirect cost pools for physical therapists. The commenter indicated that the original estimate of 250 square feet was insufficient to reflect expenses for therapists in private practice. While we agreed that these space requirements were insufficient and increased the space to 500 square feet, the commenter continues to believe that the salary equivalency data is not an accurate measure of the expenses associated with operating a physical therapy office since these apply to therapy services furnished by an outside contractor to an outpatient hospital, skilled nursing facility, home health agency, clinic, rehabilitation agency or public health agency.

Response: In general, we believe it is better to use data that reflect a specific physician specialty or nonphysician practitioners' costs if they are available. For the direct expense items (clinical staff, equipment and medical supplies), there was no data available for physical therapy so we used a crosswalk to the all physician rate. For the indirect cost items, we used the information that is directly applicable to physical therapy for use in the practice expense methodology. While the use of salary equivalency guidelines data may have been developed for contract physical therapists providing services in facilities, we believe that a potential shortcoming for its use is related to the number of square feet of space that are allotted for each therapist. In response to previous comments we increased the space allocation to 500 square feet in the November 1999 final rule (64 FR 59404). While we are currently using 500 square feet for the space allotment and believe that that amount may recognize some components of indirect costs, the figure still may understate the space requirements for private practice physical therapists because it does not recognize other components of indirect costs that are not incurred by contract physical therapists working in a facility setting. In an earlier comment, the American Physical Therapy Association indicated that 250 square feet is inadequate for physical therapists in private practice. The comment indicates that approximately 700 to 850 square feet per therapist are necessary. We are increasing the space requirements from the salary equivalency guidelines for physical therapy to 750 square feet. This revision will result in use of the following practice expense per hour for physical therapy for calculation of the 2001 practice expense RVUs:

Clinical staff	Admin staff	Office expense	Supplies	Equipment	Other	Total
12.3	5.8	7.5	7.3	3.1	4.4	40.4

Comment: Many individuals and several specialty groups expressed concern about the relatively low rates contained in the July 2000 proposed rule with respect to pain management services. They suggested that this may be due to the practice expense component for these services being undervalued. They also pointed out that a few of the services seemed to have significant reductions.

Response: A few of the pain management codes were affected by a programming error related to work RVUs. We apologize for the error and ensured that this was corrected in this final rule. To the extent that the rates are low due to the practice expense component being undervalued, we would recommend that specialty groups forward the codes in question to the RUC/PEAC for refinement.

B. Geographic Practice Cost Index Changes

The Act requires that payments vary among fee schedule areas to the extent that resource costs vary as measured by the GPCIs. Section 1848(e)(1)(C) of the Act requires us to review and, if necessary, adjust the GPCIs at least every 3 years. This section of the Act also requires us to phase in the adjustment over 2 years and implement only one-half of any adjustment in the first year if more than 1 year has elapsed since the last GPCI revision.

The GPCIs were first implemented in 1992. (A detailed discussion of the development of the GPCIs and references to obtaining studies on the development of the GPCIs can be found in the July 17, 2000 proposed rule (65 FR 44189).) The first review and revision was implemented in 1995, and the second review was implemented in 1998.

The 2001 through 2003 GPCIs represent the third GPCI update. The 2002 GPCIs (Addendum D) are the fully-revised GPCIs. The 2001 GPCIs (Addendum E) represent the one-half transition GPCIs. Addendum F shows the estimated effects on area payments of the fully-revised 2002 GPCIs. The payment effects in 2001 will be about one-half of these amounts.

The same data sources and methodology used for the 1998 through 2000 GPCIs were used for the 2001 through 2003 GPCIs. The only differences between the 1998 through 2000 GPCIs and the proposed GPCIs are in the cost shares and RVU weighting.

1. Work Geographic Practice Cost Indices

The work GPCIs are based on the decennial census. The 1992 through 1994 work GPCIs were based on 1980 census data because 1990 census data were not yet available. The work GPCIs were revised in 1995 with new data from the 1990 census. New census data will not be available again until after the 2000 census. We searched for other data that would enable us to update the work GPCIs between the decennial censuses, but no acceptable data sources were found.

We therefore made no significant changes to the 2001 through 2003 work GPCIs from the 1998 through 2000 work GPCIs, other than the generally negligible changes resulting from using 1998, rather than 1994, RVUs for this GPCI update, because we were unable to find acceptable data for use between the decennial censuses. We believe that making no changes is preferable to making inaccurate changes based on unacceptable data. We believe that this is a reasonable position given the generally small magnitude of the changes in payments resulting from the changes in the work GPCIs from the 1980 to the 1990 census data.

2. Practice Expense Geographic Practice Cost Indices

a. Employee Wage Indices

As with the work GPCIs, the employee wage indices are based on decennial census data. For the same reasons discussed above pertaining to the work GPCIs, we are not changing the employee wage indices during this GPCI update.

b. Rent Indices

The office rental indices are again based on HUD residential rent data. No changes have been made in the methodology. The rental indices are based on 2000 rather than 1994 HUD data.

c. Medical Equipment, Supplies, and Miscellaneous Expenses

As with all previous GPCIs, this component will be given a national value of 1.000, indicating no measurable differences among areas in costs.

3. Malpractice Geographic Practice Cost Indices

As with the previous GPCIs, malpractice premium data were collected for a mature ''claims made'' policy with $1 million to $3 million limits of coverage, with adjustments made for mandatory patient compensation funds. The only difference is that we proposed to use more recent data. The proposed malpractice indices are based on 1996 through 1998 data, compared to the 1992 through 1994 data used in the previous GPCI update.

We received the following comments and responses on our proposed GPCI changes.

Comment: One commenter stated that Medicare physician reimbursement should not vary by geographic area.

Response: The law requires that payments vary among payment localities as locality cost differences vary as measured by the GPCIs. However, the work GPCI by law reflects only ¼ of the difference in the relative value of physicians' work in the area and the national average.

Comment: One commenter stated that we should not use census data on the earnings of other highly educated professionals as a proxy for physician earnings. The commenter suggested that we instead use IRS income tax data on actual physician income, which also has the advantage of being available on an annual basis rather than every 10 years like the decennial census.

Response: As stated in this year's proposed rule and in all previous reports on the GPCIs, the actual reported earnings of physicians were not used to adjust geographical differences in fees because the fees are in large part a determinant of the earnings. We believe that the earnings of physicians will vary among areas to the same extent that the earnings of other professionals vary. The GPCI compares average hourly wages of professionals among geographic areas. IRS data on the earnings of physicians and other professionals were previously examined as a possible work GPCI data source. The IRS data were rejected for numerous reasons, chiefly because—(1) they did not control for hours worked, and thus, average hourly earnings could not be determined; (2) the business tax returns of physicians and other professionals include entrepreneurial return, as well as the opportunity cost of time (what a physician on salary could earn per hour); and, (3) the business returns contain no information on the number and mix of employees (physicians are included with other nonphysician employees). The Medicare physician fee schedule is based on the principle that fees should reflect costs, such as opportunity wages, but not other factors, such as entrepreneurial profit.

Comment: Two commenters stated that the rent GPCI for Puerto Rico is severely understated. They believe the HUD rental data to be inordinately low relative to the national average because of the high level of poverty in Puerto Rico. They believe that physician rents are relatively higher compared to the national average than reflected by the

HUD data. The commenters suggested that we fund a special study to examine the rental costs in Puerto Rico to see if the HUD rent proxy is inadequate to reflect physician rental costs, and, if so, to expand the study to other areas with inordinately high poverty rates.

Response: For the next GPCI update, we will again look for alternative sources to the HUD data.

Comment: One commenter whose malpractice GPCI would have decreased under the proposed rule stated that this would reflect decreasing malpractice premiums, while in reality their malpractice premiums have increased since 1997, and, therefore, their malpractice GPCI must be wrong.

Response: A decreasing malpractice GPCI does not necessarily reflect decreasing malpractice premiums. An area's malpractice GPCI reflects its relative position compared to the national average. An area could have increasing malpractice premiums and still experience a decrease in its malpractice GPCI if its premiums increased less than the national average rate of increase.

Comment: A commenter from Kansas commented that Kansas prohibits territorial rating of malpractice premiums within the State; yet we show two different malpractice GPCIs for Kansas. They state that one of these must be an error.

Response: We agree. Kansas is a single statewide locality under the physician fee schedule. We show two sets of GPCIs because Kansas is served by two carriers. However, the GPCIs should be the same. The malpractice GPCI shown in the proposed rule for carrier 00740 was erroneous. Both carriers should have the same malpractice GPCI of 0.823.

Result of Evaluation of Comments

The 2002 fully-effective revised GPCIs and the transitional 2001 revised GPCIs can be found at Addendum D and Addendum E, respectively. No changes were made in the 2002 and 2001 GPCIs from those proposed in the July 17, 2000 proposed rule, except to correct the erroneous Kansas malpractice GPCI discussed above. Since the revised GPCIs could result in total payments either greater or less than payments that would have been made if the GPCIs were not revised, it was necessary to adjust the GPCIs for budget neutrality as required by law. Therefore, we adjusted the 2001 through 2002 GPCIs as follows: work by 0.99699; practice expense by 0.99235; and malpractice by 1.00215.

C. Resource-Based Malpractice Relative Value Units

Resource-based malpractice RVUs replaced the prior charge-based malpractice RVUs on January 1, 2000. A detailed description of the methodology used in establishing the 2000 malpractice RVUs can be found in the July 1999 proposed rule (64 FR 39610) and the November 1999 final rule (64 FR 59383). The 2000 malpractice RVUs are based on 1993 through 1995 malpractice insurance premium data, the latest data available when we began collecting data to establish the resource-based malpractice RVUs. We stated in last year's proposed and final rules that we were collecting more recent premium data, and would update the malpractice RVUs as soon as we had finished collecting and analyzing the more recent data.

In the July 2000 proposed rule we stated that we had obtained, and were currently examining, malpractice premium data for 1996 through 1998. We provided a table that compared the 1993 through 1995 average premiums (used to calculate the 2000 malpractice RVUs) with the 1996 through 1998 average premiums (used to calculate the 2001 malpractice RVUs). The table showed that there was very little change in the national average premiums from 1993 through 1995 to 1996 through 1998. We, therefore, anticipated minimal changes in malpractice RVUs from use of the more recent data.

In addition, in response to comments received on last year's rule, we proposed to accept a comment regarding crosswalking specialties. We proposed to crosswalk surgical oncology to general surgery rather than to all physicians. We also indicated that the malpractice values to be included in the final rule reflecting the updated data would remain interim.

Comment: Numerous commenters commended the use of more recent 1996 through 1998 malpractice premium data to replace the 1993 through 1995 data in calculating the malpractice RVUs.

Response: We plan to use the most recent available data in updating malpractice RVUs.

Comment: Commenters stated that since the proposed 2001 malpractice RVUs were not available for comment in the July proposed rule, and are being seen for the first time in this final rule, they be considered interim and subject to comment and revision.

Response: We agree. The proposed 2001 malpractice RVUs will be considered interim, subject to revision in 2002 based on comments received on this final rule.

Comment: Some commenters stated that they were unable to duplicate the malpractice RVU calculations using the premium data and risk factors shown in our previous proposed and final rules. They requested that we provide them with all necessary information to reproduce the malpractice RVUs.

Response: To address this concern, we had our contractor, KPMG Consulting, prepare a technical addendum. This addendum presents a detailed explanation of all of the information used—a table of specialty premiums, risk factors for each specialty either from the premium data or insurer rating manuals, code crosswalks for new and revised CPT codes, and the budget-neutrality factor used by KPMG—with examples of the methodology used in calculating the malpractice RVUs. It also discusses special circumstances, such as the use of different risk factors for OB/GYN for surgical, nonsurgical, and delivery services, and the use of the surgical risk factor for cardiology for certain cardiac catheterization services even though the services are not in the surgery section of CPT. When combined with our 1999 specialty utilization data, it should be possible to reproduce KPMG's malpractice RVU calculations. This technical document can be found at Addendum G.

Comment: One commenter stated that we should explore the collection of non-M.D. and non-D.O. premium data (such as for podiatrists, chiropractors, and nurse practitioners) for future malpractice RVU updates.

Response: We will consider searching for such data for specialties such as podiatrists and chiropractors. We would not expect to collect such information for groups such as nurse practitioners since the law establishes their payments at 85 percent of the physician rate.

Comment: One commenter suggested that certain invasive electrophysiology codes, have the same relative risks as cardiac catheterization codes, and should be assigned a surgical risk factor similar to the risk factor assigned to cardiac catheterization codes.

Response: We agree, and have assigned a surgical risk factor to CPT codes 93600 through 93612, 93618 through 93641, and 93650 through 93652.

Comment: One commenter stated that since most OB/GYNs perform both obstetrics and gynecology, the higher obstetrics premium should be used for all services performed by OB/GYNs.

Response: We disagree. This comment was also addressed in the November 1999 final rule. To reiterate our response, it is true that a physician furnishing a wide range of services—

from low-risk visits to high-risk surgeries or deliveries—will probably pay a malpractice premium driven by the higher-risk procedures.

The purpose of the resource-based malpractice RVUs is not to guarantee each physician an absolute return of malpractice costs. It is rather to construct malpractice RVUs based on the relative malpractice costs among services. We believe that it is reasonable to use the lower risk factors for the values of the lower risk services and to allocate the higher relative values to the higher risk services that cause them. In the case of OB/GYN services, the higher obstetrical premiums were used for services that were clearly obstetrical and were causing the higher obstetrical premiums; the gynecological surgical risk factor was used for the surgical services, and the lower nonsurgical GYN risk factor was used for all other services. We would further note that even if we were to adopt the approach suggested by this comment, it would have very little, if any, impact on payment rates since OB/GYN specialties perform such a small proportion of the low risk visits provided to patients in the U.S.

Result of Evaluation of Comments

New malpractice RVUs based on the more recent 1996 through 1998 premium data will become effective on January 1, 2001. These malpractice RVUs will be considered interim for 2001 and subject to comment and possible revision in 2002. These malpractice RVUs can be found in Addendum B.

D. Critical Care Relative Value Units

Based on revisions to the definition of critical care services (CPT codes 99291 and 99292) in the CPT manual for CY 2001, we proposed to value the physician work at 4.0 RVUs for CPT code 99291 and 2.0 RVUs for CPT code 99292.

In addition, consistent with our discussion in the July 2000 proposed rule for electrical bioimpedance (EB), (see section H), we proposed not to allow separate Medicare payment for EB when it is furnished in conjunction with critical care services (CPT codes 99291 and 99292).

Comment: Commenters supported the revision to the physician work for these two codes. However, in the regulatory impact section of the July 2000 proposed rule (65 FR 44208), we stated that ''* * * any impact of this proposal would be incorporated in the physician fee budget neutrality calculations.'' Commenters believed it would be inappropriate to make a budget neutrality adjustment, since we made no adjustment last year. They argue that such an adjustment would skew payments.

Response: As indicated in the previous response, we are restoring the work RVUs for critical care to 4.0 for CPT code 99291 and 2.0 for CPT code 99292. The earlier reductions to the work RVUs were made assuming there would be a substitution of critical care for other services that would increase net payments if there were no reductions to the work RVUs. We believe this substitution will not occur because of additional revisions to the definition of critical care for 2001. Thus net payments would decrease if we do not restore critical care RVUs to their former levels.

Comment: One commenter urged that we reconsider including payment for EB services within the critical care codes, because they believed it would have a negative impact on its use in hospitals.

Response: The physician work required to perform this service involves reading and interpreting a series of numerical measurements. This is generally performed in conjunction with an evaluation and management service because the measurements produced by this procedure are difficult to interpret without a clinical evaluation of the patient. We continue to believe that it is appropriate to include payment for this service within the critical care service since the critical care service includes the review of EB tests. Other services such as the interpretation of cardiac output measurements (CPT 93561 and 93562) are currently included in the payment for critical care services, and we do not believe this has had an adverse impact on their performance in the hospital.

Result of Evaluation of Comments

We will finalize our proposal and value the physician work at 4.0 RVUs for CPT code 99291 and 2.0 RVUs for CPT code 99292. In addition, we will not allow separate Medicare payment for EB when provided in conjunction with critical care services (CPT codes 99291 and 99292).

E. Care Plan Oversight and Physician Certification and Recertification

In anticipation of CPT revisions to the definition of care plan oversight, we proposed establishing two new HCPCS codes for care plan oversight to be consistent with our payment policies. For the 2001 physician fee schedule, we proposed adding a new HCPCS code G0181 (care plan oversight, home health), using the CPT 2000 definition associated with CPT code 99375 and a new HCPCS code G0182 (care plan oversight, hospice) using the CPT 2000 definition associated with CPT code 99378. The definitions proposed for these new codes are:

G0181 Physician supervision of a patient under care of Medicare-covered home health agency (patient not present) requiring complex and multidisciplinary care modalities involving regular physician development and/or revision of care plans, review of laboratory and other studies, communication (including telephone calls) with other health care professionals involved with the patient's care, integration of new information into the treatment plan and/or adjustment of medical therapy, within a calendar month; 30 minutes or more.

G0182 Physician supervision of a patient under care of Medicare-covered hospice (patient not present) requiring complex and multidisciplinary care modalities involving regular physician development and/or revision of care plans, review of laboratory and other studies, communication (including telephone calls) with other health care professionals involved with the patient's care, integration of new information into the treatment plan and/or adjustment of medical therapy, within a calendar month; 30 minutes or more.

We also stated that current policy guidance that applied to CPT codes 99375 and 99378 will continue to apply to these G codes, and current payments for CPT codes 99375 and 99378 will be maintained in G0181 and G0182.

In addition, we proposed establishing two new HCPCS codes (G0180 and G0179) to describe the physician's services involved in physician certification (and recertification) of Medicare-covered home health services. These services include creation and review of a plan of care for a patient and verification that the home health agency initially complies with the physician's plan of care. The physician's work in reviewing data collected in the home health agency's patient assessment, including the Outcome and Assessment Information Set (OASIS) data, would be included in these services.

The proposed text for the new codes was as follows:

- G0180 (referred to as Gxxx3 in the proposal but renumbered in this final rule) Physician services for the initial certification of Medicare-covered home health services, for a patient's home health certification period, and
- G0179 (referred to as Gxxx4 in the proposal but renumbered in this final rule) Physician services for the

recertification of Medicare-covered home health services, for a patient's home health certification period.

Under the proposed rule, the use of these codes would have been restricted to physicians who are permitted to certify that home health services are required by a patient according to section 1814(a)(2)(C) and section 1835(a)(2)(A) of the Act.

Under the proposed rule, the physician certification for home health code (G0180), could be reported only once every 60 days, except in the rare situation when the patient starts a new episode before 60 days elapses and requires a new plan of care to start a new episode. For services within the episode (generally beyond the first week or two of care plan implementation) that are consistent with the definition of care plan oversight, the care plan oversight code (G0181) would be used.

Because we believed that the physician work associated with HCPCS code G0180 is equivalent to that of a level 3 established patient office visit (CPT code 99213), we proposed a value of 0.67 for the work RVUs. For G0179, we proposed a value of 0.45 work RVUs because we believe the work equates to a level 2 established patient office visit (CPT code 99212). For practice expense RVUs, we proposed to crosswalk both G0180 and G0179 to the practice expense inputs currently used for care plan oversight (CPT code 99375), since both the certification and recertification and care plan oversight codes do not require a face-to-face encounter between the beneficiary and the physician.

Care Plan Oversight

Comment: Several commenters objected to our proposal for G codes for care plan oversight services because the rationale presented in the July 2000 proposed rule (65 FR 44196) for the change was not clear. They stated that the public was not aware of specific definition changes proposed by the CPT panel, so they could not determine whether the new CPT definitions conflicted with Medicare policy. Thus, the commenters challenged the need for such a complicated change.

Response: We understand the concerns of the commenters but we were at that time unable to provide the full text of the revised CPT codes in the proposed rule. The CPT Committee had not yet released the definitions. The 2001 revised CPT code definitions for CPT codes 99375 and 99378 make a significant change. Specifically, the new definitions include the time the physician spends communicating with non-professional caretakers involved in delivering the home health or hospice services.

While we recognize that non-health professionals contribute to the care of both home health and hospice patients, our long-standing policy has been that payment for these services is included in the payment for evaluation and management services. As we indicated in the December 8, 1994 final rule (59 FR 63421) that originally established Medicare policies for care plan oversight services, we recognize for separate payment only the physician's communications to the health care professionals involved in the patient's care. The goal in care plan management is to be certain that the home health or hospice professional staff communicate with the patient's physician to allow the beneficiary to receive appropriate care. This continues to be the justification for an additional payment.

Comment: One organization requested clarification on whether nurse practitioners are able to bill for care plan oversight and physician certification and recertification services. They stated that the preamble discussion suggested only physicians may bill for these services. The commenter believed that under the provisions of the BBA, nurse practitioners practicing within the scope of State law are also permitted to perform these services.

Response: Under the provisions of the BBA, nurse practitioners, physician assistants and clinical nurse specialists, practicing within the scope of State law, can bill for care plan oversight services. These non-physician practitioners must have been providing ongoing care for the patient through evaluation and management (E/M) services (but not if they are involved only in the delivery of the Medicare-covered home health or hospice service). Sections 1814(a)(2)(C) and 1835(a)(2)(A) of the Act require that physicians certify and recertify the necessity of home health care in order for a particular beneficiary to receive covered services. Thus, without regard to payment issues, in order to be effective, a certification must be made by a physician. We agree with commenters that, according to section 1861(s)(2)(K) of the Act, nurse practitioners and others can perform and, where appropriate, bill for a service that is a physician service and within the scope of their practice. In adopting codes for certification and recertification of home health services and denominating them as billable physician services, we might be perceived as enabling these practitioners to bill those codes. However, nurse practitioners and others not specified under section 1861(r) of the Act cannot meet the requirements for certifying and recertifying home health services under sections 1814 and 1835 of the Act that independently require physician certification and recertification to establish the necessity of treatment.

Comment: Many commenters indicated they knew about the CPT panel's plans to change the code definition for 2001. They indicated that the CPT definition revision adding the reference to non-health professionals was merely to clarify that communication with these individuals is sometimes just as integral in providing good care. Some commenters also suggested that this was allowable when the codes were originally developed.

Response: We disagree with the commenters. When we originally established a separate payment for this service, we established a G code to describe the service. The CPT subsequently adopted the code. It was always our intent, as discussed above, to count the time spent with other health care professionals toward the 30-minute threshold. Although we agree that interactions with non-health care professionals are important to the overall care of patients, as explained in the previous response, such communication is included in the pre-visit and post-visit work of evaluation and management codes.

Comment: Many commenters expressed concern that adopting these G codes would complicate billing for care plan oversight services and exacerbate confusion surrounding these services, particularly since two sets of codes will exist for care plan oversight (CPT and HCPCS).

Response: Although we understand the commenter's concern, we feel the revised definitions for CPT codes 99375 and 99378 necessitate the establishment of temporary HCPCS codes G0181 and G0182. To assure consistency with current Medicare policy, we find it necessary to retain the current definitions of care plan oversight by the use of temporary HCPCS codes G0181 and G0182.

Certification and Recertification

Comment: Commenters generally supported the proposed new codes for certification and recertification, and some commenters emphasized that the codes will have a positive impact on patient care and also enhance the role of the physician in home care. However, some commenters were concerned that the CPT/RUC process was not used for the introduction of these codes, and

recommended that these codes be submitted to the CPT panel for establishment of codes.

Response: We wanted the home health certification and recertification codes to become active as soon as possible after the implementation of Medicare's new home health prospective payment system that was effective October 1, 2000. Requesting the CPT panel to adopt these codes was likely to delay their introduction. However, we will now ask the CPT panel to consider adopting these codes.

Comment: A few commenters expressed concern that the proposed values for the codes were provided with no explanation; thus, it was difficult to evaluate the proposal.

Response: To value these codes, we estimated the value of the work involved. We expect to re-evaluate these services once physicians become more familiar with the new home health payment system and use of this procedure code. In addition, if the CPT panel adopts the codes, we expect that the RUC would also review them.

Comment: A few commenters asked whether surgeons may bill for this service or whether the service is included in the surgeon's global fee. These commenters recommended that surgeons be allowed to bill outside the global surgery rules.

Response: Surgeons who refer patients for Medicare-covered home health care and who are certifying (or recertifying) the plan of care will be able to report codes G0179 and G0180.

Comment: We received comments that objected to our proposal to adjust the conversion factor to assure that physicians expenditures would not increase as a result of separate payment for this service. Some commenters stated that a budget-neutrality adjustment should not be performed because they believed these were new services that should appropriately increase physician expenditures.

Response: We address this comment in the impact section of this rule.

Comment: One commenter suggested we revise the definition of certification and delete reference to a ''patient who has not received Medicare-covered home health services for at least 60 days.'' There are scenarios when a patient may require a new initial certification but 60 days have not lapsed.

Response: Based on the opinions of our medical experts, we believe that creating a new plan of care is significantly more work than making even major modifications to a home health care plan. We plan to reconsider this issue once we have more experience with these codes.

Comment: Another commenter expressed concern about the ambiguity of codes for care plan oversight, certification, and recertification. The commenter also believed we needed to take a more comprehensive approach to informing physicians about the home health prospective payment system and new codes.

Response: We expect the discussion of these codes in this preamble to clarify their use. If additional questions remain, they can be addressed to our contractors who process Medicare bills. Our contractors will notify physicians about fee schedule changes for 2001.

Result of Evaluation of Comments

For care plan oversight, we are establishing the following two new codes as proposed:

- G0181 Physician supervision of a patient receiving Medicare-covered services from a participating home health agency (patient not present) requiring complex and multidisciplinary care modalities involving regular physician development and/or revision of care plans, review of subsequent reports of patient status, review of laboratory and other studies, communication (including telephone calls) with other health care professionals involved in patient's care, integration of new information into the medical treatment plan and/or adjustment of medical therapy, within a calendar month; 30 minutes or more, and
- G0182 Physician supervision of a patient receiving Medicare-covered services from a Medicare-participating hospice (patient not present) requiring complex and multidisciplinary care modalities involving regular physician development and/or revision of care plans, review of subsequent reports of patient status, review of laboratory and other studies, communication (including phone calls) with other health professionals involved in patient's care, integration of new information into the medical treatment plan and/or adjustment of medical therapy, within a calendar month; 30 minutes or more.

As stated in the proposed rule, current policy guidance that applied to CPT codes 99375 and 99378 will continue to apply to these G codes, and current payments for CPT codes 99375 and 99378 will be maintained in G0181 and G0182, respectively.

For the services involved in physician certification (and recertification) and the development of a plan of care for a patient for whom the physician has prescribed Medicare-covered home health services, we are establishing two new codes as proposed:

- G0180 Physician services for initial certification of Medicare-covered home health services, billable once for a patient's home health certification period. This code will be used when the patient has not received Medicare-covered home health services for at least 60 days.
- G0179 Physician services for recertification of Medicare-covered home health services, billable once for a patient's home health certification period. This code would be used after a patient has received services for at least 60 days (or one certification period) when the physician signs the certification after the initial certification period.

The G0179 code will be reported only once every 60 days, except in the rare situation when the patient starts a new episode before 60 days elapses and requires a new plan of care to start a new episode. For services within the episode that are consistent with the definition of care plan oversight, the care plan oversight code (G0181) would be used.

Consistent with section 1835(a)(2) of the Act, a physician who has a significant ownership interest in, or a significant financial or contractual relationship with a home health agency (HHA), generally cannot bill this code for patients served by that HHA.

We have retained the proposed relative values, for the reasons stated earlier. The physician work associated with HCPCS code G0180 will be valued at 0.67 and for G0179 the physician work will be valued at 0.45. We will use the practice expense inputs used for care plan oversight (G0181) for both codes.

F. Observation Care Codes

In the July 17, 2000 proposed rule (65 FR 44196) we indicated that allowing payment under the fee schedule for CPT codes 99234 through 99236, Observation or inpatient hospital care services (including the admission and discharge services) for a patient on the same date, conflicts with two policies currently in the Medicare Carrier Manual (MCM). Section 15505.1(c) in the MCM states that we only pay for a hospital admission when a patient is admitted as an inpatient and is discharged on the same day. Section 15504.b of the MCM states that CPT codes 99218 through 99220 (Initial Observation Care) should be used if the patient is discharged on the same day as the admission for observation only. Observation care discharge (CPT code

99217) may be used only on the second or subsequent days for observation care.

These policies also result in different payments for patients whose inpatient stay is less than 24 hours based solely on whether they were in the hospital at midnight. For example, a physician who admits a patient to observation or to inpatient care at 8 a.m. and then discharges the patient at 8 p.m. the same day is paid for only the admission service. On the other hand, a physician who admits a patient to observation or to inpatient care at 8 p.m. and then discharges the patient at 8 a.m. the next day, is allowed payment for both the admission and discharge services.

In response to these concerns, and to clarify our payment policy, we proposed the following:

Inpatient Stay of 24 Hours or More

We would pay for both inpatient hospital admission services (CPT codes 99221 through 99223) and hospital discharge services (CPT codes 99238 and 99239) when a patient is a hospital inpatient for a period of 24 hours or more. The medical record would have to document that the patient was an inpatient for at least 24 hours for both of these services to be paid.

Inpatient or Observation Stay of Less Than 8 Hours

If a patient is admitted as a hospital inpatient or an observation care patient for less than 8 hours, we will pay for only the admission service (CPT codes 99221 to 99223 or 99218 to 99220) on that day. The discharge service is not a separately billable service.

Inpatient or Observation Stay of 8 or More Hours, But Less Than 24 Hours

If a patient is admitted as a hospital inpatient or an observation care patient for a period of 8 or more hours, but less than 24 hours, we will pay for both the admission and discharge services under CPT codes 99234 through 99236 with the following proposed physician work RVUs and documentation requirements:

Physician Work RVUs

To properly value both the admission and discharge work of these services, we proposed to continue valuing the admission portion of the physician work as equivalent to CPT codes 99218 through 99220 (or CPT codes 99221 through 99223) and to reduce the discharge work RVUs from 1.28 to 0.67. Thus, the work RVUs would be as follows: CPT code 99234—1.95 RVUs; CPT code 99235—2.81 RVUs; CPT code 99236—3.66 RVUs. Our policy would allow payment for CPT codes 99234 through 99236 only for stays of equal to or greater than 8 hours, but less than 24 hours.

In addition to the documentation guidelines for history, physical examination, and medical decision making described in CPT 2000 for CPT codes 99234 through 99236, we proposed requiring the following to be documented in the medical record:

- A stay involving 8 hours, but less than 24 hours.
- The billing physician was present and personally performed the services.
- The admission and discharge notes were written by the billing physician.

Comment: A number of commenters disagreed with our proposal. They stated that we recently accepted the work values for CPT codes 99234 through 99236 and should not make changes now. They also stated that, instead of finalizing our proposal, we should change our payment policy in the MCM regarding payment for hospital admissions and discharges on the same day. Other commenters said that the proposed documentation requirements were onerous. These commenters said that the work value for discharging a patient on the same day as admission to the hospital or observation was the same as the work value for discharging a patient in the hospital for one or more days.

Response: We agree with the commenters that the work value for discharging a patient on the same day as admission is similar to the work value for discharging a patient on subsequent days.

We disagree with the commenters on the subject of documentation. We do not believe it is onerous to require a physician to document the length of time the patient remains in observation status. Minimal documentation, such as noting the hours in observation status, is required in the medical record to do this. There are other reasons to document the time a patient was seen and orders were written. For example, such documentation allows physicians and facilities to improve the quality of care they deliver. We also continue to believe that a recorded time requirement is necessary to assure that patients are truly being observed and treated for conditions that require ongoing care. Regarding payment for admission and discharge on the same day, we have long established policy that we will pay for only one E/M service per physician per patient per day for the same diagnosis, and we do not wish to revisit that policy.

Admission and discharge of a patient from observation or the hospital on the same calendar date should be billed as CPT code 99234 or 99235 or 99236. The hospital and observation admission/discharge codes should be used when a patient is admitted and discharged on different calendar dates.

In view of the foregoing explanation, our policy is as follows:

- The relative work values of CPT codes 99234 through 99236 will remain unchanged.
- For a physician to appropriately report CPT codes 99234 through 99236 for Medicare payment, the patient must be an inpatient or an observation care patient for a minimum of 8 hours on the same calendar date.
- When the patient is admitted to observation status for less than 8 hours on the same date, then CPT codes 99218 through 99220 should be used by the physician and no discharge code should be reported.
- When patients are admitted for observation care and then discharged on a different calendar date, the physician should use CPT codes 99218 through 99220 and CPT observation discharge code 99217.
- When patients are admitted to inpatient hospital care and then discharged on a different calendar date, the physician should use CPT codes 99221 through 99223 and CPT hospital discharge day management codes 99238 or 99239.
- For an inpatient admission and discharge less than 8 hours later on the same calendar date, CPT codes 99221 through 99223 should be used for the admission service, and the hospital discharge day management service should not be billed.
- The physician must satisfy the documentation requirements for both admission to and discharge from inpatient or observation care to bill CPT codes 99234, 99235, or 99236. The length of time for observation care or treatment status must also be documented.

We believe that this policy meets the concerns of the commenters and allows us to resolve the discrepancies in payment policy regarding same day hospital and observation care admission and discharge.

Result of Evaluation of Comments

The work RVUs for CPT codes 99234 through 99236 used for reporting admission for observation care, or inpatient hospital care and discharge on the same calendar date will not be changed. The policies outlined above must be followed when reporting these codes.

G. Ocular Photodynamic Therapy and Other Ophthalmological Treatments

Ocular photodynamic therapy (OPT) is a treatment recently approved by the Food and Drug Administration for age-related macular degeneration, the most common cause of blindness in the elderly. For CPT 2000, ocular photodynamic therapy was added to CPT code 67220, which was formerly limited to photocoagulation by laser. Because we believe that OPT is significantly different from laser photocoagulation, we proposed to establish new HCPCS codes that specifically identify these procedures as follows:

Gxxx5—''Destruction of localized lesion of choroid (*e.g.,* choroidal neovascularization); photocoagulation (*e.g.,* by laser), one or more sessions.'' We proposed using this code in place of CPT code 67220 and maintaining the work and malpractice RVUs and the CPEP inputs presently used for CPT code 67220 for payment of this new ''G'' code.

Gxxx6—''Destruction of localized lesion of choroid (*e.g.,* choroidal neovascularization); ocular photodynamic therapy (includes intravenous infusion).'' We proposed a value of 0.55 work RVUs and 0.52 RVUs for the malpractice component with a global period of ''XXX.''

We also proposed the following practice expense inputs for non-facility settings:

- *Clinical Staff Time.* Registered nurse/ophthalmology technician—40 minutes;
- *Supplies.* Ophthaine, mydriacil, myolfrin, gonisol, post myd spectacles, verteporfin and also infusion supplies including sterile and non-sterile gloves, butterfly needle, syringe, band aid, alcohol swab, staff gown, iv infusion set, and infusion pump cassette;
- *Equipment.* Laser, infusion pump, and exam lane. We noted that, while we proposed establishment of procedure codes for ocular photodynamic therapy, coverage of the procedure is at the discretion of the local carrier.

In instances where both eyes are treated the same day, we proposed the use of the following HCPCS add-on code: Gxxx7—''Destruction of localized lesion of choroid (*e.g.,* choroidal neovascularization); ocular photodynamic therapy (includes intravenous infusion) other eye.'' (List separately in addition to Gxxx6.) For this add-on code we proposed a ''ZZZ'' global period, with .28 work RVUs (half of that proposed for Gxxx6) and .52 malpractice RVUs (identical to that proposed for Gxxx6). The proposed practice expense inputs for services in the non-facility setting were as follows:

- Clinical Staff Time. Registered nurse/ophthalmology technician—5 minutes;
- Supplies. Ophthaine, mydriacil, myolfrin, and gonisol.

In addition, we identified several other specific ophthalmological treatments that are not distinctly identified in CPT 2000. We proposed to establish specific HCPCS codes for these procedures:

''Destruction of localized lesion of choroid (*e.g.,* choroidal neovascularization); transpupillary thermotherapy, one or more sessions'';

''Destruction of localized lesion of choroid (*e.g.,* choroidal neovascularization); photocoagulation, feeder vessel technique, one or more sessions''; and

''Destruction of macular drusen, photocoagulation, one or more sessions''.

We did not propose RVUs for HCPCS codes Gxxx8 through Gxx10 and indicated that the procedures represented experimental procedures and that the codes would be used for tracking purposes.

Since publication of the proposed rule, the AMA CPT editorial panel has approved a CPT code for Ocular Photodynamic Therapy, CPT code 67221, effective for CPT 2001, and removed the procedure as an example of a service included in CPT code 67220. In addition, verteporfin has been approved for inclusion in the United States Pharmacopeia and can now be billed separately as a drug under the Medicare program.

Comment: Several commenters requested that we withdraw our proposal to establish a G code for OPT in view of the establishment of a CPT code for this service. These commenters also recommended that we continue to recognize CPT code 67220 with its current RVUs.

Response: We agree with the commenters and are withdrawing our proposed G code for OPT. We will establish RVUs for CPT 67221 as described below. We will also continue to recognize CPT code 67220 and will maintain its current RVUs. We are removing verteporfin from the supplies included in practice expenses because the drug is now separately billable under Medicare.

Comment: We received comments in agreement with our proposal to establish an add-on G code for OPT performed on a second eye at the same sitting.

Response: We agree with the commenters and are finalizing this proposal. We will establish RVUs for this G code as described in a response found later in this section.

Comment: We received comments from physician groups agreeing with our proposal to establish three G codes for transpupillary thermotherapy (TTT), feeder vessel technique, and destruction of macular drusen. It was also pointed out that these services are not necessarily experimental, as we had stated in the proposed rule. All of these commenters said that coding these procedures as CPT 67220 was inappropriate because the work involved in performing these three procedures was substantially less than the work required for 67220. These commenters also agreed with our goal of tracking the utilization of these services and offered to assist us in developing national payment policy when appropriate. One commenter, representing a laser manufacturer, recommended continuing to allow TTT to be coded as 67220. Although this commenter stated that the work of TTT was similar to the work of 67220, no rationale was submitted for this comparison.

Response: We agree with the commenters who supported our proposal and are finalizing it. However, coverage and payment for these G codes will be at the discretion of each carrier. We want to thank the commenters offering to assist us in developing national payment policy at the appropriate time. We will review the frequency with which these procedures are performed on Medicare beneficiaries, and, when there is sufficient Medicare experience with this procedure, we will consider development of national payment policies for these services.

Comment: Several national ophthalmologic organizations submitted detailed information and recommendations regarding work RVUs, practice expense inputs, and malpractice RVUs for OPT.

Comment: Regarding work RVUs, the physician organizations submitted a joint recommendation of 5.08 work RVUs for this service based on a RUC survey and comparison of OPT to similar retinal procedures such as CPT codes 67141 and 67210 and the similar photodynamic procedure 43228 and 96570.

Response: Based on comments received from specialty societies and a comparison of the work values for this procedure with the work values for CPT code 67210 (Destruction of localized lesion of retina), we have assigned 4.01 work RVUs to this service. The intraservice times and work intensities

for CPT codes 67210 and 67221 are comparable. Therefore, adjusting for the work value of the postoperative visits (because CPT code 67210 has a 90-day global period) and the 20 percent retreatment rate included in CPT code 67210 and then applying the intraservice work intensity of CPT codes 67210 and 67221 yields an appropriate work value for CPT 67221. In addition, we are assigning a 0-day global period to this code, since this most accurately reflects the pre-, intra-, and post-service work and practice expense RVUs for this procedure.

Comment: Commenters agreed that the work value for performing OPT on a second eye at the same session as the first eye was 10 percent of the work value for the first eye. This was felt to be uniform for pre-, intra-, and post-service work.

Response: We agree with the commenters and are establishing a work RVU of 0.47 for G0184, the add-on code for the second eye. The global period for this code will be ZZZ as proposed.

Comment: Commenters agreed with our crosswalk of malpractice RVUs from CPT code 67220.

Response: We are finalizing our malpractice RVUs as proposed.

Comment: Commenters submitted a list of practice expense inputs for ocular photodynamic therapy.

Response: We agree with the practice expense inputs submitted by the commenters; however, we are adjusting the registered nurse time to eliminate a duplication in the counting of tasks reflected in their comments (reduction of two minutes) and have omitted the lens, which is reusable. A list of the direct inputs for practice expense is provided below under ''Result of Evaluation of Comments''.

Result of Evaluation of Comments

We will continue to recognize CPT code 67220 ''Destruction of localized lesion of choroids (*e.g.,* choroidal neovascularization); photocoagulation, one or more sessions, (*e.g.,* by laser)'' with its current RVUs. We are recognizing new CPT 67221 ''Destruction of localized lesion of choroids (*e.g.,* choroidal neovascularization); photodynamic therapy (includes intravenous infusion)'' for ocular photodynamic therapy and establishing a work RVU of 4.01, a malpractice RVU of 0.52 and using the following direct inputs for determining practice expense:

- *Clinical Staff Time.* Registered nurse—65 minutes; Certified ophthalmology technician—14 minutes;
- *Equipment.* Laser, infusion pump, exam chair and slit lamp; and,
- *Supplies.* Opthaine, mydriacyl, myolfrin, gonisol, infusion kit (includes all infusion supplies), gloves, drape, gown, band aid.

For G0184 ''Destruction of localized lesion of choroid (*e.g.,* choroidal neovascularization); ocular photodynamic therapy (includes intravenous infusion) other eye'' which is the add-on code for ocular photodynamic therapy of the second eye, we are establishing a work RVU 0.47 and a malpractice RVU of 0.52. The following direct inputs will be used for calculating practice expense:

- *Supplies.* Opthaine, mydriacyl, myolfrin, and gonisol.

In addition, we are establishing the following HCPCS codes for other ophthalmologic procedures:

G0185 for ''Destruction of localized lesion of choroid (*e.g.,* choroidal neovascularization); transpupillary thermotherapy, one or more sessions''; G0186 for ''Destruction of localized lesion of choroid (*e.g.,* choroidal neovascularization); photocoagulation, feeder vessel technique, one or more sessions''; and G0187 for ''Destruction of macular drusen, photocoagulation, one or more sessions''. Coverage and payment for these G codes will be at the discretion of each carrier.

H. Electrical Bioimpedance

Electrical bioimpedance (EB), a noninvasive method of measuring cardiac input, is a covered procedure under Medicare, if medically necessary. Performance of this procedure is reported by the Level 2 HCPCS code M0302, and the procedure is currently carrier-priced. In the July 17, 2000 rule, we proposed the following RVUs for this procedure:

1. Practice Expense

We proposed the following direct inputs for determining practice expense RVUs.

- *Clinical staff time.* Registered nurse—15 minutes.
- *Supplies.* Four disposable sensors, patient gown, exam table paper, and pillowcase.
- *Equipment.* Cardiac output monitor and exam table.

2. Malpractice

We proposed 0.02 RVUs for this procedure.

3. Physician Work

We stated that with respect to RVUs for physician work, we had insufficient information to propose a work value and invited comments on this subject.

We also proposed that the payment for this procedure be included in reporting critical care. Therefore, separate payment would not be made for this procedure when provided in conjunction with critical care services (CPT codes 99291 and 99292).

Comment: There was general agreement with the proposed direct practice expense inputs. Commenters agreed that, although the amount of time for the procedure can vary, the typical time is 15 minutes. They noted that the price for the sensors per treatment was higher than the type of sensors used in an EKG. Commenters also indicated that the average cost of the bioimpedance monitor was $27,000 (we had priced the equipment at $22,790). A specialty group provided direct practice data obtained from a survey they had conducted. The data reflected similar supplies as proposed, with the addition of alcohol swabs and also stated the price of the equipment was $26,225. These data also reflected a clinical staff (registered nurse) time of 29 minutes.

Response: For the practice expense inputs, we are adjusting the cost used for the bioimpedance monitor (increasing the proposed amount $22,790 to $25,700). In addition, the alcohol swabs will be added to the supplies. The specific price allocated to the disposable sensors was $9.95 which was comparable to the $9 to $10 range reflected in the comments received; therefore, no change is being made to the price of the sensors. We are making no adjustment to the clinical staff time because, based on further discussions and observation of the service being performed, we believe 15 minutes of registered nurse time is reasonable.

Comment: While some commenters agreed with the proposed value of .02 for malpractice, a few commenters indicated that the proposed value of .02 for malpractice was slightly low. They recommended a value of .06 that is the malpractice RVU for CPT code 93720 (plethysmography).

Response: We will finalize our proposal of .02 RVUs for the malpractice component of this service because we continue to believe it is most similar to the malpractice component for an EKG.

Comment: Commenters recommended work values ranging from 0 work RVUs to work RVUs similar to EKG Interpretation (CPT code 93010), Total Body Plethysmography (CPT code 93720), Exercise Tolerance Test (CPT code 93018), Cardiac Output Measurement by thermodilution (CPT code 93561) and Echocardiography (CPT code 93320).

Response: The physician work required for performance of this service involves reading and interpreting a series of numerical measurements. This

is generally done in conjunction with an evaluation and management service because the measurements produced by this procedure are difficult to interpret without a clinical evaluation of the patient. To determine what, if any, work RVUs to establish for this procedure, we identified physician work that would be attributed to this procedure and would not be billed as part of an evaluation and management service.

The fact that the information gained from a test is used in making treatment decisions is irrelevant to the issue of determining physician work (for example, results of urinalyses, complete blood counts (CBCs) are used to make clinical decisions, but these tests do not contain a physician work component). For example, it is possible to make an electrocardigraphic diagnosis (for example, left ventricular hypertrophy, acute Myocardial Infarction, Heart Block) through analysis of the waveforms on an EKG without a clinical evaluation of the patient. This separately identifiable work is what justifies establishment of work RVUs for interpretation of EKGs. It is not as easy to identify separately identifiable work in the case of cardiac bioimpedance. The measurements produced by cardiac bioimpedance include blood pressure, pulse, cardiac output, vascular resistance and thoracic fluid content. Generally, abnormalities in any of these do not allow a diagnosis to be made (for example, hypertension or heart failure). These measurements are used to provide additional information to a physician who is clinically evaluating a patient, in much the same way that results of a CBC and urinalysis are used. However, after reviewing the comments, we currently believe there is a small amount of physician work in interpreting the measurements produced by cardiac bioimpedance that is not billable as part of an E/M service. For example, if a physician reviews, interprets, and issues a report, then separate work can be identified.

We believe that this physician work is most similar to the work of interpreting an EKG and have assigned a work RVU of .17 for the professional component of cardiac bioimpedance. We wish to emphasize that in order for the PC to be billed, all the requirements for billing a diagnostic test must be satisfied. We will also bundle the PC into critical care when critical care services are furnished, since the critical care service includes the review of such tests. Furthermore, we will allow this service to be billed once per physician, per patient, per day.

Result of Evaluation of Comments

For HCPCS code M0302, we are establishing a work RVU of .17, a malpractice value of .02 and are using the following inputs for PE

- *Clinical Staff Time.* Registered nurse—15 minutes.
- *Supplies.* Four disposable sensors, patient gown, exam table paper, pillowcase, and four alcohol swabs.
- *Equipment.* Cardiac output monitor and exam table (using a price of $25,700 for the monitor).

We note that there is a TC and a PC for this service. The direct practice expense inputs listed above will be part of the TC.

I. Global Period for Insertion, Removal, and Replacement of Pacemakers and Cardioverter Defibrillators

We proposed to change the global period for the insertion, removal, and replacement of pacemakers and cardioverter defibrillators (CPT codes 33206, 33207, 33208, 33212, 33213, 33214, 33216, 33217, 33218, 33220, 33233, 33234, 33235, 33240, 33241, 33244, 33249, 33282, and 33284) to 0 days. This would permit separate payment for any care furnished during the post-operative period by the physician who performed the pacemaker or cardioverter defibrillator procedure. We also proposed an adjustment to the physician work RVUs and practice expense inputs to reflect the change in global period for these codes.

Comment: Several physician organizations recommended withdrawal of this proposal. They commented that the proposed reduction in work and payment for these codes was too drastic and was inappropriate since most of the work in these procedures was intraservice work. They also stated that physicians who insert pacemakers and cardioverter defibrillators generally do not see their patients postoperatively and do not render any postoperative care for related conditions.

Response: We are deferring this proposal because of the concerns raised about the adjustment to the work RVU under our proposed policy. Nonetheless, we believe that some commenters have raised points that, if accurate, suggest that a 0-day global period and adjustment to the work RVU is appropriate. We proposed this policy because of our concern that cardiologists are providing post-operative services during the 90-day global period, as well as evaluation and management services to treat underlying heart conditions that are unrelated to the insertion, removal and replacement of a pacemaker or cardioverter defibrillator.

Our proposed policy was intended to facilitate separate payment for the evaluation and management services unrelated to the surgical service. Our concern was that the 90-day global period was precluding separate payment for the evaluation and management services. However, we received comments that indicated that cardiologists do not typically provide the post-operative services related to surgical service. If this is the case, we believe that a 0-day global period is appropriate for these procedures. Moreover, if the comment is accurate, the current (not the proposed) work and practice expense RVUs are likely overstated because these values are based on one physician providing both the surgical and post-operative services. In general, we believe that the refinement process is useful for revaluing services when the nature of the service has changed from its previous valuation. If the commenters are correct, the issue of the global period and appropriate relative value units for these services will need further review. We look forward to working with the physician community to better understand the typical practice with regard to the provision of services related to insertion, removal and replacement of pacemakers and cardioverter defibrillators. We welcome any review of this issue that may be undertaken by the RUC as part of their recommendation related to the 5-year review of work and the PEAC on issues related to practice expense.

Nevertheless, we are not finalizing our proposal with respect to this issue because we believe that physicians have raised valid concerns that the adjustment to the work RVU in the proposal may result in an underpayment for the service. Until there is further review of this issue, we are continuing with current pricing for these services and the use of a 90-day global period.

Result of Evaluation of Comments

No change will be made to the global period for CPT codes 33206, 33207, 33208, 33212, 33213, 33214, 33216, 33217, 33218, 33220, 33233, 33234, 33235, 33240, 33241, 33244, 33249, 33282, and 33284 in this rule.

J. Antigen Supply

In the July 2000 rule we proposed amending § 410.68(b), Antigens: Scope and conditions, to change the limitation of antigen supply from 12-weeks to 12-months to be more reflective of current industry standards and guidelines.

Comments: The majority of commenters, including national and State specialty associations, supported this change and indicated that it was not only reflective of current industry standards but would improve patient care and benefit patients and practitioners alike. However, a few commenters did not agree with this revision, and felt that stability of the extracts over time is still questionable. They recommended that the 12-weeks limitation be maintained, or that it be changed to no more than 6 months.

Response: We continue to believe that revising the regulation is appropriate, so that it is reflective of current industry standards. To the extent that the 12-month time period is inappropriate for specific antigens, it is a physician's responsibility to assure that the clinical potency of the antigen is preserved by furnishing a supply of antigens for a shorter time frame. The revision to the regulation simply allows a physician to furnish a 12-month supply of antigens when the physician believes it is appropriate, based on the specific antigens involved.

Result of Evaluation of Comments

We are revising the regulation at § 410.68(b) as proposed.

K. Low Intensity Ultrasound

We proposed to remove the RVUs that were assigned to CPT code 20979, low intensity ultrasound stimulation to aid bone healing. We made this proposal because of concerns raised by commenters, and because the service was a noncovered service under Medicare.

Comment: One specialty organization pointed out that on July 31, 2000, subsequent to publication of the proposed rule, a HCFA National Coverage Decision Memorandum was issued stating that ultrasound stimulation for the treatment of established nonunions is now covered under Medicare.

Response: As pointed out by the commenter, since publication of our proposed rule on July 17, 2000, a National Coverage Decision has been made that states that low intensity ultrasound will be covered by Medicare as a treatment modality for nonunion of extremity fractures. This restricted coverage takes effect on April 1, 2001. Therefore, this service will be noncovered until that time. Although low intensity ultrasound was approved under the durable medical equipment benefit, a single training session for the patient in the use of the device is required. This session is generally provided by a physician, or under the direction of a physician, and is appropriately reported as CPT code 20979, ''Low intensity ultrasound stimulation to aid bone healing, noninvasive (nonoperative)''. This service is comparable to the service provided under CPT code 20974 ''Electrical bone stimulation to aid bone healing; noninvasive (nonoperative)''. Both are training sessions provided to a patient once per course of treatment by a physician or under a physician's direction. Based on this, and in light of concerns raised on the interim RVUs contained in last year's final rule, we will crosswalk the work RVUs and the malpractice RVUs for CPT code 20974 to CPT code 20979. We will use the following direct inputs for determining practice expense:

- *Clinical Staff Time.* Technician—45 minutes.
- *Equipment.* Exam table.
- *Supplies.* Minimum visit package.

In addition, we are assigning a global period of ''XXX''. However, we expect that CPT code 20979 will be billed only once per treatment period, and we will require the use of the -25 modifier with any E/M service billed by a physician for the same patient on the same day as CPT code 20979. Therefore, any E/M service billed in addition to CPT code 20979 must be distinct and separately identifiable.

Comment: One commenter agreed with our proposed elimination of RVUs for this code, and requested that we eliminate all RVUs for status N codes (that is, codes that are non-covered by Medicare). The commenter felt that the RVUs associated with status N codes may contain overvalued misrepresentations and that since non-governmental insurers use the Medicare Fee Schedule as a basis for payment, use of RVUs for status N codes grossly misrepresents equitable payment for these types of services.

Response: As noted in the response above, based on the National Coverage Decision Memorandum, we are retaining the RVUs for CPT code 20979 in the Medicare fee schedule. We will further review issues related to publishing RVUs for non-covered services and may address it in future rulemaking.

Result of Evaluation of Comments

We are assigning .62 work RVUs and .04 malpractice RVUs to CPT code 20979 (which are the values also used for CPT code 20974) and the direct inputs of: technician time of 45 min., an exam table, and minimum supply package will be used to determine practice expense. We note that the inputs for practice expense are subject to refinement.

L. Implantation of Ventricular Assist Devices

In the July 2000 rule, we proposed to revise the practice expense RVUs associated with the CPT codes 33975 and 33976 (implantation of ventricular assist devices) to reflect an ''XXX'' global period. The purpose of this revision was to ensure that the practice expense RVUs reflect the global period change published in the April 11, 2000 correction notice (65 FR 19332) to the November 1999 final rule. No comments were received on this proposal and we are finalizing it as proposed.

III. Other Issues

A. Incomplete Medical Direction

We currently do not have a national policy that instructs carriers on the method of payment for a service when the anesthesiologist does not fulfill all the medical direction requirements. One option carriers may use is instructing the anesthesiologist to report this service as a reduced or unusual service to determine appropriate payment. We did not make a specific proposal, but indicated that we would like to clarify this policy. We outlined possible options in the July 2000 proposed rule that could be alternatives for future rulemaking consideration. We requested comments, particularly from physicians and practitioners most affected by this policy.

We received comments from both of the major anesthesia groups, the American Society of Anesthesiologists and the American Association of Nurse Anesthetists, as well as a few state anesthesiology groups and practicing anesthesiologists. We will review these suggestions as we determine whether to make a future proposal.

B. Payment for Pulse Oximetry Services

In the July 2000 proposed rule, we clarified that we will continue to pay separately for certain diagnostic codes, including pulse oximetry (CPT codes 94760 and 94761), when they are medically necessary and there are no other services payable under the physician fee schedule billed on the same date by the same supplier.

Comment: Commenters were appreciative of the policy clarification; however, they continue to believe that we should allow separate payment for this service when provided in conjunction with other services, particularly after years of paying separately for this service. Under current policy, physicians are unable to

receive payment for the practice expense associated with the service if it is provided on the same day as another service (for example, E/M). Commenters continue to believe that there is additional identifiable work involved that should be paid by Medicare. One commenter stated that this activity is not included in an E/M vignette, and thus, it should not be bundled into an E/M service.

Response: As explained in last year's final rule, we believe pulse oximetry is no more resource intensive, and arguably less so, than recording the patient's temperature, another example of a diagnostic service for which we do not make separate payment. Because this technology has progressed and been simplified and reduced in cost, pulse oximetry is a routine, minor part of a procedure or visit. We will continue to bundle payment for CPT codes 94760 and 94761 when they are provided the same day as other services. The interpretation of pulse oximetry is part of the medical decision making included in the E/M service. The medical decision making process involves the physician's assessment and treatment plan unique to the individual patient. CPT vignettes are examples and do not necessarily include every potential activity which may occur in the medical decision making process.

Comment: One commenter pointed out that we require an arterial blood gas (ABG) or pulse oximetry for patients requiring oxygen, and that an ABG is a more expensive service than pulse oximetry, and also can be more burdensome to the patient. Therefore, we should continue to reimburse for this service.

Response: As previously explained, we will make separate payment for pulse oximetry services (CPT codes 94760 and 94761) when it is medically necessary and there are no other services payable under the physician fee schedule billed on the same day by the same supplier.

Result of Evaluation of Comments

We will continue with the policy of bundling payment for pulse oximetry (CPT codes 94760 and 94761) when it is provided on the same day as another service. Separate payment for these codes may be made only when the services are medically necessary and there are no other services payable under the physician fee schedule billed on the same date by the same supplier.

C. Outpatient Therapy Supervision

In the July 2000 proposed rule, we clarified that therapy assistants must be personally supervised by the therapist in private practice and employed directly by the therapist, by the partnership or group to which the therapist belongs. We did not make a proposal, and the discussion was provided for informational purposes only. We felt that this explanation was necessary, since revisions in the November 1998 final rule (63 FR 58814) had prompted confusion in the therapy industry. They believed that we had misinterpreted the supervision requirement or had established a new requirement for therapy assistants in the private practice setting. We wanted to clarify that the requirements for therapy assistants in a private practice setting had not changed from the longstanding requirements established in Medicare Carriers Manual (MCM) instructions (see section 2215F, HCFA Pub. 6) revised in 1981.

Comment: Two therapy associations asserted that we have established a new supervision requirement for therapy assistants in the private setting. They base their assertion upon an analysis of the legislative and regulatory history pertaining to supervision of therapy assistants in a private practice setting. According to the associations, we should state in this rule that direct supervision, rather than personal supervision, is required for therapy assistants in the private practice setting. In addition, they requested this statement because Medicare carriers are now examining claims prior to 1999, and seeking money from therapists for services furnished without the therapist being ''in the room'' with the therapy assistant.

Response: In light of the comments received, we are carefully examining this issue. We did not propose any change in the supervision requirement for therapy assistants in the private setting in the final rule published November 2, 1998 (63 FR 58860). Any change in the level of supervision would need to be addressed in a future proposed rule.

Comment: Two medical associations requested clarification as to whether a physical therapist could bill for services without ever providing or supervising the performance of that service. In addition, clarifications were requested about the application of the physical therapy supervision policy and the ''incident to'' rules applicable to the physician services benefit.

Response: First, we note that the physical therapy supervision policy only relates to the therapist in the private practice setting. A therapist cannot bill for services that he or she has not either personally performed or supervised the performance of the service. Moreover, there is no ''incident to'' provision in the physical therapy benefit, unlike the physician services benefit. However, a physician may employ a therapist, and the services of the therapist may be billed as ''incident to'' the physician's services if all the requirements of section 2050 through 2050.1 of the MCM are met.

Comment: A revision in section 2050.2 of the MCM is urged by a psychiatric association to allow physicians who own a practice to be off the premises when other legally authorized practitioners, for example, psychologists and clinical social workers are present. An analogy to physical therapists in private practice was provided.

Response: The regulatory change that allowed physical therapists in private practice to be off the premises when other qualified therapists are present resulted from Congressional statements in both the House and Senate committee reports associated with our fiscal year 1997 appropriations process. To address the concerns expressed in these reports, we revised the regulations at §§ 410.59(c)(2) and 410.60(c)(2). With respect to the commenters reference to section 2050 of the MCM, this section discusses services and supplies furnished ''incident to'' a physician's professional services. As stated in section 2050.2 of the MCM, in order for the services of a nonphysician practitioner to be covered as incident to the services of the physician, the services must meet all the requirements for coverage specified in sections 2050 through 2050.1. There is no analogy between physicians and therapists in this circumstance, because there is no similar benefit covering services and supplies provided incident to a therapist's professional services. We have, therefore, no plans to revise section 2050.2 of the MCM. We would also note that some practitioners, such as clinical psychologists and clinical social workers, have a statutory benefit under Medicare, and may provide and bill for services without supervision of a psychiatrist.

D. Outpatient Therapy Caps

Section 221 of the BBRA placed a 2-year moratorium on Medicare Part B outpatient therapy caps (the $1500 cap on outpatient physical therapy services including speech language-pathology services and the $1500 cap on outpatient occupational therapy services in all nonhospital settings). The two $1500 caps were implemented in 1999 as required by the BBA.

The BBRA also requires us to submit to the Congress a report by January 1,

2001 that includes recommendations on—(1) the establishment of a mechanism for assuring appropriate utilization of outpatient therapy services; (2) the establishment of an alternative payment policy for outpatient therapy services based on classifications of individuals by diagnostic category, functional status, prior use of services (in both inpatient and outpatient settings), and other criteria, in place of uniform dollar limitations, and (3) how to do this in a budget-neutral manner.

In the July 17, 2000 rule, we provided examples of informal recommendations we have received on this issue, and asked for comments from the public on other alternatives that we might consider in developing a payment policy for outpatient therapy services. We indicated that this information would be considered in preparing our report to Congress on outpatient therapy services.

Result of Evaluation of Comments

Several organizations commented on the issue of outpatient therapy caps. Some groups responded to the examples provided in the proposed rule, while others offered other alternatives. We appreciate the information provided and will consider it as we develop the report to Congress.

E. HCPCS G Codes

Several commenters recommended that, instead of creating G codes, we work more closely with the AMA CPT Editorial Panel to establish or revise CPT codes to meet our requirements.

We have a long-established working relationship with the AMA CPT Editorial Panel. We prefer the use of CPT codes to the use of G codes for reporting physicians' services. In fact, this year, we initiated the establishment of a new CPT code that describes ocular photodynamic therapy (67221) for CPT 2001, and the revision of an old CPT code (67220) to remove ocular photodynamic therapy. We did this proactively to avoid the need to establish a G code. We, along with the ophthalmology societies, brought these recommendations to the CPT Editorial Panel. Thus we were able to withdraw our proposal for a G code for ocular photodynamic therapy. We also worked with the panel to establish CPT codes for artificial skin placement and wound care management that will enable to us to retire our G codes for these services.

We believe that sometimes HCPCS level 2 codes are useful to the CPT Editorial Panel process. For example, use of a new service can be tracked with the G codes to determine if a future CPT code is appropriate.

Frequently, we create G codes to reflect our own coverage and payment requirements. These requirements are usually very specific, and may make it inappropriate to create a CPT code for general use.

Moreover, in response to requests from physicians and others, we make coverage decisions on a rolling basis. Because the CPT process requires at least 1 year between approval and implementation of a CPT code, we must create a G code during the interim. We occasionally have specific coverage and payment requirements according to which Medicare payment is not made for a specific CPT code. This was the case with the revision of the care plan oversight codes. We specifically informed the CPT Editorial Panel before the codes were revised that the proposed revisions would be inconsistent with our established payment policy, and, therefore, we would need to create G codes for care plan oversight and not use the revised CPT codes. Similarly, we are finalizing our proposal to create G codes for several ophthalmologic procedures to track the use of these services and permit coverage and payment on a carrier-by-carrier basis. We had comments from the appropriate medical specialty societies, and determined that it was not appropriate to create CPT codes for these services at present. The specialty societies supported our creation of the G codes; this mechanism permits payment for these services while establishing a way to track their use. In the case of physician certification and recertification of a plan of care for home health services, we created two new G codes because of our interest in providing explicit payment for these services as a result of development of the home health prospective payment system (PPS). As we indicated in the home health PPS rule (65 FR 41163), we have decided to ''focus our attention on physician certification efforts and education in order to better involve the physician in the delivery of home health services.'' While we are imposing no new regulatory requirements on physicians related to these services, we felt that it was important to establish these two new codes quickly to allow separate payment for these services as soon as possible after implementation of the home health PPS on October 1, 2000.

Use of G codes is also consistent with section 1848(c)(5) of the Act, which specifically provides us with the authority to establish a uniform procedure coding system for the coding of all physicians' services.

In summary, we support the use of CPT codes. We establish G codes only when absolutely necessary. We would like to assure the medical community that we will continue work with the AMA CPT Editorial Panel to minimize the need for G codes. However, we have the responsibility for developing and implementing payment policy for the Medicare program. On occasion, we need to establish G codes to appropriately administer the Medicare program.

F. Work RVUs in Proposed Rule

Comment: A few commenters stated that work RVUs for some services were incorrect due to the incorrect placement of the decimal in Addendum B of the July 2000 proposed rule (65 FR 44210). They requested that we correct them in the final rule.

Response: Due to a programming error, some services were assigned incorrect work RVUs in Addendum B of the proposed rule. We have taken steps to ensure that this programming error is corrected.

G. Five-Year Refinement of Relative Value Units

In the July 17, 2000 proposed rule (65 FR 44201), we included a discussion on the activities underway with respect to the second five-year refinement of work RVUs. We indicated that we had received comments on potentially misvalued services from approximately 30 specialty groups, organizations and individuals, involving over 900 codes. We shared these comments with the RUC, which makes recommendations to us on the assignment of RVUs to new and revised CPT codes. We also discussed current initiatives involving the validation of physician time data.

Comment: Commenters expressed concern about the discussion on five-year review activities. They were unsure as to how the contractor activities outlined in the proposed rule would be coordinated with the RUC recommendations on work RVUs that will be forwarded to us for consideration. Commenters also expressed concern that contractor activities are primarily focused on physician time. They cautioned that other factors need to be considered in conjunction with time (for example, stress, physician effort, and technical effort) when valuing physician work.

Response: We discussed the data obtained by our contractors with the RUC. We also discussed with the RUC and the physician community the best

use of the data obtained by our contractors.

Comment: One organization stated that, during the initial five-year review, budget neutrality was achieved by applying an 8.3 percent reduction to all physician work RVUs. They strongly encouraged us to distribute any impact across all specialties and all CPT codes for the current 5-year review.

Response: Based on our prior experience, we acknowledge that there has been significant interest in how we make adjustments to achieve budget neutrality as a result of work refinement. We will discuss potential options and propose an adjustment to ensure budget neutrality resulting from the work RVU refinement in next year's proposed rule.

Comment: One commenter asked when the Health Economics Research (HER) study data discussed in the proposed rule would be available.

Response: We anticipate that the study data will be available by December 1, 2000. We will be posting this information on our homepage. (Access to the homepage is discussed in the introductory section of this rule under **SUPPLEMENTARY INFORMATION.**)

IV. Refinement of Relative Value Units for Calendar Year 2001 and Responses to Public Comments on Interim Relative Value Units for 2000 (Including the Interim Relative Value Units Contained in the July 17, 2000 Proposed Rule)

A. Summary of Issues Discussed Related to the Adjustment of Relative Value Units

Section IV.B. of this final rule describes the methodology used to review the comments received on the RVUs for physician work and the process used to establish RVUs for new and revised CPT codes. Changes to codes on the physician fee schedule reflected in Addendum B are effective for services furnished beginning January 1, 2001.

B. Process for Establishing Work Relative Value Units for the 2001 Fee Schedule and Clarification of CPT Definitions

Our November 2, 1999 final rule on the 2000 physician fee schedule (64 FR 59380) announced the final work RVUs for Medicare payment for existing procedure codes under the physician fee schedule and interim RVUs for new and revised codes. The RVUs contained in the rule apply to physician services furnished beginning January 1, 2000. We announced that we considered the RVUs for the interim codes to be subject to public comment under the annual refinement process. In this section, we summarize the refinements to the interim work RVUs that have occurred since publication of the November 1999 final rule and our establishment of the work RVUs for new and revised codes for the 2001 fee schedule.

Work Relative Value Unit Refinements of Interim and Related Relative Value Units

1. Methodology (Includes Table titled Work Relative Value Unit Refinements of the 2000 Interim and Related Relative Value Units)

Although the RVUs in the November 1999 final rule were used to calculate 2000 payment amounts, we considered the RVUs for the new or revised codes to be interim. We accepted comments for a period of 60 days. We received substantive comments from approximately 11 specialty societies on approximately 29 CPT codes with interim work RVUs. Only comments on codes listed in Addendum C of the November 1999 final rule were considered.

We used a process similar to the process used in 1997. (See the October 31, 1997 final rule on the physician fee schedule (62 FR 59084) for the discussion of refinement of CPT codes with interim work RVUs.) We convened a multispecialty panel of physicians to assist us in the review of the comments. The comments that we did not submit to panel review are discussed at the end of this section, as well as those that were reviewed by the panel. We invited one representative from each of those specialty societies from which substantive comments were received to attend a panel for discussion of the codes on which they had commented. The panel was moderated by our medical staff, and consisted of the following representatives.

Voting Members

- One or two clinicians representing the commenting specialty(s), based upon our determination of those specialties which are most identified with the service(s) in question. Although commenting specialties were welcomed to observe the entire refinement process, they were *only* involved in the discussion of those services for which they were invited to participate.
- Two Primary care clinicians nominated by the American Academy of Family Physicians and the American Society of Internal Medicine.
- Five Carrier medical directors.
- Four clinicians with practices in related specialties, who were expected to have knowledge of the services under review.

The panel discussed the work involved in each procedure under review in comparison to the work associated with other services on the fee schedule. We had assembled a set of reference services, and asked the panel members to compare the clinical aspects of the work of services they believed were incorrectly valued to one or more of the reference services. In compiling the set, we attempted to include—(1) services that are commonly performed whose work RVUs are not controversial; (2) services that span the entire spectrum from the easiest to the most difficult; and (3) at least three services performed by each of the major specialties so that each specialty would be represented. The set listed approximately 300 services. Group members were encouraged to make comparisons to reference services. The intent of the panel process was to capture each participant's independent judgement based on the discussion and his or her clinical experience. Following each discussion, each participant rated the work for the procedure. Ratings were individual and confidential, and there was no attempt to achieve consensus among the panel members.

We then analyzed the ratings based on a presumption that the interim RVUs were correct. To overcome this presumption, the inaccuracy of the interim RVUs had to be apparent to the broad range of physicians participating in each panel.

Ratings of work were analyzed for consistency among the groups represented on each panel. In general terms, we used statistical tests to determine whether there was enough agreement among the groups of the panel, and whether the agreed-upon RVUs were significantly different from the interim RVUs published in Addendum C of the November 1999 final rule. We did not modify the RVUs unless there was a clear indication for a change. If there was agreement across groups for change, but the groups did not agree on what the new RVUs should be, we eliminated the outlier group, and looked for agreement among the remaining groups as the basis for new RVUs. We used the same methodology in analyzing the ratings that we first used in the refinement process for the 1993 fee schedule. The statistical tests were described in detail in the November 25, 1992 final rule (57 FR 55938).

Our decision to convene multispecialty panels of physicians and to apply the statistical tests described above was based on our need to balance

the interests of those who commented on the work RVUs against the redistributive effects that would occur in other specialties. Of the 11 codes reviewed by the multispecialty panel, all were the subject of requests for increased values. Of the 11 interim work RVUs that were reviewed, 9 were increased and 2 were unchanged.

We also received comments on RVUs that were interim for 2000, but which we did not submit to the panel for review for a variety of reasons. These comments and our decisions on those comments are discussed in further detail below.

The table below lists the interim and related codes reviewed during the refinement process described in this section. This table includes the following information:

- CPT Code. This is the CPT code for a service.
- Description. This is an abbreviated version of the narrative description of the code.
- 2000 Work RVU. The work RVUs that appeared in the November 1999 rule are shown for each reviewed code.
- Requested Work RVU. This column identifies the work RVUs requested by commenters.
- 2001 Work RVU. This column contains the final RVUs for physician work.

REFINEMENT OF 2000 INTERIM WORK RELATIVE VALUE UNITS

CPT code	Description	2000 work RVU	Requested work RVU	2001 work RVU
27096	Inject sacroiliac joint	1.10	1.40	1.40
61862	Implant neurostimul, subcort	19.34	27.34	19.34
61885	Implant neurostim one array	5.85	8.00	5.85
62263	Lysis epidural adhesions	6.02	7.20	6.14
72275	Epidurography	0.54	0.83	0.76
73542	X-ray exam, sacroiliac joint	0.54	0.64	0.59
76873	Echograp trans r, pros study	0.99	1.92	1.55
93741	Analyze ht pace device sngl	0.64	0.90	0.80
93742	Analyze ht pace device sngl	0.73	1.03	0.91
93743	Analyze ht pace device dual	0.83	1.17	1.03
93744	Analyze ht pace device dual	0.95	1.33	1.18

*All CPT codes and descriptions copyright 2000 American Medical Association.

2. Interim 2000 Codes.

CPT code 11980 Subcutaneous hormone pellet implantation.

We did not receive a work RVU recommendation from the RUC for this code, and therefore crosswalked it to CPT 11980 for the 2000 fee schedule. One commenter indicated that a recommendation for work RVUs would be included in the RUC recommendations for 2001, and urged that we accept this RVU recommendation.

Final decision: The 2001 RUC recommendation for CPT Code 11980 has been reviewed and accepted.

CPT Code 27096 Injection Procedure for Sacroiliac Joint Arthrography and/or Aesthetic Steroid

We reduced the work RVU for 27096 from the RUC proposed value of 1.40 to 1.10 based on a weighted average with CPT code 20610 (Large joint injection-work RVU of 0.79) Commenters pointed out that while this was one of the codes used prior to approval of CPT code 27096, it (20610) was cited as being inadequate, because the sacroiliac joint injection requires more precision and skill than does a large joint (for example, hip) injection. They also indicated that the reduction made by HCFA to account for the fact that this procedure may be performed without contrast was not justified. In light of these comments we referred the code to a refinement panel for review.

Final decision: As a result of the statistical analysis of the refinement panel ratings, the final work RVUs are established as 1.40 for CPT code 27096.

CPT code 61862 Subcortical neurostimulator array implantation.

The RUC evaluated this code using a building block approach that included the work of sterotactic localization, the device implantation and 140 minutes of intra-operative testing.

A few commenters expressed concern about our rejection of the RUC recommendation of 27.34 work RVUs and our proposed 19.34 work RVUs. We subtracted 8.00 RVUs attributed to 140 minutes of intra-operative testing, since this time was variable and it could be reported under other CPT codes. The commenters explained that the assignment of surgeon work during this 140 minutes of electrode maneuvering was done by comparing the work, including intensity, to CPT code 99291 at an equivalent rate of 4.00 RVUs for each of the approximately 2 hours in this average. Information was provided during the discussion at the RUC that the time of 140 minutes was truly an average, with some testing requiring as long as 3 to 4 hours to achieve satisfactory electrode placement. The commenters recommended that we restore the missing 8.00 RVUs and accept the RUC recommendation of 27.34 for this code. Due to the questions concerning our reduction of 8.00 RVUs, we referred this code to a refinement panel for review.

Final decision: As a result of the statistical analysis of the refinement panel ratings we are retaining the work RVU of 19.34 for CPT code 61862.

CPT Code 61885 Incision and Subcutaneous Placement of Cranial Neurostimulator Pulse Generator or Receiver, Direct or Inductive Coupling; With Connection to a Single Electrode Array

CPT Code 61885 was revised to add a delimiter to the code that specified connection of the neurostimulator to a single electrode array, and a new code (CPT code 61886) was introduced for situations involving two or more electrode arrays. We had received recommendations for work RVUs for the revised CPT code 61885, as well as the new CPT code 61886. Commenters disagreed with our statement that there was no evidence to justify an increase in the work RVU for CPT code 61885. We also noted that the work RVU for this code had been increased in the last 5-year review. Commenters felt that the RUC analyses presented supported an increase in the work RVU. In light of these comments, we referred this code to the refinement panel for review.

Final decision: As a result of the statistical analysis of the refinement panel ratings, the final work RVUs are 5.85 for CPT code 61885.

CPT Code 62263 Percutaneous Lysis of Epidural Adhesions Using Solution Injection (for Example, Hypertonic Saline, Enzyme) or Mechanical Means (for Example, Spring-wound Catheter) Including Radiologic Localization (Includes Contrast When Administered)

This was a new CPT code for which the RUC had recommended work RVUs of 7.20. We reduced the value to 6.02 based on two determinations—(1) that the RUC had erroneously counted the insertion of a catheter twice in compiling the component services; and (2) the appropriate building block for the fluoroscopic guidance was code 76003, not 76005. Commenters requested that we reconsider these decisions. They indicated that they had intentionally doubled the value for catheter insertion, as insertion of a catheter into a tight scarred epidural space involved more work than the typical epidural injection. They also felt that the fluoroscopic code the RUC had used was appropriate, and more accurately reflected the work involved. In response to these comments, we referred this code to the refinement panel for review.

Final decision: As a result of our statistical analysis of the refinement panel ratings the final work RVU for CPT 62263 will be 6.14.

CPT Codes 62310, 62311, 62318, 62319 Epidural or Subarachnoid Spine Injection Procedures

We had agreed with the relativity of these new codes established by the RUC, but in order to retain budget neutrality within this family of codes, we had to uniformly reduce the RUC recommended values. Commenters indicated that our calculations of the amount of reduction in the work RVUs needed slight adjustments. The specialties involved in developing the work RVUs submitted the following re-scaled work RVUs that they felt were a better reflection of the budget neutrality adjustment while preserving the intra-family relativity of the new codes (62310–1.95; 62311–1.57; 62318–2.26; and 62319–1.88).

Final decision: We reviewed the work RVUs submitted by the specialty, and found the proposed work RVUs not to be budget neutral. We apply a standard technique, using the most recent available data, to arrive at budget neutral values. The work RVUs, as published in the November 1999 final rule will be retained.

CPT Code 72275 Epidurography

We reduced the work RVUs for this new code by approximately one third, from the 0.83 recommended by RUC to 0.54. Commenters disagreed with this reduction, noting that the comparison codes selected by HCFA medical staff to support this reduction did not accurately reflect the work involved. They indicated that the RUC survey reflected that there was a greater amount of time involved. This code was referred to the refinement panel for review.

Final decision: As a result of our statistical analysis of the refinement panel ratings, we are assigning a work RVU of 0.76 to CPT code 72275.

CPT Code 73542 Sacroiliac Joint Arthrography

The RUC recommended value of 0.64 work RVUs was reduced to 0.54 work RVUs based on our belief that there was no difference in work from the primary survey reference code (CPT code 73525 which has a work RVU of 0.54). Commenters disagreed with this reduction. Although the time estimates between CPT code 73542 and the reference code are similar, the mean intensity/complexity measures are consistently higher for CPT code 73542, and therefore warranted the RUC recommended work RVU of .64. The RUC valued this code not only according to the time required, but also according to the intensity of the service. Commenters recommended adoption of the RUC work RVUs of 0.64 for CPT code 73542. This code was referred to the refinement panel for review.

Final decision: As a result of our statistical analysis of the refinement panel ratings, we are assigning a work RVU of 0.59 to CPT code 73542.

CPT Code 76005 Fluoroscopic Guidance and Localization of Needle or Catheter Tip for Spine or Paraspinous Diagnostic or Therapeutic Injection Procedures (Epidural, Transforaminal Epidural, Subarachnoid, Paravertebral Facet Joint, Paravertebral Facet Joint Nerve or Sacroiliac Joint) Including Neurolytic Agent Destruction

The RUC recommended value of 0.60 work RVUs for this new code was reduced to 0.54, because we did not believe there was enough difference in work from the primary survey reference code 76003 (0.54 work RVUs). Commenters disagreed with this determination, and indicated that the survey data results were evidence that comparison between CPT codes 76005 and 76003 was not appropriate, since the survey showed more time for CPT code 76005, as well as a consistently higher estimation of intensity and complexity. Commenters also pointed out that another established code in the same family (CPT code 76001 with a work RVU of .67) was also previously used to report this service.

Final decision: The RUC recommended .60 work RVUs for CPT code 76005. We reduced this recommendation to .54 work RVUs based upon reference procedure CPT code 76003. We inadvertently failed to also examine the other reference procedures identified on the RUC survey. Based upon the other reference procedures which were listed, CPT code 76001 (work RVU = .67), we are changing the work RVU to the RUC recommended value of .60.

CPT Code 76873 Prostate Volume Study

We reduced the RUC recommendation of 1.92 work RVUs to .99, since we did not believe that general anesthesia is used in this procedure. Commenters disagreed with this point and indicated that, because the patient must remain motionless during the procedure, significant sedation, either general or spinal anesthesia, is used. Thus, this is usually performed in a hospital operating room (outpatient) or ambulatory surgical center. Commenters also objected to the comparison we made between this code (76873) and CPT code 76805 Echography, pregnant uterus, B-scan and/or real time with image documentation; complete. An obstetric ultrasound does not require anesthesia and is done in a physician's office. Commenters also questioned our statement that we would not allow payment for a prostate volume study when performed on the same day as seed implantation or other services that are part of seed implantation. During the RUC deliberations, it was specifically discussed that the prostate volume study was *not* included in the work for seed implantation (CPT code 55859). This code was referred to the refinement panel for review.

Final decision: As a result of our statistical analysis of the refinement panel ratings, we are assigning a work RVU of 1.55 to CPT code 76873.

CPT Codes 90471 and 90472 Immunization Administration

In the final rule published November 2, 1999, we included a discussion of practice expense inputs and omitted a discussion of the RUC recommended work RVUs for these codes. Commenters encouraged us to publish the values for these codes, noting that while these are not reimbursed under the Medicare program, fee schedule values provide guidance to other payers who use the fee schedule.

Final decision: While we realize that other payers may use the RVUs under

the physician fee schedule, since these are noncovered services under Medicare, we are not including values for these services in the fee schedule. The discussion on practice expense was erroneously included. As we indicated in an earlier discussion, we will be examining the issue of including values for noncovered services in the fee schedule.

CPT Codes 93741, 93742, 93743, 93744 Electronic Analysis of Pacing Cardioverter-Defibrillator

We reduced the RUC recommendations for work RVUs for these codes (93741–0.64; 93742–0.73; 93743–0.83, and 93744–0.95) because we felt there were inconsistencies between the recommendations and the survey data. Commenters stated that the differences in time reflected between the earlier surveys and three 1998 and 1999 surveys were a result of the large increase in the complexity of the technologies associated with these procedures over the last few years. With older devices, there was less information to analyze. The new technology provides more information, thus, the work involved is significantly greater than it was when the reference procedure was initially evaluated. These codes were referred to the refinement panel for review.

Final decision: As a result of our statistical analysis of the refinement panel ratings, we are assigning the following work RVUs: 93741–0.80, 93742–0.91, 93743–1.03, 93744–1.18.

Practice Expense Refinements of 2000 Interim and Related Relative Value Units

We received the following comments on the interim practice expense RVUs assigned to the new and revised CPT codes for 2000:

CPT Code 33410 Replacement, Aortic Valve, With Cardiopulmonary Bypass; With Stentless Tissue Valve

A specialty group commented that the practice expense RVUs for this code should be slightly higher than for CPT code 33406, Replacement, aortic valve, with cardiopulmonary bypass; with homograft valve (freehand), due to the difference in the grafts. However, the practice expense RVUs for CPT code 33410 are 0.09 less than the practice expense RVUs for CPT code 33406. The commenter adds that, due to this error, physicians have received unfairly low reimbursement for this procedure in CY 2000, and should receive fair compensation after this error is corrected.

Response: The RUC made no recommendation on the practice expense inputs for this code, but the Society of Thoracic Surgeons recommended that we crosswalk the direct inputs from those assigned to CPT code 33406, which we did. The identified payment anomaly did not exist in the practice expense RVUs published in our November 1999 final rule. There was a calculation error reflected in the published RVU values in the July 2000 proposed rule (65 FR 44210) that has been corrected in this final rule. We hope that the code will be refined soon, so that it will no longer be necessary to use a crosswalk for the practice expense inputs.

CPT Code 33249 Insertion or Repositioning of Electrode Lead(s) for Single or Dual Chamber Pacing Cardioverter Defibrillator and Insertion of Pulse Generator

We received comments from two organizations representing cardiology and pacing electrophysiology on the interim PE RVUs for this procedure. Both commenters indicated that the practice expense RVUs should be increased to account for the fact that under the revised definition, this procedure now includes the implantation of dual chamber ICDs.

Response: We did not receive a practice expense recommendation on this revised code from either the RUC or the specialty societies, and we kept the practice expense inputs at their original level. Because this is a procedure that would only be performed in the facility setting, an increase in the physician work involved to perform the service would not lead to an increase in the practice expense, unless there would be more post-surgical visits associated with the revised service. No claim has been made that this is the case. Therefore, we believe that there is no justification for increasing the practice expense RVUs.

CPT code 92961, Cardioversion, elective, electrical conversion of arrhythmia; internal (separate procedure)

One organization indicated that, for the PE inputs, we crosswalked this code to CPT code 93610, intra-atrial pacing, which does not include costs associated with a cardioversion, which is part of the procedure. They recommended that we use a building block approach, using inputs from CPT code 93610–26 (a similar intra-atrial pacing code) and CPT code 92960 (a similar cardioversion code) for establishing the PE RVUs.

Response: We did not originally receive a practice expense recommendation on this code from either the RUC or the specialty society. Because this is a 0-day procedure that would only be performed in the facility setting, there would be few or no direct inputs associated with the service. Thus, an increase in the physician work involved to perform the service would not lead to an increase in the practice expense. CPT code 92960 also has no inputs in the facility setting, so including that code as an added crosswalk, as recommended in the comment, would have no effect on the practice expense RVUs for CPT code 92961. Therefore, we are making no change in our recommended crosswalk.

CPT Code 93727 Electronic Analysis of Implantable Loop Recorder (ILR) System (Includes Retrieval of Recorded and Stored ECG Data, Physician Review and Interpretation of Retrieved ECG Data and Reprogramming)

Two organizations objected to our crosswalk of the practice expense inputs for this code from CPT code 93272, Patient demand single or multiple event recording with presymptom memory loop, per 30 day period of time; physician review and interpretation only. The commenters stated that this crosswalk does not accurately reflect all the practice expense inputs associated with the service, and recommended we crosswalk the inputs from CPT code 93271, Patient demand single or multiple event recording with presymptom memory loop, per 30 day period of time; monitoring, receipt of transmissions, and analysis.

Response: We did not originally receive a practice expense recommendation on this revised code from either the RUC or the specialty societies. We have reviewed this comment, and have changed the crosswalk as recommended by the commenters.

CPT 90471/72 Immunization Administration and CPT 99173 Visual Screening Test

Two organizations requested that we publish the RUC recommended values for these immunization codes, as well as the visual screening test and other services with RUC recommendations not reimbursed under Medicare, because other payors use the RVUs under the physician fee schedule.

Response: While we realize that other payers may use the RBRVS fee schedule, since these are non-covered services under Medicare, as indicated above, we are not including values for these services in the fee schedule.

We received the following comments on HCPCS codes established in the November 2, 1999 Final Rule:

G0166 External Counterpulsation

One commenter indicated this service was undervalued and recommended inputs for this code. We continue to believe that the values assigned in last year's rule are appropriate, and we are retaining these values.

G0167 Hyperbaric Oxygen Treatment

We received comments expressing concerns about the new code, G0167, Hyperbaric Oxygen Treatment Not Requiring Physician Attendance, per Treatment. The commenter requested that we clarify the intended use of this code. Our contractors have discretion to cover hyperbaric oxygen with or without physician supervision. Our coverage staff is currently reviewing hyperbaric oxygen therapy services policies generally, including the appropriate levels of physician supervision. The progress of this review can be tracked on our web site, http:\\www.hcfa.gov, by selecting Coverage Policies.

G0168 Wound Closure Utilizing Tissue Adhesives Only

One specialty was concerned that the services described by this code were not coded as a simple repair as recommended by the CPT panel. The commenter suggested that the cost of the supply, Dermabond, could be reimbursed separately. Another commenter was concerned about the 10-day global period assigned to this code.

The work and practice expense values for this code were based upon an evaluation and management visit, CPT code 99212, except that the price of Dermabond was added as a practice expense. We assigned these values because many of these wounds could have been closed with Steri-strips, a service that is also coded with evaluation and management, rather than a simple repair. We will be analyzing the use of HCPCS code G0168 to learn more about the use of this product, and will consider revaluing it after that analysis is completed.

Although we believe that the typical service involving the use of Dermabond as the only closure will typically not involve a visit for suture removal, we concede that, if another visit were needed for a complication, we should allow another evaluation and management visit. For this reason, we will change the global period to 0 days.

G0169 Removal of Devitalized Tissue, Without Use of Anesthesia

For 2000, we created G0169 to describe a service that involved removal of devitalized tissue. For 2001, CPT adopted a code 97601 that is sufficiently similar to the services described by G0169 that we will ask providers to utilize that code for selective removal of devitalized tissue, and we will eliminate G0169. We crosswalked the values for G0169 to CPT Code 97601. This code will continue to have no global period.

Establishment of Interim Work Relative Value Units for New and Revised Physician's Current Procedural Terminology Codes and New HCFA Common Procedure Coding System Codes for 2001 (Includes Table titled American Medical Association Specialty Relative Value Update Committee and Health Care Professionals Advisory Committee Recommendations and HCFA's Decisions for New and Revised 2001 CPT Codes)

One aspect of establishing RVUs for 2001 was related to the assignment of interim work RVUs for all new and revised CPT codes. As described in our November 25, 1992 notice in the 1993 fee schedule (57 FR 55983) and in section III.B. of our November 22, 1996 final rule (61 FR 59505 through 59506) we established a process, based on recommendations received from the AMA's RUC, for establishing interim work RVUs for new and revised codes.

This year we received work RVU recommendations for approximately 131 new and revised CPT codes from the RUC. Our staff and medical officers reviewed the RUC recommendations by comparing them to our reference set or to other comparable services for which work RVUs had been previously established, or to both of these criteria. We also considered the relationships among the new and revised codes for which we received RUC recommendations. We agreed with the majority of these relationships reflected in the RUC values. In some instances, when we agreed with the relationships, we revised the work RVUs to achieve work neutrality within families of codes, that is, the work RVUs have been adjusted so that the sum of the new or revised work RVUs (weighted by projected frequency of use) for a family will be the same as the sum of the current work RVUs (weighted by projected frequency of use). For approximately 91 percent of the RUC recommendations, proposed work RVUs were accepted, and for approximately 9 percent, we disagreed with the RUC recommendation. In a majority of instances, we agreed with the relativity proposed by the RUC, but needed to decrease work RVUs to retain budget neutrality.

There were also 38 CPT codes for which we did not receive a RUC recommendation. After a review of these CPT codes by our staff and medical officers, we established interim work RVUs for the majority of these services. For those services for which we could not arrive at interim work RVUs, we have assigned a carrier priced status until such time as the RUC provides work RVU recommendations.

We received 5 recommendations from the Health Care Professionals Advisory Committee (HCPAC). Two of the HCPAC recommendations were reduced while 3 of the recommendations were for services that we do not cover. Additionally, there were 2 services for which we did not receive recommendations from the HCPAC.

The table titled AMA RUC and HCPAC Recommendations and HCFA Decisions for New and Revised 2001 CPT Codes lists the new or revised CPT codes, and their associated work RVUs, that will be interim in 2001. This table includes the following information:

- A ''#'' identifies a new code for 2001.
- CPT code. This is the CPT code for a service.
- Modifier. A ''26'' in this column indicates that the work RVUs are for the professional component of the code.
- Description. This is an abbreviated version of the narrative description of the code.
- RUC recommendations. This column identifies the work RVUs recommended by the RUC.
- HCPAC recommendations. This column identifies the work RVUs recommended by the HCPAC.
- HCFA decision. This column indicates whether we agreed with the RUC recommendation (''agree'') or we disagreed with the RUC recommendation (''disagree''). Codes for which we did not accept the RUC recommendation are discussed in greater detail following this table. An ''(a)'' indicates that no RUC recommendation was provided. A discussion follows the table.
- HCFA Work RVUs. This column contains the RVUs for physician work based on our reviews of the RUC recommendations.
- 2001 Work RVUs. This column establishes the 2001 work RVUs for physician work.

AMA RUC AND HCPAC RECOMMENDATIONS AND HCFA DECISIONS FOR NEW AND REVISED 2001 CPT CODES

CPT* code	MOD	Description	RUC recommendation	HCPAC recommendation	HCFA decision	HCFA work RVU	2000 work RVU
11980#		IMPLANT HORMONE PELLET(S)	1.48		Agree	1.48	1.48
15342#		CULTURED SKIN GRAFT, 25 CM	1.50		Disagree	1.00	1.00
15343#		CULTURE SKN GRAFT ADDL 25 CM	0.38		Disagree	0.25	0.25
16035		INCISION OF BURN SCAB, INITI	3.75		Agree	3.75	3.75
16036#		INCISE BURN SCAB, ADDL INCIS	1.50		Agree	1.50	1.50
19100		BX BREAST PERCUT W/O IMAGE	1.27		Agree	1.27	1.27
19101		BIOPSY OF BREAST, OPEN	3.18		Agree	3.18	3.18
19102#		BX BREAST PERCUT W/IMAGE	2.00		Agree	2.00	2.00
19103#		BX BREAST PERCUT W/DEVICE	2.37		Agree	2.37	2.37
19120		REMOVAL OF BREAST LESION	5.56		Agree	5.56	5.56
19125		EXCISION, BREAST LESION	6.06		Agree	6.06	6.06
19126		EXCISION, ADDL BREAST LESION	2.93		Agree	2.93	2.93
19295#		PLACE BREAST CLIP, PERCUT	0.00		Agree	0.00	0.00
21199#		RECONSTR LWR JAW W/ADVANCE	16.00		Agree	16.00	16.00
22520#		PERCUT VERTEBROPLASTY THOR	8.91		Agree	8.91	8.91
22521#		PERCUT VERTEBROPLASTY LUMB	8.34		Agree	8.34	8.34
22522#		PERCUT VERTEBROPLASTY ADDL	4.31		Disagree	3.00	3.00
30465#		REPAIR NASAL STENOSIS	11.64		Agree	11.64	11.64
33140		HEART REVASCULARIZE (TMR)	20.00		Agree	20.00	20.00
33141#		HEART TMR W/OTHER PROCEDURE	4.84		Agree	4.84	4.84
33533		CABG, ARTERIAL, SINGLE	25.83		Agree	25.83	25.83
33534		CABG, ARTERIAL, TWO	28.82		Agree	28.82	28.82
33535		CABG, ARTERIAL, THREE	31.81		Agree	31.81	31.81
33536		CABG, ARTERIAL, FOUR OR MORE	34.79		Agree	34.79	34.79
34800#		ENDOVASC ABDO REPAIR W/TUBE	20.75		Agree	20.75	20.75
34802#		ENDOVASC ABDO REPR W/DEVICE	23.00		Agree	23.00	23.00
34804#		ENDOVASC ABDO REPR W/DEVICE	23.00		Agree	23.00	23.00
34808#		ENDOVASC ABDO OCCLUD DEVICE	4.13		Agree	4.13	4.13
34812#		XPOSE FOR ENDOPROSTH, AORTIC	6.75		Agree	6.75	6.75
34813#		XPOSE FOR ENDOPROSTH, FEMORL	4.80		Agree	4.80	4.80
34820#		XPOSE FOR ENDOPROSTH, ILIAC	9.75		Agree	9.75	9.75
34825#		ENDOVASC EXTEND PROSTH, INIT	12.00		Agree	12.00	12.00
34826#		ENDOVASC EXTEN PROSTH, ADDL	4.13		Agree	4.13	4.13
34830#		OPEN AORTIC TUBE PROSTH REPR	32.59		Agree	32.59	32.59
34831#		OPEN AORTOILIAC PROSTH REPR	35.34		Agree	35.34	35.34
34832#		OPEN AORTOFEMOR PROSTH REPR	35.34		Agree	35.34	35.34
35600#		HARVEST ARTERY FOR CABG	4.95		Agree	4.95	4.95
36540#		COLLECT BLOOD VENOUS DEVICE	0.00		Agree	0.00	0.00
36831		AV FISTULA EXCISION, OPEN	8.00		Agree	8.00	8.00
36832		AV FISTULA REVISION, OPEN	10.50		Agree	10.50	10.50
36870#		AV FISTULA REVISION, OPEN	5.16		Agree	5.16	5.16
38500		BIOPSY/REMOVAL, LYMPH NODES	2.88		Agree	2.88	2.88
38530		BIOPSY/REMOVAL, LYMPH NODES	6.13		Agree	6.13	6.13
43231#		ESOPH ENDOSCOPY W/US EXAM	4.09		Agree	4.09	4.09
43232#		ESOPH ENDOSCOPY W/US FN BX	4.71		Agree	4.71	4.71
43240#		ESOPH ENDOSCOPE W/DRAIN CYST	7.39		Agree	7.39	7.39
43241		UPPER GI ENDOSCOPY WITH TUBE	2.59		Agree	2.59	2.59
43242#		UPPR GI ENDOSCOPY W/US FN BX	5.51		Agree	5.51	5.51
43256#		UPPR GI ENDOSCOPY W STENT	([a])		([a])	4.35	4.35
43752#		NASAL/OROGASTRIC W/STENT	([a])		([a])	0.00	0.00
44132#		ENTERECTOMY, CADAVER DONOR	carrier		Disagree	0.00	0.00
44133#		ENTERECTOMY, LIVE DONOR	carrier		Disagree	0.00	0.00
44135#		INTESTINE TRANSPLNT, CADAVER	carrier		Disagree	0.00	0.00
44136#		INTESTINE TRANSPLANT, LIVE	carrier		Disagree	0.00	0.00
44370#		SMALL BOWEL ENDOSCOPY/STENT	([a])		([a])	4.33	4.33
44379#		S BOWEL ENDOSCOPE W/STENT	([a])		([a])	7.07	7.07
44383#		ILEOSCOPY W/STENT	([a])		([a])	2.41	2.41
44397#		COLONOSCOPY W STENT	4.78		Disagree	4.23	4.23
44500		INTRO, GASTROINTESTINAL TUBE	0.49		Agree	0.49	0.49
45327#		PROCTOSIGMOIDOSCOPY W/STENT	2.66		Disagree	1.46	1.46
45341#		SIGMOIDOSCOPY W/ULTRASOUND	3.46		Agree	3.46	3.46
45342#		SIGMOIDOSCOPY W/US GUIDE BX	4.08		Agree	4.08	4.08
45345#		SIGMODOSCOPY W/STENT	2.92		Disagree	2.66	2.66
45387#		COLONOSCOPY W/STENT	5.66		Disagree	5.62	5.62
47379#		LAPAROSCOPE PROCEDURE, LIVER	carrier		Agree	carrier	carrier
50545#		LAPARO RADICAL NEPHRECTOMY	24.00		Agree	24.00	24.00
50546		LAPAROSCOPIC NEPHRECTOMY	20.48		Agree	20.48	20.48
50548		LAPARO REMOVE K/URETER	24.40		Agree	24.40	24.40
50947#		LAPARO NEW URETER/BLADDER	24.50		Agree	24.50	24.50
50948#		LAPARO NEW URETER/BLADDER	22.50		Agree	22.50	22.50

AMA RUC AND HCPAC RECOMMENDATIONS AND HCFA DECISIONS FOR NEW AND REVISED 2001 CPT CODES—Continued

CPT* code	MOD	Description	RUC recommendation	HCPAC recommendation	HCFA decision	HCFA work RVU	2000 work RVU
50949#		LAPAROSCOPE PROC, URETER	carrier		Agree	carrier	carrier
52341#		CYSTO W/URETER STRICTURE TX	6.00		Agree	6.00	6.00
52342#		CYSTO W/UP STRICTURE TX	6.50		Agree	6.50	6.50
52343#		CYSTO W/RENAL STRICTURE TX	7.20		Agree	7.20	7.20
52344#		CYSTO/URETERO, STONE REMOVE	7.70		Agree	7.70	7.70
52345#		CYSTO/URETERO W/UP STRICTURE	8.20		Agree	8.20	8.20
52346#		CYSTOURETERO W/RENAL STRICT	9.23		Agree	9.23	9.23
52351#		CYSTOURETRO & OR PYELOSCOPE	5.86		Agree	5.86	5.86
52352#		CYSTOURETRO W/STONE REMOVE	6.88		Agree	6.88	6.88
52353#		CYSTOURETERO W/LITHOTRIPSY	7.97		Agree	7.97	7.97
52354#		CYSTOURETERO W/BIOPSY	7.34		Agree	7.34	7.34
52355#		CYSTOURETERO W/EXCISE TUMOR	8.82		Agree	8.82	8.82
52400#		CYSTOURETERO W/CONGEN REPR	9.68		Agree	9.68	9.68
54512#		EXCISE LESION TESTIS	8.58		Agree	8.58	8.58
54522#		ORCHIECTOMY, PARTIAL	9.50		Agree	9.50	9.50
55873#		CRYOABLATE PROSTATE	17.80		Agree	17.80	17.80
57022#		I &D VAGINAL HEMATOMA, OB	2.56		Agree	2.56	2.56
57023#		I &D VAG HEMATOMA, TRAUMA	(a)		(a)	2.56	2.56
57287#		REVISE/REMOVE SLING REPAIR	10.71		Agree	10.71	10.71
58353#		ENDOMETR ABLATE, THERMAL	3.56		Agree	3.56	3.56
61697#		BRAIN ANEURYSM REPR, COMPLX	50.52		Agree	50.52	50.52
61698#		BRAIN ANEURYSM REPR, COMPLX	48.41		Agree	48.41	48.41
61700		BRAIN ANEURYSM REPR , SIMPLE	50.52		Agree	50.52	50.52
61702		INNER SKULL VESSEL SURGERY	48.41		Agree	48.41	48.41
62252#	26	CSF SHUNT REPROGRAM	0.74		Agree	0.74	0.74
63040		LAMINOTOMY, SINGLE CERVICAL	(a)		(a)	18.81	18.81
63042		LAMINOTOMY, SINGLE LUMBAR	(a)		(a)	17.47	17.47
63043#		LAMINOTOMY, ADDL CERVICAL	(a)		(a)	0.00	0.00
63044#		LAMINOTOMY, ADDL LUMBAR	(a)		(a)	0.00	0.00
64612		DESTROY NERVE, FACE MUSCLE	1.96		Agree	1.96	1.96
64613		DESTROY NERVE, SPINE MUSCLE	1.96		Agree	1.96	1.96
64614#		DESTROY NERVE, EXTREM MUSC	2.20		Agree	2.20	2.20
66982#		CATARACT SURGERY, COMPLEX	13.50		Agree	13.50	13.50
66984		CATARACT SURG W/IOL, I STAGE	10.23		Agree	10.23	10.23
67221#		OCULAR PHOTODYNAMIC THER	(a)		(a)	4.01	4.01
69714#		IMPLANT TEMPLE BONE W/STIMUL	14.00		Agree	14.00	14.00
69715#		TEMPLE BNE IMPLNT W/STIMULAT	18.25		Agree	18.25	18.25
69717#		TEMPLE BONE IMPLANT REVISION	14.98		Agree	14.98	14.98
69718#		REVISE TEMPLE BONE IMPLANT	18.50		Agree	18.50	18.50
70496#		CT ANGIOGRAPHY, HEAD	1.75		Agree	1.75	1.75
70498#		CT ANGIOGRAPHY, NECK	1.75		Agree	1.75	1.75
70540	26	MRI ORBIT/FACE/NECK W/O DYE	1.48		Disagree	0.98	0.98
70542#	26	MRI ORBIT/FACE/NECK W/DYE	1.78		Disagree	1.17	1.17
70543#	26	MRI ORBT/FAC/NCK W/O&W DYE	2.36		Disagree	1.56	1.56
70544#	26	MR ANGIOGRAPHY HEAD W/O DYE	1.20		Agree	1.20	1.20
70545#	26	MR ANGIOGRAPHY HEAD W/DYE	1.20		Agree	1.20	1.20
70546#	26	MR ANGIOGRAPH HEAD W/O&W DYE	1.80		Agree	1.80	1.80
70547#	26	MR ANGIOGRAPHY NECK W/O DYE	1.20		Agree	1.20	1.20
70548#	26	MR ANGIOGRAPHY NECK W/DYE	1.20		Agree	1.20	1.20
70549#	26	MR ANGIOGRAPH NECK W/O&W DYE	1.80		Agree	1.80	1.80
71275#	26	CT ANGIOGRAPHY, CHEST	(a)		(a)	1.20	1.20
71550	26	MRI CHEST W/O DYE	(a)		(a)	1.10	1.10
71551#	26	MRI CHEST W/DYE	(a)		(a)	1.30	1.30
71552#	26	MRI CHEST W/O&W DYE	(a)		(a)	1.70	1.70
72191#	26	CT ANGIOGRAPH PELV W/O&W DYE	(a)		(a)	1.20	1.20
72195#	26	MRI PELVIS W/O DYE	(a)		(a)	1.10	1.10
72196	26	MRI PELVIS W/DYE	(a)		(a)	1.30	1.30
72197#	26	MRI PELVIS W/O & W DYE	(a)		(a)	1.70	1.70
73206#	26	CT ANGIO UPR EXTRM W/O&W DYE	(a)		(a)	1.20	1.20
73218#	26	MRI UPPER EXTREMITY W/O DYE	(a)		(a)	0.98	0.98
73219#	26	MRI UPPER EXTREMITY W/DYE	(a)		(a)	1.17	1.17
73220	26	MRI UPPR EXTREMITY W/O&W DYE	(a)		(a)	1.56	1.56
73221	26	MRI JOINT UPR EXTREM W/O DYE	(a)		(a)	0.98	0.98
73222#	26	MRI JOINT UPR EXTREM W/ DYE	(a)		(a)	1.17	1.17
73223#	26	MRI JOINT UPR EXTR W/O&W DYE	(a)		(a)	1.56	1.56
73706#	26	CT ANGIO LWR EXTR W/O&W DYE	(a)		(a)	1.20	1.20
73718#	26	MRI LOWER EXTREMITY W/O DYE	(a)		(a)	0.98	0.98
73719#	26	MRI LOWER EXTREMITY W/DYE	(a)		(a)	1.17	1.17
73720	26	MRI LWR EXTREMITY W/O&W DYE	(a)		(a)	1.56	1.56

AMA RUC AND HCPAC RECOMMENDATIONS AND HCFA DECISIONS FOR NEW AND REVISED 2001 CPT CODES—Continued

CPT* code	MOD	Description	RUC recommendation	HCPAC recommendation	HCFA decision	HCFA work RVU	2000 work RVU
73721	26	MRI JOINT OF LWR EXTRE W/O D	(a)		(a)	0.98	0.98
73722#	26	MRI JOINT OF LWR EXTR W/DYE	(a)		(a)	1.17	1.17
73723#	26	MRI JOINT LWR EXTR W/O&W DYE	(a)		(a)	1.56	1.56
74175#	26	CT ANGIO ABDOM W/O&W DYE	(a)		(a)	1.20	1.20
74181	26	MRI ABDOMEN W/O DYE	(a)		(a)	1.10	1.10
74182#	26	MRI ABDOMEN W/DYE	(a)		(a)	1.30	1.30
74183#	26	MRI ABDOMEN W/O&W DYE	(a)		(a)	1.70	1.70
75635#	26	CT ANGIO ABDOMINAL ARTERIES	(a)		(a)	1.89	1.89
75952#		ABDOM ANEURYSM ENDOVAS RPR	4.00		Agree	4.00	4.00
75953#		ABDOM ANEURYSM ENDOVAS RPR	1.36		Agree	1.36	1.36
76012#		PERCUT VERTEBROPLASTY FLUOR	1.31		Agree	1.31	1.31
76013#		PERCUT VERTEBROPLASTY, CT	1.38		Agree	1.38	1.38
76393#	26	MR GUIDANCE FOR NEEDLE PLACE	1.50		Agree	1.50	1.50
76818	26	FETL BIOPHYS PROFIL W/STRESS	1.05		Disagree	0.86	0.86
76819#	26	FETL BIOPHYS PROFIL W/O STRS	0.77		Disagree	0.63	0.63
76975	26	GI ENDOSCOPIC ULTRASOUND	0.81		Agree	0.81	0.81
77520	26	PROTON TRMT, SIMPLE W/O COMP	carrier		Agree	carrier	carrier
77522#	26	PROTON TRMT, SIMPLE W/COMP	carrier		Agree	carrier	carrier
77523	26	PROTON TRMT, INTERMEDIATE	carrier		Agree	carrier	carrier
77525#	26	PROTON TREATMENT, COMPLEX	carrier		Agree	carrier	carrier
90940#		HEMODIALYSIS ACCESS STUDY	0.00		Agree	0.00	0.00
91132#		ELECTROGASTROGRAPHY	carrier		Agree	carrier	carrier
91133#		ELECTROGASTROGRAPHY W/TEST	carrier		Agree	carrier	carrier
92585		AUDITOR EVOKE POTENT, COMPRE	0.50		Agree	0.50	0.50
92586#		AUDITOR EVOKE POTENT, LIMIT	0.00		Agree	0.00	0.00
93662#		INTRACARDIAC ECG (ICE)	2.80		Agree	2.80	2.80
93668#		PERIPHERAL VASCULAR REHAB	0.00		Agree	0.00	0.00
96570#		PHOTODYNAMIC TX, 30 MIN	1.10		Agree	1.10	1.10
96571#		PHOTODYNAMIC TX, ADDL 15 MIN	0.55		Agree	0.55	0.55
97532#		COGNITIVE SKILLS DEVELOPMENT		0.51	Disagree	0.44	0.44
97533#		SENSORY INTEGRATION		0.48	Disagree	0.44	0.44
97601#		WOUND CARE SELECTIVE		(a)	(a)	0.50	0.50
97602#		WOUND CARE NON-SELECTIVE		(a)	(a)	0.00	0.00
97802#		MEDICAL NUTRITION, INDIV, IN		0.45	Disagree	0.00	0.00
97803#		MED NUTRITION, INDIV, SUBSEQ		0.37	Disagree	0.00	0.00
97804#		MEDICAL NUTRITION, GROUP		0.25	Diagree	0.00	0.00
99172#		OCULAR FUNCTION SCREEN	0.00		Agree	0.00	0.00

[a] No RUC recommendation provided.
New Codes.
* All numeric HCPCS CPT Copyright 2000 American Medical Association.

Discussion of Codes for Which There Were No RUC Recommendations or for Which the RUC Recommendations Were Not Accepted

The following is a summary of our rationale for not accepting particular RUC work RVU recommendations. It is arranged by type of service in CPT order. Additionally, we also discuss those CPT codes for which we received no RUC recommendations for physician work RVUs. This summary refers only to work RVUs.

Bioengineered Tissue Grafts (CPT Codes 15342 and 15343)

Temporary HCPCS Codes G0170 and G0171, established in the November 1999 final rule, will be deleted. The two aforementioned deleted codes have been replaced by CPT codes 15342 and 15343. The RUC recommended that the work RVUs for CPT codes 15342 and 15343 be crosswalked from deleted HCPCS codes G0170 and G0171, which are currently being used to report bioengineered tissue grafts. The work RVUs for CPT codes 15342 and 15343 are crosswalked from G0170 and G0171, with the following modification. Currently, HCPCS code G0170 includes the work of CPT codes 15000 and 15350. The CPT instructions for CPT code 15342 state that it can be billed with CPT code 15000. For this reason the crosswalk for CPT code 15342 would be to 25 percent of the work RVU of CPT code 15350, or 1.00 work RVUs. This percentage was chosen because CPT code 15342 is for graft sizes of up to 25 square centimeters, and CPT code 15350 is for graft sizes up to 100 square centimeters. Similarly, the RUC recommended work RVUs for CPT code 15343 are adjusted to 25 percent of 15351, or 0.25 work RVUs.

Additionally, we note that some commenters requested the global period for HCPCS code G0170 be lowered from ten to seven days. This was not done, because we use only three global period lengths zero, ten, and ninety days. Clearly the ten-day global period is the most appropriate and consistent with the recommendation of the commenters. This decision will be applied to CPT code 15342. CPT code 15343 is an add-on service that does not have a global period.

Percutaneous Vertebroplasty (CPT Code 22522)

The RUC recommended a work RVU of 4.31 for CPT code 22522. The RUC arrived at this value based upon the fact that the work involved with CPT code 22522 was 50 percent of the total work of CPT codes 22520 and 22521. The RUC failed to remove the pre-service

99213 and the post-service 99238 associated with CPT codes 22520 and 22521 before performing their calculations. CPT code 22522 is an add-on procedure, and there should be no pre-and post-service work associated with this service. We have removed the work RVUs of 99213 (pre-service) and 99238 (post-service) from the weighted average of CPT codes 22520 and 22521. For this reason, we have assigned a work RVU of 3.00 to CPT code 22522.

Naso- or Oro-gastric Tube Placement (CPT Code 43752)

The RUC did not supply us with a recommendation for CPT code 43752. We believe that this service is bundled into evaluation and management services. For this reason, there is no work RVU associated with this service.

Small Bowel Implantation (CPT Codes 44132, 44133, 44135, and 44136)

The RUC recommended carrier pricing for these services. These services are not covered transplant services under Medicare. For this reason, there are no work RVUs associated with these services.

Endoscopic Enteral Stenting (CPT Codes 43256, 44370, 44379, 44383, 44397, 45327, 45345, 45387)

The RUC determined a work increment, from the applicable endoscopic base code, for transendoscopic stent placement including predilation of 1.96 RVUs. We agree with this increment. For the endoscopic stent placement CPT codes for which we did not receive a work recommendation from the RUC, we applied this increment to the applicable endoscopic basecode. Because endoscopic stent placement is being currently billed under existing endoscopic CPT codes, we needed to make a work neutrality adjustment to each family of codes in which a stent placement code had been created.

Incision and Drainage of Vaginal Hematoma (CPT Code 57023)

The RUC did not supply a work RVU recommendation for CPT code 57023. We did receive a work RVU recommendation for similar CPT code 57022. Until such time as we receive more information allowing us to appropriately value CPT code 57023, we will adopt the RUC recommended work RVU for CPT code 57022. For these reasons, we have assigned a work RVU of 2.56 to CPT code 57023.

Laminotomy Re-Exploration (CPT Codes 63040, 63042, 63043, and 63044)

The RUC did not supply work RVU recommendations for CPT codes 63040 through 63044. CPT codes 63040 and 63042 were revised to account for single interspace cervical and lumbar laminotomy, respectively. CPT codes 63043 and 63044 were added to account for each additional cervical and lumbar interspace laminotomy(s). We will bundle CPT code 63043 into CPT code 63040 and CPT code 63044 into CPT code 63042, and retain the existing work RVUs for CPT codes 63040 and 63042. We will re-evaluate these services when the RUC supplies work RVU recommendations.

Ocular Photodynamic Therapy (CPT Code 67221)

The RUC did not supply work RVU recommendations for CPT code 67221. Subsequent to the publication of the July 2000 proposed rule in which we proposed establishing a new HCPCS code for this service, the CPT editorial panel approved CPT code 67221 for ocular photodynamic therapy. We have deleted our proposed temporary code and established values for CPT code 67221. Based on comments received from specialty societies and a comparison of the work values for this procedure with CPT code 67210, Destruction of localized lesion of retina, we have assigned 4.01 work RVUs to this service. The intraservice times and work intensities for CPT codes 67210 and 67221 are comparable. Therefore, adjusting for the work value of the postoperative visits (because 67210 has a 90-day global period) and the 20 percent retreatment rate included in CPT code 67210, and then applying the intraservice work intensity of 67210 to 67221, yields an appropriate work value for 67221. For a further discussion of this issue, see section II.G.

Computed Tomographic Angiography (CPT Codes 71275, 72191, 73206, 73706, 74175, and 75635)

CPT created a series of new codes for 2001 describing computed tomographic (CT) angiography for different parts of the body. The RUC submitted work recommendations of 1.75 RVUs for CPT codes 70496 and 70498, with which we agree. The RUC did not submit work recommendations for the other CT angiography codes. The RUC compared the head and neck CPT angiography codes to MRI angiography and CT scans without contrast followed by contrast of the same region in determining the values for these services. However, upon our review, we determined that the work RVUs recommended by the RUC were more comparable to the work RVUs associated with CPT code 75671, Angiography, carotid, cerebral, bilateral, radiological interpretation and supervision, and CPT code 75680, Angiography, carotid, cervical, bilateral, radiological interpretation and supervision. Both CPT code 75671 and CPT code 75680 have work RVUs of 1.66. The proportional work RVU increase from the angiography supervision and interpretation code to the CT angiography code was 1.05. Therefore, in determining the work RVUs of the other CT angiography codes, we—(1) compared each code to its most comparable angiographic radiological supervision and interpretation code, and (2) applied a proportionate work increase of 1.05 to the CT angiography code. The CPT codes to which we compared the CT angiography codes were 75605, 75736, 75710, 75625, and 75630. Note that CT angiography of the extremities has been valued as a unilateral service. However, CPT code 75635 is valued for bilateral lower extremity run.

Magnetic Resonance Imaging Procedures (CPT Codes 70540, 70542, 70543, 71550, 71551, 71552, 72195, 72196, 72197, 73218, 73219, 73220, 73221, 73222, 73223, 73718, 73719, 73720, 73721, 73722, 73723, 74181, 74182, and 74183)

CPT 2000 has a single code to describe MRI of each region of the body except for MRI of the brain, where three separate codes exist that describe MRI of the brain without contrast, with contrast, and without contrast followed by contrast. For CPT 2001 the single MRI code for each area of the body will be broken out into three separate CPT codes describing MRI for that body area without contrast, with contrast, and without contrast followed by contrast.

The only codes for which we received work RVU recommendations from the RUC were CPT 70540 (MRI orbit/face/neck, w/o contrast), 70542 (MRI orbit/face/neck, w/contrast), and 70543 (MRI orbit/face/neck, w/out then w/contrast). The recommended work RVUs were 1.48, 1.78, and 2.36 respectively. The services that will be described under these three CPT codes are currently being coded under a single CPT code, 70540 (current descriptor is Magnetic Resonance (*e.g.* proton) imaging, orbit, face, and neck with a current work RVU of 1.48). For this reason we must make the new CPT codes work neutral to the current CPT code; that is, the total work RVUs associated with the three new codes must result in the same total work RVUs of the current CPT code. The RUC

recommendations were not work neutral. Since neither the RUC nor the specialty society supplied us with relative utilization rates for these CPT codes, we applied the current relative utilization pattern for MRI of the brain. MRI of the brain currently has three separate CPT codes for MRI without contrast, with contrast, and without contrast followed by contrast. This resulted in work RVUs of 0.98, 1.17, and 1.56 for MRI of the orbit, face, and neck without contrast, with contrast, and without contrast followed by contrast, respectively.

We did not receive work recommendations or utilization data for any of the other new MRI codes. In each case, a single MRI code describing MRI of a body area was broken out into three codes describing MRI of that body area without contrast, with contrast, and without contrast followed by contrast. In order to assign appropriate work values for these codes, we followed the following procedure for MRI of each body area—(1) we assigned a work RVU to MRI without contrast, MRI with contrast, and MRI without contrast followed by contrast that maintained the same relationship as the work RVUs the RUC assigned to the three codes for MRI of the orbit, face, and neck, (2) we determined the total work RVUs for the body area by utilization of the current MRI code for that body area, (3) we applied the relative utilization of the brain MRI codes to the new MRI codes for each body area, and (4) we adjusted the work RVUs assigned in step 1 for MRI of each body area to make them work neutral to the work RVUs determined from step 2.

Fetal Biophysical Profile (CPT Code 76818 and CPT Code 76819)

The RUC recommended a work RVU of 1.05 for CPT code 76818 and 0.77 for CPT code 76819. Although we agree with the relativity established by the RUC, the codes needed to be adjusted for budget neutrality. For this reason, we have assigned 0.86 work RVUs to CPT code 76818 and 0.63 work RVUs to CPT code 76819.

Sensory Integrative Techniques (CPT Code 97532 and CPT Code 97533)

The RUC recommended a work RVU of 0.51 for CPT code 97532 and 0.48 for CPT code 97533. These two new services were created to replace the deleted CPT code 97770. We believe the work associated with these two new services is analogous to deleted CPT code 97770. For this reason, we have assigned the same work RVU (0.44) that was assigned to deleted CPT code 97770 to both CPT code 97532 and CPT code 97533.

Active Wound Care Management (CPT Code 97601 and CPT Code 97602)

The HCPAC did not supply a work RVU recommendation for either CPT code 97601 or CPT code 97602. We had established temporary HCPCS code G0169 for the work described in new CPT code 97601. For this reason, we have assigned the same work RVU (0.50) to CPT code 97601 that was assigned to now-deleted HCPCS code G0169. We consider CPT code 97602 to be bundled into CPT code 97601 and therefore will not establish work RVUs for this service.

Medical Nutrition Therapy (CPT Codes 97802 Through 97804)

The HCPAC supplied work RVU recommendations of: 0.45 for CPT code 97802, 0.37 for CPT code 97803, and 0.25 for CPT code 97804. These services do not fall under any enumerated category of Medicare services, and thus these services are not covered by Medicare. Additionally, these services are not physician services and, therefore, would not be assigned physician work RVUs. Finally, the American Diabetic Association is unhappy with the descriptors CPT has assigned to CPT codes 97802 through 97804, and is in the process of submitting a request to CPT for a revision to the descriptors for these services. For these reasons, we have decided not to assign work RVUs to these services.

Establishment of Interim Practice Expense Relative Value Units for New and Revised Physician's Current Procedural Terminology (CPT) Codes and New HCFA Common Procedure Coding System Codes for 2001.

We have developed a process for establishing interim practice expense RVUs (PERVUs) for new and revised codes that is similar to that used for work RVUs. Under this process, the RUC recommends the practice expense direct inputs, that is, the staff time, supplies and equipment associated with each new code. We then review the recommendations in a manner similar to our evaluation of the recommended work RVUs.

The RUC recommendations on the practice expense inputs for the new and revised 2001 codes were submitted to us as interim recommendations. We, therefore, consider that these recommendations are still subject to further refinement by the PEAC, or by us, if it is determined that such future review is needed. We do have concerns regarding some of the recommended inputs, particularly clinical staff times, for certain services, and we may revisit these inputs in light of future decisions of the PEAC regarding supply and equipment packages and standardized approaches to pre- and post-service clinical staff times.

We have accepted, at least in the interim, almost all of the practice expense recommendations submitted by the RUC for the codes listed in the following table titled ''AMA RUC and HCPAC Recommendations and HCFA Decisions for New and Revised 2001 CPT Codes.'' We made the following minor changes to the inputs where relevant:

- We rounded all clinical staff time to the nearest minute.
- For consistency with the CPEP revisions contained in the November 1999 final rule, we deleted separately billable fluid and contrast material, and the skin marking pen, disinfectant and biohazard bag, because these items cannot easily be allocated to individual services.
- The RUC assigned the E/M visit supply package, which includes a tongue depressor, drape sheet, and disposable otoscope speculum, as well as the E/M equipment package, which includes an otoscope-ophthalmoscope, to several vascular, spine and other post-surgical visits. We deleted the otoscope-ophthalmoscope, because it is not typically used for such post-surgical visits and, instead of the E/M visit supply package, substituted the multi-specialty minimum visit supply package that includes: exam table paper, patient gown, pillow case, nonsterile gloves, and thermometer probe cover. We also added a patient education book.
- For those codes refined before the multi-specialty minimum visit supply package was adopted, we substituted this package for the list of individual items when they matched exactly. In the same manner, we substituted the ophthalmology visit supply package as appropriate.
- For CPT 11980, Subcutaneous hormone pellet implantation, we deleted the disinfectant solution because it is already included in the OB–GYN visit supply package assigned to this code.
- The RUC only priced CPT 36870, Thrombectomy, percutaneous, arteriovenous fistula, in the office setting. We added inputs for the facility setting, using the clinical staff time for coordinating pre-surgery services and providing pre-service education, as well as the clinical staff time for the one post-surgical visit. We also added the supply and equipment inputs for the post-surgical visit. For the non-facility setting, we added a multi-specialty

minimum visit supply package for the post-surgical visit. However, we deleted the oxygen tank from the equipment inputs, because it appeared that it is only used on a stand-by basis, and would thus be considered an indirect cost.

• The RUC Health Care Professional Advisory Committee submitted a recommendation on the inputs for CPT 97533, Sensory integrative techniques. The inputs included a long list of specific equipment that we have combined into one package called ''sensory integration equipment.''

• The RUC deferred making a recommendation on the practice expense inputs for CPT 43752, Naso- or oro-gastric tube placement. We have assumed that this service is performed only in the facility setting, and, as a 0-day global, has no direct inputs.

For the following CPT codes we did not receive practice expense recommendations. Therefore, we are providing practice expense inputs through crosswalking to an existing code as indicated below:

New CPT code		Existing CPT code	
43256	Upper GI Endoscopy	43241	Upper GI endoscopy with tube.
44370	Small bowel endoscopy/stent	44363	Endocholaniopancreatograph.
44379	S bowel endoscope w/stent	44377	Small bowel endoscopy/biopsy.
44383	Ileoscopy w/stent	44382	Small bowel endoscopy.
57023	I&D vag hematoma, trauma	57022	I&D vag hematoma,ob.
71275	CT angiography, chest	71270–TC	Contrast CAT scans of chest.
71551	CT angiography, chest	70552–TC	Magnetic image, brain (MRI).
71552	MRI chest w/o&w dye	70553–TC	Magnetic image, brain (MRI).
72191	CT angiograph pelv w/o&w dye	72194–TC	Contrast CAT scans of pelvis.
72195	MRI pelvis w/o dye	70551–TC	Magnetic image , brain (MRI).
72197	MRI pelvis w/o&w dye	70553–TC	Magnetic image, brain (MRI).
73206	CT angio upr extrm w&w/o dye	73202–TC	Contrast CAT scans of arm.
73218	MRI uppr extremity w/o dye	70551–TC	Magnetic image , brain (MRI).
73219	MRI uppr extremity w/ dye	70552–TC	Magnetic image, brain (MRI).
73222	MRI joint upr extrem w/dye	70552–TC	Magnetic image, brain (MRI).
73223	MRI joint upr extr w/o&w dye	70553–TC	Magnetic image, brain (MRI).
73706	CT angio lwr extr w/o&w dye	73702–TC	Contrast CAT scans of leg.
73718	MRI lower extremity w/o dye	70551–TC	Magnetic image , brain (MRI).
73719	MRI lower extremity w/ dye	70552–TC	Magnetic image, brain (MRI).
73722	MRI joint of lwr extr w/dye	70552–TC	Magnetic image, brain (MRI).
73723	MRI joint lwr extr w/o&w dye	70553–TC	Magnetic image, brain (MRI).
74175	CT angio abdom w/o&w dye	74170–TC	Contrast CAT scans, abdomen.
74182	MRI abdomen w/dye	70552–TC	Magnetic image, brain (MRI).
74183	MRI abdomen w/o& w dye	70553–TC	Magnetic image, brain (MRI).
75635	CT angio abdominal arteries	74170–TC	Contrast CAT scans, abdomen.

C. Other Changes to the 2001 Physician Fee Schedule and Clarification of CPT Definitions

For the 2001 physician fee schedule, we are establishing or revising several alpha-numeric HCPCS codes for reporting certain services that are not clearly described by existing CPT codes. This is in addition to the HCPCS codes for ocular photodynamic therapy, certification/recertification for home health services and care plan oversight previously discussed. We view these codes as temporary since we will be referring them to the CPT Editorial Panel for possible inclusion in future editions of CPT. Additionally, included in this section are some clarifications of proper use of some new or revised codes.

Evaluation of Swallowing Function

We are proposing the following new codes to describe the evaluation of swallowing function. These codes will replace the more general CPT 92525, Evaluation of swallowing and oral function for feeding, which represents a combination of these separate examinations. Our contractors requested the more precise coding to improve claims review for evaluation of dysphagia. The new codes are described as follows:

G0193 Endoscopy study of swallowing function, often referred to as fiberoptic endoscopic evaluation of swallowing (FEES).

G0194 Sensory testing during endoscoping study of swallowing. This service, often referred to as fiberoptic endoscopic evaluation of swallowing with testing, will be coded as an add-on code to G0193.

The creation of these two codes does not imply coverage. Coverage of G0193 and G0194 remains at the discretion of the contractor processing the Medicare claim. These codes will be priced by contractors.

Two additional codes are also used to describe swallowing evaluations:

G0195 Clinical evaluation of swallowing function. This service describes the clinical examination and evaluation of the patient, typically by a speech and language pathologist.

G0196 Evaluation of swallowing involving swallowing of radio-opaque materials. This code involves the participation and interpretation of results from the dynamic observation of the patient swallowing materials of various consistencies. It is observed fluoroscopically and typically recorded on video. This evaluation involves using the information to assess the patient's swallowing function and developing a treatment plan for the patient.

Both codes G0195 and G0196 will be assigned the same work and malpractice RVUs as CPT 92525. For practice expense, we have crosswalked the inputs from 92525 for these codes. CPT 92525 will no longer be an active code for Medicare.

Note that CPT 31575 (laryngoscopy, flexible fiberoptic, diagnostic) and CPT 31579 (laryngoscopy, flexible or rigid fiberoptic, with stroboscopy) should not be used for evaluations of swallowing.

Speech-Generating Devices

Because of the change in coverage policy on speech-generating devices, effective January 1, 2001, we needed codes that more specifically describe the services needed to evaluate and train patients to use these devices. As a result, we will be replacing CPT 92597, Evaluation for use and/or fitting of voice prosthetic or augmentative/alternative

communication device to supplement oral speech) and 92598, Modification of voice prosthetic or augmentative/alternative communication device or supplemental oral speech, with the following new codes:

G0197 Evaluation of patient for prescription of speech-generating devices. This code describes the services to evaluate a patient to specify the speech-generating device recommended to meet the patient's needs and capacity for use. This code involves face-to-face involvement of the practitioner (typically a speech and language pathologist experienced in the use of these devices) with the patient. The work and malpractice RVUs for this new code will be cross-walked to the ones used for CPT code 92597, the code it replaces. For practice expense, we have crosswalked the inputs to CPT code 92527 for these codes.

G0198 Patient adaptation and training for use of speech-generating devices. This code describes the services delivered to the patient to adapt the device to the patient, and train him or her in its use. This code involves face-to-face involvement of the practitioner (typically a speech and language pathologist experienced in the use of these devices) with the patient. The work and malpractice RVUs, as well as the practice expense inputs for this new code, will be crosswalked to the ones used for CPT code 92598, the code it replaces.

G0199 Re-evaluation of patient using speech-generating devices. This code describes the services to re-evaluate a patient who has previously been evaluated for a speech-generating device, and either is currently using a device or did not have a device recommended. This code involves face-to-face involvement of the practitioner (typically a speech and language pathologist experienced in the use of these devices) with the patient. The work RVUs for this new code will be 75 percent of the value for CPT code 92597, reflecting that it is likely to be less intensive than the initial evaluation. The malpractice and practice expense inputs are also crosswalked to CPT code 92957.

G0200 Evaluation of patient for prescription of voice prosthetic. This code describes the services to evaluate a patient for the use of a voice prosthetic device. This code involves face-to-face involvement of the practitioner (typically a speech and language pathologist experienced in the use of these devices) with the patient. The work and malpractice RVUs for this new code will be crosswalked to the ones used for CPT code 92597, the code it replaces. We will also crosswalk practice expense inputs to CPT code 92957.

G0201 Modification or training in use of voice prosthetic. This code involves the modification or training of a patient in the use of a voice prosthetic. This code involves face-to-face involvement of the practitioner (typically a speech and language pathologist experienced in the use of these devices) with the patient. The work and malpractice RVUs, as well as the practice expense inputs for this new code, will be crosswalked to the ones used for CPT code 92598, the code it replaces. The RUC recommendations, as well as the revised CPEP data for all codes, can be found on our homepage. See the **SUPPLEMENTARY INFORMATION** section of this rule for instructions on accessing our website.

V. Physician Fee Schedule Update and Conversion Factor for Calendar Year 2001

The 2001 physician fee schedule conversion factor is $38.2581. The separate 2001 national average anesthesia conversion factor is $17.26.

The 2001 physician fee schedule update is 5.1 percent. However, miscellaneous adjustments will result in an increase in the conversion factor from 2000 to 2001 of 4.5 percent. The specific calculations to determine the physician fee schedule update and conversion factor for physicians' services for calendar year 2001 are explained below.

Detail on Calculation of the Calendar Year 2001 Physician Fee Schedule Update and the 2001 Conversion Factor

Physician Fee Schedule Update and Conversion Factor

The conversion factor is affected by section 1848(c)(2)(B)(ii)(II) of the Act, which requires that changes to the relative value units of the Medicare physician fee schedule not cause expenditures to increase or decrease by more than $20 million from the amount of expenditures that would have been made if such adjustments had not been made. We implement this requirement through a uniform budget-neutrality adjustment to the conversion factor. There are two changes that will require us to make an adjustment to the conversion factor to meet the budget neutrality requirements in section 1848(c)(2)(B)(ii)(II). We are making a 0.3 percent reduction (0.997) in the conversion factor to account for separate payment for certification and recertification of a plan of care for home health services. We are also making a 0.14 percent (0.9986) reduction in the conversion factor to account for an anticipated increase in the volume and intensity of services.

After considering this factor, as well as the percent change in the MEI, the update adjustment factor, and statutory adjustment described below, the 2001 conversion factor is calculated as follows:

2000 Conversion Factor—$36.6137
2001 Update—1.05163
2001 Legislative Adjustment—0.998
Volume and Intensity Adjustment—0.9986
Other Factors—0.997
2001 Conversion Factor—$38.2581

Under section 1848(d)(3) of the Act, the update is equal to the product of the MEI and the update adjustment factor. For 2001, the MEI is equal to 2.1 percent (1.021). A more detailed description of the MEI and its calculation follows. The update adjustment factor is equal to 3.0 percent (1.030). Thus, the product of the MEI (1.021) and the update adjustment factor (1.030) equal the 2001 update (1.05163). Section 1848(d)(4)(F) of the Act provides for an additional adjustment to the update for 2001 of −0.2 percent (0.998). Thus, taking into account the 2001 update, the 2001 legislative adjustment, the 2001 volume and intensity adjustment, and the adjustment for certification and recertification of a plan of care for home health services, the conversion factor for 2001 is determined as follows: $36.6137 × 1.05163 × 0.998 × 0.9986 × 0.997 = $38.2581.

The MEI and the update adjustment factor are described below.

The Percentage Change in the Medicare Economic Index

The MEI measures the weighted-average annual price change for various inputs needed to produce physicians' services. The MEI is a fixed-weight input price index, with an adjustment for the change in economy-wide labor productivity. This index, which has 1996 base weights, is comprised of two broad categories: Physician's own time and physician's practice expense.

The physician's own time component represents the net income portion of business receipts and primarily reflects the input of the physician's own time into the production of physicians' services in physicians' offices. This category consists of two subcomponents—wages and salaries, and fringe benefits. These components are adjusted by the 10-year moving average annual percent change in output per man-hour for the nonfarm business sector to account for productivity growth in the general economy.

The physician's practice expense category represents the rate of price growth in nonphysician inputs to the production of services in physicians' offices. This category consists of wages and salaries and fringe benefits for nonphysician staff and other nonlabor inputs. Like physician's own time, the nonphysician staff categories are adjusted for productivity using the 10-year moving average annual percent change in output per man-hour for the nonfarm business sector. The physician's practice expense component also includes the following categories of nonlabor inputs—office expense, medical materials and supplies, professional liability insurance, medical equipment, professional car, and other expense. The table below presents a listing of the MEI cost categories with associated weights and percent changes for price proxies for the 2001 update. The calendar year 2001 MEI is 2.1 percent.

INCREASE IN THE MEDICARE ECONOMIC INDEX UPDATE FOR CALENDAR YEAR 2001 [1]

Cost categories and price measures	1996 weights [2]	CY 2001 percent changes
Medicare Economic Index Total	100.0	2.1
1. Physician's Own Time [3 4]	54.5	1.7
a. Wages and Salaries: Average hourly earnings private nonfarm, net of productivity	44.2	1.6
b. Fringe Benefits: Employment Cost Index, Benefits, private nonfarm, net of productivity	10.3	2.4
2. Physician's Practice Expense [3]	45.5	2.5
a. Nonphysician Employee Compensation	16.8	1.8
1. Wages and Salaries: Employment Cost Index, wages and salaries, weighted by occupation, net of productivity	12.4	1.7
2. Fringe Benefits: Employment Cost Index, fringe benefits, white collar, net of productivity	4.4	2.6
b. Office Expense: Consumer Price Index for Urban Consumers (CPI–U), housing	11.6	2.5
c. Medical Materials and Supplies: Producer Price Index (PPI), ethical drugs/PPI, surgical appliances and supplies/CPI–U, medical equipment and supplies (equally weighted)	4.5	2.0
d. Professional Liability Insurance: HCFA professional liability insurance survey [5]	3.2	7.2
e. Medical Equipment: PPI, medical instruments and equipment.	1.9	−1.1
f. Other Professional Expense	7.6	2.8
1. Professional Car: CPI–U, private transportation	1.3	5.5
2. Other: CPI–U, all items less food and energy	6.3	2.1
Addendum:		
Productivity: 10-year moving average of output per man-hour, nonfarm business sector	n/a	1.9
Physician's Own Time, not productivity adjusted	54.5	3.7
Wages and salaries, not productivity adjusted	44.2	3.6
Fringe benefits, not productivity adjusted	10.3	4.4
Nonphysician Employee Compensation, not productivity adjusted	16.8	4.0
Wages and salaries, not productivity adjusted	12.4	3.9
Fringe benefits, not productivity adjusted	4.4	4.6

[1] The rates of historical change are for the 12-month period ending June 30, 2000, which is the period used for computing the calendar year 2001 update. The price proxy values are based upon the latest available Bureau of Labor Statistics data as of September 15, 2000.

[2] The weights shown for the MEI components are the 1996 base-year weights, which may not sum to subtotals or totals because of rounding. The MEI is a fixed-weight, Laspeyres-type input price index whose category weights indicate the distribution of expenditures among the inputs to physicians' services for calendar year 1996. To determine the MEI level for a given year, the price proxy level for each component is multiplied by its 1996 weight. The sum of these products (weights multiplied by the price index levels) over all cost categories yields the composite MEI level for a given year. The annual percent change in the MEI levels is an estimate of price change over time for a fixed market basket of inputs to physicians' services.

[3] The Physician's Own Time and Nonphysician Employee Compensation category price measures include an adjustment for productivity. The price measure for each category is divided by the 10-year moving average of output per man-hour in the nonfarm business sector. For example, the fringe benefits component of the Nonphysician Compensation category is calculated by dividing the rate of growth in the employment cost index-benefits for private, white collar workers by the 10-year moving average rate of growth of output per man-hour for the nonfarm business sector. Dividing one plus the decimal form of the percent change in the employment cost index-benefits (1+.046=1.046) by one plus the decimal form of the percent change in the 10-year moving average of labor productivity (1+.019=1.019) equals one plus the change in the employment cost index-benefits for white collar workers net of the change in output per manhour (1.046/1.019=1.026). All Physician's Own Time and Nonphysician Employee Compensation categories are adjusted in this way. Due to a higher level of precision the computer calculated quotient may differ from the quotient calculated from rounded individual percent changes.

[4] The average hourly earnings proxy, the Employment Cost Index proxies, as well as the CPI–U, housing and CPI–U, private transportation are published in the Current Labor Statistics Section of the Bureau of Labor Statistics' Monthly Labor Review. The remaining CPIs and PPIs in the revised index can be obtained from the Bureau of Labor Statistics' CPI Detailed Report or Producer Price Indexes.

[5] Derived from a HCFA survey of several major insurers (the latest available historical percent change data are for the period ending second quarter of 2000).

N/A Productivity is factored into the MEI compensation categories as an adjustment to the price variables; therefore, no explicit weight exists for productivity in the MEI.

The Update Adjustment Factor

Under sections 1848(d)(3) and (d)(4) of the Act, the physician fee schedule update is equal to the product of the Medicare Economic Index and an ''update adjustment factor.'' The update adjustment factor represents an amount that is applied to the inflation update to reflect success or failure in meeting the expenditure target that the law refers to as ''allowed expenditures.'' Allowed expenditures are equal to actual expenditures in a base period updated each year by the sustainable growth rate. The sustainable growth rate is a percentage increase that is determined by a formula specified in section 1848(f) of the Act. The next section describes the SGR and its calculation in detail. The update adjustment factor is determined based on a comparison of actual and allowed expenditures. For years beginning with 1999, the BBA required that the update adjustment factor be determined under section 1848(d)(3) of the Act to equal—

(i) the difference between—(I) the sum of the allowed expenditures for physicians' services (as determined under subparagraph (C)) for the period beginning April 1, 1997, and ending on March 31 of the year involved, and (II) the amount of actual expenditures for physicians' services furnished during the period beginning April 1, 1997, and ending on March 31 of the preceding year; divided by—

(ii) the actual expenditures for physicians' services for the 12-month period ending on March 31 of the preceding year, increased by the sustainable growth rate under subsection (f) for the fiscal year which begins during such 12-month period.

Pub. L. No. 106–113, the Medicare, Medicaid and State Children's Health Insurance Program Balanced Budget Refinement Act of 1999 (BBRA) made changes to the methodology for determining the physician fee schedule update beginning in 2001. In particular, it established that the methodology in section 1848(d)(3) of the Act would only be used for determining the physician fee schedule update for 1999 and 2000. The BBRA established that the physician fee schedule update for 2001 and subsequent years would be determined under section 1848(d)(4) of the Act. While the general principle of adjusting the inflation update (the MEI) by the update adjustment factor continues, the BBRA made fundamental changes to the calculation of the update adjustment factor. In general, these changes do two things. First, the measurement of actual expenditures will occur on the basis of a calendar year rather than an April 1 to March 31 year. This essentially conforms the measurement of actual expenditures with other aspects of the SGR system that are also occurring on the basis of a calendar year as a result of BBRA amendments. As we explained in our April 10, 2000 SGR final notice (65 FR 19000), the BBRA essentially changed the SGR system from one that spanned 3 different time periods, ((1) measurement of actual expenditures on the basis of an April 1 to March 31 period; (2) calculation of the SGR rate of increase on a federal fiscal year basis; and (3) application of the update on a calendar year basis) to one that spans only one time period. (All three are on the basis of a calendar year). Second, it ensures that any deviation between cumulative actual expenditures and cumulative allowed expenditures will be corrected over several years rather than in a single year. This will result in less year-to-year volatility in the physician fee schedule update than would occur if adjustments to the update are made to bring expenditures in line with the target in one year.

Under section 1848(d)(4)(A) of the Act, the physician fee schedule update for a year is equal to the product of—(1) 1 plus the Secretary's estimate of the percentage increase in the MEI for the year, and (2) 1 plus the Secretary's estimate of the update adjustment factor for the year. Under section 1848(d)(4)(B) of the Act, the update adjustment factor for a year beginning with 2001 is equal to the sum of the following:

(i) Prior Year Adjustment Component. An amount determined by:

(I) Computing the difference (which may be positive or negative) between the amount of the allowed expenditures for physicians' services for the prior year (the year prior to the year for which the update is being determined) and the amount of the actual expenditures for such services for that year;

(II) Dividing that difference by the amount of the actual expenditures for such services for that year; and

(III) Multiplying that quotient by 0.75.

(ii) Cumulative Adjustment Component. An amount determined by:

(I) Computing the difference (which may be positive or negative) between the amount of the allowed expenditures for physicians' services from April 1, 1996 through the end of the prior year and the amount of the actual expenditures for such services during that period;

(II) Dividing that difference by actual expenditures for such services for the prior year as increased by the sustainable growth rate for the year for which the update adjustment factor is to be determined; and

(III) Multiplying that quotient by 0.33.

Thus, the CY 2001 update adjustment factor will be determined as the sum of the following:

(i) Prior Year Adjustment Component. This equals the difference between allowed expenditures in 2000 and our current estimate of actual expenditures for 2000. This difference is divided by our current estimate of actual expenditures for 2000 and the quotient is multiplied by 0.75. Our current estimate of allowed expenditures for CY 2000 is $56.6 billion. Our current estimate of actual expenditures for all of 2000 based on claims received through June 30 is $55.1 billion. Thus, the prior year adjustment component is equal to:

$$((\$56.6 - \$55.1)/\$55.1)) \times 0.75 = .020$$

(ii) Cumulative Adjustment Component. This amount equals the difference between allowed expenditures for the period April 1, 1996 through December 31, 2000 ($244.4 billion) and actual expenditures for the same period ($240.6 billion) divided by the product of actual expenditures for the year 2000 ($55.1) increased by the SGR for 2001 (5.6 percent). This quotient is multiplied by 0.33. Thus, the cumulative adjustment component is equal to:

$$((\$244.4 - \$240.6)/(\$55.1 \times 1.056)) \times 0.33 = 0.022.$$

The prior year adjustment component and the cumulative adjustment component are added. Adding these figures together would make the update adjustment factor equal 0.042. However, section 1848(d)(4)(D) of the Act indicates that the update adjustment factor determined under section 1848(d)(4)(B) of the Act for a year may not be less than −0.07 or greater than 0.03. Since 0.042 exceeds 0.03, we are limiting the update adjustment factor consistent with section 1848(d)(4)(D) of the Act to 0.03. Section 1848(d)(4)(A)(ii) of the Act indicates that 1 should be added to the update adjustment factor determined under section 1848(d)(4)(B) of the Act. Thus, adding 1 to 0.03 makes the update adjustment factor equal 1.030.

(As indicated in the SGR discussion below, allowed expenditures through the end of CY 2000 will be revised one more time, no later than November 1, 2001. We will also be revising the measurement of actual expenditures for CY 2000 based on claims received through June 30, 2001. These revised figures will be determined no later than November 1, 2001. The SGR for 2001 will also be revised two more times. Any differences that result in the update adjustment factor for 2001 from revision of estimates will be reflected in update adjustment factor determined for 2002.)

VI. Allowed Expenditures for Physicians' Services and the Sustainable Growth Rate

A. Medicare Sustainable Growth Rate

Section 1848(f) of the Social Security Act (the Act), as amended by section 4503 of the Balanced Budget Act of 1997 (BBA) (Pub. L. 105–33), enacted on August 5, 1997, replaced the Medicare Volume Performance Standard (MVPS) with a Sustainable Growth Rate (SGR). Section 1848(f)(2) of the Act specifies the formula for establishing yearly SGR targets for physicians' services under Medicare. The use of SGR targets is intended to control the actual growth in aggregate Medicare expenditures for physicians' services.

The SGR targets are not limits on expenditures. Payments for services are not withheld if the SGR target is exceeded by actual expenditures. Rather, the appropriate fee schedule

update, as specified in section 1848(d)(3) of the Act, is adjusted to reflect the success or failure in meeting the SGR target. If expenditures exceed the target, the update is reduced. If expenditures are less than the target, the update is increased.

As with the MVPS, the statute specifies a formula to calculate the SGR based on our estimate of the change in each of four factors. The four factors for calculating the SGR are as follows:

(1) The estimated change in fees for physicians' services.

(2) The estimated change in the average number of Medicare fee-for-service beneficiaries.

(3) The estimated projected growth in real gross domestic product (GDP) per capita.

(4) The estimated change in expenditures due to changes in law or regulations.

Section 211 of the BBRA amended sections 1848(d) and 1848(f) of the Act with respect to the physician fee schedule update and the SGR. Section 211(b) of the BBRA maintains the formula for calculating the SGR, but amends section 1848(f)(2) of the Act to apply the SGR on a calendar year (CY) basis beginning with 2000 while maintaining the SGR on a fiscal year (FY) basis for FY 1998 through FY 2000. Specifically, section 1848(f)(2) of the Act, as amended by section 211(b) of the BBRA, states that—''* * * [t]he sustainable growth rate for all physicians' services for a fiscal year (beginning with fiscal 1998 and ending with fiscal year 2000) and a year beginning with 2000 shall be equal to the product of:

(1) 1 plus the Secretary's estimate of the weighted average percentage increase (divided by 100) in the fees for all physicians' services in the applicable period involved,

(2) 1 plus the Secretary's estimate of the percentage change (divided by 100) in the average number of individuals enrolled under this part (other than Medicare+Choice plan enrollees) from the previous applicable period to the applicable period involved,

(3) 1 plus the Secretary's estimate of the projected percentage growth in real gross domestic product per capita (divided by 100) from the previous applicable period to the applicable period involved; and

(4) 1 plus the Secretary's estimate of the percentage change (divided by 100) in expenditures for all physicians' services in the applicable period (compared with the previous applicable period) which will result from changes in law and regulations, determined without taking into account estimated changes in expenditures resulting from the update adjustment factor determined under section 1834 (d)(3)(B) or (d)(4)(B) of the Act, as the case may be, minus 1 and multiplied by 100.''

Under section 1848(f)(4)(C) of the Act, as added by section 211(b)(3) of the BBRA, the term ''applicable period'' means—(1) a FY, in the case of FY 1998, FY 1999 and FY 2000, and (2) a CY with respect to a year beginning with 2000.

To make the transition from a FY SGR to a CY SGR in 1999 using the FY 2000 SGR, sections 211(b)(2) and (b)(3) of the BBRA require us to calculate SGRs for both FY and CY 2000. Section 1848(d)(4)(C) of the Act, as modified by section 211(a)(1)(B) of the BBRA, required us to determine the allowed expenditures for both the 9-month period beginning April 1, 1999 and for CY 1999. The SGR for CY 2000 is then applied to allowed expenditures for CY 1999.

As stated in the April 10 final notice (65 FR 19002), the BBRA requires the estimate of the FY 2000 and CY 2000 SGR to be revised based on more recent data, but, as explained below, the BBRA does not provide for revision of either the FY 1998 or the FY 1999 SGR. This means that, for the transition to a calendar year SGR system, allowed expenditures for the period April 1, 1999 through December 31, 1999 (determined by applying the FY 2000 SGR to allowed expenditures for the 12-month period ending March 31, 1999) are subject to change based on revision of the FY 2000 SGR; allowed expenditures for the period January 1, 1999 through March 31, 1999 (determined using the FY 1999 SGR) are not subject to revision.

In general, the BBRA requires us to publish SGRs for three different time periods, no later than November 1 of each year, using the best data available as of September 1 of each year. Under section 1848(f)(3)(C)(i) of the Act, as added by section 211(b)(5) of the BBRA, the SGR is estimated and subsequently revised twice (beginning with the FY and CY 2000 SGRs) based on later data. Under section 1848(f)(3)(C)(ii) of the Act, there are no further revisions to the SGR once it has been estimated and subsequently revised in each of the 2 years following the initial estimate.

The requirement of revisions to the SGR based on later data means that we will estimate and publish an SGR for the upcoming year, the contemporaneous year, and the preceding year by not later than November 1 of each year. For example, by not later than November 1, 2002, we will publish an estimate of the SGR for CY 2003, a revision of the CY 2002 SGR estimated in the previous year, and a revision of the CY 2001 SGR first estimated two years earlier and first revised in the previous year. Under section 1848(f)(3)(C)(ii) of the Act, this would be the final revision to the CY 2001 SGR.

Sections 1848(f)(3)(A) and (f)(3)(B) of the Act, as added by section 211(b)(5) of the BBRA, specify special rules with respect to the SGR and the CY 2001 and CY 2002 updates. Section 1848(f)(3)(A) of the Act requires us, not later than November 1, 2000, to revise the SGRs for FY 2000 and CY 2000 and to establish the SGR for CY 2001, based on the best data available, as of September 1, 2000. Section 1848(f)(3)(B) of the Act requires us, by not later than November 1, 2001, to revise the SGRs for FY 2000 and CYs 2000 and 2001 and to establish the SGR for CY 2002, based on the best data available as of September 1, 2001. In accordance with section 1848(f)(3)(C)(ii) of the Act, there will be no further revisions to the FY 2000 and CY 2000 SGRs after their revision in the 2001 notice.

Physicians' Services

Section 1848(f)(4)(A) of the Act defines the scope of physicians' services covered by the SGR. The BBRA made no changes to this definition that was also used for the MVPS. For this reason, we are continuing to use the same definition of physicians' services for the SGR in this notice as we did in prior SGR notices and for the MVPS published in the **Federal Register** (61 FR 59717) on November 22, 1996.

C. Provisions Related to the SGR

We are implementing section 211(b)(1)(A) of the BBRA that requires us to publish in the **Federal Register**, not later than November 1, 2000, a notice containing—(1) a preliminary estimate of the SGR for 2001; and (2) a revised estimate of the CY 2000 SGR. In addition, consistent with section 1848(f)(3)(A) of the Act, we are revising the SGR for FY 2000 for purposes of determining the physician fee schedule update for 2001 under section 1848(d)(4)(B) of the Act.

In general, the update for a year is based on the Medicare Economic Index (MEI) as adjusted, within bounds, by the amount of actual expenditures for physicians' services compared to allowed (that is, growth target) expenditures. A key difference between the MVPS and the SGR is that the comparison of actual and allowed expenditures is made on a cumulative basis under the SGR, while it was made on an annual basis under the MVPS. The ''update adjustment factor'' in section 1848(d)(4)(B) of the Act is an

adjustment to the MEI that reflects the difference between actual expenditures and target expenditures.

Section 1848(d)(3)(C) of the Act, as modified by the BBA, defines allowed expenditures for the 12-month period ending March 31, 1997 as equal to actual expenditures for physicians' services during that period (that is, April 1, 1996 through March 31, 1997), as we have estimated. Section 1848(d)(3)(C) of the Act defines allowed expenditures for subsequent 12-month periods to be equal to allowed expenditures for physicians' services for the previous year increased by the SGR for the FY which begins during the 12-month period. For example, allowed expenditures for the 12-month period April 1, 1997 through March 31, 1998 are equal to allowed expenditures for the 12-months ending March 31, 1997, increased by the SGR for FY 1998. As explained above, BBRA subsequently provided for a transition to a calendar year SGR system in 1999 with allowed expenditures in 2000 equal to 1999 allowed expenditures increased by the 2000 SGR. Allowed expenditures for each subsequent year will equal expenditures from the prior year updated by the SGR.

The following table shows annual and cumulative allowed expenditures for physicians' services from April 1, 1996 through December 31, 2001.

Period	Annual allowed expenditures	Cumulative allowed expenditures	FY or CY SGR
4/1/96–3/31/97	$48.9 billion	$48.9 billion	N/A.
4/1/97–3/31/98	$49.6 billion	$98.5 billion	FY 1998=1.5%.
4/1/98–3/31/99	$49.4 billion	$147.9 billion	FY 1999=-0.3%.
1/1/99–3/31/99	$12.5 billion..		
4/1/99–12/31/00	$39.5 billion	$187.9 billion	FY 2000=7.9%.
1/1/99–12/31/99	$52.4 billion	Included in $187.9 billion above	See Note.
1/1/00–12/31/00	$56.6 billion	$244.4 billion	CY 2000=8.1%.
1/1/01–12/31/01	$59.8 billion	$304.2 billion	CY 2001=5.6%.

Note: Allowed expenditures for the first quarter of 1999 are based on the FY 1999 SGR and allowed expenditures for the last three quarters of 1999 are based on the FY 2000 SGR.

In the above table, for the period April 1996 through March 1997, annual allowed expenditures are equal to actual expenditures for the period. Annual allowed expenditures for each subsequent year are equal to the figure from the prior April 1 through March 31 12-month period (shown in the annual allowed expenditure column) multiplied by the SGR figure one row down in the right hand column. For example, allowed expenditures from April 1997 through March 1998 are equal to $48.9 multiplied by 1.015. Cumulative allowed expenditures in a year are equal to the sum of the annual allowed expenditures figure in the same row and annual allowed expenditures for all prior years. The transition to the calendar SGR occurs in 1999. Our current estimates of the FY 2000 SGR of 7.9 percent (2.1 percent for factor 1, 0.8 percent for factor 2, 4.5 percent for factor 3 and 0.3 percent for factor 4), the CY 2000 SGR of 8.1 percent (2.1 percent for factor 1, 1.0 percent for factor 2, 4.3 percent for factor 3, and 0.5 percent for factor 4) and the CY 2001 SGR (1.9 percent for factor 1, 0.9 percent for factor 2, 2.7 percent for factor 3 and 0.0 percent for factor 4) are described in more detail below. All estimates are based on the best data available to the Secretary as of September 1.

Allowed expenditures for the April 1, 1999 through the December 31, 1999 period are based on the FY 2000 SGR. As previously discussed, section 1848(f)(3) of the Act requires two revisions to the FY 2000 SGR. The first revision must be made not later than November 1, 2000 based on the best data available as of September 1, 2000; the second revision must be made not later than November 1, 2001, based on the best data available as of September 1, 2001. The allowed expenditures figure in the above table for the April 1, 1999 through the December 31, 1999 period reflects the revisions of the FY 2000 SGR contained in this notice. Similarly, the allowed expenditure figure for 2000 reflects our current estimate of the SGR for 2000. Both figures will be revised for the final time not later than November 1, 2001.

As we explained in our April 10, 2000 SGR notice (65 FR 19002), section 1848(d)(4)(C)(ii)(II) of the Act, as added by section 211(a)(1)(B) of the BBRA, specifies that allowed expenditures for the year of 1999 must be our estimate of the amount of the allowed expenditures that would be permitted under section 1848(d)(3)(C) of the Act for that year. We are, therefore, calculating allowed expenditures for CY 1999 as the sum of allowed expenditures for—(1) The January 1, 1999 through March 31, 1999 period; and (2) allowed expenditures for the April 1, 1999 through December 31, 1999 period.

Annual allowed expenditures for the period April 1, 1998 through March 31, 1999 are $49.4 billion. Our actuarial estimate of allowed expenditures for the 3-month period January 1, 1999 through March 31, 1999 is $12.5 billion that was determined by updating quarterly allowed expenditures included in the January 1, 1997 through March 31, 1997 period by the SGRs for FY 1998, FY 1999 and FY 2000. Adding this figure to the $39.9 billion figure for April 1, 1999 through December 31, 1999 equals allowed expenditures for 1999 of $52.4 billion. (Due to rounding, the figures may not add precisely to the total for 2000.)

Allowed expenditures for the period April 1, 1998 through March 30, 1999 are equal to allowed expenditures for the previous 12-month period increased by the FY 1999 SGR. As discussed in the April 10, 2000 SGR final notice (65 FR 19001), because there is no provision in the Act for revising the FY 1999 SGR or, consequently, the allowed expenditures for the April 1, 1998 through March 31, 1999 period, we are not revising the January 1, 1999 through March 31, 1999 portion of allowed expenditures included in the 1999 allowed expenditures. Thus, allowed expenditures for the January 1, 1999 to March 31, 1999 period are the same as those included in our April 10, 2000 final notice (65 FR 19002). However, as indicated above, revisions to the FY 2000 SGR contained in this notice result in an increase in our earlier estimates of allowed expenditures for April 1, 1999 through December 31, 1999 and, hence, allowed expenditures for 1999.

D. Preliminary Estimate of the SGR for CY 2001

According to sections 1848(f)(2)(A) through (f)(2)(D) of the Act, as amended by section 211(b) of the BBRA, we have determined the preliminary estimate of the CY 2001 SGR to be 5.6 percent. Our determination is based on estimates of the following four statutory factors as indicated in the table below:

Statutory factors	April 10 estimate	Current estimate
Fees	1.5	1.9
Enrollment	−0.6	0.9
Real Per Capita GDP	1.9	2.7
Law and Regulation	0.0	−0.0
Total	2.8	5.6

(Note: Consistent with section 1848(f)(2) of the Act, the statutory factors are multiplied, not added, to produce the total (that is, $1.019 \times 0.991 \times 1.027 \times 1.000 = 1.056$.) A more detailed explanation of each figure is provided below.

E. Sustainable Growth Rate for CY 2000

According to sections 1848(f)(2)(A) through (f)(2)(D) of the Act, as amended by section 211(b) of the BBRA, our current estimate of the CY 2000 SGR is 8.1 percent. This compares to an estimate of 5.8 percent included in our April 10, 2000 notice (65 FR 19003). The table below shows our April 10 and current estimates of the four statutory factors that determine the CY 2000 SGR:

Statutory factors	April 10 estimate	Current estimate
Fees	2.1	2.1
Enrollment	−0.6	1.0
Real Per Capita GDP	2.5	4.3
Law and Regulation	1.7	0.5
Total	5.8	8.1

A more detailed explanation of each figure is provided below.

F. Sustainable Growth Rate for FY 2000

According to sections 1848(f)(2)(A) through (f)(2)(D) of the Act, as amended by section 211(b) of the BBRA, our current estimate of the FY 2000 SGR is 7.9 percent. This is in comparison to an estimate of 2.1 percent included in our October 1, 1999 notice (64 FR 53394). At the time of the April 10, 2000 final (SGR) notice, we estimated the SGR for FY 2000 would be 5.7 percent. The table below shows our October 1, 1999 and current estimates of the four statutory factors that determine the FY 2000 SGR:

Statutory factors	April 10 estimate	Current estimate
Fees	2.1	2.1
Enrollment	−0.4	0.8
Real Per Capita GDP	2.7	4.5
Law and Regulation	1.2	0.3
Total	5.7	7.9

A more detailed explanation of each figure is provided below.

G. Calculation of the FY 2000 CY 2000 and CY 2001 Sustainable Growth Rate

1. Detail on the CY 2001 SGR

A more detailed discussion of our preliminary estimates of the four elements of the 2001 SGR follows.

Factor 1—Changes in Fees for Physicians' Services (Before Applying Legislative Adjustments) for CY 2001

This factor was calculated as a weighted average of the CY 2001 fee increases that apply for the different types of services included in the definition of physicians' services for the SGR.

Physicians' services represent approximately 89 percent of allowed charges for physicians' services under the SGR and are updated by the Medicare Economic Index (MEI). Our current estimate of the MEI for 2001 is 2.1 percent. Diagnostic laboratory tests represent approximately 11 percent of the Medicare allowed charges for physicians' services under the SGR. The BBA provided for a 0.0 percent update for CY 2001 for laboratory services. The table below shows both the physicians' and laboratory service updates that were used to determine the percentage increase in physicians' fees for CY 2001.

	Weight	Update
Physician	.89	2.1
Laboratory	.11	0.0
Weighted Average	1.0	1.9

After taking into account the elements described in the table, we estimate that the weighted-average increase in fees for CY 2001 for physicians' services under the SGR (before applying any legislative adjustments) will be 1.9 percent.

Factor 2—The Percentage Change in the Average Number of Part B Enrollees from CY 2000 to CY 2001

This factor is our estimate of the percent change in the average number of fee-for-service enrollees for CY 2001 as compared to CY 2000. Medicare+Choice (M+C) plan enrollees, whose Medicare-covered medical care is outside the scope of the SGR, are excluded from this estimate. Our actuaries estimate that the average number of Medicare Part B fee-for-service enrollees (excluding beneficiaries enrolled in M+C plans) will increase by 0.9 percent in calendar year 2001. This estimate was derived by subtracting estimated M+C enrollment from estimated overall Medicare enrollment as illustrated in the table below.

	2000	2001
Overall	37.476 million.	37.824 million.
Medicare+Choice	6.303 million	6.382 million.
Net	31.174 million.	31.442 million.
Percent Increase	.....	0.9 percent.

In our April 10 final notice (65 FR 19005), we indicated that the enrollment factor is one of two elements of the SGR upon which there has been the largest difference between our actuaries' estimates and the actual percentage change in the factor. At this time, our actuary has no information on actual enrollment in M+C organizations for 2001. While we do receive information on whether a M+C Plan will continue to participate or withdraw from the program in 2001, it remains difficult to estimate the number of beneficiaries that will select a M+C plan or fee-for-service before the start of the calendar year. While some managed care organizations will no longer offer a M+C plan, other plans are available as an option to most beneficiaries in areas where there have been plan withdrawals. We have considered this issue in developing our 2001 M+C enrollment estimate. While there have been plan withdrawals the past three years, we have continued to observe increased enrollments. For 2001, we considered the issue of plan withdrawals and are forecasting a smaller increase than in prior years. Since beneficiaries have the option of moving between the fee-for-service and M+C sectors on a monthly basis, there may be movement during the year between the fee-for-service and M+C programs. This is another factor that contributes to the difficulty of estimating the size of the M+C enrollee population prior to the start of a calendar year. Since the fee-for-service enrollment figure is determined net of the change in M+C enrollment, it makes early estimates of this factor difficult. We would further point out that our estimate of this factor will have little bearing on the estimate of the update adjustment factor for 2001; it has no impact since the update adjustment is already at its limit. Since the law requires revisions of the estimates used in setting the SGR, we will have information on actual enrollment in M+C plans for the first eight months of

2001, and will be better able to predict the change in fee-for-service enrollment for the year by the time we determine the 2002 physician fee schedule. Thus, our estimate of the increase in fee-for-service enrollment contained in this final rule has no affect on the 2001 physician fee schedule update and will reflect later estimates based largely on actual information for the period by the time we set the 2002 physician fee schedule update.

Factor 3—Estimated Real Gross Domestic Product Per Capita Growth in CY 2001

Section 1848(f)(2)(C) of the Act, as amended by section 211 of the BBRA, requires us to estimate growth in real GDP per capita. This factor is applied on a CY basis beginning with the CY 2000 SGR. We estimate that the growth in real GDP will be 2.7 percent in CY 2001. Our past experience indicates that there have also been large changes in estimates of real per capita GDP growth and the actual change in this factor. Again, we note that we will use revised estimates of real per capita GDP growth in setting future year updates.

Factor 4—Percentage Change in Expenditures for Physicians' Services Resulting From Changes in Law or Regulations in CY 2001 Compared With CY 2000

There are no statutory or regulatory provisions that will affect expenditures in CY 2001 relative to CY 2000. The percentage change in expenditures for physicians' services resulting from changes in law or regulations is estimated to be 0.0 percent for 2001.

2. Detail on Calculation of the FY 2000 and CY 2000 SGRs

A more detailed discussion of our revised estimates of the four elements of the FY 2000 and CY 2000 SGR follows.

Factor 1—Changes in Fees for Physicians' Services (Before Applying Legislative Adjustments) for FY 2000 SGR and CY 2000 SGR.

We are continuing to use 2.1 percent for this element of the SGR for the FY 2000 SGR and the CY 2000 SGR. This factor is unchanged from earlier estimates previously described respectively for FY 2000 and CY 2000 in the October 1, 1999 **Federal Register** (65 FR 53395) and the April 10, 2000 **Federal Register** (65 FR 19003).

Factor 2—The Percentage Change in the Average Number of Part B Enrollees for the FY 2000 SGR and CY 2000 SGR.

This factor is our estimate of the percent change in the average number of fee-for-service enrollees for FY 2000 as compared to FY 1999 and CY 2000 as compared to CY 1999. As we indicated above, this factor is difficult to estimate prior to the beginning of the period for which the estimates are being made because of the interaction of the fee-for-service and M+C program and the lack of availability of actual data on beneficiary selection of M+C enrollment. We currently have such information on actual enrollment in the M+C program for FY 2000 and CY 2000 that permits estimates of the change in fee-for-service enrollment for these years that will be more reflective of the final actual change. The estimates for FY 2000 and CY 2000 were derived by subtracting estimated M+C enrollment from estimated overall Medicare enrollment as illustrated in the tables below.

	1999	2000
Overall	37.055 million.	37.746 million.
Medicare+Choice	6.191 million	6.303 million.
Net	30.864 million.	31.174 million.
Percent Increase		1.0 percent.

Our actuaries' estimate of the percent change in the average number of fee-for-service enrollees, net of M+C enrollment for 2000 compared to 1999 (0.8 percent for fiscal year 2000, and 1.0 percent for calendar year 2000) is greater than earlier estimates of this factor (−4.3 percent for FY 2000 and −0.6 percent for CY 2000). This is because the historical base from which our actuarial estimate is made has changed (that is, we have more information on actual enrollment in M+C plans from CY 1999 and CY 2000 that affects our estimates for these and future years).

Factor 3—Estimated Real Gross Domestic Product Per Capita Growth in FY 2000 and CY 2000

In the FY 2000 SGR notice published on October 1, 1999 (64 FR 53396), we estimated that real GDP growth per capita for FY 2000 would be 1.8 percent. In our April 10, 2000 SGR notice, we estimated that real per capita GDP growth for CY 2000 would be 2.5 percent. We are now estimating real GDP growth per capita to be 4.5 percent for FY 2000 and 4.3 percent for CY 2000. As we explained in our April 10, 2000 SGR notice (65 FR 19004), the higher estimate of the FY 2000 SGR is due in part to Bureau of Economic Analysis (BEA) revisions to the historical National Income and Product Accounts (NIPA) and in part due to a change in the outlook for growth in 2000. The historical revisions, released by BEA on October 29, 1999, raised historical real GDP per capita growth by 0.2 percentage points on average between 1959 and 1998, with larger differences in recent years. (For detailed description of changes to NIPA, see Brent R. Moulton, Robert P. Parker, and Eugene P. Seskin, ''A Preview of the 1999 Comprehensive Revision of the National Income and Product Accounts,'' Survey of Current Business (August, 1999): 7–20.) Subsequently, the projections of growth in real GDP per capita for FY 2000 have been revised upwards to reflect these revisions. Also, projections of real GDP per capita in 2000 (both FY and CY) have been revised upward to reflect stronger than expected stock market performance and less than expected buildup of inventories in preparation for Y2K in 1999.

Factor 4—Percentage Change in Expenditures for Physicians' Services Resulting From Changes in Law or Regulations in FY 2000 Compared With FY 1999 and CY 2000 Compared With CY 1999

As we explained in our October 1, 1999 and April 10, 2000 SGR notices, legislative changes contained in the BBA and the BBRA will have an impact on expenditures for physicians' services under the SGR in FY 2000 and CY 2000. Section 4103 of the BBA mandates a new prostate screening benefit effective January 1, 2000. We originally did not include any costs associated with the prostate screening benefit in our FY 2000 SGR notice published on August 1, 1999 (64 FR 53394). In the CY 2000 SGR notice published on April 10, 2000 (65 FR 19004), we indicated that inclusion of the prostate screening benefit would increase the FY 2000 SGR by 1.4 percentage points. We inadvertently included both the estimated physician and hospital expenditures associated with the prostate screening benefit in this figure while only Part B physician expenditures should be included in the SGR. In the April 10, 2000 SGR notice, we estimated that factor 4 would be 1.2 percentage points for the FY 2000 SGR and 1.7 percentage points for the CY 2000 SGR. The corresponding figures are now 0.3 percent for FY 2000 and 0.5 percent for CY 2000. The correction of the prostate screening benefit largely explains the reduction in this factor from our April 10, 2000 notice. We also incorporated a higher price for the prostate screening test itself that has the effect of slightly increasing this component of the FY and CY 2000 SGR. Other factors that affect the FY 2000 and

CY 2000 SGR are the elimination of the requirement that subluxation of the spine be demonstrated by an x-ray before a beneficiary can receive Medicare coverage for chiropractic services. This provision is resulting in a small increase in expenditures in FY 2000 and CY 2000. The impact of BBA Medicare Secondary Payer provisions will have marginal impact on reducing expenditures in FY 2000 and CY 2000.

Certain BBRA provisions also have a small impact on expenditures in FY 2000 and CY 2000. Section 224 of the BBRA increases payments for pap smears and is slightly increasing expenditures. Section 221 of the BBRA postponed the implementation of payment caps on physical and occupational therapy and speech-language pathology services. The effect of this provision on physicians and independent practitioners is resulting in a small increase in expenditures for these years. There is no effect on the SGR of provisions related to the technical component of a physician pathology service or the use of modifier 25. We are not implementing the proposed policy related to modifier 25, and the savings associated with the technical component of a physician pathology service are not large enough to affect calculation of the FY 2001 SGR.

After taking into account these provisions, the percentage change in expenditures for physicians' services resulting from changes in law or regulations is estimated to be 0.3 percent for FY 2000 and 0.5 percent for CY 2000.

VII. Provisions of the Final Rule

The provisions of this final rule restate the provisions of the July 2000 proposed rule, except as noted elsewhere in the preamble. Following is a highlight of the changes made from the proposed rule:

For changes related to the Geographic Practice Cost Index (GPCI), we made no changes in the 2002 and 2001 GPCIs from those proposed in the July 2000 proposed rule except to correct the Kansas malpractice GPCI. Since the revised GPCIs could not result in total payments either greater or lesser than payments that would have been made if GPCIs were not revised, it was necessary to adjust the GPCIs for budget neutrality as required by law. Therefore, we adjusted the 2001 through 2002 GPCIs as follows—work by 0.99699; practice expense by 0.99235; and malpractice by 1.00215.

For malpractice RVUs, new malpractice RVUs, based on the more recent 1996 through 1998 premium data, will become effective January 1, 2001. These malpractice RVUs will be considered interim for 2001 and subject to comment and possible revision in 2002.

We are not finalizing our proposal relating to global period for insertion, removal, and replacement of pacemakers and cardioverter defibrillators, because we believe that physicians have raised valid concerns that the adjustment to the work RVUs in the proposed rule may result in an underpayment for the service. Until we review this issue further, we are continuing with current pricing for these services and the use of the 90-day global period.

For our proposal relating to low intensity ultrasound, we are assigning .62 work RVUs and .04 malpractice RVUs to CPT code 20979 (which are the values also used for CPT code 20974). To determine the practice expense RVUs, we are applying direct inputs of technician time of 45 minutes and an exam table and minimum supply package. Since the publication of the July 2000 proposed rule, a national coverage decision has been made stating that low intensity ultrasound will be covered by Medicare as a treatment modality for nonunion of extremity fractures beginning April 1, 2001.

For our proposal concerning observation care codes CPT 99234 through 99236, we are not adjusting the work RVUs as proposed. We are maintaining the current work RVUs and clarifying the policies to be followed for the use of these codes.

VIII. Collection of Information Requirements

This document does not impose information collection and recordkeeping requirements. Consequently, it need not be reviewed by the Office of Management and Budget under the authority of the Paperwork Reduction Act of 1995.

IX. Response to Comments

Because of the large number of items of correspondence we normally receive on **Federal Register** documents published for comment, we are not able to acknowledge or respond to them individually. We will consider all comments we receive by the date and time specified in the ''DATES'' section of this preamble, and, if we proceed with a subsequent document, we will respond to the comments in the preamble to that document.

X. Regulatory Impact Analysis

We have examined the impacts of this final rule as required by Executive Order 12866, the Unfunded Mandates Reform Act of 1995 (UMRA) (Pub. L. 104–4), the Regulatory Flexibility Act of 1980 (RFA) (Pub. L. 96–354), and Executive Order 13132 of August 4, 1999 (Federalism).

EO 12866 directs agencies to assess costs and benefits of available regulatory alternatives and, when regulation is necessary, to select regulatory approaches that maximize net benefits (including potential economic, environmental, public health and safety effects, distributive impacts, and equity). A regulatory impact analysis (RIA) must be prepared for major rules with economically significant effects ($100 million or more annually). In the proposed rule impact analysis, we indicated that the rule would not be a major rule because it would not increase or decrease expenditures to a physician specialty or geographic area by more than $100 million. While the changes in the Medicare physician fee schedule are for the most part, budget neutral, they do involve redistribution of Medicare spending among procedures and physician specialties and geographic areas. The redistributive effect of this rule on any particular specialty or geographic area is, in our estimate, likely to exceed $100 million for at least one physician specialty. For this reason, we are considering this to be a major rule. The GPCI changes are expected to increase payments by less than $10 million in one locality and decrease payments by about $20 million in another locality. The effect on all other payment localities is likely to be less than these amounts.

The UMRA also requires (in section 202) that agencies prepare an assessment of anticipated costs and benefits before developing any rule that may result in expenditure in any one year by State, local, or tribal governments, in the aggregate, or by the private sector, of $100 million or more. We have determined that this rule has no consequential effect on State, local, or tribal governments. We believe the private sector cost of this rule falls below the above-stated threshold as well.

The RFA requires that we analyze regulatory options for small businesses and other small entities. We prepare a Regulatory Flexibility Analysis unless we certify that a rule would not have a significant economic impact on a substantial number of small entities. The analysis must include a justification concerning the reason action is being taken, the kinds and number of small entities the rule affects, and an explanation of any meaningful options that achieve the objectives and lessen

significant adverse economic impact on the small entities.

In addition, section 1102(b) of the Act requires us to prepare a regulatory impact analysis if a rule may have a significant impact on the operations of a substantial number of small rural hospitals. This analysis must conform to the provisions of section 604 of the RFA. For purposes of section 1102(b) of the Act, we define a small rural hospital as a hospital that is located outside of a Metropolitan Statistical Area and has fewer than 50 beds.

For purposes of the RFA, all physicians are considered to be small entities. There are about 700,000 physicians and other practitioners who receive Medicare payment under the physician fee schedule.

For the purpose of EO 12866 and the RFA we have prepared the following analysis, which, together with the rest of this preamble, meets all four assessment requirements. It explains the rationale for and purpose of the rule, details the costs and benefits of the rule, analyzes alternatives, and presents the measures we considered to minimize the burden on small entities.

A. Resource-Based Practice Expense Relative Value Units

Revisions in resource-based practice expense RVUs for physicians' services are calculated to be budget neutral, that is, the total practice expense RVUs for calendar year 2001 are calculated to be the same as the total practice expense RVUs that we estimate would have occurred without the changes in this regulation. This also means that increases in practice expense RVUs for some services will necessarily be offset by corresponding decreases in values for other services.

The following table shows the impact on total allowed charges by specialty of this rule's practice expense changes. In addition to the provisions of the rule, this table incorporates any impacts that result from using 1999 utilization data and other changes that we have made to practice expense inputs. The column labeled ''Year 2001–2002 Impact'' shows the impact on the fully implemented practice expense RVUs of changes resulting from this final rule. The column labeled ''Year 2001'' impact reflects only the 2001 portion of the changes from ''Year 2001–2002 Impact'' column. The difference between the two columns reflects the effect of the transition to fully implemented practice expense RVUs. That is, the impact in the 2001 column will reflect 75 percent of the impact on the fully implemented RVUs. These impacts are in addition to the impacts announced in previous rules related to the adoption of resource-based practice relative value units.

IMPACT OF PRACTICE EXPENSE CHANGES, TRANSITION, AND 2001–2002 IMPACT

Specialty	Allowed charges (billions $)	Year 2001 impact %	2001–2002 impact %
Anesthesiology	1.5	−1	−1
Cardiac Surgery	0.3	−1	−2
Cardiology	4.1	−1	−1
Chiropractor	0.4	1	1
Clinics	1.5	0	0
Dermatology	1.4	−1	−2
Emergency Medicine	1.0	0	0
Family Practice	3.3	−2	−2
Gastroenterology	1.2	1	2
General Practice	1.0	−1	−2
General Surgery	1.9	0	0
Hematology Oncology	0.6	−2	−2
Internal Medicine	6.8	−1	−1
Nephrology	0.9	2	3
Neurology	0.8	0	0
Neurosurgery	0.3	−1	−1
Nonphysician Practitioner	1.1	1	2
Obstetrics/Gynecology	0.4	0	−1
Ophthalmology	3.7	0	0
Optometrist	0.5	−1	−2
Orthopedic Surgery	2.2	−1	−1
Other Physician	1.5	0	0
Otolaryngology	0.6	−2	−2
Pathology	0.6	−2	−3
Plastic Surgery	0.2	0	1
Podiatry	1.1	0	0
Psychiatry	1.0	1	1
Pulmonary	1.0	0	1
Radiation Oncology	0.7	0	0
Radiology	3.0	4	5
Rheumatology	0.3	−1	−1
Suppliers	0.5	−5	−6
Thoracic Surgery	0.5	−1	−1
Urology	1.3	0	0
Vascular Surgery	0.3	−1	−1

The following table shows the impact of this final rule compared to the proposed rule that was published on July 17. There are 3 major changes that occurred between the proposed and final rule that may have an impact on specialty level payments. First, we corrected an error in the practice expense methodology that affected physical and occupational therapy. We inadvertently used the incorrect practice expense per hour for physical and

occupational therapy in the proposed rule. This caused the nonphysician practitioner category to reflect a 4 percent increase in payments. The correct figure should have been 1 percent. Second, we are using 1999 utilization data. Use of the 1999 utilization data generally appears to have little impact on any particular specialty. It does result in a small reduction in payments for pathology and a somewhat larger reduction in payments for the supplier category. Third, we adopted the recommendations of the RUC and PEAC to make refinements to the practice expense inputs for office visits and office consultation services. This change will have the effect of reducing payments for specialties whose incomes are derived in large part from these services. We note that the table shows the impact of this rule only and does not incorporate practice expense changes from two final rules, November 2, 1998 (63 FR 58895) and November 2, 1999 (64 FR 59433), that resulted in large increases in payments for visit and consultation services provided in physicians' offices. Since the statute requires a transition to payments based on resource-based practice expense RVUs, the increase in payments for these services is occurring over a 4-year period. Payment for these services is continuing to increase under the transition to resource-based practice expense RVUs. However, it is increasing by a lesser amount than earlier anticipated.

IMPACT OF PRACTICE EXPENSE CHANGES OF THE FINAL RULE COMPARED TO THE PROPOSED RULE

Specialty	Allowed charges (billions $)	Proposed rule impact %	Final 2001–2002 impact %
Anesthesiology	1.5	−1	−1
Cardiac Surgery	0.3	−3	−2
Cardiology	3.9	0	−1
Chiropractor	0.4	1	1
Clinics	1.5	0	0
Dermatology	1.3	0	−2
Emergency Medicine	0.9	0	0
Family Practice	3.2	0	−2
Gastroenterology	1.1	2	2
General Practice	1.0	0	−2
General Surgery	1.9	−1	0
Hematology Oncology	0.6	−1	−2
Internal Medicine	6.7	0	−1
Nephrology	0.9	2	3
Neurology	0.8	0	0
Neurosurgery	0.3	−1	−1
Nonphysician Practitioner	0.9	4	2
Obstetrics/Gynecology	0.4	−1	−1
Ophthalmology	3.7	−1	0
Optometrist	0.5	−2	−2
Orthopedic Surgery	2.2	−1	−1
Other Physician	1.3	1	0
Otolaryngology	0.6	−1	−2
Pathology	0.6	−1	−3
Plastic Surgery	0.2	0	1
Podiatry	1.1	0	0
Psychiatry	1.1	−1	1
Pulmonary	1.0	0	1
Radiation Oncology	0.6	1	0
Radiology	2.9	3	5
Rheumatology	0.3	0	−1
Suppliers	0.5	−1	−6
Thoracic Surgery	0.5	−2	−1
Urology	1.3	0	0
Vascular Surgery	0.3	−1	−1

The following table titled Impact of this Final Rule on Payments for Selected Codes shows the percentage change in total payment (in 2001 physician fee schedule dollars) for selected high-volume procedures that result from practice expense and malpractice changes announced in this final rule. These tables reflect the impact of this final rule only on the fully implemented fee schedule amount. The payments in these columns are determined using a conversion factor $38.2581. The RVUs used for calculating payment in the ''old'' columns are from the November 2, 1999 final rule. The RVUs used in calculating payments in the ''new'' columns are from this final rule. By using the conversion factor of $38.2581 and the 2001 malpractice RVUs to calculate payments in both the ''old'' and ''new'' columns, the impact of changes in practice expense are illustrated. These tables do not show the actual impact on payment from 2000 to 2001 because they do not incorporate the effect of the transition or physician fee schedule update (that is, ''old'' and ''new'' payments both reflect use of the 2001 conversion factor).

IMPACT OF THIS FINAL RULE ONLY ON PAYMENT FOR SELECTED CODES

Procedure code		Description	Old facility	New facility	Percent change	Old nonfacility	New nonfacility	Percent change
11721		Debride nail, 6 or more	$30.22	$30.61	1	$41.32	$42.47	3
17000		Destroy benign/premal lesion	34.43	34.43	0	63.13	63.89	1
27130		Total hip replacement	1,487.09	1,502.78	1	NA	NA	NA
27236		Treat thigh fracture	1,135.88	1,153.10	2	NA	NA	NA
27244		Treat thigh fracture	1,157.31	1,177.58	2	NA	NA	NA
27447		Total knee replacement	1,556.72	1,570.88	1	NA	NA	NA
33533		CABG, arterial, single	1,904.49	1,859.73	−2	NA	NA	NA
35301		Rechanneling of artery	1,180.64	1,172.99	−1	NA	NA	NA
43239		Upper GI endoscopy, biopsy	143.85	157.24	9	283.11	298.03	5
45385		Lesion removal colonoscopy	283.49	299.94	6	478.99	502.33	5
66821		After cataract laser surgery	184.79	215.01	16	212.72	229.93	8
66984		Cataract surg w/iol, i stage	680.99	698.21	3	NA	NA	NA
67210		Treatment of retinal lesion	575.40	575.78	0	629.73	628.20	0
71010	26	Chest x-ray	9.18	9.56	4	9.18	9.56	4
71020	26	Chest x-ray	11.09	11.86	7	11.09	11.86	7
88305	26	Tissue exam by pathologist	42.47	42.08	−1	42.47	42.08	−1
90801		Psy dx interview	144.62	145.00	0	152.27	153.80	1
90806		Psytx, off, 45-50 min	97.56	96.41	−1	101.77	102.15	0
90807		Psytx, off, 45-50 min w/e&m	103.68	104.44	1	108.27	109.80	1
90862		Medication management	48.59	48.97	1	53.18	53.94	1
90921		ESRD related services, month	272.02	278.90	3	272.02	278.90	3
90935		Hemodialysis, one evaluation	63.13	77.66	23	NA	NA	NA
92004		Eye exam, new patient	91.44	92.58	1	130.46	131.23	1
92012		Eye exam established pat	37.88	37.88	0	66.19	66.19	0
92014		Eye exam & treatment	61.60	62.36	1	94.50	94.88	0
92980		Insert intracoronary stent	840.15	845.89	1	NA	NA	NA
92982		Coronary artery dilation	621.69	626.67	1	NA	NA	NA
93000		Electrocardiogram, complete	NA	NA	NA	27.55	27.55	0
93010		Electrocardiogram report	9.18	9.56	4	9.18	9.56	4
93015		Cardiovascular stress test	NA	NA	NA	109.04	108.65	0
93307	26	Echo exam of heart	50.88	51.27	1	50.88	51.27	1
93510	26	Left heart catheterization	244.47	246.38	1	244.47	246.38	1
98941		Chiropractic manipulation	32.14	32.52	1	36.73	37.49	2
99202		Office/outpatient visit, new	47.82	48.21	1	76.13	63.89	−16
99203		Office/outpatient visit, new	73.07	73.46	1	107.51	95.65	−11
99204		Office/outpatient visit, new	107.89	108.65	1	152.27	137.73	−10
99205		Office/outpatient visit, new	142.32	143.85	1	187.85	174.46	−7
99211		Office/outpatient visit, est	9.18	9.18	0	26.40	21.04	−20
99212		Office/outpatient visit, est	24.10	24.49	2	40.55	37.49	−8
99213		Office/outpatient visit, est	35.58	35.96	1	54.33	52.41	−4
99214		Office/outpatient visit, est	58.53	58.92	1	84.55	82.64	−2
99215		Office/outpatient visit, est	94.50	95.26	1	120.90	120.90	0
99221		Initial hospital care	68.10	68.86	1	NA	NA	NA
99222		Initial hospital care	113.24	114.01	1	NA	NA	NA
99223		Initial hospital care	157.62	159.15	1	NA	NA	NA
99231		Subsequent hospital care	34.05	34.43	1	NA	NA	NA
99232		Subsequent hospital care	55.86	56.24	1	NA	NA	NA
99233		Subsequent hospital care	79.58	80.34	1	NA	NA	NA
99236		Observ/hosp same date	202.39	194.34	4	NA	NA	NA
99238		Hospital discharge day	67.33	67.72	1	NA	NA	NA
99239		Hospital discharge day	91.82	92.58	1	NA	NA	NA
99241		Office consultation	34.43	34.81	1	63.89	48.97	−23
99242		Office consultation	70.78	71.54	1	106.74	91.05	−15
99243		Office consultation	94.11	95.26	1	134.67	120.90	−10
99244		Office consultation	138.88	140.79	1	185.17	171.78	−7
99245		Office consultation	184.40	186.70	1	232.99	223.04	−4
99251		Initial inpatient consult	37.88	38.26	1	NA	NA	NA
99252		Initial inpatient consult	74.99	75.37	1	NA	NA	NA
99253		Initial inpatient consult	101.77	102.15	0	NA	NA	NA
99254		Initial inpatient consult	145.00	146.15	1	NA	NA	NA
99255		Initial inpatient consult	198.94	200.47	1	NA	NA	NA
99261		Follow-up inpatient consult	24.49	24.87	2	NA	NA	NA
99262		Follow-up inpatient consult	47.44	47.82	1	NA	NA	NA
99263		Follow-up inpatient consult	69.63	70.01	1	NA	NA	NA
99282		Emergency dept visit	27.93	27.93	0	NA	NA	NA
99283		Emergency dept visit	62.74	62.74	0	NA	NA	NA
99284		Emergency dept visit	97.56	97.94	0	NA	NA	NA
99285		Emergency dept visit	152.65	153.03	0	NA	NA	NA
99291		Critical care, first hour	202.39	208.89	3	211.18	218.45	3
99292		Critical care, addl 30 min	101.00	104.06	3	108.27	111.71	3
99301		Nursing facility care	63.13	63.51	1	NA	NA	NA
99302		Nursing facility care	84.17	84.93	1	NA	NA	NA
99303		Nursing facility care	104.44	105.59	1	NA	NA	NA
99311		Nursing fac care, subseq	31.37	31.75	1	NA	NA	NA
99312		Nursing fac care, subseq	52.03	52.41	1	NA	NA	NA
99313		Nursing fac care, subseq	73.84	74.60	1	NA	NA	NA
99348		Home visit, est patient	69.63	70.01	1	75.75	77.28	2
99350		Home visit, est patient	161.83	164.13	1	171.78	176.37	3

B. Geographic Practice Cost Index Changes

Section 1848(e)(1)(A) of the Act requires that payments under the Medicare physician fee schedule vary among payment areas only to the extent that area costs vary as reflected by the area GPCIs. The GPCIs measure area cost differences in the three components of the physician fee schedule: Physician work, practice expenses (employee wages, rent, medical supplies, and equipment), and malpractice insurance. Section 1848(e)(1)(C) of the Act requires that the GPCIs be reviewed and, if necessary, revised at least every 3 years. The first GPCI revision was implemented in 1995. The second revision was implemented in 1998, and the next revision will be implemented in 2001. Section 1848(e)(1)(C) of the Act also requires that the GPCI revisions be phased in equally over a 2-year period if more than one year has elapsed since the last adjustment.

An estimate of the overall effects of proposed GPCI changes on fee schedule area payments can be demonstrated by a comparison of area geographic adjustment factors (GAFs). The GAFs are a weighted composite of each area's work, practice expense, and malpractice expense GPCIs using the national GPCI cost share weights. While we do not actually use the GAFs in computing the fee schedule payment for a specific service, they are useful in comparing overall area costs and payments. The actual effect on payment for any actual service will deviate from the GAF to the extent that the service's proportions of work, practice expense, and malpractice expense RVUs differ from those of the GAF. Addendum H shows the estimated effects of the revised GPCIs on area GAFs in descending order.

Only 14 of the 89 fee schedule areas will change by at least 2 percent. Only 16 areas will change by from 1 to 1.9 percent. The remaining 59 areas are estimated to experience payment changes of less than 1 percent under the revised GPCIs. These are very minor changes that would be expected in that we are revising only the rent indices, comprising 11.6 percent of the total GPCI, and the malpractice expense indices, comprising 3.2 percent of the GPCI. Thus, only about 15 percent of the GPCIs will be subject to change. The effects in the transition year 2001 will only be one-half of these amounts as the revised GPCIs will be phased in over a 2-year period as required by law.

C. Resource-Based Malpractice Relative Value Units

The malpractice RVUs in this final rule reflect the newer data and refinements made as a result of comments made on last year's rule. As we anticipated in the proposed rule, use of the updated data results in little impact on the specialty level payments. Tables showing the impacts can be found in the technical addendum at Addendum G. Of the 62 specialties shown, the overall median effect on specialty payments is 0.0 percent. The median impact on specialties whose payments are estimated to increase is +0.2 percent. The median impact on specialties whose payments are expected to decrease is -0.1 percent.

D. Critical Care Relative Value Units

As we explained in the preamble in the November 1999 final rule, we established interim work RVUs for 2000 for CPT codes 99291 and 99292 (critical care services). These RVUs were decreased in 2000 due to concerns about changes in the CPT definition for these services. In the proposed rule we indicated our intent to increase the work RVUs for critical care services and value the physician work at 4.0 RVUs for CPT code 99291 and 2.0 RVUs for CPT code 99292 because of changes that were made to the definition of critical care for 2001. The earlier reductions to the work RVUs were made assuming there would be a substitution of use of the critical care codes for other codes that would increase net payments if there were no reductions to the work RVUs. We do not believe this substitution will occur because of additional revisions to the definition of critical care for 2001. Thus net payments would decrease if we do not restore critical care RVUs to their former levels. For this reason we are finalizing our proposal and increasing the work RVUs to 4.0 RVUs for CPT code 99292.

E. Care Plan Oversight and Physician Certification/Recertification

We are establishing two new HCPCS codes for care plan oversight that are consistent with our coverage criteria. We are establishing two new HCPCS codes to describe the services involved in physician certification or recertification and development of a plan of care for a patient for whom the physician has prescribed Medicare-covered home health services. We are assuming there would be no additional cost or savings as a result of the two new HCPCS codes for care plan oversight. We are merely instituting these codes for consistency with our coverage criteria, and they would be used in place of the CPT codes when these services are provided.

In our proposed rule we indicated that new HCPCS codes are being established for physician certification or recertification and development of a plan of care. We stated that payment for these services is currently included in the payment for a variety of services such as E/M services that are provided independently to patients as part of a global surgical service. Under this proposal, we would instead pay separately for the certification and recertification of the plan of care for home health services. Since we are proposing to pay separately for a service that is currently included in our payment for other services, this proposal would increase Medicare expenditures for physicians' services without an adjustment to the physician fee schedule CF. For this reason, we proposed to adjust the physician fee schedule CF to ensure that Medicare payments for physicians' services do not increase as a result of this proposal.

Comment: We received several comments that objected to any budget neutrality adjustment related to the establishment of new codes related to certification and recertification of a plan of care for home health services. According to the AMA, the home health PPS rule published on July 3, 2000 indicates that we want more physician effort devoted to home health services, and not just a continuation of current efforts. The AMA stated that our home health PPS rule indicates an intent to focus on physician certification efforts and education ''in order to better involve the physician in the delivery of home health services.'' (65 FR 41127).

Response: Although we are establishing new codes to describe certification and recertification of a plan of care for home health services, we disagree that the establishment of these codes constitutes a new requirement to furnish a physicians' service as a condition of payment for home health services. We note that the proposed regulations applicable to home health services, published on October 10, 1999, would have modified 42 CFR section 424.22 to add a new paragraph (a)(1)(v) to specify that as a condition for payment of home health services under Medicare Part A or Medicare Part B, a physician must certify that the individual is correctly assigned to one of the home health resource groups. However, in response to comments we eliminated this requirement and did not make a modification to the regulation. We also proposed to make a conforming change at paragraph (b)(1) of § 424.22

regarding the timing of the recertification. Specifically, we proposed to amend § 424.22(b) by replacing the phrase ''at least every 2 months'' with ''at least every 60 days.'' We believe this is a minor conforming change to the regulation that will have little or no impact on expenditures. While we believe it is beneficial to establish separate codes for the certification and recertification services, the home health regulations do not impose any new requirements on physicians that will increase expenditures. As indicated in our April 2000, Program Memorandum (Provider Education Article: Role of Physicians in the Home Health Prospective Payment System, transmittal B–00–16), the prospective payment system does not introduce change to the plan of care. It remains the beneficiary's physician's responsibility to develop a plan of care based on his or her intimate knowledge of the medical condition of the home health patient.

The sustainable growth rate determined under section 1848(f) of the Act allows for an adjustment for changes in expenditures that ''will result from changes in law and regulations.'' Since there are no new requirements being imposed upon physicians and there are no regulatory changes that would mandate an adjustment to the SGR, we are making a budget neutrality adjustment to the conversion factor to ensure that expenditures do not increase as a result of this provision. We estimate that paying separately for certification and recertification of a plan of care for home health services will increase Medicare payments without the 0.3 percent offsetting adjustment to the conversion factor that we have applied.

F. Observation Care Codes

We believe that there are not any significant costs for this policy clarification. We believe physicians have not typically been billing for the discharge component of a hospital or observation stay of less than 8 hours. However, physicians who have been billing 99234 through 99236 for stays less than 8 hours in length would see a small reduction in payment. This policy clarification will give clear guidance to physicians and Medicare contractors in reviewing medical records and would assure consistent payment across contractors.

G. Ocular Photodynamic Therapy and Other Ophthalmological Treatments

As previously stated, we are establishing national HCPCS codes and payment amounts for ocular photodynamic therapy. If we did not establish national codes and pricing for this procedure, carriers that determined that this procedure is covered would use unlisted codes and determine pricing locally. There will be no budget effects associated with establishing national codes and payment amounts for this service since national pricing would substitute for use of unlisted codes and carrier pricing.

H. Electrical Bioimpedance

As stated earlier, we are establishing a national payment amount for electrical bioimpedance. This rule establishes national pricing amounts for a service currently priced by carriers. This change will have little impact on the Medicare program costs.

I. Global Period for Insertion, Removal, and Replacement of Pacemakers and Cardioverter Defibrillators

We proposed to change the global period for certain CPT codes involving the insertion, removal, and replacement of pacemakers and cardioverter defibrillators from 90 days to 0 days. The proposed changes were not anticipated to result in cost or savings because we proposed to reduce the work and practice expense RVUs to account for any claims that we would receive for post-operative visits that were previously bundled into payment for the 90-day global surgical service. As a result of comments received on the proposed rule, we are not adopting the proposed policy. The global period will remain at 90 days, and we will not implement the proposed reductions to the work and practice expense RVUs. Thus, since there is no change in policy, there are no budget implications of our decision on this issue in the final rule.

J. Antigen Supply

Our change from permitting a physician to bill for a 12-month, as opposed to a 12-week supply of antigen could benefit beneficiaries, since they will be able to obtain a year's supply of medication in a single visit. We believe that this change has no impact on program costs. Also, there is no impact on the beneficiary, since this change only aggregates four prescriptions into one, and the cost to the beneficiary remains the same.

K. Increased Space Allotment in Physical Therapy Salary Equivalency Guidelines

We are making an adjustment to our application of the salary equivalency guidelines that are used to determine the indirect components of the practice expense per hour for physical and occupational therapy. Payments for all outpatient physical and occupational therapy services will increase by 3 and 4 percent, respectively. This change will be budget neutral among all physician fee schedule services.

Other issues mentioned in the preamble are merely discussions or clarifications and, therefore, have no budgetary impact.

Budget-Neutrality

Each year since the fee schedule has been implemented, our actuaries have determined any adjustments needed to meet the budget-neutrality requirement of the statute. A component of the actuarial determination of budget-neutrality involves estimating the impact of changes in the volume-and-intensity of physicians' services provided to Medicare beneficiaries as a result of the proposed changes. Consistent with the provision in the November 1998 final rule, the actuaries would use a model that assumes a 30 percent volume-and-intensity response to price reductions. This year there will be a 5.0 percent increase in the conversion factor resulting from the physician fee schedule update. Since this update will offset any negative payment impacts resulting from this final rule, no volume and intensity adjustment is being incorporated into the physician fee schedule conversion factor in 2001.

Impact on Beneficiaries

Although changes in physicians' payments when the physician fee schedule was implemented in 1992 were large, we detected no problems with beneficiary access to care. Furthermore, since beginning our transition to a resource-based practice expense system in 1999, we have not found that there are problems with beneficiary access to care.

XI. Federalism

We have reviewed this final rule under the threshold criteria of EO 13132, Federalism, and we have determined that the final rule does not significantly affect the rights, roles, and responsibilities of States.

List of Subjects

42 CFR Part 410

Health facilities, Health professions, Kidney diseases, Laboratories, Medicare, Rural areas, X-rays.

42 CFR Part 414

Administrative practice and procedure, Health facilities, Health professions, Kidney diseases, Medicare,

Reporting and recordkeeping requirements, Rural areas, X-rays.

For the reasons set forth in the preamble, HCFA amends 42 CFR chapter IV as follows:

PART 410—SUPPLEMENTARY MEDICAL INSURANCE (SMI) BENEFITS

1. The authority citation for part 410 continues to read as follows:

Authority: Secs. 1102 and 1871 of the Social Security Act (42 U.S.C. 1302 and 1395hh).

2. In § 410.68, republish the introductory text and revise the introductory text for paragraph (b) to read as follows:

§ 410.68 Antigens: Scope and conditions.

Medicare Part B pays for—

* * * * *

(b) A supply of antigen sufficient for not more than 12 months that is—

* * * * *

PART 414—PAYMENT FOR PART B MEDICAL AND OTHER HEALTH SERVICES

3. The authority citation for part 414 continues to read as follows:

Authority: Secs. 1102, 1871, and 1881(b)(1) of the Social Security Act (42 U.S.C. 1302, 1395(hh), and 1395rr(b)(1).

4. Revise § 414.22(b)(5)(i) to read as follows:

§ 414.22 Relative value units (RVUs).

* * * * *

(b) * * *

(5) * * *

(i) Usually there are two levels of practice expense RVUs that correspond to each code.

(A) *Facility practice expense RVUs.* The lower facility practice expense RVUs apply to services furnished to patients in the hospital, skilled nursing facility, community mental health center, or in an ambulatory surgical center when the physician performs procedures on the ASC approved procedures list. (The facility practice expense RVUs for a particular code may not be greater than the non-facility RVUs for the code.)

(B) *Non-facility practice expense RVUs.* The higher non-facility practice expense RVUs apply to services performed in a physician's office, a patient's home, an ASC if the physician is performing a procedure not on the ASC approved procedures list, a nursing facility, or a facility or institution other than a hospital or skilled nursing facility, community mental health center, or ASC performing an ASC approved procedure.

(C) *Outpatient therapy services.* Outpatient therapy services billed under the physician fee schedule are paid using the non-facility practice expense RVU component.

* * * * *

(Catalog of Federal Domestic Assistance Program No. 93.778, Medical Assistance Program)

(Catalog of Federal Domestic Assistance Program No. 93.773, Medicare—Hospital Insurance; and Program No. 93.774, Medicare—Supplementary Medical Insurance Program)

Dated: October 20, 2000.

Michael M. Hash,

Acting Administrator, Health Care Financing Administration.

Dated: October 23, 2000.

Donna E. Shalala,

Secretary.

Note: These addenda will not appear in the Code of Federal Regulations.

Addendum A—Explanation and Use of Addenda B

The addenda on the following pages provide various data pertaining to the Medicare fee schedule for physicians' services furnished in 2001. Addendum B contains the RVUs for work, non-facility practice expense, facility practice expense, and malpractice expense, and other information for all services included in the physician fee schedule.

Addendum B—2001 Relative Value Units and Related Information Used in Determining Medicare Payments for 2001

This addendum contains the following information for each CPT code and alphanumeric HCPCS code, except for alphanumeric codes beginning with B (enteral and parenteral therapy), E (durable medical equipment), K (temporary codes for nonphysicians' services or items), or L (orthotics), and codes for anesthesiology.

1. *CPT/HCPCS code.* This is the CPT or alphanumeric HCPCS number for the service. Alphanumeric HCPCS codes are included at the end of this addendum.

2. *Modifier.* A modifier is shown if there is a technical component (modifier TC) and a professional component (PC) (modifier −26) for the service. If there is a PC and a TC for the service, Addendum B contains three entries for the code: One for the global values (both professional and technical); one for modifier −26 (PC); and one for modifier TC. The global service is not designated by a modifier, and physicians must bill using the code without a modifier if the physician furnishes both the PC and the TC of the service.

Modifier −53 is shown for a discontinued procedure. There will be RVUs for the code (CPT code 45378) with this modifier.

3. *Status indicator.* This indicator shows whether the CPT/HCPCS code is in the physician fee schedule and whether it is separately payable if the service is covered.

A = Active code. These codes are separately payable under the fee schedule if covered. There will be RVUs for codes with this status. The presence of an ''A'' indicator does not mean that Medicare has made a national decision regarding the coverage of the service. Carriers remain responsible for coverage decisions in the absence of a national Medicare policy.

B = Bundled code. Payment for covered services is always bundled into payment for other services not specified. If RVUs are shown, they are not used for Medicare payment. If these services are covered, payment for them is subsumed by the payment for the services to which they are incident. (An example is a telephone call from a hospital nurse regarding care of a patient.)

C = Carrier-priced code. Carriers will establish RVUs and payment amounts for these services, generally on a case-by-case basis following review of documentation, such as an operative report.

D = Deleted code. These codes are deleted effective with the beginning of the calendar year.

E = Excluded from physician fee schedule by regulation. These codes are for items or services that we chose to exclude from the physician fee schedule payment by regulation. No RVUs are shown, and no payment may be made under the physician fee schedule for these codes. Payment for them, if they are covered, continues under reasonable charge or other payment procedures.

G = Code not valid for Medicare purposes. Medicare does not recognize codes assigned this status. Medicare uses another code for reporting of, and payment for, these services.

N = Noncovered service. These codes are noncovered services. Medicare payment may not be made for these codes. If RVUs are shown, they are not used for Medicare payment.

P = Bundled or excluded code. There are no RVUs for these services. No separate payment should be made for them under the physician fee schedule.

— If the item or service is covered as incident to a physician's service and is furnished on the same day as a

physician's service, payment for it is bundled into the payment for the physician's service to which it is incident (an example is an elastic bandage furnished by a physician incident to a physician's service).

— If the item or service is covered as other than incident to a physician's service, it is excluded from the physician fee schedule (for example, colostomy supplies) and is paid under the other payment provisions of the Act.

R = Restricted coverage. Special coverage instructions apply. If the service is covered and no RVUs are shown, it is carrier-priced.

T = Injections. There are RVUs for these services, but they are only paid if there are no other services payable under the physician fee schedule billed on the same date by the same provider. If any other services payable under the physician fee schedule are billed on the same date by the same provider, these services are bundled into the service(s) for which payment is made.

X = Exclusion by law. These codes represent an item or service that is not within the definition of ''physicians services'' for physician fee schedule payment purposes. No RVUs are shown for these codes, and no payment may be made under the physician fee schedule. (Examples are ambulance services and clinical diagnostic laboratory services.)

4. *Description of code.* This is an abbreviated version of the narrative description of the code.

5. *Physician work RVUs.* These are the RVUs for the physician work for this service in 2000. Codes that are not used for Medicare payment are identified with a ''+.''

6. *Fully implemented non-facility practice expense RVUs.* These are the fully implemented resource-based practice expense RVUs for non-facility settings.

7. *Year 2000 Transition non-facility practice expense RVUs.* Blended non-facility practice expense RVUs for use in 2000.

8. *Fully implemented facility practice expense RVUs.* These are the fully implemented resource-based practice expense RVUs for facility settings.

9. *Year 2000 transition facility practice expense RVUs.* Blended facility practice expense RVUs for use in 2000.

10. *Malpractice expense RVUs.* These are the RVUs for the malpractice expense for the service for 2000.

11. *Fully implemented non-facility total.* This is the sum of the work, fully implemented non-facility practice expense, and malpractice expense RVUs.

12. *Year 2000 transition non-facility total.* This is the sum of the work, transition non-facility practice expense, and malpractice expense RVUs for use in 2000.

13. *Fully implemented facility total.* This is the sum of the work, fully implemented facility practice expense, and malpractice expense RVUs.

14. *Year 2000 transition facility total.* This is the sum of the work, transition facility practice expense, and malpractice expense RVUs for use in 2000.

15. *Global period.* This indicator shows the number of days in the global period for the code (0, 10, or 90 days). An explanation of the alpha codes follows:

MMM = The code describes a service furnished in uncomplicated maternity cases including antepartum care, delivery, and postpartum care. The usual global surgical concept does not apply. See the 1999 Physicians' Current Procedural Terminology for specific definitions.

XXX = The global concept does not apply.

YYY = The global period is to be set by the carrier (for example, unlisted surgery codes).

ZZZ = The code is part of another service and falls within the global period for the other service.

ADDENDUM B.—RELATIVE VALUE UNITS (RVU'S) AND RELATED INFORMATION

CPT[1]/ HCPCS[2]	MOD	Status	Description	Physician Work RVUs[3]	Fully Implemented Non-Facility PE RVUs	Year 2001 Transitional Non-Facility PE RVUs	Fully Implemented Facility PE RVUs	Year 2001 Transitional Facility PE RVUs	Mal-Practice RVUs	Fully Implemented Non-Facility Total	Year 2001 Transitional Non-Facility Total	Fully Implemented Facility Total	Year 2001 Transitional Facility Total	Global
10040		A	Acne surgery of skin abscess	1.18	1.58	1.27	0.52	0.44	0.05	2.81	2.50	1.75	1.67	010
10060		A	Drainage of skin abscess	1.17	1.29	1.09	0.65	0.55	0.08	2.54	2.34	1.90	1.80	010
10061		A	Drainage of skin abscess	2.40	1.99	1.67	1.15	0.95	0.17	4.56	4.24	3.72	3.52	010
10080		A	Drainage of pilonidal cyst	1.17	2.01	1.64	0.69	0.59	0.09	3.27	2.90	1.95	1.85	010
10081		A	Drainage of pilonidal cyst	2.45	2.77	2.38	1.60	1.35	0.19	5.41	5.02	4.24	3.99	010
10120		A	Remove foreign body	1.22	1.75	1.44	0.71	0.60	0.10	3.07	2.76	2.03	1.92	010
10121		A	Remove foreign body	2.69	2.71	2.31	1.80	1.49	0.25	5.65	5.25	4.74	4.43	010
10140		A	Drainage of hematoma/fluid	1.53	1.37	1.16	0.86	0.71	0.15	3.05	2.84	2.54	2.39	010
10160		A	Puncture drainage of lesion	1.20	1.48	1.21	0.76	0.62	0.11	2.79	2.52	2.07	1.93	010
10180		A	Complex drainage, wound	2.25	1.46	1.38	1.26	1.23	0.25	3.96	3.88	3.76	3.73	010
11000		A	Debride infected skin	0.60	0.55	0.52	0.24	0.24	0.05	1.20	1.17	0.89	0.89	000
11001		A	Debride infected skin add-on	0.30	0.31	0.30	0.11	0.12	0.02	0.63	0.62	0.43	0.44	ZZZ
11010		A	Debride skin, fx	4.20	2.45	2.91	2.01	2.58	0.45	7.10	7.56	6.66	7.23	010
11011		A	Debride skin/muscle, fx	4.95	3.89	4.20	2.66	3.28	0.53	9.37	9.68	8.14	8.76	000
11012		A	Debride skin/muscle/bone, fx	6.88	5.69	6.05	4.22	4.95	0.89	13.46	13.82	11.99	12.72	000
11040		A	Debride skin, partial	0.50	0.47	0.46	0.21	0.21	0.05	1.02	1.01	0.76	0.76	000
11041		A	Debride skin, full	0.82	0.64	0.63	0.34	0.33	0.08	1.54	1.53	1.24	1.23	000
11042		A	Debride skin/tissue	1.12	0.90	0.85	0.47	0.44	0.11	2.13	2.08	1.70	1.67	000
11043		A	Debride tissue/muscle	2.38	2.60	2.44	1.41	1.55	0.24	5.22	5.06	4.03	4.17	010
11044		A	Debride tissue/muscle/bone	3.06	3.11	3.10	1.83	2.14	0.34	6.51	6.50	5.23	5.54	010
11055		R	Trim skin lesion	0.27	0.35	0.33	0.12	0.13	0.02	0.64	0.62	0.41	0.42	000
11056		R	Trim skin lesions, 2 to 4	0.39	0.39	0.39	0.17	0.18	0.03	0.81	0.81	0.59	0.60	000
11057		R	Trim skin lesions, over 4	0.50	0.44	0.41	0.21	0.20	0.04	0.98	0.95	0.75	0.74	000
11100		A	Biopsy of skin lesion	0.81	1.53	1.29	0.38	0.36	0.04	2.38	2.14	1.23	1.21	000
11101		A	Biopsy, skin add-on	0.41	0.74	0.63	0.20	0.19	0.02	1.17	1.06	0.63	0.62	ZZZ
11200		A	Removal of skin tags	0.77	1.10	0.94	0.31	0.29	0.04	1.91	1.75	1.12	1.10	010
11201		A	Remove skin tags add-on	0.29	0.47	0.40	0.12	0.11	0.02	0.78	0.71	0.43	0.42	ZZZ
11300		A	Shave skin lesion	0.51	1.04	0.93	0.23	0.25	0.03	1.58	1.47	0.77	0.79	000
11301		A	Shave skin lesion	0.85	1.13	1.03	0.39	0.39	0.04	2.02	1.92	1.28	1.28	000
11302		A	Shave skin lesion	1.05	1.23	1.17	0.49	0.49	0.05	2.33	2.27	1.59	1.59	000
11303		A	Shave skin lesion	1.24	1.36	1.39	0.55	0.60	0.06	2.66	2.69	1.85	1.90	000

[1] CPT codes and descriptions only are copyright 2000 American Medical Association. All Rights Reserved. Applicable FARS/DFARS Apply.
[2] Copyright 1994 American Dental Association. All rights reserved.
[3] + Indicates RVUs are not used for Medicare payment.
[4] PE RVUs = Practice Expense Relative Value Units.

ADDENDUM B.—RELATIVE VALUE UNITS (RVU'S) AND RELATED INFORMATION—Continued

CPT[1]/ HCPCS[2]	MOD	Status	Description	Physician Work RVUs[3]	Fully Implemented Non-Facility PE RVUs	Year 2001 Transitional Non-Facility PE RVUs	Fully Implemented Facility PE RVUs	Year 2001 Transitional Facility PE RVUs	Mal-Practice RVUs	Fully Implemented Non-Facility Total	Year 2001 Transitional Non-Facility Total	Fully Implemented Facility Total	Year 2001 Transitional Facility Total	Global
11305		A	Shave skin lesion	0.67	0.81	0.75	0.30	0.30	0.04	1.52	1.46	1.01	1.01	000
11306		A	Shave skin lesion	0.99	1.08	1.00	0.44	0.43	0.05	2.12	2.04	1.48	1.47	000
11307		A	Shave skin lesion	1.14	1.20	1.16	0.51	0.51	0.05	2.39	2.35	1.70	1.70	000
11308		A	Shave skin lesion	1.41	1.28	1.34	0.64	0.67	0.07	2.76	2.82	2.12	2.15	000
11310		A	Shave skin lesion	0.73	1.14	1.04	0.34	0.35	0.04	1.91	1.81	1.11	1.12	000
11311		A	Shave skin lesion	1.05	1.25	1.17	0.51	0.50	0.05	2.35	2.27	1.61	1.60	000
11312		A	Shave skin lesion	1.20	1.33	1.30	0.58	0.59	0.06	2.59	2.56	1.84	1.85	000
11313		A	Shave skin lesion	1.62	1.60	1.61	0.76	0.77	0.09	3.31	3.32	2.47	2.48	000
11400		A	Removal of skin lesion	0.91	2.41	1.95	0.73	0.62	0.06	3.38	2.92	1.70	1.59	010
11401		A	Removal of skin lesion	1.32	2.43	2.01	0.89	0.76	0.09	3.84	3.42	2.30	2.17	010
11402		A	Removal of skin lesion	1.61	2.51	2.13	0.97	0.85	0.12	4.24	3.86	2.70	2.58	010
11403		A	Removal of skin lesion	1.92	2.76	2.39	1.10	0.99	0.16	4.84	4.47	3.18	3.07	010
11404		A	Removal of skin lesion	2.20	2.91	2.56	1.20	1.09	0.18	5.29	4.94	3.58	3.47	010
11406		A	Removal of skin lesion	2.76	3.19	2.90	1.42	1.58	0.25	6.20	5.91	4.43	4.59	010
11420		A	Removal of skin lesion	1.06	2.02	1.66	0.77	0.65	0.08	3.16	2.80	1.91	1.79	010
11421		A	Removal of skin lesion	1.53	2.35	1.96	1.00	0.85	0.11	3.99	3.60	2.64	2.49	010
11422		A	Removal of skin lesion	1.76	2.50	2.13	1.07	0.93	0.14	4.40	4.03	2.97	2.83	010
11423		A	Removal of skin lesion	2.17	2.93	2.55	1.24	1.11	0.17	5.27	4.89	3.58	3.45	010
11424		A	Removal of skin lesion	2.62	3.09	2.70	1.44	1.27	0.21	5.92	5.53	4.27	4.10	010
11426		A	Removal of skin lesion	3.78	3.73	3.30	1.90	1.92	0.34	7.85	7.42	6.02	6.04	010
11440		A	Removal of skin lesion	1.15	2.57	2.12	0.93	0.79	0.08	3.80	3.35	2.16	2.02	010
11441		A	Removal of skin lesion	1.61	2.72	2.27	1.17	0.99	0.11	4.44	3.99	2.89	2.71	010
11442		A	Removal of skin lesion	1.87	2.79	2.40	1.27	1.11	0.14	4.80	4.41	3.28	3.12	010
11443		A	Removal of skin lesion	2.49	3.34	2.90	1.61	1.41	0.18	6.01	5.57	4.28	4.08	010
11444		A	Removal of skin lesion	3.42	3.77	3.23	2.03	1.72	0.25	7.44	6.90	5.70	5.39	010
11446		A	Removal of skin lesion	4.49	4.23	3.66	2.53	2.14	0.30	9.02	8.45	7.32	6.93	010
11450		A	Removal, sweat gland lesion	2.73	3.99	3.72	1.10	1.55	0.26	6.98	6.71	4.09	4.54	090
11451		A	Removal, sweat gland lesion	3.95	4.90	4.46	1.66	2.03	0.39	9.24	8.80	6.00	6.37	090
11462		A	Removal, sweat gland lesion	2.51	4.08	3.72	1.02	1.42	0.23	6.82	6.46	3.76	4.16	090
11463		A	Removal, sweat gland lesion	3.95	5.57	4.72	1.69	1.81	0.40	9.92	9.07	6.04	6.16	090
11470		A	Removal, sweat gland lesion	3.25	4.40	4.06	1.33	1.75	0.30	7.95	7.61	4.88	5.30	090
11471		A	Removal, sweat gland lesion	4.41	5.41	4.73	1.84	2.05	0.40	10.22	9.54	6.65	6.86	090
11600		A	Removal of skin lesion	1.41	2.58	2.24	0.95	0.87	0.09	4.08	3.74	2.45	2.37	010
11601		A	Removal of skin lesion	1.93	2.66	2.37	1.10	1.02	0.12	4.71	4.42	3.15	3.07	010
11602		A	Removal of skin lesion	2.09	2.72	2.54	1.34	1.25	0.13	4.94	4.76	3.56	3.47	010
11603		A	Removal of skin lesion	2.35	2.90	2.79	1.41	1.36	0.16	5.41	5.30	3.92	3.87	010
11604		A	Removal of skin lesion	2.58	3.09	3.02	1.49	1.47	0.18	5.85	5.78	4.25	4.23	010
11606		A	Removal of skin lesion	3.43	3.65	3.58	1.80	2.20	0.28	7.36	7.29	5.51	5.91	010
11620		A	Removal of skin lesion	1.34	2.53	2.26	0.89	0.85	0.09	3.96	3.69	2.32	2.28	010
11621		A	Removal of skin lesion	1.97	2.70	2.50	1.36	1.26	0.12	4.79	4.59	3.45	3.35	010
11622		A	Removal of skin lesion	2.34	2.87	2.75	1.52	1.44	0.15	5.36	5.24	4.01	3.93	010
11623		A	Removal of skin lesion	2.93	2.82	2.82	1.74	1.66	0.20	5.95	5.95	4.87	4.79	010
11624		A	Removal of skin lesion	3.43	3.19	3.26	1.95	1.90	0.25	6.87	6.94	5.63	5.58	010
11626		A	Removal of skin lesion	4.30	4.20	4.08	2.38	2.71	0.35	8.85	8.73	7.03	7.36	010
11640		A	Removal of skin lesion	1.53	2.64	2.43	1.11	1.06	0.10	4.27	4.06	2.74	2.69	010
11641		A	Removal of skin lesion	2.44	3.00	2.82	1.67	1.54	0.15	5.59	5.41	4.26	4.13	010
11642		A	Removal of skin lesion	2.93	2.92	2.89	1.90	1.78	0.18	6.03	6.00	5.01	4.89	010
11643		A	Removal of skin lesion	3.50	3.29	3.29	2.19	2.05	0.24	7.03	7.03	5.93	5.79	010
11644		A	Removal of skin lesion	4.55	3.94	3.91	2.72	2.52	0.33	8.82	8.79	7.60	7.40	010
11646		A	Removal of skin lesion	5.95	5.22	5.09	3.43	3.75	0.46	11.63	11.50	9.84	10.16	010
11719		R	Trim nail(s)	0.11	0.49	0.43	0.04	0.06	0.01	0.61	0.55	0.16	0.18	000
11720		A	Debride nail, 1-5	0.32	0.42	0.40	0.13	0.14	0.02	0.76	0.74	0.47	0.48	000
11721		A	Debride nail, 6 or more	0.54	0.53	0.55	0.22	0.24	0.04	1.11	1.13	0.80	0.82	000
11730		A	Removal of nail plate	1.13	0.74	0.68	0.46	0.41	0.09	1.96	1.90	1.68	1.63	000
11732		A	Remove nail plate, add-on	0.57	0.29	0.29	0.23	0.21	0.05	0.91	0.91	0.85	0.83	ZZZ
11740		A	Drain blood from under nail	0.37	0.64	0.59	0.14	0.16	0.03	1.04	0.99	0.54	0.56	000
11750		A	Removal of nail bed	1.86	1.53	1.72	0.79	0.88	0.16	3.55	3.74	2.81	2.90	010
11752		A	Remove nail bed/finger tip	2.67	1.97	2.24	1.73	1.68	0.33	4.97	5.24	4.73	4.68	010
11755		A	Biopsy, nail unit	1.31	1.04	1.05	0.59	0.71	0.06	2.41	2.42	1.96	2.08	000
11760		A	Repair of nail bed	1.58	1.68	1.51	1.17	1.01	0.17	3.43	3.26	2.92	2.76	010
11762		A	Reconstruction of nail bed	2.89	2.13	2.30	1.84	1.73	0.32	5.34	5.51	5.05	4.94	010
11765		A	Excision of nail fold, toe	0.69	0.95	0.85	0.44	0.40	0.05	1.69	1.59	1.18	1.14	010
11770		A	Removal of pilonidal lesion	2.61	2.95	2.94	1.30	1.70	0.24	5.80	5.79	4.15	4.55	010
11771		A	Removal of pilonidal lesion	5.74	5.30	5.20	3.99	4.22	0.56	11.60	11.50	10.29	10.52	090
11772		A	Removal of pilonidal lesion	6.98	6.06	5.85	4.43	4.63	0.68	13.72	13.51	12.09	12.29	090
11900		A	Injection into skin lesions	0.52	0.73	0.62	0.23	0.21	0.02	1.27	1.16	0.77	0.75	000
11901		A	Added skin lesions injection	0.80	0.85	0.75	0.37	0.33	0.03	1.68	1.58	1.20	1.16	000
11920		R	Correct skin color defects	1.61	2.16	1.94	0.85	0.96	0.17	3.94	3.72	2.63	2.74	000
11921		R	Correct skin color defects	1.93	2.53	2.28	1.05	1.17	0.21	4.67	4.42	3.19	3.31	000
11922		R	Correct skin color defects	0.49	0.38	0.38	0.26	0.29	0.05	0.92	0.92	0.80	0.83	ZZZ
11950		R	Therapy for contour defects	0.84	1.27	1.28	0.47	0.68	0.06	2.17	2.18	1.37	1.58	000
11951		R	Therapy for contour defects	1.19	1.69	1.59	0.51	0.71	0.10	2.98	2.88	1.80	2.00	000
11952		R	Therapy for contour defects	1.69	2.09	1.89	0.90	1.00	0.17	3.95	3.75	2.76	2.86	000
11954		R	Therapy for contour defects	1.85	2.76	2.39	0.96	1.04	0.19	4.80	4.43	3.00	3.08	000
11960		A	Insert tissue expander(s)	9.08	NA	NA	10.49	9.97	0.88	NA	NA	20.45	19.93	090
11970		A	Replace tissue expander	7.06	NA	NA	5.06	5.90	0.77	NA	NA	12.89	13.73	090
11971		A	Remove tissue expander(s)	2.13	6.02	5.14	3.81	3.48	0.21	8.36	7.48	6.15	5.82	090
11975		N	Insert contraceptive cap	+1.48	1.56	1.46	0.59	0.73	0.14	3.18	3.08	2.21	2.35	XXX
11976		R	Removal of contraceptive cap	1.78	1.55	1.51	0.72	0.89	0.17	3.50	3.46	2.67	2.84	XXX
11977		N	Removal/reinsert contra cap	+3.30	2.28	2.35	1.32	1.63	0.31	5.89	5.96	4.93	5.24	XXX
11980		A	Implant hormone pellet(s)	1.48	1.14	1.14	0.63	0.63	0.10	2.72	2.72	2.21	2.21	000
12001		A	Repair superficial wound(s)	1.70	2.31	1.89	0.84	0.79	0.13	4.14	3.72	2.67	2.62	010
12002		A	Repair superficial wound(s)	1.86	2.41	2.02	0.87	0.87	0.15	4.42	4.03	2.88	2.88	010

[1] CPT codes and descriptions only are copyright 2000 American Medical Association. All Rights Reserved. Applicable FARS/DFARS Apply.
[2] Copyright 1994 American Dental Association. All rights reserved.
[3] + Indicates RVUs are not used for Medicare payment.
[4] PE RVUs = Practice Expense Relative Value Units.

ADDENDUM B.—RELATIVE VALUE UNITS (RVU'S) AND RELATED INFORMATION—Continued

CPT[1]/ HCPCS[2]	MOD	Status	Description	Physician Work RVUs[3]	Fully Implemented Non-Facility PE RVUs	Year 2001 Transitional Non-Facility PE RVUs	Fully Implemented Facility PE RVUs	Year 2001 Transitional Facility PE RVUs	Mal-Practice RVUs	Fully Implemented Non-Facility Total	Year 2001 Transitional Non-Facility Total	Fully Implemented Facility Total	Year 2001 Transitional Facility Total	Global
12004		A	Repair superficial wound(s)	2.24	2.60	2.26	0.99	1.05	0.17	5.01	4.67	3.40	3.46	010
12005		A	Repair superficial wound(s)	2.86	3.07	2.70	1.25	1.34	0.23	6.16	5.79	4.34	4.43	010
12006		A	Repair superficial wound(s)	3.67	4.17	3.61	1.95	1.95	0.31	8.15	7.59	5.93	5.93	010
12007		A	Repair superficial wound(s)	4.12	4.62	3.95	2.28	2.20	0.37	9.11	8.44	6.77	6.69	010
12011		A	Repair superficial wound(s)	1.76	2.39	1.99	0.85	0.84	0.14	4.29	3.89	2.75	2.74	010
12013		A	Repair superficial wound(s)	1.99	2.55	2.19	0.90	0.96	0.16	4.70	4.34	3.05	3.11	010
12014		A	Repair superficial wound(s)	2.46	2.86	2.47	1.08	1.13	0.18	5.50	5.11	3.72	3.77	010
12015		A	Repair superficial wound(s)	3.19	3.31	2.92	1.28	1.40	0.24	6.74	6.35	4.71	4.83	010
12016		A	Repair superficial wound(s)	3.93	3.83	3.49	1.51	1.75	0.32	8.08	7.74	5.76	6.00	010
12017		A	Repair superficial wound(s)	4.71	5.35	4.93	2.46	2.76	0.39	10.45	10.03	7.56	7.86	010
12018		A	Repair superficial wound(s)	5.53	6.32	6.14	2.75	3.46	0.46	12.31	12.13	8.74	9.45	010
12020		A	Closure of split wound	2.62	2.62	2.29	1.49	1.44	0.24	5.48	5.15	4.35	4.30	010
12021		A	Closure of split wound	1.84	2.10	1.74	1.15	0.95	0.19	4.13	3.77	3.18	2.98	010
12031		A	Layer closure of wound(s)	2.15	2.76	2.27	1.20	1.00	0.15	5.06	4.57	3.50	3.30	010
12032		A	Layer closure of wound(s)	2.47	2.84	2.42	1.29	1.11	0.15	5.46	5.04	3.91	3.73	010
12034		A	Layer closure of wound(s)	2.92	3.12	2.74	1.46	1.50	0.21	6.25	5.87	4.59	4.63	010
12035		A	Layer closure of wound(s)	3.43	3.05	2.81	1.68	1.78	0.30	6.78	6.54	5.41	5.51	010
12036		A	Layer closure of wound(s)	4.05	5.22	4.55	2.52	2.52	0.41	9.68	9.01	6.98	6.98	010
12037		A	Layer closure of wound(s)	4.67	5.56	5.01	2.88	3.00	0.49	10.72	10.17	8.04	8.16	010
12041		A	Layer closure of wound(s)	2.37	3.06	2.52	1.27	1.07	0.17	5.60	5.06	3.81	3.61	010
12042		A	Layer closure of wound(s)	2.74	3.05	2.61	1.42	1.23	0.17	5.96	5.52	4.33	4.14	010
12044		A	Layer closure of wound(s)	3.14	3.20	2.84	1.62	1.66	0.24	6.58	6.22	5.00	5.04	010
12045		A	Layer closure of wound(s)	3.64	3.58	3.26	1.86	1.97	0.34	7.56	7.24	5.84	5.95	010
12046		A	Layer closure of wound(s)	4.25	5.24	4.70	2.59	2.71	0.40	9.89	9.35	7.24	7.36	010
12047		A	Layer closure of wound(s)	4.65	5.96	5.56	2.92	3.28	0.41	11.02	10.62	7.98	8.34	010
12051		A	Layer closure of wound(s)	2.47	3.03	2.55	1.42	1.20	0.16	5.66	5.18	4.05	3.83	010
12052		A	Layer closure of wound(s)	2.77	3.01	2.66	1.38	1.24	0.17	5.95	5.60	4.32	4.18	010
12053		A	Layer closure of wound(s)	3.12	3.16	2.85	1.52	1.62	0.20	6.48	6.17	4.84	4.94	010
12054		A	Layer closure of wound(s)	3.46	3.48	3.32	1.65	1.94	0.25	7.19	7.03	5.36	5.65	010
12055		A	Layer closure of wound(s)	4.43	4.67	4.38	2.16	2.50	0.35	9.45	9.16	6.94	7.28	010
12056		A	Layer closure of wound(s)	5.24	6.70	6.31	2.89	3.45	0.43	12.37	11.98	8.56	9.12	010
12057		A	Layer closure of wound(s)	5.96	6.55	6.42	3.87	4.41	0.50	13.01	12.88	10.33	10.87	010
13100		A	Repair of wound or lesion	3.12	3.41	2.87	1.88	1.57	0.21	6.74	6.20	5.21	4.90	010
13101		A	Repair of wound or lesion	3.92	3.66	3.31	2.35	2.05	0.22	7.80	7.45	6.49	6.19	010
13102		A	Repair wound/lesion add-on	1.24	0.74	0.74	0.59	0.59	0.10	2.08	2.08	1.93	1.93	ZZZ
13120		A	Repair of wound or lesion	3.30	3.52	3.01	1.94	1.64	0.23	7.05	6.54	5.47	5.17	010
13121		A	Repair of wound or lesion	4.33	3.88	3.63	2.42	2.18	0.25	8.46	8.21	7.00	6.76	010
13122		A	Repair wound/lesion add-on	1.44	0.87	0.87	0.69	0.69	0.12	2.43	2.43	2.25	2.25	ZZZ
13131		A	Repair of wound or lesion	3.79	3.76	3.36	2.24	1.95	0.25	7.80	7.40	6.28	5.99	010
13132		A	Repair of wound or lesion	5.95	4.61	4.70	3.31	3.10	0.32	10.88	10.97	9.58	9.37	010
13133		A	Repair wound/lesion add-on	2.19	1.22	1.22	1.04	1.04	0.17	3.58	3.58	3.40	3.40	ZZZ
13150		A	Repair of wound or lesion	3.81	5.24	4.41	2.68	2.49	0.29	9.34	8.51	6.78	6.59	010
13151		A	Repair of wound or lesion	4.45	5.19	4.56	3.13	2.68	0.28	9.92	9.29	7.86	7.41	010
13152		A	Repair of wound or lesion	6.33	5.91	5.83	4.04	3.73	0.38	12.62	12.54	10.75	10.44	010
13153		A	Repair wound/lesion add-on	2.38	1.35	1.35	1.13	1.13	0.18	3.91	3.91	3.69	3.69	ZZZ
13160		A	Late closure of wound	10.48	NA	NA	6.41	5.71	1.19	NA	NA	18.08	17.38	090
14000		A	Skin tissue rearrangement	5.89	7.49	6.54	4.63	3.94	0.46	13.84	12.89	10.98	10.29	090
14001		A	Skin tissue rearrangement	8.47	8.96	8.01	6.01	5.80	0.65	18.08	17.13	15.13	14.92	090
14020		A	Skin tissue rearrangement	6.59	8.11	7.41	5.32	5.32	0.50	15.20	14.50	12.41	12.41	090
14021		A	Skin tissue rearrangement	10.06	9.44	8.77	7.16	7.06	0.69	20.19	19.52	17.91	17.81	090
14040		A	Skin tissue rearrangement	7.87	8.37	8.12	6.08	5.48	0.53	16.77	16.52	14.48	13.88	090
14041		A	Skin tissue rearrangement	11.49	10.20	9.79	7.97	7.05	0.68	22.37	21.96	20.14	19.22	090
14060		A	Skin tissue rearrangement	8.50	8.86	8.75	6.95	7.32	0.59	17.95	17.84	16.04	16.41	090
14061		A	Skin tissue rearrangement	12.29	11.08	11.16	8.92	8.11	0.75	24.12	24.20	21.96	21.15	090
14300		A	Skin tissue rearrangement	11.76	10.43	10.89	8.48	9.43	0.88	23.07	23.53	21.12	22.07	090
14350		A	Skin tissue rearrangement	9.61	NA	NA	6.38	6.43	1.09	NA	NA	17.08	17.13	090
15000		A	Skin graft	4.00	2.51	2.47	1.97	2.06	0.37	6.88	6.84	6.34	6.43	000
15001		A	Skin graft add-on	1.00	0.57	0.57	0.44	0.44	0.11	1.68	1.68	1.55	1.55	ZZZ
15050		A	Skin pinch graft	4.30	4.88	4.15	3.95	3.45	0.46	9.64	8.91	8.71	8.21	090
15100		A	Skin split graft	9.05	6.28	5.94	6.19	5.88	0.94	16.27	15.93	16.18	15.87	090
15101		A	Skin split graft add-on	1.72	1.20	1.33	0.78	1.02	0.18	3.10	3.23	2.68	2.92	ZZZ
15120		A	Skin split graft	9.83	8.99	8.39	6.68	6.65	0.87	19.69	19.09	17.38	17.35	090
15121		A	Skin split graft add-on	2.67	1.58	1.98	1.28	1.75	0.27	4.52	4.92	4.22	4.69	ZZZ
15200		A	Skin full graft	8.03	9.61	8.33	5.66	5.37	0.73	18.37	17.09	14.42	14.13	090
15201		A	Skin full graft add-on	1.32	1.00	1.21	0.67	0.90	0.14	2.46	2.67	2.13	2.36	ZZZ
15220		A	Skin full graft	7.87	9.69	8.58	6.21	5.97	0.68	18.24	17.13	14.76	14.52	090
15221		A	Skin full graft add-on	1.19	0.98	1.17	0.59	0.80	0.12	2.29	2.48	1.90	2.11	ZZZ
15240		A	Skin full graft	9.04	9.30	8.63	7.08	6.97	0.77	19.11	18.44	16.89	16.78	090
15241		A	Skin full graft add-on	1.86	1.52	1.79	0.97	1.28	0.17	3.55	3.82	3.00	3.31	ZZZ
15260		A	Skin full graft	10.06	9.24	8.96	7.59	7.72	0.63	19.93	19.65	18.28	18.41	090
15261		A	Skin full graft add-on	2.23	1.63	2.00	1.18	1.55	0.17	4.03	4.40	3.58	3.95	ZZZ
15342		A	Cultured skin graft, 25 cm	1.00	2.20	2.20	0.78	0.78	0.39	3.59	3.59	2.17	2.17	010
15343		A	Culture skn graft addl 25 cm	0.25	0.28	0.28	0.10	0.10	0.09	0.62	0.62	0.44	0.44	ZZZ
15350		A	Skin homograft	4.00	7.22	6.00	4.35	3.85	0.42	11.64	10.42	8.77	8.27	090
15351		A	Skin homograft add-on	1.00	0.94	0.94	0.43	0.43	0.11	2.05	2.05	1.54	1.54	ZZZ
15400		A	Skin heterograft	4.00	5.14	4.14	5.14	4.14	0.40	9.54	8.54	9.54	8.54	090
15401		A	Skin heterograft add-on	1.00	1.15	1.15	0.48	0.48	0.11	2.26	2.26	1.59	1.59	ZZZ
15570		A	Form skin pedicle flap	9.21	8.44	7.82	6.41	6.30	0.96	18.61	17.99	16.58	16.47	090
15572		A	Form skin pedicle flap	9.27	7.54	7.12	6.21	6.12	0.93	17.74	17.32	16.41	16.32	090
15574		A	Form skin pedicle flap	9.88	8.53	7.86	6.93	6.66	0.92	19.33	18.66	17.73	17.46	090
15576		A	Form skin pedicle flap	8.69	8.97	7.58	6.38	5.63	0.72	18.38	16.99	15.79	15.04	090
15600		A	Skin graft	1.91	6.42	5.50	2.31	2.30	0.19	8.52	7.60	4.41	4.40	090
15610		A	Skin graft	2.42	4.49	4.13	2.63	2.70	0.25	7.16	6.80	5.30	5.37	090

[1] CPT codes and descriptions only are copyright 2000 American Medical Association. All Rights Reserved. Applicable FARS/DFARS Apply.
[2] Copyright 1994 American Dental Association. All rights reserved.
[3] + Indicates RVUs are not used for Medicare payment.
[4] PE RVUs = Practice Expense Relative Value Units.

ADDENDUM B.—RELATIVE VALUE UNITS (RVU'S) AND RELATED INFORMATION—Continued

CPT[1]/ HCPCS[2]	MOD	Status	Description	Physician Work RVUs[3]	Fully Implemented Non-Facility PE RVUs	Year 2001 Transitional Non-Facility PE RVUs	Fully Implemented Facility PE RVUs	Year 2001 Transitional Facility PE RVUs	Mal-Practice RVUs	Fully Implemented Non-Facility Total	Year 2001 Transitional Non-Facility Total	Fully Implemented Facility Total	Year 2001 Transitional Facility Total	Global
15620		A	Skin graft	2.94	6.76	6.00	3.24	3.31	0.28	9.98	9.22	6.46	6.53	090
15630		A	Skin graft	3.27	6.12	5.57	3.67	3.73	0.28	9.67	9.12	7.22	7.28	090
15650		A	Transfer skin pedicle flap	3.97	6.18	5.82	3.81	4.04	0.36	10.51	10.15	8.14	8.37	090
15732		A	Muscle-skin graft, head/neck	17.84	NA	NA	11.53	12.85	1.50	NA	NA	30.87	32.19	090
15734		A	Muscle-skin graft, trunk	17.79	NA	NA	11.45	13.75	1.91	NA	NA	31.15	33.45	090
15736		A	Muscle-skin graft, arm	16.27	NA	NA	10.80	12.50	1.78	NA	NA	28.85	30.55	090
15738		A	Muscle-skin graft, leg	17.92	NA	NA	11.35	12.01	1.95	NA	NA	31.22	31.88	090
15740		A	Island pedicle flap graft	10.25	8.98	9.56	7.14	8.18	0.62	19.85	20.43	18.01	19.05	090
15750		A	Neurovascular pedicle graft	11.41	NA	NA	8.14	9.35	1.12	NA	NA	20.67	21.88	090
15756		A	Free muscle flap, microvasc	35.23	NA	NA	18.83	22.29	3.11	NA	NA	57.17	60.63	090
15757		A	Free skin flap, microvasc	35.23	NA	NA	22.18	24.80	3.37	NA	NA	60.78	63.40	090
15758		A	Free fascial flap, microvasc	35.10	NA	NA	22.50	25.04	3.52	NA	NA	61.12	63.66	090
15760		A	Composite skin graft	8.74	9.29	8.95	6.80	7.08	0.72	18.75	18.41	16.26	16.54	090
15770		A	Derma-fat-fascia graft	7.52	NA	NA	6.08	6.59	0.78	NA	NA	14.38	14.89	090
15775		R	Hair transplant punch grafts	3.96	3.08	3.09	1.60	1.98	0.43	7.47	7.48	5.99	6.37	000
15776		R	Hair transplant punch grafts	5.54	3.93	4.04	2.99	3.34	0.60	10.07	10.18	9.13	9.48	000
15780		A	Abrasion treatment of skin	7.29	6.36	5.19	6.36	4.98	0.41	14.06	12.89	14.06	12.68	090
15781		A	Abrasion treatment of skin	4.85	4.83	4.65	4.83	4.14	0.27	9.95	9.77	9.95	9.26	090
15782		A	Abrasion treatment of skin	4.32	4.14	3.43	4.14	3.27	0.21	8.67	7.96	8.67	7.80	090
15783		A	Abrasion treatment of skin	4.29	4.49	3.87	3.48	2.86	0.26	9.04	8.42	8.03	7.41	090
15786		A	Abrasion, lesion, single	2.03	1.71	1.45	1.29	1.05	0.11	3.85	3.59	3.43	3.19	010
15787		A	Abrasion, lesions, add-on	0.33	0.38	0.35	0.17	0.16	0.02	0.73	0.70	0.52	0.51	ZZZ
15788		R	Chemical peel, face, epiderm	2.09	3.08	2.71	1.05	1.19	0.11	5.28	4.91	3.25	3.39	090
15789		R	Chemical peel, face, dermal	4.92	5.68	4.66	3.69	3.17	0.27	10.87	9.85	8.88	8.36	090
15792		R	Chemical peel, nonfacial	1.86	2.84	2.27	1.83	1.51	0.10	4.80	4.23	3.79	3.47	090
15793		A	Chemical peel, nonfacial	3.74	NA	NA	3.38	2.67	0.17	NA	NA	7.29	6.58	090
15810		A	Salabrasion	4.74	3.80	3.88	3.80	3.88	0.42	8.96	9.04	8.96	9.04	090
15811		A	Salabrasion	5.39	4.07	4.07	4.07	4.07	0.52	9.98	9.98	9.98	9.98	090
15819		A	Plastic surgery, neck	9.38	NA	NA	6.87	7.33	0.77	NA	NA	17.02	17.48	090
15820		A	Revision of lower eyelid	5.15	10.70	9.56	6.60	6.49	0.30	16.15	15.01	12.05	11.94	090
15821		A	Revision of lower eyelid	5.72	11.31	10.19	6.77	6.79	0.31	17.34	16.22	12.80	12.82	090
15822		A	Revision of upper eyelid	4.45	8.92	8.02	5.99	5.82	0.22	13.59	12.69	10.66	10.49	090
15823		A	Revision of upper eyelid	7.05	10.19	9.74	7.17	7.47	0.32	17.56	17.11	14.54	14.84	090
15824		R	Removal of forehead wrinkles	0.00	0.00	0.00	0.00	0.00	0.00	0.00	0.00	0.00	0.00	XXX
15825		R	Removal of neck wrinkles	0.00	0.00	0.00	0.00	0.00	0.00	0.00	0.00	0.00	0.00	XXX
15826		R	Removal of brow wrinkles	0.00	0.00	0.00	0.00	0.00	0.00	0.00	0.00	0.00	0.00	XXX
15828		R	Removal of face wrinkles	0.00	0.00	0.00	0.00	0.00	0.00	0.00	0.00	0.00	0.00	XXX
15829		R	Removal of skin wrinkles	0.00	0.00	0.00	0.00	0.00	0.00	0.00	0.00	0.00	0.00	XXX
15831		A	Excise excessive skin tissue	12.40	NA	NA	8.18	8.81	1.30	NA	NA	21.88	22.51	090
15832		A	Excise excessive skin tissue	11.59	NA	NA	7.82	8.12	1.21	NA	NA	20.62	20.92	090
15833		A	Excise excessive skin tissue	10.64	NA	NA	7.50	7.31	1.17	NA	NA	19.31	19.12	090
15834		A	Excise excessive skin tissue	10.85	NA	NA	6.14	6.55	1.18	NA	NA	18.17	18.58	090
15835		A	Excise excessive skin tissue	11.67	NA	NA	5.73	6.20	1.13	NA	NA	18.53	19.00	090
15836		A	Excise excessive skin tissue	9.34	NA	NA	6.18	6.21	0.95	NA	NA	16.47	16.50	090
15837		A	Excise excessive skin tissue	8.43	7.85	7.51	6.11	6.20	0.78	17.06	16.72	15.32	15.41	090
15838		A	Excise excessive skin tissue	7.13	NA	NA	5.70	5.87	0.58	NA	NA	13.41	13.58	090
15839		A	Excise excessive skin tissue	9.38	7.60	6.36	6.06	5.21	0.88	17.86	16.62	16.32	15.47	090
15840		A	Graft for face nerve palsy	13.26	NA	NA	9.85	11.35	1.15	NA	NA	24.26	25.76	090
15841		A	Graft for face nerve palsy	23.26	NA	NA	15.30	16.05	2.65	NA	NA	41.21	41.96	090
15842		A	Flap for face nerve palsy	37.96	NA	NA	21.94	24.32	3.99	NA	NA	63.89	66.27	090
15845		A	Skin and muscle repair, face	12.57	NA	NA	8.97	10.48	0.80	NA	NA	22.34	23.85	090
15850		B	Removal of sutures	+0.78	1.38	1.13	0.31	0.33	0.04	2.20	1.95	1.13	1.15	XXX
15851		A	Removal of sutures	0.86	1.56	1.25	0.35	0.31	0.05	2.47	2.16	1.26	1.22	000
15852		A	Dressing change,not for burn	0.86	1.75	1.43	0.37	0.34	0.07	2.68	2.36	1.30	1.27	000
15860		A	Test for blood flow in graft	1.95	1.36	1.39	0.83	0.99	0.13	3.44	3.47	2.91	3.07	000
15876		R	Suction assisted lipectomy	0.00	0.00	0.00	0.00	0.00	0.00	0.00	0.00	0.00	0.00	XXX
15877		R	Suction assisted lipectomy	0.00	0.00	0.00	0.00	0.00	0.00	0.00	0.00	0.00	0.00	XXX
15878		R	Suction assisted lipectomy	0.00	0.00	0.00	0.00	0.00	0.00	0.00	0.00	0.00	0.00	XXX
15879		R	Suction assisted lipectomy	0.00	0.00	0.00	0.00	0.00	0.00	0.00	0.00	0.00	0.00	XXX
15920		A	Removal of tail bone ulcer	7.95	NA	NA	5.53	4.95	0.83	NA	NA	14.31	13.73	090
15922		A	Removal of tail bone ulcer	9.90	NA	NA	7.27	7.08	1.06	NA	NA	18.23	18.04	090
15931		A	Remove sacrum pressure sore	9.24	NA	NA	5.71	5.08	0.95	NA	NA	15.90	15.27	090
15933		A	Remove sacrum pressure sore	10.85	NA	NA	7.78	7.71	1.14	NA	NA	19.77	19.70	090
15934		A	Remove sacrum pressure sore	12.69	NA	NA	8.45	8.36	1.35	NA	NA	22.49	22.40	090
15935		A	Remove sacrum pressure sore	14.57	NA	NA	10.35	10.81	1.56	NA	NA	26.48	26.94	090
15936		A	Remove sacrum pressure sore	12.38	NA	NA	9.01	9.55	1.32	NA	NA	22.71	23.25	090
15937		A	Remove sacrum pressure sore	14.21	NA	NA	10.43	11.48	1.51	NA	NA	26.15	27.20	090
15940		A	Remove hip pressure sore	9.34	NA	NA	6.02	5.48	0.98	NA	NA	16.34	15.80	090
15941		A	Remove hip pressure sore	11.43	NA	NA	9.75	9.23	1.23	NA	NA	22.41	21.89	090
15944		A	Remove hip pressure sore	11.46	NA	NA	8.66	9.01	1.21	NA	NA	21.33	21.68	090
15945		A	Remove hip pressure sore	12.69	NA	NA	9.77	10.35	1.38	NA	NA	23.84	24.42	090
15946		A	Remove hip pressure sore	21.57	NA	NA	14.60	15.46	2.32	NA	NA	38.49	39.35	090
15950		A	Remove thigh pressure sore	7.54	NA	NA	5.24	4.75	0.80	NA	NA	13.58	13.09	090
15951		A	Remove thigh pressure sore	10.72	NA	NA	7.72	7.87	1.14	NA	NA	19.58	19.73	090
15952		A	Remove thigh pressure sore	11.39	NA	NA	7.44	7.52	1.19	NA	NA	20.02	20.10	090
15953		A	Remove thigh pressure sore	12.63	NA	NA	8.94	9.17	1.38	NA	NA	22.95	23.18	090
15956		A	Remove thigh pressure sore	15.52	NA	NA	10.66	12.63	1.64	NA	NA	27.82	29.79	090
15958		A	Remove thigh pressure sore	15.48	NA	NA	10.97	12.85	1.66	NA	NA	28.11	29.99	090
15999		C	Removal of pressure sore	0.00	0.00	0.00	0.00	0.00	0.00	0.00	0.00	0.00	0.00	YYY
16000		A	Initial treatment of burn(s)	0.89	0.99	0.84	0.27	0.25	0.06	1.94	1.79	1.22	1.20	000
16010		A	Treatment of burn(s)	0.87	1.08	0.90	0.38	0.33	0.07	2.02	1.84	1.32	1.27	000
16015		A	Treatment of burn(s)	2.35	1.79	1.90	1.00	1.30	0.22	4.36	4.47	3.57	3.87	000
16020		A	Treatment of burn(s)	0.80	1.09	0.91	0.26	0.24	0.06	1.95	1.77	1.12	1.10	000

[1] CPT codes and descriptions only are copyright 2000 American Medical Association. All Rights Reserved. Applicable FARS/DFARS Apply.
[2] Copyright 1994 American Dental Association. All rights reserved.
[3] + Indicates RVUs are not used for Medicare payment.
[4] PE RVUs = Practice Expense Relative Value Units.

ADDENDUM B.—RELATIVE VALUE UNITS (RVU'S) AND RELATED INFORMATION—Continued

CPT[1]/ HCPCS[2]	MOD	Status	Description	Physician Work RVUs[3]	Fully Implemented Non-Facility PE RVUs	Year 2001 Transitional Non-Facility PE RVUs	Fully Implemented Facility PE RVUs	Year 2001 Transitional Facility PE RVUs	Mal-Practice RVUs	Fully Implemented Non-Facility Total	Year 2001 Transitional Non-Facility Total	Fully Implemented Facility Total	Year 2001 Transitional Facility Total	Global
16025		A	Treatment of burn(s)	1.85	1.74	1.43	0.69	0.58	0.16	3.75	3.44	2.70	2.59	000
16030		A	Treatment of burn(s)	2.08	2.98	2.38	0.95	0.85	0.18	5.24	4.64	3.21	3.11	000
16035		A	Incision of burn scab, initi	3.75	NA	NA	1.59	1.70	0.36	NA	NA	5.70	5.81	090
16036		A	Incise burn scab, addl incis	1.50	NA	NA	0.64	0.64	0.18	NA	NA	2.32	2.32	ZZZ
17000		A	Destroy benign/premal lesion	0.60	1.04	0.90	0.27	0.26	0.03	1.67	1.53	0.90	0.89	010
17003		A	Destroy lesions, 2-14	0.15	0.23	0.21	0.07	0.07	0.01	0.39	0.37	0.23	0.23	ZZZ
17004		A	Destroy lesions, 15 or more	2.79	2.46	2.46	1.29	1.27	0.12	5.37	5.37	4.20	4.18	010
17106		A	Destruction of skin lesions	4.59	4.45	3.86	2.64	2.24	0.28	9.32	8.73	7.51	7.11	090
17107		A	Destruction of skin lesions	9.16	6.54	5.91	4.73	4.05	0.53	16.23	15.60	14.42	13.74	090
17108		A	Destruction of skin lesions	13.20	8.64	9.01	7.26	7.97	0.89	22.73	23.10	21.35	22.06	090
17110		A	Destruct lesion, 1-14	0.65	1.00	0.86	0.26	0.25	0.04	1.69	1.55	0.95	0.94	010
17111		A	Destruct lesion, 15 or more	0.92	1.15	1.03	0.40	0.38	0.04	2.11	1.99	1.36	1.34	010
17250		A	Chemical cautery, tissue	0.50	0.66	0.59	0.21	0.21	0.04	1.20	1.13	0.75	0.75	000
17260		A	Destruction of skin lesions	0.91	1.29	1.28	0.42	0.47	0.04	2.24	2.23	1.37	1.42	010
17261		A	Destruction of skin lesions	1.17	1.41	1.44	0.55	0.60	0.05	2.63	2.66	1.77	1.82	010
17262		A	Destruction of skin lesions	1.58	1.61	1.70	0.75	0.81	0.07	3.26	3.35	2.40	2.46	010
17263		A	Destruction of skin lesions	1.79	1.72	1.90	0.83	0.93	0.08	3.59	3.77	2.70	2.80	010
17264		A	Destruction of skin lesions	1.94	1.80	2.05	0.85	0.99	0.08	3.82	4.07	2.87	3.01	010
17266		A	Destruction of skin lesions	2.34	2.00	2.35	0.97	1.15	0.11	4.45	4.80	3.42	3.60	010
17270		A	Destruction of skin lesions	1.32	1.49	1.48	0.62	0.65	0.06	2.87	2.86	2.00	2.03	010
17271		A	Destruction of skin lesions	1.49	1.57	1.65	0.72	0.78	0.06	3.12	3.20	2.27	2.33	010
17272		A	Destruction of skin lesions	1.77	1.71	1.88	0.85	0.94	0.07	3.55	3.72	2.69	2.78	010
17273		A	Destruction of skin lesions	2.05	1.86	2.10	0.98	1.09	0.09	4.00	4.24	3.12	3.23	010
17274		A	Destruction of skin lesions	2.59	2.12	2.46	1.19	1.33	0.11	4.82	5.16	3.89	4.03	010
17276		A	Destruction of skin lesions	3.20	2.42	2.74	1.70	1.74	0.15	5.77	6.09	5.05	5.09	010
17280		A	Destruction of skin lesions	1.17	1.33	1.45	0.54	0.63	0.05	2.55	2.67	1.76	1.85	010
17281		A	Destruction of skin lesions	1.72	1.69	1.84	0.83	0.91	0.07	3.48	3.63	2.62	2.70	010
17282		A	Destruction of skin lesions	2.04	1.85	2.09	0.99	1.09	0.09	3.98	4.22	3.12	3.22	010
17283		A	Destruction of skin lesions	2.64	2.15	2.43	1.25	1.35	0.11	4.90	5.18	4.00	4.10	010
17284		A	Destruction of skin lesions	3.21	2.44	2.78	1.51	1.61	0.14	5.79	6.13	4.86	4.96	010
17286		A	Destruction of skin lesions	4.44	3.06	3.47	2.46	2.43	0.22	7.72	8.13	7.12	7.09	010
17304		A	Chemosurgery of skin lesion	7.60	7.71	6.87	3.67	3.30	0.31	15.62	14.78	11.58	11.21	000
17305		A	2nd stage chemosurgery	2.85	3.58	3.30	1.38	1.34	0.12	6.55	6.27	4.35	4.31	000
17306		A	3rd stage chemosurgery	2.85	3.62	3.10	1.39	1.23	0.12	6.59	6.07	4.36	4.20	000
17307		A	Followup skin lesion therapy	2.85	3.17	2.78	1.40	1.25	0.12	6.14	5.75	4.37	4.22	000
17310		A	Extensive skin chemosurgery	0.95	1.49	1.15	0.48	0.38	0.05	2.49	2.15	1.48	1.38	000
17340		A	Cryotherapy of skin	0.76	1.35	1.09	0.27	0.24	0.04	2.15	1.89	1.07	1.04	010
17360		A	Skin peel therapy	1.43	1.51	1.21	0.69	0.56	0.06	3.00	2.70	2.18	2.05	010
17380		R	Hair removal by electrolysis	0.00	0.00	0.00	0.00	0.00	0.00	0.00	0.00	0.00	0.00	XXX
17999		C	Skin tissue procedure	0.00	0.00	0.00	0.00	0.00	0.00	0.00	0.00	0.00	0.00	YYY
19000		A	Drainage of breast lesion	0.84	1.18	0.99	0.30	0.28	0.07	2.09	1.90	1.21	1.19	000
19001		A	Drain breast lesion add-on	0.42	0.79	0.66	0.15	0.15	0.03	1.24	1.11	0.60	0.60	ZZZ
19020		A	Incision of breast lesion	3.57	6.66	5.38	3.38	2.92	0.35	10.58	9.30	7.30	6.84	090
19030		A	Injection for breast x-ray	1.53	10.60	8.08	0.54	0.54	0.07	12.20	9.68	2.14	2.14	000
19100		A	Bx breast percut w/o image	1.27	3.33	2.67	0.46	0.43	0.10	4.70	4.04	1.83	1.80	000
19101		A	Biopsy of breast, open	3.18	9.82	8.00	2.97	2.86	0.20	13.20	11.38	6.35	6.24	010
19102		A	Bx breast percut w/image	2.00	4.58	4.58	0.73	0.73	0.08	6.66	6.66	2.81	2.81	000
19103		A	Bx breast percut w/device	2.37	10.83	10.83	0.86	0.86	0.08	13.28	13.28	3.31	3.31	000
19110		A	Nipple exploration	4.30	8.03	6.69	4.42	3.98	0.44	12.77	11.43	9.16	8.72	090
19112		A	Excise breast duct fistula	3.67	6.84	5.77	3.08	2.95	0.38	10.89	9.82	7.13	7.00	090
19120		A	Removal of breast lesion	5.56	4.41	4.10	3.62	3.50	0.56	10.53	10.22	9.74	9.62	090
19125		A	Excision, breast lesion	6.06	5.04	4.57	3.78	3.62	0.61	11.71	11.24	10.45	10.29	090
19126		A	Excision, addl breast lesion	2.93	NA	NA	1.11	1.23	0.30	NA	NA	4.34	4.46	ZZZ
19140		A	Removal of breast tissue	5.14	8.71	7.70	3.76	3.99	0.52	14.37	13.36	9.42	9.65	090
19160		A	Removal of breast tissue	5.99	NA	NA	4.56	4.54	0.61	NA	NA	11.16	11.14	090
19162		A	Remove breast tissue, nodes	13.53	NA	NA	8.08	8.61	1.38	NA	NA	22.99	23.52	090
19180		A	Removal of breast	8.80	NA	NA	6.01	6.03	0.88	NA	NA	15.69	15.71	090
19182		A	Removal of breast	7.73	NA	NA	5.06	5.44	0.79	NA	NA	13.58	13.96	090
19200		A	Removal of breast	15.49	NA	NA	9.47	9.88	1.51	NA	NA	26.47	26.88	090
19220		A	Removal of breast	15.72	NA	NA	9.40	9.96	1.56	NA	NA	26.68	27.24	090
19240		A	Removal of breast	16.00	NA	NA	9.00	9.31	1.62	NA	NA	26.62	26.93	090
19260		A	Removal of chest wall lesion	15.44	NA	NA	10.55	9.28	1.64	NA	NA	27.63	26.36	090
19271		A	Revision of chest wall	18.90	NA	NA	13.98	14.27	2.27	NA	NA	35.15	35.44	090
19272		A	Extensive chest wall surgery	21.55	NA	NA	15.55	15.08	2.54	NA	NA	39.64	39.17	090
19290		A	Place needle wire, breast	1.27	4.85	3.76	0.45	0.46	0.06	6.18	5.09	1.78	1.79	000
19291		A	Place needle wire, breast	0.63	1.65	1.31	0.22	0.23	0.03	2.31	1.97	0.88	0.89	ZZZ
19295		A	Place breast clip, percut	0.00	2.61	2.61	0.94	0.94	0.01	2.62	2.62	0.95	0.95	ZZZ
19316		A	Suspension of breast	10.69	NA	NA	7.63	8.91	1.15	NA	NA	19.47	20.75	090
19318		A	Reduction of large breast	15.62	NA	NA	10.48	11.71	1.69	NA	NA	27.79	29.02	090
19324		A	Enlarge breast	5.85	NA	NA	4.62	4.36	0.63	NA	NA	11.10	10.84	090
19325		A	Enlarge breast with implant	8.45	NA	NA	6.75	6.66	0.90	NA	NA	16.10	16.01	090
19328		A	Removal of breast implant	5.68	NA	NA	4.60	4.47	0.61	NA	NA	10.89	10.76	090
19330		A	Removal of implant material	7.59	NA	NA	5.33	5.05	0.81	NA	NA	13.73	13.45	090
19340		A	Immediate breast prosthesis	6.33	NA	NA	3.32	4.38	0.68	NA	NA	10.33	11.39	ZZZ
19342		A	Delayed breast prosthesis	11.20	NA	NA	7.96	8.90	1.21	NA	NA	20.37	21.31	090
19350		A	Breast reconstruction	8.92	13.94	12.38	6.87	7.07	0.95	23.81	22.25	16.74	16.94	090
19355		A	Correct inverted nipple(s)	7.57	11.53	9.99	5.94	5.79	0.80	19.90	18.36	14.31	14.16	090
19357		A	Breast reconstruction	18.16	NA	NA	13.92	13.74	1.96	NA	NA	34.04	33.86	090
19361		A	Breast reconstruction	19.26	NA	NA	12.29	14.68	2.08	NA	NA	33.63	36.02	090
19364		A	Breast reconstruction	41.00	NA	NA	22.88	21.69	3.91	NA	NA	67.79	66.60	090
19366		A	Breast reconstruction	21.28	NA	NA	12.38	13.74	2.27	NA	NA	35.93	37.29	090
19367		A	Breast reconstruction	25.73	NA	NA	15.65	17.20	2.78	NA	NA	44.16	45.71	090
19368		A	Breast reconstruction	32.42	NA	NA	19.45	20.05	3.51	NA	NA	55.38	55.98	090

[1] CPT codes and descriptions only are copyright 2000 American Medical Association. All Rights Reserved. Applicable FARS/DFARS Apply.
[2] Copyright 1994 American Dental Association. All rights reserved.
[3] + Indicates RVUs are not used for Medicare payment.
[4] PE RVUs = Practice Expense Relative Value Units.

ADDENDUM B.—RELATIVE VALUE UNITS (RVU'S) AND RELATED INFORMATION—Continued

CPT[1]/ HCPCS[2]	MOD	Status	Description	Physician Work RVUs[3]	Fully Implemented Non-Facility PE RVUs	Year 2001 Transitional Non-Facility PE RVUs	Fully Implemented Facility PE RVUs	Year 2001 Transitional Facility PE RVUs	Mal-Practice RVUs	Fully Implemented Non-Facility Total	Year 2001 Transitional Non-Facility Total	Fully Implemented Facility Total	Year 2001 Transitional Facility Total	Global
19369		A	Breast reconstruction	29.82	NA	NA	18.59	19.41	3.24	NA	NA	51.65	52.47	090
19370		A	Surgery of breast capsule	8.05	NA	NA	6.16	6.30	0.86	NA	NA	15.07	15.21	090
19371		A	Removal of breast capsule	9.35	NA	NA	7.26	7.59	1.01	NA	NA	17.62	17.95	090
19380		A	Revise breast reconstruction	9.14	NA	NA	7.15	7.56	0.98	NA	NA	17.27	17.68	090
19396		A	Design custom breast implant	2.17	4.99	4.17	0.80	1.03	0.23	7.39	6.57	3.20	3.43	000
19499		C	Breast surgery procedure	0.00	0.00	0.00	0.00	0.00	0.00	0.00	0.00	0.00	0.00	YYY
20000		A	Incision of abscess	2.12	1.94	1.69	1.18	1.00	0.17	4.23	3.98	3.47	3.29	010
20005		A	Incision of deep abscess	3.42	2.81	2.61	2.22	2.16	0.34	6.57	6.37	5.98	5.92	010
20100		A	Explore wound, neck	10.08	6.00	5.85	4.65	4.84	0.99	17.07	16.92	15.72	15.91	010
20101		A	Explore wound, chest	3.22	3.04	2.71	1.36	1.45	0.24	6.50	6.17	4.82	4.91	010
20102		A	Explore wound, abdomen	3.94	3.36	3.04	1.71	1.80	0.35	7.65	7.33	6.00	6.09	010
20103		A	Explore wound, extremity	5.30	4.12	3.79	3.02	2.97	0.57	9.99	9.66	8.89	8.84	010
20150		A	Excise epiphyseal bar	13.69	NA	NA	7.66	9.11	0.96	NA	NA	22.31	23.76	090
20200		A	Muscle biopsy	1.46	1.70	1.58	0.64	0.79	0.17	3.33	3.21	2.27	2.42	000
20205		A	Deep muscle biopsy	2.35	3.53	3.16	1.00	1.26	0.23	6.11	5.74	3.58	3.84	000
20206		A	Needle biopsy, muscle	0.99	3.02	2.53	0.36	0.53	0.06	4.07	3.58	1.41	1.58	000
20220		A	Bone biopsy, trocar/needle	1.27	4.78	3.94	2.87	2.51	0.06	6.11	5.27	4.20	3.84	000
20225		A	Bone biopsy, trocar/needle	1.87	4.28	3.86	2.85	2.70	0.11	6.26	5.84	4.83	4.68	000
20240		A	Bone biopsy, excisional	3.23	NA	NA	4.11	3.59	0.33	NA	NA	7.67	7.15	010
20245		A	Bone biopsy, excisional	3.95	NA	NA	4.69	4.49	0.44	NA	NA	9.08	8.88	010
20250		A	Open bone biopsy	5.03	NA	NA	4.29	4.59	0.50	NA	NA	9.82	10.12	010
20251		A	Open bone biopsy	5.56	NA	NA	4.72	5.13	0.79	NA	NA	11.07	11.48	010
20500		A	Injection of sinus tract	1.23	5.19	3.99	3.76	2.87	0.10	6.52	5.32	5.09	4.20	010
20501		A	Inject sinus tract for x-ray	0.76	12.72	9.62	0.27	0.29	0.03	13.51	10.41	1.06	1.08	000
20520		A	Removal of foreign body	1.85	5.22	4.11	3.33	2.60	0.17	7.24	6.13	5.35	4.62	010
20525		A	Removal of foreign body	3.50	6.39	5.40	4.14	3.71	0.40	10.29	9.30	8.04	7.61	010
20550		A	Inject tendon/ligament/cyst	0.86	1.96	1.57	0.22	0.22	0.06	2.88	2.49	1.14	1.14	000
20600		A	Drain/inject, joint/bursa	0.66	1.35	1.14	0.27	0.27	0.06	2.07	1.86	0.99	0.99	000
20605		A	Drain/inject, joint/bursa	0.68	1.68	1.38	0.27	0.27	0.06	2.42	2.12	1.01	1.01	000
20610		A	Drain/inject, joint/bursa	0.79	2.08	1.68	0.55	0.48	0.08	2.95	2.55	1.42	1.35	000
20615		A	Treatment of bone cyst	2.28	4.45	3.47	2.46	1.91	0.19	6.92	5.94	4.93	4.38	010
20650		A	Insert and remove bone pin	2.23	4.30	3.52	2.88	2.45	0.28	6.81	6.03	5.39	4.96	010
20660		A	Apply,remove fixation device	2.51	NA	NA	1.47	1.53	0.48	NA	NA	4.46	4.52	000
20661		A	Application of head brace	4.89	NA	NA	6.52	5.93	0.92	NA	NA	12.33	11.74	090
20662		A	Application of pelvis brace	6.07	NA	NA	5.11	5.61	0.81	NA	NA	11.99	12.49	090
20663		A	Application of thigh brace	5.43	NA	NA	4.75	4.82	0.77	NA	NA	10.95	11.02	090
20664		A	Halo brace application	8.06	NA	NA	8.25	7.23	1.49	NA	NA	17.80	16.78	090
20665		A	Removal of fixation device	1.31	2.20	1.79	1.23	1.06	0.17	3.68	3.27	2.71	2.54	010
20670		A	Removal of support implant	1.74	5.50	4.33	3.43	2.67	0.23	7.47	6.30	5.40	4.64	010
20680		A	Removal of support implant	3.35	5.02	4.67	5.02	4.67	0.46	8.83	8.48	8.83	8.48	090
20690		A	Apply bone fixation device	3.52	NA	NA	1.88	2.40	0.47	NA	NA	5.87	6.39	090
20692		A	Apply bone fixation device	6.41	NA	NA	2.49	3.36	0.60	NA	NA	9.50	10.37	090
20693		A	Adjust bone fixation device	5.86	NA	NA	11.60	9.38	0.85	NA	NA	18.31	16.09	090
20694		A	Remove bone fixation device	4.16	8.17	6.83	5.77	5.03	0.57	12.90	11.56	10.50	9.76	090
20802		A	Replantation, arm, complete	41.15	NA	NA	27.94	31.19	5.81	NA	NA	74.90	78.15	090
20805		A	Replant, forearm, complete	50.00	NA	NA	50.26	50.22	3.95	NA	NA	104.21	104.17	090
20808		A	Replantation hand, complete	61.65	NA	NA	43.46	48.17	6.49	NA	NA	111.60	116.31	090
20816		A	Replantation digit, complete	30.94	NA	NA	42.68	39.69	3.01	NA	NA	76.63	73.64	090
20822		A	Replantation digit, complete	25.59	NA	NA	39.15	35.71	3.07	NA	NA	67.81	64.37	090
20824		A	Replantation thumb, complete	30.94	NA	NA	36.49	35.05	3.48	NA	NA	70.91	69.47	090
20827		A	Replantation thumb, complete	26.41	NA	NA	45.63	40.75	3.21	NA	NA	75.25	70.37	090
20838		A	Replantation foot, complete	41.41	NA	NA	28.37	31.51	5.85	NA	NA	75.63	78.77	090
20900		A	Removal of bone for graft	5.58	6.70	5.79	5.81	5.12	0.77	13.05	12.14	12.16	11.47	090
20902		A	Removal of bone for graft	7.55	NA	NA	8.28	7.55	1.06	NA	NA	16.89	16.16	090
20910		A	Remove cartilage for graft	5.34	8.05	6.25	6.51	5.10	0.50	13.89	12.09	12.35	10.94	090
20912		A	Remove cartilage for graft	6.35	NA	NA	7.26	6.70	0.55	NA	NA	14.16	13.60	090
20920		A	Removal of fascia for graft	5.31	NA	NA	5.42	5.13	0.54	NA	NA	11.27	10.98	090
20922		A	Removal of fascia for graft	6.61	8.54	7.60	6.14	5.80	0.88	16.03	15.09	13.63	13.29	090
20924		A	Removal of tendon for graft	6.48	NA	NA	6.62	6.44	0.82	NA	NA	13.92	13.74	090
20926		A	Removal of tissue for graft	5.53	NA	NA	6.15	5.32	0.73	NA	NA	12.41	11.58	090
20930		B	Spinal bone allograft	0.00	0.00	0.00	0.00	0.00	0.00	0.00	0.00	0.00	0.00	XXX
20931		A	Spinal bone allograft	1.81	NA	NA	0.96	1.19	0.34	NA	NA	3.11	3.34	ZZZ
20936		B	Spinal bone autograft	0.00	0.00	0.00	0.00	0.00	0.00	0.00	0.00	0.00	0.00	XXX
20937		A	Spinal bone autograft	2.79	NA	NA	1.52	1.86	0.43	NA	NA	4.74	5.08	ZZZ
20938		A	Spinal bone autograft	3.02	NA	NA	1.62	2.00	0.52	NA	NA	5.16	5.54	ZZZ
20950		A	Fluid pressure, muscle	1.26	NA	NA	2.08	1.86	0.16	NA	NA	3.50	3.28	000
20955		A	Fibula bone graft, microvasc	39.21	NA	NA	29.43	31.80	4.35	NA	NA	72.99	75.36	090
20956		A	Iliac bone graft, microvasc	39.27	NA	NA	28.36	28.57	5.77	NA	NA	73.40	73.61	090
20957		A	Mt bone graft, microvasc	40.65	NA	NA	24.17	25.69	5.74	NA	NA	70.56	72.08	090
20962		A	Other bone graft, microvasc	39.27	NA	NA	28.68	28.81	5.19	NA	NA	73.14	73.27	090
20969		A	Bone/skin graft, microvasc	43.92	NA	NA	32.20	35.04	4.34	NA	NA	80.46	83.30	090
20970		A	Bone/skin graft, iliac crest	43.06	NA	NA	29.96	33.14	4.64	NA	NA	77.66	80.84	090
20972		A	Bone/skin graft, metatarsal	42.99	NA	NA	18.72	24.79	6.07	NA	NA	67.78	73.85	090
20973		A	Bone/skin graft, great toe	45.76	NA	NA	22.14	28.07	4.65	NA	NA	72.55	78.48	090
20974		A	Electrical bone stimulation	0.62	0.38	1.21	0.34	0.72	0.09	1.09	1.92	1.05	1.43	000
20975		A	Electrical bone stimulation	2.60	NA	NA	1.41	1.83	0.42	NA	NA	4.43	4.85	000
20979		A	Us bone stimulation	0.62	0.57	0.57	0.25	0.25	0.04	1.23	1.23	0.91	0.91	000
20999		C	Musculoskeletal surgery	0.00	0.00	0.00	0.00	0.00	0.00	0.00	0.00	0.00	0.00	YYY
21010		A	Incision of jaw joint	10.14	NA	NA	6.96	8.00	0.54	NA	NA	17.64	18.68	090
21015		A	Resection of facial tumor	5.29	NA	NA	6.95	6.79	0.52	NA	NA	12.76	12.60	090
21025		A	Excision of bone, lower jaw	10.06	7.37	6.65	6.86	5.71	0.79	18.22	17.50	17.71	16.56	090
21026		A	Excision of facial bone(s)	4.85	5.45	4.94	4.79	4.02	0.40	10.70	10.19	10.04	9.27	090
21029		A	Contour of face bone lesion	7.71	6.81	7.41	6.04	5.68	0.74	15.26	15.86	14.49	14.13	090

[1] CPT codes and descriptions only are copyright 2000 American Medical Association. All Rights Reserved. Applicable FARS/DFARS Apply.
[2] Copyright 1994 American Dental Association. All rights reserved.
[3] + Indicates RVUs are not used for Medicare payment.
[4] PE RVUs = Practice Expense Relative Value Units.

ADDENDUM B.—RELATIVE VALUE UNITS (RVU'S) AND RELATED INFORMATION—Continued

CPT[1]/ HCPCS[2]	MOD	Status	Description	Physician Work RVUs[3]	Fully Implemented Non-Facility PE RVUs	Year 2001 Transitional Non-Facility PE RVUs	Fully Implemented Facility PE RVUs	Year 2001 Transitional Facility PE RVUs	Mal-Practice RVUs	Fully Implemented Non-Facility Total	Year 2001 Transitional Non-Facility Total	Fully Implemented Facility Total	Year 2001 Transitional Facility Total	Global
21030		A	Removal of face bone lesion	6.46	5.37	4.94	4.87	4.11	0.60	12.43	12.00	11.93	11.17	090
21031		A	Remove exostosis, mandible	3.24	3.33	3.50	2.11	2.08	0.28	6.85	7.02	5.63	5.60	090
21032		A	Remove exostosis, maxilla	3.24	3.29	3.52	2.16	2.15	0.27	6.80	7.03	5.67	5.66	090
21034		A	Removal of face bone lesion	16.17	11.88	10.81	10.61	9.85	1.37	29.42	28.35	28.15	27.39	090
21040		A	Removal of jaw bone lesion	2.11	2.97	2.98	1.86	1.77	0.19	5.27	5.28	4.16	4.07	090
21041		A	Removal of jaw bone lesion	6.71	5.59	5.76	4.35	4.05	0.56	12.86	13.03	11.62	11.32	090
21044		A	Removal of jaw bone lesion	11.86	NA	NA	7.90	8.52	0.87	NA	NA	20.63	21.25	090
21045		A	Extensive jaw surgery	16.17	NA	NA	10.26	11.45	1.20	NA	NA	27.63	28.82	090
21050		A	Removal of jaw joint	10.77	NA	NA	11.22	11.63	0.84	NA	NA	22.83	23.24	090
21060		A	Remove jaw joint cartilage	10.23	NA	NA	10.06	10.60	1.16	NA	NA	21.45	21.99	090
21070		A	Remove coronoid process	8.20	NA	NA	6.07	6.40	0.67	NA	NA	14.94	15.27	090
21076		A	Prepare face/oral prosthesis	13.42	9.75	11.32	7.34	7.51	1.36	24.53	26.10	22.12	22.29	010
21077		A	Prepare face/oral prosthesis	33.75	24.53	28.47	18.46	18.88	3.43	61.71	65.65	55.64	56.06	090
21079		A	Prepare face/oral prosthesis	22.34	17.32	20.57	12.77	13.37	1.59	41.25	44.50	36.70	37.30	090
21080		A	Prepare face/oral prosthesis	25.10	19.47	23.12	14.35	15.02	2.55	47.12	50.77	42.00	42.67	090
21081		A	Prepare face/oral prosthesis	22.88	17.74	21.06	13.08	13.69	1.87	42.49	45.81	37.83	38.44	090
21082		A	Prepare face/oral prosthesis	20.87	15.17	17.61	11.42	11.68	1.46	37.50	39.94	33.75	34.01	090
21083		A	Prepare face/oral prosthesis	19.30	14.97	17.78	11.03	11.55	1.96	36.23	39.04	32.29	32.81	090
21084		A	Prepare face/oral prosthesis	22.51	17.45	20.72	12.87	13.47	1.57	41.53	44.80	36.95	37.55	090
21085		A	Prepare face/oral prosthesis	9.00	6.53	7.58	4.93	5.04	0.65	16.18	17.23	14.58	14.69	010
21086		A	Prepare face/oral prosthesis	24.92	19.33	22.95	14.25	14.92	1.86	46.11	49.73	41.03	41.70	090
21087		A	Prepare face/oral prosthesis	24.92	18.10	21.01	13.64	13.95	2.22	45.24	48.15	40.78	41.09	090
21088		C	Prepare face/oral prosthesis	0.00	0.00	0.00	0.00	0.00	0.00	0.00	0.00	0.00	0.00	090
21089		C	Prepare face/oral prosthesis	0.00	0.00	0.00	0.00	0.00	0.00	0.00	0.00	0.00	0.00	090
21100		A	Maxillofacial fixation	4.22	5.87	4.69	4.00	3.29	0.18	10.27	9.09	8.40	7.69	090
21110		A	Interdental fixation	5.21	5.21	5.41	4.54	4.16	0.28	10.70	10.90	10.03	9.65	090
21116		A	Injection, jaw joint x-ray	0.81	7.87	6.10	0.31	0.43	0.05	8.73	6.96	1.17	1.29	000
21120		A	Reconstruction of chin	4.93	10.28	8.69	6.23	5.65	0.29	15.50	13.91	11.45	10.87	090
21121		A	Reconstruction of chin	7.64	8.07	7.59	5.81	5.89	0.56	16.27	15.79	14.01	14.09	090
21122		A	Reconstruction of chin	8.52	NA	NA	7.37	7.22	0.59	NA	NA	16.48	16.33	090
21123		A	Reconstruction of chin	11.16	NA	NA	8.46	8.55	1.16	NA	NA	20.78	20.87	090
21125		A	Augmentation, lower jaw bone	10.62	9.06	8.08	8.64	7.76	0.72	20.40	19.42	19.98	19.10	090
21127		A	Augmentation, lower jaw bone	11.12	9.54	9.30	6.73	7.19	0.76	21.42	21.18	18.61	19.07	090
21137		A	Reduction of forehead	9.82	NA	NA	7.11	7.26	0.53	NA	NA	17.46	17.61	090
21138		A	Reduction of forehead	12.19	NA	NA	9.81	9.76	1.47	NA	NA	23.47	23.42	090
21139		A	Reduction of forehead	14.61	NA	NA	9.37	9.92	1.02	NA	NA	25.00	25.55	090
21141		A	Reconstruct midface, lefort	18.10	NA	NA	11.10	12.22	1.63	NA	NA	30.83	31.95	090
21142		A	Reconstruct midface, lefort	18.81	NA	NA	11.26	12.47	1.16	NA	NA	31.23	32.44	090
21143		A	Reconstruct midface, lefort	19.58	NA	NA	11.26	12.62	0.90	NA	NA	31.74	33.10	090
21145		A	Reconstruct midface, lefort	19.94	NA	NA	11.47	12.49	2.09	NA	NA	33.50	34.52	090
21146		A	Reconstruct midface, lefort	20.71	NA	NA	12.11	13.11	2.13	NA	NA	34.95	35.95	090
21147		A	Reconstruct midface, lefort	21.77	NA	NA	13.29	14.15	1.52	NA	NA	36.58	37.44	090
21150		A	Reconstruct midface, lefort	25.24	NA	NA	14.79	16.10	1.09	NA	NA	41.12	42.43	090
21151		A	Reconstruct midface, lefort	28.30	NA	NA	18.36	19.38	1.98	NA	NA	48.64	49.66	090
21154		A	Reconstruct midface, lefort	30.52	NA	NA	18.36	19.78	4.86	NA	NA	53.74	55.16	090
21155		A	Reconstruct midface, lefort	34.45	NA	NA	18.36	20.58	5.48	NA	NA	58.29	60.51	090
21159		A	Reconstruct midface, lefort	42.38	NA	NA	21.53	24.56	6.74	NA	NA	70.65	73.68	090
21160		A	Reconstruct midface, lefort	46.44	NA	NA	24.59	27.66	4.39	NA	NA	75.42	78.49	090
21172		A	Reconstruct orbit/forehead	27.80	NA	NA	18.52	19.40	1.91	NA	NA	48.23	49.11	090
21175		A	Reconstruct orbit/forehead	33.17	NA	NA	18.89	20.78	5.16	NA	NA	57.22	59.11	090
21179		A	Reconstruct entire forehead	22.25	NA	NA	18.57	18.33	2.48	NA	NA	43.30	43.06	090
21180		A	Reconstruct entire forehead	25.19	NA	NA	18.88	19.17	2.15	NA	NA	46.22	46.51	090
21181		A	Contour cranial bone lesion	9.90	NA	NA	8.73	8.48	0.97	NA	NA	19.60	19.35	090
21182		A	Reconstruct cranial bone	32.19	NA	NA	22.46	23.26	2.53	NA	NA	57.18	57.98	090
21183		A	Reconstruct cranial bone	35.31	NA	NA	23.72	24.80	2.75	NA	NA	61.78	62.86	090
21184		A	Reconstruct cranial bone	38.24	NA	NA	21.55	23.78	4.12	NA	NA	63.91	66.14	090
21188		A	Reconstruction of midface	22.46	NA	NA	15.60	16.11	1.85	NA	NA	39.91	40.42	090
21193		A	Reconst lwr jaw w/o graft	17.15	NA	NA	10.99	11.58	1.53	NA	NA	29.67	30.26	090
21194		A	Reconst lwr jaw w/graft	19.84	NA	NA	12.06	12.92	1.39	NA	NA	33.29	34.15	090
21195		A	Reconst lwr jaw w/o fixation	17.24	NA	NA	12.93	13.05	1.20	NA	NA	31.37	31.49	090
21196		A	Reconst lwr jaw w/fixation	18.91	NA	NA	12.84	13.32	1.62	NA	NA	33.37	33.85	090
21198		A	Reconstr lwr jaw segment	14.16	NA	NA	11.81	12.88	1.05	NA	NA	27.02	28.09	090
21199		A	Reconstr lwr jaw w/advance	16.00	NA	NA	10.53	10.53	1.00	NA	NA	27.53	27.53	090
21206		A	Reconstruct upper jaw bone	14.10	NA	NA	10.08	10.31	1.01	NA	NA	25.19	25.42	090
21208		A	Augmentation of facial bones	10.23	9.92	10.49	8.37	9.33	0.92	21.07	21.64	19.52	20.48	090
21209		A	Reduction of facial bones	6.72	8.72	7.79	5.68	5.51	0.60	16.04	15.11	13.00	12.83	090
21210		A	Face bone graft	10.23	8.85	9.69	7.95	7.49	0.88	19.96	20.80	19.06	18.60	090
21215		A	Lower jaw bone graft	10.77	8.66	9.71	6.88	6.77	1.04	20.47	21.52	18.69	18.58	090
21230		A	Rib cartilage graft	10.77	NA	NA	10.09	10.38	0.96	NA	NA	21.82	22.11	090
21235		A	Ear cartilage graft	6.72	11.59	10.70	7.92	7.95	0.52	18.83	17.94	15.16	15.19	090
21240		A	Reconstruction of jaw joint	14.05	NA	NA	11.45	12.78	1.15	NA	NA	26.65	27.98	090
21242		A	Reconstruction of jaw joint	12.95	NA	NA	11.47	12.47	1.40	NA	NA	25.82	26.82	090
21243		A	Reconstruction of jaw joint	20.79	NA	NA	14.68	14.92	1.85	NA	NA	37.32	37.56	090
21244		A	Reconstruction of lower jaw	11.86	NA	NA	9.00	10.29	0.95	NA	NA	21.81	23.10	090
21245		A	Reconstruction of jaw	11.86	16.50	15.49	10.10	10.69	0.88	29.24	28.23	22.84	23.43	090
21246		A	Reconstruction of jaw	12.47	12.41	11.70	10.75	10.46	1.21	26.09	25.38	24.43	24.14	090
21247		A	Reconstruct lower jaw bone	22.63	NA	NA	18.73	20.80	2.21	NA	NA	43.57	45.64	090
21248		A	Reconstruction of jaw	11.48	8.79	10.02	7.96	7.69	1.01	21.28	22.51	20.45	20.18	090
21249		A	Reconstruction of jaw	17.52	11.31	13.71	10.15	10.23	1.39	30.22	32.62	29.06	29.14	090
21255		A	Reconstruct lower jaw bone	16.72	NA	NA	10.92	13.18	1.13	NA	NA	28.77	31.03	090
21256		A	Reconstruction of orbit	16.19	NA	NA	13.34	14.84	1.04	NA	NA	30.57	32.07	090
21260		A	Revise eye sockets	16.52	NA	NA	11.45	13.52	1.25	NA	NA	29.22	31.29	090
21261		A	Revise eye sockets	31.49	NA	NA	19.08	19.14	2.20	NA	NA	52.77	52.83	090

[1] CPT codes and descriptions only are copyright 2000 American Medical Association. All Rights Reserved. Applicable FARS/DFARS Apply.
[2] Copyright 1994 American Dental Association. All rights reserved.
[3] + Indicates RVUs are not used for Medicare payment.
[4] PE RVUs = Practice Expense Relative Value Units.

ADDENDUM B.—RELATIVE VALUE UNITS (RVU'S) AND RELATED INFORMATION—Continued

CPT[1]/ HCPCS[2]	MOD	Status	Description	Physician Work RVUs[3]	Fully Implemented Non-Facility PE RVUs	Year 2001 Transitional Non-Facility PE RVUs	Fully Implemented Facility PE RVUs	Year 2001 Transitional Facility PE RVUs	Mal-Practice RVUs	Fully Implemented Non-Facility Total	Year 2001 Transitional Non-Facility Total	Fully Implemented Facility Total	Year 2001 Transitional Facility Total	Global
21263		A	Revise eye sockets	28.42	NA	NA	14.95	19.70	2.16	NA	NA	45.53	50.28	090
21267		A	Revise eye sockets	18.90	NA	NA	14.53	14.86	1.35	NA	NA	34.78	35.11	090
21268		A	Revise eye sockets	24.48	NA	NA	12.60	13.62	0.79	NA	NA	37.87	38.89	090
21270		A	Augmentation, cheek bone	10.23	10.37	10.38	9.16	9.48	0.73	21.33	21.34	20.12	20.44	090
21275		A	Revision, orbitofacial bones	11.24	NA	NA	11.10	10.75	1.03	NA	NA	23.37	23.02	090
21280		A	Revision of eyelid	6.03	NA	NA	6.22	6.47	0.27	NA	NA	12.52	12.77	090
21282		A	Revision of eyelid	3.49	NA	NA	5.20	4.94	0.21	NA	NA	8.90	8.64	090
21295		A	Revision of jaw muscle/bone	1.53	NA	NA	3.62	2.98	0.13	NA	NA	5.28	4.64	090
21296		A	Revision of jaw muscle/bone	4.25	NA	NA	5.20	4.88	0.30	NA	NA	9.75	9.43	090
21299		C	Cranio/maxillofacial surgery	0.00	0.00	0.00	0.00	0.00	0.00	0.00	0.00	0.00	0.00	YYY
21300		A	Treatment of skull fracture	0.72	2.34	2.01	0.27	0.42	0.09	3.15	2.82	1.08	1.23	000
21310		A	Treatment of nose fracture	0.58	2.54	2.11	0.15	0.29	0.05	3.17	2.74	0.78	0.92	000
21315		A	Treatment of nose fracture	1.51	3.29	2.96	1.24	1.38	0.12	4.92	4.59	2.87	3.01	010
21320		A	Treatment of nose fracture	1.85	4.82	4.25	1.98	2.04	0.15	6.82	6.25	3.98	4.04	010
21325		A	Treatment of nose fracture	3.77	NA	NA	3.66	3.86	0.31	NA	NA	7.74	7.94	090
21330		A	Treatment of nose fracture	5.38	NA	NA	5.41	5.66	0.48	NA	NA	11.27	11.52	090
21335		A	Treatment of nose fracture	8.61	NA	NA	7.04	7.85	0.64	NA	NA	16.29	17.10	090
21336		A	Treat nasal septal fracture	5.72	NA	NA	5.44	5.19	0.45	NA	NA	11.61	11.36	090
21337		A	Treat nasal septal fracture	2.70	4.98	4.50	3.12	3.11	0.22	7.90	7.42	6.04	6.03	090
21338		A	Treat nasoethmoid fracture	6.46	NA	NA	5.88	5.77	0.53	NA	NA	12.87	12.76	090
21339		A	Treat nasoethmoid fracture	8.09	NA	NA	6.85	7.06	0.76	NA	NA	15.70	15.91	090
21340		A	Treatment of nose fracture	10.77	NA	NA	9.26	9.36	0.85	NA	NA	20.88	20.98	090
21343		A	Treatment of sinus fracture	12.95	NA	NA	9.93	9.94	1.06	NA	NA	23.94	23.95	090
21344		A	Treatment of sinus fracture	19.72	NA	NA	13.34	12.49	1.72	NA	NA	34.78	33.93	090
21345		A	Treat nose/jaw fracture	8.16	8.74	8.70	7.41	7.70	0.60	17.50	17.46	16.17	16.46	090
21346		A	Treat nose/jaw fracture	10.61	NA	NA	10.26	10.25	0.85	NA	NA	21.72	21.71	090
21347		A	Treat nose/jaw fracture	12.69	NA	NA	9.31	9.79	1.14	NA	NA	23.14	23.62	090
21348		A	Treat nose/jaw fracture	16.69	NA	NA	10.25	10.77	1.50	NA	NA	28.44	28.96	090
21355		A	Treat cheek bone fracture	3.77	4.79	4.02	2.40	2.22	0.29	8.85	8.08	6.46	6.28	010
21356		A	Treat cheek bone fracture	4.15	NA	NA	3.22	3.66	0.36	NA	NA	7.73	8.17	010
21360		A	Treat cheek bone fracture	6.46	NA	NA	5.72	6.22	0.52	NA	NA	12.70	13.20	090
21365		A	Treat cheek bone fracture	14.95	NA	NA	11.28	11.81	1.30	NA	NA	27.53	28.06	090
21366		A	Treat cheek bone fracture	17.77	NA	NA	12.09	12.35	1.41	NA	NA	31.27	31.53	090
21385		A	Treat eye socket fracture	9.16	NA	NA	7.68	8.36	0.64	NA	NA	17.48	18.16	090
21386		A	Treat eye socket fracture	9.16	NA	NA	7.98	8.45	0.76	NA	NA	17.90	18.37	090
21387		A	Treat eye socket fracture	9.70	NA	NA	8.14	8.13	0.78	NA	NA	18.62	18.61	090
21390		A	Treat eye socket fracture	10.13	NA	NA	8.49	9.39	0.70	NA	NA	19.32	20.22	090
21395		A	Treat eye socket fracture	12.68	NA	NA	9.99	10.11	1.09	NA	NA	23.76	23.88	090
21400		A	Treat eye socket fracture	1.40	2.92	2.64	1.08	1.23	0.12	4.44	4.16	2.60	2.75	090
21401		A	Treat eye socket fracture	3.26	5.56	4.87	3.19	3.09	0.34	9.16	8.47	6.79	6.69	090
21406		A	Treat eye socket fracture	7.01	NA	NA	6.51	6.30	0.59	NA	NA	14.11	13.90	090
21407		A	Treat eye socket fracture	8.61	NA	NA	7.74	7.73	0.67	NA	NA	17.02	17.01	090
21408		A	Treat eye socket fracture	12.38	NA	NA	9.63	9.53	1.24	NA	NA	23.25	23.15	090
21421		A	Treat mouth roof fracture	5.14	7.37	7.19	6.29	6.25	0.42	12.93	12.75	11.85	11.81	090
21422		A	Treat mouth roof fracture	8.32	NA	NA	7.13	7.83	0.69	NA	NA	16.14	16.84	090
21423		A	Treat mouth roof fracture	10.40	NA	NA	8.10	8.74	0.95	NA	NA	19.45	20.09	090
21431		A	Treat craniofacial fracture	7.05	NA	NA	5.28	5.59	0.58	NA	NA	12.91	13.22	090
21432		A	Treat craniofacial fracture	8.61	NA	NA	7.28	7.30	0.55	NA	NA	16.44	16.46	090
21433		A	Treat craniofacial fracture	25.35	NA	NA	17.70	18.15	2.46	NA	NA	45.51	45.96	090
21435		A	Treat craniofacial fracture	17.25	NA	NA	11.67	12.35	1.66	NA	NA	30.58	31.26	090
21436		A	Treat craniofacial fracture	28.04	NA	NA	18.85	18.11	2.32	NA	NA	49.21	48.47	090
21440		A	Treat dental ridge fracture	2.70	5.34	4.84	3.37	3.33	0.22	8.26	7.76	6.29	6.25	090
21445		A	Treat dental ridge fracture	5.38	6.92	6.85	5.27	5.56	0.55	12.85	12.78	11.20	11.49	090
21450		A	Treat lower jaw fracture	2.97	6.53	5.67	2.67	2.77	0.23	9.73	8.87	5.87	5.97	090
21451		A	Treat lower jaw fracture	4.87	6.51	6.47	5.49	5.57	0.39	11.77	11.73	10.75	10.83	090
21452		A	Treat lower jaw fracture	1.98	8.85	7.02	3.80	3.23	0.14	10.97	9.14	5.92	5.35	090
21453		A	Treat lower jaw fracture	5.54	7.43	7.38	6.20	6.30	0.49	13.46	13.41	12.23	12.33	090
21454		A	Treat lower jaw fracture	6.46	NA	NA	5.93	6.38	0.55	NA	NA	12.94	13.39	090
21461		A	Treat lower jaw fracture	8.09	9.57	9.59	7.73	8.21	0.73	18.39	18.41	16.55	17.03	090
21462		A	Treat lower jaw fracture	9.79	10.92	11.11	7.87	8.83	0.80	21.51	21.70	18.46	19.42	090
21465		A	Treat lower jaw fracture	11.91	NA	NA	7.39	7.83	0.84	NA	NA	20.14	20.58	090
21470		A	Treat lower jaw fracture	15.34	NA	NA	9.78	11.91	1.36	NA	NA	26.48	28.61	090
21480		A	Reset dislocated jaw	0.61	1.58	1.40	0.18	0.32	0.05	2.24	2.06	0.84	0.98	000
21485		A	Reset dislocated jaw	3.99	3.80	3.45	3.49	2.92	0.31	8.10	7.75	7.79	7.22	090
21490		A	Repair dislocated jaw	11.86	NA	NA	7.45	7.30	1.31	NA	NA	20.62	20.47	090
21493		A	Treat hyoid bone fracture	1.27	NA	NA	3.05	2.67	0.10	NA	NA	4.42	4.04	090
21494		A	Treat hyoid bone fracture	6.28	NA	NA	5.24	5.97	0.44	NA	NA	11.96	12.69	090
21495		A	Treat hyoid bone fracture	5.69	NA	NA	4.80	4.91	0.41	NA	NA	10.90	11.01	090
21497		A	Interdental wiring	3.86	4.72	4.62	3.78	3.91	0.31	8.89	8.79	7.95	8.08	090
21499		C	Head surgery procedure	0.00	0.00	0.00	0.00	0.00	0.00	0.00	0.00	0.00	0.00	YYY
21501		A	Drain neck/chest lesion	3.81	4.15	3.61	3.64	3.23	0.36	8.32	7.78	7.81	7.40	090
21502		A	Drain chest lesion	7.12	NA	NA	8.58	7.58	0.79	NA	NA	16.49	15.49	090
21510		A	Drainage of bone lesion	5.74	NA	NA	8.10	7.11	0.67	NA	NA	14.51	13.52	090
21550		A	Biopsy of neck/chest	2.06	2.27	1.93	1.24	1.05	0.13	4.46	4.12	3.43	3.24	010
21555		A	Remove lesion, neck/chest	4.35	4.17	3.56	2.54	2.34	0.41	8.93	8.32	7.30	7.10	090
21556		A	Remove lesion, neck/chest	5.57	NA	NA	3.31	3.51	0.51	NA	NA	9.39	9.59	090
21557		A	Remove tumor, neck/chest	8.88	NA	NA	8.03	8.33	0.85	NA	NA	17.76	18.06	090
21600		A	Partial removal of rib	6.89	NA	NA	8.77	7.80	0.81	NA	NA	16.47	15.50	090
21610		A	Partial removal of rib	14.61	NA	NA	10.79	9.50	1.85	NA	NA	27.25	25.96	090
21615		A	Removal of rib	9.87	NA	NA	9.65	9.99	1.20	NA	NA	20.72	21.06	090
21616		A	Removal of rib and nerves	12.04	NA	NA	9.02	8.74	1.31	NA	NA	22.37	22.09	090
21620		A	Partial removal of sternum	6.79	NA	NA	8.89	8.53	0.77	NA	NA	16.45	16.09	090
21627		A	Sternal debridement	6.81	NA	NA	15.57	13.04	0.82	NA	NA	23.20	20.67	090

[1] CPT codes and descriptions only are copyright 2000 American Medical Association. All Rights Reserved. Applicable FARS/DFARS Apply.
[2] Copyright 1994 American Dental Association. All rights reserved.
[3] + Indicates RVUs are not used for Medicare payment.
[4] PE RVUs = Practice Expense Relative Value Units.

ADDENDUM B.—RELATIVE VALUE UNITS (RVU'S) AND RELATED INFORMATION—Continued

CPT[1]/ HCPCS[2]	MOD	Status	Description	Physician Work RVUs[3]	Fully Implemented Non-Facility PE RVUs	Year 2001 Transitional Non-Facility PE RVUs	Fully Implemented Facility PE RVUs	Year 2001 Transitional Facility PE RVUs	Mal-Practice RVUs	Fully Implemented Non-Facility Total	Year 2001 Transitional Non-Facility Total	Fully Implemented Facility Total	Year 2001 Transitional Facility Total	Global
21630		A	Extensive sternum surgery	17.38	NA	NA	14.42	14.31	1.95	NA	NA	33.75	33.64	090
21632		A	Extensive sternum surgery	18.14	NA	NA	15.62	14.85	2.16	NA	NA	35.92	35.15	090
21700		A	Revision of neck muscle	6.19	8.78	7.71	7.38	6.66	0.31	15.28	14.21	13.88	13.16	090
21705		A	Revision of neck muscle/rib	9.60	NA	NA	7.70	7.09	0.92	NA	NA	18.22	17.61	090
21720		A	Revision of neck muscle	5.68	7.31	6.53	7.27	6.50	0.80	13.79	13.01	13.75	12.98	090
21725		A	Revision of neck muscle	6.99	NA	NA	6.85	6.45	0.90	NA	NA	14.74	14.34	090
21740		A	Reconstruction of sternum	16.80	NA	NA	15.71	14.22	2.03	NA	NA	34.54	33.05	090
21750		A	Repair of sternum separation	10.77	NA	NA	13.10	11.81	1.35	NA	NA	25.22	23.93	090
21800		A	Treatment of rib fracture	0.96	2.17	1.84	1.00	0.96	0.09	3.22	2.89	2.05	2.01	090
21805		A	Treatment of rib fracture	2.75	NA	NA	4.14	3.47	0.29	NA	NA	7.18	6.51	090
21810		A	Treatment of rib fracture(s)	6.86	NA	NA	7.05	7.28	0.60	NA	NA	14.51	14.74	090
21820		A	Treat sternum fracture	1.28	2.59	2.31	1.47	1.47	0.15	4.02	3.74	2.90	2.90	090
21825		A	Treat sternum fracture	7.41	NA	NA	11.82	10.74	0.84	NA	NA	20.07	18.99	090
21899		C	Neck/chest surgery procedure	0.00	0.00	0.00	0.00	0.00	0.00	0.00	0.00	0.00	0.00	YYY
21920		A	Biopsy soft tissue of back	2.06	2.35	1.98	0.79	0.70	0.12	4.53	4.16	2.97	2.88	010
21925		A	Biopsy soft tissue of back	4.49	10.52	8.42	4.40	3.83	0.44	15.45	13.35	9.33	8.76	090
21930		A	Remove lesion, back or flank	5.00	4.59	4.18	2.72	2.78	0.49	10.08	9.67	8.21	8.27	090
21935		A	Remove tumor, back	17.96	NA	NA	13.07	11.59	1.87	NA	NA	32.90	31.42	090
22100		A	Remove part of neck vertebra	9.73	NA	NA	8.60	8.52	1.55	NA	NA	19.88	19.80	090
22101		A	Remove part, thorax vertebra	9.81	NA	NA	8.47	8.53	1.51	NA	NA	19.79	19.85	090
22102		A	Remove part, lumbar vertebra	9.81	NA	NA	8.68	7.73	1.46	NA	NA	19.95	19.00	090
22103		A	Remove extra spine segment	2.34	NA	NA	1.29	1.57	0.37	NA	NA	4.00	4.28	ZZZ
22110		A	Remove part of neck vertebra	12.74	NA	NA	10.49	10.51	2.20	NA	NA	25.43	25.45	090
22112		A	Remove part, thorax vertebra	12.81	NA	NA	10.91	10.87	1.96	NA	NA	25.68	25.64	090
22114		A	Remove part, lumbar vertebra	12.81	NA	NA	10.36	9.74	1.98	NA	NA	25.15	24.53	090
22116		A	Remove extra spine segment	2.32	NA	NA	1.18	1.49	0.40	NA	NA	3.90	4.21	ZZZ
22210		A	Revision of neck spine	23.82	NA	NA	16.86	16.40	4.23	NA	NA	44.91	44.45	090
22212		A	Revision of thorax spine	19.42	NA	NA	14.33	15.44	2.78	NA	NA	36.53	37.64	090
22214		A	Revision of lumbar spine	19.45	NA	NA	14.87	15.25	2.78	NA	NA	37.10	37.48	090
22216		A	Revise, extra spine segment	6.04	NA	NA	3.27	3.83	0.98	NA	NA	10.29	10.85	ZZZ
22220		A	Revision of neck spine	21.37	NA	NA	15.47	16.12	3.65	NA	NA	40.49	41.14	090
22222		A	Revision of thorax spine	21.52	NA	NA	13.59	13.89	3.08	NA	NA	38.19	38.49	090
22224		A	Revision of lumbar spine	21.52	NA	NA	15.81	15.84	3.20	NA	NA	40.53	40.56	090
22226		A	Revise, extra spine segment	6.04	NA	NA	3.27	3.83	1.01	NA	NA	10.32	10.88	ZZZ
22305		A	Treat spine process fracture	2.05	3.02	2.88	1.86	2.01	0.29	5.36	5.22	4.20	4.35	090
22310		A	Treat spine fracture	2.61	4.38	3.97	3.27	3.14	0.37	7.36	6.95	6.25	6.12	090
22315		A	Treat spine fracture	8.84	NA	NA	8.89	8.16	1.37	NA	NA	19.10	18.37	090
22318		A	Treat odontoid fx w/o graft	21.50	NA	NA	14.53	14.53	4.26	NA	NA	40.29	40.29	090
22319		A	Treat odontoid fx w/graft	24.00	NA	NA	16.80	16.80	4.76	NA	NA	45.56	45.56	090
22325		A	Treat spine fracture	18.30	NA	NA	14.19	12.90	2.61	NA	NA	35.10	33.81	090
22326		A	Treat neck spine fracture	19.59	NA	NA	15.24	15.75	3.54	NA	NA	38.37	38.88	090
22327		A	Treat thorax spine fracture	19.20	NA	NA	14.50	15.20	2.75	NA	NA	36.45	37.15	090
22328		A	Treat each add spine fx	4.61	NA	NA	2.29	2.91	0.66	NA	NA	7.56	8.18	ZZZ
22505		A	Manipulation of spine	1.87	4.60	3.81	2.97	2.58	0.27	6.74	5.95	5.11	4.72	010
22520		A	Percut vertebroplasty thor	8.91	NA	NA	3.95	3.95	0.89	NA	NA	13.75	13.75	010
22521		A	Percut vertebroplasty lumb	8.34	NA	NA	3.72	3.72	0.84	NA	NA	12.90	12.90	010
22522		A	Percut vertebroplasty addl	3.00	NA	NA	1.20	1.20	0.30	NA	NA	4.50	4.50	ZZZ
22548		A	Neck spine fusion	25.82	NA	NA	17.66	19.42	4.98	NA	NA	48.46	50.22	090
22554		A	Neck spine fusion	18.62	NA	NA	13.60	15.58	3.51	NA	NA	35.73	37.71	090
22556		A	Thorax spine fusion	23.46	NA	NA	16.73	18.43	3.78	NA	NA	43.97	45.67	090
22558		A	Lumbar spine fusion	22.28	NA	NA	14.49	16.34	3.18	NA	NA	39.95	41.80	090
22585		A	Additional spinal fusion	5.53	NA	NA	2.90	3.64	0.98	NA	NA	9.41	10.15	ZZZ
22590		A	Spine & skull spinal fusion	20.51	NA	NA	15.27	17.31	3.81	NA	NA	39.59	41.63	090
22595		A	Neck spinal fusion	19.39	NA	NA	14.26	16.48	3.62	NA	NA	37.27	39.49	090
22600		A	Neck spine fusion	16.14	NA	NA	12.55	14.23	2.89	NA	NA	31.58	33.26	090
22610		A	Thorax spine fusion	16.02	NA	NA	12.52	14.17	2.66	NA	NA	31.20	32.85	090
22612		A	Lumbar spine fusion	21.00	NA	NA	15.30	17.07	3.28	NA	NA	39.58	41.35	090
22614		A	Spine fusion, extra segment	6.44	NA	NA	3.49	4.15	1.04	NA	NA	10.97	11.63	ZZZ
22630		A	Lumbar spine fusion	20.84	NA	NA	15.53	16.65	3.79	NA	NA	40.16	41.28	090
22632		A	Spine fusion, extra segment	5.23	NA	NA	2.80	3.46	0.90	NA	NA	8.93	9.59	ZZZ
22800		A	Fusion of spine	18.25	NA	NA	13.59	15.64	2.71	NA	NA	34.55	36.60	090
22802		A	Fusion of spine	30.88	NA	NA	21.22	23.60	4.42	NA	NA	56.52	58.90	090
22804		A	Fusion of spine	36.27	NA	NA	23.90	25.61	5.23	NA	NA	65.40	67.11	090
22808		A	Fusion of spine	26.27	NA	NA	18.27	18.70	4.36	NA	NA	48.90	49.33	090
22810		A	Fusion of spine	30.27	NA	NA	19.89	19.91	4.49	NA	NA	54.65	54.67	090
22812		A	Fusion of spine	32.70	NA	NA	21.94	23.49	4.67	NA	NA	59.31	60.86	090
22818		A	Kyphectomy, 1-2 segments	31.83	NA	NA	20.99	23.41	5.01	NA	NA	57.83	60.25	090
22819		A	Kyphectomy, 3 or more	36.44	NA	NA	20.73	23.21	5.20	NA	NA	62.37	64.85	090
22830		A	Exploration of spinal fusion	10.85	NA	NA	9.58	10.43	1.73	NA	NA	22.16	23.01	090
22840		A	Insert spine fixation device	12.54	NA	NA	8.31	7.86	2.03	NA	NA	22.88	22.43	ZZZ
22841		B	Insert spine fixation device	0.00	0.00	0.00	0.00	0.00	0.00	0.00	0.00	0.00	0.00	XXX
22842		A	Insert spine fixation device	12.58	NA	NA	6.79	6.95	2.04	NA	NA	21.41	21.57	ZZZ
22843		A	Insert spine fixation device	13.46	NA	NA	8.80	8.92	2.10	NA	NA	24.36	24.48	ZZZ
22844		A	Insert spine fixation device	16.44	NA	NA	10.46	10.68	2.42	NA	NA	29.32	29.54	ZZZ
22845		A	Insert spine fixation device	11.96	NA	NA	7.90	7.47	2.22	NA	NA	22.08	21.65	ZZZ
22846		A	Insert spine fixation device	12.42	NA	NA	8.17	8.27	2.26	NA	NA	22.85	22.95	ZZZ
22847		A	Insert spine fixation device	13.80	NA	NA	8.90	9.06	2.36	NA	NA	25.06	25.22	ZZZ
22848		A	Insert pelv fixation device	6.00	NA	NA	4.74	5.11	0.88	NA	NA	11.62	11.99	ZZZ
22849		A	Reinsert spinal fixation	18.51	NA	NA	13.69	13.46	2.87	NA	NA	35.07	34.84	090
22850		A	Remove spine fixation device	9.52	NA	NA	8.41	8.80	1.51	NA	NA	19.44	19.83	090
22851		A	Apply spine prosth device	6.71	NA	NA	5.07	5.54	1.11	NA	NA	12.89	13.36	ZZZ
22852		A	Remove spine fixation device	9.01	NA	NA	8.18	8.80	1.40	NA	NA	18.59	19.21	090
22855		A	Remove spine fixation device	15.13	NA	NA	11.26	10.47	2.74	NA	NA	29.13	28.34	090

[1] CPT codes and descriptions only are copyright 2000 American Medical Association. All Rights Reserved. Applicable FARS/DFARS Apply.
[2] Copyright 1994 American Dental Association. All rights reserved.
[3] + Indicates RVUs are not used for Medicare payment.
[4] PE RVUs = Practice Expense Relative Value Units.

ADDENDUM B.—RELATIVE VALUE UNITS (RVU'S) AND RELATED INFORMATION—Continued

CPT[1]/ HCPCS[2]	MOD	Status	Description	Physician Work RVUs[3]	Fully Implemented Non-Facility PE RVUs	Year 2001 Transitional Non-Facility PE RVUs	Fully Implemented Facility PE RVUs	Year 2001 Transitional Facility PE RVUs	Mal-Practice RVUs	Fully Implemented Non-Facility Total	Year 2001 Transitional Non-Facility Total	Fully Implemented Facility Total	Year 2001 Transitional Facility Total	Global
22899		C	Spine surgery procedure	0.00	0.00	0.00	0.00	0.00	0.00	0.00	0.00	0.00	0.00	YYY
22900		A	Remove abdominal wall lesion	5.80	NA	NA	4.37	4.10	0.58	NA	NA	10.75	10.48	090
22999		C	Abdomen surgery procedure	0.00	0.00	0.00	0.00	0.00	0.00	0.00	0.00	0.00	0.00	YYY
23000		A	Removal of calcium deposits	4.36	8.91	7.56	6.62	5.85	0.50	13.77	12.42	11.48	10.71	090
23020		A	Release shoulder joint	8.93	NA	NA	9.98	9.46	1.23	NA	NA	20.14	19.62	090
23030		A	Drain shoulder lesion	3.43	5.78	4.92	4.20	3.74	0.42	9.63	8.77	8.05	7.59	010
23031		A	Drain shoulder bursa	2.74	5.66	4.38	3.82	2.93	0.33	8.73	7.45	6.89	6.00	010
23035		A	Drain shoulder bone lesion	8.61	NA	NA	14.63	12.66	1.19	NA	NA	24.43	22.46	090
23040		A	Exploratory shoulder surgery	9.20	NA	NA	10.88	10.68	1.28	NA	NA	21.36	21.16	090
23044		A	Exploratory shoulder surgery	7.12	NA	NA	9.95	9.34	0.97	NA	NA	18.04	17.43	090
23065		A	Biopsy shoulder tissues	2.27	2.57	2.11	1.30	1.16	0.14	4.98	4.52	3.71	3.57	010
23066		A	Biopsy shoulder tissues	4.16	7.35	5.83	6.09	4.89	0.50	12.01	10.49	10.75	9.55	090
23075		A	Removal of shoulder lesion	2.39	5.10	4.28	3.04	2.74	0.25	7.74	6.92	5.68	5.38	010
23076		A	Removal of shoulder lesion	7.63	NA	NA	7.98	6.95	0.87	NA	NA	16.48	15.45	090
23077		A	Remove tumor of shoulder	16.09	NA	NA	14.00	12.50	1.81	NA	NA	31.90	30.40	090
23100		A	Biopsy of shoulder joint	6.03	NA	NA	8.00	7.80	0.81	NA	NA	14.84	14.64	090
23101		A	Shoulder joint surgery	5.58	NA	NA	8.13	7.76	0.77	NA	NA	14.48	14.11	090
23105		A	Remove shoulder joint lining	8.23	NA	NA	9.59	9.65	1.13	NA	NA	18.95	19.01	090
23106		A	Incision of collarbone joint	5.96	NA	NA	8.53	7.69	0.82	NA	NA	15.31	14.47	090
23107		A	Explore treat shoulder joint	8.62	NA	NA	9.60	9.77	1.19	NA	NA	19.41	19.58	090
23120		A	Partial removal, collar bone	7.11	NA	NA	8.87	7.90	0.99	NA	NA	16.97	16.00	090
23125		A	Removal of collar bone	9.39	NA	NA	10.29	10.02	1.27	NA	NA	20.95	20.68	090
23130		A	Remove shoulder bone, part	7.55	NA	NA	9.12	8.75	1.06	NA	NA	17.73	17.36	090
23140		A	Removal of bone lesion	6.89	NA	NA	8.32	7.37	0.82	NA	NA	16.03	15.08	090
23145		A	Removal of bone lesion	9.09	NA	NA	11.32	10.70	1.24	NA	NA	21.65	21.03	090
23146		A	Removal of bone lesion	7.83	NA	NA	9.97	8.90	1.11	NA	NA	18.91	17.84	090
23150		A	Removal of humerus lesion	8.48	NA	NA	9.44	8.88	1.14	NA	NA	19.06	18.50	090
23155		A	Removal of humerus lesion	10.35	NA	NA	10.79	10.48	1.20	NA	NA	22.34	22.03	090
23156		A	Removal of humerus lesion	8.68	NA	NA	9.69	9.34	1.18	NA	NA	19.55	19.20	090
23170		A	Remove collar bone lesion	6.86	NA	NA	10.75	9.37	0.84	NA	NA	18.45	17.07	090
23172		A	Remove shoulder blade lesion	6.90	NA	NA	10.98	9.64	0.95	NA	NA	18.83	17.49	090
23174		A	Remove humerus lesion	9.51	NA	NA	10.91	10.50	1.30	NA	NA	21.72	21.31	090
23180		A	Remove collar bone lesion	8.53	NA	NA	14.81	12.28	1.18	NA	NA	24.52	21.99	090
23182		A	Remove shoulder blade lesion	8.15	NA	NA	15.51	13.42	1.08	NA	NA	24.74	22.65	090
23184		A	Remove humerus lesion	9.38	NA	NA	14.87	13.55	1.24	NA	NA	25.49	24.17	090
23190		A	Partial removal of scapula	7.24	NA	NA	8.00	7.65	0.97	NA	NA	16.21	15.86	090
23195		A	Removal of head of humerus	9.81	NA	NA	10.43	10.24	1.38	NA	NA	21.62	21.43	090
23200		A	Removal of collar bone	12.08	NA	NA	13.60	12.69	1.48	NA	NA	27.16	26.25	090
23210		A	Removal of shoulder blade	12.49	NA	NA	13.62	12.66	1.61	NA	NA	27.72	26.76	090
23220		A	Partial removal of humerus	14.56	NA	NA	14.40	14.07	2.03	NA	NA	30.99	30.66	090
23221		A	Partial removal of humerus	17.74	NA	NA	16.08	16.98	2.51	NA	NA	36.33	37.23	090
23222		A	Partial removal of humerus	23.92	NA	NA	19.73	18.87	3.37	NA	NA	47.02	46.16	090
23330		A	Remove shoulder foreign body	1.85	5.35	4.16	4.63	3.55	0.18	7.38	6.19	6.66	5.58	010
23331		A	Remove shoulder foreign body	7.38	NA	NA	8.97	7.34	1.02	NA	NA	17.37	15.74	090
23332		A	Remove shoulder foreign body	11.62	NA	NA	11.33	11.14	1.62	NA	NA	24.57	24.38	090
23350		A	Injection for shoulder x-ray	1.00	9.36	7.16	0.36	0.41	0.05	10.41	8.21	1.41	1.46	000
23395		A	Muscle transfer,shoulder/arm	16.85	NA	NA	13.44	13.10	2.29	NA	NA	32.58	32.24	090
23397		A	Muscle transfers	16.13	NA	NA	13.98	14.28	2.24	NA	NA	32.35	32.65	090
23400		A	Fixation of shoulder blade	13.54	NA	NA	12.95	12.38	1.91	NA	NA	28.40	27.83	090
23405		A	Incision of tendon & muscle	8.37	NA	NA	8.93	8.73	1.12	NA	NA	18.42	18.22	090
23406		A	Incise tendon(s) & muscle(s)	10.79	NA	NA	10.82	10.67	1.48	NA	NA	23.09	22.94	090
23410		A	Repair of tendon(s)	12.45	NA	NA	11.69	11.74	1.72	NA	NA	25.86	25.91	090
23412		A	Repair of tendon(s)	13.31	NA	NA	12.27	12.83	1.86	NA	NA	27.44	28.00	090
23415		A	Release of shoulder ligament	9.97	NA	NA	9.61	8.61	1.39	NA	NA	20.97	19.97	090
23420		A	Repair of shoulder	13.30	NA	NA	13.09	13.79	1.86	NA	NA	28.25	28.95	090
23430		A	Repair biceps tendon	9.98	NA	NA	10.44	9.82	1.40	NA	NA	21.82	21.20	090
23440		A	Remove/transplant tendon	10.48	NA	NA	10.67	9.95	1.47	NA	NA	22.62	21.90	090
23450		A	Repair shoulder capsule	13.40	NA	NA	12.42	12.78	1.86	NA	NA	27.68	28.04	090
23455		A	Repair shoulder capsule	14.37	NA	NA	12.88	13.88	2.01	NA	NA	29.26	30.26	090
23460		A	Repair shoulder capsule	15.37	NA	NA	13.54	13.97	2.17	NA	NA	31.08	31.51	090
23462		A	Repair shoulder capsule	15.30	NA	NA	13.37	14.13	2.16	NA	NA	30.83	31.59	090
23465		A	Repair shoulder capsule	15.85	NA	NA	12.30	13.07	1.61	NA	NA	29.76	30.53	090
23466		A	Repair shoulder capsule	14.22	NA	NA	12.80	13.84	2.00	NA	NA	29.02	30.06	090
23470		A	Reconstruct shoulder joint	17.15	NA	NA	14.38	15.33	2.40	NA	NA	33.93	34.88	090
23472		A	Reconstruct shoulder joint	16.92	NA	NA	14.29	15.77	2.37	NA	NA	33.58	35.06	090
23480		A	Revision of collar bone	11.18	NA	NA	11.14	10.14	1.56	NA	NA	23.88	22.88	090
23485		A	Revision of collar bone	13.43	NA	NA	12.41	12.39	1.84	NA	NA	27.68	27.66	090
23490		A	Reinforce clavicle	11.86	NA	NA	10.53	10.61	1.11	NA	NA	23.50	23.58	090
23491		A	Reinforce shoulder bones	14.21	NA	NA	12.58	12.88	2.00	NA	NA	28.79	29.09	090
23500		A	Treat clavicle fracture	2.08	3.55	3.11	2.37	2.23	0.26	5.89	5.45	4.71	4.57	090
23505		A	Treat clavicle fracture	3.69	5.46	4.79	3.77	3.53	0.50	9.65	8.98	7.96	7.72	090
23515		A	Treat clavicle fracture	7.41	NA	NA	7.68	7.64	1.03	NA	NA	16.12	16.08	090
23520		A	Treat clavicle dislocation	2.16	3.47	2.98	2.40	2.18	0.26	5.89	5.40	4.82	4.60	090
23525		A	Treat clavicle dislocation	3.60	5.33	4.54	3.63	3.26	0.44	9.37	8.58	7.67	7.30	090
23530		A	Treat clavicle dislocation	7.31	NA	NA	8.76	8.36	0.85	NA	NA	16.92	16.52	090
23532		A	Treat clavicle dislocation	8.01	NA	NA	8.08	8.02	1.13	NA	NA	17.22	17.16	090
23540		A	Treat clavicle dislocation	2.23	4.11	3.50	2.38	2.21	0.24	6.58	5.97	4.85	4.68	090
23545		A	Treat clavicle dislocation	3.25	4.72	4.08	3.44	3.12	0.39	8.36	7.72	7.08	6.76	090
23550		A	Treat clavicle dislocation	7.24	NA	NA	7.68	7.92	0.94	NA	NA	15.86	16.10	090
23552		A	Treat clavicle dislocation	8.45	NA	NA	8.29	8.20	1.18	NA	NA	17.92	17.83	090
23570		A	Treat shoulder blade fx	2.23	3.54	3.12	2.49	2.33	0.29	6.06	5.64	5.01	4.85	090
23575		A	Treat shoulder blade fx	4.06	5.59	4.94	3.98	3.73	0.53	10.18	9.53	8.57	8.32	090
23585		A	Treat scapula fracture	8.96	NA	NA	8.82	8.71	1.25	NA	NA	19.03	18.92	090

[1] CPT codes and descriptions only are copyright 2000 American Medical Association. All Rights Reserved. Applicable FARS/DFARS Apply.
[2] Copyright 1994 American Dental Association. All rights reserved.
[3] + Indicates RVUs are not used for Medicare payment.
[4] PE RVUs = Practice Expense Relative Value Units.

ADDENDUM B.—RELATIVE VALUE UNITS (RVU'S) AND RELATED INFORMATION—Continued

CPT[1]/ HCPCS[2]	MOD	Status	Description	Physician Work RVUs[3]	Fully Implemented Non-Facility PE RVUs	Year 2001 Transitional Non-Facility PE RVUs	Fully Implemented Facility PE RVUs	Year 2001 Transitional Facility PE RVUs	Mal-Practice RVUs	Fully Implemented Non-Facility Total	Year 2001 Transitional Non-Facility Total	Fully Implemented Facility Total	Year 2001 Transitional Facility Total	Global
23600		A	Treat humerus fracture	2.93	5.41	4.85	3.52	3.43	0.39	8.73	8.17	6.84	6.75	090
23605		A	Treat humerus fracture	4.87	8.14	7.40	6.40	6.09	0.67	13.68	12.94	11.94	11.63	090
23615		A	Treat humerus fracture	9.35	NA	NA	9.52	9.93	1.31	NA	NA	20.18	20.59	090
23616		A	Treat humerus fracture	21.27	NA	NA	15.55	17.72	2.98	NA	NA	39.80	41.97	090
23620		A	Treat humerus fracture	2.40	5.12	4.62	3.26	2.81	0.32	7.84	7.34	5.98	5.53	090
23625		A	Treat humerus fracture	3.93	7.07	6.34	5.32	5.03	0.53	11.53	10.80	9.78	9.49	090
23630		A	Treat humerus fracture	7.35	NA	NA	7.67	7.95	1.03	NA	NA	16.05	16.33	090
23650		A	Treat shoulder dislocation	3.39	5.17	4.45	3.33	3.07	0.31	8.87	8.15	7.03	6.77	090
23655		A	Treat shoulder dislocation	4.57	NA	NA	4.03	3.82	0.52	NA	NA	9.12	8.91	090
23660		A	Treat shoulder dislocation	7.49	NA	NA	7.64	7.97	1.01	NA	NA	16.14	16.47	090
23665		A	Treat dislocation/fracture	4.47	7.39	6.45	5.59	5.10	0.60	12.46	11.52	10.66	10.17	090
23670		A	Treat dislocation/fracture	7.90	NA	NA	8.11	8.44	1.10	NA	NA	17.11	17.44	090
23675		A	Treat dislocation/fracture	6.05	8.17	7.20	6.49	5.94	0.83	15.05	14.08	13.37	12.82	090
23680		A	Treat dislocation/fracture	10.06	NA	NA	9.31	9.99	1.39	NA	NA	20.76	21.44	090
23700		A	Fixation of shoulder	2.52	NA	NA	3.22	2.98	0.35	NA	NA	6.09	5.85	010
23800		A	Fusion of shoulder joint	14.16	NA	NA	13.53	14.38	1.97	NA	NA	29.66	30.51	090
23802		A	Fusion of shoulder joint	16.60	NA	NA	15.01	15.08	2.34	NA	NA	33.95	34.02	090
23900		A	Amputation of arm & girdle	19.72	NA	NA	14.73	14.46	2.47	NA	NA	36.92	36.65	090
23920		A	Amputation at shoulder joint	14.61	NA	NA	13.74	14.06	1.92	NA	NA	30.27	30.59	090
23921		A	Amputation follow-up surgery	5.49	NA	NA	6.55	6.07	0.78	NA	NA	12.82	12.34	090
23929		C	Shoulder surgery procedure	0.00	0.00	0.00	0.00	0.00	0.00	0.00	0.00	0.00	0.00	YYY
23930		A	Drainage of arm lesion	2.94	5.81	4.80	3.91	3.37	0.32	9.07	8.06	7.17	6.63	010
23931		A	Drainage of arm bursa	1.79	5.38	4.24	3.37	2.63	0.21	7.38	6.24	5.37	4.63	010
23935		A	Drain arm/elbow bone lesion	6.09	NA	NA	12.01	10.28	0.84	NA	NA	18.94	17.21	090
24000		A	Exploratory elbow surgery	5.82	NA	NA	5.68	6.00	0.77	NA	NA	12.27	12.59	090
24006		A	Release elbow joint	9.31	NA	NA	8.12	8.03	1.27	NA	NA	18.70	18.61	090
24065		A	Biopsy arm/elbow soft tissue	2.08	5.40	4.27	3.20	2.51	0.14	7.62	6.49	5.42	4.73	010
24066		A	Biopsy arm/elbow soft tissue	5.21	8.49	7.10	6.36	5.51	0.61	14.31	12.92	12.18	11.33	090
24075		A	Remove arm/elbow lesion	3.92	7.81	6.40	5.71	4.82	0.43	12.16	10.75	10.06	9.17	090
24076		A	Remove arm/elbow lesion	6.30	NA	NA	6.80	6.10	0.70	NA	NA	13.80	13.10	090
24077		A	Remove tumor of arm/elbow	11.76	NA	NA	13.16	12.53	1.32	NA	NA	26.24	25.61	090
24100		A	Biopsy elbow joint lining	4.93	NA	NA	5.48	5.26	0.62	NA	NA	11.03	10.81	090
24101		A	Explore/treat elbow joint	6.13	NA	NA	6.32	6.57	0.84	NA	NA	13.29	13.54	090
24102		A	Remove elbow joint lining	8.03	NA	NA	7.40	7.95	1.09	NA	NA	16.52	17.07	090
24105		A	Removal of elbow bursa	3.61	NA	NA	4.83	4.65	0.49	NA	NA	8.93	8.75	090
24110		A	Remove humerus lesion	7.39	NA	NA	9.06	8.88	0.99	NA	NA	17.44	17.26	090
24115		A	Remove/graft bone lesion	9.63	NA	NA	9.34	9.09	1.15	NA	NA	20.12	19.87	090
24116		A	Remove/graft bone lesion	11.81	NA	NA	11.19	11.03	1.66	NA	NA	24.66	24.50	090
24120		A	Remove elbow lesion	6.65	NA	NA	6.29	6.35	0.87	NA	NA	13.81	13.87	090
24125		A	Remove/graft bone lesion	7.89	NA	NA	6.54	6.48	0.88	NA	NA	15.31	15.25	090
24126		A	Remove/graft bone lesion	8.31	NA	NA	7.07	7.31	0.90	NA	NA	16.28	16.52	090
24130		A	Removal of head of radius	6.25	NA	NA	6.41	6.63	0.87	NA	NA	13.53	13.75	090
24134		A	Removal of arm bone lesion	9.73	NA	NA	15.37	13.89	1.31	NA	NA	26.41	24.93	090
24136		A	Remove radius bone lesion	7.99	NA	NA	6.52	7.27	0.85	NA	NA	15.36	16.11	090
24138		A	Remove elbow bone lesion	8.05	NA	NA	7.33	7.23	1.12	NA	NA	16.50	16.40	090
24140		A	Partial removal of arm bone	9.18	NA	NA	15.69	14.15	1.23	NA	NA	26.10	24.56	090
24145		A	Partial removal of radius	7.58	NA	NA	10.25	9.42	1.01	NA	NA	18.84	18.01	090
24147		A	Partial removal of elbow	7.54	NA	NA	10.30	9.52	1.04	NA	NA	18.88	18.10	090
24149		A	Radical resection of elbow	14.20	NA	NA	10.77	11.51	1.90	NA	NA	26.87	27.61	090
24150		A	Extensive humerus surgery	13.27	NA	NA	13.78	14.16	1.81	NA	NA	28.86	29.24	090
24151		A	Extensive humerus surgery	15.58	NA	NA	15.34	15.26	2.19	NA	NA	33.11	33.03	090
24152		A	Extensive radius surgery	10.06	NA	NA	8.92	8.54	1.19	NA	NA	20.17	19.79	090
24153		A	Extensive radius surgery	11.54	NA	NA	7.24	8.26	0.64	NA	NA	19.42	20.44	090
24155		A	Removal of elbow joint	11.73	NA	NA	8.75	9.48	1.42	NA	NA	21.90	22.63	090
24160		A	Remove elbow joint implant	7.83	NA	NA	7.29	6.78	1.07	NA	NA	16.19	15.68	090
24164		A	Remove radius head implant	6.23	NA	NA	6.33	6.25	0.84	NA	NA	13.40	13.32	090
24200		A	Removal of arm foreign body	1.76	5.66	4.40	3.13	2.43	0.15	7.57	6.31	5.04	4.34	010
24201		A	Removal of arm foreign body	4.56	8.52	7.22	7.15	6.19	0.56	13.64	12.34	12.27	11.31	090
24220		A	Injection for elbow x-ray	1.31	10.24	7.82	0.48	0.50	0.07	11.62	9.20	1.86	1.88	000
24301		A	Muscle/tendon transfer	10.20	NA	NA	8.82	8.76	1.30	NA	NA	20.32	20.26	090
24305		A	Arm tendon lengthening	7.45	NA	NA	7.11	6.17	0.98	NA	NA	15.54	14.60	090
24310		A	Revision of arm tendon	5.98	NA	NA	7.62	6.52	0.74	NA	NA	14.34	13.24	090
24320		A	Repair of arm tendon	10.56	NA	NA	9.86	9.89	1.00	NA	NA	21.42	21.45	090
24330		A	Revision of arm muscles	9.60	NA	NA	8.31	8.61	1.21	NA	NA	19.12	19.42	090
24331		A	Revision of arm muscles	10.65	NA	NA	8.75	9.17	1.41	NA	NA	20.81	21.23	090
24340		A	Repair of biceps tendon	7.89	NA	NA	7.19	7.29	1.08	NA	NA	16.16	16.26	090
24341		A	Repair arm tendon/muscle	7.90	NA	NA	7.25	7.34	1.08	NA	NA	16.23	16.32	090
24342		A	Repair of ruptured tendon	10.62	NA	NA	8.86	9.46	1.48	NA	NA	20.96	21.56	090
24350		A	Repair of tennis elbow	5.25	NA	NA	5.88	5.56	0.72	NA	NA	11.85	11.53	090
24351		A	Repair of tennis elbow	5.91	NA	NA	6.31	5.97	0.82	NA	NA	13.04	12.70	090
24352		A	Repair of tennis elbow	6.43	NA	NA	6.58	6.48	0.90	NA	NA	13.91	13.81	090
24354		A	Repair of tennis elbow	6.48	NA	NA	6.53	6.42	0.88	NA	NA	13.89	13.78	090
24356		A	Revision of tennis elbow	6.68	NA	NA	6.70	7.00	0.90	NA	NA	14.28	14.58	090
24360		A	Reconstruct elbow joint	12.34	NA	NA	9.59	10.88	1.69	NA	NA	23.62	24.91	090
24361		A	Reconstruct elbow joint	14.08	NA	NA	10.32	11.30	1.95	NA	NA	26.35	27.33	090
24362		A	Reconstruct elbow joint	14.99	NA	NA	10.85	9.92	1.92	NA	NA	27.76	26.83	090
24363		A	Replace elbow joint	18.49	NA	NA	13.18	15.40	2.52	NA	NA	34.19	36.41	090
24365		A	Reconstruct head of radius	8.39	NA	NA	7.59	7.73	1.11	NA	NA	17.09	17.23	090
24366		A	Reconstruct head of radius	9.13	NA	NA	8.00	8.73	1.28	NA	NA	18.41	19.14	090
24400		A	Revision of humerus	11.06	NA	NA	11.87	11.19	1.53	NA	NA	24.46	23.78	090
24410		A	Revision of humerus	14.82	NA	NA	13.81	14.17	1.89	NA	NA	30.52	30.88	090
24420		A	Revision of humerus	13.44	NA	NA	15.37	14.87	1.82	NA	NA	30.63	30.13	090
24430		A	Repair of humerus	12.81	NA	NA	12.12	12.91	1.80	NA	NA	26.73	27.52	090

[1] CPT codes and descriptions only are copyright 2000 American Medical Association. All Rights Reserved. Applicable FARS/DFARS Apply.
[2] Copyright 1994 American Dental Association. All rights reserved.
[3] + Indicates RVUs are not used for Medicare payment.
[4] PE RVUs = Practice Expense Relative Value Units.

ADDENDUM B.—RELATIVE VALUE UNITS (RVU'S) AND RELATED INFORMATION—Continued

CPT[1]/ HCPCS[2]	MOD	Status	Description	Physician Work RVUs[3]	Fully Implemented Non-Facility PE RVUs	Year 2001 Transitional Non-Facility PE RVUs	Fully Implemented Facility PE RVUs	Year 2001 Transitional Facility PE RVUs	Mal-Practice RVUs	Fully Implemented Non-Facility Total	Year 2001 Transitional Non-Facility Total	Fully Implemented Facility Total	Year 2001 Transitional Facility Total	Global
24435		A	Repair humerus with graft	13.17	NA	NA	13.09	13.75	1.84	NA	NA	28.10	28.76	090
24470		A	Revision of elbow joint	8.74	NA	NA	7.13	7.50	1.23	NA	NA	17.10	17.47	090
24495		A	Decompression of forearm	8.12	NA	NA	9.57	8.74	0.92	NA	NA	18.61	17.78	090
24498		A	Reinforce humerus	11.92	NA	NA	11.57	11.49	1.67	NA	NA	25.16	25.08	090
24500		A	Treat humerus fracture	3.21	4.99	4.43	3.25	3.13	0.41	8.61	8.05	6.87	6.75	090
24505		A	Treat humerus fracture	5.17	8.65	7.71	6.67	6.22	0.72	14.54	13.60	12.56	12.11	090
24515		A	Treat humerus fracture	11.65	NA	NA	10.75	10.68	1.63	NA	NA	24.03	23.96	090
24516		A	Treat humerus fracture	11.65	NA	NA	11.14	10.97	1.63	NA	NA	24.42	24.25	090
24530		A	Treat humerus fracture	3.50	6.03	5.26	4.71	4.27	0.47	10.00	9.23	8.68	8.24	090
24535		A	Treat humerus fracture	6.87	8.56	7.74	6.60	6.27	0.96	16.39	15.57	14.43	14.10	090
24538		A	Treat humerus fracture	9.43	NA	NA	9.73	9.46	1.25	NA	NA	20.41	20.14	090
24545		A	Treat humerus fracture	10.46	NA	NA	9.57	9.88	1.47	NA	NA	21.50	21.81	090
24546		A	Treat humerus fracture	15.69	NA	NA	12.98	12.44	2.18	NA	NA	30.85	30.31	090
24560		A	Treat humerus fracture	2.80	4.81	4.19	3.04	2.87	0.35	7.96	7.34	6.19	6.02	090
24565		A	Treat humerus fracture	5.56	7.82	6.80	5.85	5.32	0.74	14.12	13.10	12.15	11.62	090
24566		A	Treat humerus fracture	7.79	NA	NA	9.23	8.57	1.10	NA	NA	18.12	17.46	090
24575		A	Treat humerus fracture	10.66	NA	NA	7.98	8.10	1.44	NA	NA	20.08	20.20	090
24576		A	Treat humerus fracture	2.86	4.53	3.98	3.15	2.95	0.38	7.77	7.22	6.39	6.19	090
24577		A	Treat humerus fracture	5.79	7.93	7.03	5.99	5.58	0.81	14.53	13.63	12.59	12.18	090
24579		A	Treat humerus fracture	11.60	NA	NA	10.67	10.27	1.62	NA	NA	23.89	23.49	090
24582		A	Treat humerus fracture	8.55	NA	NA	9.71	9.08	1.20	NA	NA	19.46	18.83	090
24586		A	Treat elbow fracture	15.21	NA	NA	10.70	12.02	2.12	NA	NA	28.03	29.35	090
24587		A	Treat elbow fracture	15.16	NA	NA	10.48	11.58	2.14	NA	NA	27.78	28.88	090
24600		A	Treat elbow dislocation	4.23	6.77	5.61	4.98	4.27	0.49	11.49	10.33	9.70	8.99	090
24605		A	Treat elbow dislocation	5.42	NA	NA	4.73	4.17	0.72	NA	NA	10.87	10.31	090
24615		A	Treat elbow dislocation	9.42	NA	NA	7.53	8.17	1.31	NA	NA	18.26	18.90	090
24620		A	Treat elbow fracture	6.98	NA	NA	6.42	5.84	0.90	NA	NA	14.30	13.72	090
24635		A	Treat elbow fracture	13.19	NA	NA	15.05	14.29	1.84	NA	NA	30.08	29.32	090
24640		A	Treat elbow dislocation	1.20	3.46	2.87	1.77	1.60	0.11	4.77	4.18	3.08	2.91	010
24650		A	Treat radius fracture	2.16	4.45	3.95	2.80	2.41	0.28	6.89	6.39	5.24	4.85	090
24655		A	Treat radius fracture	4.40	7.12	6.16	5.15	4.68	0.58	12.10	11.14	10.13	9.66	090
24665		A	Treat radius fracture	8.14	NA	NA	8.78	8.52	1.13	NA	NA	18.05	17.79	090
24666		A	Treat radius fracture	9.49	NA	NA	9.51	9.92	1.32	NA	NA	20.32	20.73	090
24670		A	Treat ulnar fracture	2.54	4.38	3.82	3.00	2.78	0.33	7.25	6.69	5.87	5.65	090
24675		A	Treat ulnar fracture	4.72	7.27	6.41	5.36	4.97	0.65	12.64	11.78	10.73	10.34	090
24685		A	Treat ulnar fracture	8.80	NA	NA	9.13	9.13	1.23	NA	NA	19.16	19.16	090
24800		A	Fusion of elbow joint	11.20	NA	NA	9.41	9.93	1.41	NA	NA	22.02	22.54	090
24802		A	Fusion/graft of elbow joint	13.69	NA	NA	11.10	11.63	1.89	NA	NA	26.68	27.21	090
24900		A	Amputation of upper arm	9.60	NA	NA	10.61	10.04	1.18	NA	NA	21.39	20.82	090
24920		A	Amputation of upper arm	9.54	NA	NA	11.85	10.73	1.22	NA	NA	22.61	21.49	090
24925		A	Amputation follow-up surgery	7.07	NA	NA	8.88	8.36	0.95	NA	NA	16.90	16.38	090
24930		A	Amputation follow-up surgery	10.25	NA	NA	11.00	10.47	1.23	NA	NA	22.48	21.95	090
24931		A	Amputate upper arm & implant	12.72	NA	NA	11.26	11.48	1.56	NA	NA	25.54	25.76	090
24935		A	Revision of amputation	15.56	NA	NA	11.88	12.63	1.58	NA	NA	29.02	29.77	090
24940		C	Revision of upper arm	0.00	0.00	0.00	0.00	0.00	0.00	0.00	0.00	0.00	0.00	090
24999		C	Upper arm/elbow surgery	0.00	0.00	0.00	0.00	0.00	0.00	0.00	0.00	0.00	0.00	YYY
25000		A	Incision of tendon sheath	3.38	NA	NA	6.59	5.95	0.45	NA	NA	10.42	9.78	090
25020		A	Decompression of forearm	5.92	NA	NA	10.29	8.90	0.75	NA	NA	16.96	15.57	090
25023		A	Decompression of forearm	12.96	NA	NA	15.90	13.40	1.50	NA	NA	30.36	27.86	090
25028		A	Drainage of forearm lesion	5.25	NA	NA	9.39	7.60	0.61	NA	NA	15.25	13.46	090
25031		A	Drainage of forearm bursa	4.14	NA	NA	9.02	6.95	0.50	NA	NA	13.66	11.59	090
25035		A	Treat forearm bone lesion	7.36	NA	NA	15.16	13.08	0.98	NA	NA	23.50	21.42	090
25040		A	Explore/treat wrist joint	7.18	NA	NA	8.56	7.97	0.96	NA	NA	16.70	16.11	090
25065		A	Biopsy forearm soft tissues	1.99	2.45	2.04	2.45	1.94	0.12	4.56	4.15	4.56	4.05	010
25066		A	Biopsy forearm soft tissues	4.13	NA	NA	7.36	5.94	0.49	NA	NA	11.98	10.56	090
25075		A	Removal of forearm lesion	3.74	NA	NA	6.81	5.70	0.40	NA	NA	10.95	9.84	090
25076		A	Removal of forearm lesion	4.92	NA	NA	11.51	9.66	0.59	NA	NA	17.02	15.17	090
25077		A	Remove tumor, forearm/wrist	9.76	NA	NA	15.13	13.65	1.10	NA	NA	25.99	24.51	090
25085		A	Incision of wrist capsule	5.50	NA	NA	9.88	8.66	0.71	NA	NA	16.09	14.87	090
25100		A	Biopsy of wrist joint	3.90	NA	NA	6.64	6.15	0.50	NA	NA	11.04	10.55	090
25101		A	Explore/treat wrist joint	4.69	NA	NA	7.23	6.82	0.60	NA	NA	12.52	12.11	090
25105		A	Remove wrist joint lining	5.85	NA	NA	10.05	9.29	0.77	NA	NA	16.67	15.91	090
25107		A	Remove wrist joint cartilage	6.43	NA	NA	10.23	9.11	0.82	NA	NA	17.48	16.36	090
25110		A	Remove wrist tendon lesion	3.92	NA	NA	7.72	6.55	0.48	NA	NA	12.12	10.95	090
25111		A	Remove wrist tendon lesion	3.39	NA	NA	6.01	5.38	0.42	NA	NA	9.82	9.19	090
25112		A	Reremove wrist tendon lesion	4.53	NA	NA	6.88	6.17	0.54	NA	NA	11.95	11.24	090
25115		A	Remove wrist/forearm lesion	8.82	NA	NA	15.45	13.53	1.11	NA	NA	25.38	23.46	090
25116		A	Remove wrist/forearm lesion	7.11	NA	NA	14.43	12.95	0.90	NA	NA	22.44	20.96	090
25118		A	Excise wrist tendon sheath	4.37	NA	NA	7.17	6.68	0.55	NA	NA	12.09	11.60	090
25119		A	Partial removal of ulna	6.04	NA	NA	10.00	9.30	0.80	NA	NA	16.84	16.14	090
25120		A	Removal of forearm lesion	6.10	NA	NA	13.26	11.72	0.81	NA	NA	20.17	18.63	090
25125		A	Remove/graft forearm lesion	7.48	NA	NA	14.52	12.75	1.02	NA	NA	23.02	21.25	090
25126		A	Remove/graft forearm lesion	7.55	NA	NA	13.95	12.31	1.00	NA	NA	22.50	20.86	090
25130		A	Removal of wrist lesion	5.26	NA	NA	7.50	6.77	0.66	NA	NA	13.42	12.69	090
25135		A	Remove & graft wrist lesion	6.89	NA	NA	8.29	7.70	0.89	NA	NA	16.07	15.48	090
25136		A	Remove & graft wrist lesion	5.97	NA	NA	6.38	6.07	0.58	NA	NA	12.93	12.62	090
25145		A	Remove forearm bone lesion	6.37	NA	NA	14.00	12.12	0.82	NA	NA	21.19	19.31	090
25150		A	Partial removal of ulna	7.09	NA	NA	10.98	10.05	0.96	NA	NA	19.03	18.10	090
25151		A	Partial removal of radius	7.39	NA	NA	13.77	11.89	0.93	NA	NA	22.09	20.21	090
25170		A	Extensive forearm surgery	11.09	NA	NA	16.06	14.70	1.52	NA	NA	28.67	27.31	090
25210		A	Removal of wrist bone	5.95	NA	NA	8.02	7.34	0.73	NA	NA	14.70	14.02	090
25215		A	Removal of wrist bones	7.89	NA	NA	11.15	10.72	1.02	NA	NA	20.06	19.63	090
25230		A	Partial removal of radius	5.23	NA	NA	7.44	7.09	0.66	NA	NA	13.33	12.98	090

[1] CPT codes and descriptions only are copyright 2000 American Medical Association. All Rights Reserved. Applicable FARS/DFARS Apply.
[2] Copyright 1994 American Dental Association. All rights reserved.
[3] + Indicates RVUs are not used for Medicare payment.
[4] PE RVUs = Practice Expense Relative Value Units.

ADDENDUM B.—RELATIVE VALUE UNITS (RVU'S) AND RELATED INFORMATION—Continued

CPT[1]/ HCPCS[2]	MOD	Status	Description	Physician Work RVUs[3]	Fully Implemented Non-Facility PE RVUs	Year 2001 Transitional Non-Facility PE RVUs	Fully Implemented Facility PE RVUs	Year 2001 Transitional Facility PE RVUs	Mal-Practice RVUs	Fully Implemented Non-Facility Total	Year 2001 Transitional Non-Facility Total	Fully Implemented Facility Total	Year 2001 Transitional Facility Total	Global
25240		A	Partial removal of ulna	5.17	NA	NA	9.61	8.65	0.69	NA	NA	15.47	14.51	090
25246		A	Injection for wrist x-ray	1.45	9.80	7.49	0.52	0.53	0.07	11.32	9.01	2.04	2.05	000
25248		A	Remove forearm foreign body	5.14	NA	NA	9.04	7.37	0.54	NA	NA	14.72	13.05	090
25250		A	Removal of wrist prosthesis	6.60	NA	NA	8.15	7.64	0.84	NA	NA	15.59	15.08	090
25251		A	Removal of wrist prosthesis	9.57	NA	NA	11.55	10.90	1.15	NA	NA	22.27	21.62	090
25260		A	Repair forearm tendon/muscle	7.80	NA	NA	15.60	12.95	0.97	NA	NA	24.37	21.72	090
25263		A	Repair forearm tendon/muscle	7.82	NA	NA	14.95	12.78	0.94	NA	NA	23.71	21.54	090
25265		A	Repair forearm tendon/muscle	9.88	NA	NA	15.75	13.97	1.19	NA	NA	26.82	25.04	090
25270		A	Repair forearm tendon/muscle	6.00	NA	NA	14.52	11.80	0.76	NA	NA	21.28	18.56	090
25272		A	Repair forearm tendon/muscle	7.04	NA	NA	15.17	12.31	0.89	NA	NA	23.10	20.24	090
25274		A	Repair forearm tendon/muscle	8.75	NA	NA	14.96	13.02	1.11	NA	NA	24.82	22.88	090
25280		A	Revise wrist/forearm tendon	7.22	NA	NA	14.31	11.88	0.91	NA	NA	22.44	20.01	090
25290		A	Incise wrist/forearm tendon	5.29	NA	NA	16.18	12.81	0.66	NA	NA	22.13	18.76	090
25295		A	Release wrist/forearm tendon	6.55	NA	NA	14.02	11.34	0.84	NA	NA	21.41	18.73	090
25300		A	Fusion of tendons at wrist	8.80	NA	NA	9.51	9.13	1.07	NA	NA	19.38	19.00	090
25301		A	Fusion of tendons at wrist	8.40	NA	NA	9.29	8.81	1.08	NA	NA	18.77	18.29	090
25310		A	Transplant forearm tendon	8.14	NA	NA	14.58	12.87	1.01	NA	NA	23.73	22.02	090
25312		A	Transplant forearm tendon	9.57	NA	NA	15.53	13.72	1.22	NA	NA	26.32	24.51	090
25315		A	Revise palsy hand tendon(s)	10.20	NA	NA	16.30	14.41	1.26	NA	NA	27.76	25.87	090
25316		A	Revise palsy hand tendon(s)	12.33	NA	NA	17.13	15.72	1.74	NA	NA	31.20	29.79	090
25320		A	Repair/revise wrist joint	10.77	NA	NA	10.68	10.34	1.32	NA	NA	22.77	22.43	090
25332		A	Revise wrist joint	11.41	NA	NA	11.17	11.09	1.46	NA	NA	24.04	23.96	090
25335		A	Realignment of hand	12.88	NA	NA	13.34	13.10	1.66	NA	NA	27.88	27.64	090
25337		A	Reconstruct ulna/radioulnar	10.17	NA	NA	12.37	11.61	1.31	NA	NA	23.85	23.09	090
25350		A	Revision of radius	8.78	NA	NA	14.82	13.18	1.17	NA	NA	24.77	23.13	090
25355		A	Revision of radius	10.17	NA	NA	15.90	14.40	1.44	NA	NA	27.51	26.01	090
25360		A	Revision of ulna	8.43	NA	NA	14.97	12.97	1.17	NA	NA	24.57	22.57	090
25365		A	Revise radius & ulna	12.40	NA	NA	16.30	15.02	1.67	NA	NA	30.37	29.09	090
25370		A	Revise radius or ulna	13.36	NA	NA	17.80	16.54	1.88	NA	NA	33.04	31.78	090
25375		A	Revise radius & ulna	13.04	NA	NA	17.62	16.85	1.84	NA	NA	32.50	31.73	090
25390		A	Shorten radius or ulna	10.40	NA	NA	15.88	14.30	1.38	NA	NA	27.66	26.08	090
25391		A	Lengthen radius or ulna	13.65	NA	NA	17.19	15.95	1.73	NA	NA	32.57	31.33	090
25392		A	Shorten radius & ulna	13.95	NA	NA	16.60	15.83	1.73	NA	NA	32.28	31.51	090
25393		A	Lengthen radius & ulna	15.87	NA	NA	16.76	16.43	1.87	NA	NA	34.50	34.17	090
25400		A	Repair radius or ulna	10.92	NA	NA	16.07	14.98	1.50	NA	NA	28.49	27.40	090
25405		A	Repair/graft radius or ulna	14.38	NA	NA	18.35	17.13	1.95	NA	NA	34.68	33.46	090
25415		A	Repair radius & ulna	13.35	NA	NA	17.45	16.19	1.87	NA	NA	32.67	31.41	090
25420		A	Repair/graft radius & ulna	16.33	NA	NA	19.23	18.41	2.20	NA	NA	37.76	36.94	090
25425		A	Repair/graft radius or ulna	13.21	NA	NA	24.28	21.47	1.61	NA	NA	39.10	36.29	090
25426		A	Repair/graft radius & ulna	15.82	NA	NA	19.50	17.81	2.23	NA	NA	37.55	35.86	090
25440		A	Repair/graft wrist bone	10.44	NA	NA	10.42	10.27	1.41	NA	NA	22.27	22.12	090
25441		A	Reconstruct wrist joint	12.90	NA	NA	11.51	11.72	1.83	NA	NA	26.24	26.45	090
25442		A	Reconstruct wrist joint	10.85	NA	NA	10.57	9.84	1.24	NA	NA	22.66	21.93	090
25443		A	Reconstruct wrist joint	10.39	NA	NA	14.29	13.26	1.30	NA	NA	25.98	24.95	090
25444		A	Reconstruct wrist joint	11.15	NA	NA	12.32	11.99	1.43	NA	NA	24.90	24.57	090
25445		A	Reconstruct wrist joint	9.69	NA	NA	12.33	12.06	1.26	NA	NA	23.28	23.01	090
25446		A	Wrist replacement	16.55	NA	NA	13.85	15.33	2.20	NA	NA	32.60	34.08	090
25447		A	Repair wrist joint(s)	10.37	NA	NA	10.42	10.43	1.34	NA	NA	22.13	22.14	090
25449		A	Remove wrist joint implant	14.49	NA	NA	14.60	13.08	1.77	NA	NA	30.86	29.34	090
25450		A	Revision of wrist joint	7.87	NA	NA	11.62	10.70	0.88	NA	NA	20.37	19.45	090
25455		A	Revision of wrist joint	9.49	NA	NA	11.16	10.73	1.07	NA	NA	21.72	21.29	090
25490		A	Reinforce radius	9.54	NA	NA	14.92	13.55	1.19	NA	NA	25.65	24.28	090
25491		A	Reinforce ulna	9.96	NA	NA	15.39	14.01	1.41	NA	NA	26.76	25.38	090
25492		A	Reinforce radius and ulna	12.33	NA	NA	14.11	13.62	1.62	NA	NA	28.06	27.57	090
25500		A	Treat fracture of radius	2.45	4.18	3.77	2.86	2.46	0.28	6.91	6.50	5.59	5.19	090
25505		A	Treat fracture of radius	5.21	7.49	6.59	5.56	5.14	0.69	13.39	12.49	11.46	11.04	090
25515		A	Treat fracture of radius	9.18	NA	NA	9.22	8.99	1.22	NA	NA	19.62	19.39	090
25520		A	Treat fracture of radius	6.26	7.81	7.42	6.24	6.24	0.85	14.92	14.53	13.35	13.35	090
25525		A	Treat fracture of radius	12.24	NA	NA	10.96	11.25	1.68	NA	NA	24.88	25.17	090
25526		A	Treat fracture of radius	12.98	NA	NA	14.15	13.83	1.80	NA	NA	28.93	28.61	090
25530		A	Treat fracture of ulna	2.09	4.09	3.73	2.78	2.40	0.27	6.45	6.09	5.14	4.76	090
25535		A	Treat fracture of ulna	5.14	7.49	6.59	5.51	5.10	0.68	13.31	12.41	11.33	10.92	090
25545		A	Treat fracture of ulna	8.90	NA	NA	9.20	8.96	1.23	NA	NA	19.33	19.09	090
25560		A	Treat fracture radius & ulna	2.44	4.19	3.76	2.85	2.75	0.27	6.90	6.47	5.56	5.46	090
25565		A	Treat fracture radius & ulna	5.63	7.76	7.09	5.77	5.59	0.76	14.15	13.48	12.16	11.98	090
25574		A	Treat fracture radius & ulna	7.01	NA	NA	8.10	8.17	0.96	NA	NA	16.07	16.14	090
25575		A	Treat fracture radius/ulna	10.45	NA	NA	10.07	10.46	1.46	NA	NA	21.98	22.37	090
25600		A	Treat fracture radius/ulna	2.63	4.41	4.08	2.99	2.63	0.34	7.38	7.05	5.96	5.60	090
25605		A	Treat fracture radius/ulna	5.81	7.93	7.02	5.96	5.54	0.81	14.55	13.64	12.58	12.16	090
25611		A	Treat fracture radius/ulna	7.77	NA	NA	9.26	8.58	1.08	NA	NA	18.11	17.43	090
25620		A	Treat fracture radius/ulna	8.55	NA	NA	9.01	8.69	1.17	NA	NA	18.73	18.41	090
25622		A	Treat wrist bone fracture	2.61	4.38	3.90	2.98	2.55	0.33	7.32	6.84	5.92	5.49	090
25624		A	Treat wrist bone fracture	4.53	7.14	6.35	5.22	4.41	0.61	12.28	11.49	10.36	9.55	090
25628		A	Treat wrist bone fracture	8.43	NA	NA	9.06	8.73	1.14	NA	NA	18.63	18.30	090
25630		A	Treat wrist bone fracture	2.88	4.53	3.99	3.07	2.60	0.37	7.78	7.24	6.32	5.85	090
25635		A	Treat wrist bone fracture	4.39	7.18	6.30	4.16	3.58	0.39	11.96	11.08	8.94	8.36	090
25645		A	Treat wrist bone fracture	7.25	NA	NA	8.97	8.54	0.93	NA	NA	17.15	16.72	090
25650		A	Treat wrist bone fracture	3.05	4.62	4.19	3.12	2.70	0.37	8.04	7.61	6.54	6.12	090
25660		A	Treat wrist dislocation	4.76	NA	NA	5.36	4.52	0.59	NA	NA	10.71	9.87	090
25670		A	Treat wrist dislocation	7.92	NA	NA	8.85	8.56	1.07	NA	NA	17.84	17.55	090
25675		A	Treat wrist dislocation	4.67	7.16	5.99	5.15	4.48	0.57	12.40	11.23	10.39	9.72	090
25676		A	Treat wrist dislocation	8.04	NA	NA	8.91	8.67	1.10	NA	NA	18.05	17.81	090
25680		A	Treat wrist fracture	5.99	NA	NA	6.39	5.46	0.61	NA	NA	12.99	12.06	090

[1] CPT codes and descriptions only are copyright 2000 American Medical Association. All Rights Reserved. Applicable FARS/DFARS Apply.
[2] Copyright 1994 American Dental Association. All rights reserved.
[3] + Indicates RVUs are not used for Medicare payment.
[4] PE RVUs = Practice Expense Relative Value Units.

ADDENDUM B.—RELATIVE VALUE UNITS (RVU'S) AND RELATED INFORMATION—Continued

CPT[1]/ HCPCS[2]	MOD	Status	Description	Physician Work RVUs[3]	Fully Implemented Non-Facility PE RVUs	Year 2001 Transitional Non-Facility PE RVUs	Fully Implemented Facility PE RVUs	Year 2001 Transitional Facility PE RVUs	Mal-Practice RVUs	Fully Implemented Non-Facility Total	Year 2001 Transitional Non-Facility Total	Fully Implemented Facility Total	Year 2001 Transitional Facility Total	Global
25685		A	Treat wrist fracture	9.78	NA	NA	9.54	9.54	1.25	NA	NA	20.57	20.57	090
25690		A	Treat wrist dislocation	5.50	NA	NA	6.86	6.47	0.78	NA	NA	13.14	12.75	090
25695		A	Treat wrist dislocation	8.34	NA	NA	8.84	8.54	1.07	NA	NA	18.25	17.95	090
25800		A	Fusion of wrist joint	9.76	NA	NA	10.00	10.42	1.30	NA	NA	21.06	21.48	090
25805		A	Fusion/graft of wrist joint	11.28	NA	NA	10.95	11.58	1.51	NA	NA	23.74	24.37	090
25810		A	Fusion/graft of wrist joint	10.57	NA	NA	10.47	11.01	1.37	NA	NA	22.41	22.95	090
25820		A	Fusion of hand bones	7.45	NA	NA	8.81	8.83	0.96	NA	NA	17.22	17.24	090
25825		A	Fuse hand bones with graft	9.27	NA	NA	9.82	10.13	1.20	NA	NA	20.29	20.60	090
25830		A	Fusion, radioulnar jnt/ulna	10.06	NA	NA	14.92	13.52	1.27	NA	NA	26.25	24.85	090
25900		A	Amputation of forearm	9.01	NA	NA	13.27	11.87	1.08	NA	NA	23.36	21.96	090
25905		A	Amputation of forearm	9.12	NA	NA	15.11	13.26	1.06	NA	NA	25.29	23.44	090
25907		A	Amputation follow-up surgery	7.80	NA	NA	13.20	11.46	1.01	NA	NA	22.01	20.27	090
25909		A	Amputation follow-up surgery	8.96	NA	NA	15.15	12.87	1.07	NA	NA	25.18	22.90	090
25915		A	Amputation of forearm	17.08	NA	NA	20.21	19.45	2.41	NA	NA	39.70	38.94	090
25920		A	Amputate hand at wrist	8.68	NA	NA	9.28	8.86	1.06	NA	NA	19.02	18.60	090
25922		A	Amputate hand at wrist	7.42	NA	NA	9.14	8.36	0.93	NA	NA	17.49	16.71	090
25924		A	Amputation follow-up surgery	8.46	NA	NA	9.22	8.95	1.07	NA	NA	18.75	18.48	090
25927		A	Amputation of hand	8.80	NA	NA	13.46	11.80	1.02	NA	NA	23.28	21.62	090
25929		A	Amputation follow-up surgery	7.59	NA	NA	7.05	6.57	0.89	NA	NA	15.53	15.05	090
25931		A	Amputation follow-up surgery	7.81	NA	NA	13.94	11.69	0.88	NA	NA	22.63	20.38	090
25999		C	Forearm or wrist surgery	0.00	0.00	0.00	0.00	0.00	0.00	0.00	0.00	0.00	0.00	YYY
26010		A	Drainage of finger abscess	1.54	4.86	3.78	3.48	2.68	0.14	6.54	5.46	5.16	4.36	010
26011		A	Drainage of finger abscess	2.19	6.80	5.52	5.69	4.69	0.25	9.24	7.96	8.13	7.13	010
26020		A	Drain hand tendon sheath	4.67	NA	NA	11.55	9.67	0.59	NA	NA	16.81	14.93	090
26025		A	Drainage of palm bursa	4.82	NA	NA	11.71	10.01	0.60	NA	NA	17.13	15.43	090
26030		A	Drainage of palm bursa(s)	5.93	NA	NA	12.14	10.66	0.72	NA	NA	18.79	17.31	090
26034		A	Treat hand bone lesion	6.23	NA	NA	13.35	11.16	0.79	NA	NA	20.37	18.18	090
26035		A	Decompress fingers/hand	9.51	NA	NA	15.30	12.88	1.12	NA	NA	25.93	23.51	090
26037		A	Decompress fingers/hand	7.25	NA	NA	11.76	10.55	0.87	NA	NA	19.88	18.67	090
26040		A	Release palm contracture	3.33	NA	NA	11.19	9.17	0.45	NA	NA	14.97	12.95	090
26045		A	Release palm contracture	5.56	NA	NA	12.37	10.59	0.74	NA	NA	18.67	16.89	090
26055		A	Incise finger tendon sheath	2.69	7.04	6.17	6.76	5.96	0.36	10.09	9.22	9.81	9.01	090
26060		A	Incision of finger tendon	2.81	NA	NA	6.66	5.30	0.35	NA	NA	9.82	8.46	090
26070		A	Explore/treat hand joint	3.69	NA	NA	10.22	8.04	0.35	NA	NA	14.26	12.08	090
26075		A	Explore/treat finger joint	3.79	NA	NA	10.82	9.14	0.40	NA	NA	15.01	13.33	090
26080		A	Explore/treat finger joint	4.24	NA	NA	11.59	9.55	0.52	NA	NA	16.35	14.31	090
26100		A	Biopsy hand joint lining	3.67	NA	NA	7.39	6.35	0.45	NA	NA	11.51	10.47	090
26105		A	Biopsy finger joint lining	3.71	NA	NA	10.68	9.14	0.45	NA	NA	14.84	13.30	090
26110		A	Biopsy finger joint lining	3.53	NA	NA	10.69	8.81	0.44	NA	NA	14.66	12.78	090
26115		A	Removal of hand lesion	3.86	7.21	5.95	7.21	5.95	0.48	11.55	10.29	11.55	10.29	090
26116		A	Removal of hand lesion	5.53	NA	NA	12.26	10.20	0.69	NA	NA	18.48	16.42	090
26117		A	Remove tumor, hand/finger	8.55	NA	NA	14.41	12.18	1.01	NA	NA	23.97	21.74	090
26121		A	Release palm contracture	7.54	NA	NA	14.23	12.92	0.94	NA	NA	22.71	21.40	090
26123		A	Release palm contracture	9.29	NA	NA	15.22	13.89	1.17	NA	NA	25.68	24.35	090
26125		A	Release palm contracture	4.61	NA	NA	2.57	2.64	0.57	NA	NA	7.75	7.82	ZZZ
26130		A	Remove wrist joint lining	5.42	NA	NA	14.77	12.44	0.65	NA	NA	20.84	18.51	090
26135		A	Revise finger joint, each	6.96	NA	NA	15.48	12.93	0.87	NA	NA	23.31	20.76	090
26140		A	Revise finger joint, each	6.17	NA	NA	14.41	12.00	0.76	NA	NA	21.34	18.93	090
26145		A	Tendon excision, palm/finger	6.32	NA	NA	14.33	12.03	0.77	NA	NA	21.42	19.12	090
26160		A	Remove tendon sheath lesion	3.15	7.20	6.03	6.96	5.85	0.39	10.74	9.57	10.50	9.39	090
26170		A	Removal of palm tendon, each	4.77	NA	NA	7.97	6.75	0.60	NA	NA	13.34	12.12	090
26180		A	Removal of finger tendon	5.18	NA	NA	7.83	6.96	0.64	NA	NA	13.65	12.78	090
26185		A	Remove finger bone	5.25	NA	NA	8.35	7.41	0.67	NA	NA	14.27	13.33	090
26200		A	Remove hand bone lesion	5.51	NA	NA	12.39	10.51	0.71	NA	NA	18.61	16.73	090
26205		A	Remove/graft bone lesion	7.70	NA	NA	14.03	12.26	0.95	NA	NA	22.68	20.91	090
26210		A	Removal of finger lesion	5.15	NA	NA	12.94	10.76	0.64	NA	NA	18.73	16.55	090
26215		A	Remove/graft finger lesion	7.10	NA	NA	13.35	11.52	0.77	NA	NA	21.22	19.39	090
26230		A	Partial removal of hand bone	6.33	NA	NA	11.81	10.01	0.84	NA	NA	18.98	17.18	090
26235		A	Partial removal, finger bone	6.19	NA	NA	11.45	9.72	0.78	NA	NA	18.42	16.69	090
26236		A	Partial removal, finger bone	5.32	NA	NA	11.29	9.52	0.66	NA	NA	17.27	15.50	090
26250		A	Extensive hand surgery	7.55	NA	NA	15.93	13.58	0.92	NA	NA	24.40	22.05	090
26255		A	Extensive hand surgery	12.43	NA	NA	16.86	15.07	1.05	NA	NA	30.34	28.55	090
26260		A	Extensive finger surgery	7.03	NA	NA	15.76	13.38	0.83	NA	NA	23.62	21.24	090
26261		A	Extensive finger surgery	9.09	NA	NA	16.90	14.77	0.84	NA	NA	26.83	24.70	090
26262		A	Partial removal of finger	5.67	NA	NA	12.80	10.89	0.70	NA	NA	19.17	17.26	090
26320		A	Removal of implant from hand	3.98	NA	NA	11.74	9.77	0.49	NA	NA	16.21	14.24	090
26350		A	Repair finger/hand tendon	5.99	NA	NA	18.01	15.07	0.73	NA	NA	24.73	21.79	090
26352		A	Repair/graft hand tendon	7.68	NA	NA	17.48	14.90	0.93	NA	NA	26.09	23.51	090
26356		A	Repair finger/hand tendon	8.07	NA	NA	19.37	16.48	0.99	NA	NA	28.43	25.54	090
26357		A	Repair finger/hand tendon	8.58	NA	NA	18.82	15.90	1.02	NA	NA	28.42	25.50	090
26358		A	Repair/graft hand tendon	9.14	NA	NA	18.56	15.93	1.07	NA	NA	28.77	26.14	090
26370		A	Repair finger/hand tendon	7.11	NA	NA	18.65	15.81	0.90	NA	NA	26.66	23.82	090
26372		A	Repair/graft hand tendon	8.76	NA	NA	18.77	15.81	1.06	NA	NA	28.59	25.63	090
26373		A	Repair finger/hand tendon	8.16	NA	NA	21.22	17.77	0.98	NA	NA	30.36	26.91	090
26390		A	Revise hand/finger tendon	9.19	NA	NA	14.49	13.03	1.09	NA	NA	24.77	23.31	090
26392		A	Repair/graft hand tendon	10.26	NA	NA	19.80	17.19	1.26	NA	NA	31.32	28.71	090
26410		A	Repair hand tendon	4.63	NA	NA	14.50	11.77	0.57	NA	NA	19.70	16.97	090
26412		A	Repair/graft hand tendon	6.31	NA	NA	14.96	12.85	0.80	NA	NA	22.07	19.96	090
26415		A	Excision, hand/finger tendon	8.34	NA	NA	14.51	12.72	0.77	NA	NA	23.62	21.83	090
26416		A	Graft hand or finger tendon	9.37	NA	NA	15.87	14.25	1.20	NA	NA	26.44	24.82	090
26418		A	Repair finger tendon	4.25	NA	NA	14.16	11.59	0.50	NA	NA	18.91	16.34	090
26420		A	Repair/graft finger tendon	6.77	NA	NA	15.68	13.30	0.83	NA	NA	23.28	20.90	090
26426		A	Repair finger/hand tendon	6.15	NA	NA	15.05	13.00	0.77	NA	NA	21.97	19.92	090

[1] CPT codes and descriptions only are copyright 2000 American Medical Association. All Rights Reserved. Applicable FARS/DFARS Apply.
[2] Copyright 1994 American Dental Association. All rights reserved.
[3] + Indicates RVUs are not used for Medicare payment.
[4] PE RVUs = Practice Expense Relative Value Units.

ADDENDUM B.—RELATIVE VALUE UNITS (RVU'S) AND RELATED INFORMATION—Continued

CPT[1]/ HCPCS[2]	MOD	Status	Description	Physician Work RVUs[3]	Fully Implemented Non-Facility PE RVUs	Year 2001 Transitional Non-Facility PE RVUs	Fully Implemented Facility PE RVUs	Year 2001 Transitional Facility PE RVUs	Mal-Practice RVUs	Fully Implemented Non-Facility Total	Year 2001 Transitional Non-Facility Total	Fully Implemented Facility Total	Year 2001 Transitional Facility Total	Global
26428		A	Repair/graft finger tendon	7.21	NA	NA	15.60	13.19	0.84	NA	NA	23.65	21.24	090
26432		A	Repair finger tendon	4.02	NA	NA	11.01	8.69	0.48	NA	NA	15.51	13.19	090
26433		A	Repair finger tendon	4.56	NA	NA	12.66	10.57	0.56	NA	NA	17.78	15.69	090
26434		A	Repair/graft finger tendon	6.09	NA	NA	12.09	10.41	0.71	NA	NA	18.89	17.21	090
26437		A	Realignment of tendons	5.82	NA	NA	12.52	10.49	0.74	NA	NA	19.08	17.05	090
26440		A	Release palm/finger tendon	5.02	NA	NA	16.09	13.04	0.62	NA	NA	21.73	18.68	090
26442		A	Release palm & finger tendon	8.16	NA	NA	18.28	14.63	0.94	NA	NA	27.38	23.73	090
26445		A	Release hand/finger tendon	4.31	NA	NA	15.96	12.85	0.54	NA	NA	20.81	17.70	090
26449		A	Release forearm/hand tendon	7.00	NA	NA	16.72	14.05	0.84	NA	NA	24.56	21.89	090
26450		A	Incision of palm tendon	3.67	NA	NA	7.26	6.06	0.46	NA	NA	11.39	10.19	090
26455		A	Incision of finger tendon	3.64	NA	NA	7.52	6.15	0.47	NA	NA	11.63	10.26	090
26460		A	Incise hand/finger tendon	3.46	NA	NA	7.09	5.79	0.44	NA	NA	10.99	9.69	090
26471		A	Fusion of finger tendons	5.73	NA	NA	12.48	10.49	0.73	NA	NA	18.94	16.95	090
26474		A	Fusion of finger tendons	5.32	NA	NA	12.82	10.87	0.69	NA	NA	18.83	16.88	090
26476		A	Tendon lengthening	5.18	NA	NA	12.78	10.37	0.62	NA	NA	18.58	16.17	090
26477		A	Tendon shortening	5.15	NA	NA	12.24	10.26	0.60	NA	NA	17.99	16.01	090
26478		A	Lengthening of hand tendon	5.80	NA	NA	12.59	10.61	0.77	NA	NA	19.16	17.18	090
26479		A	Shortening of hand tendon	5.74	NA	NA	12.82	11.05	0.76	NA	NA	19.32	17.55	090
26480		A	Transplant hand tendon	6.69	NA	NA	17.21	14.68	0.84	NA	NA	24.74	22.21	090
26483		A	Transplant/graft hand tendon	8.29	NA	NA	18.04	15.84	1.03	NA	NA	27.36	25.16	090
26485		A	Transplant palm tendon	7.70	NA	NA	17.12	14.60	0.94	NA	NA	25.76	23.24	090
26489		A	Transplant/graft palm tendon	9.55	NA	NA	16.57	13.35	0.98	NA	NA	27.10	23.88	090
26490		A	Revise thumb tendon	8.41	NA	NA	13.78	12.45	1.05	NA	NA	23.24	21.91	090
26492		A	Tendon transfer with graft	9.62	NA	NA	14.89	13.54	1.19	NA	NA	25.70	24.35	090
26494		A	Hand tendon/muscle transfer	8.47	NA	NA	14.21	12.63	1.13	NA	NA	23.81	22.23	090
26496		A	Revise thumb tendon	9.59	NA	NA	14.17	13.00	1.17	NA	NA	24.93	23.76	090
26497		A	Finger tendon transfer	9.57	NA	NA	14.43	13.00	1.17	NA	NA	25.17	23.74	090
26498		A	Finger tendon transfer	14.00	NA	NA	16.72	15.74	1.74	NA	NA	32.46	31.48	090
26499		A	Revision of finger	8.98	NA	NA	15.73	13.90	0.94	NA	NA	25.65	23.82	090
26500		A	Hand tendon reconstruction	5.96	NA	NA	13.22	10.86	0.66	NA	NA	19.84	17.48	090
26502		A	Hand tendon reconstruction	7.14	NA	NA	14.34	12.19	0.87	NA	NA	22.35	20.20	090
26504		A	Hand tendon reconstruction	7.47	NA	NA	9.92	9.26	0.84	NA	NA	18.23	17.57	090
26508		A	Release thumb contracture	6.01	NA	NA	13.12	10.97	0.76	NA	NA	19.89	17.74	090
26510		A	Thumb tendon transfer	5.43	NA	NA	12.52	10.52	0.71	NA	NA	18.66	16.66	090
26516		A	Fusion of knuckle joint	7.15	NA	NA	13.26	11.07	0.90	NA	NA	21.31	19.12	090
26517		A	Fusion of knuckle joints	8.83	NA	NA	13.63	12.14	0.96	NA	NA	23.42	21.93	090
26518		A	Fusion of knuckle joints	9.02	NA	NA	13.33	11.77	1.13	NA	NA	23.48	21.92	090
26520		A	Release knuckle contracture	5.30	NA	NA	16.37	13.49	0.65	NA	NA	22.32	19.44	090
26525		A	Release finger contracture	5.33	NA	NA	16.76	13.56	0.66	NA	NA	22.75	19.55	090
26530		A	Revise knuckle joint	6.69	NA	NA	16.92	14.09	0.86	NA	NA	24.47	21.64	090
26531		A	Revise knuckle with implant	7.91	NA	NA	17.34	14.81	1.01	NA	NA	26.26	23.73	090
26535		A	Revise finger joint	5.24	NA	NA	9.17	8.19	0.66	NA	NA	15.07	14.09	090
26536		A	Revise/implant finger joint	6.37	NA	NA	16.01	13.91	0.80	NA	NA	23.18	21.08	090
26540		A	Repair hand joint	6.43	NA	NA	13.41	11.86	0.81	NA	NA	20.65	19.10	090
26541		A	Repair hand joint with graft	8.62	NA	NA	14.78	13.51	1.12	NA	NA	24.52	23.25	090
26542		A	Repair hand joint with graft	6.78	NA	NA	12.82	11.15	0.87	NA	NA	20.47	18.80	090
26545		A	Reconstruct finger joint	6.92	NA	NA	14.05	11.97	0.79	NA	NA	21.76	19.68	090
26546		A	Repair nonunion hand	8.92	NA	NA	14.06	12.75	1.14	NA	NA	24.12	22.81	090
26548		A	Reconstruct finger joint	8.03	NA	NA	14.23	12.24	0.98	NA	NA	23.24	21.25	090
26550		A	Construct thumb replacement	21.24	NA	NA	19.62	20.09	1.80	NA	NA	42.66	43.13	090
26551		A	Great toe-hand transfer	46.58	NA	NA	28.61	32.92	6.57	NA	NA	81.76	86.07	090
26553		A	Single transfer, toe-hand	46.27	NA	NA	28.33	32.63	1.99	NA	NA	76.59	80.89	090
26554		A	Double transfer, toe-hand	54.95	NA	NA	33.90	39.01	7.76	NA	NA	96.61	101.72	090
26555		A	Positional change of finger	16.63	NA	NA	22.41	20.99	2.13	NA	NA	41.17	39.75	090
26556		A	Toe joint transfer	47.26	NA	NA	28.88	33.24	6.67	NA	NA	82.81	87.17	090
26560		A	Repair of web finger	5.38	NA	NA	13.01	11.02	0.60	NA	NA	18.99	17.00	090
26561		A	Repair of web finger	10.92	NA	NA	13.50	12.54	0.69	NA	NA	25.11	24.15	090
26562		A	Repair of web finger	9.68	NA	NA	9.60	10.09	0.98	NA	NA	20.26	20.75	090
26565		A	Correct metacarpal flaw	6.74	NA	NA	13.16	11.45	0.84	NA	NA	20.74	19.03	090
26567		A	Correct finger deformity	6.82	NA	NA	13.05	10.95	0.84	NA	NA	20.71	18.61	090
26568		A	Lengthen metacarpal/finger	9.08	NA	NA	17.58	15.48	1.10	NA	NA	27.76	25.66	090
26580		A	Repair hand deformity	18.18	NA	NA	16.65	17.07	1.46	NA	NA	36.29	36.71	090
26585		A	Repair finger deformity	14.05	NA	NA	14.49	14.38	1.08	NA	NA	29.62	29.51	090
26587		C	Reconstruct extra finger	0.00	0.00	0.00	0.00	0.00	0.00	0.00	0.00	0.00	0.00	090
26590		A	Repair finger deformity	17.96	NA	NA	13.95	14.98	1.32	NA	NA	33.23	34.26	090
26591		A	Repair muscles of hand	3.25	NA	NA	12.58	10.06	0.37	NA	NA	16.20	13.68	090
26593		A	Release muscles of hand	5.31	NA	NA	11.76	9.94	0.64	NA	NA	17.71	15.89	090
26596		A	Excision constricting tissue	8.95	NA	NA	9.03	9.01	0.87	NA	NA	18.85	18.83	090
26597		A	Release of scar contracture	9.82	NA	NA	15.29	13.64	1.20	NA	NA	26.31	24.66	090
26600		A	Treat metacarpal fracture	1.96	4.04	3.45	2.72	2.25	0.25	6.25	5.66	4.93	4.46	090
26605		A	Treat metacarpal fracture	2.85	5.80	4.97	4.19	3.46	0.38	9.03	8.20	7.42	6.69	090
26607		A	Treat metacarpal fracture	5.36	NA	NA	7.89	6.88	0.70	NA	NA	13.95	12.94	090
26608		A	Treat metacarpal fracture	5.36	NA	NA	8.03	6.99	0.73	NA	NA	14.12	13.08	090
26615		A	Treat metacarpal fracture	5.33	NA	NA	7.66	7.07	0.70	NA	NA	13.69	13.10	090
26641		A	Treat thumb dislocation	3.94	6.59	5.24	4.79	3.89	0.42	10.95	9.60	9.15	8.25	090
26645		A	Treat thumb fracture	4.41	6.99	5.84	5.11	4.43	0.54	11.94	10.79	10.06	9.38	090
26650		A	Treat thumb fracture	5.72	NA	NA	8.20	7.24	0.77	NA	NA	14.69	13.73	090
26665		A	Treat thumb fracture	7.60	NA	NA	8.62	8.20	0.97	NA	NA	17.19	16.77	090
26670		A	Treat hand dislocation	3.69	6.17	4.89	4.66	3.76	0.36	10.22	8.94	8.71	7.81	090
26675		A	Treat hand dislocation	4.64	5.73	5.48	4.42	4.49	0.56	10.93	10.68	9.62	9.69	090
26676		A	Pin hand dislocation	5.52	NA	NA	8.10	7.39	0.76	NA	NA	14.38	13.67	090
26685		A	Treat hand dislocation	6.98	NA	NA	8.23	7.74	0.95	NA	NA	16.16	15.67	090
26686		A	Treat hand dislocation	7.94	NA	NA	9.08	8.52	1.05	NA	NA	18.07	17.51	090

[1] CPT codes and descriptions only are copyright 2000 American Medical Association. All Rights Reserved. Applicable FARS/DFARS Apply.
[2] Copyright 1994 American Dental Association. All rights reserved.
[3] + Indicates RVUs are not used for Medicare payment.
[4] PE RVUs = Practice Expense Relative Value Units.

ADDENDUM B.—RELATIVE VALUE UNITS (RVU'S) AND RELATED INFORMATION—Continued

CPT[1]/ HCPCS[2]	MOD	Status	Description	Physician Work RVUs[3]	Fully Implemented Non-Facility PE RVUs	Year 2001 Transitional Non-Facility PE RVUs	Fully Implemented Facility PE RVUs	Year 2001 Transitional Facility PE RVUs	Mal-Practice RVUs	Fully Implemented Non-Facility Total	Year 2001 Transitional Non-Facility Total	Fully Implemented Facility Total	Year 2001 Transitional Facility Total	Global
26700		A	Treat knuckle dislocation	3.69	4.73	3.79	2.81	2.35	0.35	8.77	7.83	6.85	6.39	090
26705		A	Treat knuckle dislocation	4.19	5.90	4.91	4.06	3.53	0.50	10.59	9.60	8.75	8.22	090
26706		A	Pin knuckle dislocation	5.12	NA	NA	5.47	5.37	0.64	NA	NA	11.23	11.13	090
26715		A	Treat knuckle dislocation	5.74	NA	NA	7.79	6.96	0.75	NA	NA	14.28	13.45	090
26720		A	Treat finger fracture, each	1.66	2.82	2.41	1.57	1.33	0.20	4.68	4.27	3.43	3.19	090
26725		A	Treat finger fracture, each	3.33	4.81	4.03	3.02	2.48	0.43	8.57	7.79	6.78	6.24	090
26727		A	Treat finger fracture, each	5.23	NA	NA	8.21	6.82	0.69	NA	NA	14.13	12.74	090
26735		A	Treat finger fracture, each	5.98	NA	NA	8.11	7.10	0.77	NA	NA	14.86	13.85	090
26740		A	Treat finger fracture, each	1.94	3.51	2.95	2.40	1.96	0.24	5.69	5.13	4.58	4.14	090
26742		A	Treat finger fracture, each	3.85	7.01	5.80	5.08	4.35	0.49	11.35	10.14	9.42	8.69	090
26746		A	Treat finger fracture, each	5.81	NA	NA	8.20	7.44	0.74	NA	NA	14.75	13.99	090
26750		A	Treat finger fracture, each	1.70	3.35	2.74	2.21	1.88	0.19	5.24	4.63	4.10	3.77	090
26755		A	Treat finger fracture, each	3.10	4.69	3.81	2.88	2.45	0.37	8.16	7.28	6.35	5.92	090
26756		A	Pin finger fracture, each	4.39	NA	NA	8.02	6.53	0.56	NA	NA	12.97	11.48	090
26765		A	Treat finger fracture, each	4.17	NA	NA	7.17	6.10	0.51	NA	NA	11.85	10.78	090
26770		A	Treat finger dislocation	3.02	4.47	3.56	2.54	2.11	0.27	7.76	6.85	5.83	5.40	090
26775		A	Treat finger dislocation	3.71	5.76	4.63	3.73	3.11	0.43	9.90	8.77	7.87	7.25	090
26776		A	Pin finger dislocation	4.80	NA	NA	8.16	6.69	0.63	NA	NA	13.59	12.12	090
26785		A	Treat finger dislocation	4.21	NA	NA	7.14	6.16	0.54	NA	NA	11.89	10.91	090
26820		A	Thumb fusion with graft	8.26	NA	NA	14.62	12.77	1.11	NA	NA	23.99	22.14	090
26841		A	Fusion of thumb	7.13	NA	NA	13.55	11.84	0.97	NA	NA	21.65	19.94	090
26842		A	Thumb fusion with graft	8.24	NA	NA	14.30	13.05	1.10	NA	NA	23.64	22.39	090
26843		A	Fusion of hand joint	7.61	NA	NA	13.47	11.83	0.99	NA	NA	22.07	20.43	090
26844		A	Fusion/graft of hand joint	8.73	NA	NA	13.92	12.44	1.12	NA	NA	23.77	22.29	090
26850		A	Fusion of knuckle	6.97	NA	NA	12.95	10.97	0.89	NA	NA	20.81	18.83	090
26852		A	Fusion of knuckle with graft	8.46	NA	NA	13.85	11.94	1.05	NA	NA	23.36	21.45	090
26860		A	Fusion of finger joint	4.69	NA	NA	11.91	10.10	0.60	NA	NA	17.20	15.39	090
26861		A	Fusion of finger jnt, add-on	1.74	NA	NA	0.97	1.25	0.22	NA	NA	2.93	3.21	ZZZ
26862		A	Fusion/graft of finger joint	7.37	NA	NA	13.47	11.50	0.92	NA	NA	21.76	19.79	090
26863		A	Fuse/graft added joint	3.90	NA	NA	2.20	2.57	0.51	NA	NA	6.61	6.98	ZZZ
26910		A	Amputate metacarpal bone	7.60	NA	NA	13.09	11.22	0.90	NA	NA	21.59	19.72	090
26951		A	Amputation of finger/thumb	4.59	NA	NA	11.69	9.55	0.56	NA	NA	16.84	14.70	090
26952		A	Amputation of finger/thumb	6.31	NA	NA	13.00	10.84	0.74	NA	NA	20.05	17.89	090
26989		C	Hand/finger surgery	0.00	0.00	0.00	0.00	0.00	0.00	0.00	0.00	0.00	0.00	YYY
26990		A	Drainage of pelvis lesion	7.48	NA	NA	14.64	11.82	0.92	NA	NA	23.04	20.22	090
26991		A	Drainage of pelvis bursa	6.68	10.23	8.16	9.12	7.33	0.85	17.76	15.69	16.65	14.86	090
26992		A	Drainage of bone lesion	13.02	NA	NA	18.42	15.55	1.75	NA	NA	33.19	30.32	090
27000		A	Incision of hip tendon	5.62	NA	NA	6.94	5.71	0.76	NA	NA	13.32	12.09	090
27001		A	Incision of hip tendon	6.94	NA	NA	7.78	6.47	0.95	NA	NA	15.67	14.36	090
27003		A	Incision of hip tendon	7.34	NA	NA	8.47	8.19	0.93	NA	NA	16.74	16.46	090
27005		A	Incision of hip tendon	9.66	NA	NA	9.89	8.33	1.36	NA	NA	20.91	19.35	090
27006		A	Incision of hip tendons	9.68	NA	NA	9.82	8.63	1.33	NA	NA	20.83	19.64	090
27025		A	Incision of hip/thigh fascia	11.16	NA	NA	9.71	8.94	1.38	NA	NA	22.25	21.48	090
27030		A	Drainage of hip joint	13.01	NA	NA	11.74	11.90	1.81	NA	NA	26.56	26.72	090
27033		A	Exploration of hip joint	13.39	NA	NA	11.91	12.06	1.87	NA	NA	27.17	27.32	090
27035		A	Denervation of hip joint	16.69	NA	NA	15.58	14.90	1.70	NA	NA	33.97	33.29	090
27036		A	Excision of hip joint/muscle	12.88	NA	NA	13.11	12.94	1.80	NA	NA	27.79	27.62	090
27040		A	Biopsy of soft tissues	2.87	5.79	4.54	3.67	2.95	0.21	8.87	7.62	6.75	6.03	010
27041		A	Biopsy of soft tissues	9.89	NA	NA	8.23	6.90	1.01	NA	NA	19.13	17.80	090
27047		A	Remove hip/pelvis lesion	7.45	9.26	7.46	6.90	5.69	0.79	17.50	15.70	15.14	13.93	090
27048		A	Remove hip/pelvis lesion	6.25	NA	NA	7.61	6.88	0.73	NA	NA	14.59	13.86	090
27049		A	Remove tumor, hip/pelvis	13.66	NA	NA	12.83	12.37	1.60	NA	NA	28.09	27.63	090
27050		A	Biopsy of sacroiliac joint	4.36	NA	NA	6.47	6.15	0.53	NA	NA	11.36	11.04	090
27052		A	Biopsy of hip joint	6.23	NA	NA	7.70	7.63	0.85	NA	NA	14.78	14.71	090
27054		A	Removal of hip joint lining	8.54	NA	NA	10.00	10.05	1.17	NA	NA	19.71	19.76	090
27060		A	Removal of ischial bursa	5.43	NA	NA	7.51	6.70	0.60	NA	NA	13.54	12.73	090
27062		A	Remove femur lesion/bursa	5.37	NA	NA	6.76	6.22	0.74	NA	NA	12.87	12.33	090
27065		A	Removal of hip bone lesion	5.90	NA	NA	8.00	7.52	0.76	NA	NA	14.66	14.18	090
27066		A	Removal of hip bone lesion	10.33	NA	NA	11.59	10.84	1.42	NA	NA	23.34	22.59	090
27067		A	Remove/graft hip bone lesion	13.83	NA	NA	13.57	13.33	1.95	NA	NA	29.35	29.11	090
27070		A	Partial removal of hip bone	10.72	NA	NA	15.98	14.00	1.36	NA	NA	28.06	26.08	090
27071		A	Partial removal of hip bone	11.46	NA	NA	17.00	15.06	1.51	NA	NA	29.97	28.03	090
27075		A	Extensive hip surgery	17.23	NA	NA	16.36	15.94	2.22	NA	NA	35.81	35.39	090
27076		A	Extensive hip surgery	22.12	NA	NA	19.45	19.03	2.86	NA	NA	44.43	44.01	090
27077		A	Extensive hip surgery	23.13	NA	NA	18.67	19.15	3.18	NA	NA	44.98	45.46	090
27078		A	Extensive hip surgery	13.44	NA	NA	14.31	13.23	1.67	NA	NA	29.42	28.34	090
27079		A	Extensive hip surgery	13.75	NA	NA	14.21	13.00	1.86	NA	NA	29.82	28.61	090
27080		A	Removal of tail bone	6.39	NA	NA	7.57	6.98	0.80	NA	NA	14.76	14.17	090
27086		A	Remove hip foreign body	1.87	5.06	3.95	3.76	2.90	0.17	7.10	5.99	5.80	4.94	010
27087		A	Remove hip foreign body	8.54	NA	NA	8.40	7.28	1.09	NA	NA	18.03	16.91	090
27090		A	Removal of hip prosthesis	11.15	NA	NA	10.64	10.45	1.55	NA	NA	23.34	23.15	090
27091		A	Removal of hip prosthesis	22.14	NA	NA	16.74	17.93	3.11	NA	NA	41.99	43.18	090
27093		A	Injection for hip x-ray	1.30	11.51	8.86	0.51	0.61	0.09	12.90	10.25	1.90	2.00	000
27095		A	Injection for hip x-ray	1.50	9.74	7.56	0.53	0.65	0.10	11.34	9.16	2.13	2.25	000
27096		A	Inject sacroiliac joint	1.40	11.08	11.08	0.54	0.54	0.08	12.56	12.56	2.02	2.02	000
27097		A	Revision of hip tendon	8.80	NA	NA	9.29	9.06	1.22	NA	NA	19.31	19.08	090
27098		A	Transfer tendon to pelvis	8.83	NA	NA	9.46	9.19	1.24	NA	NA	19.53	19.26	090
27100		A	Transfer of abdominal muscle	11.08	NA	NA	11.72	10.87	1.57	NA	NA	24.37	23.52	090
27105		A	Transfer of spinal muscle	11.77	NA	NA	11.73	10.40	1.66	NA	NA	25.16	23.83	090
27110		A	Transfer of iliopsoas muscle	13.26	NA	NA	11.14	11.23	1.38	NA	NA	25.78	25.87	090
27111		A	Transfer of iliopsoas muscle	12.15	NA	NA	10.68	11.17	1.48	NA	NA	24.31	24.80	090
27120		A	Reconstruction of hip socket	18.01	NA	NA	13.95	15.37	2.45	NA	NA	34.41	35.83	090
27122		A	Reconstruction of hip socket	14.98	NA	NA	13.50	14.60	2.08	NA	NA	30.56	31.66	090

[1] CPT codes and descriptions only are copyright 2000 American Medical Association. All Rights Reserved. Applicable FARS/DFARS Apply.
[2] Copyright 1994 American Dental Association. All rights reserved.
[3] + Indicates RVUs are not used for Medicare payment.
[4] PE RVUs = Practice Expense Relative Value Units.

ADDENDUM B.—RELATIVE VALUE UNITS (RVU'S) AND RELATED INFORMATION—Continued

CPT[1]/ HCPCS[2]	MOD	Status	Description	Physician Work RVUs[3]	Fully Implemented Non-Facility PE RVUs	Year 2001 Transitional Non-Facility PE RVUs	Fully Implemented Facility PE RVUs	Year 2001 Transitional Facility PE RVUs	Mal-Practice RVUs	Fully Implemented Non-Facility Total	Year 2001 Transitional Non-Facility Total	Fully Implemented Facility Total	Year 2001 Transitional Facility Total	Global
27125		A	Partial hip replacement	14.69	NA	NA	13.14	14.24	2.05	NA	NA	29.88	30.98	090
27130		A	Total hip replacement	20.12	NA	NA	16.26	18.20	2.82	NA	NA	39.20	41.14	090
27132		A	Total hip replacement	23.30	NA	NA	18.07	20.51	3.26	NA	NA	44.63	47.07	090
27134		A	Revise hip joint replacement	28.52	NA	NA	20.79	24.10	3.97	NA	NA	53.28	56.59	090
27137		A	Revise hip joint replacement	21.17	NA	NA	16.92	19.01	2.97	NA	NA	41.06	43.15	090
27138		A	Revise hip joint replacement	22.17	NA	NA	17.49	19.69	3.11	NA	NA	42.77	44.97	090
27140		A	Transplant femur ridge	12.24	NA	NA	11.32	11.49	1.67	NA	NA	25.23	25.40	090
27146		A	Incision of hip bone	17.43	NA	NA	15.05	14.24	2.27	NA	NA	34.75	33.94	090
27147		A	Revision of hip bone	20.58	NA	NA	16.98	17.34	2.61	NA	NA	40.17	40.53	090
27151		A	Incision of hip bones	22.51	NA	NA	18.71	18.84	3.12	NA	NA	44.34	44.47	090
27156		A	Revision of hip bones	24.63	NA	NA	19.63	19.69	3.48	NA	NA	47.74	47.80	090
27158		A	Revision of pelvis	19.74	NA	NA	17.11	16.75	2.60	NA	NA	39.45	39.09	090
27161		A	Incision of neck of femur	16.71	NA	NA	13.71	14.17	2.32	NA	NA	32.74	33.20	090
27165		A	Incision/fixation of femur	17.91	NA	NA	14.27	15.25	2.51	NA	NA	34.69	35.67	090
27170		A	Repair/graft femur head/neck	16.07	NA	NA	13.36	14.47	2.20	NA	NA	31.63	32.74	090
27175		A	Treat slipped epiphysis	8.46	NA	NA	6.93	5.52	1.19	NA	NA	16.58	15.17	090
27176		A	Treat slipped epiphysis	12.05	NA	NA	9.74	10.13	1.68	NA	NA	23.47	23.86	090
27177		A	Treat slipped epiphysis	15.08	NA	NA	11.27	11.82	2.11	NA	NA	28.46	29.01	090
27178		A	Treat slipped epiphysis	11.99	NA	NA	9.28	9.80	1.68	NA	NA	22.95	23.47	090
27179		A	Revise head/neck of femur	12.98	NA	NA	9.62	10.24	1.84	NA	NA	24.44	25.06	090
27181		A	Treat slipped epiphysis	14.68	NA	NA	10.44	11.40	1.74	NA	NA	26.86	27.82	090
27185		A	Revision of femur epiphysis	9.18	NA	NA	9.66	8.00	1.29	NA	NA	20.13	18.47	090
27187		A	Reinforce hip bones	13.54	NA	NA	12.74	13.60	1.89	NA	NA	28.17	29.03	090
27193		A	Treat pelvic ring fracture	5.56	6.96	5.88	5.22	4.57	0.77	13.29	12.21	11.55	10.90	090
27194		A	Treat pelvic ring fracture	9.65	9.13	7.91	7.47	6.66	1.32	20.10	18.88	18.44	17.63	090
27200		A	Treat tail bone fracture	1.84	2.86	2.55	1.70	1.68	0.22	4.92	4.61	3.76	3.74	090
27202		A	Treat tail bone fracture	7.04	NA	NA	18.67	15.67	0.69	NA	NA	26.40	23.40	090
27215		A	Treat pelvic fracture(s)	10.05	NA	NA	9.86	10.40	1.37	NA	NA	21.28	21.82	090
27216		A	Treat pelvic ring fracture	15.19	NA	NA	14.71	12.20	2.15	NA	NA	32.05	29.54	090
27217		A	Treat pelvic ring fracture	14.11	NA	NA	12.20	13.10	1.95	NA	NA	28.26	29.16	090
27218		A	Treat pelvic ring fracture	20.15	NA	NA	15.73	15.75	2.85	NA	NA	38.73	38.75	090
27220		A	Treat hip socket fracture	6.18	7.30	6.63	5.56	5.33	0.85	14.33	13.66	12.59	12.36	090
27222		A	Treat hip socket fracture	12.70	NA	NA	9.85	9.12	1.77	NA	NA	24.32	23.59	090
27226		A	Treat hip wall fracture	14.91	NA	NA	12.71	13.82	2.07	NA	NA	29.69	30.80	090
27227		A	Treat hip fracture(s)	23.45	NA	NA	16.85	17.98	3.24	NA	NA	43.54	44.67	090
27228		A	Treat hip fracture(s)	27.16	NA	NA	19.05	19.70	3.77	NA	NA	49.98	50.63	090
27230		A	Treat thigh fracture	5.50	7.28	6.36	5.83	5.27	0.73	13.51	12.59	12.06	11.50	090
27232		A	Treat thigh fracture	10.68	NA	NA	8.81	9.05	1.45	NA	NA	20.94	21.18	090
27235		A	Treat thigh fracture	12.16	NA	NA	10.58	11.57	1.71	NA	NA	24.45	25.44	090
27236		A	Treat thigh fracture	15.60	NA	NA	12.30	13.81	2.18	NA	NA	30.08	31.59	090
27238		A	Treat thigh fracture	5.52	NA	NA	5.91	5.77	0.76	NA	NA	12.19	12.05	090
27240		A	Treat thigh fracture	12.50	NA	NA	9.84	10.01	1.69	NA	NA	24.03	24.20	090
27244		A	Treat thigh fracture	15.94	NA	NA	12.54	13.83	2.23	NA	NA	30.71	32.00	090
27245		A	Treat thigh fracture	20.31	NA	NA	15.00	15.67	2.85	NA	NA	38.16	38.83	090
27246		A	Treat thigh fracture	4.71	6.93	6.25	5.51	5.18	0.66	12.30	11.62	10.88	10.55	090
27248		A	Treat thigh fracture	10.45	NA	NA	9.50	10.25	1.45	NA	NA	21.40	22.15	090
27250		A	Treat hip dislocation	6.95	NA	NA	6.02	5.38	0.68	NA	NA	13.65	13.01	090
27252		A	Treat hip dislocation	10.39	NA	NA	7.88	7.09	1.37	NA	NA	19.64	18.85	090
27253		A	Treat hip dislocation	12.92	NA	NA	10.50	11.44	1.81	NA	NA	25.23	26.17	090
27254		A	Treat hip dislocation	18.26	NA	NA	13.68	13.92	2.52	NA	NA	34.46	34.70	090
27256		A	Treat hip dislocation	4.12	NA	NA	4.14	3.62	0.49	NA	NA	8.75	8.23	010
27257		A	Treat hip dislocation	5.22	NA	NA	4.51	4.64	0.56	NA	NA	10.29	10.42	010
27258		A	Treat hip dislocation	15.43	NA	NA	12.99	13.47	2.06	NA	NA	30.48	30.96	090
27259		A	Treat hip dislocation	21.55	NA	NA	16.92	17.36	2.99	NA	NA	41.46	41.90	090
27265		A	Treat hip dislocation	5.05	NA	NA	5.62	5.15	0.65	NA	NA	11.32	10.85	090
27266		A	Treat hip dislocation	7.49	NA	NA	7.04	6.49	1.04	NA	NA	15.57	15.02	090
27275		A	Manipulation of hip joint	2.27	NA	NA	3.30	2.99	0.31	NA	NA	5.88	5.57	010
27280		A	Fusion of sacroiliac joint	13.39	NA	NA	13.47	12.83	1.98	NA	NA	28.84	28.20	090
27282		A	Fusion of pubic bones	11.34	NA	NA	12.18	11.58	1.14	NA	NA	24.66	24.06	090
27284		A	Fusion of hip joint	16.76	NA	NA	14.51	14.82	2.36	NA	NA	33.63	33.94	090
27286		A	Fusion of hip joint	16.79	NA	NA	14.53	15.02	2.37	NA	NA	33.69	34.18	090
27290		A	Amputation of leg at hip	23.28	NA	NA	16.73	19.44	2.94	NA	NA	42.95	45.66	090
27295		A	Amputation of leg at hip	18.65	NA	NA	13.87	14.89	2.35	NA	NA	34.87	35.89	090
27299		C	Pelvis/hip joint surgery	0.00	0.00	0.00	0.00	0.00	0.00	0.00	0.00	0.00	0.00	YYY
27301		A	Drain thigh/knee lesion	6.49	15.18	12.05	13.65	10.91	0.80	22.47	19.34	20.94	18.20	090
27303		A	Drainage of bone lesion	8.28	NA	NA	13.62	11.81	1.14	NA	NA	23.04	21.23	090
27305		A	Incise thigh tendon & fascia	5.92	NA	NA	8.75	7.59	0.77	NA	NA	15.44	14.28	090
27306		A	Incision of thigh tendon	4.62	NA	NA	7.02	5.81	0.62	NA	NA	12.26	11.05	090
27307		A	Incision of thigh tendons	5.80	NA	NA	7.66	6.56	0.78	NA	NA	14.24	13.14	090
27310		A	Exploration of knee joint	9.27	NA	NA	9.47	9.71	1.29	NA	NA	20.03	20.27	090
27315		A	Partial removal, thigh nerve	6.97	NA	NA	4.59	4.90	0.79	NA	NA	12.35	12.66	090
27320		A	Partial removal, thigh nerve	6.30	NA	NA	4.32	4.65	0.78	NA	NA	11.40	11.73	090
27323		A	Biopsy, thigh soft tissues	2.28	5.63	4.47	3.29	2.59	0.17	8.08	6.92	5.74	5.04	010
27324		A	Biopsy, thigh soft tissues	4.90	NA	NA	6.48	5.57	0.59	NA	NA	11.97	11.06	090
27327		A	Removal of thigh lesion	4.47	8.14	6.73	6.16	5.24	0.50	13.11	11.70	11.13	10.21	090
27328		A	Removal of thigh lesion	5.57	NA	NA	6.74	6.16	0.66	NA	NA	12.97	12.39	090
27329		A	Remove tumor, thigh/knee	14.14	NA	NA	13.75	13.49	1.68	NA	NA	29.57	29.31	090
27330		A	Biopsy, knee joint lining	4.97	NA	NA	5.94	5.94	0.66	NA	NA	11.57	11.57	090
27331		A	Explore/treat knee joint	5.88	NA	NA	7.00	7.01	0.81	NA	NA	13.69	13.70	090
27332		A	Removal of knee cartilage	8.27	NA	NA	8.35	8.73	1.15	NA	NA	17.77	18.15	090
27333		A	Removal of knee cartilage	7.30	NA	NA	7.89	8.10	1.03	NA	NA	16.22	16.43	090
27334		A	Remove knee joint lining	8.70	NA	NA	9.15	9.46	1.21	NA	NA	19.06	19.37	090
27335		A	Remove knee joint lining	10.00	NA	NA	9.91	10.42	1.41	NA	NA	21.32	21.83	090

[1] CPT codes and descriptions only are copyright 2000 American Medical Association. All Rights Reserved. Applicable FARS/DFARS Apply.
[2] Copyright 1994 American Dental Association. All rights reserved.
[3] + Indicates RVUs are not used for Medicare payment.
[4] PE RVUs = Practice Expense Relative Value Units.

ADDENDUM B.—RELATIVE VALUE UNITS (RVU'S) AND RELATED INFORMATION—Continued

CPT[1]/ HCPCS[2]	MOD	Status	Description	Physician Work RVUs[3]	Fully Implemented Non-Facility PE RVUs	Year 2001 Transitional Non-Facility PE RVUs	Fully Implemented Facility PE RVUs	Year 2001 Transitional Facility PE RVUs	Mal-Practice RVUs	Fully Implemented Non-Facility Total	Year 2001 Transitional Non-Facility Total	Fully Implemented Facility Total	Year 2001 Transitional Facility Total	Global
27340		A	Removal of kneecap bursa	4.18	NA	NA	5.58	5.23	0.58	NA	NA	10.34	9.99	090
27345		A	Removal of knee cyst	5.92	NA	NA	6.91	6.71	0.81	NA	NA	13.64	13.44	090
27347		A	Remove knee cyst	5.78	2.83	2.83	2.83	2.83	0.76	9.37	9.37	9.37	9.37	090
27350		A	Removal of kneecap	8.17	NA	NA	8.35	8.70	1.15	NA	NA	17.67	18.02	090
27355		A	Remove femur lesion	7.65	NA	NA	9.58	9.24	1.07	NA	NA	18.30	17.96	090
27356		A	Remove femur lesion/graft	9.48	NA	NA	10.57	10.15	1.29	NA	NA	21.34	20.92	090
27357		A	Remove femur lesion/graft	10.53	NA	NA	11.14	10.74	1.48	NA	NA	23.15	22.75	090
27358		A	Remove femur lesion/fixation	4.74	NA	NA	2.64	3.22	0.67	NA	NA	8.05	8.63	ZZZ
27360		A	Partial removal, leg bone(s)	10.50	NA	NA	17.03	15.10	1.42	NA	NA	28.95	27.02	090
27365		A	Extensive leg surgery	16.27	NA	NA	13.70	14.06	2.26	NA	NA	32.23	32.59	090
27370		A	Injection for knee x-ray	0.96	11.76	8.98	0.35	0.43	0.06	12.78	10.00	1.37	1.45	000
27372		A	Removal of foreign body	5.07	8.26	7.12	6.11	5.51	0.62	13.95	12.81	11.80	11.20	090
27380		A	Repair of kneecap tendon	7.16	NA	NA	7.84	8.02	1.00	NA	NA	16.00	16.18	090
27381		A	Repair/graft kneecap tendon	10.34	NA	NA	9.61	10.27	1.44	NA	NA	21.39	22.05	090
27385		A	Repair of thigh muscle	7.76	NA	NA	8.19	8.46	1.09	NA	NA	17.04	17.31	090
27386		A	Repair/graft of thigh muscle	10.56	NA	NA	10.30	10.88	1.49	NA	NA	22.35	22.93	090
27390		A	Incision of thigh tendon	5.33	NA	NA	7.14	6.54	0.69	NA	NA	13.16	12.56	090
27391		A	Incision of thigh tendons	7.20	NA	NA	8.32	7.71	0.99	NA	NA	16.51	15.90	090
27392		A	Incision of thigh tendons	9.20	NA	NA	10.27	9.78	1.23	NA	NA	20.70	20.21	090
27393		A	Lengthening of thigh tendon	6.39	NA	NA	7.78	7.37	0.90	NA	NA	15.07	14.66	090
27394		A	Lengthening of thigh tendons	8.50	NA	NA	10.01	9.06	1.17	NA	NA	19.68	18.73	090
27395		A	Lengthening of thigh tendons	11.73	NA	NA	12.74	12.40	1.63	NA	NA	26.10	25.76	090
27396		A	Transplant of thigh tendon	7.86	NA	NA	9.71	9.20	1.11	NA	NA	18.68	18.17	090
27397		A	Transplants of thigh tendons	11.28	NA	NA	11.12	10.75	1.58	NA	NA	23.98	23.61	090
27400		A	Revise thigh muscles/tendons	9.02	NA	NA	10.60	10.09	1.18	NA	NA	20.80	20.29	090
27403		A	Repair of knee cartilage	8.33	NA	NA	8.40	8.69	1.16	NA	NA	17.89	18.18	090
27405		A	Repair of knee ligament	8.65	NA	NA	9.09	9.40	1.21	NA	NA	18.95	19.26	090
27407		A	Repair of knee ligament	10.28	NA	NA	9.84	9.79	1.38	NA	NA	21.50	21.45	090
27409		A	Repair of knee ligaments	12.90	NA	NA	11.26	12.30	1.75	NA	NA	25.91	26.95	090
27418		A	Repair degenerated kneecap	10.85	NA	NA	10.38	11.03	1.51	NA	NA	22.74	23.39	090
27420		A	Revision of unstable kneecap	9.83	NA	NA	9.27	9.89	1.38	NA	NA	20.48	21.10	090
27422		A	Revision of unstable kneecap	9.78	NA	NA	9.28	9.88	1.37	NA	NA	20.43	21.03	090
27424		A	Revision/removal of kneecap	9.81	NA	NA	9.26	9.87	1.38	NA	NA	20.45	21.06	090
27425		A	Lateral retinacular release	5.22	NA	NA	6.73	6.61	0.73	NA	NA	12.68	12.56	090
27427		A	Reconstruction, knee	9.36	NA	NA	8.93	9.49	1.29	NA	NA	19.58	20.14	090
27428		A	Reconstruction, knee	14.00	NA	NA	11.90	12.64	1.95	NA	NA	27.85	28.59	090
27429		A	Reconstruction, knee	15.52	NA	NA	12.90	12.73	2.18	NA	NA	30.60	30.43	090
27430		A	Revision of thigh muscles	9.67	NA	NA	9.28	9.50	1.35	NA	NA	20.30	20.52	090
27435		A	Incision of knee joint	9.49	NA	NA	9.18	8.79	1.33	NA	NA	20.00	19.61	090
27437		A	Revise kneecap	8.46	NA	NA	9.35	9.54	1.18	NA	NA	18.99	19.18	090
27438		A	Revise kneecap with implant	11.23	NA	NA	10.53	11.25	1.56	NA	NA	23.32	24.04	090
27440		A	Revision of knee joint	10.43	NA	NA	10.16	10.73	1.42	NA	NA	22.01	22.58	090
27441		A	Revision of knee joint	10.82	NA	NA	10.62	10.45	1.49	NA	NA	22.93	22.76	090
27442		A	Revision of knee joint	11.89	NA	NA	11.14	11.91	1.68	NA	NA	24.71	25.48	090
27443		A	Revision of knee joint	10.93	NA	NA	10.79	11.35	1.52	NA	NA	23.24	23.80	090
27445		A	Revision of knee joint	17.68	NA	NA	14.40	16.08	2.49	NA	NA	34.57	36.25	090
27446		A	Revision of knee joint	15.84	NA	NA	13.47	14.83	2.22	NA	NA	31.53	32.89	090
27447		A	Total knee replacement	21.48	NA	NA	16.49	18.78	3.00	NA	NA	40.97	43.26	090
27448		A	Incision of thigh	11.06	NA	NA	11.43	11.88	1.51	NA	NA	24.00	24.45	090
27450		A	Incision of thigh	13.98	NA	NA	13.08	13.84	1.96	NA	NA	29.02	29.78	090
27454		A	Realignment of thigh bone	17.56	NA	NA	15.09	15.58	2.46	NA	NA	35.11	35.60	090
27455		A	Realignment of knee	12.82	NA	NA	11.85	12.15	1.78	NA	NA	26.45	26.75	090
27457		A	Realignment of knee	13.45	NA	NA	11.12	11.95	1.88	NA	NA	26.45	27.28	090
27465		A	Shortening of thigh bone	13.87	NA	NA	13.46	13.42	1.86	NA	NA	29.19	29.15	090
27466		A	Lengthening of thigh bone	16.33	NA	NA	14.73	14.69	1.92	NA	NA	32.98	32.94	090
27468		A	Shorten/lengthen thighs	18.97	NA	NA	16.62	17.04	2.68	NA	NA	38.27	38.69	090
27470		A	Repair of thigh	16.07	NA	NA	15.06	15.82	2.24	NA	NA	33.37	34.13	090
27472		A	Repair/graft of thigh	17.72	NA	NA	15.99	17.28	2.49	NA	NA	36.20	37.49	090
27475		A	Surgery to stop leg growth	8.64	NA	NA	9.08	8.91	1.13	NA	NA	18.85	18.68	090
27477		A	Surgery to stop leg growth	9.85	NA	NA	9.19	9.83	1.31	NA	NA	20.35	20.99	090
27479		A	Surgery to stop leg growth	12.80	NA	NA	10.25	10.84	1.81	NA	NA	24.86	25.45	090
27485		A	Surgery to stop leg growth	8.84	NA	NA	8.73	8.69	1.24	NA	NA	18.81	18.77	090
27486		A	Revise/replace knee joint	19.27	NA	NA	15.36	17.27	2.70	NA	NA	37.33	39.24	090
27487		A	Revise/replace knee joint	25.27	NA	NA	18.66	21.53	3.54	NA	NA	47.47	50.34	090
27488		A	Removal of knee prosthesis	15.74	NA	NA	13.48	14.50	2.21	NA	NA	31.43	32.45	090
27495		A	Reinforce thigh	15.55	NA	NA	14.84	15.77	2.18	NA	NA	32.57	33.50	090
27496		A	Decompression of thigh/knee	6.11	NA	NA	7.19	6.62	0.77	NA	NA	14.07	13.50	090
27497		A	Decompression of thigh/knee	7.17	NA	NA	7.29	6.97	0.84	NA	NA	15.30	14.98	090
27498		A	Decompression of thigh/knee	7.99	NA	NA	9.17	8.59	0.97	NA	NA	18.13	17.55	090
27499		A	Decompression of thigh/knee	9.00	NA	NA	9.05	8.76	1.18	NA	NA	19.23	18.94	090
27500		A	Treatment of thigh fracture	5.92	9.04	8.25	7.02	6.73	0.80	15.76	14.97	13.74	13.45	090
27501		A	Treatment of thigh fracture	5.92	10.04	9.00	7.97	7.45	0.83	16.79	15.75	14.72	14.20	090
27502		A	Treatment of thigh fracture	10.58	NA	NA	10.58	10.02	1.49	NA	NA	22.65	22.09	090
27503		A	Treatment of thigh fracture	10.58	NA	NA	10.57	10.01	1.49	NA	NA	22.64	22.08	090
27506		A	Treatment of thigh fracture	17.45	NA	NA	13.47	14.45	2.33	NA	NA	33.25	34.23	090
27507		A	Treatment of thigh fracture	13.99	NA	NA	11.88	13.09	1.95	NA	NA	27.82	29.03	090
27508		A	Treatment of thigh fracture	5.83	7.00	6.40	5.30	5.12	0.80	13.63	13.03	11.93	11.75	090
27509		A	Treatment of thigh fracture	7.71	NA	NA	8.59	7.59	1.08	NA	NA	17.38	16.38	090
27510		A	Treatment of thigh fracture	9.13	NA	NA	7.16	7.22	1.26	NA	NA	17.55	17.61	090
27511		A	Treatment of thigh fracture	13.64	NA	NA	12.39	13.36	1.91	NA	NA	27.94	28.91	090
27513		A	Treatment of thigh fracture	17.92	NA	NA	14.77	15.43	2.51	NA	NA	35.20	35.86	090
27514		A	Treatment of thigh fracture	17.30	NA	NA	14.24	14.96	2.41	NA	NA	33.95	34.67	090
27516		A	Treat thigh fx growth plate	5.37	7.49	6.93	5.77	5.64	0.74	13.60	13.04	11.88	11.75	090

[1] CPT codes and descriptions only are copyright 2000 American Medical Association. All Rights Reserved. Applicable FARS/DFARS Apply.
[2] Copyright 1994 American Dental Association. All rights reserved.
[3] + Indicates RVUs are not used for Medicare payment.
[4] PE RVUs = Practice Expense Relative Value Units.

ADDENDUM B.—RELATIVE VALUE UNITS (RVU'S) AND RELATED INFORMATION—Continued

CPT[1]/ HCPCS[2]	MOD	Status	Description	Physician Work RVUs[3]	Fully Implemented Non-Facility PE RVUs	Year 2001 Transitional Non-Facility PE RVUs	Fully Implemented Facility PE RVUs	Year 2001 Transitional Facility PE RVUs	Mal-Practice RVUs	Fully Implemented Non-Facility Total	Year 2001 Transitional Non-Facility Total	Fully Implemented Facility Total	Year 2001 Transitional Facility Total	Global
27517		A	Treat thigh fx growth plate	8.78	9.64	9.35	7.70	7.90	1.22	19.64	19.35	17.70	17.90	090
27519		A	Treat thigh fx growth plate	15.02	NA	NA	12.63	12.91	2.09	NA	NA	29.74	30.02	090
27520		A	Treat kneecap fracture	2.86	5.35	4.84	3.71	3.20	0.38	8.59	8.08	6.95	6.44	090
27524		A	Treat kneecap fracture	10.00	NA	NA	8.44	9.14	1.40	NA	NA	19.84	20.54	090
27530		A	Treat knee fracture	3.78	5.86	5.32	4.22	4.09	0.51	10.15	9.61	8.51	8.38	090
27532		A	Treat knee fracture	7.30	7.46	7.14	5.67	5.79	1.02	15.78	15.46	13.99	14.11	090
27535		A	Treat knee fracture	11.50	NA	NA	11.25	11.61	1.61	NA	NA	24.36	24.72	090
27536		A	Treat knee fracture	15.65	NA	NA	11.55	11.84	2.19	NA	NA	29.39	29.68	090
27538		A	Treat knee fracture(s)	4.87	7.41	6.47	5.38	4.95	0.67	12.95	12.01	10.92	10.49	090
27540		A	Treat knee fracture	13.10	NA	NA	9.97	10.45	1.80	NA	NA	24.87	25.35	090
27550		A	Treat knee dislocation	5.76	7.36	6.22	5.63	4.92	0.68	13.80	12.66	12.07	11.36	090
27552		A	Treat knee dislocation	7.90	NA	NA	7.54	6.59	1.10	NA	NA	16.54	15.59	090
27556		A	Treat knee dislocation	14.41	NA	NA	13.65	13.62	2.01	NA	NA	30.07	30.04	090
27557		A	Treat knee dislocation	16.77	NA	NA	14.85	15.10	2.37	NA	NA	33.99	34.24	090
27558		A	Treat knee dislocation	17.72	NA	NA	15.08	15.27	2.51	NA	NA	35.31	35.50	090
27560		A	Treat kneecap dislocation	3.82	5.86	4.78	3.93	3.34	0.40	10.08	9.00	8.15	7.56	090
27562		A	Treat kneecap dislocation	5.79	NA	NA	5.36	5.43	0.69	NA	NA	11.84	11.91	090
27566		A	Treat kneecap dislocation	12.23	NA	NA	9.80	10.22	1.73	NA	NA	23.76	24.18	090
27570		A	Fixation of knee joint	1.74	NA	NA	2.98	2.70	0.24	NA	NA	4.96	4.68	010
27580		A	Fusion of knee	19.37	NA	NA	15.72	16.05	2.70	NA	NA	37.79	38.12	090
27590		A	Amputate leg at thigh	12.03	NA	NA	12.53	11.87	1.35	NA	NA	25.91	25.25	090
27591		A	Amputate leg at thigh	12.68	NA	NA	13.48	13.30	1.63	NA	NA	27.79	27.61	090
27592		A	Amputate leg at thigh	10.02	NA	NA	11.99	11.19	1.17	NA	NA	23.18	22.38	090
27594		A	Amputation follow-up surgery	6.92	NA	NA	8.93	7.69	0.82	NA	NA	16.67	15.43	090
27596		A	Amputation follow-up surgery	10.60	NA	NA	12.23	11.17	1.24	NA	NA	24.07	23.01	090
27598		A	Amputate lower leg at knee	10.53	NA	NA	11.03	11.00	1.24	NA	NA	22.80	22.77	090
27599		C	Leg surgery procedure	0.00	0.00	0.00	0.00	0.00	0.00	0.00	0.00	0.00	0.00	YYY
27600		A	Decompression of lower leg	5.65	NA	NA	8.30	7.15	0.68	NA	NA	14.63	13.48	090
27601		A	Decompression of lower leg	5.64	NA	NA	7.26	6.36	0.69	NA	NA	13.59	12.69	090
27602		A	Decompression of lower leg	7.35	NA	NA	8.37	7.38	0.85	NA	NA	16.57	15.58	090
27603		A	Drain lower leg lesion	4.94	15.25	12.08	10.14	8.25	0.56	20.75	17.58	15.64	13.75	090
27604		A	Drain lower leg bursa	4.47	10.40	8.08	7.72	5.93	0.54	15.41	13.09	12.73	10.94	090
27605		A	Incision of achilles tendon	2.87	9.66	7.57	3.62	3.04	0.38	12.91	10.82	6.87	6.29	010
27606		A	Incision of achilles tendon	4.14	11.59	9.27	4.73	4.12	0.57	16.30	13.98	9.44	8.83	010
27607		A	Treat lower leg bone lesion	7.97	NA	NA	12.76	11.20	1.08	NA	NA	21.81	20.25	090
27610		A	Explore/treat ankle joint	8.34	NA	NA	9.82	9.38	1.15	NA	NA	19.31	18.87	090
27612		A	Exploration of ankle joint	7.33	NA	NA	7.55	7.83	1.01	NA	NA	15.89	16.17	090
27613		A	Biopsy lower leg soft tissue	2.17	5.55	4.35	3.04	2.37	0.16	7.88	6.68	5.37	4.70	010
27614		A	Biopsy lower leg soft tissue	5.66	11.19	9.01	6.79	5.71	0.62	17.47	15.29	13.07	11.99	090
27615		A	Remove tumor, lower leg	12.56	NA	NA	16.21	14.39	1.39	NA	NA	30.16	28.34	090
27618		A	Remove lower leg lesion	5.09	10.82	8.69	6.35	5.33	0.54	16.45	14.32	11.98	10.96	090
27619		A	Remove lower leg lesion	8.40	13.17	11.00	8.85	7.76	1.01	22.58	20.41	18.26	17.17	090
27620		A	Explore/treat ankle joint	5.98	NA	NA	7.30	7.11	0.83	NA	NA	14.11	13.92	090
27625		A	Remove ankle joint lining	8.30	NA	NA	9.11	9.20	1.16	NA	NA	18.57	18.66	090
27626		A	Remove ankle joint lining	8.91	NA	NA	9.78	10.00	1.23	NA	NA	19.92	20.14	090
27630		A	Removal of tendon lesion	4.80	11.16	9.21	6.56	5.76	0.60	16.56	14.61	11.96	11.16	090
27635		A	Remove lower leg bone lesion	7.78	NA	NA	10.30	9.91	1.06	NA	NA	19.14	18.75	090
27637		A	Remove/graft leg bone lesion	9.85	NA	NA	11.57	10.98	1.38	NA	NA	22.80	22.21	090
27638		A	Remove/graft leg bone lesion	10.57	NA	NA	12.06	11.53	1.47	NA	NA	24.10	23.57	090
27640		A	Partial removal of tibia	11.37	NA	NA	16.89	15.33	1.54	NA	NA	29.80	28.24	090
27641		A	Partial removal of fibula	9.24	NA	NA	14.87	13.09	1.22	NA	NA	25.33	23.55	090
27645		A	Extensive lower leg surgery	14.17	NA	NA	16.86	15.80	1.98	NA	NA	33.01	31.95	090
27646		A	Extensive lower leg surgery	12.66	NA	NA	15.44	14.50	1.55	NA	NA	29.65	28.71	090
27647		A	Extensive ankle/heel surgery	12.24	NA	NA	10.73	10.75	1.64	NA	NA	24.61	24.63	090
27648		A	Injection for ankle x-ray	0.96	8.98	6.88	0.35	0.40	0.05	9.99	7.89	1.36	1.41	000
27650		A	Repair achilles tendon	9.69	NA	NA	8.93	9.14	1.35	NA	NA	19.97	20.18	090
27652		A	Repair/graft achilles tendon	10.33	NA	NA	9.27	9.78	1.45	NA	NA	21.05	21.56	090
27654		A	Repair of achilles tendon	10.02	NA	NA	9.55	10.13	1.41	NA	NA	20.98	21.56	090
27656		A	Repair leg fascia defect	4.57	12.31	10.10	6.00	5.36	0.48	17.36	15.15	11.05	10.41	090
27658		A	Repair of leg tendon, each	4.98	14.14	11.70	8.23	7.26	0.68	19.80	17.36	13.89	12.92	090
27659		A	Repair of leg tendon, each	6.81	16.73	14.14	9.20	8.49	0.96	24.50	21.91	16.97	16.26	090
27664		A	Repair of leg tendon, each	4.59	11.88	9.84	8.14	7.03	0.63	17.10	15.06	13.36	12.25	090
27665		A	Repair of leg tendon, each	5.40	13.35	11.36	8.23	7.52	0.75	19.50	17.51	14.38	13.67	090
27675		A	Repair lower leg tendons	7.18	NA	NA	7.43	7.31	1.01	NA	NA	15.62	15.50	090
27676		A	Repair lower leg tendons	8.42	NA	NA	8.72	8.59	1.15	NA	NA	18.29	18.16	090
27680		A	Release of lower leg tendon	5.74	NA	NA	7.46	6.71	0.80	NA	NA	14.00	13.25	090
27681		A	Release of lower leg tendons	6.82	NA	NA	7.49	7.24	0.92	NA	NA	15.23	14.98	090
27685		A	Revision of lower leg tendon	6.50	10.15	8.65	7.65	6.78	0.91	17.56	16.06	15.06	14.19	090
27686		A	Revise lower leg tendons	7.46	16.51	14.16	9.24	8.71	1.05	25.02	22.67	17.75	17.22	090
27687		A	Revision of calf tendon	6.24	NA	NA	7.74	7.28	0.88	NA	NA	14.86	14.40	090
27690		A	Revise lower leg tendon	8.71	NA	NA	8.69	8.35	1.22	NA	NA	18.62	18.28	090
27691		A	Revise lower leg tendon	9.96	NA	NA	10.27	9.84	1.40	NA	NA	21.63	21.20	090
27692		A	Revise additional leg tendon	1.87	NA	NA	0.98	1.29	0.26	NA	NA	3.11	3.42	ZZZ
27695		A	Repair of ankle ligament	6.51	NA	NA	8.47	8.30	0.90	NA	NA	15.88	15.71	090
27696		A	Repair of ankle ligaments	8.27	NA	NA	8.94	8.62	1.16	NA	NA	18.37	18.05	090
27698		A	Repair of ankle ligament	9.36	NA	NA	8.65	9.28	1.31	NA	NA	19.32	19.95	090
27700		A	Revision of ankle joint	9.29	NA	NA	7.33	8.27	1.24	NA	NA	17.86	18.80	090
27702		A	Reconstruct ankle joint	13.67	NA	NA	12.29	13.30	1.92	NA	NA	27.88	28.89	090
27703		A	Reconstruction, ankle joint	15.87	NA	NA	13.62	13.97	2.24	NA	NA	31.73	32.08	090
27704		A	Removal of ankle implant	7.62	NA	NA	7.29	7.05	0.61	NA	NA	15.52	15.28	090
27705		A	Incision of tibia	10.38	NA	NA	10.87	11.07	1.44	NA	NA	22.69	22.89	090
27707		A	Incision of fibula	4.37	NA	NA	7.71	7.07	0.60	NA	NA	12.68	12.04	090
27709		A	Incision of tibia & fibula	9.95	NA	NA	10.78	11.06	1.39	NA	NA	22.12	22.40	090

[1] CPT codes and descriptions only are copyright 2000 American Medical Association. All Rights Reserved. Applicable FARS/DFARS Apply.
[2] Copyright 1994 American Dental Association. All rights reserved.
[3] + Indicates RVUs are not used for Medicare payment.
[4] PE RVUs = Practice Expense Relative Value Units.

ADDENDUM B.—RELATIVE VALUE UNITS (RVU'S) AND RELATED INFORMATION—Continued

CPT[1]/ HCPCS[2]	MOD	Status	Description	Physician Work RVUs[3]	Fully Implemented Non-Facility PE RVUs	Year 2001 Transitional Non-Facility PE RVUs	Fully Implemented Facility PE RVUs	Year 2001 Transitional Facility PE RVUs	Mal-Practice RVUs	Fully Implemented Non-Facility Total	Year 2001 Transitional Non-Facility Total	Fully Implemented Facility Total	Year 2001 Transitional Facility Total	Global
27712		A	Realignment of lower leg	14.25	NA	NA	12.92	12.67	2.00	NA	NA	29.17	28.92	090
27715		A	Revision of lower leg	14.39	NA	NA	14.13	14.02	2.00	NA	NA	30.52	30.41	090
27720		A	Repair of tibia	11.79	NA	NA	12.73	13.07	1.66	NA	NA	26.18	26.52	090
27722		A	Repair/graft of tibia	11.82	NA	NA	12.32	12.09	1.65	NA	NA	25.79	25.56	090
27724		A	Repair/graft of tibia	14.99	NA	NA	14.51	15.09	2.10	NA	NA	31.60	32.18	090
27725		A	Repair of lower leg	15.59	NA	NA	14.91	14.01	2.20	NA	NA	32.70	31.80	090
27727		A	Repair of lower leg	14.01	NA	NA	12.43	11.87	1.84	NA	NA	28.28	27.72	090
27730		A	Repair of tibia epiphysis	7.41	14.49	11.84	9.62	8.19	0.75	22.65	20.00	17.78	16.35	090
27732		A	Repair of fibula epiphysis	5.32	11.89	10.23	8.26	7.51	0.63	17.84	16.18	14.21	13.46	090
27734		A	Repair lower leg epiphyses	8.48	NA	NA	9.04	8.83	0.85	NA	NA	18.37	18.16	090
27740		A	Repair of leg epiphyses	9.30	15.25	13.71	10.51	10.15	1.31	25.86	24.32	21.12	20.76	090
27742		A	Repair of leg epiphyses	10.30	15.64	14.25	11.09	10.84	1.55	27.49	26.10	22.94	22.69	090
27745		A	Reinforce tibia	10.07	NA	NA	10.84	10.56	1.38	NA	NA	22.29	22.01	090
27750		A	Treatment of tibia fracture	3.19	5.51	5.07	3.89	3.85	0.43	9.13	8.69	7.51	7.47	090
27752		A	Treatment of tibia fracture	5.84	7.97	7.36	5.99	5.87	0.82	14.63	14.02	12.65	12.53	090
27756		A	Treatment of tibia fracture	6.78	NA	NA	9.99	9.52	0.94	NA	NA	17.71	17.24	090
27758		A	Treatment of tibia fracture	11.67	NA	NA	11.09	11.80	1.52	NA	NA	24.28	24.99	090
27759		A	Treatment of tibia fracture	13.76	NA	NA	12.66	13.22	1.93	NA	NA	28.35	28.91	090
27760		A	Treatment of ankle fracture	3.01	5.29	4.67	3.76	3.17	0.39	8.69	8.07	7.16	6.57	090
27762		A	Treatment of ankle fracture	5.25	7.52	6.55	5.57	5.09	0.71	13.48	12.51	11.53	11.05	090
27766		A	Treatment of ankle fracture	8.36	NA	NA	8.05	8.17	1.17	NA	NA	17.58	17.70	090
27780		A	Treatment of fibula fracture	2.65	5.23	4.46	3.56	2.94	0.33	8.21	7.44	6.54	5.92	090
27781		A	Treatment of fibula fracture	4.40	6.42	5.71	4.48	4.25	0.57	11.39	10.68	9.45	9.22	090
27784		A	Treatment of fibula fracture	7.11	NA	NA	7.99	7.51	0.98	NA	NA	16.08	15.60	090
27786		A	Treatment of ankle fracture	2.84	5.26	4.63	3.68	3.10	0.37	8.47	7.84	6.89	6.31	090
27788		A	Treatment of ankle fracture	4.45	6.42	5.70	4.52	3.84	0.61	11.48	10.76	9.58	8.90	090
27792		A	Treatment of ankle fracture	7.66	NA	NA	7.63	7.73	1.07	NA	NA	16.36	16.46	090
27808		A	Treatment of ankle fracture	2.83	6.23	5.43	4.35	4.02	0.38	9.44	8.64	7.56	7.23	090
27810		A	Treatment of ankle fracture	5.13	7.49	6.99	5.55	5.53	0.71	13.33	12.83	11.39	11.37	090
27814		A	Treatment of ankle fracture	10.68	NA	NA	10.24	10.39	1.50	NA	NA	22.42	22.57	090
27816		A	Treatment of ankle fracture	2.89	5.84	5.32	4.38	4.15	0.37	9.10	8.58	7.64	7.41	090
27818		A	Treatment of ankle fracture	5.50	7.69	7.41	5.72	5.93	0.74	13.93	13.65	11.96	12.17	090
27822		A	Treatment of ankle fracture	9.20	NA	NA	11.23	11.17	1.29	NA	NA	21.72	21.66	090
27823		A	Treatment of ankle fracture	11.80	NA	NA	12.62	12.94	1.65	NA	NA	26.07	26.39	090
27824		A	Treat lower leg fracture	2.89	6.25	5.63	4.35	4.13	0.39	9.53	8.91	7.63	7.41	090
27825		A	Treat lower leg fracture	6.19	8.07	7.82	6.16	6.39	0.85	15.11	14.86	13.20	13.43	090
27826		A	Treat lower leg fracture	8.54	NA	NA	10.87	10.70	1.19	NA	NA	20.60	20.43	090
27827		A	Treat lower leg fracture	14.06	NA	NA	13.95	13.64	1.96	NA	NA	29.97	29.66	090
27828		A	Treat lower leg fracture	16.23	NA	NA	15.10	14.80	2.27	NA	NA	33.60	33.30	090
27829		A	Treat lower leg joint	5.49	NA	NA	7.87	7.54	0.77	NA	NA	14.13	13.80	090
27830		A	Treat lower leg dislocation	3.79	4.80	4.48	4.25	4.07	0.44	9.03	8.71	8.48	8.30	090
27831		A	Treat lower leg dislocation	4.56	NA	NA	4.96	4.80	0.61	NA	NA	10.13	9.97	090
27832		A	Treat lower leg dislocation	6.49	NA	NA	7.75	7.36	0.91	NA	NA	15.15	14.76	090
27840		A	Treat ankle dislocation	4.58	NA	NA	5.55	4.67	0.47	NA	NA	10.60	9.72	090
27842		A	Treat ankle dislocation	6.21	NA	NA	4.89	4.27	0.76	NA	NA	11.86	11.24	090
27846		A	Treat ankle dislocation	9.79	NA	NA	9.76	9.65	1.36	NA	NA	20.91	20.80	090
27848		A	Treat ankle dislocation	11.20	NA	NA	10.89	10.44	1.55	NA	NA	23.64	23.19	090
27860		A	Fixation of ankle joint	2.34	NA	NA	3.48	2.99	0.31	NA	NA	6.13	5.64	010
27870		A	Fusion of ankle joint	13.91	NA	NA	12.91	13.30	1.95	NA	NA	28.77	29.16	090
27871		A	Fusion of tibiofibular joint	9.17	NA	NA	10.24	9.79	1.29	NA	NA	20.70	20.25	090
27880		A	Amputation of lower leg	11.85	NA	NA	11.75	11.08	1.38	NA	NA	24.98	24.31	090
27881		A	Amputation of lower leg	12.34	NA	NA	12.81	12.54	1.59	NA	NA	26.74	26.47	090
27882		A	Amputation of lower leg	8.94	NA	NA	12.92	11.69	1.03	NA	NA	22.89	21.66	090
27884		A	Amputation follow-up surgery	8.21	NA	NA	10.37	8.69	0.95	NA	NA	19.53	17.85	090
27886		A	Amputation follow-up surgery	9.32	NA	NA	10.99	10.19	1.13	NA	NA	21.44	20.64	090
27888		A	Amputation of foot at ankle	9.67	NA	NA	10.32	10.32	1.26	NA	NA	21.25	21.25	090
27889		A	Amputation of foot at ankle	9.98	NA	NA	10.65	10.28	1.19	NA	NA	21.82	21.45	090
27892		A	Decompression of leg	7.39	NA	NA	8.08	6.98	0.86	NA	NA	16.33	15.23	090
27893		A	Decompression of leg	7.35	NA	NA	8.38	7.20	0.90	NA	NA	16.63	15.45	090
27894		A	Decompression of leg	10.49	NA	NA	9.43	8.17	1.25	NA	NA	21.17	19.91	090
27899		C	Leg/ankle surgery procedure	0.00	0.00	0.00	0.00	0.00	0.00	0.00	0.00	0.00	0.00	YYY
28001		A	Drainage of bursa of foot	2.73	4.58	3.58	2.84	2.20	0.31	7.62	6.62	5.88	5.24	010
28002		A	Treatment of foot infection	4.62	6.18	5.25	4.09	3.68	0.56	11.36	10.43	9.27	8.86	010
28003		A	Treatment of foot infection	8.41	9.97	8.43	9.86	7.87	1.03	19.41	17.87	19.30	17.31	090
28005		A	Treat foot bone lesion	8.68	NA	NA	9.49	8.23	1.14	NA	NA	19.31	18.05	090
28008		A	Incision of foot fascia	4.45	6.80	5.83	5.72	5.02	0.56	11.81	10.84	10.73	10.03	090
28010		A	Incision of toe tendon	2.84	6.20	5.63	4.50	3.87	0.39	9.43	8.86	7.73	7.10	090
28011		A	Incision of toe tendons	4.14	8.18	6.62	6.03	4.76	0.58	12.90	11.34	10.75	9.48	090
28020		A	Exploration of foot joint	5.01	8.29	7.41	5.73	5.49	0.64	13.94	13.06	11.38	11.14	090
28022		A	Exploration of foot joint	4.67	7.49	6.36	5.57	4.55	0.62	12.78	11.65	10.86	9.84	090
28024		A	Exploration of toe joint	4.38	7.22	6.06	5.87	4.73	0.50	12.10	10.94	10.75	9.61	090
28030		A	Removal of foot nerve	6.15	NA	NA	3.42	3.63	0.85	NA	NA	10.42	10.63	090
28035		A	Decompression of tibia nerve	5.09	8.79	8.27	4.93	5.22	0.71	14.59	14.07	10.73	11.02	090
28043		A	Excision of foot lesion	3.54	6.50	5.35	4.60	3.92	0.45	10.49	9.34	8.59	7.91	090
28045		A	Excision of foot lesion	4.72	6.87	6.24	5.17	4.96	0.62	12.21	11.58	10.51	10.30	090
28046		A	Resection of tumor, foot	10.18	11.78	10.29	10.23	9.13	1.13	23.09	21.60	21.54	20.44	090
28050		A	Biopsy of foot joint lining	4.25	5.95	5.51	5.18	4.93	0.55	10.75	10.31	9.98	9.73	090
28052		A	Biopsy of foot joint lining	3.94	7.42	6.60	5.25	4.46	0.51	11.87	11.05	9.70	8.91	090
28054		A	Biopsy of toe joint lining	3.45	7.01	5.87	4.99	4.35	0.45	10.91	9.77	8.89	8.25	090
28060		A	Partial removal, foot fascia	5.23	7.61	6.85	5.82	5.51	0.69	13.53	12.77	11.74	11.43	090
28062		A	Removal of foot fascia	6.52	8.52	8.31	5.86	6.31	0.85	15.89	15.68	13.23	13.68	090
28070		A	Removal of foot joint lining	5.10	7.75	7.03	5.38	5.25	0.68	13.53	12.81	11.16	11.03	090
28072		A	Removal of foot joint lining	4.58	7.27	6.32	6.08	5.43	0.64	12.49	11.54	11.30	10.65	090

[1] CPT codes and descriptions only are copyright 2000 American Medical Association. All Rights Reserved. Applicable FARS/DFARS Apply.
[2] Copyright 1994 American Dental Association. All rights reserved.
[3] + Indicates RVUs are not used for Medicare payment.
[4] PE RVUs = Practice Expense Relative Value Units.

ADDENDUM B.—RELATIVE VALUE UNITS (RVU'S) AND RELATED INFORMATION—Continued

CPT[1]/ HCPCS[2]	MOD	Status	Description	Physician Work RVUs[3]	Fully Implemented Non-Facility PE RVUs	Year 2001 Transitional Non-Facility PE RVUs	Fully Implemented Facility PE RVUs	Year 2001 Transitional Facility PE RVUs	Mal-Practice RVUs	Fully Implemented Non-Facility Total	Year 2001 Transitional Non-Facility Total	Fully Implemented Facility Total	Year 2001 Transitional Facility Total	Global
28080		A	Removal of foot lesion	3.58	6.67	6.11	4.81	4.71	0.50	10.75	10.19	8.89	8.79	090
28086		A	Excise foot tendon sheath	4.78	10.76	8.92	6.67	5.85	0.66	16.20	14.36	12.11	11.29	090
28088		A	Excise foot tendon sheath	3.86	7.94	6.94	5.80	5.33	0.52	12.32	11.32	10.18	9.71	090
28090		A	Removal of foot lesion	4.41	6.96	6.04	5.03	4.59	0.57	11.94	11.02	10.01	9.57	090
28092		A	Removal of toe lesions	3.64	7.43	6.12	5.32	4.54	0.46	11.53	10.22	9.42	8.64	090
28100		A	Removal of ankle/heel lesion	5.66	10.71	9.28	6.99	6.49	0.76	17.13	15.70	13.41	12.91	090
28102		A	Remove/graft foot lesion	7.73	NA	NA	7.90	7.78	0.97	NA	NA	16.60	16.48	090
28103		A	Remove/graft foot lesion	6.50	10.68	9.53	6.98	6.76	0.89	18.07	16.92	14.37	14.15	090
28104		A	Removal of foot lesion	5.12	8.02	7.19	6.16	5.80	0.69	13.83	13.00	11.97	11.61	090
28106		A	Remove/graft foot lesion	7.16	NA	NA	5.83	6.12	1.01	NA	NA	14.00	14.29	090
28107		A	Remove/graft foot lesion	5.56	8.54	7.72	6.23	5.99	0.74	14.84	14.02	12.53	12.29	090
28108		A	Removal of toe lesions	4.16	6.25	5.83	4.74	4.13	0.52	10.93	10.51	9.42	8.81	090
28110		A	Part removal of metatarsal	4.08	7.68	6.71	5.99	5.44	0.49	12.25	11.28	10.56	10.01	090
28111		A	Part removal of metatarsal	5.01	10.30	9.09	6.96	6.59	0.63	15.94	14.73	12.60	12.23	090
28112		A	Part removal of metatarsal	4.49	9.00	7.83	6.61	6.03	0.60	14.09	12.92	11.70	11.12	090
28113		A	Part removal of metatarsal	4.79	8.22	7.37	6.35	5.97	0.63	13.64	12.79	11.77	11.39	090
28114		A	Removal of metatarsal heads	9.79	14.40	13.29	9.94	9.94	1.36	25.55	24.44	21.09	21.09	090
28116		A	Revision of foot	7.75	8.00	7.49	6.35	6.25	1.03	16.78	16.27	15.13	15.03	090
28118		A	Removal of heel bone	5.96	9.13	8.40	6.30	6.28	0.79	15.88	15.15	13.05	13.03	090
28119		A	Removal of heel spur	5.39	7.33	6.97	5.38	5.51	0.74	13.46	13.10	11.51	11.64	090
28120		A	Part removal of ankle/heel	5.40	11.67	10.12	8.70	7.89	0.69	17.76	16.21	14.79	13.98	090
28122		A	Partial removal of foot bone	7.29	10.13	8.81	8.40	7.52	0.96	18.38	17.06	16.65	15.77	090
28124		A	Partial removal of toe	4.81	7.79	6.96	6.63	5.53	0.65	13.25	12.42	12.09	10.99	090
28126		A	Partial removal of toe	3.52	6.68	6.09	6.12	5.13	0.49	10.69	10.10	10.13	9.14	090
28130		A	Removal of ankle bone	8.11	NA	NA	7.84	7.79	1.11	NA	NA	17.06	17.01	090
28140		A	Removal of metatarsal	6.91	10.71	9.37	7.47	6.94	0.84	18.46	17.12	15.22	14.69	090
28150		A	Removal of toe	4.09	7.74	6.70	6.32	5.63	0.52	12.35	11.31	10.93	10.24	090
28153		A	Partial removal of toe	3.66	6.76	6.15	5.22	4.46	0.49	10.91	10.30	9.37	8.61	090
28160		A	Partial removal of toe	3.74	7.24	6.55	6.29	5.28	0.51	11.49	10.80	10.54	9.53	090
28171		A	Extensive foot surgery	9.60	NA	NA	8.55	8.58	1.13	NA	NA	19.28	19.31	090
28173		A	Extensive foot surgery	8.80	10.93	9.76	7.93	7.51	1.04	20.77	19.60	17.77	17.35	090
28175		A	Extensive foot surgery	6.05	7.97	7.44	6.18	6.10	0.75	14.77	14.24	12.98	12.90	090
28190		A	Removal of foot foreign body	1.96	5.37	4.17	3.13	2.42	0.16	7.49	6.29	5.25	4.54	010
28192		A	Removal of foot foreign body	4.64	6.87	5.68	5.06	4.33	0.52	12.03	10.84	10.22	9.49	090
28193		A	Removal of foot foreign body	5.73	7.25	6.08	5.87	5.05	0.63	13.61	12.44	12.23	11.41	090
28200		A	Repair of foot tendon	4.60	7.40	6.92	5.45	5.46	0.59	12.59	12.11	10.64	10.65	090
28202		A	Repair/graft of foot tendon	6.84	10.71	9.61	6.34	6.34	0.86	18.41	17.31	14.04	14.04	090
28208		A	Repair of foot tendon	4.37	7.15	6.13	5.54	4.92	0.59	12.11	11.09	10.50	9.88	090
28210		A	Repair/graft of foot tendon	6.35	8.45	7.86	5.70	5.80	0.77	15.57	14.98	12.82	12.92	090
28220		A	Release of foot tendon	4.53	6.49	5.92	5.53	4.67	0.63	11.65	11.08	10.69	9.83	090
28222		A	Release of foot tendons	5.62	6.97	6.97	6.48	5.73	0.77	13.36	13.36	12.87	12.12	090
28225		A	Release of foot tendon	3.66	6.37	5.42	5.05	4.43	0.50	10.53	9.58	9.21	8.59	090
28226		A	Release of foot tendons	4.53	6.41	5.73	6.41	5.73	0.62	11.56	10.88	11.56	10.88	090
28230		A	Incision of foot tendon(s)	4.24	6.69	5.68	6.17	4.96	0.59	11.52	10.51	11.00	9.79	090
28232		A	Incision of toe tendon	3.39	6.66	5.43	5.78	4.55	0.48	10.53	9.30	9.65	8.42	090
28234		A	Incision of foot tendon	3.37	6.72	5.46	5.28	4.17	0.46	10.55	9.29	9.11	8.00	090
28238		A	Revision of foot tendon	7.73	10.27	9.67	6.87	7.12	1.08	19.08	18.48	15.68	15.93	090
28240		A	Release of big toe	4.36	6.66	5.57	5.67	4.83	0.61	11.63	10.54	10.64	9.80	090
28250		A	Revision of foot fascia	5.92	8.22	7.38	6.56	6.13	0.81	14.95	14.11	13.29	12.86	090
28260		A	Release of midfoot joint	7.96	7.81	7.06	6.77	6.28	1.08	16.85	16.10	15.81	15.32	090
28261		A	Revision of foot tendon	11.73	9.61	8.81	8.76	8.17	1.66	23.00	22.20	22.15	21.56	090
28262		A	Revision of foot and ankle	15.83	16.96	15.95	14.47	14.09	2.22	35.01	34.00	32.52	32.14	090
28264		A	Release of midfoot joint	10.35	10.97	10.82	10.97	10.82	1.46	22.78	22.63	22.78	22.63	090
28270		A	Release of foot contracture	4.76	7.16	6.08	6.31	5.09	0.67	12.59	11.51	11.74	10.52	090
28272		A	Release of toe joint, each	3.80	6.16	5.17	4.71	3.81	0.52	10.48	9.49	9.03	8.13	090
28280		A	Fusion of toes	5.19	8.67	7.11	6.23	5.28	0.72	14.58	13.02	12.14	11.19	090
28285		A	Repair of hammertoe	4.59	7.36	6.71	5.78	5.52	0.64	12.59	11.94	11.01	10.75	090
28286		A	Repair of hammertoe	4.56	7.03	6.25	5.83	5.35	0.64	12.23	11.45	11.03	10.55	090
28288		A	Partial removal of foot bone	4.74	8.06	7.06	7.21	6.43	0.65	13.45	12.45	12.60	11.82	090
28289		A	Repair hallux rigidus	7.04	9.49	9.49	7.90	7.90	0.96	17.49	17.49	15.90	15.90	090
28290		A	Correction of bunion	5.66	8.97	8.18	7.98	7.44	0.79	15.42	14.63	14.43	13.89	090
28292		A	Correction of bunion	7.04	8.66	8.41	6.78	7.00	0.98	16.68	16.43	14.80	15.02	090
28293		A	Correction of bunion	9.15	9.77	9.92	7.07	7.89	1.28	20.20	20.35	17.50	18.32	090
28294		A	Correction of bunion	8.56	9.11	9.32	7.06	7.78	1.16	18.83	19.04	16.78	17.50	090
28296		A	Correction of bunion	9.18	9.80	9.74	7.71	8.17	1.28	20.26	20.20	18.17	18.63	090
28297		A	Correction of bunion	9.18	12.14	11.55	9.38	9.48	1.31	22.63	22.04	19.87	19.97	090
28298		A	Correction of bunion	7.94	8.69	8.89	7.42	7.93	1.12	17.75	17.95	16.48	16.99	090
28299		A	Correction of bunion	8.88	9.63	9.87	7.56	8.32	1.24	19.75	19.99	17.68	18.44	090
28300		A	Incision of heel bone	9.54	14.49	12.64	8.89	8.44	1.31	25.34	23.49	19.74	19.29	090
28302		A	Incision of ankle bone	9.55	18.57	16.34	8.64	8.89	1.15	29.27	27.04	19.34	19.59	090
28304		A	Incision of midfoot bones	9.16	9.14	8.60	7.05	7.04	1.00	19.30	18.76	17.21	17.20	090
28305		A	Incise/graft midfoot bones	10.50	14.48	13.53	8.86	9.32	0.55	25.53	24.58	19.91	20.37	090
28306		A	Incision of metatarsal	5.86	9.15	8.10	5.74	5.55	0.81	15.82	14.77	12.41	12.22	090
28307		A	Incision of metatarsal	6.33	15.34	13.10	7.61	7.30	0.71	22.38	20.14	14.65	14.34	090
28308		A	Incision of metatarsal	5.29	6.77	6.63	4.85	5.19	0.74	12.80	12.66	10.88	11.22	090
28309		A	Incision of metatarsals	12.78	NA	NA	10.35	9.63	1.64	NA	NA	24.77	24.05	090
28310		A	Revision of big toe	5.43	7.96	7.10	6.04	5.66	0.76	14.15	13.29	12.23	11.85	090
28312		A	Revision of toe	4.55	7.58	6.92	6.65	6.23	0.62	12.75	12.09	11.82	11.40	090
28313		A	Repair deformity of toe	5.01	7.96	6.67	7.96	6.32	0.68	13.65	12.36	13.65	12.01	090
28315		A	Removal of sesamoid bone	4.86	6.62	6.12	4.98	4.89	0.66	12.14	11.64	10.50	10.41	090
28320		A	Repair of foot bones	9.18	NA	NA	8.06	8.40	1.27	NA	NA	18.51	18.85	090
28322		A	Repair of metatarsals	8.34	11.48	9.88	8.14	7.37	1.17	20.99	19.39	17.65	16.88	090
28340		A	Resect enlarged toe tissue	6.98	8.72	8.26	5.63	5.94	0.98	16.68	16.22	13.59	13.90	090

[1] CPT codes and descriptions only are copyright 2000 American Medical Association. All Rights Reserved. Applicable FARS/DFARS Apply.
[2] Copyright 1994 American Dental Association. All rights reserved.
[3] + Indicates RVUs are not used for Medicare payment.
[4] PE RVUs = Practice Expense Relative Value Units.

ADDENDUM B.—RELATIVE VALUE UNITS (RVU'S) AND RELATED INFORMATION—Continued

CPT[1]/ HCPCS[2]	MOD	Status	Description	Physician Work RVUs[3]	Fully Implemented Non-Facility PE RVUs	Year 2001 Transitional Non-Facility PE RVUs	Fully Implemented Facility PE RVUs	Year 2001 Transitional Facility PE RVUs	Mal-Practice RVUs	Fully Implemented Non-Facility Total	Year 2001 Transitional Non-Facility Total	Fully Implemented Facility Total	Year 2001 Transitional Facility Total	Global
28341		A	Resect enlarged toe	8.41	8.00	8.08	6.47	6.93	1.18	17.59	17.67	16.06	16.52	090
28344		A	Repair extra toe(s)	4.26	12.28	10.22	4.98	4.74	0.60	17.14	15.08	9.84	9.60	090
28345		A	Repair webbed toe(s)	5.92	8.69	7.97	6.36	6.22	0.84	15.45	14.73	13.12	12.98	090
28360		A	Reconstruct cleft foot	13.34	NA	NA	12.16	12.35	1.88	NA	NA	27.38	27.57	090
28400		A	Treatment of heel fracture	2.16	5.60	4.90	4.61	3.81	0.29	8.05	7.35	7.06	6.26	090
28405		A	Treatment of heel fracture	4.57	6.56	5.98	5.71	5.34	0.63	11.76	11.18	10.91	10.54	090
28406		A	Treatment of heel fracture	6.31	NA	NA	8.06	7.70	0.87	NA	NA	15.24	14.88	090
28415		A	Treat heel fracture	15.97	NA	NA	14.47	13.30	2.24	NA	NA	32.68	31.51	090
28420		A	Treat/graft heel fracture	16.64	NA	NA	14.54	13.86	2.29	NA	NA	33.47	32.79	090
28430		A	Treatment of ankle fracture	2.09	5.19	4.56	4.13	3.43	0.27	7.55	6.92	6.49	5.79	090
28435		A	Treatment of ankle fracture	3.40	5.78	5.25	4.59	4.36	0.47	9.65	9.12	8.46	8.23	090
28436		A	Treatment of ankle fracture	4.71	NA	NA	7.29	6.61	0.66	NA	NA	12.66	11.98	090
28445		A	Treat ankle fracture	9.33	NA	NA	9.62	9.60	1.29	NA	NA	20.24	20.22	090
28450		A	Treat midfoot fracture, each	1.90	5.06	4.30	3.98	3.24	0.25	7.21	6.45	6.13	5.39	090
28455		A	Treat midfoot fracture, each	3.09	5.52	4.83	4.86	3.99	0.43	9.04	8.35	8.38	7.51	090
28456		A	Treat midfoot fracture	2.68	NA	NA	5.60	4.82	0.36	NA	NA	8.64	7.86	090
28465		A	Treat midfoot fracture, each	7.01	NA	NA	7.27	6.96	0.87	NA	NA	15.15	14.84	090
28470		A	Treat metatarsal fracture	1.99	4.40	3.79	3.29	2.71	0.26	6.65	6.04	5.54	4.96	090
28475		A	Treat metatarsal fracture	2.97	5.06	4.43	4.26	3.51	0.41	8.44	7.81	7.64	6.89	090
28476		A	Treat metatarsal fracture	3.38	NA	NA	5.90	5.34	0.46	NA	NA	9.74	9.18	090
28485		A	Treat metatarsal fracture	5.71	NA	NA	7.07	6.57	0.80	NA	NA	13.58	13.08	090
28490		A	Treat big toe fracture	1.09	2.44	2.08	2.00	1.62	0.13	3.66	3.30	3.22	2.84	090
28495		A	Treat big toe fracture	1.58	2.56	2.23	2.04	1.68	0.19	4.33	4.00	3.81	3.45	090
28496		A	Treat big toe fracture	2.33	9.87	7.97	4.20	3.71	0.32	12.52	10.62	6.85	6.36	090
28505		A	Treat big toe fracture	3.81	10.36	8.58	5.93	5.26	0.50	14.67	12.89	10.24	9.57	090
28510		A	Treatment of toe fracture	1.09	2.16	1.86	1.97	1.60	0.13	3.38	3.08	3.19	2.82	090
28515		A	Treatment of toe fracture	1.46	2.39	2.10	1.99	1.65	0.17	4.02	3.73	3.62	3.28	090
28525		A	Treat toe fracture	3.32	9.94	8.02	5.74	4.87	0.44	13.70	11.78	9.50	8.63	090
28530		A	Treat sesamoid bone fracture	1.06	2.69	2.29	2.32	1.88	0.13	3.88	3.48	3.51	3.07	090
28531		A	Treat sesamoid bone fracture	2.35	11.17	8.90	3.34	3.02	0.33	13.85	11.58	6.02	5.70	090
28540		A	Treat foot dislocation	2.04	3.31	2.65	3.31	2.57	0.24	5.59	4.93	5.59	4.85	090
28545		A	Treat foot dislocation	2.45	3.58	3.04	3.58	3.04	0.33	6.36	5.82	6.36	5.82	090
28546		A	Treat foot dislocation	3.20	5.15	4.61	5.15	4.61	0.46	8.81	8.27	8.81	8.27	090
28555		A	Repair foot dislocation	6.30	13.54	11.67	7.83	7.39	0.88	20.72	18.85	15.01	14.57	090
28570		A	Treat foot dislocation	1.66	3.60	3.13	3.60	2.92	0.22	5.48	5.01	5.48	4.80	090
28575		A	Treat foot dislocation	3.31	6.00	5.25	4.92	4.44	0.45	9.76	9.01	8.68	8.20	090
28576		A	Treat foot dislocation	4.17	13.53	10.90	6.03	5.28	0.56	18.26	15.63	10.76	10.01	090
28585		A	Repair foot dislocation	7.99	8.46	7.69	7.57	7.02	1.13	17.58	16.81	16.69	16.14	090
28600		A	Treat foot dislocation	1.89	4.11	3.27	3.95	3.06	0.24	6.24	5.40	6.08	5.19	090
28605		A	Treat foot dislocation	2.71	4.47	3.97	4.47	3.97	0.35	7.53	7.03	7.53	7.03	090
28606		A	Treat foot dislocation	4.90	15.49	12.57	6.59	5.89	0.68	21.07	18.15	12.17	11.47	090
28615		A	Repair foot dislocation	7.77	NA	NA	8.79	7.94	1.09	NA	NA	17.65	16.80	090
28630		A	Treat toe dislocation	1.70	2.04	1.81	2.04	1.67	0.17	3.91	3.68	3.91	3.54	010
28635		A	Treat toe dislocation	1.91	2.40	2.19	2.40	2.00	0.24	4.55	4.34	4.55	4.15	010
28636		A	Treat toe dislocation	2.77	6.52	5.59	3.11	3.03	0.39	9.68	8.75	6.27	6.19	010
28645		A	Repair toe dislocation	4.22	5.87	5.28	3.96	3.85	0.58	10.67	10.08	8.76	8.65	090
28660		A	Treat toe dislocation	1.23	2.87	2.32	2.25	1.86	0.11	4.21	3.66	3.59	3.20	010
28665		A	Treat toe dislocation	1.92	2.53	2.16	2.53	2.03	0.24	4.69	4.32	4.69	4.19	010
28666		A	Treat toe dislocation	2.66	6.47	5.52	2.29	2.38	0.38	9.51	8.56	5.33	5.42	010
28675		A	Repair of toe dislocation	2.92	8.72	7.36	4.46	4.16	0.41	12.05	10.69	7.79	7.49	090
28705		A	Fusion of foot bones	15.21	NA	NA	12.61	13.56	2.13	NA	NA	29.95	30.90	090
28715		A	Fusion of foot bones	13.10	NA	NA	11.78	12.18	1.84	NA	NA	26.72	27.12	090
28725		A	Fusion of foot bones	11.61	NA	NA	10.64	10.54	1.63	NA	NA	23.88	23.78	090
28730		A	Fusion of foot bones	10.76	NA	NA	9.92	9.88	1.51	NA	NA	22.19	22.15	090
28735		A	Fusion of foot bones	10.85	NA	NA	10.21	10.31	1.51	NA	NA	22.57	22.67	090
28737		A	Revision of foot bones	9.64	NA	NA	8.10	8.48	1.36	NA	NA	19.10	19.48	090
28740		A	Fusion of foot bones	8.02	13.29	11.36	8.26	7.59	1.13	22.44	20.51	17.41	16.74	090
28750		A	Fusion of big toe joint	7.30	14.54	12.35	8.49	7.81	1.03	22.87	20.68	16.82	16.14	090
28755		A	Fusion of big toe joint	4.74	8.49	7.37	5.92	5.44	0.66	13.89	12.77	11.32	10.84	090
28760		A	Fusion of big toe joint	7.75	9.59	8.66	7.00	6.72	1.07	18.41	17.48	15.82	15.54	090
28800		A	Amputation of midfoot	8.21	NA	NA	8.64	8.29	0.98	NA	NA	17.83	17.48	090
28805		A	Amputation thru metatarsal	8.39	NA	NA	8.88	8.38	0.97	NA	NA	18.24	17.74	090
28810		A	Amputation toe & metatarsal	6.21	NA	NA	7.69	6.83	0.70	NA	NA	14.60	13.74	090
28820		A	Amputation of toe	4.41	10.94	8.91	6.78	5.79	0.51	15.86	13.83	11.70	10.71	090
28825		A	Partial amputation of toe	3.59	10.01	8.16	6.57	5.58	0.43	14.03	12.18	10.59	9.60	090
28899		C	Foot/toes surgery procedure	0.00	0.00	0.00	0.00	0.00	0.00	0.00	0.00	0.00	0.00	YYY
29000		A	Application of body cast	2.25	2.69	2.52	1.33	1.50	0.30	5.24	5.07	3.88	4.05	000
29010		A	Application of body cast	2.06	2.54	2.54	1.26	1.56	0.27	4.87	4.87	3.59	3.89	000
29015		A	Application of body cast	2.41	2.54	2.54	1.15	1.18	0.21	5.16	5.16	3.77	3.80	000
29020		A	Application of body cast	2.11	2.47	2.35	0.97	0.98	0.16	4.74	4.62	3.24	3.25	000
29025		A	Application of body cast	2.40	2.84	2.33	1.44	1.18	0.26	5.50	4.99	4.10	3.84	000
29035		A	Application of body cast	1.77	2.50	2.41	1.08	1.08	0.24	4.51	4.42	3.09	3.09	000
29040		A	Application of body cast	2.22	1.57	1.73	1.38	1.58	0.35	4.14	4.30	3.95	4.15	000
29044		A	Application of body cast	2.12	2.71	2.60	1.31	1.55	0.29	5.12	5.01	3.72	3.96	000
29046		A	Application of body cast	2.41	2.86	2.75	1.38	1.64	0.34	5.61	5.50	4.13	4.39	000
29049		A	Application of figure eight	0.89	1.54	1.27	0.50	0.43	0.12	2.55	2.28	1.51	1.44	000
29055		A	Application of shoulder cast	1.78	2.16	1.95	1.07	1.13	0.24	4.18	3.97	3.09	3.15	000
29058		A	Application of shoulder cast	1.31	1.81	1.54	0.63	0.65	0.14	3.26	2.99	2.08	2.10	000
29065		A	Application of long arm cast	0.87	1.30	1.19	0.54	0.52	0.12	2.29	2.18	1.53	1.51	000
29075		A	Application of forearm cast	0.77	1.24	1.10	0.47	0.44	0.11	2.12	1.98	1.35	1.32	000
29085		A	Apply hand/wrist cast	0.87	1.29	1.10	0.47	0.42	0.11	2.27	2.08	1.45	1.40	000
29105		A	Apply long arm splint	0.87	1.29	1.10	0.40	0.37	0.11	2.27	2.08	1.38	1.35	000
29125		A	Apply forearm splint	0.59	1.14	0.96	0.29	0.27	0.06	1.79	1.61	0.94	0.92	000

[1] CPT codes and descriptions only are copyright 2000 American Medical Association. All Rights Reserved. Applicable FARS/DFARS Apply.
[2] Copyright 1994 American Dental Association. All rights reserved.
[3] + Indicates RVUs are not used for Medicare payment.
[4] PE RVUs = Practice Expense Relative Value Units.

ADDENDUM B.—RELATIVE VALUE UNITS (RVU'S) AND RELATED INFORMATION—Continued

CPT[1]/ HCPCS[2]	MOD	Status	Description	Physician Work RVUs[3]	Fully Implemented Non-Facility PE RVUs	Year 2001 Transitional Non-Facility PE RVUs	Fully Implemented Facility PE RVUs	Year 2001 Transitional Facility PE RVUs	Mal-Practice RVUs	Fully Implemented Non-Facility Total	Year 2001 Transitional Non-Facility Total	Fully Implemented Facility Total	Year 2001 Transitional Facility Total	Global
29126		A	Apply forearm splint	0.77	1.91	1.54	0.44	0.39	0.06	2.74	2.37	1.27	1.22	000
29130		A	Application of finger splint	0.50	0.91	0.73	0.27	0.23	0.05	1.46	1.28	0.82	0.78	000
29131		A	Application of finger splint	0.55	1.80	1.46	0.38	0.34	0.03	2.38	2.04	0.96	0.92	000
29200		A	Strapping of chest	0.65	1.36	1.09	0.29	0.26	0.04	2.05	1.78	0.98	0.95	000
29220		A	Strapping of low back	0.64	1.05	0.89	0.33	0.30	0.07	1.76	1.60	1.04	1.01	000
29240		A	Strapping of shoulder	0.71	1.43	1.15	0.31	0.31	0.05	2.19	1.91	1.07	1.07	000
29260		A	Strapping of elbow or wrist	0.55	1.15	0.93	0.27	0.24	0.04	1.74	1.52	0.86	0.83	000
29280		A	Strapping of hand or finger	0.51	1.30	1.03	0.27	0.23	0.04	1.85	1.58	0.82	0.78	000
29305		A	Application of hip cast	2.03	2.44	2.34	1.28	1.47	0.29	4.76	4.66	3.60	3.79	000
29325		A	Application of hip casts	2.32	2.59	2.47	1.43	1.60	0.31	5.22	5.10	4.06	4.23	000
29345		A	Application of long leg cast	1.40	1.68	1.54	0.84	0.77	0.19	3.27	3.13	2.43	2.36	000
29355		A	Application of long leg cast	1.53	1.69	1.57	0.87	0.80	0.20	3.42	3.30	2.60	2.53	000
29358		A	Apply long leg cast brace	1.43	1.86	1.82	0.93	0.91	0.19	3.48	3.44	2.55	2.53	000
29365		A	Application of long leg cast	1.18	1.52	1.37	0.71	0.65	0.17	2.87	2.72	2.06	2.00	000
29405		A	Apply short leg cast	0.86	1.20	1.12	0.52	0.50	0.12	2.18	2.10	1.50	1.48	000
29425		A	Apply short leg cast	1.01	1.14	1.12	0.56	0.55	0.14	2.29	2.27	1.71	1.70	000
29435		A	Apply short leg cast	1.18	1.79	1.66	0.79	0.75	0.17	3.14	3.01	2.14	2.10	000
29440		A	Addition of walker to cast	0.57	0.91	0.75	0.32	0.27	0.07	1.55	1.39	0.96	0.91	000
29445		A	Apply rigid leg cast	1.78	2.00	1.96	0.86	1.11	0.24	4.02	3.98	2.88	3.13	000
29450		A	Application of leg cast	1.02	1.20	1.01	0.57	0.48	0.13	2.35	2.16	1.72	1.63	000
29505		A	Application, long leg splint	0.69	1.60	1.36	0.42	0.47	0.06	2.35	2.11	1.17	1.22	000
29515		A	Application lower leg splint	0.73	1.15	0.99	0.42	0.38	0.07	1.95	1.79	1.22	1.18	000
29520		A	Strapping of hip	0.54	1.54	1.25	0.38	0.34	0.02	2.10	1.81	0.94	0.90	000
29530		A	Strapping of knee	0.57	1.22	1.01	0.27	0.30	0.04	1.83	1.62	0.88	0.91	000
29540		A	Strapping of ankle	0.51	0.51	0.47	0.26	0.24	0.04	1.06	1.02	0.81	0.79	000
29550		A	Strapping of toes	0.47	0.49	0.44	0.23	0.21	0.05	1.01	0.96	0.75	0.73	000
29580		A	Application of paste boot	0.57	0.84	0.85	0.31	0.28	0.05	1.46	1.47	0.93	0.90	000
29590		A	Application of foot splint	0.76	0.77	0.65	0.41	0.35	0.06	1.59	1.47	1.23	1.17	000
29700		A	Removal/revision of cast	0.57	0.81	0.70	0.31	0.28	0.07	1.45	1.34	0.95	0.92	000
29705		A	Removal/revision of cast	0.76	0.98	0.83	0.41	0.36	0.10	1.84	1.69	1.27	1.22	000
29710		A	Removal/revision of cast	1.34	1.72	1.41	0.85	0.70	0.17	3.23	2.92	2.36	2.21	000
29715		A	Removal/revision of cast	0.94	3.64	2.96	0.69	0.64	0.08	4.66	3.98	1.71	1.66	000
29720		A	Repair of body cast	0.68	1.46	1.16	0.49	0.40	0.10	2.24	1.94	1.27	1.18	000
29730		A	Windowing of cast	0.75	0.93	0.77	0.39	0.33	0.10	1.78	1.62	1.24	1.18	000
29740		A	Wedging of cast	1.12	1.36	1.12	0.53	0.45	0.15	2.63	2.39	1.80	1.72	000
29750		A	Wedging of clubfoot cast	1.26	1.56	1.31	0.58	0.50	0.16	2.98	2.73	2.00	1.92	000
29799		C	Casting/strapping procedure	0.00	0.00	0.00	0.00	0.00	0.00	0.00	0.00	0.00	0.00	YYY
29800		A	Jaw arthroscopy/surgery	6.43	NA	NA	8.44	7.42	0.84	NA	NA	15.71	14.69	090
29804		A	Jaw arthroscopy/surgery	8.14	NA	NA	8.78	9.01	0.66	NA	NA	17.58	17.81	090
29815		A	Shoulder arthroscopy	5.89	NA	NA	7.32	6.80	0.83	NA	NA	14.04	13.52	090
29819		A	Shoulder arthroscopy/surgery	7.62	NA	NA	9.18	9.16	1.07	NA	NA	17.87	17.85	090
29820		A	Shoulder arthroscopy/surgery	7.07	NA	NA	8.81	8.72	0.99	NA	NA	16.87	16.78	090
29821		A	Shoulder arthroscopy/surgery	7.72	NA	NA	9.18	9.19	1.08	NA	NA	17.98	17.99	090
29822		A	Shoulder arthroscopy/surgery	7.43	NA	NA	9.08	9.03	1.04	NA	NA	17.55	17.50	090
29823		A	Shoulder arthroscopy/surgery	8.17	NA	NA	9.43	9.51	1.15	NA	NA	18.75	18.83	090
29825		A	Shoulder arthroscopy/surgery	7.62	NA	NA	9.19	9.17	1.06	NA	NA	17.87	17.85	090
29826		A	Shoulder arthroscopy/surgery	8.99	NA	NA	9.92	10.12	1.26	NA	NA	20.17	20.37	090
29830		A	Elbow arthroscopy	5.76	NA	NA	5.70	5.72	0.79	NA	NA	12.25	12.27	090
29834		A	Elbow arthroscopy/surgery	6.28	NA	NA	6.48	6.45	0.86	NA	NA	13.62	13.59	090
29835		A	Elbow arthroscopy/surgery	6.48	NA	NA	6.47	6.49	0.88	NA	NA	13.83	13.85	090
29836		A	Elbow arthroscopy/surgery	7.55	NA	NA	7.20	7.31	1.06	NA	NA	15.81	15.92	090
29837		A	Elbow arthroscopy/surgery	6.87	NA	NA	6.78	6.82	0.96	NA	NA	14.61	14.65	090
29838		A	Elbow arthroscopy/surgery	7.71	NA	NA	7.28	7.37	1.07	NA	NA	16.06	16.15	090
29840		A	Wrist arthroscopy	5.54	NA	NA	8.18	7.03	0.69	NA	NA	14.41	13.26	090
29843		A	Wrist arthroscopy/surgery	6.01	NA	NA	7.93	7.47	0.82	NA	NA	14.76	14.30	090
29844		A	Wrist arthroscopy/surgery	6.37	NA	NA	8.08	7.58	0.86	NA	NA	15.31	14.81	090
29845		A	Wrist arthroscopy/surgery	7.52	NA	NA	8.52	8.29	0.84	NA	NA	16.88	16.65	090
29846		A	Wrist arthroscopy/surgery	6.75	NA	NA	10.57	9.94	0.89	NA	NA	18.21	17.58	090
29847		A	Wrist arthroscopy/surgery	7.08	NA	NA	10.51	9.72	0.91	NA	NA	18.50	17.71	090
29848		A	Wrist endoscopy/surgery	5.44	NA	NA	7.73	6.84	0.72	NA	NA	13.89	13.00	090
29850		A	Knee arthroscopy/surgery	8.19	NA	NA	6.91	6.41	0.74	NA	NA	15.84	15.34	090
29851		A	Knee arthroscopy/surgery	13.10	NA	NA	11.33	11.47	1.81	NA	NA	26.24	26.38	090
29855		A	Tibial arthroscopy/surgery	10.62	NA	NA	9.99	10.66	1.50	NA	NA	22.11	22.78	090
29856		A	Tibial arthroscopy/surgery	14.14	NA	NA	11.94	12.13	2.00	NA	NA	28.08	28.27	090
29860		A	Hip arthroscopy, dx	8.05	NA	NA	7.60	7.01	1.14	NA	NA	16.79	16.20	090
29861		A	Hip arthroscopy/surgery	9.15	NA	NA	8.74	9.10	1.29	NA	NA	19.18	19.54	090
29862		A	Hip arthroscopy/surgery	9.90	NA	NA	9.07	9.54	1.39	NA	NA	20.36	20.83	090
29863		A	Hip arthroscopy/surgery	9.90	NA	NA	9.71	9.65	1.40	NA	NA	21.01	20.95	090
29870		A	Knee arthroscopy, dx	5.07	NA	NA	5.79	5.43	0.67	NA	NA	11.53	11.17	090
29871		A	Knee arthroscopy/drainage	6.55	NA	NA	7.75	7.65	0.88	NA	NA	15.18	15.08	090
29874		A	Knee arthroscopy/surgery	7.05	NA	NA	7.42	7.67	0.87	NA	NA	15.34	15.59	090
29875		A	Knee arthroscopy/surgery	6.31	NA	NA	7.15	7.25	0.88	NA	NA	14.34	14.44	090
29876		A	Knee arthroscopy/surgery	7.92	NA	NA	8.57	8.79	1.11	NA	NA	17.60	17.82	090
29877		A	Knee arthroscopy/surgery	7.35	NA	NA	7.74	8.00	1.03	NA	NA	16.12	16.38	090
29879		A	Knee arthroscopy/surgery	8.04	NA	NA	8.12	8.49	1.13	NA	NA	17.29	17.66	090
29880		A	Knee arthroscopy/surgery	8.50	NA	NA	8.38	8.82	1.19	NA	NA	18.07	18.51	090
29881		A	Knee arthroscopy/surgery	7.76	NA	NA	7.96	8.29	1.09	NA	NA	16.81	17.14	090
29882		A	Knee arthroscopy/surgery	8.65	NA	NA	7.96	8.55	1.09	NA	NA	17.70	18.29	090
29883		A	Knee arthroscopy/surgery	9.46	NA	NA	8.91	9.51	1.33	NA	NA	19.70	20.30	090
29884		A	Knee arthroscopy/surgery	7.33	NA	NA	8.25	8.38	1.03	NA	NA	16.61	16.74	090
29885		A	Knee arthroscopy/surgery	9.09	NA	NA	9.19	9.13	1.27	NA	NA	19.55	19.49	090
29886		A	Knee arthroscopy/surgery	7.54	NA	NA	8.36	8.12	1.06	NA	NA	16.96	16.72	090
29887		A	Knee arthroscopy/surgery	9.04	NA	NA	9.19	9.59	1.27	NA	NA	19.50	19.90	090

[1] CPT codes and descriptions only are copyright 2000 American Medical Association. All Rights Reserved. Applicable FARS/DFARS Apply.
[2] Copyright 1994 American Dental Association. All rights reserved.
[3] + Indicates RVUs are not used for Medicare payment.
[4] PE RVUs = Practice Expense Relative Value Units.

ADDENDUM B.—RELATIVE VALUE UNITS (RVU'S) AND RELATED INFORMATION—Continued

CPT[1]/ HCPCS[2]	MOD	Status	Description	Physician Work RVUs[3]	Fully Implemented Non-Facility PE RVUs	Year 2001 Transitional Non-Facility PE RVUs	Fully Implemented Facility PE RVUs	Year 2001 Transitional Facility PE RVUs	Mal-Practice RVUs	Fully Implemented Non-Facility Total	Year 2001 Transitional Non-Facility Total	Fully Implemented Facility Total	Year 2001 Transitional Facility Total	Global
29888		A	Knee arthroscopy/surgery	13.90	NA	NA	11.86	13.04	1.95	NA	NA	27.71	28.89	090
29889		A	Knee arthroscopy/surgery	15.13	NA	NA	12.45	12.12	2.11	NA	NA	29.69	29.36	090
29891		A	Ankle arthroscopy/surgery	8.40	NA	NA	8.72	8.95	1.17	NA	NA	18.29	18.52	090
29892		A	Ankle arthroscopy/surgery	9.00	NA	NA	8.56	8.83	1.26	NA	NA	18.82	19.09	090
29893		A	Scope, plantar fasciotomy	5.22	NA	NA	4.71	4.94	0.74	NA	NA	10.67	10.90	090
29894		A	Ankle arthroscopy/surgery	7.21	NA	NA	7.36	7.67	1.01	NA	NA	15.58	15.89	090
29895		A	Ankle arthroscopy/surgery	6.99	NA	NA	7.66	7.83	0.97	NA	NA	15.62	15.79	090
29897		A	Ankle arthroscopy/surgery	7.18	NA	NA	8.29	8.36	1.01	NA	NA	16.48	16.55	090
29898		A	Ankle arthroscopy/surgery	8.32	NA	NA	8.12	8.57	1.14	NA	NA	17.58	18.03	090
29909		C	Arthroscopy of joint	0.00	0.00	0.00	0.00	0.00	0.00	0.00	0.00	0.00	0.00	YYY
30000		A	Drainage of nose lesion	1.43	2.41	1.97	1.46	1.18	0.10	3.94	3.50	2.99	2.71	010
30020		A	Drainage of nose lesion	1.43	2.66	2.16	1.53	1.23	0.08	4.17	3.67	3.04	2.74	010
30100		A	Intranasal biopsy	0.94	1.29	1.16	0.52	0.49	0.06	2.29	2.16	1.52	1.49	000
30110		A	Removal of nose polyp(s)	1.63	2.68	2.36	0.89	0.84	0.12	4.43	4.11	2.64	2.59	010
30115		A	Removal of nose polyp(s)	4.35	NA	NA	4.38	4.05	0.31	NA	NA	9.04	8.71	090
30117		A	Removal of intranasal lesion	3.16	4.65	4.26	3.09	3.09	0.22	8.03	7.64	6.47	6.47	090
30118		A	Removal of intranasal lesion	9.69	NA	NA	7.44	7.75	0.66	NA	NA	17.79	18.10	090
30120		A	Revision of nose	5.27	5.87	5.98	5.87	5.98	0.41	11.55	11.66	11.55	11.66	090
30124		A	Removal of nose lesion	3.10	NA	NA	3.30	2.66	0.20	NA	NA	6.60	5.96	090
30125		A	Removal of nose lesion	7.16	NA	NA	6.31	6.24	0.54	NA	NA	14.01	13.94	090
30130		A	Removal of turbinate bones	3.38	NA	NA	3.87	3.36	0.22	NA	NA	7.47	6.96	090
30140		A	Removal of turbinate bones	3.43	NA	NA	4.42	4.14	0.24	NA	NA	8.09	7.81	090
30150		A	Partial removal of nose	9.14	NA	NA	8.45	8.49	0.76	NA	NA	18.35	18.39	090
30160		A	Removal of nose	9.58	NA	NA	8.31	9.09	0.78	NA	NA	18.67	19.45	090
30200		A	Injection treatment of nose	0.78	1.17	0.98	0.44	0.38	0.06	2.01	1.82	1.28	1.22	000
30210		A	Nasal sinus therapy	1.08	2.06	1.62	0.60	0.49	0.08	3.22	2.78	1.76	1.65	010
30220		A	Insert nasal septal button	1.54	2.38	2.20	0.86	0.85	0.11	4.03	3.85	2.51	2.50	010
30300		A	Remove nasal foreign body	1.04	2.51	2.01	0.38	0.35	0.07	3.62	3.12	1.49	1.46	010
30310		A	Remove nasal foreign body	1.96	NA	NA	1.85	1.83	0.14	NA	NA	3.95	3.93	010
30320		A	Remove nasal foreign body	4.52	NA	NA	5.32	5.16	0.36	NA	NA	10.20	10.04	090
30400		R	Reconstruction of nose	9.83	NA	NA	8.59	9.15	0.80	NA	NA	19.22	19.78	090
30410		R	Reconstruction of nose	12.98	NA	NA	10.43	11.70	1.08	NA	NA	24.49	25.76	090
30420		R	Reconstruction of nose	15.88	NA	NA	12.14	13.85	1.24	NA	NA	29.26	30.97	090
30430		R	Revision of nose	7.21	NA	NA	7.03	6.93	0.62	NA	NA	14.86	14.76	090
30435		R	Revision of nose	11.71	NA	NA	10.27	10.46	1.10	NA	NA	23.08	23.27	090
30450		R	Revision of nose	18.65	NA	NA	13.91	13.48	1.53	NA	NA	34.09	33.66	090
30460		A	Revision of nose	9.96	NA	NA	9.30	9.30	0.85	NA	NA	20.11	20.11	090
30462		A	Revision of nose	19.57	NA	NA	14.77	15.73	1.92	NA	NA	36.26	37.22	090
30465		A	Repair nasal stenosis	11.64	NA	NA	9.12	9.12	0.82	NA	NA	21.58	21.58	090
30520		A	Repair of nasal septum	5.70	NA	NA	5.71	5.98	0.41	NA	NA	11.82	12.09	090
30540		A	Repair nasal defect	7.75	NA	NA	6.38	6.59	0.53	NA	NA	14.66	14.87	090
30545		A	Repair nasal defect	11.38	NA	NA	8.21	9.10	0.80	NA	NA	20.39	21.28	090
30560		A	Release of nasal adhesions	1.26	2.26	1.85	1.46	1.17	0.09	3.61	3.20	2.81	2.52	010
30580		A	Repair upper jaw fistula	6.69	4.95	5.41	4.95	4.56	0.50	12.14	12.60	12.14	11.75	090
30600		A	Repair mouth/nose fistula	6.02	5.14	4.88	5.14	4.88	0.70	11.86	11.60	11.86	11.60	090
30620		A	Intranasal reconstruction	5.97	NA	NA	6.40	6.58	0.45	NA	NA	12.82	13.00	090
30630		A	Repair nasal septum defect	7.12	NA	NA	6.86	6.84	0.51	NA	NA	14.49	14.47	090
30801		A	Cauterization, inner nose	1.09	2.46	1.97	2.20	1.72	0.08	3.63	3.14	3.37	2.89	010
30802		A	Cauterization, inner nose	2.03	3.00	2.51	2.74	2.31	0.15	5.18	4.69	4.92	4.49	010
30901		A	Control of nosebleed	1.21	2.05	1.69	0.44	0.41	0.09	3.35	2.99	1.74	1.71	000
30903		A	Control of nosebleed	1.54	2.46	2.08	0.62	0.70	0.12	4.12	3.74	2.28	2.36	000
30905		A	Control of nosebleed	1.97	4.29	3.70	0.88	1.15	0.15	6.41	5.82	3.00	3.27	000
30906		A	Repeat control of nosebleed	2.45	4.52	3.68	1.34	1.30	0.17	7.14	6.30	3.96	3.92	000
30915		A	Ligation, nasal sinus artery	7.20	NA	NA	6.86	6.49	0.50	NA	NA	14.56	14.19	090
30920		A	Ligation, upper jaw artery	9.83	NA	NA	8.32	8.83	0.69	NA	NA	18.84	19.35	090
30930		A	Therapy, fracture of nose	1.26	NA	NA	2.09	1.76	0.09	NA	NA	3.44	3.11	010
30999		C	Nasal surgery procedure	0.00	0.00	0.00	0.00	0.00	0.00	0.00	0.00	0.00	0.00	YYY
31000		A	Irrigation, maxillary sinus	1.15	2.35	1.88	0.63	0.53	0.08	3.58	3.11	1.86	1.76	010
31002		A	Irrigation, sphenoid sinus	1.91	NA	NA	1.96	1.53	0.14	NA	NA	4.01	3.58	010
31020		A	Exploration, maxillary sinus	2.94	4.24	3.90	3.54	3.38	0.20	7.38	7.04	6.68	6.52	090
31030		A	Exploration, maxillary sinus	5.92	4.79	5.36	4.53	5.17	0.42	11.13	11.70	10.87	11.51	090
31032		A	Explore sinus,remove polyps	6.57	NA	NA	5.90	6.39	0.47	NA	NA	12.94	13.43	090
31040		A	Exploration behind upper jaw	9.42	NA	NA	6.74	7.22	0.71	NA	NA	16.87	17.35	090
31050		A	Exploration, sphenoid sinus	5.28	NA	NA	4.93	5.28	0.39	NA	NA	10.60	10.95	090
31051		A	Sphenoid sinus surgery	7.11	NA	NA	6.34	6.88	0.55	NA	NA	14.00	14.54	090
31070		A	Exploration of frontal sinus	4.28	NA	NA	4.86	4.92	0.30	NA	NA	9.44	9.50	090
31075		A	Exploration of frontal sinus	9.16	NA	NA	8.02	8.75	0.64	NA	NA	17.82	18.55	090
31080		A	Removal of frontal sinus	11.42	NA	NA	8.73	9.05	0.78	NA	NA	20.93	21.25	090
31081		A	Removal of frontal sinus	12.75	NA	NA	9.32	9.79	1.84	NA	NA	23.91	24.38	090
31084		A	Removal of frontal sinus	13.51	NA	NA	10.38	11.80	0.96	NA	NA	24.85	26.27	090
31085		A	Removal of frontal sinus	14.20	NA	NA	10.62	12.20	1.18	NA	NA	26.00	27.58	090
31086		A	Removal of frontal sinus	12.86	NA	NA	9.94	10.41	0.90	NA	NA	23.70	24.17	090
31087		A	Removal of frontal sinus	13.10	NA	NA	10.43	10.64	1.15	NA	NA	24.68	24.89	090
31090		A	Exploration of sinuses	9.53	NA	NA	8.66	9.34	0.66	NA	NA	18.85	19.53	090
31200		A	Removal of ethmoid sinus	4.97	NA	NA	5.85	5.64	0.25	NA	NA	11.07	10.86	090
31201		A	Removal of ethmoid sinus	8.37	NA	NA	7.60	7.60	0.58	NA	NA	16.55	16.55	090
31205		A	Removal of ethmoid sinus	10.24	NA	NA	8.48	8.54	0.58	NA	NA	19.30	19.36	090
31225		A	Removal of upper jaw	19.23	NA	NA	14.86	16.42	1.38	NA	NA	35.47	37.03	090
31230		A	Removal of upper jaw	21.94	NA	NA	16.17	18.03	1.57	NA	NA	39.68	41.54	090
31231		A	Nasal endoscopy, dx	1.10	1.90	1.80	0.59	0.82	0.08	3.08	2.98	1.77	2.00	000
31233		A	Nasal/sinus endoscopy, dx	2.18	2.53	2.66	1.18	1.27	0.16	4.87	5.00	3.52	3.61	000
31235		A	Nasal/sinus endoscopy, dx	2.64	2.80	2.75	1.47	1.43	0.18	5.62	5.57	4.29	4.25	000
31237		A	Nasal/sinus endoscopy, surg	2.98	3.07	3.19	1.62	1.66	0.21	6.26	6.38	4.81	4.85	000

[1] CPT codes and descriptions only are copyright 2000 American Medical Association. All Rights Reserved. Applicable FARS/DFARS Apply.
[2] Copyright 1994 American Dental Association. All rights reserved.
[3] + Indicates RVUs are not used for Medicare payment.
[4] PE RVUs = Practice Expense Relative Value Units.

ADDENDUM B.—RELATIVE VALUE UNITS (RVU'S) AND RELATED INFORMATION—Continued

CPT[1]/ HCPCS[2]	MOD	Status	Description	Physician Work RVUs[3]	Fully Implemented Non-Facility PE RVUs	Year 2001 Transitional Non-Facility PE RVUs	Fully Implemented Facility PE RVUs	Year 2001 Transitional Facility PE RVUs	Mal-Practice RVUs	Fully Implemented Non-Facility Total	Year 2001 Transitional Non-Facility Total	Fully Implemented Facility Total	Year 2001 Transitional Facility Total	Global
31238		A	Nasal/sinus endoscopy, surg	3.26	3.58	3.66	1.83	1.86	0.23	7.07	7.15	5.32	5.35	000
31239		A	Nasal/sinus endoscopy, surg	8.70	NA	NA	6.54	7.50	0.46	NA	NA	15.70	16.66	010
31240		A	Nasal/sinus endoscopy, surg	2.61	NA	NA	1.57	1.96	0.18	NA	NA	4.36	4.75	000
31254		A	Revision of ethmoid sinus	4.65	NA	NA	2.72	3.43	0.32	NA	NA	7.69	8.40	000
31255		A	Removal of ethmoid sinus	6.96	NA	NA	4.02	5.09	0.49	NA	NA	11.47	12.54	000
31256		A	Exploration maxillary sinus	3.29	NA	NA	1.95	2.45	0.23	NA	NA	5.47	5.97	000
31267		A	Endoscopy, maxillary sinus	5.46	NA	NA	3.18	3.81	0.38	NA	NA	9.02	9.65	000
31276		A	Sinus endoscopy, surgical	8.85	NA	NA	5.09	5.64	0.62	NA	NA	14.56	15.11	000
31287		A	Nasal/sinus endoscopy, surg	3.92	NA	NA	2.31	2.90	0.27	NA	NA	6.50	7.09	000
31288		A	Nasal/sinus endoscopy, surg	4.58	NA	NA	2.68	3.38	0.32	NA	NA	7.58	8.28	000
31290		A	Nasal/sinus endoscopy, surg	17.24	NA	NA	11.57	13.15	1.20	NA	NA	30.01	31.59	010
31291		A	Nasal/sinus endoscopy, surg	18.19	NA	NA	11.77	13.53	1.73	NA	NA	31.69	33.45	010
31292		A	Nasal/sinus endoscopy, surg	14.76	NA	NA	9.98	11.12	0.99	NA	NA	25.73	26.87	010
31293		A	Nasal/sinus endoscopy, surg	16.21	NA	NA	10.77	12.05	0.97	NA	NA	27.95	29.23	010
31294		A	Nasal/sinus endoscopy, surg	19.06	NA	NA	11.64	13.27	1.04	NA	NA	31.74	33.37	010
31299		C	Sinus surgery procedure	0.00	0.00	0.00	0.00	0.00	0.00	0.00	0.00	0.00	0.00	YYY
31300		A	Removal of larynx lesion	14.29	NA	NA	16.61	15.60	0.99	NA	NA	31.89	30.88	090
31320		A	Diagnostic incision, larynx	5.26	NA	NA	12.92	10.74	0.40	NA	NA	18.58	16.40	090
31360		A	Removal of larynx	17.08	NA	NA	18.44	18.93	1.20	NA	NA	36.72	37.21	090
31365		A	Removal of larynx	24.16	NA	NA	22.05	23.75	1.72	NA	NA	47.93	49.63	090
31367		A	Partial removal of larynx	21.86	NA	NA	22.72	21.71	1.57	NA	NA	46.15	45.14	090
31368		A	Partial removal of larynx	27.09	NA	NA	27.49	27.88	1.90	NA	NA	56.48	56.87	090
31370		A	Partial removal of larynx	21.38	NA	NA	22.64	21.64	1.51	NA	NA	45.53	44.53	090
31375		A	Partial removal of larynx	20.21	NA	NA	20.48	19.39	1.43	NA	NA	42.12	41.03	090
31380		A	Partial removal of larynx	20.21	NA	NA	20.06	19.73	1.40	NA	NA	41.67	41.34	090
31382		A	Partial removal of larynx	20.52	NA	NA	22.21	21.02	1.44	NA	NA	44.17	42.98	090
31390		A	Removal of larynx & pharynx	27.53	NA	NA	27.91	28.28	1.95	NA	NA	57.39	57.76	090
31395		A	Reconstruct larynx & pharynx	31.09	NA	NA	32.98	33.83	2.27	NA	NA	66.34	67.19	090
31400		A	Revision of larynx	10.31	NA	NA	15.04	13.40	0.72	NA	NA	26.07	24.43	090
31420		A	Removal of epiglottis	10.22	NA	NA	14.96	13.41	0.71	NA	NA	25.89	24.34	090
31500		A	Insert emergency airway	2.33	NA	NA	0.67	0.81	0.15	NA	NA	3.15	3.29	000
31502		A	Change of windpipe airway	0.65	1.82	1.52	0.26	0.35	0.04	2.51	2.21	0.95	1.04	000
31505		A	Diagnostic laryngoscopy	0.61	1.72	1.41	0.34	0.32	0.04	2.37	2.06	0.99	0.97	000
31510		A	Laryngoscopy with biopsy	1.92	2.67	2.15	1.01	0.91	0.15	4.74	4.22	3.08	2.98	000
31511		A	Remove foreign body, larynx	2.16	2.93	2.46	0.76	0.83	0.16	5.25	4.78	3.08	3.15	000
31512		A	Removal of larynx lesion	2.07	2.87	2.64	1.13	1.33	0.16	5.10	4.87	3.36	3.56	000
31513		A	Injection into vocal cord	2.10	NA	NA	1.28	1.59	0.15	NA	NA	3.53	3.84	000
31515		A	Laryngoscopy for aspiration	1.80	2.35	2.07	0.84	0.94	0.12	4.27	3.99	2.76	2.86	000
31520		A	Diagnostic laryngoscopy	2.56	NA	NA	1.40	1.50	0.17	NA	NA	4.13	4.23	000
31525		A	Diagnostic laryngoscopy	2.63	2.80	2.70	1.49	1.42	0.18	5.61	5.51	4.30	4.23	000
31526		A	Diagnostic laryngoscopy	2.57	NA	NA	1.54	1.92	0.18	NA	NA	4.29	4.67	000
31527		A	Laryngoscopy for treatment	3.27	NA	NA	1.69	2.08	0.21	NA	NA	5.17	5.56	000
31528		A	Laryngoscopy and dilatation	2.37	NA	NA	1.30	1.68	0.16	NA	NA	3.83	4.21	000
31529		A	Laryngoscopy and dilatation	2.68	NA	NA	1.58	1.85	0.18	NA	NA	4.44	4.71	000
31530		A	Operative laryngoscopy	3.39	NA	NA	1.81	2.34	0.24	NA	NA	5.44	5.97	000
31531		A	Operative laryngoscopy	3.59	NA	NA	2.13	2.67	0.25	NA	NA	5.97	6.51	000
31535		A	Operative laryngoscopy	3.16	NA	NA	1.84	2.33	0.22	NA	NA	5.22	5.71	000
31536		A	Operative laryngoscopy	3.56	NA	NA	2.10	2.64	0.25	NA	NA	5.91	6.45	000
31540		A	Operative laryngoscopy	4.13	NA	NA	2.41	3.04	0.29	NA	NA	6.83	7.46	000
31541		A	Operative laryngoscopy	4.53	NA	NA	2.65	3.23	0.32	NA	NA	7.50	8.08	000
31560		A	Operative laryngoscopy	5.46	NA	NA	3.02	3.62	0.38	NA	NA	8.86	9.46	000
31561		A	Operative laryngoscopy	6.00	NA	NA	3.48	4.31	0.42	NA	NA	9.90	10.73	000
31570		A	Laryngoscopy with injection	3.87	4.07	4.21	2.25	2.27	0.24	8.18	8.32	6.36	6.38	000
31571		A	Laryngoscopy with injection	4.27	NA	NA	2.50	3.10	0.30	NA	NA	7.07	7.67	000
31575		A	Diagnostic laryngoscopy	1.10	2.09	1.99	0.62	0.68	0.08	3.27	3.17	1.80	1.86	000
31576		A	Laryngoscopy with biopsy	1.97	2.36	2.36	0.97	1.32	0.13	4.46	4.46	3.07	3.42	000
31577		A	Remove foreign body, larynx	2.47	2.79	2.83	1.32	1.73	0.17	5.43	5.47	3.96	4.37	000
31578		A	Removal of larynx lesion	2.84	3.01	3.11	1.58	2.03	0.20	6.05	6.15	4.62	5.07	000
31579		A	Diagnostic laryngoscopy	2.26	2.83	2.76	1.21	1.23	0.16	5.25	5.18	3.63	3.65	000
31580		A	Revision of larynx	12.38	NA	NA	15.79	15.54	0.87	NA	NA	29.04	28.79	090
31582		A	Revision of larynx	21.62	NA	NA	21.03	20.62	1.52	NA	NA	44.17	43.76	090
31584		A	Treat larynx fracture	19.64	NA	NA	18.35	17.21	1.42	NA	NA	39.41	38.27	090
31585		A	Treat larynx fracture	4.64	NA	NA	8.35	7.29	0.30	NA	NA	13.29	12.23	090
31586		A	Treat larynx fracture	8.03	NA	NA	11.96	10.75	0.56	NA	NA	20.55	19.34	090
31587		A	Revision of larynx	11.99	NA	NA	13.32	11.95	0.88	NA	NA	26.19	24.82	090
31588		A	Revision of larynx	13.11	NA	NA	16.47	15.26	0.92	NA	NA	30.50	29.29	090
31590		A	Reinnervate larynx	6.97	NA	NA	11.70	10.34	0.50	NA	NA	19.17	17.81	090
31595		A	Larynx nerve surgery	8.34	NA	NA	10.48	9.72	0.62	NA	NA	19.44	18.68	090
31599		C	Larynx surgery procedure	0.00	0.00	0.00	0.00	0.00	0.00	0.00	0.00	0.00	0.00	YYY
31600		A	Incision of windpipe	3.62	NA	NA	1.63	2.30	0.34	NA	NA	5.59	6.26	000
31601		A	Incision of windpipe	4.45	NA	NA	2.15	2.94	0.39	NA	NA	6.99	7.78	000
31603		A	Incision of windpipe	4.15	NA	NA	1.72	2.44	0.35	NA	NA	6.22	6.94	000
31605		A	Incision of windpipe	3.58	NA	NA	1.30	2.05	0.33	NA	NA	5.21	5.96	000
31610		A	Incision of windpipe	8.76	NA	NA	10.55	9.72	0.69	NA	NA	20.00	19.17	090
31611		A	Surgery/speech prosthesis	5.64	NA	NA	9.78	9.09	0.40	NA	NA	15.82	15.13	090
31612		A	Puncture/clear windpipe	0.91	1.47	1.42	0.43	0.60	0.06	2.44	2.39	1.40	1.57	000
31613		A	Repair windpipe opening	4.59	NA	NA	8.74	7.16	0.37	NA	NA	13.70	12.12	090
31614		A	Repair windpipe opening	7.12	NA	NA	11.76	10.65	0.51	NA	NA	19.39	18.28	090
31615		A	Visualization of windpipe	2.09	3.49	3.15	1.19	1.42	0.14	5.72	5.38	3.42	3.65	000
31622		A	Dx bronchoscope/wash	2.78	3.21	3.24	1.17	1.71	0.14	6.13	6.16	4.09	4.63	000
31623		A	Dx bronchoscope/brush	2.88	3.10	3.16	1.17	1.71	0.14	6.12	6.18	4.19	4.73	000
31624		A	Dx bronchoscope/lavage	2.88	2.79	2.93	1.16	1.71	0.13	5.80	5.94	4.17	4.72	000
31625		A	Bronchoscopy with biopsy	3.37	2.83	3.13	1.31	1.99	0.16	6.36	6.66	4.84	5.52	000

[1] CPT codes and descriptions only are copyright 2000 American Medical Association. All Rights Reserved. Applicable FARS/DFARS Apply.
[2] Copyright 1994 American Dental Association. All rights reserved.
[3] + Indicates RVUs are not used for Medicare payment.
[4] PE RVUs = Practice Expense Relative Value Units.

ADDENDUM B.—RELATIVE VALUE UNITS (RVU'S) AND RELATED INFORMATION—Continued

CPT[1]/ HCPCS[2]	MOD	Status	Description	Physician Work RVUs[3]	Fully Implemented Non-Facility PE RVUs	Year 2001 Transitional Non-Facility PE RVUs	Fully Implemented Facility PE RVUs	Year 2001 Transitional Facility PE RVUs	Mal-Practice RVUs	Fully Implemented Non-Facility Total	Year 2001 Transitional Non-Facility Total	Fully Implemented Facility Total	Year 2001 Transitional Facility Total	Global
31628		A	Bronchoscopy with biopsy	3.81	3.13	3.49	1.37	2.17	0.14	7.08	7.44	5.32	6.12	000
31629		A	Bronchoscopy with biopsy	3.37	NA	NA	1.24	1.94	0.13	NA	NA	4.74	5.44	000
31630		A	Bronchoscopy with repair	3.82	NA	NA	2.13	2.61	0.30	NA	NA	6.25	6.73	000
31631		A	Bronchoscopy with dilation	4.37	NA	NA	2.15	2.68	0.31	NA	NA	6.83	7.36	000
31635		A	Remove foreign body, airway	3.68	NA	NA	1.74	2.41	0.21	NA	NA	5.63	6.30	000
31640		A	Bronchoscopy & remove lesion	4.94	NA	NA	2.49	3.23	0.37	NA	NA	7.80	8.54	000
31641		A	Bronchoscopy, treat blockage	5.03	NA	NA	2.23	3.17	0.30	NA	NA	7.56	8.50	000
31643		A	Diag bronchoscope/catheter	3.50	1.16	1.71	1.16	1.71	0.15	4.81	5.36	4.81	5.36	000
31645		A	Bronchoscopy, clear airways	3.16	NA	NA	1.21	1.85	0.13	NA	NA	4.50	5.14	000
31646		A	Bronchoscopy, reclear airway	2.72	NA	NA	1.08	1.62	0.12	NA	NA	3.92	4.46	000
31656		A	Bronchoscopy, inj for xray	2.17	NA	NA	0.92	1.34	0.10	NA	NA	3.19	3.61	000
31700		A	Insertion of airway catheter	1.34	2.42	2.19	0.73	0.92	0.07	3.83	3.60	2.14	2.33	000
31708		A	Instill airway contrast dye	1.41	NA	NA	0.63	0.68	0.06	NA	NA	2.10	2.15	000
31710		A	Insertion of airway catheter	1.30	NA	NA	0.71	0.78	0.06	NA	NA	2.07	2.14	000
31715		A	Injection for bronchus x-ray	1.11	NA	NA	0.63	0.60	0.06	NA	NA	1.80	1.77	000
31717		A	Bronchial brush biopsy	2.12	2.59	2.14	0.87	0.85	0.09	4.80	4.35	3.08	3.06	000
31720		A	Clearance of airways	1.06	1.83	1.57	0.33	0.45	0.06	2.95	2.69	1.45	1.57	000
31725		A	Clearance of airways	1.96	NA	NA	0.61	0.84	0.10	NA	NA	2.67	2.90	000
31730		A	Intro, windpipe wire/tube	2.85	2.34	2.43	1.10	1.50	0.15	5.34	5.43	4.10	4.50	000
31750		A	Repair of windpipe	13.02	NA	NA	15.81	14.27	1.02	NA	NA	29.85	28.31	090
31755		A	Repair of windpipe	15.93	NA	NA	18.41	17.42	1.15	NA	NA	35.49	34.50	090
31760		A	Repair of windpipe	22.35	NA	NA	12.68	12.47	1.48	NA	NA	36.51	36.30	090
31766		A	Reconstruction of windpipe	30.43	NA	NA	20.27	20.20	3.16	NA	NA	53.86	53.79	090
31770		A	Repair/graft of bronchus	22.51	NA	NA	17.92	17.53	2.27	NA	NA	42.70	42.31	090
31775		A	Reconstruct bronchus	23.54	NA	NA	16.73	16.99	2.91	NA	NA	43.18	43.44	090
31780		A	Reconstruct windpipe	17.72	NA	NA	14.13	15.30	1.55	NA	NA	33.40	34.57	090
31781		A	Reconstruct windpipe	23.53	NA	NA	15.44	16.16	2.04	NA	NA	41.01	41.73	090
31785		A	Remove windpipe lesion	17.23	NA	NA	13.28	12.38	1.36	NA	NA	31.87	30.97	090
31786		A	Remove windpipe lesion	23.98	NA	NA	16.25	15.80	2.20	NA	NA	42.43	41.98	090
31800		A	Repair of windpipe injury	7.43	NA	NA	7.82	7.20	0.67	NA	NA	15.92	15.30	090
31805		A	Repair of windpipe injury	13.13	NA	NA	11.99	11.66	1.45	NA	NA	26.57	26.24	090
31820		A	Closure of windpipe lesion	4.49	7.65	6.71	7.65	6.71	0.35	12.49	11.55	12.49	11.55	090
31825		A	Repair of windpipe defect	6.81	11.20	9.76	10.88	9.52	0.50	18.51	17.07	18.19	16.83	090
31830		A	Revise windpipe scar	4.50	7.82	6.86	7.82	6.86	0.36	12.68	11.72	12.68	11.72	090
31899		C	Airways surgical procedure	0.00	0.00	0.00	0.00	0.00	0.00	0.00	0.00	0.00	0.00	YYY
32000		A	Drainage of chest	1.54	2.95	2.46	0.50	0.62	0.07	4.56	4.07	2.11	2.23	000
32002		A	Treatment of collapsed lung	2.19	NA	NA	0.86	1.01	0.11	NA	NA	3.16	3.31	000
32005		A	Treat lung lining chemically	2.19	NA	NA	0.94	1.00	0.17	NA	NA	3.30	3.36	000
32020		A	Insertion of chest tube	3.98	NA	NA	1.60	1.91	0.36	NA	NA	5.94	6.25	000
32035		A	Exploration of chest	8.67	NA	NA	9.68	9.10	1.02	NA	NA	19.37	18.79	090
32036		A	Exploration of chest	9.68	NA	NA	11.37	10.46	1.20	NA	NA	22.25	21.34	090
32095		A	Biopsy through chest wall	8.36	NA	NA	10.48	10.10	0.99	NA	NA	19.83	19.45	090
32100		A	Exploration/biopsy of chest	11.84	NA	NA	11.72	11.84	1.45	NA	NA	25.01	25.13	090
32110		A	Explore/repair chest	13.62	NA	NA	12.70	12.65	1.63	NA	NA	27.95	27.90	090
32120		A	Re-exploration of chest	11.54	NA	NA	12.32	11.81	1.42	NA	NA	25.28	24.77	090
32124		A	Explore chest free adhesions	12.72	NA	NA	11.69	11.74	1.51	NA	NA	25.92	25.97	090
32140		A	Removal of lung lesion(s)	13.93	NA	NA	12.55	12.77	1.68	NA	NA	28.16	28.38	090
32141		A	Remove/treat lung lesions	14.00	NA	NA	12.92	13.33	1.72	NA	NA	28.64	29.05	090
32150		A	Removal of lung lesion(s)	14.15	NA	NA	11.89	11.72	1.60	NA	NA	27.64	27.47	090
32151		A	Remove lung foreign body	14.21	NA	NA	12.91	12.17	1.49	NA	NA	28.61	27.87	090
32160		A	Open chest heart massage	9.30	NA	NA	7.41	8.04	1.01	NA	NA	17.72	18.35	090
32200		A	Drain, open, lung lesion	15.29	NA	NA	12.13	10.97	1.46	NA	NA	28.88	27.72	090
32201		A	Drain, percut, lung lesion	4.00	NA	NA	6.55	5.74	0.18	NA	NA	10.73	9.92	000
32215		A	Treat chest lining	11.33	NA	NA	12.51	11.45	1.34	NA	NA	25.18	24.12	090
32220		A	Release of lung	19.27	NA	NA	15.39	15.83	2.39	NA	NA	37.05	37.49	090
32225		A	Partial release of lung	13.96	NA	NA	12.83	12.84	1.70	NA	NA	28.49	28.50	090
32310		A	Removal of chest lining	13.44	NA	NA	12.35	12.42	1.65	NA	NA	27.44	27.51	090
32320		A	Free/remove chest lining	20.54	NA	NA	14.95	16.12	2.50	NA	NA	37.99	39.16	090
32400		A	Needle biopsy chest lining	1.76	1.82	1.77	0.58	0.84	0.07	3.65	3.60	2.41	2.67	000
32402		A	Open biopsy chest lining	7.56	NA	NA	10.59	10.00	0.91	NA	NA	19.06	18.47	090
32405		A	Biopsy, lung or mediastinum	1.93	2.23	2.25	0.68	1.09	0.09	4.25	4.27	2.70	3.11	000
32420		A	Puncture/clear lung	2.18	NA	NA	0.85	1.05	0.11	NA	NA	3.14	3.34	000
32440		A	Removal of lung	21.02	NA	NA	15.56	16.71	2.56	NA	NA	39.14	40.29	090
32442		A	Sleeve pneumonectomy	26.24	NA	NA	19.00	19.12	3.12	NA	NA	48.36	48.48	090
32445		A	Removal of lung	25.09	NA	NA	16.73	18.10	3.11	NA	NA	44.93	46.30	090
32480		A	Partial removal of lung	18.32	NA	NA	13.52	14.79	2.24	NA	NA	34.08	35.35	090
32482		A	Bilobectomy	19.71	NA	NA	14.63	15.63	2.35	NA	NA	36.69	37.69	090
32484		A	Segmentectomy	20.69	NA	NA	14.88	15.81	2.54	NA	NA	38.11	39.04	090
32486		A	Sleeve lobectomy	23.92	NA	NA	16.63	16.96	3.00	NA	NA	43.55	43.88	090
32488		A	Completion pneumonectomy	25.71	NA	NA	17.76	18.13	3.18	NA	NA	46.65	47.02	090
32491		R	Lung volume reduction	21.25	NA	NA	17.23	17.12	2.66	NA	NA	41.14	41.03	090
32500		A	Partial removal of lung	14.30	NA	NA	13.15	13.52	1.77	NA	NA	29.22	29.59	090
32501		A	Repair bronchus add-on	4.69	NA	NA	1.89	2.59	0.56	NA	NA	7.14	7.84	ZZZ
32520		A	Remove lung & revise chest	21.68	NA	NA	16.19	17.75	2.71	NA	NA	40.58	42.14	090
32522		A	Remove lung & revise chest	24.20	NA	NA	16.48	18.30	2.84	NA	NA	43.52	45.34	090
32525		A	Remove lung & revise chest	26.50	NA	NA	17.47	19.48	3.25	NA	NA	47.22	49.23	090
32540		A	Removal of lung lesion	14.64	NA	NA	13.36	13.19	1.84	NA	NA	29.84	29.67	090
32601		A	Thoracoscopy, diagnostic	5.46	NA	NA	4.57	4.37	0.63	NA	NA	10.66	10.46	000
32602		A	Thoracoscopy, diagnostic	5.96	NA	NA	4.81	4.66	0.70	NA	NA	11.47	11.32	000
32603		A	Thoracoscopy, diagnostic	7.81	NA	NA	5.08	4.75	0.76	NA	NA	13.65	13.32	000
32604		A	Thoracoscopy, diagnostic	8.78	NA	NA	5.98	5.54	0.97	NA	NA	15.73	15.29	000
32605		A	Thoracoscopy, diagnostic	6.93	NA	NA	5.55	5.11	0.86	NA	NA	13.34	12.90	000
32606		A	Thoracoscopy, diagnostic	8.40	NA	NA	5.65	5.29	0.99	NA	NA	15.04	14.68	000

[1] CPT codes and descriptions only are copyright 2000 American Medical Association. All Rights Reserved. Applicable FARS/DFARS Apply.
[2] Copyright 1994 American Dental Association. All rights reserved.
[3] + Indicates RVUs are not used for Medicare payment.
[4] PE RVUs = Practice Expense Relative Value Units.

ADDENDUM B.—RELATIVE VALUE UNITS (RVU'S) AND RELATED INFORMATION—Continued

CPT[1]/ HCPCS[2]	MOD	Status	Description	Physician Work RVUs[3]	Fully Implemented Non-Facility PE RVUs	Year 2001 Transitional Non-Facility PE RVUs	Fully Implemented Facility PE RVUs	Year 2001 Transitional Facility PE RVUs	Mal-Practice RVUs	Fully Implemented Non-Facility Total	Year 2001 Transitional Non-Facility Total	Fully Implemented Facility Total	Year 2001 Transitional Facility Total	Global
32650		A	Thoracoscopy, surgical	10.75	NA	NA	10.88	10.23	1.25	NA	NA	22.88	22.23	090
32651		A	Thoracoscopy, surgical	12.91	NA	NA	10.80	11.31	1.50	NA	NA	25.21	25.72	090
32652		A	Thoracoscopy, surgical	18.66	NA	NA	14.50	15.17	2.30	NA	NA	35.46	36.13	090
32653		A	Thoracoscopy, surgical	12.87	NA	NA	11.59	11.50	1.55	NA	NA	26.01	25.92	090
32654		A	Thoracoscopy, surgical	12.44	NA	NA	9.14	9.98	1.51	NA	NA	23.09	23.93	090
32655		A	Thoracoscopy, surgical	13.10	NA	NA	10.99	11.88	1.53	NA	NA	25.62	26.51	090
32656		A	Thoracoscopy, surgical	12.91	NA	NA	12.44	12.96	1.61	NA	NA	26.96	27.48	090
32657		A	Thoracoscopy, surgical	13.65	NA	NA	11.81	12.51	1.64	NA	NA	27.10	27.80	090
32658		A	Thoracoscopy, surgical	11.63	NA	NA	13.17	13.35	1.47	NA	NA	26.27	26.45	090
32659		A	Thoracoscopy, surgical	11.59	NA	NA	11.24	11.89	1.39	NA	NA	24.22	24.87	090
32660		A	Thoracoscopy, surgical	17.43	NA	NA	13.34	15.21	2.09	NA	NA	32.86	34.73	090
32661		A	Thoracoscopy, surgical	13.25	NA	NA	12.60	11.96	1.66	NA	NA	27.51	26.87	090
32662		A	Thoracoscopy, surgical	16.44	NA	NA	13.52	14.09	2.01	NA	NA	31.97	32.54	090
32663		A	Thoracoscopy, surgical	18.47	NA	NA	14.39	15.45	2.28	NA	NA	35.14	36.20	090
32664		A	Thoracoscopy, surgical	14.20	NA	NA	10.97	11.09	1.70	NA	NA	26.87	26.99	090
32665		A	Thoracoscopy, surgical	15.54	NA	NA	11.15	12.25	1.79	NA	NA	28.48	29.58	090
32800		A	Repair lung hernia	13.69	NA	NA	11.78	11.08	1.51	NA	NA	26.98	26.28	090
32810		A	Close chest after drainage	13.05	NA	NA	11.97	10.74	1.55	NA	NA	26.57	25.34	090
32815		A	Close bronchial fistula	23.15	NA	NA	17.03	16.90	2.84	NA	NA	43.02	42.89	090
32820		A	Reconstruct injured chest	21.48	NA	NA	15.38	16.69	2.31	NA	NA	39.17	40.48	090
32850		X	Donor pneumonectomy	0.00	0.00	0.00	0.00	0.00	0.00	0.00	0.00	0.00	0.00	XXX
32851		A	Lung transplant, single	38.63	NA	NA	24.78	25.52	4.90	NA	NA	68.31	69.05	090
32852		A	Lung transplant with bypass	41.80	NA	NA	27.82	28.38	5.17	NA	NA	74.79	75.35	090
32853		A	Lung transplant, double	47.81	NA	NA	29.36	30.69	6.13	NA	NA	83.30	84.63	090
32854		A	Lung transplant with bypass	50.98	NA	NA	29.22	31.17	6.41	NA	NA	86.61	88.56	090
32900		A	Removal of rib(s)	20.27	NA	NA	14.52	13.19	2.42	NA	NA	37.21	35.88	090
32905		A	Revise & repair chest wall	20.75	NA	NA	15.18	14.84	2.54	NA	NA	38.47	38.13	090
32906		A	Revise & repair chest wall	26.77	NA	NA	18.98	18.42	3.30	NA	NA	49.05	48.49	090
32940		A	Revision of lung	19.43	NA	NA	15.29	14.55	2.47	NA	NA	37.19	36.45	090
32960		A	Therapeutic pneumothorax	1.84	1.47	1.36	0.61	0.71	0.12	3.43	3.32	2.57	2.67	000
32997		A	Total lung lavage	6.00	NA	NA	2.32	2.32	0.55	NA	NA	8.87	8.87	000
32999		C	Chest surgery procedure	0.00	0.00	0.00	0.00	0.00	0.00	0.00	0.00	0.00	0.00	YYY
33010		A	Drainage of heart sac	2.24	NA	NA	1.03	1.19	0.13	NA	NA	3.40	3.56	000
33011		A	Repeat drainage of heart sac	2.24	NA	NA	1.09	0.97	0.13	NA	NA	3.46	3.34	000
33015		A	Incision of heart sac	6.80	NA	NA	5.24	5.09	0.64	NA	NA	12.68	12.53	090
33020		A	Incision of heart sac	12.61	NA	NA	9.90	11.02	1.50	NA	NA	24.01	25.13	090
33025		A	Incision of heart sac	12.09	NA	NA	10.17	11.24	1.50	NA	NA	23.76	24.83	090
33030		A	Partial removal of heart sac	18.71	NA	NA	16.32	17.82	2.40	NA	NA	37.43	38.93	090
33031		A	Partial removal of heart sac	21.79	NA	NA	17.72	16.89	2.78	NA	NA	42.29	41.46	090
33050		A	Removal of heart sac lesion	14.36	NA	NA	12.87	12.16	1.73	NA	NA	28.96	28.25	090
33120		A	Removal of heart lesion	24.56	NA	NA	20.91	23.01	3.06	NA	NA	48.53	50.63	090
33130		A	Removal of heart lesion	21.39	NA	NA	16.53	16.06	2.51	NA	NA	40.43	39.96	090
33140		A	Heart revascularize (tmr)	20.00	NA	NA	12.79	12.79	2.27	NA	NA	35.06	35.06	090
33141		A	Heart tmr w/other procedure	4.84	NA	NA	1.97	1.97	0.60	NA	NA	7.41	7.41	ZZZ
33200		A	Insertion of heart pacemaker	12.48	NA	NA	11.73	12.13	1.17	NA	NA	25.38	25.78	090
33201		A	Insertion of heart pacemaker	10.18	NA	NA	12.53	12.43	1.21	NA	NA	23.92	23.82	090
33206		A	Insertion of heart pacemaker	6.67	NA	NA	6.17	6.62	0.50	NA	NA	13.34	13.79	090
33207		A	Insertion of heart pacemaker	8.04	NA	NA	6.62	7.36	0.57	NA	NA	15.23	15.97	090
33208		A	Insertion of heart pacemaker	8.13	NA	NA	6.74	7.48	0.54	NA	NA	15.41	16.15	090
33210		A	Insertion of heart electrode	3.30	NA	NA	1.38	1.93	0.17	NA	NA	4.85	5.40	000
33211		A	Insertion of heart electrode	3.40	NA	NA	1.48	2.01	0.17	NA	NA	5.05	5.58	000
33212		A	Insertion of pulse generator	5.52	NA	NA	5.00	5.21	0.44	NA	NA	10.96	11.17	090
33213		A	Insertion of pulse generator	6.37	NA	NA	5.35	5.47	0.46	NA	NA	12.18	12.30	090
33214		A	Upgrade of pacemaker system	7.75	NA	NA	6.50	6.34	0.52	NA	NA	14.77	14.61	090
33216		A	Revise eltrd pacing-defib	5.39	NA	NA	5.39	5.41	0.36	NA	NA	11.14	11.16	090
33217		A	Revise eltrd pacing-defib	5.75	NA	NA	5.73	5.66	0.36	NA	NA	11.84	11.77	090
33218		A	Revise eltrd pacing-defib	5.44	NA	NA	5.03	5.02	0.40	NA	NA	10.87	10.86	090
33220		A	Revise eltrd pacing-defib	5.52	NA	NA	5.09	5.06	0.39	NA	NA	11.00	10.97	090
33222		A	Revise pocket, pacemaker	4.96	NA	NA	4.46	4.83	0.39	NA	NA	9.81	10.18	090
33223		A	Revise pocket, pacing-defib	6.46	NA	NA	5.76	5.87	0.44	NA	NA	12.66	12.77	090
33233		A	Removal of pacemaker system	3.29	NA	NA	4.33	3.97	0.22	NA	NA	7.84	7.48	090
33234		A	Removal of pacemaker system	7.82	NA	NA	6.36	5.54	0.56	NA	NA	14.74	13.92	090
33235		A	Removal pacemaker electrode	9.40	NA	NA	7.15	6.22	0.68	NA	NA	17.23	16.30	090
33236		A	Remove electrode/thoracotomy	12.60	NA	NA	11.65	9.82	1.49	NA	NA	25.74	23.91	090
33237		A	Remove electrode/thoracotomy	13.71	NA	NA	12.58	12.04	1.57	NA	NA	27.86	27.32	090
33238		A	Remove electrode/thoracotomy	15.22	NA	NA	12.31	12.03	1.56	NA	NA	29.09	28.81	090
33240		A	Insert pulse generator	7.60	NA	NA	6.27	6.16	0.53	NA	NA	14.40	14.29	090
33241		A	Remove pulse generator	3.24	NA	NA	3.92	3.53	0.21	NA	NA	7.37	6.98	090
33243		A	Remove eltrd/thoracotomy	22.64	NA	NA	13.30	12.42	2.53	NA	NA	38.47	37.59	090
33244		A	Remove eltrd, transven	13.76	NA	NA	9.41	9.51	1.05	NA	NA	24.22	24.32	090
33245		A	Insert epic eltrd pace-defib	14.30	NA	NA	13.04	14.05	1.28	NA	NA	28.62	29.63	090
33246		A	Insert epic eltrd/generator	20.71	NA	NA	17.92	19.08	2.22	NA	NA	40.85	42.01	090
33249		A	Eltrd/insert pace-defib	14.23	NA	NA	9.80	11.32	0.80	NA	NA	24.83	26.35	090
33250		A	Ablate heart dysrhythm focus	21.85	NA	NA	14.70	14.16	1.01	NA	NA	37.56	37.02	090
33251		A	Ablate heart dysrhythm focus	24.88	NA	NA	18.08	18.01	2.41	NA	NA	45.37	45.30	090
33253		A	Reconstruct atria	31.06	NA	NA	21.93	22.37	3.68	NA	NA	56.67	57.11	090
33261		A	Ablate heart dysrhythm focus	24.88	NA	NA	18.85	17.93	2.82	NA	NA	46.55	45.63	090
33282		A	Implant pat-active ht record	4.17	NA	NA	5.53	5.53	0.39	NA	NA	10.09	10.09	090
33284		A	Remove pat-active ht record	2.50	NA	NA	5.06	5.06	0.23	NA	NA	7.79	7.79	090
33300		A	Repair of heart wound	17.92	NA	NA	15.10	15.22	1.91	NA	NA	34.93	35.05	090
33305		A	Repair of heart wound	21.44	NA	NA	17.60	17.92	2.68	NA	NA	41.72	42.04	090
33310		A	Exploratory heart surgery	18.51	NA	NA	16.13	15.16	2.26	NA	NA	36.90	35.93	090
33315		A	Exploratory heart surgery	22.37	NA	NA	18.07	17.48	2.90	NA	NA	43.34	42.75	090

[1] CPT codes and descriptions only are copyright 2000 American Medical Association. All Rights Reserved. Applicable FARS/DFARS Apply.
[2] Copyright 1994 American Dental Association. All rights reserved.
[3] + Indicates RVUs are not used for Medicare payment.
[4] PE RVUs = Practice Expense Relative Value Units.

ADDENDUM B.—RELATIVE VALUE UNITS (RVU'S) AND RELATED INFORMATION—Continued

CPT[1]/ HCPCS[2]	MOD	Status	Description	Physician Work RVUs[3]	Fully Implemented Non-Facility PE RVUs	Year 2001 Transitional Non-Facility PE RVUs	Fully Implemented Facility PE RVUs	Year 2001 Transitional Facility PE RVUs	Mal-Practice RVUs	Fully Implemented Non-Facility Total	Year 2001 Transitional Non-Facility Total	Fully Implemented Facility Total	Year 2001 Transitional Facility Total	Global
33320		A	Repair major blood vessel(s)	16.79	NA	NA	13.82	14.20	1.66	NA	NA	32.27	32.65	090
33321		A	Repair major vessel	20.20	NA	NA	17.69	19.17	2.70	NA	NA	40.59	42.07	090
33322		A	Repair major blood vessel(s)	20.62	NA	NA	17.11	18.73	2.51	NA	NA	40.24	41.86	090
33330		A	Insert major vessel graft	21.43	NA	NA	16.59	15.88	2.49	NA	NA	40.51	39.80	090
33332		A	Insert major vessel graft	23.96	NA	NA	16.63	16.56	2.45	NA	NA	43.04	42.97	090
33335		A	Insert major vessel graft	30.01	NA	NA	20.90	19.76	3.79	NA	NA	54.70	53.56	090
33400		A	Repair of aortic valve	25.34	NA	NA	22.51	23.99	3.09	NA	NA	50.94	52.42	090
33401		A	Valvuloplasty, open	23.91	NA	NA	20.65	22.60	2.71	NA	NA	47.27	49.22	090
33403		A	Valvuloplasty, w/cp bypass	24.89	NA	NA	21.18	23.00	2.48	NA	NA	48.55	50.37	090
33404		A	Prepare heart-aorta conduit	28.54	NA	NA	23.41	26.04	3.31	NA	NA	55.26	57.89	090
33405		A	Replacement of aortic valve	30.61	NA	NA	21.49	24.39	3.86	NA	NA	55.96	58.86	090
33406		A	Replacement of aortic valve	32.30	NA	NA	21.91	26.07	4.07	NA	NA	58.28	62.44	090
33410		A	Replacement of aortic valve	32.46	NA	NA	22.25	22.25	4.11	NA	NA	58.82	58.82	090
33411		A	Replacement of aortic valve	32.47	NA	NA	22.58	26.63	4.16	NA	NA	59.21	63.26	090
33412		A	Replacement of aortic valve	34.79	NA	NA	28.65	31.87	4.66	NA	NA	68.10	71.32	090
33413		A	Replacement of aortic valve	35.24	NA	NA	26.31	30.25	4.26	NA	NA	65.81	69.75	090
33414		A	Repair of aortic valve	30.35	NA	NA	25.53	28.21	3.79	NA	NA	59.67	62.35	090
33415		A	Revision, subvalvular tissue	27.15	NA	NA	23.86	26.00	3.25	NA	NA	54.26	56.40	090
33416		A	Revise ventricle muscle	30.35	NA	NA	21.75	23.95	3.85	NA	NA	55.95	58.15	090
33417		A	Repair of aortic valve	28.53	NA	NA	25.27	27.47	3.58	NA	NA	57.38	59.58	090
33420		A	Revision of mitral valve	22.70	NA	NA	12.17	14.51	1.48	NA	NA	36.35	38.69	090
33422		A	Revision of mitral valve	25.94	NA	NA	19.49	22.36	3.30	NA	NA	48.73	51.60	090
33425		A	Repair of mitral valve	27.00	NA	NA	18.50	21.93	3.00	NA	NA	48.50	51.93	090
33426		A	Repair of mitral valve	31.03	NA	NA	21.66	24.92	3.87	NA	NA	56.56	59.82	090
33427		A	Repair of mitral valve	33.72	NA	NA	22.30	26.14	4.30	NA	NA	60.32	64.16	090
33430		A	Replacement of mitral valve	31.43	NA	NA	21.86	25.78	3.95	NA	NA	57.24	61.16	090
33460		A	Revision of tricuspid valve	23.60	NA	NA	18.75	21.11	3.02	NA	NA	45.37	47.73	090
33463		A	Valvuloplasty, tricuspid	25.62	NA	NA	19.45	22.23	3.17	NA	NA	48.24	51.02	090
33464		A	Valvuloplasty, tricuspid	27.33	NA	NA	20.33	23.40	3.47	NA	NA	51.13	54.20	090
33465		A	Replace tricuspid valve	28.79	NA	NA	20.51	23.98	3.61	NA	NA	52.91	56.38	090
33468		A	Revision of tricuspid valve	30.12	NA	NA	29.92	31.43	4.00	NA	NA	64.04	65.55	090
33470		A	Revision of pulmonary valve	20.81	NA	NA	17.43	18.45	2.81	NA	NA	41.05	42.07	090
33471		A	Valvotomy, pulmonary valve	22.25	NA	NA	19.39	21.19	3.00	NA	NA	44.64	46.44	090
33472		A	Revision of pulmonary valve	22.25	NA	NA	19.97	21.62	2.92	NA	NA	45.14	46.79	090
33474		A	Revision of pulmonary valve	23.04	NA	NA	17.05	19.66	2.84	NA	NA	42.93	45.54	090
33475		A	Replacement, pulmonary valve	28.41	NA	NA	23.92	26.42	2.64	NA	NA	54.97	57.47	090
33476		A	Revision of heart chamber	25.77	NA	NA	19.07	21.94	2.40	NA	NA	47.24	50.11	090
33478		A	Revision of heart chamber	26.74	NA	NA	20.54	23.39	3.56	NA	NA	50.84	53.69	090
33496		A	Repair, prosth valve clot	27.25	NA	NA	24.25	26.32	3.44	NA	NA	54.94	57.01	090
33500		A	Repair heart vessel fistula	25.55	NA	NA	18.73	21.68	2.80	NA	NA	47.08	50.03	090
33501		A	Repair heart vessel fistula	17.78	NA	NA	14.21	14.50	2.05	NA	NA	34.04	34.33	090
33502		A	Coronary artery correction	21.04	NA	NA	23.73	21.64	2.51	NA	NA	47.28	45.19	090
33503		A	Coronary artery graft	21.78	NA	NA	14.77	17.58	1.42	NA	NA	37.97	40.78	090
33504		A	Coronary artery graft	24.66	NA	NA	23.74	25.17	3.04	NA	NA	51.44	52.87	090
33505		A	Repair artery w/tunnel	26.84	NA	NA	21.54	24.17	1.52	NA	NA	49.90	52.53	090
33506		A	Repair artery, translocation	26.71	NA	NA	16.87	20.62	3.19	NA	NA	46.77	50.52	090
33510		A	CABG, vein, single	25.12	NA	NA	19.14	21.85	3.13	NA	NA	47.39	50.10	090
33511		A	CABG, vein, two	27.40	NA	NA	19.78	23.01	3.34	NA	NA	50.52	53.75	090
33512		A	CABG, vein, three	29.67	NA	NA	20.95	24.57	3.70	NA	NA	54.32	57.94	090
33513		A	CABG, vein, four	31.95	NA	NA	21.98	26.02	3.99	NA	NA	57.92	61.96	090
33514		A	CABG, vein, five	35.00	NA	NA	23.34	27.95	4.37	NA	NA	62.71	67.32	090
33516		A	Cabg, vein, six or more	37.40	NA	NA	24.31	29.40	4.62	NA	NA	66.33	71.42	090
33517		A	CABG, artery-vein, single	2.57	NA	NA	1.06	1.56	0.32	NA	NA	3.95	4.45	ZZZ
33518		A	CABG, artery-vein, two	4.85	NA	NA	1.99	2.94	0.61	NA	NA	7.45	8.40	ZZZ
33519		A	CABG, artery-vein, three	7.12	NA	NA	2.93	4.32	0.89	NA	NA	10.94	12.33	ZZZ
33521		A	CABG, artery-vein, four	9.40	NA	NA	3.88	5.72	1.18	NA	NA	14.46	16.30	ZZZ
33522		A	CABG, artery-vein, five	11.67	NA	NA	4.83	7.11	1.48	NA	NA	17.98	20.26	ZZZ
33523		A	Cabg, art-vein, six or more	13.95	NA	NA	5.76	8.49	1.78	NA	NA	21.49	24.22	ZZZ
33530		A	Coronary artery, bypass/reop	5.86	NA	NA	2.39	3.54	0.73	NA	NA	8.98	10.13	ZZZ
33533		A	CABG, arterial, single	25.83	NA	NA	19.44	22.29	3.24	NA	NA	48.51	51.36	090
33534		A	CABG, arterial, two	28.82	NA	NA	20.12	23.69	3.63	NA	NA	52.57	56.14	090
33535		A	CABG, arterial, three	31.81	NA	NA	21.05	25.28	3.97	NA	NA	56.83	61.06	090
33536		A	Cabg, arterial, four or more	34.79	NA	NA	18.16	24.00	3.29	NA	NA	56.24	62.08	090
33542		A	Removal of heart lesion	28.85	NA	NA	22.87	25.49	3.61	NA	NA	55.33	57.95	090
33545		A	Repair of heart damage	36.78	NA	NA	25.64	28.71	4.40	NA	NA	66.82	69.89	090
33572		A	Open coronary endarterectomy	4.45	NA	NA	1.83	2.25	0.55	NA	NA	6.83	7.25	ZZZ
33600		A	Closure of valve	29.51	NA	NA	20.22	23.97	2.30	NA	NA	52.03	55.78	090
33602		A	Closure of valve	28.54	NA	NA	16.17	20.40	2.90	NA	NA	47.61	51.84	090
33606		A	Anastomosis/artery-aorta	30.74	NA	NA	18.74	23.23	3.59	NA	NA	53.07	57.56	090
33608		A	Repair anomaly w/conduit	31.09	NA	NA	26.78	29.37	4.17	NA	NA	62.04	64.63	090
33610		A	Repair by enlargement	30.61	NA	NA	26.03	28.66	4.02	NA	NA	60.66	63.29	090
33611		A	Repair double ventricle	32.30	NA	NA	24.45	27.98	3.28	NA	NA	60.03	63.56	090
33612		A	Repair double ventricle	33.26	NA	NA	27.40	30.48	4.44	NA	NA	65.10	68.18	090
33615		A	Repair, modified fontan	32.06	NA	NA	28.18	30.71	3.15	NA	NA	63.39	65.92	090
33617		A	Repair single ventricle	34.03	NA	NA	26.43	29.98	4.09	NA	NA	64.55	68.10	090
33619		A	Repair single ventricle	37.57	NA	NA	32.65	35.70	4.71	NA	NA	74.93	77.98	090
33641		A	Repair heart septum defect	21.39	NA	NA	15.59	18.08	2.67	NA	NA	39.65	42.14	090
33645		A	Revision of heart veins	24.82	NA	NA	19.83	22.28	3.27	NA	NA	47.92	50.37	090
33647		A	Repair heart septum defects	28.73	NA	NA	24.10	26.65	3.37	NA	NA	56.20	58.75	090
33660		A	Repair of heart defects	25.54	NA	NA	22.13	24.22	2.82	NA	NA	50.49	52.58	090
33665		A	Repair of heart defects	28.60	NA	NA	24.67	26.99	3.81	NA	NA	57.08	59.40	090
33670		A	Repair of heart chambers	32.73	NA	NA	17.23	22.69	2.18	NA	NA	52.14	57.60	090
33681		A	Repair heart septum defect	27.67	NA	NA	24.25	26.45	3.53	NA	NA	55.45	57.65	090

[1] CPT codes and descriptions only are copyright 2000 American Medical Association. All Rights Reserved. Applicable FARS/DFARS Apply.
[2] Copyright 1994 American Dental Association. All rights reserved.
[3] + Indicates RVUs are not used for Medicare payment.
[4] PE RVUs = Practice Expense Relative Value Units.

ADDENDUM B.—RELATIVE VALUE UNITS (RVU'S) AND RELATED INFORMATION—Continued

CPT[1]/ HCPCS[2]	MOD	Status	Description	Physician Work RVUs[3]	Fully Implemented Non-Facility PE RVUs	Year 2001 Transitional Non-Facility PE RVUs	Fully Implemented Facility PE RVUs	Year 2001 Transitional Facility PE RVUs	Mal-Practice RVUs	Fully Implemented Non-Facility Total	Year 2001 Transitional Non-Facility Total	Fully Implemented Facility Total	Year 2001 Transitional Facility Total	Global
33684		A	Repair heart septum defect	29.65	NA	NA	22.78	25.94	3.77	NA	NA	56.20	59.36	090
33688		A	Repair heart septum defect	30.62	NA	NA	17.23	22.06	3.89	NA	NA	51.74	56.57	090
33690		A	Reinforce pulmonary artery	19.55	NA	NA	19.36	20.36	2.56	NA	NA	41.47	42.47	090
33692		A	Repair of heart defects	30.75	NA	NA	17.94	22.63	3.77	NA	NA	52.46	57.15	090
33694		A	Repair of heart defects	31.73	NA	NA	21.86	25.87	4.27	NA	NA	57.86	61.87	090
33697		A	Repair of heart defects	33.71	NA	NA	25.47	29.16	4.54	NA	NA	63.72	67.41	090
33702		A	Repair of heart defects	26.54	NA	NA	22.29	24.64	3.45	NA	NA	52.28	54.63	090
33710		A	Repair of heart defects	29.71	NA	NA	16.87	21.52	3.85	NA	NA	50.43	55.08	090
33720		A	Repair of heart defect	26.56	NA	NA	20.97	23.66	3.21	NA	NA	50.74	53.43	090
33722		A	Repair of heart defect	28.41	NA	NA	23.23	25.69	3.80	NA	NA	55.44	57.90	090
33730		A	Repair heart-vein defect(s)	31.67	NA	NA	19.96	24.42	2.85	NA	NA	54.48	58.94	090
33732		A	Repair heart-vein defect	28.16	NA	NA	20.83	24.03	2.78	NA	NA	51.77	54.97	090
33735		A	Revision of heart chamber	21.39	NA	NA	14.20	17.62	1.12	NA	NA	36.71	40.13	090
33736		A	Revision of heart chamber	23.52	NA	NA	22.09	23.54	2.70	NA	NA	48.31	49.76	090
33737		A	Revision of heart chamber	21.76	NA	NA	17.82	19.86	2.93	NA	NA	42.51	44.55	090
33750		A	Major vessel shunt	21.41	NA	NA	17.71	19.28	1.74	NA	NA	40.86	42.43	090
33755		A	Major vessel shunt	21.79	NA	NA	17.83	19.37	2.93	NA	NA	42.55	44.09	090
33762		A	Major vessel shunt	21.79	NA	NA	12.73	15.54	1.59	NA	NA	36.11	38.92	090
33764		A	Major vessel shunt & graft	21.79	NA	NA	14.94	17.20	1.93	NA	NA	38.66	40.92	090
33766		A	Major vessel shunt	22.76	NA	NA	21.93	22.44	3.04	NA	NA	47.73	48.24	090
33767		A	Major vessel shunt	24.50	NA	NA	20.58	22.41	3.14	NA	NA	48.22	50.05	090
33770		A	Repair great vessels defect	33.29	NA	NA	22.50	26.81	4.49	NA	NA	60.28	64.59	090
33771		A	Repair great vessels defect	34.65	NA	NA	18.84	24.47	4.67	NA	NA	58.16	63.79	090
33774		A	Repair great vessels defect	30.98	NA	NA	17.37	21.51	4.18	NA	NA	52.53	56.67	090
33775		A	Repair great vessels defect	32.20	NA	NA	17.86	21.88	4.34	NA	NA	54.40	58.42	090
33776		A	Repair great vessels defect	34.04	NA	NA	18.60	23.43	4.58	NA	NA	57.22	62.05	090
33777		A	Repair great vessels defect	33.46	NA	NA	18.37	22.26	4.51	NA	NA	56.34	60.23	090
33778		A	Repair great vessels defect	35.82	NA	NA	19.31	25.17	4.83	NA	NA	59.96	65.82	090
33779		A	Repair great vessels defect	36.21	NA	NA	19.97	25.79	2.40	NA	NA	58.58	64.40	090
33780		A	Repair great vessels defect	36.94	NA	NA	22.67	28.03	5.21	NA	NA	64.82	70.18	090
33781		A	Repair great vessels defect	36.45	NA	NA	19.56	25.55	4.91	NA	NA	60.92	66.91	090
33786		A	Repair arterial trunk	34.84	NA	NA	23.12	27.74	4.69	NA	NA	62.65	67.27	090
33788		A	Revision of pulmonary artery	26.62	NA	NA	19.10	22.27	3.32	NA	NA	49.04	52.21	090
33800		A	Aortic suspension	16.24	NA	NA	12.96	13.56	1.11	NA	NA	30.31	30.91	090
33802		A	Repair vessel defect	17.66	NA	NA	10.81	13.38	1.56	NA	NA	30.03	32.60	090
33803		A	Repair vessel defect	19.60	NA	NA	18.72	19.89	2.63	NA	NA	40.95	42.12	090
33813		A	Repair septal defect	20.65	NA	NA	17.37	19.02	2.78	NA	NA	40.80	42.45	090
33814		A	Repair septal defect	25.77	NA	NA	24.70	26.22	2.52	NA	NA	52.99	54.51	090
33820		A	Revise major vessel	16.29	NA	NA	16.79	17.46	2.10	NA	NA	35.18	35.85	090
33822		A	Revise major vessel	17.32	NA	NA	16.01	17.18	2.33	NA	NA	35.66	36.83	090
33824		A	Revise major vessel	19.52	NA	NA	16.13	17.92	2.61	NA	NA	38.26	40.05	090
33840		A	Remove aorta constriction	20.63	NA	NA	17.46	19.25	2.36	NA	NA	40.45	42.24	090
33845		A	Remove aorta constriction	22.12	NA	NA	20.75	22.16	2.90	NA	NA	45.77	47.18	090
33851		A	Remove aorta constriction	21.27	NA	NA	17.62	19.57	2.86	NA	NA	41.75	43.70	090
33852		A	Repair septal defect	23.71	NA	NA	19.99	22.07	3.19	NA	NA	46.89	48.97	090
33853		A	Repair septal defect	31.72	NA	NA	24.96	28.19	4.23	NA	NA	60.91	64.14	090
33860		A	Ascending aortic graft	33.96	NA	NA	22.74	26.47	4.30	NA	NA	61.00	64.73	090
33861		A	Ascending aortic graft	34.52	NA	NA	22.77	26.50	4.24	NA	NA	61.53	65.26	090
33863		A	Ascending aortic graft	36.47	NA	NA	23.69	27.19	4.60	NA	NA	64.76	68.26	090
33870		A	Transverse aortic arch graft	40.31	NA	NA	24.99	30.76	5.09	NA	NA	70.39	76.16	090
33875		A	Thoracic aortic graft	33.06	NA	NA	21.74	24.78	4.08	NA	NA	58.88	61.92	090
33877		A	Thoracoabdominal graft	42.60	NA	NA	26.54	31.87	5.07	NA	NA	74.21	79.54	090
33910		A	Remove lung artery emboli	24.59	NA	NA	18.51	17.86	3.06	NA	NA	46.16	45.51	090
33915		A	Remove lung artery emboli	21.02	NA	NA	13.32	13.25	1.20	NA	NA	35.54	35.47	090
33916		A	Surgery of great vessel	25.83	NA	NA	16.64	17.25	3.04	NA	NA	45.51	46.12	090
33917		A	Repair pulmonary artery	24.50	NA	NA	22.44	24.14	3.17	NA	NA	50.11	51.81	090
33918		A	Repair pulmonary atresia	26.45	NA	NA	15.57	19.57	3.42	NA	NA	45.44	49.44	090
33919		A	Repair pulmonary atresia	32.67	NA	NA	23.85	27.64	3.48	NA	NA	60.00	63.79	090
33920		A	Repair pulmonary atresia	31.95	NA	NA	18.94	23.74	3.61	NA	NA	54.50	59.30	090
33922		A	Transect pulmonary artery	23.52	NA	NA	17.86	20.42	2.30	NA	NA	43.68	46.24	090
33924		A	Remove pulmonary shunt	5.50	NA	NA	2.22	2.75	0.74	NA	NA	8.46	8.99	ZZZ
33930		X	Removal of donor heart/lung	0.00	0.00	0.00	0.00	0.00	0.00	0.00	0.00	0.00	0.00	XXX
33935		R	Transplantation, heart/lung	60.96	NA	NA	34.74	44.25	8.15	NA	NA	103.85	113.36	090
33940		X	Removal of donor heart	0.00	0.00	0.00	0.00	0.00	0.00	0.00	0.00	0.00	0.00	XXX
33945		R	Transplantation of heart	42.10	NA	NA	27.22	32.98	5.42	NA	NA	74.74	80.50	090
33960		A	External circulation assist	19.36	NA	NA	7.48	7.51	2.14	NA	NA	28.98	29.01	XXX
33961		A	External circulation assist	10.93	NA	NA	4.50	5.28	1.47	NA	NA	16.90	17.68	ZZZ
33968		A	Remove aortic assist device	0.64	NA	NA	0.26	0.26	0.07	NA	NA	0.97	0.97	000
33970		A	Aortic circulation assist	6.75	NA	NA	2.80	4.12	0.70	NA	NA	10.25	11.57	000
33971		A	Aortic circulation assist	9.69	NA	NA	9.88	8.81	0.97	NA	NA	20.54	19.47	090
33973		A	Insert balloon device	9.76	NA	NA	4.01	5.05	1.01	NA	NA	14.78	15.82	000
33974		A	Remove intra-aortic balloon	14.41	NA	NA	13.34	11.51	1.48	NA	NA	29.23	27.40	090
33975		A	Implant ventricular device	21.00	NA	NA	6.41	8.66	1.72	NA	NA	29.13	31.38	XXX
33976		A	Implant ventricular device	23.00	NA	NA	9.37	12.27	2.82	NA	NA	35.19	38.09	XXX
33977		A	Remove ventricular device	19.29	NA	NA	13.41	13.43	2.44	NA	NA	35.14	35.16	090
33978		A	Remove ventricular device	21.73	NA	NA	14.89	15.02	2.66	NA	NA	39.28	39.41	090
33999		C	Cardiac surgery procedure	0.00	0.00	0.00	0.00	0.00	0.00	0.00	0.00	0.00	0.00	YYY
34001		A	Removal of artery clot	12.91	NA	NA	6.28	7.31	1.46	NA	NA	20.65	21.68	090
34051		A	Removal of artery clot	15.21	NA	NA	8.20	8.54	1.90	NA	NA	25.31	25.65	090
34101		A	Removal of artery clot	9.97	NA	NA	5.17	6.14	1.11	NA	NA	16.25	17.22	090
34111		A	Removal of arm artery clot	8.07	NA	NA	4.35	5.32	0.85	NA	NA	13.27	14.24	090
34151		A	Removal of artery clot	16.86	NA	NA	7.88	9.16	1.84	NA	NA	26.58	27.86	090
34201		A	Removal of artery clot	9.13	NA	NA	5.16	6.29	1.02	NA	NA	15.31	16.44	090

[1] CPT codes and descriptions only are copyright 2000 American Medical Association. All Rights Reserved. Applicable FARS/DFARS Apply.
[2] Copyright 1994 American Dental Association. All rights reserved.
[3] + Indicates RVUs are not used for Medicare payment.
[4] PE RVUs = Practice Expense Relative Value Units.

ADDENDUM B.—RELATIVE VALUE UNITS (RVU'S) AND RELATED INFORMATION—Continued

CPT[1]/ HCPCS[2]	MOD	Status	Description	Physician Work RVUs[3]	Fully Implemented Non-Facility PE RVUs	Year 2001 Transitional Non-Facility PE RVUs	Fully Implemented Facility PE RVUs	Year 2001 Transitional Facility PE RVUs	Mal-Practice RVUs	Fully Implemented Non-Facility Total	Year 2001 Transitional Non-Facility Total	Fully Implemented Facility Total	Year 2001 Transitional Facility Total	Global
34203		A	Removal of leg artery clot	12.21	NA	NA	6.45	7.18	1.37	NA	NA	20.03	20.76	090
34401		A	Removal of vein clot	12.86	NA	NA	6.47	7.04	1.20	NA	NA	20.53	21.10	090
34421		A	Removal of vein clot	9.93	NA	NA	5.53	6.17	0.95	NA	NA	16.41	17.05	090
34451		A	Removal of vein clot	14.44	NA	NA	7.39	8.44	1.59	NA	NA	23.42	24.47	090
34471		A	Removal of vein clot	10.18	NA	NA	5.24	4.88	0.90	NA	NA	16.32	15.96	090
34490		A	Removal of vein clot	7.60	NA	NA	5.67	6.23	0.73	NA	NA	14.00	14.56	090
34501		A	Repair valve, femoral vein	10.93	NA	NA	8.84	8.63	1.37	NA	NA	21.14	20.93	090
34502		A	Reconstruct vena cava	26.95	NA	NA	12.39	14.35	2.99	NA	NA	42.33	44.29	090
34510		A	Transposition of vein valve	13.25	NA	NA	9.45	9.50	1.60	NA	NA	24.30	24.35	090
34520		A	Cross-over vein graft	13.74	NA	NA	8.07	8.59	1.41	NA	NA	23.22	23.74	090
34530		A	Leg vein fusion	17.61	NA	NA	9.98	10.84	2.06	NA	NA	29.65	30.51	090
34800		A	Endovasc abdo repair w/tube	20.75	NA	NA	9.72	9.72	1.49	NA	NA	31.96	31.96	090
34802		A	Endovasc abdo repr w/device	23.00	NA	NA	10.62	10.62	1.65	NA	NA	35.27	35.27	090
34804		A	Endovasc abdo repr w/device	23.00	NA	NA	10.62	10.62	1.65	NA	NA	35.27	35.27	090
34808		A	Endovasc abdo occlud device	4.13	NA	NA	1.65	1.65	0.29	NA	NA	6.07	6.07	ZZZ
34812		A	Xpose for endoprosth, aortic	6.75	NA	NA	2.70	2.70	0.49	NA	NA	9.94	9.94	000
34813		A	Xpose for endoprosth, femorl	4.80	NA	NA	1.92	1.92	0.34	NA	NA	7.06	7.06	ZZZ
34820		A	Xpose for endoprosth, iliac	9.75	NA	NA	3.90	3.90	0.70	NA	NA	14.35	14.35	000
34825		A	Endovasc extend prosth, init	12.00	NA	NA	6.23	6.23	0.86	NA	NA	19.09	19.09	090
34826		A	Endovasc exten prosth, addl	4.13	NA	NA	1.65	1.65	0.29	NA	NA	6.07	6.07	ZZZ
34830		A	Open aortic tube prosth repr	32.59	NA	NA	14.81	14.81	2.34	NA	NA	49.74	49.74	090
34831		A	Open aortoiliac prosth repr	35.34	NA	NA	15.90	15.90	2.53	NA	NA	53.77	53.77	090
34832		A	Open aortofemor prosth repr	35.34	NA	NA	15.90	15.90	2.53	NA	NA	53.77	53.77	090
35001		A	Repair defect of artery	19.64	NA	NA	9.28	11.28	2.44	NA	NA	31.36	33.36	090
35002		A	Repair artery rupture, neck	21.00	NA	NA	9.94	10.89	1.82	NA	NA	32.76	33.71	090
35005		A	Repair defect of artery	18.12	NA	NA	8.71	9.32	1.35	NA	NA	28.18	28.79	090
35011		A	Repair defect of artery	11.65	NA	NA	5.68	7.74	1.30	NA	NA	18.63	20.69	090
35013		A	Repair artery rupture, arm	17.40	NA	NA	7.89	9.91	1.91	NA	NA	27.20	29.22	090
35021		A	Repair defect of artery	19.65	NA	NA	10.22	12.59	1.93	NA	NA	31.80	34.17	090
35022		A	Repair artery rupture, chest	23.18	NA	NA	9.89	11.43	1.99	NA	NA	35.06	36.60	090
35045		A	Repair defect of arm artery	11.26	NA	NA	7.02	8.62	1.25	NA	NA	19.53	21.13	090
35081		A	Repair defect of artery	28.01	NA	NA	12.75	15.38	3.20	NA	NA	43.96	46.59	090
35082		A	Repair artery rupture, aorta	36.35	NA	NA	15.42	17.78	4.07	NA	NA	55.84	58.20	090
35091		A	Repair defect of artery	35.40	NA	NA	15.48	17.76	4.09	NA	NA	54.97	57.25	090
35092		A	Repair artery rupture, aorta	38.39	NA	NA	16.20	19.28	4.31	NA	NA	58.90	61.98	090
35102		A	Repair defect of artery	30.76	NA	NA	13.54	16.17	3.44	NA	NA	47.74	50.37	090
35103		A	Repair artery rupture, groin	33.57	NA	NA	14.25	17.79	3.79	NA	NA	51.61	55.15	090
35111		A	Repair defect of artery	16.43	NA	NA	7.81	10.63	1.81	NA	NA	26.05	28.87	090
35112		A	Repair artery rupture,spleen	18.69	NA	NA	8.42	9.15	1.95	NA	NA	29.06	29.79	090
35121		A	Repair defect of artery	25.99	NA	NA	11.62	13.90	2.93	NA	NA	40.54	42.82	090
35122		A	Repair artery rupture, belly	33.45	NA	NA	14.05	15.40	3.54	NA	NA	51.04	52.39	090
35131		A	Repair defect of artery	18.55	NA	NA	9.06	11.10	2.11	NA	NA	29.72	31.76	090
35132		A	Repair artery rupture, groin	21.95	NA	NA	9.79	12.41	2.48	NA	NA	34.22	36.84	090
35141		A	Repair defect of artery	14.46	NA	NA	7.35	9.50	1.65	NA	NA	23.46	25.61	090
35142		A	Repair artery rupture, thigh	15.86	NA	NA	7.62	10.08	1.75	NA	NA	25.23	27.69	090
35151		A	Repair defect of artery	17.00	NA	NA	8.27	10.37	1.93	NA	NA	27.20	29.30	090
35152		A	Repair artery rupture, knee	16.70	NA	NA	8.25	8.70	1.93	NA	NA	26.88	27.33	090
35161		A	Repair defect of artery	18.76	NA	NA	9.88	11.72	2.21	NA	NA	30.85	32.69	090
35162		A	Repair artery rupture	19.78	NA	NA	10.07	12.62	2.21	NA	NA	32.06	34.61	090
35180		A	Repair blood vessel lesion	13.62	NA	NA	6.23	6.67	1.44	NA	NA	21.29	21.73	090
35182		A	Repair blood vessel lesion	17.74	NA	NA	9.01	9.65	1.88	NA	NA	28.63	29.27	090
35184		A	Repair blood vessel lesion	12.25	NA	NA	6.25	7.33	1.34	NA	NA	19.84	20.92	090
35188		A	Repair blood vessel lesion	14.28	NA	NA	7.04	7.48	1.53	NA	NA	22.85	23.29	090
35189		A	Repair blood vessel lesion	18.43	NA	NA	9.21	9.98	2.12	NA	NA	29.76	30.53	090
35190		A	Repair blood vessel lesion	12.75	NA	NA	6.16	7.43	1.33	NA	NA	20.24	21.51	090
35201		A	Repair blood vessel lesion	9.99	NA	NA	5.31	6.72	1.17	NA	NA	16.47	17.88	090
35206		A	Repair blood vessel lesion	9.25	NA	NA	6.55	7.67	1.04	NA	NA	16.84	17.96	090
35207		A	Repair blood vessel lesion	10.15	NA	NA	9.28	9.89	1.15	NA	NA	20.58	21.19	090
35211		A	Repair blood vessel lesion	22.12	NA	NA	18.24	17.31	2.83	NA	NA	43.19	42.26	090
35216		A	Repair blood vessel lesion	18.75	NA	NA	14.34	13.65	2.17	NA	NA	35.26	34.57	090
35221		A	Repair blood vessel lesion	16.42	NA	NA	7.82	8.88	1.79	NA	NA	26.03	27.09	090
35226		A	Repair blood vessel lesion	9.06	NA	NA	7.19	8.10	0.84	NA	NA	17.09	18.00	090
35231		A	Repair blood vessel lesion	12.00	NA	NA	6.52	8.47	1.32	NA	NA	19.84	21.79	090
35236		A	Repair blood vessel lesion	10.54	NA	NA	7.03	8.42	1.19	NA	NA	18.76	20.15	090
35241		A	Repair blood vessel lesion	23.12	NA	NA	19.27	18.11	2.90	NA	NA	45.29	44.13	090
35246		A	Repair blood vessel lesion	19.84	NA	NA	14.83	15.72	2.22	NA	NA	36.89	37.78	090
35251		A	Repair blood vessel lesion	17.49	NA	NA	8.06	8.65	1.87	NA	NA	27.42	28.01	090
35256		A	Repair blood vessel lesion	11.38	NA	NA	7.60	9.07	1.32	NA	NA	20.30	21.77	090
35261		A	Repair blood vessel lesion	11.63	NA	NA	5.81	7.83	1.34	NA	NA	18.78	20.80	090
35266		A	Repair blood vessel lesion	10.30	NA	NA	7.08	8.39	1.16	NA	NA	18.54	19.85	090
35271		A	Repair blood vessel lesion	22.12	NA	NA	17.24	16.33	2.77	NA	NA	42.13	41.22	090
35276		A	Repair blood vessel lesion	18.75	NA	NA	15.47	14.55	2.37	NA	NA	36.59	35.67	090
35281		A	Repair blood vessel lesion	16.48	NA	NA	7.90	10.61	1.82	NA	NA	26.20	28.91	090
35286		A	Repair blood vessel lesion	11.87	NA	NA	7.81	9.04	1.36	NA	NA	21.04	22.27	090
35301		A	Rechanneling of artery	18.70	NA	NA	9.66	11.17	2.23	NA	NA	30.59	32.10	090
35311		A	Rechanneling of artery	23.85	NA	NA	12.08	15.05	2.75	NA	NA	38.68	41.65	090
35321		A	Rechanneling of artery	11.97	NA	NA	5.94	7.97	1.36	NA	NA	19.27	21.30	090
35331		A	Rechanneling of artery	23.52	NA	NA	10.93	11.82	2.71	NA	NA	37.16	38.05	090
35341		A	Rechanneling of artery	25.11	NA	NA	11.25	13.15	2.87	NA	NA	39.23	41.13	090
35351		A	Rechanneling of artery	20.11	NA	NA	9.42	11.12	2.29	NA	NA	31.82	33.52	090
35355		A	Rechanneling of artery	16.09	NA	NA	7.88	10.09	1.80	NA	NA	25.77	27.98	090
35361		A	Rechanneling of artery	23.59	NA	NA	10.67	13.26	2.66	NA	NA	36.92	39.51	090
35363		A	Rechanneling of artery	24.66	NA	NA	11.18	14.56	2.77	NA	NA	38.61	41.99	090

[1] CPT codes and descriptions only are copyright 2000 American Medical Association. All Rights Reserved. Applicable FARS/DFARS Apply.
[2] Copyright 1994 American Dental Association. All rights reserved.
[3] + Indicates RVUs are not used for Medicare payment.
[4] PE RVUs = Practice Expense Relative Value Units.

ADDENDUM B.—RELATIVE VALUE UNITS (RVU'S) AND RELATED INFORMATION—Continued

CPT[1]/ HCPCS[2]	MOD	Status	Description	Physician Work RVUs[3]	Fully Implemented Non-Facility PE RVUs	Year 2001 Transitional Non-Facility PE RVUs	Fully Implemented Facility PE RVUs	Year 2001 Transitional Facility PE RVUs	Mal-Practice RVUs	Fully Implemented Non-Facility Total	Year 2001 Transitional Non-Facility Total	Fully Implemented Facility Total	Year 2001 Transitional Facility Total	Global
35371		A	Rechanneling of artery	11.64	NA	NA	6.01	7.90	1.32	NA	NA	18.97	20.86	090
35372		A	Rechanneling of artery	13.56	NA	NA	6.73	8.09	1.53	NA	NA	21.82	23.18	090
35381		A	Rechanneling of artery	15.81	NA	NA	7.88	9.62	1.80	NA	NA	25.49	27.23	090
35390		A	Reoperation, carotid add-on	3.19	NA	NA	1.22	1.37	0.38	NA	NA	4.79	4.94	ZZZ
35400		A	Angioscopy	3.00	NA	NA	1.10	1.44	0.34	NA	NA	4.44	4.78	ZZZ
35450		A	Repair arterial blockage	10.07	NA	NA	3.91	5.94	0.84	NA	NA	14.82	16.85	000
35452		A	Repair arterial blockage	6.91	NA	NA	3.51	3.81	0.76	NA	NA	11.18	11.48	000
35454		A	Repair arterial blockage	6.04	NA	NA	3.05	4.09	0.67	NA	NA	9.76	10.80	000
35456		A	Repair arterial blockage	7.35	NA	NA	3.56	4.87	0.82	NA	NA	11.73	13.04	000
35458		A	Repair arterial blockage	9.49	NA	NA	4.39	6.04	1.09	NA	NA	14.97	16.62	000
35459		A	Repair arterial blockage	8.63	NA	NA	3.93	5.52	0.96	NA	NA	13.52	15.11	000
35460		A	Repair venous blockage	6.04	NA	NA	2.90	3.03	0.66	NA	NA	9.60	9.73	000
35470		A	Repair arterial blockage	8.63	NA	NA	4.09	5.64	0.50	NA	NA	13.22	14.77	000
35471		A	Repair arterial blockage	10.07	NA	NA	4.78	6.59	0.50	NA	NA	15.35	17.16	000
35472		A	Repair arterial blockage	6.91	NA	NA	3.46	3.58	0.39	NA	NA	10.76	10.88	000
35473		A	Repair arterial blockage	6.04	NA	NA	3.07	4.11	0.34	NA	NA	9.45	10.49	000
35474		A	Repair arterial blockage	7.36	NA	NA	3.60	4.90	0.40	NA	NA	11.36	12.66	000
35475		R	Repair arterial blockage	9.49	NA	NA	4.26	5.94	0.47	NA	NA	14.22	15.90	000
35476		A	Repair venous blockage	6.04	NA	NA	2.94	3.06	0.27	NA	NA	9.25	9.37	000
35480		A	Atherectomy, open	11.08	NA	NA	4.96	7.03	1.13	NA	NA	17.17	19.24	000
35481		A	Atherectomy, open	7.61	NA	NA	3.80	4.03	0.84	NA	NA	12.25	12.48	000
35482		A	Atherectomy, open	6.65	NA	NA	3.28	4.45	0.75	NA	NA	10.68	11.85	000
35483		A	Atherectomy, open	8.10	NA	NA	3.89	5.34	0.81	NA	NA	12.80	14.25	000
35484		A	Atherectomy, open	10.44	NA	NA	4.67	6.25	1.13	NA	NA	16.24	17.82	000
35485		A	Atherectomy, open	9.49	NA	NA	4.40	4.53	1.06	NA	NA	14.95	15.08	000
35490		A	Atherectomy, percutaneous	11.08	NA	NA	5.04	7.09	0.55	NA	NA	16.67	18.72	000
35491		A	Atherectomy, percutaneous	7.61	NA	NA	3.71	3.96	0.49	NA	NA	11.81	12.06	000
35492		A	Atherectomy, percutaneous	6.65	NA	NA	3.36	4.51	0.43	NA	NA	10.44	11.59	000
35493		A	Atherectomy, percutaneous	8.10	NA	NA	4.06	5.46	0.47	NA	NA	12.63	14.03	000
35494		A	Atherectomy, percutaneous	10.44	NA	NA	4.68	6.26	0.48	NA	NA	15.60	17.18	000
35495		A	Atherectomy, percutaneous	9.49	NA	NA	4.79	4.82	0.51	NA	NA	14.79	14.82	000
35500		A	Harvest vein for bypass	6.45	NA	NA	2.12	2.12	0.63	NA	NA	9.20	9.20	ZZZ
35501		A	Artery bypass graft	19.19	NA	NA	9.14	12.11	2.33	NA	NA	30.66	33.63	090
35506		A	Artery bypass graft	19.67	NA	NA	9.17	12.08	2.33	NA	NA	31.17	34.08	090
35507		A	Artery bypass graft	19.67	NA	NA	9.08	11.67	2.27	NA	NA	31.02	33.61	090
35508		A	Artery bypass graft	18.65	NA	NA	8.92	11.60	2.34	NA	NA	29.91	32.59	090
35509		A	Artery bypass graft	18.07	NA	NA	8.36	11.40	2.12	NA	NA	28.55	31.59	090
35511		A	Artery bypass graft	16.83	NA	NA	7.69	8.59	1.74	NA	NA	26.26	27.16	090
35515		A	Artery bypass graft	18.65	NA	NA	8.95	9.77	2.26	NA	NA	29.86	30.68	090
35516		A	Artery bypass graft	16.32	NA	NA	7.53	10.36	1.88	NA	NA	25.73	28.56	090
35518		A	Artery bypass graft	15.42	NA	NA	7.09	9.92	1.78	NA	NA	24.29	27.12	090
35521		A	Artery bypass graft	16.17	NA	NA	7.99	10.75	1.82	NA	NA	25.98	28.74	090
35526		A	Artery bypass graft	20.00	NA	NA	9.96	10.98	2.18	NA	NA	32.14	33.16	090
35531		A	Artery bypass graft	25.61	NA	NA	11.45	14.08	2.91	NA	NA	39.97	42.60	090
35533		A	Artery bypass graft	20.52	NA	NA	9.75	13.02	2.35	NA	NA	32.62	35.89	090
35536		A	Artery bypass graft	23.11	NA	NA	10.33	13.55	2.62	NA	NA	36.06	39.28	090
35541		A	Artery bypass graft	25.80	NA	NA	11.92	14.25	2.74	NA	NA	40.46	42.79	090
35546		A	Artery bypass graft	25.54	NA	NA	11.51	14.44	2.84	NA	NA	39.89	42.82	090
35548		A	Artery bypass graft	21.57	NA	NA	9.78	12.64	2.45	NA	NA	33.80	36.66	090
35549		A	Artery bypass graft	23.35	NA	NA	11.27	14.26	2.77	NA	NA	37.39	40.38	090
35551		A	Artery bypass graft	26.67	NA	NA	12.76	14.79	3.19	NA	NA	42.62	44.65	090
35556		A	Artery bypass graft	21.76	NA	NA	10.15	12.69	2.48	NA	NA	34.39	36.93	090
35558		A	Artery bypass graft	14.04	NA	NA	7.19	9.58	1.58	NA	NA	22.81	25.20	090
35560		A	Artery bypass graft	23.56	NA	NA	10.94	13.69	2.73	NA	NA	37.23	39.98	090
35563		A	Artery bypass graft	15.14	NA	NA	7.31	7.74	1.68	NA	NA	24.13	24.56	090
35565		A	Artery bypass graft	15.14	NA	NA	7.49	10.14	1.71	NA	NA	24.34	26.99	090
35566		A	Artery bypass graft	26.92	NA	NA	14.62	16.56	3.02	NA	NA	44.56	46.50	090
35571		A	Artery bypass graft	18.58	NA	NA	10.74	13.31	2.14	NA	NA	31.46	34.03	090
35582		A	Vein bypass graft	27.13	NA	NA	12.41	15.75	3.11	NA	NA	42.65	45.99	090
35583		A	Vein bypass graft	22.37	NA	NA	11.13	13.89	2.53	NA	NA	36.03	38.79	090
35585		A	Vein bypass graft	28.39	NA	NA	15.24	17.66	3.21	NA	NA	46.84	49.26	090
35587		A	Vein bypass graft	19.05	NA	NA	11.36	14.21	2.17	NA	NA	32.58	35.43	090
35600		A	Harvest artery for cabg	4.95	NA	NA	1.98	1.98	0.54	NA	NA	7.47	7.47	ZZZ
35601		A	Artery bypass graft	17.50	NA	NA	8.11	11.19	2.08	NA	NA	27.69	30.77	090
35606		A	Artery bypass graft	18.71	NA	NA	8.65	11.25	2.17	NA	NA	29.53	32.13	090
35612		A	Artery bypass graft	15.76	NA	NA	7.45	10.13	1.72	NA	NA	24.93	27.61	090
35616		A	Artery bypass graft	15.70	NA	NA	7.74	10.36	1.84	NA	NA	25.28	27.90	090
35621		A	Artery bypass graft	14.54	NA	NA	7.50	9.96	1.68	NA	NA	23.72	26.18	090
35623		A	Bypass graft, not vein	16.62	NA	NA	8.24	8.37	1.91	NA	NA	26.77	26.90	090
35626		A	Artery bypass graft	23.63	NA	NA	11.47	14.17	2.89	NA	NA	37.99	40.69	090
35631		A	Artery bypass graft	24.60	NA	NA	11.15	13.21	2.83	NA	NA	38.58	40.64	090
35636		A	Artery bypass graft	22.46	NA	NA	10.26	11.36	2.37	NA	NA	35.09	36.19	090
35641		A	Artery bypass graft	24.57	NA	NA	11.52	14.22	2.83	NA	NA	38.92	41.62	090
35642		A	Artery bypass graft	17.98	NA	NA	9.16	9.67	1.84	NA	NA	28.98	29.49	090
35645		A	Artery bypass graft	17.47	NA	NA	8.46	9.37	1.91	NA	NA	27.84	28.75	090
35646		A	Artery bypass graft	25.81	NA	NA	11.87	15.36	2.98	NA	NA	40.66	44.15	090
35650		A	Artery bypass graft	14.36	NA	NA	6.70	9.31	1.64	NA	NA	22.70	25.31	090
35651		A	Artery bypass graft	25.04	NA	NA	11.42	15.10	2.53	NA	NA	38.99	42.67	090
35654		A	Artery bypass graft	18.61	NA	NA	8.85	12.19	2.10	NA	NA	29.56	32.90	090
35656		A	Artery bypass graft	19.53	NA	NA	9.15	11.67	2.21	NA	NA	30.89	33.41	090
35661		A	Artery bypass graft	13.18	NA	NA	6.68	8.95	1.50	NA	NA	21.36	23.63	090
35663		A	Artery bypass graft	14.17	NA	NA	7.33	9.73	1.55	NA	NA	23.05	25.45	090
35665		A	Artery bypass graft	15.40	NA	NA	7.63	10.32	1.76	NA	NA	24.79	27.48	090

[1] CPT codes and descriptions only are copyright 2000 American Medical Association. All Rights Reserved. Applicable FARS/DFARS Apply.
[2] Copyright 1994 American Dental Association. All rights reserved.
[3] + Indicates RVUs are not used for Medicare payment.
[4] PE RVUs = Practice Expense Relative Value Units.

ADDENDUM B.—RELATIVE VALUE UNITS (RVU'S) AND RELATED INFORMATION—Continued

CPT[1]/ HCPCS[2]	MOD	Status	Description	Physician Work RVUs[3]	Fully Implemented Non-Facility PE RVUs	Year 2001 Transitional Non-Facility PE RVUs	Fully Implemented Facility PE RVUs	Year 2001 Transitional Facility PE RVUs	Mal-Practice RVUs	Fully Implemented Non-Facility Total	Year 2001 Transitional Non-Facility Total	Fully Implemented Facility Total	Year 2001 Transitional Facility Total	Global
35666		A	Artery bypass graft	19.19	NA	NA	11.57	14.12	2.19	NA	NA	32.95	35.50	090
35671		A	Artery bypass graft	14.80	NA	NA	9.48	11.34	1.68	NA	NA	25.96	27.82	090
35681		A	Composite bypass graft	1.60	NA	NA	2.44	4.24	0.18	NA	NA	4.22	6.02	ZZZ
35682		A	Composite bypass graft	7.20	NA	NA	2.67	4.41	0.83	NA	NA	10.70	12.44	ZZZ
35683		A	Composite bypass graft	8.50	NA	NA	3.18	4.79	0.98	NA	NA	12.66	14.27	ZZZ
35691		A	Arterial transposition	18.05	NA	NA	8.02	11.34	2.06	NA	NA	28.13	31.45	090
35693		A	Arterial transposition	15.36	NA	NA	7.67	8.30	1.80	NA	NA	24.83	25.46	090
35694		A	Arterial transposition	19.16	NA	NA	8.47	8.89	2.13	NA	NA	29.76	30.18	090
35695		A	Arterial transposition	19.16	NA	NA	8.45	8.87	2.19	NA	NA	29.80	30.22	090
35700		A	Reoperation, bypass graft	3.08	NA	NA	3.14	2.79	0.36	NA	NA	6.58	6.23	ZZZ
35701		A	Exploration, carotid artery	5.55	NA	NA	3.65	4.32	0.64	NA	NA	9.84	10.51	090
35721		A	Exploration, femoral artery	5.28	NA	NA	4.88	5.17	0.59	NA	NA	10.75	11.04	090
35741		A	Exploration popliteal artery	5.37	NA	NA	4.72	5.10	0.60	NA	NA	10.69	11.07	090
35761		A	Exploration of artery/vein	5.37	NA	NA	4.66	5.07	0.60	NA	NA	10.63	11.04	090
35800		A	Explore neck vessels	7.02	NA	NA	4.25	4.62	0.79	NA	NA	12.06	12.43	090
35820		A	Explore chest vessels	12.88	NA	NA	5.31	6.13	1.61	NA	NA	19.80	20.62	090
35840		A	Explore abdominal vessels	9.77	NA	NA	5.47	6.07	1.06	NA	NA	16.30	16.90	090
35860		A	Explore limb vessels	5.55	NA	NA	3.80	4.43	0.63	NA	NA	9.98	10.61	090
35870		A	Repair vessel graft defect	22.17	NA	NA	10.80	10.99	2.47	NA	NA	35.44	35.63	090
35875		A	Removal of clot in graft	10.13	NA	NA	6.85	7.37	0.97	NA	NA	17.95	18.47	090
35876		A	Removal of clot in graft	17.00	NA	NA	9.51	9.36	1.88	NA	NA	28.39	28.24	090
35879		A	Revise graft w/vein	16.00	NA	NA	8.58	8.58	1.35	NA	NA	25.93	25.93	090
35881		A	Revise graft w/vein	18.00	NA	NA	9.47	9.47	1.44	NA	NA	28.91	28.91	090
35901		A	Excision, graft, neck	8.19	NA	NA	5.81	6.31	0.90	NA	NA	14.90	15.40	090
35903		A	Excision, graft, extremity	9.39	NA	NA	8.43	8.27	1.03	NA	NA	18.85	18.69	090
35905		A	Excision, graft, thorax	18.19	NA	NA	12.88	11.61	2.15	NA	NA	33.22	31.95	090
35907		A	Excision, graft, abdomen	19.24	NA	NA	9.89	9.37	2.17	NA	NA	31.30	30.78	090
36000		A	Place needle in vein	0.18	0.62	0.53	0.05	0.07	0.01	0.81	0.72	0.24	0.26	XXX
36005		A	Injection, venography	0.95	15.38	11.66	0.34	0.38	0.04	16.37	12.65	1.33	1.37	000
36010		A	Place catheter in vein	2.43	NA	NA	0.88	1.23	0.16	NA	NA	3.47	3.82	XXX
36011		A	Place catheter in vein	3.14	NA	NA	1.16	1.39	0.17	NA	NA	4.47	4.70	XXX
36012		A	Place catheter in vein	3.52	NA	NA	1.29	1.69	0.17	NA	NA	4.98	5.38	XXX
36013		A	Place catheter in artery	2.52	NA	NA	0.81	1.18	0.17	NA	NA	3.50	3.87	XXX
36014		A	Place catheter in artery	3.02	NA	NA	1.11	1.45	0.14	NA	NA	4.27	4.61	XXX
36015		A	Place catheter in artery	3.52	NA	NA	1.29	1.69	0.16	NA	NA	4.97	5.37	XXX
36100		A	Establish access to artery	3.02	NA	NA	1.26	1.65	0.18	NA	NA	4.46	4.85	XXX
36120		A	Establish access to artery	2.01	NA	NA	0.73	1.15	0.11	NA	NA	2.85	3.27	XXX
36140		A	Establish access to artery	2.01	NA	NA	0.72	0.92	0.12	NA	NA	2.85	3.05	XXX
36145		A	Artery to vein shunt	2.01	NA	NA	0.75	1.16	0.10	NA	NA	2.86	3.27	XXX
36160		A	Establish access to aorta	2.52	NA	NA	0.98	1.37	0.20	NA	NA	3.70	4.09	XXX
36200		A	Place catheter in aorta	3.02	NA	NA	1.11	1.57	0.15	NA	NA	4.28	4.74	XXX
36215		A	Place catheter in artery	4.68	NA	NA	1.72	2.05	0.22	NA	NA	6.62	6.95	XXX
36216		A	Place catheter in artery	5.28	NA	NA	1.95	2.36	0.24	NA	NA	7.47	7.88	XXX
36217		A	Place catheter in artery	6.30	NA	NA	2.36	2.83	0.32	NA	NA	8.98	9.45	XXX
36218		A	Place catheter in artery	1.01	NA	NA	0.41	0.48	0.05	NA	NA	1.47	1.54	ZZZ
36245		A	Place catheter in artery	4.68	NA	NA	1.86	2.25	0.23	NA	NA	6.77	7.16	XXX
36246		A	Place catheter in artery	5.28	NA	NA	1.98	2.38	0.26	NA	NA	7.52	7.92	XXX
36247		A	Place catheter in artery	6.30	NA	NA	2.33	2.81	0.32	NA	NA	8.95	9.43	XXX
36248		A	Place catheter in artery	1.01	NA	NA	0.42	0.48	0.06	NA	NA	1.49	1.55	ZZZ
36260		A	Insertion of infusion pump	9.71	NA	NA	5.71	6.11	1.00	NA	NA	16.42	16.82	090
36261		A	Revision of infusion pump	5.45	NA	NA	3.61	3.31	0.50	NA	NA	9.56	9.26	090
36262		A	Removal of infusion pump	4.02	NA	NA	2.58	2.46	0.43	NA	NA	7.03	6.91	090
36299		C	Vessel injection procedure	0.00	0.00	0.00	0.00	0.00	0.00	0.00	0.00	0.00	0.00	YYY
36400		A	Drawing blood	0.18	0.62	0.49	0.05	0.05	0.01	0.81	0.68	0.24	0.24	XXX
36405		A	Drawing blood	0.18	0.55	0.54	0.06	0.11	0.01	0.74	0.73	0.25	0.30	XXX
36406		A	Drawing blood	0.18	0.76	0.61	0.05	0.06	0.01	0.95	0.80	0.24	0.25	XXX
36410		A	Drawing blood	0.18	0.48	0.42	0.05	0.07	0.01	0.67	0.61	0.24	0.26	XXX
36415		I	Drawing blood	0.00	0.00	0.00	0.00	0.00	0.00	0.00	0.00	0.00	0.00	XXX
36420		A	Establish access to vein	1.01	NA	NA	0.32	0.38	0.09	NA	NA	1.42	1.48	XXX
36425		A	Establish access to vein	0.76	3.22	2.44	0.17	0.15	0.05	4.03	3.25	0.98	0.96	XXX
36430		A	Blood transfusion service	0.00	1.00	1.01	1.00	0.88	0.05	1.05	1.06	1.05	0.93	XXX
36440		A	Blood transfusion service	1.03	NA	NA	0.29	0.47	0.08	NA	NA	1.40	1.58	XXX
36450		A	Exchange transfusion service	2.23	NA	NA	0.73	0.80	0.16	NA	NA	3.12	3.19	XXX
36455		A	Exchange transfusion service	2.43	NA	NA	0.97	1.34	0.10	NA	NA	3.50	3.87	XXX
36460		A	Transfusion service, fetal	6.59	NA	NA	2.43	3.10	0.56	NA	NA	9.58	10.25	XXX
36468		R	Injection(s), spider veins	0.00	0.00	0.00	0.00	0.00	0.00	0.00	0.00	0.00	0.00	XXX
36469		R	Injection(s), spider veins	0.00	0.00	0.00	0.00	0.00	0.00	0.00	0.00	0.00	0.00	XXX
36470		A	Injection therapy of vein	1.09	2.59	2.02	0.41	0.35	0.10	3.78	3.21	1.60	1.54	010
36471		A	Injection therapy of veins	1.57	3.23	2.53	0.60	0.50	0.15	4.95	4.25	2.32	2.22	010
36481		A	Insertion of catheter, vein	6.99	NA	NA	2.88	3.60	0.40	NA	NA	10.27	10.99	000
36488		A	Insertion of catheter, vein	1.35	NA	NA	0.75	0.83	0.09	NA	NA	2.19	2.27	000
36489		A	Insertion of catheter, vein	1.22	3.30	2.78	0.68	0.82	0.08	4.60	4.08	1.98	2.12	000
36490		A	Insertion of catheter, vein	1.67	NA	NA	0.89	1.04	0.17	NA	NA	2.73	2.88	000
36491		A	Insertion of catheter, vein	1.43	NA	NA	0.78	1.01	0.13	NA	NA	2.34	2.57	000
36493		A	Repositioning of cvc	1.21	NA	NA	0.85	0.81	0.06	NA	NA	2.12	2.08	000
36500		A	Insertion of catheter, vein	3.52	NA	NA	1.32	1.01	0.14	NA	NA	4.98	4.67	000
36510		A	Insertion of catheter, vein	1.09	NA	NA	0.61	0.51	0.06	NA	NA	1.76	1.66	000
36520		A	Plasma and/or cell exchange	1.74	NA	NA	0.98	1.25	0.06	NA	NA	2.78	3.05	000
36521		A	Apheresis w/ adsorp/reinfuse	1.74	NA	NA	0.98	0.98	0.06	NA	NA	2.78	2.78	000
36522		A	Photopheresis	1.67	5.96	5.14	1.12	1.34	0.07	7.70	6.88	2.86	3.08	000
36530		R	Insertion of infusion pump	6.20	NA	NA	3.75	4.12	0.56	NA	NA	10.51	10.88	010
36531		R	Revision of infusion pump	4.87	NA	NA	3.28	3.65	0.44	NA	NA	8.59	8.96	010
36532		R	Removal of infusion pump	3.30	NA	NA	1.65	1.72	0.34	NA	NA	5.29	5.36	010

[1] CPT codes and descriptions only are copyright 2000 American Medical Association. All Rights Reserved. Applicable FARS/DFARS Apply.
[2] Copyright 1994 American Dental Association. All rights reserved.
[3] + Indicates RVUs are not used for Medicare payment.
[4] PE RVUs = Practice Expense Relative Value Units.

ADDENDUM B.—RELATIVE VALUE UNITS (RVU'S) AND RELATED INFORMATION—Continued

CPT[1]/ HCPCS[2]	MOD	Status	Description	Physician Work RVUs[3]	Fully Implemented Non-Facility PE RVUs	Year 2001 Transitional Non-Facility PE RVUs	Fully Implemented Facility PE RVUs	Year 2001 Transitional Facility PE RVUs	Mal-Practice RVUs	Fully Implemented Non-Facility Total	Year 2001 Transitional Non-Facility Total	Fully Implemented Facility Total	Year 2001 Transitional Facility Total	Global
36533		A	Insertion of access device	5.32	4.33	4.41	3.51	3.80	0.49	10.14	10.22	9.32	9.61	010
36534		A	Revision of access device	2.80	NA	NA	1.51	1.97	0.19	NA	NA	4.50	4.96	010
36535		A	Removal of access device	2.27	2.91	2.67	1.98	1.98	0.21	5.39	5.15	4.46	4.46	010
36540		B	Collect blood venous device	0.00	0.00	0.00	0.00	0.00	0.00	0.00	0.00	0.00	0.00	XXX
36550		A	Declot vascular device	0.00	0.37	0.37	0.06	0.06	0.31	0.68	0.68	0.37	0.37	XXX
36600		A	Withdrawal of arterial blood	0.32	0.40	0.38	0.09	0.14	0.02	0.74	0.72	0.43	0.48	XXX
36620		A	Insertion catheter, artery	1.15	NA	NA	0.25	0.37	0.06	NA	NA	1.46	1.58	000
36625		A	Insertion catheter, artery	2.11	NA	NA	0.61	0.69	0.16	NA	NA	2.88	2.96	000
36640		A	Insertion catheter, artery	2.10	NA	NA	0.78	1.21	0.18	NA	NA	3.06	3.49	000
36660		A	Insertion catheter, artery	1.40	NA	NA	0.46	0.48	0.08	NA	NA	1.94	1.96	000
36680		A	Insert needle, bone cavity	1.20	NA	NA	0.60	0.79	0.08	NA	NA	1.88	2.07	000
36800		A	Insertion of cannula	2.43	NA	NA	1.67	1.86	0.17	NA	NA	4.27	4.46	000
36810		A	Insertion of cannula	3.97	NA	NA	2.49	3.05	0.40	NA	NA	6.86	7.42	000
36815		A	Insertion of cannula	2.62	NA	NA	1.81	2.14	0.26	NA	NA	4.69	5.02	000
36819		A	Av fusion by basilic vein	14.00	NA	NA	6.90	6.90	1.53	NA	NA	22.43	22.43	090
36821		A	Av fusion direct any site	8.93	NA	NA	5.23	5.89	0.97	NA	NA	15.13	15.79	090
36822		A	Insertion of cannula(s)	5.42	NA	NA	10.02	9.04	0.63	NA	NA	16.07	15.09	090
36823		A	Insertion of cannula(s)	21.00	NA	NA	11.80	11.80	2.18	NA	NA	34.98	34.98	090
36825		A	Artery-vein graft	9.84	NA	NA	5.91	7.37	1.09	NA	NA	16.84	18.30	090
36830		A	Artery-vein graft	12.00	NA	NA	6.51	7.59	1.32	NA	NA	19.83	20.91	090
36831		A	Av fistula excision, open	8.00	2.95	2.95	2.95	2.95	0.79	11.74	11.74	11.74	11.74	090
36832		A	Av fistula revision, open	10.50	NA	NA	5.90	6.35	1.13	NA	NA	17.53	17.98	090
36833		A	Av fistula revision	11.95	4.49	4.49	4.49	4.49	1.29	17.73	17.73	17.73	17.73	090
36834		A	Repair A-V aneurysm	9.93	NA	NA	4.09	5.19	1.06	NA	NA	15.08	16.18	090
36835		A	Artery to vein shunt	7.15	NA	NA	4.90	4.60	0.80	NA	NA	12.85	12.55	090
36860		A	External cannula declotting	2.01	2.31	2.43	1.64	1.83	0.10	4.42	4.54	3.75	3.94	000
36861		A	Cannula declotting	2.52	NA	NA	1.80	2.10	0.14	NA	NA	4.46	4.76	000
36870		A	Av fistula revision, open	5.16	30.67	30.67	2.51	2.51	0.40	36.23	36.23	8.07	8.07	090
37140		A	Revision of circulation	23.60	NA	NA	10.58	12.36	1.21	NA	NA	35.39	37.17	090
37145		A	Revision of circulation	24.61	NA	NA	11.00	12.90	2.48	NA	NA	38.09	39.99	090
37160		A	Revision of circulation	21.60	NA	NA	9.52	11.95	2.16	NA	NA	33.28	35.71	090
37180		A	Revision of circulation	24.61	NA	NA	10.97	12.08	2.63	NA	NA	38.21	39.32	090
37181		A	Splice spleen/kidney veins	26.68	NA	NA	11.74	13.26	2.67	NA	NA	41.09	42.61	090
37195		A	Thrombolytic therapy, stroke	0.00	7.99	8.08	7.99	8.08	0.38	8.37	8.46	8.37	8.46	XXX
37200		A	Transcatheter biopsy	4.56	NA	NA	1.65	1.67	0.19	NA	NA	6.40	6.42	000
37201		A	Transcatheter therapy infuse	5.00	NA	NA	2.59	3.44	0.24	NA	NA	7.83	8.68	000
37202		A	Transcatheter therapy infuse	5.68	NA	NA	3.27	3.62	0.38	NA	NA	9.33	9.68	000
37203		A	Transcatheter retrieval	5.03	NA	NA	2.62	3.00	0.23	NA	NA	7.88	8.26	000
37204		A	Transcatheter occlusion	18.14	NA	NA	6.33	8.48	0.85	NA	NA	25.32	27.47	000
37205		A	Transcatheter stent	8.28	NA	NA	3.98	4.39	0.43	NA	NA	12.69	13.10	000
37206		A	Transcatheter stent add-on	4.13	NA	NA	1.62	1.92	0.22	NA	NA	5.97	6.27	ZZZ
37207		A	Transcatheter stent	8.28	NA	NA	3.86	4.30	0.89	NA	NA	13.03	13.47	000
37208		A	Transcatheter stent add-on	4.13	NA	NA	1.56	1.87	0.44	NA	NA	6.13	6.44	ZZZ
37209		A	Exchange arterial catheter	2.27	NA	NA	0.85	1.02	0.11	NA	NA	3.23	3.40	000
37250		A	Iv us first vessel add-on	2.10	NA	NA	0.86	0.96	0.17	NA	NA	3.13	3.23	ZZZ
37251		A	Iv us each add vessel add-on	1.60	NA	NA	0.63	0.71	0.14	NA	NA	2.37	2.45	ZZZ
37565		A	Ligation of neck vein	4.44	NA	NA	2.62	2.99	0.45	NA	NA	7.51	7.88	090
37600		A	Ligation of neck artery	4.57	NA	NA	3.34	3.86	0.40	NA	NA	8.31	8.83	090
37605		A	Ligation of neck artery	6.19	NA	NA	3.89	4.43	0.77	NA	NA	10.85	11.39	090
37606		A	Ligation of neck artery	6.28	NA	NA	3.93	4.55	0.79	NA	NA	11.00	11.62	090
37607		A	Ligation of a-v fistula	6.16	NA	NA	3.84	3.71	0.67	NA	NA	10.67	10.54	090
37609		A	Temporal artery procedure	2.30	6.20	5.25	2.30	2.33	0.21	8.71	7.76	4.81	4.84	010
37615		A	Ligation of neck artery	5.73	NA	NA	3.71	4.31	0.57	NA	NA	10.01	10.61	090
37616		A	Ligation of chest artery	16.49	NA	NA	13.33	11.14	1.93	NA	NA	31.75	29.56	090
37617		A	Ligation of abdomen artery	15.95	NA	NA	7.59	7.86	1.69	NA	NA	25.23	25.50	090
37618		A	Ligation of extremity artery	4.84	NA	NA	3.64	4.08	0.54	NA	NA	9.02	9.46	090
37620		A	Revision of major vein	10.56	NA	NA	5.60	6.59	0.75	NA	NA	16.91	17.90	090
37650		A	Revision of major vein	5.13	NA	NA	3.96	4.06	0.56	NA	NA	9.65	9.75	090
37660		A	Revision of major vein	10.61	NA	NA	6.14	6.17	1.17	NA	NA	17.92	17.95	090
37700		A	Revise leg vein	3.73	NA	NA	3.23	3.41	0.40	NA	NA	7.36	7.54	090
37720		A	Removal of leg vein	5.66	NA	NA	3.82	4.25	0.61	NA	NA	10.09	10.52	090
37730		A	Removal of leg veins	7.33	NA	NA	4.74	5.44	0.77	NA	NA	12.84	13.54	090
37735		A	Removal of leg veins/lesion	10.53	NA	NA	5.99	6.76	1.17	NA	NA	17.69	18.46	090
37760		A	Revision of leg veins	10.47	NA	NA	6.06	6.58	1.11	NA	NA	17.64	18.16	090
37780		A	Revision of leg vein	3.84	NA	NA	2.97	2.74	0.41	NA	NA	7.22	6.99	090
37785		A	Revise secondary varicosity	3.88	6.89	5.43	2.95	2.48	0.41	11.18	9.72	7.24	6.77	090
37788		A	Revascularization, penis	22.01	NA	NA	12.61	13.57	1.35	NA	NA	35.97	36.93	090
37790		A	Penile venous occlusion	8.34	NA	NA	7.23	6.97	0.63	NA	NA	16.20	15.94	090
37799		C	Vascular surgery procedure	0.00	0.00	0.00	0.00	0.00	0.00	0.00	0.00	0.00	0.00	YYY
38100		A	Removal of spleen, total	13.01	NA	NA	6.36	7.09	1.30	NA	NA	20.67	21.40	090
38101		A	Removal of spleen, partial	13.74	NA	NA	6.69	6.92	1.38	NA	NA	21.81	22.04	090
38102		A	Removal of spleen, total	4.80	NA	NA	1.82	2.05	0.49	NA	NA	7.11	7.34	ZZZ
38115		A	Repair of ruptured spleen	14.19	NA	NA	6.81	7.18	1.40	NA	NA	22.40	22.77	090
38120		A	Laparoscopy, splenectomy	17.00	NA	NA	7.79	7.79	1.73	NA	NA	26.52	26.52	090
38129		C	Laparoscope proc, spleen	0.00	0.00	0.00	0.00	0.00	0.00	0.00	0.00	0.00	0.00	YYY
38200		A	Injection for spleen x-ray	2.64	NA	NA	0.98	1.20	0.12	NA	NA	3.74	3.96	000
38230		R	Bone marrow collection	4.54	NA	NA	2.34	2.51	0.25	NA	NA	7.13	7.30	010
38231		R	Stem cell collection	1.50	NA	NA	0.59	0.82	0.05	NA	NA	2.14	2.37	000
38240		R	Bone marrow/stem transplant	2.24	NA	NA	0.85	1.20	0.08	NA	NA	3.17	3.52	XXX
38241		R	Bone marrow/stem transplant	2.24	NA	NA	0.84	1.18	0.08	NA	NA	3.16	3.50	XXX
38300		A	Drainage, lymph node lesion	1.53	4.31	3.39	2.52	1.97	0.15	5.99	5.07	4.20	3.65	010
38305		A	Drainage, lymph node lesion	4.61	7.71	6.32	5.74	4.84	0.36	12.68	11.29	10.71	9.81	090
38308		A	Incision of lymph channels	4.95	NA	NA	5.10	4.74	0.51	NA	NA	10.56	10.20	090

[1] CPT codes and descriptions only are copyright 2000 American Medical Association. All Rights Reserved. Applicable FARS/DFARS Apply.
[2] Copyright 1994 American Dental Association. All rights reserved.
[3] + Indicates RVUs are not used for Medicare payment.
[4] PE RVUs = Practice Expense Relative Value Units.

ADDENDUM B.—RELATIVE VALUE UNITS (RVU'S) AND RELATED INFORMATION—Continued

CPT[1]/ HCPCS[2]	MOD	Status	Description	Physician Work RVUs[3]	Fully Implemented Non-Facility PE RVUs	Year 2001 Transitional Non-Facility PE RVUs	Fully Implemented Facility PE RVUs	Year 2001 Transitional Facility PE RVUs	Mal-Practice RVUs	Fully Implemented Non-Facility Total	Year 2001 Transitional Non-Facility Total	Fully Implemented Facility Total	Year 2001 Transitional Facility Total	Global
38380		A	Thoracic duct procedure	7.46	NA	NA	7.45	6.79	0.68	NA	NA	15.59	14.93	090
38381		A	Thoracic duct procedure	12.88	NA	NA	12.22	11.22	1.58	NA	NA	26.68	25.68	090
38382		A	Thoracic duct procedure	10.08	NA	NA	10.97	9.54	1.08	NA	NA	22.13	20.70	090
38500		A	Biopsy/removal, lymph nodes	2.88	2.64	2.41	2.30	2.16	0.28	5.80	5.57	5.46	5.32	010
38505		A	Needle biopsy, lymph nodes	1.14	2.98	2.54	1.12	0.99	0.09	4.21	3.77	2.35	2.22	000
38510		A	Biopsy/removal, lymph nodes	4.14	NA	NA	4.40	3.99	0.38	NA	NA	8.92	8.51	090
38520		A	Biopsy/removal, lymph nodes	5.12	NA	NA	5.25	4.75	0.52	NA	NA	10.89	10.39	090
38525		A	Biopsy/removal, lymph nodes	4.66	NA	NA	3.93	3.65	0.48	NA	NA	9.07	8.79	090
38530		A	Biopsy/removal, lymph nodes	6.13	NA	NA	5.36	4.88	0.63	NA	NA	12.12	11.64	090
38542		A	Explore deep node(s), neck	5.91	NA	NA	5.99	5.65	0.50	NA	NA	12.40	12.06	090
38550		A	Removal, neck/armpit lesion	6.92	NA	NA	4.94	4.58	0.69	NA	NA	12.55	12.19	090
38555		A	Removal, neck/armpit lesion	14.14	NA	NA	11.79	10.82	1.46	NA	NA	27.39	26.42	090
38562		A	Removal, pelvic lymph nodes	10.49	NA	NA	6.51	6.75	0.97	NA	NA	17.97	18.21	090
38564		A	Removal, abdomen lymph nodes	10.83	NA	NA	6.51	6.89	1.06	NA	NA	18.40	18.78	090
38570		A	Laparoscopy, lymph node biop	9.25	NA	NA	4.61	5.19	0.89	NA	NA	14.75	15.33	010
38571		A	Laparoscopy, lymphadenectomy	12.38	NA	NA	5.48	6.43	0.80	NA	NA	18.66	19.61	010
38572		A	Laparoscopy, lymphadenectomy	14.32	NA	NA	6.43	7.54	1.32	NA	NA	22.07	23.18	010
38589		C	Laparoscope proc, lymphatic	0.00	0.00	0.00	0.00	0.00	0.00	0.00	0.00	0.00	0.00	YYY
38700		A	Removal of lymph nodes, neck	8.24	NA	NA	13.23	12.38	0.60	NA	NA	22.07	21.22	090
38720		A	Removal of lymph nodes, neck	13.61	NA	NA	15.67	15.82	1.03	NA	NA	30.31	30.46	090
38724		A	Removal of lymph nodes, neck	14.54	NA	NA	16.15	16.01	1.10	NA	NA	31.79	31.65	090
38740		A	Remove armpit lymph nodes	6.77	NA	NA	4.73	4.83	0.69	NA	NA	12.19	12.29	090
38745		A	Remove armpit lymph nodes	8.84	NA	NA	6.75	7.31	0.90	NA	NA	16.49	17.05	090
38746		A	Remove thoracic lymph nodes	4.39	NA	NA	1.78	1.96	0.55	NA	NA	6.72	6.90	ZZZ
38747		A	Remove abdominal lymph nodes	4.89	NA	NA	1.86	2.09	0.50	NA	NA	7.25	7.48	ZZZ
38760		A	Remove groin lymph nodes	8.74	NA	NA	5.71	6.08	0.88	NA	NA	15.33	15.70	090
38765		A	Remove groin lymph nodes	16.06	NA	NA	10.08	11.00	1.50	NA	NA	27.64	28.56	090
38770		A	Remove pelvis lymph nodes	13.23	NA	NA	6.87	9.10	0.94	NA	NA	21.04	23.27	090
38780		A	Remove abdomen lymph nodes	16.59	NA	NA	9.23	11.28	1.60	NA	NA	27.42	29.47	090
38790		A	Inject for lymphatic x-ray	1.29	34.73	26.49	0.48	0.75	0.09	36.11	27.87	1.86	2.13	000
38792		A	Identify sentinel node	0.52	NA	NA	0.20	0.20	0.04	NA	NA	0.76	0.76	000
38794		A	Access thoracic lymph duct	4.45	NA	NA	1.69	2.04	0.17	NA	NA	6.31	6.66	090
38999		C	Blood/lymph system procedure	0.00	0.00	0.00	0.00	0.00	0.00	0.00	0.00	0.00	0.00	YYY
39000		A	Exploration of chest	6.10	NA	NA	9.67	8.90	0.73	NA	NA	16.50	15.73	090
39010		A	Exploration of chest	11.79	NA	NA	12.67	12.61	1.46	NA	NA	25.92	25.86	090
39200		A	Removal chest lesion	13.62	NA	NA	12.97	12.87	1.65	NA	NA	28.24	28.14	090
39220		A	Removal chest lesion	17.42	NA	NA	14.48	14.91	2.10	NA	NA	34.00	34.43	090
39400		A	Visualization of chest	5.61	NA	NA	9.43	8.46	0.69	NA	NA	15.73	14.76	010
39499		C	Chest procedure	0.00	0.00	0.00	0.00	0.00	0.00	0.00	0.00	0.00	0.00	YYY
39501		A	Repair diaphragm laceration	13.19	NA	NA	8.44	9.22	1.38	NA	NA	23.01	23.79	090
39502		A	Repair paraesophageal hernia	16.33	NA	NA	8.87	9.89	1.68	NA	NA	26.88	27.90	090
39503		A	Repair of diaphragm hernia	37.54	NA	NA	16.79	19.43	3.52	NA	NA	57.85	60.49	090
39520		A	Repair of diaphragm hernia	16.10	NA	NA	11.37	11.93	1.83	NA	NA	29.30	29.86	090
39530		A	Repair of diaphragm hernia	15.41	NA	NA	9.56	10.99	1.66	NA	NA	26.63	28.06	090
39531		A	Repair of diaphragm hernia	16.42	NA	NA	10.67	10.72	1.83	NA	NA	28.92	28.97	090
39540		A	Repair of diaphragm hernia	13.32	NA	NA	8.54	9.66	1.38	NA	NA	23.24	24.36	090
39541		A	Repair of diaphragm hernia	14.41	NA	NA	8.78	9.89	1.52	NA	NA	24.71	25.82	090
39545		A	Revision of diaphragm	13.37	NA	NA	11.72	10.93	1.55	NA	NA	26.64	25.85	090
39560		A	Resect diaphragm, simple	12.00	NA	NA	8.97	8.97	1.35	NA	NA	22.32	22.32	090
39561		A	Resect diaphragm, complex	17.50	NA	NA	11.08	11.08	1.97	NA	NA	30.55	30.55	090
39599		C	Diaphragm surgery procedure	0.00	0.00	0.00	0.00	0.00	0.00	0.00	0.00	0.00	0.00	YYY
40490		A	Biopsy of lip	1.22	1.63	1.42	0.62	0.57	0.06	2.91	2.70	1.90	1.85	000
40500		A	Partial excision of lip	4.28	5.61	5.49	5.49	5.40	0.31	10.20	10.08	10.08	9.99	090
40510		A	Partial excision of lip	4.70	6.59	6.35	6.33	6.15	0.38	11.67	11.43	11.41	11.23	090
40520		A	Partial excision of lip	4.67	7.58	6.91	6.71	6.25	0.42	12.67	12.00	11.80	11.34	090
40525		A	Reconstruct lip with flap	7.55	NA	NA	8.21	8.41	0.68	NA	NA	16.44	16.64	090
40527		A	Reconstruct lip with flap	9.13	NA	NA	9.06	9.52	0.82	NA	NA	19.01	19.47	090
40530		A	Partial removal of lip	5.40	6.38	6.17	6.18	6.02	0.47	12.25	12.04	12.05	11.89	090
40650		A	Repair lip	3.64	5.38	5.12	4.52	4.48	0.31	9.33	9.07	8.47	8.43	090
40652		A	Repair lip	4.26	6.34	6.03	6.34	6.03	0.39	10.99	10.68	10.99	10.68	090
40654		A	Repair lip	5.31	7.61	7.29	7.37	7.11	0.48	13.40	13.08	13.16	12.90	090
40700		A	Repair cleft lip/nasal	12.79	NA	NA	10.36	10.07	0.93	NA	NA	24.08	23.79	090
40701		A	Repair cleft lip/nasal	15.85	NA	NA	10.09	12.81	1.36	NA	NA	27.30	30.02	090
40702		A	Repair cleft lip/nasal	13.04	NA	NA	9.30	9.52	1.01	NA	NA	23.35	23.57	090
40720		A	Repair cleft lip/nasal	13.55	NA	NA	12.39	11.90	1.31	NA	NA	27.25	26.76	090
40761		A	Repair cleft lip/nasal	14.72	NA	NA	11.59	11.63	1.41	NA	NA	27.72	27.76	090
40799		C	Lip surgery procedure	0.00	0.00	0.00	0.00	0.00	0.00	0.00	0.00	0.00	0.00	YYY
40800		A	Drainage of mouth lesion	1.17	1.91	1.63	0.46	0.45	0.09	3.17	2.89	1.72	1.71	010
40801		A	Drainage of mouth lesion	2.53	2.43	2.28	1.90	1.66	0.18	5.14	4.99	4.61	4.37	010
40804		A	Removal, foreign body, mouth	1.24	2.56	2.08	2.16	1.70	0.09	3.89	3.41	3.49	3.03	010
40805		A	Removal, foreign body, mouth	2.69	3.05	2.97	2.69	2.70	0.17	5.91	5.83	5.55	5.56	010
40806		A	Incision of lip fold	0.31	0.85	0.74	0.85	0.74	0.02	1.18	1.07	1.18	1.07	000
40808		A	Biopsy of mouth lesion	0.96	2.05	1.74	2.05	1.64	0.07	3.08	2.77	3.08	2.67	010
40810		A	Excision of mouth lesion	1.31	2.66	2.32	2.36	1.93	0.09	4.06	3.72	3.76	3.33	010
40812		A	Excise/repair mouth lesion	2.31	2.87	2.56	2.87	2.36	0.17	5.35	5.04	5.35	4.84	010
40814		A	Excise/repair mouth lesion	3.42	4.04	3.91	4.04	3.47	0.26	7.72	7.59	7.72	7.15	090
40816		A	Excision of mouth lesion	3.67	4.35	4.14	4.35	3.70	0.27	8.29	8.08	8.29	7.64	090
40818		A	Excise oral mucosa for graft	2.41	4.02	3.63	4.02	3.63	0.14	6.57	6.18	6.57	6.18	090
40819		A	Excise lip or cheek fold	2.41	3.50	2.96	3.50	2.79	0.17	6.08	5.54	6.08	5.37	090
40820		A	Treatment of mouth lesion	1.28	2.33	1.89	2.17	1.70	0.08	3.69	3.25	3.53	3.06	010
40830		A	Repair mouth laceration	1.76	2.46	2.03	2.41	1.99	0.14	4.36	3.93	4.31	3.89	010
40831		A	Repair mouth laceration	2.46	2.78	2.61	2.78	2.61	0.21	5.45	5.28	5.45	5.28	010
40840		R	Reconstruction of mouth	8.73	6.16	6.33	6.16	6.33	0.79	15.68	15.85	15.68	15.85	090

[1] CPT codes and descriptions only are copyright 2000 American Medical Association. All Rights Reserved. Applicable FARS/DFARS Apply.
[2] Copyright 1994 American Dental Association. All rights reserved.
[3] + Indicates RVUs are not used for Medicare payment.
[4] PE RVUs = Practice Expense Relative Value Units.

ADDENDUM B.—RELATIVE VALUE UNITS (RVU'S) AND RELATED INFORMATION—Continued

CPT[1]/ HCPCS[2]	MOD	Status	Description	Physician Work RVUs[3]	Fully Implemented Non-Facility PE RVUs	Year 2001 Transitional Non-Facility PE RVUs	Fully Implemented Facility PE RVUs	Year 2001 Transitional Facility PE RVUs	Mal-Practice RVUs	Fully Implemented Non-Facility Total	Year 2001 Transitional Non-Facility Total	Fully Implemented Facility Total	Year 2001 Transitional Facility Total	Global
40842		R	Reconstruction of mouth	8.73	5.98	6.19	5.98	6.19	0.65	15.36	15.57	15.36	15.57	090
40843		R	Reconstruction of mouth	12.10	8.47	8.74	8.47	8.74	0.84	21.41	21.68	21.41	21.68	090
40844		R	Reconstruction of mouth	16.01	8.95	9.87	8.41	9.46	1.63	26.59	27.51	26.05	27.10	090
40845		R	Reconstruction of mouth	18.58	10.53	13.44	10.53	13.44	1.47	30.58	33.49	30.58	33.49	090
40899		C	Mouth surgery procedure	0.00	0.00	0.00	0.00	0.00	0.00	0.00	0.00	0.00	0.00	YYY
41000		A	Drainage of mouth lesion	1.30	2.35	1.97	1.54	1.26	0.09	3.74	3.36	2.93	2.65	010
41005		A	Drainage of mouth lesion	1.26	2.09	1.74	1.24	1.10	0.09	3.44	3.09	2.59	2.45	010
41006		A	Drainage of mouth lesion	3.24	3.51	2.91	3.41	2.83	0.25	7.00	6.40	6.90	6.32	090
41007		A	Drainage of mouth lesion	3.10	3.32	3.28	3.04	3.07	0.22	6.64	6.60	6.36	6.39	090
41008		A	Drainage of mouth lesion	3.37	3.57	2.97	3.18	2.53	0.24	7.18	6.58	6.79	6.14	090
41009		A	Drainage of mouth lesion	3.59	3.59	3.59	3.19	3.29	0.25	7.43	7.43	7.03	7.13	090
41010		A	Incision of tongue fold	1.06	2.90	2.28	2.90	2.28	0.06	4.02	3.40	4.02	3.40	010
41015		A	Drainage of mouth lesion	3.96	4.35	3.50	3.21	2.64	0.29	8.60	7.75	7.46	6.89	090
41016		A	Drainage of mouth lesion	4.07	4.14	4.11	3.39	3.54	0.28	8.49	8.46	7.74	7.89	090
41017		A	Drainage of mouth lesion	4.07	4.02	3.40	3.30	2.86	0.32	8.41	7.79	7.69	7.25	090
41018		A	Drainage of mouth lesion	5.10	4.53	4.47	3.89	3.99	0.35	9.98	9.92	9.34	9.44	090
41100		A	Biopsy of tongue	1.63	2.59	2.16	2.57	2.04	0.12	4.34	3.91	4.32	3.79	010
41105		A	Biopsy of tongue	1.42	2.42	2.10	2.42	1.96	0.10	3.94	3.62	3.94	3.48	010
41108		A	Biopsy of floor of mouth	1.05	2.29	1.95	2.23	1.79	0.08	3.42	3.08	3.36	2.92	010
41110		A	Excision of tongue lesion	1.51	3.03	2.63	2.49	2.05	0.11	4.65	4.25	4.11	3.67	010
41112		A	Excision of tongue lesion	2.73	3.48	3.26	3.48	2.94	0.20	6.41	6.19	6.41	5.87	090
41113		A	Excision of tongue lesion	3.19	3.46	3.52	3.46	3.06	0.23	6.88	6.94	6.88	6.48	090
41114		A	Excision of tongue lesion	8.47	NA	NA	6.36	6.50	0.64	NA	NA	15.47	15.61	090
41115		A	Excision of tongue fold	1.74	2.31	2.22	2.31	2.22	0.13	4.18	4.09	4.18	4.09	010
41116		A	Excision of mouth lesion	2.44	3.36	3.20	3.36	3.20	0.17	5.97	5.81	5.97	5.81	090
41120		A	Partial removal of tongue	9.77	NA	NA	8.68	8.49	0.70	NA	NA	19.15	18.96	090
41130		A	Partial removal of tongue	11.15	NA	NA	9.52	9.60	0.81	NA	NA	21.48	21.56	090
41135		A	Tongue and neck surgery	23.09	NA	NA	15.84	16.85	1.66	NA	NA	40.59	41.60	090
41140		A	Removal of tongue	25.50	NA	NA	18.03	18.65	1.85	NA	NA	45.38	46.00	090
41145		A	Tongue removal, neck surgery	30.06	NA	NA	21.43	22.26	2.11	NA	NA	53.60	54.43	090
41150		A	Tongue, mouth, jaw surgery	23.04	NA	NA	17.05	17.93	1.67	NA	NA	41.76	42.64	090
41153		A	Tongue, mouth, neck surgery	23.77	NA	NA	17.78	20.12	1.71	NA	NA	43.26	45.60	090
41155		A	Tongue, jaw, & neck surgery	27.72	NA	NA	19.81	22.98	2.02	NA	NA	49.55	52.72	090
41250		A	Repair tongue laceration	1.91	2.81	2.40	1.65	1.53	0.15	4.87	4.46	3.71	3.59	010
41251		A	Repair tongue laceration	2.27	2.73	2.61	2.24	2.24	0.18	5.18	5.06	4.69	4.69	010
41252		A	Repair tongue laceration	2.97	3.57	3.32	2.32	2.38	0.23	6.77	6.52	5.52	5.58	010
41500		A	Fixation of tongue	3.71	NA	NA	4.28	4.10	0.26	NA	NA	8.25	8.07	090
41510		A	Tongue to lip surgery	3.42	NA	NA	4.47	4.04	0.24	NA	NA	8.13	7.70	090
41520		A	Reconstruction, tongue fold	2.73	3.16	3.15	3.16	3.15	0.19	6.08	6.07	6.08	6.07	090
41599		C	Tongue and mouth surgery	0.00	0.00	0.00	0.00	0.00	0.00	0.00	0.00	0.00	0.00	YYY
41800		A	Drainage of gum lesion	1.17	1.88	1.60	1.33	1.09	0.09	3.14	2.86	2.59	2.35	010
41805		A	Removal foreign body, gum	1.24	1.90	1.65	1.90	1.65	0.09	3.23	2.98	3.23	2.98	010
41806		A	Removal foreign body,jawbone	2.69	2.56	2.37	2.38	2.01	0.22	5.47	5.28	5.29	4.92	010
41820		R	Excision, gum, each quadrant	0.00	0.00	0.00	0.00	0.00	0.00	0.00	0.00	0.00	0.00	XXX
41821		R	Excision of gum flap	0.00	0.00	0.00	0.00	0.00	0.00	0.00	0.00	0.00	0.00	XXX
41822		R	Excision of gum lesion	2.31	2.84	2.95	0.91	1.51	0.24	5.39	5.50	3.46	4.06	010
41823		R	Excision of gum lesion	3.30	3.71	3.77	2.75	3.05	0.29	7.30	7.36	6.34	6.64	090
41825		A	Excision of gum lesion	1.31	2.34	2.16	2.27	1.91	0.10	3.75	3.57	3.68	3.32	010
41826		A	Excision of gum lesion	2.31	2.60	2.51	2.59	2.23	0.17	5.08	4.99	5.07	4.71	010
41827		A	Excision of gum lesion	3.42	3.55	3.68	3.55	3.17	0.25	7.22	7.35	7.22	6.84	090
41828		R	Excision of gum lesion	3.09	3.00	3.36	2.30	2.83	0.22	6.31	6.67	5.61	6.14	010
41830		R	Removal of gum tissue	3.35	3.15	3.36	3.15	3.36	0.23	6.73	6.94	6.73	6.94	010
41850		R	Treatment of gum lesion	0.00	0.00	0.00	0.00	0.00	0.00	0.00	0.00	0.00	0.00	XXX
41870		R	Gum graft	0.00	0.00	0.00	0.00	0.00	0.00	0.00	0.00	0.00	0.00	XXX
41872		R	Repair gum	2.59	2.67	2.78	2.67	2.78	0.18	5.44	5.55	5.44	5.55	090
41874		R	Repair tooth socket	3.09	2.81	3.03	2.34	2.68	0.23	6.13	6.35	5.66	6.00	090
41899		C	Dental surgery procedure	0.00	0.00	0.00	0.00	0.00	0.00	0.00	0.00	0.00	0.00	YYY
42000		A	Drainage mouth roof lesion	1.23	2.39	1.96	1.68	1.35	0.10	3.72	3.29	3.01	2.68	010
42100		A	Biopsy roof of mouth	1.31	2.36	1.99	2.36	1.88	0.10	3.77	3.40	3.77	3.29	010
42104		A	Excision lesion, mouth roof	1.64	2.43	2.26	2.43	2.04	0.12	4.19	4.02	4.19	3.80	010
42106		A	Excision lesion, mouth roof	2.10	2.60	2.55	2.60	2.25	0.16	4.86	4.81	4.86	4.51	010
42107		A	Excision lesion, mouth roof	4.44	4.02	4.34	4.02	3.68	0.32	8.78	9.10	8.78	8.44	090
42120		A	Remove palate/lesion	6.17	NA	NA	6.01	6.35	0.44	NA	NA	12.62	12.96	090
42140		A	Excision of uvula	1.62	3.68	3.13	3.22	2.78	0.12	5.42	4.87	4.96	4.52	090
42145		A	Repair palate, pharynx/uvula	8.05	NA	NA	7.30	7.88	0.56	NA	NA	15.91	16.49	090
42160		A	Treatment mouth roof lesion	1.80	3.16	2.79	2.62	2.17	0.13	5.09	4.72	4.55	4.10	010
42180		A	Repair palate	2.50	2.74	2.66	2.09	2.18	0.19	5.43	5.35	4.78	4.87	010
42182		A	Repair palate	3.83	3.94	3.90	2.98	3.18	0.27	8.04	8.00	7.08	7.28	010
42200		A	Reconstruct cleft palate	12.00	NA	NA	9.92	9.39	0.97	NA	NA	22.89	22.36	090
42205		A	Reconstruct cleft palate	9.59	NA	NA	7.65	8.60	0.82	NA	NA	18.06	19.01	090
42210		A	Reconstruct cleft palate	14.50	NA	NA	7.94	9.35	1.24	NA	NA	23.68	25.09	090
42215		A	Reconstruct cleft palate	8.82	NA	NA	7.36	7.60	0.96	NA	NA	17.14	17.38	090
42220		A	Reconstruct cleft palate	7.02	NA	NA	5.69	5.73	0.41	NA	NA	13.12	13.16	090
42225		A	Reconstruct cleft palate	9.54	NA	NA	8.87	8.53	0.75	NA	NA	19.16	18.82	090
42226		A	Lengthening of palate	10.01	NA	NA	9.15	9.00	0.73	NA	NA	19.89	19.74	090
42227		A	Lengthening of palate	9.52	NA	NA	6.69	7.03	0.70	NA	NA	16.91	17.25	090
42235		A	Repair palate	7.87	NA	NA	5.75	5.82	0.49	NA	NA	14.11	14.18	090
42260		A	Repair nose to lip fistula	9.80	7.33	6.58	7.33	6.58	0.85	17.98	17.23	17.98	17.23	090
42280		A	Preparation, palate mold	1.54	1.41	1.60	0.81	1.15	0.12	3.07	3.26	2.47	2.81	010
42281		A	Insertion, palate prosthesis	1.93	2.01	1.91	1.03	1.17	0.14	4.08	3.98	3.10	3.24	010
42299		C	Palate/uvula surgery	0.00	0.00	0.00	0.00	0.00	0.00	0.00	0.00	0.00	0.00	YYY
42300		A	Drainage of salivary gland	1.93	2.56	2.18	1.76	1.45	0.15	4.64	4.26	3.84	3.53	010
42305		A	Drainage of salivary gland	6.07	NA	NA	5.16	4.46	0.46	NA	NA	11.69	10.99	090

[1] CPT codes and descriptions only are copyright 2000 American Medical Association. All Rights Reserved. Applicable FARS/DFARS Apply.
[2] Copyright 1994 American Dental Association. All rights reserved.
[3] + Indicates RVUs are not used for Medicare payment.
[4] PE RVUs = Practice Expense Relative Value Units.

ADDENDUM B.—RELATIVE VALUE UNITS (RVU'S) AND RELATED INFORMATION—Continued

CPT[1]/ HCPCS[2]	MOD	Status	Description	Physician Work RVUs[3]	Fully Implemented Non-Facility PE RVUs	Year 2001 Transitional Non-Facility PE RVUs	Fully Implemented Facility PE RVUs	Year 2001 Transitional Facility PE RVUs	Mal-Practice RVUs	Fully Implemented Non-Facility Total	Year 2001 Transitional Non-Facility Total	Fully Implemented Facility Total	Year 2001 Transitional Facility Total	Global
42310		A	Drainage of salivary gland	1.56	2.24	1.96	1.67	1.39	0.11	3.91	3.63	3.34	3.06	010
42320		A	Drainage of salivary gland	2.35	2.79	2.59	2.12	2.09	0.17	5.31	5.11	4.64	4.61	010
42325		A	Create salivary cyst drain	2.75	3.30	3.05	1.20	1.48	0.17	6.22	5.97	4.12	4.40	090
42326		A	Create salivary cyst drain	3.78	3.28	3.59	2.10	2.70	0.34	7.40	7.71	6.22	6.82	090
42330		A	Removal of salivary stone	2.21	2.70	2.32	1.20	1.05	0.16	5.07	4.69	3.57	3.42	010
42335		A	Removal of salivary stone	3.31	3.57	3.35	3.57	3.01	0.23	7.11	6.89	7.11	6.55	090
42340		A	Removal of salivary stone	4.60	4.57	4.58	4.57	4.01	0.34	9.51	9.52	9.51	8.95	090
42400		A	Biopsy of salivary gland	0.78	2.34	1.97	0.39	0.40	0.06	3.18	2.81	1.23	1.24	000
42405		A	Biopsy of salivary gland	3.29	3.35	2.93	3.28	2.67	0.24	6.88	6.46	6.81	6.20	010
42408		A	Excision of salivary cyst	4.54	4.61	4.34	4.61	4.34	0.34	9.49	9.22	9.49	9.22	090
42409		A	Drainage of salivary cyst	2.81	3.44	3.34	3.44	3.34	0.20	6.45	6.35	6.45	6.35	090
42410		A	Excise parotid gland/lesion	9.34	NA	NA	7.78	7.45	0.77	NA	NA	17.89	17.56	090
42415		A	Excise parotid gland/lesion	16.89	NA	NA	12.40	12.74	1.26	NA	NA	30.55	30.89	090
42420		A	Excise parotid gland/lesion	19.59	NA	NA	13.97	14.50	1.45	NA	NA	35.01	35.54	090
42425		A	Excise parotid gland/lesion	13.02	NA	NA	10.26	10.71	0.98	NA	NA	24.26	24.71	090
42426		A	Excise parotid gland/lesion	21.26	NA	NA	14.79	17.44	1.57	NA	NA	37.62	40.27	090
42440		A	Excise submaxillary gland	6.97	NA	NA	5.88	6.49	0.51	NA	NA	13.36	13.97	090
42450		A	Excise sublingual gland	4.62	4.92	4.62	4.91	4.61	0.34	9.88	9.58	9.87	9.57	090
42500		A	Repair salivary duct	4.30	4.67	4.75	4.67	4.75	0.30	9.27	9.35	9.27	9.35	090
42505		A	Repair salivary duct	6.18	5.33	5.84	5.33	5.84	0.44	11.95	12.46	11.95	12.46	090
42507		A	Parotid duct diversion	6.11	NA	NA	5.85	5.65	0.66	NA	NA	12.62	12.42	090
42508		A	Parotid duct diversion	9.10	NA	NA	7.96	8.04	0.64	NA	NA	17.70	17.78	090
42509		A	Parotid duct diversion	11.54	NA	NA	7.66	7.73	1.24	NA	NA	20.44	20.51	090
42510		A	Parotid duct diversion	8.15	NA	NA	7.44	7.66	0.57	NA	NA	16.16	16.38	090
42550		A	Injection for salivary x-ray	1.25	12.21	9.28	0.44	0.45	0.06	13.52	10.59	1.75	1.76	000
42600		A	Closure of salivary fistula	4.82	6.02	5.57	5.54	5.21	0.34	11.18	10.73	10.70	10.37	090
42650		A	Dilation of salivary duct	0.77	1.06	0.90	0.42	0.37	0.06	1.89	1.73	1.25	1.20	000
42660		A	Dilation of salivary duct	1.13	1.15	1.00	1.15	0.93	0.07	2.35	2.20	2.35	2.13	000
42665		A	Ligation of salivary duct	2.53	3.73	3.35	3.69	3.32	0.17	6.43	6.05	6.39	6.02	090
42699		C	Salivary surgery procedure	0.00	0.00	0.00	0.00	0.00	0.00	0.00	0.00	0.00	0.00	YYY
42700		A	Drainage of tonsil abscess	1.62	3.09	2.55	1.80	1.47	0.12	4.83	4.29	3.54	3.21	010
42720		A	Drainage of throat abscess	5.42	4.73	4.06	4.67	4.02	0.39	10.54	9.87	10.48	9.83	010
42725		A	Drainage of throat abscess	10.72	NA	NA	8.37	7.49	0.80	NA	NA	19.89	19.01	090
42800		A	Biopsy of throat	1.39	2.91	2.38	2.50	1.98	0.10	4.40	3.87	3.99	3.47	010
42802		A	Biopsy of throat	1.54	3.01	2.54	2.60	2.23	0.11	4.66	4.19	4.25	3.88	010
42804		A	Biopsy of upper nose/throat	1.24	2.87	2.45	2.45	2.13	0.09	4.20	3.78	3.78	3.46	010
42806		A	Biopsy of upper nose/throat	1.58	3.29	2.85	2.63	2.35	0.12	4.99	4.55	4.33	4.05	010
42808		A	Excise pharynx lesion	2.30	4.66	4.18	3.04	2.96	0.17	7.13	6.65	5.51	5.43	010
42809		A	Remove pharynx foreign body	1.81	3.34	2.73	1.67	1.48	0.13	5.28	4.67	3.61	3.42	010
42810		A	Excision of neck cyst	3.25	5.28	4.81	4.45	4.19	0.25	8.78	8.31	7.95	7.69	090
42815		A	Excision of neck cyst	7.07	NA	NA	6.49	7.03	0.53	NA	NA	14.09	14.63	090
42820		A	Remove tonsils and adenoids	3.91	NA	NA	3.89	3.77	0.28	NA	NA	8.08	7.96	090
42821		A	Remove tonsils and adenoids	4.29	NA	NA	4.13	4.17	0.30	NA	NA	8.72	8.76	090
42825		A	Removal of tonsils	3.42	NA	NA	3.57	3.40	0.24	NA	NA	7.23	7.06	090
42826		A	Removal of tonsils	3.38	NA	NA	3.61	3.72	0.23	NA	NA	7.22	7.33	090
42830		A	Removal of adenoids	2.57	NA	NA	2.26	2.20	0.18	NA	NA	5.01	4.95	090
42831		A	Removal of adenoids	2.71	NA	NA	2.49	2.51	0.19	NA	NA	5.39	5.41	090
42835		A	Removal of adenoids	2.30	NA	NA	2.46	2.35	0.17	NA	NA	4.93	4.82	090
42836		A	Removal of adenoids	3.18	NA	NA	3.58	3.44	0.22	NA	NA	6.98	6.84	090
42842		A	Extensive surgery of throat	8.76	NA	NA	7.71	7.60	0.61	NA	NA	17.08	16.97	090
42844		A	Extensive surgery of throat	14.31	NA	NA	11.31	11.43	1.04	NA	NA	26.66	26.78	090
42845		A	Extensive surgery of throat	24.29	NA	NA	17.47	18.16	1.76	NA	NA	43.52	44.21	090
42860		A	Excision of tonsil tags	2.22	NA	NA	3.01	2.77	0.16	NA	NA	5.39	5.15	090
42870		A	Excision of lingual tonsil	5.40	NA	NA	5.83	5.00	0.38	NA	NA	11.61	10.78	090
42890		A	Partial removal of pharynx	12.94	NA	NA	10.62	10.41	0.91	NA	NA	24.47	24.26	090
42892		A	Revision of pharyngeal walls	15.83	NA	NA	12.15	12.08	1.14	NA	NA	29.12	29.05	090
42894		A	Revision of pharyngeal walls	22.88	NA	NA	16.83	16.98	1.64	NA	NA	41.35	41.50	090
42900		A	Repair throat wound	5.25	NA	NA	3.73	3.95	0.39	NA	NA	9.37	9.59	010
42950		A	Reconstruction of throat	8.10	NA	NA	7.40	7.97	0.58	NA	NA	16.08	16.65	090
42953		A	Repair throat, esophagus	8.96	NA	NA	8.96	8.44	0.73	NA	NA	18.65	18.13	090
42955		A	Surgical opening of throat	7.39	NA	NA	6.48	5.76	0.63	NA	NA	14.50	13.78	090
42960		A	Control throat bleeding	2.33	NA	NA	2.08	1.85	0.17	NA	NA	4.58	4.35	010
42961		A	Control throat bleeding	5.59	NA	NA	5.22	4.39	0.40	NA	NA	11.21	10.38	090
42962		A	Control throat bleeding	7.14	NA	NA	6.25	6.31	0.51	NA	NA	13.90	13.96	090
42970		A	Control nose/throat bleeding	5.43	NA	NA	3.77	3.11	0.37	NA	NA	9.57	8.91	090
42971		A	Control nose/throat bleeding	6.21	NA	NA	5.69	5.06	0.45	NA	NA	12.35	11.72	090
42972		A	Control nose/throat bleeding	7.20	NA	NA	5.29	5.20	0.54	NA	NA	13.03	12.94	090
42999		C	Throat surgery procedure	0.00	0.00	0.00	0.00	0.00	0.00	0.00	0.00	0.00	0.00	YYY
43020		A	Incision of esophagus	8.09	NA	NA	6.75	6.85	0.70	NA	NA	15.54	15.64	090
43030		A	Throat muscle surgery	7.69	NA	NA	6.94	7.50	0.60	NA	NA	15.23	15.79	090
43045		A	Incision of esophagus	20.12	NA	NA	12.66	12.87	2.15	NA	NA	34.93	35.14	090
43100		A	Excision of esophagus lesion	9.19	NA	NA	7.55	7.34	0.79	NA	NA	17.53	17.32	090
43101		A	Excision of esophagus lesion	16.24	NA	NA	9.82	9.94	1.81	NA	NA	27.87	27.99	090
43107		A	Removal of esophagus	28.79	NA	NA	16.92	18.80	3.29	NA	NA	49.00	50.88	090
43108		A	Removal of esophagus	34.19	NA	NA	17.66	20.10	3.78	NA	NA	55.63	58.07	090
43112		A	Removal of esophagus	31.22	NA	NA	18.18	19.51	3.67	NA	NA	53.07	54.40	090
43113		A	Removal of esophagus	35.27	NA	NA	19.43	21.43	4.33	NA	NA	59.03	61.03	090
43116		A	Partial removal of esophagus	31.22	NA	NA	20.74	22.41	2.62	NA	NA	54.58	56.25	090
43117		A	Partial removal of esophagus	30.02	NA	NA	17.49	19.97	3.51	NA	NA	51.02	53.50	090
43118		A	Partial removal of esophagus	33.20	NA	NA	18.27	20.56	3.56	NA	NA	55.03	57.32	090
43121		A	Partial removal of esophagus	29.19	NA	NA	17.45	18.88	3.44	NA	NA	50.08	51.51	090
43122		A	Parital removal of esophagus	29.11	NA	NA	16.18	17.93	3.27	NA	NA	48.56	50.31	090
43123		A	Partial removal of esophagus	33.20	NA	NA	19.65	21.59	3.96	NA	NA	56.81	58.75	090

[1] CPT codes and descriptions only are copyright 2000 American Medical Association. All Rights Reserved. Applicable FARS/DFARS Apply.
[2] Copyright 1994 American Dental Association. All rights reserved.
[3] + Indicates RVUs are not used for Medicare payment.
[4] PE RVUs = Practice Expense Relative Value Units.

ADDENDUM B.—RELATIVE VALUE UNITS (RVU'S) AND RELATED INFORMATION—Continued

CPT[1]/ HCPCS[2]	MOD	Status	Description	Physician Work RVUs[3]	Fully Implemented Non-Facility PE RVUs	Year 2001 Transitional Non-Facility PE RVUs	Fully Implemented Facility PE RVUs	Year 2001 Transitional Facility PE RVUs	Mal-Practice RVUs	Fully Implemented Non-Facility Total	Year 2001 Transitional Non-Facility Total	Fully Implemented Facility Total	Year 2001 Transitional Facility Total	Global
43124		A	Removal of esophagus	27.32	NA	NA	17.52	19.25	2.95	NA	NA	47.79	49.52	090
43130		A	Removal of esophagus pouch	11.75	NA	NA	9.45	9.94	1.06	NA	NA	22.26	22.75	090
43135		A	Removal of esophagus pouch	16.10	NA	NA	11.71	11.96	1.85	NA	NA	29.66	29.91	090
43200		A	Esophagus endoscopy	1.59	6.74	5.61	1.18	1.36	0.11	8.44	7.31	2.88	3.06	000
43202		A	Esophagus endoscopy, biopsy	1.89	5.35	4.67	1.13	1.41	0.12	7.36	6.68	3.14	3.42	000
43204		A	Esophagus endoscopy & inject	3.77	NA	NA	1.64	2.36	0.18	NA	NA	5.59	6.31	000
43205		A	Esophagus endoscopy/ligation	3.79	NA	NA	1.65	1.97	0.17	NA	NA	5.61	5.93	000
43215		A	Esophagus endoscopy	2.60	NA	NA	1.25	1.71	0.17	NA	NA	4.02	4.48	000
43216		A	Esophagus endoscopy/lesion	2.40	NA	NA	1.17	1.60	0.15	NA	NA	3.72	4.15	000
43217		A	Esophagus endoscopy	2.90	NA	NA	1.33	1.86	0.17	NA	NA	4.40	4.93	000
43219		A	Esophagus endoscopy	2.80	NA	NA	1.41	1.89	0.16	NA	NA	4.37	4.85	000
43220		A	Esoph endoscopy, dilation	2.10	NA	NA	1.09	1.45	0.12	NA	NA	3.31	3.67	000
43226		A	Esoph endoscopy, dilation	2.34	NA	NA	1.16	1.57	0.12	NA	NA	3.62	4.03	000
43227		A	Esoph endoscopy, repair	3.60	NA	NA	1.59	2.27	0.18	NA	NA	5.37	6.05	000
43228		A	Esoph endoscopy, ablation	3.77	NA	NA	1.77	2.45	0.25	NA	NA	5.79	6.47	000
43231		A	Esoph endoscopy w/us exam	4.09	NA	NA	1.84	1.84	0.24	NA	NA	6.17	6.17	000
43232		A	Esoph endoscopy w/us fn bx	4.71	NA	NA	2.18	2.18	0.28	NA	NA	7.17	7.17	000
43234		A	Upper GI endoscopy, exam	2.01	3.65	3.44	1.04	1.38	0.13	5.79	5.58	3.18	3.52	000
43235		A	Uppr gi endoscopy, diagnosis	2.39	4.79	4.43	1.17	1.59	0.13	7.31	6.95	3.69	4.11	000
43239		A	Upper GI endoscopy, biopsy	2.69	4.96	4.65	1.28	1.76	0.14	7.79	7.48	4.11	4.59	000
43240		A	Esoph endoscope w/drain cyst	7.39	NA	NA	3.05	3.05	0.45	NA	NA	10.89	10.89	000
43241		A	Upper GI endoscopy with tube	2.59	NA	NA	1.22	1.69	0.14	NA	NA	3.95	4.42	000
43242		A	Uppr gi endoscopy w/us fn bx	5.51	1.98	1.98	1.98	1.98	0.34	7.83	7.83	7.83	7.83	000
43243		A	Upper gi endoscopy & inject	4.57	NA	NA	1.93	2.81	0.21	NA	NA	6.71	7.59	000
43244		A	Upper GI endoscopy/ligation	4.59	NA	NA	1.93	2.39	0.21	NA	NA	6.73	7.19	000
43245		A	Operative upper GI endoscopy	3.39	NA	NA	1.50	2.14	0.18	NA	NA	5.07	5.71	000
43246		A	Place gastrostomy tube	4.33	NA	NA	1.80	2.64	0.24	NA	NA	6.37	7.21	000
43247		A	Operative upper GI endoscopy	3.39	NA	NA	1.50	2.14	0.17	NA	NA	5.06	5.70	000
43248		A	Uppr gi endoscopy/guide wire	3.15	NA	NA	1.42	2.01	0.15	NA	NA	4.72	5.31	000
43249		A	Esoph endoscopy, dilation	2.90	NA	NA	1.33	1.86	0.15	NA	NA	4.38	4.91	000
43250		A	Upper GI endoscopy/tumor	3.20	NA	NA	1.43	2.03	0.17	NA	NA	4.80	5.40	000
43251		A	Operative upper GI endoscopy	3.70	NA	NA	1.61	2.31	0.19	NA	NA	5.50	6.20	000
43255		A	Operative upper GI endoscopy	4.40	NA	NA	1.76	2.63	0.20	NA	NA	6.36	7.23	000
43256		A	Uppr gi endoscopy w stent	4.35	1.56	1.56	1.56	1.56	0.26	6.17	6.17	6.17	6.17	000
43258		A	Operative upper GI endoscopy	4.55	NA	NA	1.92	2.80	0.22	NA	NA	6.69	7.57	000
43259		A	Endoscopic ultrasound exam	4.89	NA	NA	2.12	2.68	0.22	NA	NA	7.23	7.79	000
43260		A	Endo cholangiopancreatograph	5.96	NA	NA	2.42	3.44	0.27	NA	NA	8.65	9.67	000
43261		A	Endo cholangiopancreatograph	6.27	NA	NA	2.53	3.52	0.29	NA	NA	9.09	10.08	000
43262		A	Endo cholangiopancreatograph	7.39	NA	NA	2.94	4.41	0.34	NA	NA	10.67	12.14	000
43263		A	Endo cholangiopancreatograph	6.19	NA	NA	2.51	3.47	0.28	NA	NA	8.98	9.94	000
43264		A	Endo cholangiopancreatograph	8.90	NA	NA	3.48	5.03	0.41	NA	NA	12.79	14.34	000
43265		A	Endo cholangiopancreatograph	8.90	NA	NA	3.48	4.46	0.42	NA	NA	12.80	13.78	000
43267		A	Endo cholangiopancreatograph	7.39	NA	NA	2.95	4.22	0.34	NA	NA	10.68	11.95	000
43268		A	Endo cholangiopancreatograph	7.39	NA	NA	2.94	4.41	0.34	NA	NA	10.67	12.14	000
43269		A	Endo cholangiopancreatograph	6.04	NA	NA	2.45	3.64	0.28	NA	NA	8.77	9.96	000
43271		A	Endo cholangiopancreatograph	7.39	NA	NA	2.93	4.27	0.34	NA	NA	10.66	12.00	000
43272		A	Endo cholangiopancreatograph	7.39	NA	NA	2.94	3.73	0.34	NA	NA	10.67	11.46	000
43280		A	Laparoscopy, fundoplasty	17.25	NA	NA	8.77	9.80	1.76	NA	NA	27.78	28.81	090
43289		C	Laparoscope proc, esoph	0.00	0.00	0.00	0.00	0.00	0.00	0.00	0.00	0.00	0.00	YYY
43300		A	Repair of esophagus	9.14	NA	NA	7.63	8.45	0.85	NA	NA	17.62	18.44	090
43305		A	Repair esophagus and fistula	17.39	NA	NA	13.14	13.58	1.36	NA	NA	31.89	32.33	090
43310		A	Repair of esophagus	27.47	NA	NA	18.38	18.40	3.18	NA	NA	49.03	49.05	090
43312		A	Repair esophagus and fistula	30.50	NA	NA	23.31	21.21	3.38	NA	NA	57.19	55.09	090
43320		A	Fuse esophagus & stomach	16.07	NA	NA	10.25	10.86	1.59	NA	NA	27.91	28.52	090
43324		A	Revise esophagus & stomach	16.58	NA	NA	8.80	9.82	1.72	NA	NA	27.10	28.12	090
43325		A	Revise esophagus & stomach	16.17	NA	NA	9.21	10.06	1.65	NA	NA	27.03	27.88	090
43326		A	Revise esophagus & stomach	15.91	NA	NA	10.94	10.25	1.84	NA	NA	28.69	28.00	090
43330		A	Repair of esophagus	15.94	NA	NA	8.76	9.65	1.52	NA	NA	26.22	27.11	090
43331		A	Repair of esophagus	16.23	NA	NA	12.23	13.06	1.93	NA	NA	30.39	31.22	090
43340		A	Fuse esophagus & intestine	15.81	NA	NA	10.07	10.93	1.53	NA	NA	27.41	28.27	090
43341		A	Fuse esophagus & intestine	16.81	NA	NA	15.42	14.25	2.14	NA	NA	34.37	33.20	090
43350		A	Surgical opening, esophagus	12.72	NA	NA	10.66	10.13	1.15	NA	NA	24.53	24.00	090
43351		A	Surgical opening, esophagus	14.79	NA	NA	9.66	9.63	1.51	NA	NA	25.96	25.93	090
43352		A	Surgical opening, esophagus	12.30	NA	NA	9.53	9.55	1.28	NA	NA	23.11	23.13	090
43360		A	Gastrointestinal repair	28.78	NA	NA	16.55	18.21	3.00	NA	NA	48.33	49.99	090
43361		A	Gastrointestinal repair	32.65	NA	NA	18.51	20.74	3.52	NA	NA	54.68	56.91	090
43400		A	Ligate esophagus veins	17.09	NA	NA	8.66	9.43	0.99	NA	NA	26.74	27.51	090
43401		A	Esophagus surgery for veins	17.81	NA	NA	8.93	9.30	1.73	NA	NA	28.47	28.84	090
43405		A	Ligate/staple esophagus	16.13	NA	NA	9.39	10.93	1.63	NA	NA	27.15	28.69	090
43410		A	Repair esophagus wound	10.86	NA	NA	9.11	9.25	1.15	NA	NA	21.12	21.26	090
43415		A	Repair esophagus wound	17.06	NA	NA	11.23	11.88	1.92	NA	NA	30.21	30.86	090
43420		A	Repair esophagus opening	11.57	NA	NA	8.87	8.25	0.86	NA	NA	21.30	20.68	090
43425		A	Repair esophagus opening	16.95	NA	NA	11.97	11.68	2.03	NA	NA	30.95	30.66	090
43450		A	Dilate esophagus	1.38	1.26	1.13	0.61	0.64	0.07	2.71	2.58	2.06	2.09	000
43453		A	Dilate esophagus	1.51	NA	NA	0.65	0.90	0.08	NA	NA	2.24	2.49	000
43456		A	Dilate esophagus	2.57	NA	NA	1.05	1.46	0.14	NA	NA	3.76	4.17	000
43458		A	Dilate esophagus	3.06	NA	NA	1.24	1.34	0.17	NA	NA	4.47	4.57	000
43460		A	Pressure treatment esophagus	3.80	NA	NA	1.51	1.59	0.21	NA	NA	5.52	5.60	000
43496		C	Free jejunum flap, microvasc	0.00	0.00	0.00	0.00	0.00	0.00	0.00	0.00	0.00	0.00	090
43499		C	Esophagus surgery procedure	0.00	0.00	0.00	0.00	0.00	0.00	0.00	0.00	0.00	0.00	YYY
43500		A	Surgical opening of stomach	8.44	NA	NA	4.38	4.95	0.84	NA	NA	13.66	14.23	090
43501		A	Surgical repair of stomach	15.31	NA	NA	7.32	7.82	1.55	NA	NA	24.18	24.68	090
43502		A	Surgical repair of stomach	17.67	NA	NA	8.36	8.60	1.83	NA	NA	27.86	28.10	090

[1] CPT codes and descriptions only are copyright 2000 American Medical Association. All Rights Reserved. Applicable FARS/DFARS Apply.
[2] Copyright 1994 American Dental Association. All rights reserved.
[3] + Indicates RVUs are not used for Medicare payment.
[4] PE RVUs = Practice Expense Relative Value Units.

ADDENDUM B.—RELATIVE VALUE UNITS (RVU'S) AND RELATED INFORMATION—Continued

CPT[1]/ HCPCS[2]	MOD	Status	Description	Physician Work RVUs[3]	Fully Implemented Non-Facility PE RVUs	Year 2001 Transitional Non-Facility PE RVUs	Fully Implemented Facility PE RVUs	Year 2001 Transitional Facility PE RVUs	Mal-Practice RVUs	Fully Implemented Non-Facility Total	Year 2001 Transitional Non-Facility Total	Fully Implemented Facility Total	Year 2001 Transitional Facility Total	Global
43510		A	Surgical opening of stomach	9.99	NA	NA	6.56	7.17	0.90	NA	NA	17.45	18.06	090
43520		A	Incision of pyloric muscle	7.63	NA	NA	5.72	5.51	0.84	NA	NA	14.19	13.98	090
43600		A	Biopsy of stomach	1.91	NA	NA	1.00	0.89	0.11	NA	NA	3.02	2.91	000
43605		A	Biopsy of stomach	9.15	NA	NA	4.59	5.05	0.93	NA	NA	14.67	15.13	090
43610		A	Excision of stomach lesion	11.15	NA	NA	5.74	6.52	1.14	NA	NA	18.03	18.81	090
43611		A	Excision of stomach lesion	13.63	NA	NA	6.78	7.30	1.38	NA	NA	21.79	22.31	090
43620		A	Removal of stomach	22.54	NA	NA	10.83	12.30	2.29	NA	NA	35.66	37.13	090
43621		A	Removal of stomach	23.06	NA	NA	10.89	12.34	2.36	NA	NA	36.31	37.76	090
43622		A	Removal of stomach	24.41	NA	NA	11.37	12.70	2.48	NA	NA	38.26	39.59	090
43631		A	Removal of stomach, partial	19.66	NA	NA	8.97	10.10	1.99	NA	NA	30.62	31.75	090
43632		A	Removal of stomach, partial	19.66	NA	NA	8.97	10.10	2.00	NA	NA	30.63	31.76	090
43633		A	Removal of stomach, partial	20.10	NA	NA	9.15	10.23	2.05	NA	NA	31.30	32.38	090
43634		A	Removal of stomach, partial	21.86	NA	NA	9.84	13.03	2.18	NA	NA	33.88	37.07	090
43635		A	Removal of stomach, partial	2.06	NA	NA	0.78	0.88	0.21	NA	NA	3.05	3.15	ZZZ
43638		A	Removal of stomach, partial	21.76	NA	NA	9.96	10.93	2.24	NA	NA	33.96	34.93	090
43639		A	Removal of stomach, partial	22.25	NA	NA	10.30	11.19	2.31	NA	NA	34.86	35.75	090
43640		A	Vagotomy & pylorus repair	14.81	NA	NA	7.14	8.16	1.51	NA	NA	23.46	24.48	090
43641		A	Vagotomy & pylorus repair	15.03	NA	NA	7.24	8.24	1.53	NA	NA	23.80	24.80	090
43651		A	Laparoscopy, vagus nerve	10.15	NA	NA	4.89	5.04	1.03	NA	NA	16.07	16.22	090
43652		A	Laparoscopy, vagus nerve	12.15	NA	NA	5.65	5.89	1.25	NA	NA	19.05	19.29	090
43653		A	Laparoscopy, gastrostomy	7.73	NA	NA	4.37	4.96	0.78	NA	NA	12.88	13.47	090
43659		C	Laparoscope proc, stom	0.00	0.00	0.00	0.00	0.00	0.00	0.00	0.00	0.00	0.00	YYY
43750		A	Place gastrostomy tube	4.49	NA	NA	2.61	3.14	0.33	NA	NA	7.43	7.96	010
43752		B	Nasal/orogastric w/stent	0.00	0.00	0.00	0.00	0.00	0.00	0.00	0.00	0.00	0.00	XXX
43760		A	Change gastrostomy tube	1.10	1.34	1.19	0.46	0.53	0.07	2.51	2.36	1.63	1.70	000
43761		A	Reposition gastrostomy tube	2.01	NA	NA	0.83	0.91	0.10	NA	NA	2.94	3.02	000
43800		A	Reconstruction of pylorus	10.46	NA	NA	5.64	6.09	1.07	NA	NA	17.17	17.62	090
43810		A	Fusion of stomach and bowel	11.19	NA	NA	5.80	6.42	1.10	NA	NA	18.09	18.71	090
43820		A	Fusion of stomach and bowel	11.74	NA	NA	5.98	6.74	1.18	NA	NA	18.90	19.66	090
43825		A	Fusion of stomach and bowel	14.68	NA	NA	7.02	8.27	1.50	NA	NA	23.20	24.45	090
43830		A	Place gastrostomy tube	7.28	NA	NA	4.25	4.87	0.69	NA	NA	12.22	12.84	090
43831		A	Place gastrostomy tube	7.84	NA	NA	4.41	4.72	0.81	NA	NA	13.06	13.37	090
43832		A	Place gastrostomy tube	11.92	NA	NA	6.37	6.94	1.13	NA	NA	19.42	19.99	090
43840		A	Repair of stomach lesion	11.89	NA	NA	6.02	6.64	1.20	NA	NA	19.11	19.73	090
43842		A	Gastroplasty for obesity	14.71	NA	NA	10.07	11.28	1.51	NA	NA	26.29	27.50	090
43843		A	Gastroplasty for obesity	14.85	NA	NA	9.76	11.04	1.53	NA	NA	26.14	27.42	090
43846		A	Gastric bypass for obesity	19.15	NA	NA	11.70	12.79	1.96	NA	NA	32.81	33.90	090
43847		A	Gastric bypass for obesity	21.44	NA	NA	13.22	13.93	2.14	NA	NA	36.80	37.51	090
43848		A	Revision gastroplasty	23.41	NA	NA	14.07	14.57	2.39	NA	NA	39.87	40.37	090
43850		A	Revise stomach-bowel fusion	19.69	NA	NA	8.94	9.86	1.97	NA	NA	30.60	31.52	090
43855		A	Revise stomach-bowel fusion	20.83	NA	NA	9.60	10.03	2.01	NA	NA	32.44	32.87	090
43860		A	Revise stomach-bowel fusion	19.91	NA	NA	9.09	9.93	2.03	NA	NA	31.03	31.87	090
43865		A	Revise stomach-bowel fusion	21.12	NA	NA	9.57	10.81	2.15	NA	NA	32.84	34.08	090
43870		A	Repair stomach opening	7.40	NA	NA	4.37	4.84	0.71	NA	NA	12.48	12.95	090
43880		A	Repair stomach-bowel fistula	19.63	NA	NA	9.42	9.30	1.94	NA	NA	30.99	30.87	090
43999		C	Stomach surgery procedure	0.00	0.00	0.00	0.00	0.00	0.00	0.00	0.00	0.00	0.00	YYY
44005		A	Freeing of bowel adhesion	13.84	NA	NA	6.71	7.28	1.39	NA	NA	21.94	22.51	090
44010		A	Incision of small bowel	10.68	NA	NA	5.93	6.32	1.05	NA	NA	17.66	18.05	090
44015		A	Insert needle cath bowel	2.62	NA	NA	0.99	1.53	0.25	NA	NA	3.86	4.40	ZZZ
44020		A	Exploration of small bowel	11.93	NA	NA	5.97	6.60	1.20	NA	NA	19.10	19.73	090
44021		A	Decompress small bowel	12.01	NA	NA	6.37	6.68	1.18	NA	NA	19.56	19.87	090
44025		A	Incision of large bowel	12.18	NA	NA	6.08	6.66	1.21	NA	NA	19.47	20.05	090
44050		A	Reduce bowel obstruction	11.40	NA	NA	5.77	6.44	1.15	NA	NA	18.32	18.99	090
44055		A	Correct malrotation of bowel	13.14	NA	NA	6.43	6.90	1.32	NA	NA	20.89	21.36	090
44100		A	Biopsy of bowel	2.01	NA	NA	1.04	1.16	0.12	NA	NA	3.17	3.29	000
44110		A	Excision of bowel lesion(s)	10.07	NA	NA	5.29	6.05	1.00	NA	NA	16.36	17.12	090
44111		A	Excision of bowel lesion(s)	12.19	NA	NA	6.62	7.59	1.22	NA	NA	20.03	21.00	090
44120		A	Removal of small intestine	14.50	NA	NA	6.94	7.77	1.46	NA	NA	22.90	23.73	090
44121		A	Removal of small intestine	4.45	NA	NA	1.69	1.90	0.45	NA	NA	6.59	6.80	ZZZ
44125		A	Removal of small intestine	14.96	NA	NA	7.10	8.24	1.49	NA	NA	23.55	24.69	090
44130		A	Bowel to bowel fusion	12.36	NA	NA	6.13	6.95	1.23	NA	NA	19.72	20.54	090
44132		N	Enterectomy, cadaver donor	0.00	0.00	0.00	0.00	0.00	0.00	0.00	0.00	0.00	0.00	XXX
44133		N	Enterectomy, live donor	0.00	0.00	0.00	0.00	0.00	0.00	0.00	0.00	0.00	0.00	XXX
44135		N	Intestine transplnt, cadaver	0.00	0.00	0.00	0.00	0.00	0.00	0.00	0.00	0.00	0.00	XXX
44136		N	Intestine transplant, live	0.00	0.00	0.00	0.00	0.00	0.00	0.00	0.00	0.00	0.00	XXX
44139		A	Mobilization of colon	2.23	NA	NA	0.85	0.96	0.21	NA	NA	3.29	3.40	ZZZ
44140		A	Partial removal of colon	18.35	NA	NA	8.82	9.70	1.83	NA	NA	29.00	29.88	090
44141		A	Partial removal of colon	19.51	NA	NA	11.83	12.09	1.95	NA	NA	33.29	33.55	090
44143		A	Partial removal of colon	20.17	NA	NA	12.04	12.36	2.02	NA	NA	34.23	34.55	090
44144		A	Partial removal of colon	18.89	NA	NA	10.80	11.37	1.89	NA	NA	31.58	32.15	090
44145		A	Partial removal of colon	23.18	NA	NA	11.03	11.87	2.22	NA	NA	36.43	37.27	090
44146		A	Partial removal of colon	24.16	NA	NA	13.79	14.41	2.20	NA	NA	40.15	40.77	090
44147		A	Partial removal of colon	18.17	NA	NA	9.52	11.30	1.74	NA	NA	29.43	31.21	090
44150		A	Removal of colon	21.01	NA	NA	12.92	13.72	2.05	NA	NA	35.98	36.78	090
44151		A	Removal of colon/ileostomy	20.04	NA	NA	12.35	12.03	1.97	NA	NA	34.36	34.04	090
44152		A	Removal of colon/ileostomy	24.41	NA	NA	15.55	15.85	2.36	NA	NA	42.32	42.62	090
44153		A	Removal of colon/ileostomy	26.83	NA	NA	15.31	16.73	2.33	NA	NA	44.47	45.89	090
44155		A	Removal of colon/ileostomy	24.44	NA	NA	14.08	15.08	2.26	NA	NA	40.78	41.78	090
44156		A	Removal of colon/ileostomy	23.01	NA	NA	13.86	13.49	2.19	NA	NA	39.06	38.69	090
44160		A	Removal of colon	15.88	NA	NA	7.85	9.26	1.55	NA	NA	25.28	26.69	090
44200		A	Laparoscopy, enterolysis	14.44	NA	NA	6.98	7.48	1.46	NA	NA	22.88	23.38	090
44201		A	Laparoscopy, jejunostomy	9.78	NA	NA	5.28	5.28	0.97	NA	NA	16.03	16.03	090
44202		A	Laparo, resect intestine	22.04	NA	NA	10.17	11.22	2.16	NA	NA	34.37	35.42	090

[1] CPT codes and descriptions only are copyright 2000 American Medical Association. All Rights Reserved. Applicable FARS/DFARS Apply.
[2] Copyright 1994 American Dental Association. All rights reserved.
[3] + Indicates RVUs are not used for Medicare payment.
[4] PE RVUs = Practice Expense Relative Value Units.

ADDENDUM B.—RELATIVE VALUE UNITS (RVU'S) AND RELATED INFORMATION—Continued

CPT[1]/ HCPCS[2]	MOD	Status	Description	Physician Work RVUs[3]	Fully Implemented Non-Facility PE RVUs	Year 2001 Transitional Non-Facility PE RVUs	Fully Implemented Facility PE RVUs	Year 2001 Transitional Facility PE RVUs	Mal-Practice RVUs	Fully Implemented Non-Facility Total	Year 2001 Transitional Non-Facility Total	Fully Implemented Facility Total	Year 2001 Transitional Facility Total	Global
44209		C	Laparoscope proc, intestine	0.00	0.00	0.00	0.00	0.00	0.00	0.00	0.00	0.00	0.00	YYY
44300		A	Open bowel to skin	8.88	NA	NA	5.58	5.82	0.88	NA	NA	15.34	15.58	090
44310		A	Ileostomy/jejunostomy	11.70	NA	NA	8.79	8.73	1.13	NA	NA	21.62	21.56	090
44312		A	Revision of ileostomy	5.88	NA	NA	4.26	4.03	0.54	NA	NA	10.68	10.45	090
44314		A	Revision of ileostomy	11.04	NA	NA	8.74	8.37	0.99	NA	NA	20.77	20.40	090
44316		A	Devise bowel pouch	15.47	NA	NA	12.23	11.79	1.41	NA	NA	29.11	28.67	090
44320		A	Colostomy	12.94	NA	NA	10.11	9.61	1.28	NA	NA	24.33	23.83	090
44322		A	Colostomy with biopsies	11.98	NA	NA	9.84	9.84	1.18	NA	NA	23.00	23.00	090
44340		A	Revision of colostomy	5.66	NA	NA	3.99	3.45	0.56	NA	NA	10.21	9.67	090
44345		A	Revision of colostomy	11.32	NA	NA	6.81	6.42	1.11	NA	NA	19.24	18.85	090
44346		A	Revision of colostomy	12.46	NA	NA	7.25	7.24	1.20	NA	NA	20.91	20.90	090
44360		A	Small bowel endoscopy	2.59	NA	NA	1.31	1.85	0.14	NA	NA	4.04	4.58	000
44361		A	Small bowel endoscopy/biopsy	2.87	NA	NA	1.41	2.02	0.15	NA	NA	4.43	5.04	000
44363		A	Small bowel endoscopy	3.50	NA	NA	1.60	2.01	0.19	NA	NA	5.29	5.70	000
44364		A	Small bowel endoscopy	3.74	NA	NA	1.73	2.56	0.21	NA	NA	5.68	6.51	000
44365		A	Small bowel endoscopy	3.31	NA	NA	1.58	2.30	0.18	NA	NA	5.07	5.79	000
44366		A	Small bowel endoscopy	4.41	NA	NA	1.96	2.96	0.22	NA	NA	6.59	7.59	000
44369		A	Small bowel endoscopy	4.52	NA	NA	1.95	2.98	0.23	NA	NA	6.70	7.73	000
44370		A	Small bowel endoscopy/stent	4.33	1.56	1.56	1.56	1.56	0.26	6.15	6.15	6.15	6.15	000
44372		A	Small bowel endoscopy	4.41	NA	NA	1.99	2.98	0.27	NA	NA	6.67	7.66	000
44373		A	Small bowel endoscopy	3.50	NA	NA	1.70	2.45	0.19	NA	NA	5.39	6.14	000
44376		A	Small bowel endoscopy	5.26	NA	NA	2.28	2.81	0.29	NA	NA	7.83	8.36	000
44377		A	Small bowel endoscopy/biopsy	5.53	NA	NA	2.38	2.94	0.28	NA	NA	8.19	8.75	000
44378		A	Small bowel endoscopy	7.13	NA	NA	2.95	3.64	0.37	NA	NA	10.45	11.14	000
44379		A	S bowel endoscope w/stent	7.07	2.52	2.52	2.52	2.52	0.45	10.04	10.04	10.04	10.04	000
44380		A	Small bowel endoscopy	1.05	NA	NA	0.74	1.01	0.08	NA	NA	1.87	2.14	000
44382		A	Small bowel endoscopy	1.27	NA	NA	0.82	1.16	0.09	NA	NA	2.18	2.52	000
44383		A	Ileoscopy w/stent	2.41	0.87	0.87	0.87	0.87	0.15	3.43	3.43	3.43	3.43	000
44385		A	Endoscopy of bowel pouch	1.82	4.19	3.78	0.94	1.25	0.12	6.13	5.72	2.88	3.19	000
44386		A	Endoscopy, bowel pouch/biop	2.12	5.12	4.26	1.09	1.24	0.15	7.39	6.53	3.36	3.51	000
44388		A	Colon endoscopy	2.50	5.48	5.09	1.26	1.79	0.18	8.16	7.77	3.94	4.47	000
44389		A	Colonoscopy with biopsy	2.77	5.92	5.53	1.37	1.96	0.18	8.87	8.48	4.32	4.91	000
44390		A	Colonoscopy for foreign body	3.39	6.56	5.63	1.59	1.91	0.22	10.17	9.24	5.20	5.52	000
44391		A	Colonoscopy for bleeding	3.82	5.60	5.63	1.55	2.45	0.23	9.65	9.68	5.60	6.50	000
44392		A	Colonoscopy & polypectomy	3.38	6.12	5.99	1.59	2.33	0.23	9.73	9.60	5.20	5.94	000
44393		A	Colonoscopy, lesion removal	4.28	6.79	6.56	1.92	2.88	0.27	11.34	11.11	6.47	7.43	000
44394		A	Colonoscopy w/snare	3.92	6.54	6.31	1.79	2.67	0.26	10.72	10.49	5.97	6.85	000
44397		A	Colonoscopy w stent	4.23	NA	NA	1.90	1.90	0.30	NA	NA	6.43	6.43	000
44500		A	Intro, gastrointestinal tube	0.49	NA	NA	0.35	0.36	0.02	NA	NA	0.86	0.87	000
44602		A	Suture, small intestine	10.61	NA	NA	5.48	6.19	1.07	NA	NA	17.16	17.87	090
44603		A	Suture, small intestine	14.00	NA	NA	6.74	7.52	1.39	NA	NA	22.13	22.91	090
44604		A	Suture, large intestine	14.28	NA	NA	6.87	7.29	1.42	NA	NA	22.57	22.99	090
44605		A	Repair of bowel lesion	15.37	NA	NA	7.68	8.30	1.54	NA	NA	24.59	25.21	090
44615		A	Intestinal stricturoplasty	14.19	NA	NA	6.80	6.93	1.39	NA	NA	22.38	22.51	090
44620		A	Repair bowel opening	10.87	NA	NA	5.50	5.75	1.05	NA	NA	17.42	17.67	090
44625		A	Repair bowel opening	13.41	NA	NA	6.49	7.47	1.30	NA	NA	21.20	22.18	090
44626		A	Repair bowel opening	22.59	NA	NA	9.92	10.53	2.19	NA	NA	34.70	35.31	090
44640		A	Repair bowel-skin fistula	14.83	NA	NA	7.39	7.32	1.46	NA	NA	23.68	23.61	090
44650		A	Repair bowel fistula	15.25	NA	NA	7.55	7.65	1.49	NA	NA	24.29	24.39	090
44660		A	Repair bowel-bladder fistula	14.63	NA	NA	7.18	7.65	1.14	NA	NA	22.95	23.42	090
44661		A	Repair bowel-bladder fistula	16.99	NA	NA	8.03	9.81	1.53	NA	NA	26.55	28.33	090
44680		A	Surgical revision, intestine	13.72	NA	NA	6.99	7.88	1.37	NA	NA	22.08	22.97	090
44700		A	Suspend bowel w/prosthesis	14.35	NA	NA	7.01	8.34	1.21	NA	NA	22.57	23.90	090
44799		C	Intestine surgery procedure	0.00	0.00	0.00	0.00	0.00	0.00	0.00	0.00	0.00	0.00	YYY
44800		A	Excision of bowel pouch	11.23	NA	NA	5.70	5.70	1.11	NA	NA	18.04	18.04	090
44820		A	Excision of mesentery lesion	10.31	NA	NA	5.41	5.63	1.03	NA	NA	16.75	16.97	090
44850		A	Repair of mesentery	9.57	NA	NA	5.49	5.64	0.99	NA	NA	16.05	16.20	090
44899		C	Bowel surgery procedure	0.00	0.00	0.00	0.00	0.00	0.00	0.00	0.00	0.00	0.00	YYY
44900		A	Drain app abscess, open	8.82	NA	NA	5.44	5.24	0.84	NA	NA	15.10	14.90	090
44901		A	Drain app abscess, percut	3.38	NA	NA	4.99	4.44	0.17	NA	NA	8.54	7.99	000
44950		A	Appendectomy	8.70	NA	NA	4.93	5.03	0.88	NA	NA	14.51	14.61	090
44955		A	Appendectomy add-on	1.53	NA	NA	0.58	0.89	0.16	NA	NA	2.27	2.58	ZZZ
44960		A	Appendectomy	10.74	NA	NA	6.01	6.11	1.09	NA	NA	17.84	17.94	090
44970		A	Laparoscopy, appendectomy	8.70	NA	NA	4.31	4.56	0.88	NA	NA	13.89	14.14	090
44979		C	Laparoscope proc, app	0.00	0.00	0.00	0.00	0.00	0.00	0.00	0.00	0.00	0.00	YYY
45000		A	Drainage of pelvic abscess	4.52	NA	NA	3.78	3.27	0.37	NA	NA	8.67	8.16	090
45005		A	Drainage of rectal abscess	1.99	4.22	3.52	1.59	1.54	0.18	6.39	5.69	3.76	3.71	010
45020		A	Drainage of rectal abscess	4.72	NA	NA	3.83	3.58	0.41	NA	NA	8.96	8.71	090
45100		A	Biopsy of rectum	3.68	4.60	3.96	2.11	2.09	0.33	8.61	7.97	6.12	6.10	090
45108		A	Removal of anorectal lesion	4.76	5.65	4.96	3.08	3.03	0.46	10.87	10.18	8.30	8.25	090
45110		A	Removal of rectum	23.80	NA	NA	12.01	13.44	2.26	NA	NA	38.07	39.50	090
45111		A	Partial removal of rectum	16.48	NA	NA	8.87	9.85	1.60	NA	NA	26.95	27.93	090
45112		A	Removal of rectum	25.96	NA	NA	12.40	13.66	2.35	NA	NA	40.71	41.97	090
45113		A	Partial proctectomy	25.99	NA	NA	11.69	13.13	2.13	NA	NA	39.81	41.25	090
45114		A	Partial removal of rectum	23.22	NA	NA	11.38	12.71	2.28	NA	NA	36.88	38.21	090
45116		A	Partial removal of rectum	20.89	NA	NA	10.20	10.57	2.00	NA	NA	33.09	33.46	090
45119		A	Remove rectum w/reservoir	26.21	NA	NA	12.21	13.52	2.13	NA	NA	40.55	41.86	090
45120		A	Removal of rectum	25.00	NA	NA	11.96	13.42	2.28	NA	NA	39.24	40.70	090
45121		A	Removal of rectum and colon	27.51	NA	NA	12.97	12.66	2.66	NA	NA	43.14	42.83	090
45123		A	Partial proctectomy	14.20	NA	NA	6.89	8.36	1.04	NA	NA	22.13	23.60	090
45126		A	Pelvic exenteration	38.39	NA	NA	17.29	17.29	3.23	NA	NA	58.91	58.91	090
45130		A	Excision of rectal prolapse	13.97	NA	NA	7.07	7.72	1.12	NA	NA	22.16	22.81	090
45135		A	Excision of rectal prolapse	16.39	NA	NA	8.49	10.70	1.52	NA	NA	26.40	28.61	090

[1] CPT codes and descriptions only are copyright 2000 American Medical Association. All Rights Reserved. Applicable FARS/DFARS Apply.
[2] Copyright 1994 American Dental Association. All rights reserved.
[3] + Indicates RVUs are not used for Medicare payment.
[4] PE RVUs = Practice Expense Relative Value Units.

ADDENDUM B.—RELATIVE VALUE UNITS (RVU'S) AND RELATED INFORMATION—Continued

CPT[1]/ HCPCS[2]	MOD	Status	Description	Physician Work RVUs[3]	Fully Implemented Non-Facility PE RVUs	Year 2001 Transitional Non-Facility PE RVUs	Fully Implemented Facility PE RVUs	Year 2001 Transitional Facility PE RVUs	Mal-Practice RVUs	Fully Implemented Non-Facility Total	Year 2001 Transitional Non-Facility Total	Fully Implemented Facility Total	Year 2001 Transitional Facility Total	Global
45150		A	Excision of rectal stricture	5.67	5.01	4.68	3.16	3.29	0.46	11.14	10.81	9.29	9.42	090
45160		A	Excision of rectal lesion	13.02	NA	NA	6.41	6.83	1.07	NA	NA	20.50	20.92	090
45170		A	Excision of rectal lesion	9.77	NA	NA	5.31	5.24	0.89	NA	NA	15.97	15.90	090
45190		A	Destruction, rectal tumor	8.28	NA	NA	4.74	4.94	0.76	NA	NA	13.78	13.98	090
45300		A	Proctosigmoidoscopy dx	0.38	1.24	1.08	0.23	0.25	0.05	1.67	1.51	0.66	0.68	000
45303		A	Proctosigmoidoscopy dilate	0.44	1.41	1.23	0.26	0.28	0.06	1.91	1.73	0.76	0.78	000
45305		A	Protosigmoidoscopy w/bx	0.56	1.34	1.23	0.30	0.34	0.09	1.99	1.88	0.95	0.99	000
45307		A	Protosigmoidoscopy fb	0.94	2.26	2.04	0.44	0.68	0.15	3.35	3.13	1.53	1.77	000
45308		A	Protosigmoidoscopy removal	0.83	1.49	1.43	0.40	0.46	0.13	2.45	2.39	1.36	1.42	000
45309		A	Protosigmoidoscopy removal	1.11	2.07	1.86	0.50	0.53	0.17	3.35	3.14	1.78	1.81	000
45315		A	Protosigmoidoscopy removal	1.40	2.32	2.06	0.62	0.79	0.20	3.92	3.66	2.22	2.39	000
45317		A	Protosigmoidoscopy bleed	1.50	1.76	1.66	0.65	0.83	0.20	3.46	3.36	2.35	2.53	000
45320		A	Protosigmoidoscopy ablate	1.58	1.71	1.79	0.68	1.02	0.20	3.49	3.57	2.46	2.80	000
45321		A	Protosigmoidoscopy volvul	1.17	NA	NA	0.53	0.80	0.17	NA	NA	1.87	2.14	000
45327		A	Proctosigmoidoscopy w/stent	1.46	NA	NA	0.83	0.83	0.12	NA	NA	2.41	2.41	000
45330		A	Diagnostic sigmoidoscopy	0.88	1.75	1.65	0.42	0.46	0.05	2.68	2.58	1.35	1.39	000
45331		A	Sigmoidoscopy and biopsy	1.15	1.98	1.92	0.52	0.77	0.07	3.20	3.14	1.74	1.99	000
45332		A	Sigmoidoscopy w/fb removal	1.79	3.54	3.13	0.75	1.04	0.11	5.44	5.03	2.65	2.94	000
45333		A	Sigmoidoscopy & polypectomy	1.79	3.14	2.96	0.75	1.15	0.12	5.05	4.87	2.66	3.06	000
45334		A	Sigmoidoscopy for bleeding	2.73	NA	NA	1.09	1.55	0.16	NA	NA	3.98	4.44	000
45337		A	Sigmoidoscopy & decompress	2.15	NA	NA	0.89	1.37	0.15	NA	NA	3.19	3.67	000
45338		A	Sigmoidoscpy w/tumr remove	2.34	3.67	3.36	0.95	1.32	0.15	6.16	5.85	3.44	3.81	000
45339		A	Sigmoidoscopy w/ablate tumr	2.86	2.85	3.02	1.14	1.74	0.17	5.88	6.05	4.17	4.77	000
45341		A	Sigmoidoscopy w/ultrasound	3.46	NA	NA	1.66	1.66	0.24	NA	NA	5.36	5.36	000
45342		A	Sigmoidoscopy w/us guide bx	4.08	NA	NA	1.81	1.81	0.29	NA	NA	6.18	6.18	000
45345		A	Sigmodoscopy w/stent	2.66	NA	NA	1.30	1.30	0.18	NA	NA	4.14	4.14	000
45355		A	Surgical colonoscopy	3.52	NA	NA	1.29	1.29	0.26	NA	NA	5.07	5.07	000
45378		A	Diagnostic colonoscopy	3.68	6.60	6.07	1.70	2.38	0.20	10.48	9.95	5.58	6.26	000
45378	53	A	Diagnostic colonoscopy	0.88	1.75	1.65	0.42	0.46	0.05	2.68	2.58	1.35	1.39	000
45379		A	Colonoscopy w/fb removal	4.69	7.33	6.94	2.05	2.95	0.25	12.27	11.88	6.99	7.89	000
45380		A	Colonoscopy and biopsy	3.98	6.78	6.39	1.81	2.56	0.21	10.97	10.58	6.00	6.75	000
45382		A	Colonoscopy/control bleeding	5.69	7.95	7.56	2.23	3.27	0.27	13.91	13.52	8.19	9.23	000
45383		A	Lesion removal colonoscopy	5.83	7.82	7.47	2.48	3.47	0.32	13.97	13.62	8.63	9.62	000
45384		A	Lesion remove colonoscopy	4.67	7.41	6.96	2.06	2.95	0.24	12.32	11.87	6.97	7.86	000
45385		A	Lesion removal colonoscopy	5.27	7.57	7.48	2.28	3.30	0.28	13.12	13.03	7.83	8.85	000
45387		A	Colonoscopy w/stent	5.62	NA	NA	2.41	2.41	0.36	NA	NA	8.39	8.39	000
45500		A	Repair of rectum	7.29	NA	NA	4.25	4.80	0.56	NA	NA	12.10	12.65	090
45505		A	Repair of rectum	6.02	NA	NA	3.27	4.16	0.50	NA	NA	9.79	10.68	090
45520		A	Treatment of rectal prolapse	0.55	0.73	0.71	0.19	0.23	0.04	1.32	1.30	0.78	0.82	000
45540		A	Correct rectal prolapse	12.92	NA	NA	7.02	7.95	1.17	NA	NA	21.11	22.04	090
45541		A	Correct rectal prolapse	10.64	NA	NA	6.04	7.29	0.88	NA	NA	17.56	18.81	090
45550		A	Repair rectum/remove sigmoid	18.26	NA	NA	8.91	9.80	1.58	NA	NA	28.75	29.64	090
45560		A	Repair of rectocele	8.40	NA	NA	5.04	5.08	0.73	NA	NA	14.17	14.21	090
45562		A	Exploration/repair of rectum	12.21	NA	NA	6.33	6.94	1.15	NA	NA	19.69	20.30	090
45563		A	Exploration/repair of rectum	18.63	NA	NA	9.56	10.64	1.84	NA	NA	30.03	31.11	090
45800		A	Repair rect/bladder fistula	14.11	NA	NA	6.91	7.85	1.14	NA	NA	22.16	23.10	090
45805		A	Repair fistula w/colostomy	16.50	NA	NA	8.59	9.79	1.47	NA	NA	26.56	27.76	090
45820		A	Repair rectourethral fistula	14.67	NA	NA	7.24	7.87	1.17	NA	NA	23.08	23.71	090
45825		A	Repair fistula w/colostomy	16.87	NA	NA	8.67	9.18	0.97	NA	NA	26.51	27.02	090
45900		A	Reduction of rectal prolapse	1.83	NA	NA	0.78	0.74	0.17	NA	NA	2.78	2.74	010
45905		A	Dilation of anal sphincter	1.61	3.06	2.49	0.72	0.73	0.14	4.81	4.24	2.47	2.48	010
45910		A	Dilation of rectal narrowing	1.96	4.16	3.36	0.85	0.87	0.14	6.26	5.46	2.95	2.97	010
45915		A	Remove rectal obstruction	2.20	4.10	3.29	0.84	0.84	0.17	6.47	5.66	3.21	3.21	010
45999		C	Rectum surgery procedure	0.00	0.00	0.00	0.00	0.00	0.00	0.00	0.00	0.00	0.00	YYY
46030		A	Removal of rectal marker	1.23	3.22	2.52	1.21	1.02	0.11	4.56	3.86	2.55	2.36	010
46040		A	Incision of rectal abscess	4.96	5.27	4.41	3.09	2.78	0.48	10.71	9.85	8.53	8.22	090
46045		A	Incision of rectal abscess	4.32	NA	NA	2.80	2.60	0.40	NA	NA	7.52	7.32	090
46050		A	Incision of anal abscess	1.19	3.38	2.70	1.28	1.04	0.11	4.68	4.00	2.58	2.34	010
46060		A	Incision of rectal abscess	5.69	NA	NA	3.80	4.30	0.52	NA	NA	10.01	10.51	090
46070		A	Incision of anal septum	2.71	NA	NA	2.45	2.21	0.27	NA	NA	5.43	5.19	090
46080		A	Incision of anal sphincter	2.49	3.65	3.32	1.62	1.79	0.23	6.37	6.04	4.34	4.51	010
46083		A	Incise external hemorrhoid	1.40	4.43	3.49	1.45	1.17	0.12	5.95	5.01	2.97	2.69	010
46200		A	Removal of anal fissure	3.42	3.81	3.75	2.38	2.68	0.30	7.53	7.47	6.10	6.40	090
46210		A	Removal of anal crypt	2.67	4.82	3.83	2.14	1.82	0.26	7.75	6.76	5.07	4.75	090
46211		A	Removal of anal crypts	4.25	5.33	4.51	2.92	2.71	0.37	9.95	9.13	7.54	7.33	090
46220		A	Removal of anal tab	1.56	1.25	1.11	0.59	0.61	0.14	2.95	2.81	2.29	2.31	010
46221		A	Ligation of hemorrhoid(s)	1.43	3.03	2.45	0.54	0.50	0.12	4.58	4.00	2.09	2.05	010
46230		A	Removal of anal tabs	2.57	4.03	3.25	1.69	1.38	0.22	6.82	6.04	4.48	4.17	010
46250		A	Hemorrhoidectomy	4.53	5.32	4.76	2.92	2.96	0.43	10.28	9.72	7.88	7.92	090
46255		A	Hemorrhoidectomy	5.36	5.97	5.76	3.21	3.69	0.51	11.84	11.63	9.08	9.56	090
46257		A	Remove hemorrhoids & fissure	6.28	NA	NA	3.46	4.02	0.59	NA	NA	10.33	10.89	090
46258		A	Remove hemorrhoids & fistula	6.67	NA	NA	3.67	4.35	0.64	NA	NA	10.98	11.66	090
46260		A	Hemorrhoidectomy	7.42	NA	NA	4.41	4.96	0.68	NA	NA	12.51	13.06	090
46261		A	Remove hemorrhoids & fissure	8.24	NA	NA	4.58	5.23	0.70	NA	NA	13.52	14.17	090
46262		A	Remove hemorrhoids & fistula	8.73	NA	NA	4.85	5.46	0.76	NA	NA	14.34	14.95	090
46270		A	Removal of anal fistula	3.72	4.74	4.06	2.56	2.43	0.36	8.82	8.14	6.64	6.51	090
46275		A	Removal of anal fistula	4.56	4.61	4.82	2.83	3.49	0.40	9.57	9.78	7.79	8.45	090
46280		A	Removal of anal fistula	5.98	NA	NA	3.76	4.47	0.50	NA	NA	10.24	10.95	090
46285		A	Removal of anal fistula	4.09	3.84	3.50	2.64	2.60	0.34	8.27	7.93	7.07	7.03	090
46288		A	Repair anal fistula	7.13	NA	NA	4.23	4.14	0.60	NA	NA	11.96	11.87	090
46320		A	Removal of hemorrhoid clot	1.61	3.63	2.91	1.49	1.21	0.14	5.38	4.66	3.24	2.96	010
46500		A	Injection into hemorrhoids	1.61	2.55	2.00	0.60	0.50	0.12	4.28	3.73	2.33	2.23	010
46600		A	Diagnostic anoscopy	0.50	0.77	0.65	0.15	0.15	0.04	1.31	1.19	0.69	0.69	000

[1] CPT codes and descriptions only are copyright 2000 American Medical Association. All Rights Reserved. Applicable FARS/DFARS Apply.
[2] Copyright 1994 American Dental Association. All rights reserved.
[3] + Indicates RVUs are not used for Medicare payment.
[4] PE RVUs = Practice Expense Relative Value Units.

ADDENDUM B.—RELATIVE VALUE UNITS (RVU'S) AND RELATED INFORMATION—Continued

CPT[1]/ HCPCS[2]	MOD	Status	Description	Physician Work RVUs[3]	Fully Implemented Non-Facility PE RVUs	Year 2001 Transitional Non-Facility PE RVUs	Fully Implemented Facility PE RVUs	Year 2001 Transitional Facility PE RVUs	Mal-Practice RVUs	Fully Implemented Non-Facility Total	Year 2001 Transitional Non-Facility Total	Fully Implemented Facility Total	Year 2001 Transitional Facility Total	Global
46604		A	Anoscopy and dilation	1.31	0.96	0.82	0.49	0.42	0.09	2.36	2.22	1.89	1.82	000
46606		A	Anoscopy and biopsy	0.81	0.88	0.76	0.31	0.28	0.07	1.76	1.64	1.19	1.16	000
46608		A	Anoscopy/ remove for body	1.51	1.78	1.63	0.47	0.64	0.13	3.42	3.27	2.11	2.28	000
46610		A	Anoscopy/remove lesion	1.32	1.41	1.29	0.50	0.61	0.12	2.85	2.73	1.94	2.05	000
46611		A	Anoscopy	1.81	1.96	1.70	0.68	0.63	0.15	3.92	3.66	2.64	2.59	000
46612		A	Anoscopy/ remove lesions	2.34	2.29	2.10	0.88	1.04	0.18	4.81	4.62	3.40	3.56	000
46614		A	Anoscopy/control bleeding	2.01	1.62	1.64	0.74	0.77	0.14	3.77	3.79	2.89	2.92	000
46615		A	Anoscopy	2.68	1.75	1.73	1.01	0.97	0.23	4.66	4.64	3.92	3.88	000
46700		A	Repair of anal stricture	7.25	NA	NA	4.12	4.76	0.56	NA	NA	11.93	12.57	090
46705		A	Repair of anal stricture	7.17	NA	NA	4.83	4.60	0.73	NA	NA	12.73	12.50	090
46715		A	Repair of anovaginal fistula	7.46	NA	NA	4.63	4.43	0.76	NA	NA	12.85	12.65	090
46716		A	Repair of anovaginal fistula	12.85	NA	NA	7.04	6.92	1.30	NA	NA	21.19	21.07	090
46730		A	Construction of absent anus	22.39	NA	NA	10.92	11.11	2.03	NA	NA	35.34	35.53	090
46735		A	Construction of absent anus	27.02	NA	NA	13.19	13.43	2.64	NA	NA	42.85	43.09	090
46740		A	Construction of absent anus	24.19	NA	NA	11.01	11.39	1.99	NA	NA	37.19	37.57	090
46742		A	Repair of imperforated anus	29.67	NA	NA	15.65	17.10	2.63	NA	NA	47.95	49.40	090
46744		A	Repair of cloacal anomaly	33.21	NA	NA	14.55	16.93	2.27	NA	NA	50.03	52.41	090
46746		A	Repair of cloacal anomaly	36.74	NA	NA	18.48	20.44	2.51	NA	NA	57.73	59.69	090
46748		A	Repair of cloacal anomaly	40.52	NA	NA	19.99	22.33	2.77	NA	NA	63.28	65.62	090
46750		A	Repair of anal sphincter	8.14	NA	NA	4.84	5.26	0.69	NA	NA	13.67	14.09	090
46751		A	Repair of anal sphincter	8.77	NA	NA	6.22	5.77	0.78	NA	NA	15.77	15.32	090
46753		A	Reconstruction of anus	6.58	NA	NA	3.53	3.98	0.58	NA	NA	10.69	11.14	090
46754		A	Removal of suture from anus	1.54	4.98	4.14	1.09	1.22	0.12	6.64	5.80	2.75	2.88	010
46760		A	Repair of anal sphincter	11.46	NA	NA	5.77	6.17	0.86	NA	NA	18.09	18.49	090
46761		A	Repair of anal sphincter	10.99	NA	NA	5.68	6.11	0.84	NA	NA	17.51	17.94	090
46762		A	Implant artificial sphincter	10.09	NA	NA	4.94	5.26	0.71	NA	NA	15.74	16.06	090
46900		A	Destruction, anal lesion(s)	1.91	3.19	2.50	0.78	0.64	0.13	5.23	4.54	2.82	2.68	010
46910		A	Destruction, anal lesion(s)	1.86	3.44	2.75	1.48	1.20	0.14	5.44	4.75	3.48	3.20	010
46916		A	Cryosurgery, anal lesion(s)	1.86	3.42	2.75	1.60	1.29	0.09	5.37	4.70	3.55	3.24	010
46917		A	Laser surgery, anal lesions	1.86	4.24	3.71	1.54	1.42	0.16	6.26	5.73	3.56	3.44	010
46922		A	Excision of anal lesion(s)	1.86	3.68	3.11	1.43	1.42	0.17	5.71	5.14	3.46	3.45	010
46924		A	Destruction, anal lesion(s)	2.76	4.91	4.38	1.73	1.99	0.20	7.87	7.34	4.69	4.95	010
46934		A	Destruction of hemorrhoids	4.08	5.74	4.63	3.46	2.76	0.26	10.08	8.97	7.80	7.10	090
46935		A	Destruction of hemorrhoids	2.43	3.91	3.37	0.90	0.90	0.17	6.51	5.97	3.50	3.50	010
46936		A	Destruction of hemorrhoids	4.30	5.58	4.81	3.39	2.86	0.30	10.18	9.41	7.99	7.46	090
46937		A	Cryotherapy of rectal lesion	2.69	4.05	3.68	2.40	2.44	0.12	6.86	6.49	5.21	5.25	010
46938		A	Cryotherapy of rectal lesion	4.66	3.99	3.67	3.48	3.29	0.40	9.05	8.73	8.54	8.35	090
46940		A	Treatment of anal fissure	2.32	2.99	2.38	0.88	0.73	0.17	5.48	4.87	3.37	3.22	010
46942		A	Treatment of anal fissure	2.04	3.07	2.43	0.73	0.61	0.14	5.25	4.61	2.91	2.79	010
46945		A	Ligation of hemorrhoids	2.14	3.76	2.99	2.12	1.68	0.17	6.07	5.30	4.43	3.99	090
46946		A	Ligation of hemorrhoids	3.00	4.99	4.00	2.45	1.97	0.22	8.21	7.22	5.67	5.19	090
46999		C	Anus surgery procedure	0.00	0.00	0.00	0.00	0.00	0.00	0.00	0.00	0.00	0.00	YYY
47000		A	Needle biopsy of liver	1.90	8.46	6.73	0.68	0.89	0.09	10.45	8.72	2.67	2.88	000
47001		A	Needle biopsy, liver add-on	1.90	NA	NA	0.72	0.92	0.18	NA	NA	2.80	3.00	ZZZ
47010		A	Open drainage, liver lesion	10.28	NA	NA	7.49	7.45	0.65	NA	NA	18.42	18.38	090
47011		A	Percut drain, liver lesion	3.70	NA	NA	6.00	5.26	0.17	NA	NA	9.87	9.13	000
47015		A	Inject/aspirate liver cyst	9.70	NA	NA	6.11	6.42	0.86	NA	NA	16.67	16.98	090
47100		A	Wedge biopsy of liver	7.49	NA	NA	4.96	4.61	0.75	NA	NA	13.20	12.85	090
47120		A	Partial removal of liver	22.79	NA	NA	12.56	12.68	2.29	NA	NA	37.64	37.76	090
47122		A	Extensive removal of liver	35.39	NA	NA	17.25	17.71	3.60	NA	NA	56.24	56.70	090
47125		A	Partial removal of liver	31.58	NA	NA	15.87	16.63	3.18	NA	NA	50.63	51.39	090
47130		A	Partial removal of liver	34.25	NA	NA	17.03	17.98	3.47	NA	NA	54.75	55.70	090
47133		X	Removal of donor liver	0.00	0.00	0.00	0.00	0.00	0.00	0.00	0.00	0.00	0.00	XXX
47134		R	Partial removal, donor liver	39.15	NA	NA	15.00	16.81	3.98	NA	NA	58.13	59.94	XXX
47135		R	Transplantation of liver	81.52	NA	NA	43.43	47.35	8.13	NA	NA	133.08	137.00	090
47136		R	Transplantation of liver	68.60	NA	NA	45.80	43.44	6.93	NA	NA	121.33	118.97	090
47300		A	Surgery for liver lesion	9.68	NA	NA	5.79	6.42	0.97	NA	NA	16.44	17.07	090
47350		A	Repair liver wound	12.56	NA	NA	7.01	7.28	1.25	NA	NA	20.82	21.09	090
47360		A	Repair liver wound	17.28	NA	NA	9.45	10.05	1.71	NA	NA	28.44	29.04	090
47361		A	Repair liver wound	30.25	NA	NA	14.47	14.83	3.11	NA	NA	47.83	48.19	090
47362		A	Repair liver wound	11.88	NA	NA	7.81	7.28	1.22	NA	NA	20.91	20.38	090
47379		C	Laparoscope procedure, liver	0.00	0.00	0.00	0.00	0.00	0.00	0.00	0.00	0.00	0.00	YYY
47399		C	Liver surgery procedure	0.00	0.00	0.00	0.00	0.00	0.00	0.00	0.00	0.00	0.00	YYY
47400		A	Incision of liver duct	20.86	NA	NA	10.90	10.49	1.82	NA	NA	33.58	33.17	090
47420		A	Incision of bile duct	16.72	NA	NA	8.42	8.89	1.70	NA	NA	26.84	27.31	090
47425		A	Incision of bile duct	16.68	NA	NA	8.62	9.64	1.60	NA	NA	26.90	27.92	090
47460		A	Incise bile duct sphincter	15.17	NA	NA	7.92	10.16	1.24	NA	NA	24.33	26.57	090
47480		A	Incision of gallbladder	9.10	NA	NA	5.98	6.55	0.85	NA	NA	15.93	16.50	090
47490		A	Incision of gallbladder	7.23	NA	NA	7.42	6.53	0.33	NA	NA	14.98	14.09	090
47500		A	Injection for liver x-rays	1.96	NA	NA	0.69	0.93	0.09	NA	NA	2.74	2.98	000
47505		A	Injection for liver x-rays	0.76	14.97	11.49	0.27	0.43	0.03	15.76	12.28	1.06	1.22	000
47510		A	Insert catheter, bile duct	7.83	NA	NA	8.81	7.39	0.36	NA	NA	17.00	15.58	090
47511		A	Insert bile duct drain	10.50	NA	NA	10.08	8.34	0.47	NA	NA	21.05	19.31	090
47525		A	Change bile duct catheter	5.55	NA	NA	3.30	2.91	0.24	NA	NA	9.09	8.70	010
47530		A	Revise/reinsert bile tube	5.85	NA	NA	4.92	4.10	0.29	NA	NA	11.06	10.24	090
47550		A	Bile duct endoscopy add-on	3.02	NA	NA	1.15	1.29	0.30	NA	NA	4.47	4.61	ZZZ
47552		A	Biliary endoscopy thru skin	6.04	NA	NA	2.56	2.29	0.42	NA	NA	9.02	8.75	000
47553		A	Biliary endoscopy thru skin	6.35	NA	NA	2.73	3.08	0.30	NA	NA	9.38	9.73	000
47554		A	Biliary endoscopy thru skin	9.06	NA	NA	3.66	3.81	0.74	NA	NA	13.46	13.61	000
47555		A	Biliary endoscopy thru skin	7.56	NA	NA	3.17	3.09	0.35	NA	NA	11.08	11.00	000
47556		A	Biliary endoscopy thru skin	8.56	NA	NA	3.51	3.35	0.38	NA	NA	12.45	12.29	000
47560		A	Laparoscopy w/cholangio	4.89	NA	NA	1.98	2.24	0.49	NA	NA	7.36	7.62	000
47561		A	Laparo w/cholangio/biopsy	5.18	NA	NA	2.26	2.76	0.49	NA	NA	7.93	8.43	000

[1] CPT codes and descriptions only are copyright 2000 American Medical Association. All Rights Reserved. Applicable FARS/DFARS Apply.
[2] Copyright 1994 American Dental Association. All rights reserved.
[3] + Indicates RVUs are not used for Medicare payment.
[4] PE RVUs = Practice Expense Relative Value Units.

ADDENDUM B.—RELATIVE VALUE UNITS (RVU'S) AND RELATED INFORMATION—Continued

CPT[1]/ HCPCS[2]	MOD	Status	Description	Physician Work RVUs[3]	Fully Implemented Non-Facility PE RVUs	Year 2001 Transitional Non-Facility PE RVUs	Fully Implemented Facility PE RVUs	Year 2001 Transitional Facility PE RVUs	Mal-Practice RVUs	Fully Implemented Non-Facility Total	Year 2001 Transitional Non-Facility Total	Fully Implemented Facility Total	Year 2001 Transitional Facility Total	Global
47562		A	Laparoscopic cholecystectomy	11.09	NA	NA	5.04	5.95	1.13	NA	NA	17.26	18.17	090
47563		A	Laparo cholecystectomy/graph	11.94	NA	NA	5.53	6.44	1.21	NA	NA	18.68	19.59	090
47564		A	Laparo cholecystectomy/explr	14.23	NA	NA	7.17	7.92	1.44	NA	NA	22.84	23.59	090
47570		A	Laparo cholecystoenterostomy	12.58	NA	NA	6.12	7.08	1.28	NA	NA	19.98	20.94	090
47579		C	Laparoscope proc, biliary	0.00	0.00	0.00	0.00	0.00	0.00	0.00	0.00	0.00	0.00	YYY
47600		A	Removal of gallbladder	11.42	NA	NA	6.16	6.66	1.16	NA	NA	18.74	19.24	090
47605		A	Removal of gallbladder	12.36	NA	NA	6.50	7.08	1.25	NA	NA	20.11	20.69	090
47610		A	Removal of gallbladder	15.83	NA	NA	7.94	8.50	1.61	NA	NA	25.38	25.94	090
47612		A	Removal of gallbladder	15.80	NA	NA	7.76	9.68	1.60	NA	NA	25.16	27.08	090
47620		A	Removal of gallbladder	17.36	NA	NA	8.39	9.34	1.77	NA	NA	27.52	28.47	090
47630		A	Remove bile duct stone	9.11	NA	NA	3.25	3.46	0.46	NA	NA	12.82	13.03	090
47700		A	Exploration of bile ducts	15.62	NA	NA	8.92	8.76	1.40	NA	NA	25.94	25.78	090
47701		A	Bile duct revision	29.55	NA	NA	14.49	13.10	3.00	NA	NA	47.04	45.65	090
47711		A	Excision of bile duct tumor	19.37	NA	NA	10.19	10.92	1.98	NA	NA	31.54	32.27	090
47712		A	Excision of bile duct tumor	25.44	NA	NA	12.89	12.94	2.67	NA	NA	41.00	41.05	090
47715		A	Excision of bile duct cyst	15.81	NA	NA	7.97	8.21	1.59	NA	NA	25.37	25.61	090
47716		A	Fusion of bile duct cyst	13.83	NA	NA	8.56	8.20	1.41	NA	NA	23.80	23.44	090
47720		A	Fuse gallbladder & bowel	13.38	NA	NA	7.95	8.45	1.37	NA	NA	22.70	23.20	090
47721		A	Fuse upper gi structures	16.08	NA	NA	8.89	9.77	1.63	NA	NA	26.60	27.48	090
47740		A	Fuse gallbladder & bowel	15.54	NA	NA	8.78	9.36	1.59	NA	NA	25.91	26.49	090
47741		A	Fuse gallbladder & bowel	17.95	NA	NA	9.55	11.06	1.82	NA	NA	29.32	30.83	090
47760		A	Fuse bile ducts and bowel	21.74	NA	NA	10.99	11.39	2.21	NA	NA	34.94	35.34	090
47765		A	Fuse liver ducts & bowel	20.93	NA	NA	11.63	12.69	2.18	NA	NA	34.74	35.80	090
47780		A	Fuse bile ducts and bowel	22.29	NA	NA	11.25	11.98	2.27	NA	NA	35.81	36.54	090
47785		A	Fuse bile ducts and bowel	26.23	NA	NA	13.37	13.57	2.69	NA	NA	42.29	42.49	090
47800		A	Reconstruction of bile ducts	19.60	NA	NA	10.17	11.22	1.95	NA	NA	31.72	32.77	090
47801		A	Placement, bile duct support	12.76	NA	NA	9.34	8.49	0.69	NA	NA	22.79	21.94	090
47802		A	Fuse liver duct & intestine	18.13	NA	NA	10.48	10.65	1.84	NA	NA	30.45	30.62	090
47900		A	Suture bile duct injury	16.74	NA	NA	9.16	10.46	1.65	NA	NA	27.55	28.85	090
47999		C	Bile tract surgery procedure	0.00	0.00	0.00	0.00	0.00	0.00	0.00	0.00	0.00	0.00	YYY
48000		A	Drainage of abdomen	14.91	NA	NA	8.27	8.12	1.32	NA	NA	24.50	24.35	090
48001		A	Placement of drain, pancreas	18.83	NA	NA	9.37	9.23	1.90	NA	NA	30.10	29.96	090
48005		A	Resect/debride pancreas	22.40	NA	NA	10.65	10.48	2.26	NA	NA	35.31	35.14	090
48020		A	Removal of pancreatic stone	14.22	NA	NA	7.25	7.28	1.36	NA	NA	22.83	22.86	090
48100		A	Biopsy of pancreas	11.08	NA	NA	6.62	6.11	1.08	NA	NA	18.78	18.27	090
48102		A	Needle biopsy, pancreas	4.68	8.31	6.89	2.41	2.46	0.20	13.19	11.77	7.29	7.34	010
48120		A	Removal of pancreas lesion	14.36	NA	NA	7.14	7.99	1.35	NA	NA	22.85	23.70	090
48140		A	Partial removal of pancreas	20.78	NA	NA	10.29	11.32	2.12	NA	NA	33.19	34.22	090
48145		A	Partial removal of pancreas	21.76	NA	NA	11.28	12.72	2.25	NA	NA	35.29	36.73	090
48146		A	Pancreatectomy	23.91	NA	NA	13.04	14.26	2.43	NA	NA	39.38	40.60	090
48148		A	Removal of pancreatic duct	15.71	NA	NA	8.95	8.95	1.61	NA	NA	26.27	26.27	090
48150		A	Partial removal of pancreas	43.48	NA	NA	21.07	21.92	4.43	NA	NA	68.98	69.83	090
48152		A	Pancreatectomy	39.63	NA	NA	19.66	20.86	4.07	NA	NA	63.36	64.56	090
48153		A	Pancreatectomy	43.38	NA	NA	20.98	21.85	4.40	NA	NA	68.76	69.63	090
48154		A	Pancreatectomy	39.95	NA	NA	19.94	21.07	4.10	NA	NA	63.99	65.12	090
48155		A	Removal of pancreas	22.32	NA	NA	13.25	15.47	2.30	NA	NA	37.87	40.09	090
48160		N	Pancreas removal/transplant	0.00	0.00	0.00	0.00	0.00	0.00	0.00	0.00	0.00	0.00	XXX
48180		A	Fuse pancreas and bowel	22.39	NA	NA	10.69	11.44	2.24	NA	NA	35.32	36.07	090
48400		A	Injection, intraop add-on	1.95	NA	NA	0.70	0.81	0.10	NA	NA	2.75	2.86	ZZZ
48500		A	Surgery of pancreas cyst	13.84	NA	NA	7.28	7.78	1.35	NA	NA	22.47	22.97	090
48510		A	Drain pancreatic pseudocyst	12.96	NA	NA	7.12	7.39	1.07	NA	NA	21.15	21.42	090
48511		A	Drain pancreatic pseudocyst	4.00	NA	NA	4.57	4.25	0.17	NA	NA	8.74	8.42	000
48520		A	Fuse pancreas cyst and bowel	14.12	NA	NA	6.98	8.30	1.41	NA	NA	22.51	23.83	090
48540		A	Fuse pancreas cyst and bowel	17.86	NA	NA	8.45	9.77	1.82	NA	NA	28.13	29.45	090
48545		A	Pancreatorrhaphy	16.47	NA	NA	8.34	8.33	1.61	NA	NA	26.42	26.41	090
48547		A	Duodenal exclusion	23.40	NA	NA	10.50	10.88	2.30	NA	NA	36.20	36.58	090
48550		X	Donor pancreatectomy	0.00	0.00	0.00	0.00	0.00	0.00	0.00	0.00	0.00	0.00	XXX
48554		R	Transpl allograft pancreas	34.17	NA	NA	12.84	14.48	3.30	NA	NA	50.31	51.95	090
48556		A	Removal, allograft pancreas	15.71	NA	NA	8.75	8.53	1.52	NA	NA	25.98	25.76	090
48999		C	Pancreas surgery procedure	0.00	0.00	0.00	0.00	0.00	0.00	0.00	0.00	0.00	0.00	YYY
49000		A	Exploration of abdomen	11.68	NA	NA	6.32	6.58	1.17	NA	NA	19.17	19.43	090
49002		A	Reopening of abdomen	10.49	NA	NA	6.21	6.30	1.06	NA	NA	17.76	17.85	090
49010		A	Exploration behind abdomen	12.28	NA	NA	7.18	7.27	1.22	NA	NA	20.68	20.77	090
49020		A	Drain abdominal abscess	16.79	NA	NA	9.52	8.45	1.31	NA	NA	27.62	26.55	090
49021		A	Drain abdominal abscess	3.38	NA	NA	6.02	5.53	0.16	NA	NA	9.56	9.07	000
49040		A	Drain, open, abdom abscess	9.94	NA	NA	6.81	6.88	0.84	NA	NA	17.59	17.66	090
49041		A	Drain, percut, abdom abscess	4.00	NA	NA	6.23	5.50	0.18	NA	NA	10.41	9.68	000
49060		A	Drain, open, retrop abscess	11.66	NA	NA	8.05	7.54	0.77	NA	NA	20.48	19.97	090
49061		A	Drain, percut, retroper absc	3.70	NA	NA	6.15	5.37	0.17	NA	NA	10.02	9.24	000
49062		A	Drain to peritoneal cavity	11.36	NA	NA	7.40	7.74	1.08	NA	NA	19.84	20.18	090
49080		A	Puncture, peritoneal cavity	1.35	2.93	2.43	0.61	0.69	0.07	4.35	3.85	2.03	2.11	000
49081		A	Removal of abdominal fluid	1.26	2.76	2.27	0.58	0.64	0.06	4.08	3.59	1.90	1.96	000
49085		A	Remove abdomen foreign body	8.93	NA	NA	5.60	5.14	0.88	NA	NA	15.41	14.95	090
49180		A	Biopsy, abdominal mass	1.73	7.02	5.76	0.61	0.95	0.08	8.83	7.57	2.42	2.76	000
49200		A	Removal of abdominal lesion	10.25	NA	NA	6.45	7.11	0.89	NA	NA	17.59	18.25	090
49201		A	Removal of abdominal lesion	14.84	NA	NA	8.70	9.81	1.44	NA	NA	24.98	26.09	090
49215		A	Excise sacral spine tumor	23.20	NA	NA	11.20	10.71	2.48	NA	NA	36.88	36.39	090
49220		A	Multiple surgery, abdomen	14.88	NA	NA	7.90	9.26	1.51	NA	NA	24.29	25.65	090
49250		A	Excision of umbilicus	8.35	NA	NA	5.15	5.09	0.84	NA	NA	14.34	14.28	090
49255		A	Removal of omentum	11.14	NA	NA	6.67	6.40	1.12	NA	NA	18.93	18.66	090
49320		A	Diag laparo separate proc	5.10	NA	NA	3.04	3.49	0.50	NA	NA	8.64	9.09	010
49321		A	Laparoscopy, biopsy	5.40	NA	NA	3.12	3.67	0.53	NA	NA	9.05	9.60	010
49322		A	Laparoscopy, aspiration	5.70	NA	NA	3.40	3.87	0.57	NA	NA	9.67	10.14	010

[1] CPT codes and descriptions only are copyright 2000 American Medical Association. All Rights Reserved. Applicable FARS/DFARS Apply.
[2] Copyright 1994 American Dental Association. All rights reserved.
[3] + Indicates RVUs are not used for Medicare payment.
[4] PE RVUs = Practice Expense Relative Value Units.

ADDENDUM B.—RELATIVE VALUE UNITS (RVU'S) AND RELATED INFORMATION—Continued

CPT[1]/ HCPCS[2]	MOD	Status	Description	Physician Work RVUs[3]	Fully Implemented Non-Facility PE RVUs	Year 2001 Transitional Non-Facility PE RVUs	Fully Implemented Facility PE RVUs	Year 2001 Transitional Facility PE RVUs	Mal-Practice RVUs	Fully Implemented Non-Facility Total	Year 2001 Transitional Non-Facility Total	Fully Implemented Facility Total	Year 2001 Transitional Facility Total	Global
49323		A	Laparo drain lymphocele	9.48	NA	NA	4.14	4.93	0.88	NA	NA	14.50	15.29	090
49329		C	Laparo proc, abdm/per/oment	0.00	0.00	0.00	0.00	0.00	0.00	0.00	0.00	0.00	0.00	YYY
49400		A	Air injection into abdomen	1.88	NA	NA	0.83	0.93	0.11	NA	NA	2.82	2.92	000
49420		A	Insert abdominal drain	2.22	NA	NA	0.97	1.16	0.13	NA	NA	3.32	3.51	000
49421		A	Insert abdominal drain	5.54	NA	NA	4.14	4.23	0.55	NA	NA	10.23	10.32	090
49422		A	Remove perm cannula/catheter	6.25	NA	NA	3.06	3.42	0.63	NA	NA	9.94	10.30	010
49423		A	Exchange drainage catheter	1.46	NA	NA	0.69	0.82	0.07	NA	NA	2.22	2.35	000
49424		A	Assess cyst, contrast inject	0.76	NA	NA	0.44	0.49	0.03	NA	NA	1.23	1.28	000
49425		A	Insert abdomen-venous drain	11.37	NA	NA	7.14	7.66	1.21	NA	NA	19.72	20.24	090
49426		A	Revise abdomen-venous shunt	9.63	NA	NA	6.18	6.10	0.93	NA	NA	16.74	16.66	090
49427		A	Injection, abdominal shunt	0.89	NA	NA	0.48	0.49	0.05	NA	NA	1.42	1.43	000
49428		A	Ligation of shunt	2.38	NA	NA	1.78	1.62	0.31	NA	NA	4.47	4.31	010
49429		A	Removal of shunt	7.40	NA	NA	3.70	3.68	0.81	NA	NA	11.91	11.89	010
49495		A	Repair inguinal hernia, init	5.84	NA	NA	3.56	4.02	0.55	NA	NA	9.95	10.41	090
49496		A	Repair inguinal hernia, init	8.79	NA	NA	6.55	6.28	0.89	NA	NA	16.23	15.96	090
49500		A	Repair inguinal hernia	4.68	NA	NA	3.13	3.70	0.46	NA	NA	8.27	8.84	090
49501		A	Repair inguinal hernia, init	7.58	NA	NA	4.18	4.50	0.76	NA	NA	12.52	12.84	090
49505		A	Repair inguinal hernia	6.49	4.17	4.35	3.73	4.02	0.65	11.31	11.49	10.87	11.16	090
49507		A	Repair inguinal hernia	8.17	NA	NA	5.59	5.56	0.83	NA	NA	14.59	14.56	090
49520		A	Rerepair inguinal hernia	8.22	NA	NA	4.98	5.15	0.84	NA	NA	14.04	14.21	090
49521		A	Repair inguinal hernia, rec	10.22	NA	NA	5.28	5.33	1.04	NA	NA	16.54	16.59	090
49525		A	Repair inguinal hernia	7.32	NA	NA	4.53	4.90	0.74	NA	NA	12.59	12.96	090
49540		A	Repair lumbar hernia	8.87	NA	NA	5.17	5.29	0.90	NA	NA	14.94	15.06	090
49550		A	Repair femoral hernia	7.37	NA	NA	4.12	4.34	0.75	NA	NA	12.24	12.46	090
49553		A	Repair femoral hernia, init	8.06	NA	NA	4.51	4.63	0.83	NA	NA	13.40	13.52	090
49555		A	Repair femoral hernia	7.71	NA	NA	4.84	5.28	0.79	NA	NA	13.34	13.78	090
49557		A	Repair femoral hernia, recur	9.52	NA	NA	5.04	5.43	0.97	NA	NA	15.53	15.92	090
49560		A	Repair abdominal hernia	9.88	NA	NA	5.54	5.69	1.00	NA	NA	16.42	16.57	090
49561		A	Repair incisional hernia	12.17	NA	NA	6.07	6.09	1.23	NA	NA	19.47	19.49	090
49565		A	Rerepair abdominal hernia	9.88	NA	NA	5.70	6.02	1.00	NA	NA	16.58	16.90	090
49566		A	Repair incisional hernia	12.30	NA	NA	6.11	6.32	1.24	NA	NA	19.65	19.86	090
49568		A	Hernia repair w/mesh	4.89	NA	NA	1.86	2.09	0.50	NA	NA	7.25	7.48	ZZZ
49570		A	Repair epigastric hernia	4.86	NA	NA	3.21	3.60	0.50	NA	NA	8.57	8.96	090
49572		A	Repair epigastric hernia	5.75	NA	NA	3.65	4.26	0.58	NA	NA	9.98	10.59	090
49580		A	Repair umbilical hernia	3.34	NA	NA	2.66	3.04	0.34	NA	NA	6.34	6.72	090
49582		A	Repair umbilical hernia	5.68	NA	NA	4.45	4.59	0.57	NA	NA	10.70	10.84	090
49585		A	Repair umbilical hernia	5.32	NA	NA	3.76	4.02	0.53	NA	NA	9.61	9.87	090
49587		A	Repair umbilical hernia	6.46	NA	NA	3.88	4.11	0.65	NA	NA	10.99	11.22	090
49590		A	Repair abdominal hernia	7.29	NA	NA	4.49	4.90	0.74	NA	NA	12.52	12.93	090
49600		A	Repair umbilical lesion	10.96	NA	NA	6.48	6.29	1.13	NA	NA	18.57	18.38	090
49605		A	Repair umbilical lesion	24.94	NA	NA	12.36	11.60	2.57	NA	NA	39.87	39.11	090
49606		A	Repair umbilical lesion	21.31	NA	NA	10.56	10.18	2.22	NA	NA	34.09	33.71	090
49610		A	Repair umbilical lesion	10.50	NA	NA	6.60	6.44	0.77	NA	NA	17.87	17.71	090
49611		A	Repair umbilical lesion	8.92	NA	NA	6.46	7.29	0.65	NA	NA	16.03	16.86	090
49650		A	Laparo hernia repair initial	6.27	NA	NA	3.39	3.77	0.64	NA	NA	10.30	10.68	090
49651		A	Laparo hernia repair recur	8.24	NA	NA	4.48	4.78	0.84	NA	NA	13.56	13.86	090
49659		C	Laparo proc, hernia repair	0.00	0.00	0.00	0.00	0.00	0.00	0.00	0.00	0.00	0.00	YYY
49900		A	Repair of abdominal wall	12.28	NA	NA	6.91	6.18	1.23	NA	NA	20.42	19.69	090
49905		A	Omental flap	6.55	NA	NA	2.43	2.75	0.61	NA	NA	9.59	9.91	ZZZ
49906		C	Free omental flap, microvasc	0.00	0.00	0.00	0.00	0.00	0.00	0.00	0.00	0.00	0.00	090
49999		C	Abdomen surgery procedure	0.00	0.00	0.00	0.00	0.00	0.00	0.00	0.00	0.00	0.00	YYY
50010		A	Exploration of kidney	10.98	NA	NA	6.77	7.67	0.79	NA	NA	18.54	19.44	090
50020		A	Renal abscess, open drain	14.66	NA	NA	13.15	11.71	0.80	NA	NA	28.61	27.17	090
50021		A	Renal abscess, percut drain	3.38	NA	NA	11.64	9.43	0.15	NA	NA	15.17	12.96	000
50040		A	Drainage of kidney	14.94	NA	NA	11.09	10.27	0.82	NA	NA	26.85	26.03	090
50045		A	Exploration of kidney	15.46	NA	NA	8.14	8.77	1.06	NA	NA	24.66	25.29	090
50060		A	Removal of kidney stone	19.30	NA	NA	9.48	10.43	1.14	NA	NA	29.92	30.87	090
50065		A	Incision of kidney	20.79	NA	NA	7.49	9.40	1.13	NA	NA	29.41	31.32	090
50070		A	Incision of kidney	20.32	NA	NA	10.39	11.29	1.20	NA	NA	31.91	32.81	090
50075		A	Removal of kidney stone	25.34	NA	NA	12.20	13.73	1.51	NA	NA	39.05	40.58	090
50080		A	Removal of kidney stone	14.71	NA	NA	10.36	11.08	0.86	NA	NA	25.93	26.65	090
50081		A	Removal of kidney stone	21.80	NA	NA	12.45	13.40	1.30	NA	NA	35.55	36.50	090
50100		A	Revise kidney blood vessels	16.09	NA	NA	9.74	10.11	1.64	NA	NA	27.47	27.84	090
50120		A	Exploration of kidney	15.91	NA	NA	8.51	9.34	1.04	NA	NA	25.46	26.29	090
50125		A	Explore and drain kidney	16.52	NA	NA	8.64	9.45	1.07	NA	NA	26.23	27.04	090
50130		A	Removal of kidney stone	17.29	NA	NA	8.81	10.08	1.04	NA	NA	27.14	28.41	090
50135		A	Exploration of kidney	19.18	NA	NA	9.41	11.68	1.18	NA	NA	29.77	32.04	090
50200		A	Biopsy of kidney	2.63	NA	NA	0.94	1.41	0.12	NA	NA	3.69	4.16	000
50205		A	Biopsy of kidney	11.31	NA	NA	6.41	6.34	0.94	NA	NA	18.66	18.59	090
50220		A	Removal of kidney	17.15	NA	NA	8.97	10.34	1.16	NA	NA	27.28	28.65	090
50225		A	Removal of kidney	20.23	NA	NA	9.89	11.90	1.26	NA	NA	31.38	33.39	090
50230		A	Removal of kidney	22.07	NA	NA	10.47	12.85	1.35	NA	NA	33.89	36.27	090
50234		A	Removal of kidney & ureter	22.40	NA	NA	10.54	12.42	1.37	NA	NA	34.31	36.19	090
50236		A	Removal of kidney & ureter	24.86	NA	NA	13.52	14.95	1.50	NA	NA	39.88	41.31	090
50240		A	Partial removal of kidney	22.00	NA	NA	12.56	13.76	1.36	NA	NA	35.92	37.12	090
50280		A	Removal of kidney lesion	15.67	NA	NA	8.32	9.19	0.99	NA	NA	24.98	25.85	090
50290		A	Removal of kidney lesion	14.73	NA	NA	8.19	8.55	1.11	NA	NA	24.03	24.39	090
50300		X	Removal of donor kidney	0.00	0.00	0.00	0.00	0.00	0.00	0.00	0.00	0.00	0.00	XXX
50320		A	Removal of donor kidney	22.21	NA	NA	10.49	12.34	1.78	NA	NA	34.48	36.33	090
50340		A	Removal of kidney	12.15	NA	NA	8.77	9.97	1.15	NA	NA	22.07	23.27	090
50360		A	Transplantation of kidney	31.53	NA	NA	17.74	19.94	2.97	NA	NA	52.24	54.44	090
50365		A	Transplantation of kidney	36.81	NA	NA	21.34	24.34	3.51	NA	NA	61.66	64.66	090
50370		A	Remove transplanted kidney	13.72	NA	NA	9.66	10.25	1.26	NA	NA	24.64	25.23	090

[1] CPT codes and descriptions only are copyright 2000 American Medical Association. All Rights Reserved. Applicable FARS/DFARS Apply.
[2] Copyright 1994 American Dental Association. All rights reserved.
[3] + Indicates RVUs are not used for Medicare payment.
[4] PE RVUs = Practice Expense Relative Value Units.

ADDENDUM B.—RELATIVE VALUE UNITS (RVU'S) AND RELATED INFORMATION—Continued

CPT[1]/ HCPCS[2]	MOD	Status	Description	Physician Work RVUs[3]	Fully Implemented Non-Facility PE RVUs	Year 2001 Transitional Non-Facility PE RVUs	Fully Implemented Facility PE RVUs	Year 2001 Transitional Facility PE RVUs	Mal-Practice RVUs	Fully Implemented Non-Facility Total	Year 2001 Transitional Non-Facility Total	Fully Implemented Facility Total	Year 2001 Transitional Facility Total	Global
50380		A	Reimplantation of kidney	20.76	NA	NA	13.88	13.16	1.80	NA	NA	36.44	35.72	090
50390		A	Drainage of kidney lesion	1.96	NA	NA	0.69	0.98	0.09	NA	NA	2.74	3.03	000
50392		A	Insert kidney drain	3.38	NA	NA	1.19	1.53	0.15	NA	NA	4.72	5.06	000
50393		A	Insert ureteral tube	4.16	NA	NA	1.46	1.91	0.18	NA	NA	5.80	6.25	000
50394		A	Injection for kidney x-ray	0.76	13.29	10.12	0.27	0.35	0.04	14.09	10.92	1.07	1.15	000
50395		A	Create passage to kidney	3.38	NA	NA	1.18	1.79	0.16	NA	NA	4.72	5.33	000
50396		A	Measure kidney pressure	2.09	NA	NA	0.88	0.80	0.10	NA	NA	3.07	2.99	000
50398		A	Change kidney tube	1.46	1.30	1.12	0.51	0.53	0.07	2.83	2.65	2.04	2.06	000
50400		A	Revision of kidney/ureter	19.50	NA	NA	9.59	10.90	1.21	NA	NA	30.30	31.61	090
50405		A	Revision of kidney/ureter	23.93	NA	NA	12.67	14.19	1.45	NA	NA	38.05	39.57	090
50500		A	Repair of kidney wound	19.57	NA	NA	11.12	11.72	1.45	NA	NA	32.14	32.74	090
50520		A	Close kidney-skin fistula	17.23	NA	NA	10.45	10.64	1.26	NA	NA	28.94	29.13	090
50525		A	Repair renal-abdomen fistula	22.27	NA	NA	12.53	12.82	1.51	NA	NA	36.31	36.60	090
50526		A	Repair renal-abdomen fistula	24.02	NA	NA	15.41	13.56	1.62	NA	NA	41.05	39.20	090
50540		A	Revision of horseshoe kidney	19.93	NA	NA	11.82	12.50	1.28	NA	NA	33.03	33.71	090
50541		A	Laparo ablate renal cyst	16.00	NA	NA	6.61	6.61	0.99	NA	NA	23.60	23.60	090
50544		A	Laparoscopy, pyeloplasty	22.40	NA	NA	8.78	8.78	1.41	NA	NA	32.59	32.59	090
50545		A	Laparo radical nephrectomy	24.00	NA	NA	9.41	9.41	1.81	NA	NA	35.22	35.22	090
50546		A	Laparoscopic nephrectomy	20.48	NA	NA	8.31	8.31	1.37	NA	NA	30.16	30.16	090
50547		A	Laparo removal donor kidney	25.50	NA	NA	10.99	10.99	2.04	NA	NA	38.53	38.53	090
50548		A	Laparo remove k/ureter	24.40	NA	NA	9.44	9.44	1.49	NA	NA	35.33	35.33	090
50549		C	Laparoscope proc, renal	0.00	0.00	0.00	0.00	0.00	0.00	0.00	0.00	0.00	0.00	YYY
50551		A	Kidney endoscopy	5.60	4.54	4.00	1.86	1.99	0.33	10.47	9.93	7.79	7.92	000
50553		A	Kidney endoscopy	5.99	15.58	12.14	2.06	2.00	0.35	21.92	18.48	8.40	8.34	000
50555		A	Kidney endoscopy & biopsy	6.53	18.16	14.90	2.20	2.93	0.38	25.07	21.81	9.11	9.84	000
50557		A	Kidney endoscopy & treatment	6.62	18.28	14.99	2.21	2.94	0.39	25.29	22.00	9.22	9.95	000
50559		A	Renal endoscopy/radiotracer	6.78	NA	NA	2.37	2.14	0.27	NA	NA	9.42	9.19	000
50561		A	Kidney endoscopy & treatment	7.59	16.42	13.71	2.55	3.30	0.44	24.45	21.74	10.58	11.33	000
50570		A	Kidney endoscopy	9.54	NA	NA	3.19	2.79	0.56	NA	NA	13.29	12.89	000
50572		A	Kidney endoscopy	10.35	NA	NA	3.44	4.55	0.64	NA	NA	14.43	15.54	000
50574		A	Kidney endoscopy & biopsy	11.02	NA	NA	3.67	4.67	0.65	NA	NA	15.34	16.34	000
50575		A	Kidney endoscopy	13.98	NA	NA	4.67	6.20	0.84	NA	NA	19.49	21.02	000
50576		A	Kidney endoscopy & treatment	10.99	NA	NA	3.64	5.09	0.66	NA	NA	15.29	16.74	000
50578		A	Renal endoscopy/radiotracer	11.35	NA	NA	3.78	3.86	0.67	NA	NA	15.80	15.88	000
50580		A	Kidney endoscopy & treatment	11.86	NA	NA	3.97	3.95	0.70	NA	NA	16.53	16.51	000
50590		A	Fragmenting of kidney stone	9.09	10.21	10.37	5.01	6.47	0.54	19.84	20.00	14.64	16.10	090
50600		A	Exploration of ureter	15.84	NA	NA	8.38	8.92	0.99	NA	NA	25.21	25.75	090
50605		A	Insert ureteral support	15.46	NA	NA	8.64	8.14	1.13	NA	NA	25.23	24.73	090
50610		A	Removal of ureter stone	15.92	NA	NA	8.87	9.85	1.08	NA	NA	25.87	26.85	090
50620		A	Removal of ureter stone	15.16	NA	NA	8.00	9.12	0.91	NA	NA	24.07	25.19	090
50630		A	Removal of ureter stone	14.94	NA	NA	8.09	9.52	0.90	NA	NA	23.93	25.36	090
50650		A	Removal of ureter	17.41	NA	NA	9.15	10.14	1.07	NA	NA	27.63	28.62	090
50660		A	Removal of ureter	19.55	NA	NA	9.93	10.84	1.19	NA	NA	30.67	31.58	090
50684		A	Injection for ureter x-ray	0.76	13.74	10.44	0.26	0.33	0.04	14.54	11.24	1.06	1.13	000
50686		A	Measure ureter pressure	1.51	4.64	3.58	0.70	0.63	0.09	6.24	5.18	2.30	2.23	000
50688		A	Change of ureter tube	1.17	NA	NA	1.71	1.39	0.06	NA	NA	2.94	2.62	010
50690		A	Injection for ureter x-ray	1.16	14.07	10.64	0.40	0.39	0.06	15.29	11.86	1.62	1.61	000
50700		A	Revision of ureter	15.21	NA	NA	8.84	10.04	0.86	NA	NA	24.91	26.11	090
50715		A	Release of ureter	18.90	NA	NA	11.64	11.78	1.68	NA	NA	32.22	32.36	090
50722		A	Release of ureter	16.35	NA	NA	9.16	9.67	1.41	NA	NA	26.92	27.43	090
50725		A	Release/revise ureter	18.49	NA	NA	10.02	10.79	1.44	NA	NA	29.95	30.72	090
50727		A	Revise ureter	8.18	NA	NA	6.12	6.05	0.51	NA	NA	14.81	14.74	090
50728		A	Revise ureter	12.02	NA	NA	7.71	7.93	0.88	NA	NA	20.61	20.83	090
50740		A	Fusion of ureter & kidney	18.42	NA	NA	9.42	10.60	1.49	NA	NA	29.33	30.51	090
50750		A	Fusion of ureter & kidney	19.51	NA	NA	10.11	11.39	1.24	NA	NA	30.86	32.14	090
50760		A	Fusion of ureters	18.42	NA	NA	9.65	10.89	1.25	NA	NA	29.32	30.56	090
50770		A	Splicing of ureters	19.51	NA	NA	9.86	11.53	1.25	NA	NA	30.62	32.29	090
50780		A	Reimplant ureter in bladder	18.36	NA	NA	9.56	10.91	1.20	NA	NA	29.12	30.47	090
50782		A	Reimplant ureter in bladder	19.54	NA	NA	11.02	12.00	1.13	NA	NA	31.69	32.67	090
50783		A	Reimplant ureter in bladder	20.55	NA	NA	10.55	11.65	1.35	NA	NA	32.45	33.55	090
50785		A	Reimplant ureter in bladder	20.52	NA	NA	10.27	11.89	1.30	NA	NA	32.09	33.71	090
50800		A	Implant ureter in bowel	14.52	NA	NA	9.27	10.93	0.92	NA	NA	24.71	26.37	090
50810		A	Fusion of ureter & bowel	20.05	NA	NA	12.75	12.97	1.78	NA	NA	34.58	34.80	090
50815		A	Urine shunt to bowel	19.93	NA	NA	11.31	13.84	1.31	NA	NA	32.55	35.08	090
50820		A	Construct bowel bladder	21.89	NA	NA	11.14	13.50	1.38	NA	NA	34.41	36.77	090
50825		A	Construct bowel bladder	28.18	NA	NA	14.53	19.18	1.81	NA	NA	44.52	49.17	090
50830		A	Revise urine flow	31.28	NA	NA	15.27	17.13	2.20	NA	NA	48.75	50.61	090
50840		A	Replace ureter by bowel	20.00	NA	NA	11.48	12.23	1.26	NA	NA	32.74	33.49	090
50845		A	Appendico-vesicostomy	20.89	NA	NA	9.63	10.99	1.26	NA	NA	31.78	33.14	090
50860		A	Transplant ureter to skin	15.36	NA	NA	8.56	9.38	1.01	NA	NA	24.93	25.75	090
50900		A	Repair of ureter	13.62	NA	NA	7.81	8.57	0.98	NA	NA	22.41	23.17	090
50920		A	Closure ureter/skin fistula	14.33	NA	NA	8.70	9.11	0.84	NA	NA	23.87	24.28	090
50930		A	Closure ureter/bowel fistula	18.72	NA	NA	9.73	10.69	1.57	NA	NA	30.02	30.98	090
50940		A	Release of ureter	14.51	NA	NA	8.08	8.75	1.04	NA	NA	23.63	24.30	090
50945		A	Laparoscopy ureterolithotomy	17.00	NA	NA	7.36	7.36	1.15	NA	NA	25.51	25.51	090
50947		A	Laparo new ureter/bladder	24.50	NA	NA	11.62	11.62	1.84	NA	NA	37.96	37.96	090
50948		A	Laparo new ureter/bladder	22.50	NA	NA	10.51	10.51	1.70	NA	NA	34.71	34.71	090
50949		C	Laparoscope proc, ureter	0.00	0.00	0.00	0.00	0.00	0.00	0.00	0.00	0.00	0.00	YYY
50951		A	Endoscopy of ureter	5.84	4.94	4.16	1.96	1.92	0.35	11.13	10.35	8.15	8.11	000
50953		A	Endoscopy of ureter	6.24	17.47	13.55	2.08	2.01	0.37	24.08	20.16	8.69	8.62	000
50955		A	Ureter endoscopy & biopsy	6.75	18.19	14.34	2.29	2.41	0.38	25.32	21.47	9.42	9.54	000
50957		A	Ureter endoscopy & treatment	6.79	17.76	14.00	2.28	2.39	0.40	24.95	21.19	9.47	9.58	000
50959		A	Ureter endoscopy & tracer	4.40	NA	NA	1.55	2.08	0.18	NA	NA	6.13	6.66	000

[1] CPT codes and descriptions only are copyright 2000 American Medical Association. All Rights Reserved. Applicable FARS/DFARS Apply.
[2] Copyright 1994 American Dental Association. All rights reserved.
[3] + Indicates RVUs are not used for Medicare payment.
[4] PE RVUs = Practice Expense Relative Value Units.

ADDENDUM B.—RELATIVE VALUE UNITS (RVU'S) AND RELATED INFORMATION—Continued

CPT[1]/ HCPCS[2]	MOD	Status	Description	Physician Work RVUs[3]	Fully Implemented Non-Facility PE RVUs	Year 2001 Transitional Non-Facility PE RVUs	Fully Implemented Facility PE RVUs	Year 2001 Transitional Facility PE RVUs	Mal-Practice RVUs	Fully Implemented Non-Facility Total	Year 2001 Transitional Non-Facility Total	Fully Implemented Facility Total	Year 2001 Transitional Facility Total	Global
50961	.....	A	Ureter endoscopy & treatment	6.05	21.84	17.09	2.05	2.25	0.35	28.24	23.49	8.45	8.65	000
50970	.....	A	Ureter endoscopy	7.14	NA	NA	2.39	3.20	0.43	NA	NA	9.96	10.77	000
50972	.....	A	Ureter endoscopy & catheter	6.89	NA	NA	2.35	2.18	0.39	NA	NA	9.63	9.46	000
50974	.....	A	Ureter endoscopy & biopsy	9.17	NA	NA	3.01	4.16	0.53	NA	NA	12.71	13.86	000
50976	.....	A	Ureter endoscopy & treatment	9.04	NA	NA	3.01	4.00	0.53	NA	NA	12.58	13.57	000
50978	.....	A	Ureter endoscopy & tracer	5.10	NA	NA	1.75	2.41	0.30	NA	NA	7.15	7.81	000
50980	.....	A	Ureter endoscopy & treatment	6.85	NA	NA	2.30	2.58	0.41	NA	NA	9.56	9.84	000
51000	.....	A	Drainage of bladder	0.78	1.88	1.54	0.25	0.32	0.05	2.71	2.37	1.08	1.15	000
51005	.....	A	Drainage of bladder	1.02	3.15	2.49	0.35	0.39	0.08	4.25	3.59	1.45	1.49	000
51010	.....	A	Drainage of bladder	3.53	6.75	5.33	1.82	1.63	0.23	10.51	9.09	5.58	5.39	010
51020	.....	A	Incise & treat bladder	6.71	NA	NA	5.29	5.83	0.42	NA	NA	12.42	12.96	090
51030	.....	A	Incise & treat bladder	6.77	NA	NA	5.34	5.24	0.42	NA	NA	12.53	12.43	090
51040	.....	A	Incise & drain bladder	4.40	NA	NA	4.11	4.40	0.27	NA	NA	8.78	9.07	090
51045	.....	A	Incise bladder/drain ureter	6.77	NA	NA	5.59	5.54	0.47	NA	NA	12.83	12.78	090
51050	.....	A	Removal of bladder stone	6.92	NA	NA	4.90	5.61	0.42	NA	NA	12.24	12.95	090
51060	.....	A	Removal of ureter stone	8.85	NA	NA	6.04	7.17	0.54	NA	NA	15.43	16.56	090
51065	.....	A	Removal of ureter stone	8.85	NA	NA	5.89	6.34	0.53	NA	NA	15.27	15.72	090
51080	.....	A	Drainage of bladder abscess	5.96	NA	NA	5.32	5.40	0.35	NA	NA	11.63	11.71	090
51500	.....	A	Removal of bladder cyst	10.14	NA	NA	5.95	6.32	0.88	NA	NA	16.97	17.34	090
51520	.....	A	Removal of bladder lesion	9.29	NA	NA	6.08	6.88	0.58	NA	NA	15.95	16.75	090
51525	.....	A	Removal of bladder lesion	13.97	NA	NA	7.68	8.66	0.85	NA	NA	22.50	23.48	090
51530	.....	A	Removal of bladder lesion	12.38	NA	NA	7.26	7.96	0.82	NA	NA	20.46	21.16	090
51535	.....	A	Repair of ureter lesion	12.57	NA	NA	7.57	7.76	0.90	NA	NA	21.04	21.23	090
51550	.....	A	Partial removal of bladder	15.66	NA	NA	8.32	9.15	1.05	NA	NA	25.03	25.86	090
51555	.....	A	Partial removal of bladder	21.23	NA	NA	10.57	11.26	1.37	NA	NA	33.17	33.86	090
51565	.....	A	Revise bladder & ureter(s)	21.62	NA	NA	11.06	12.59	1.40	NA	NA	34.08	35.61	090
51570	.....	A	Removal of bladder	24.24	NA	NA	12.23	13.42	1.59	NA	NA	38.06	39.25	090
51575	.....	A	Removal of bladder & nodes	30.45	NA	NA	14.70	17.23	1.88	NA	NA	47.03	49.56	090
51580	.....	A	Remove bladder/revise tract	31.08	NA	NA	15.23	16.84	1.94	NA	NA	48.25	49.86	090
51585	.....	A	Removal of bladder & nodes	35.23	NA	NA	16.48	19.18	2.18	NA	NA	53.89	56.59	090
51590	.....	A	Remove bladder/revise tract	32.66	NA	NA	15.38	18.19	2.01	NA	NA	50.05	52.86	090
51595	.....	A	Remove bladder/revise tract	37.14	NA	NA	16.80	21.77	2.23	NA	NA	56.17	61.14	090
51596	.....	A	Remove bladder/create pouch	39.52	NA	NA	18.04	23.00	2.39	NA	NA	59.95	64.91	090
51597	.....	A	Removal of pelvic structures	38.35	NA	NA	17.84	21.69	2.49	NA	NA	58.68	62.53	090
51600	.....	A	Injection for bladder x-ray	0.88	14.30	10.80	0.31	0.31	0.04	15.22	11.72	1.23	1.23	000
51605	.....	A	Preparation for bladder xray	0.64	15.09	11.40	0.22	0.25	0.04	15.77	12.08	0.90	0.93	000
51610	.....	A	Injection for bladder x-ray	1.05	14.73	11.12	0.36	0.34	0.05	15.83	12.22	1.46	1.44	000
51700	.....	A	Irrigation of bladder	0.88	3.63	2.78	0.33	0.28	0.05	4.56	3.71	1.26	1.21	000
51705	.....	A	Change of bladder tube	1.02	2.45	1.94	1.23	0.98	0.06	3.53	3.02	2.31	2.06	010
51710	.....	A	Change of bladder tube	1.49	4.60	3.61	1.37	1.11	0.09	6.18	5.19	2.95	2.69	010
51715	.....	A	Endoscopic injection/implant	3.74	4.09	3.79	1.27	1.67	0.24	8.07	7.77	5.25	5.65	000
51720	.....	A	Treatment of bladder lesion	1.96	3.93	3.07	0.66	0.56	0.12	6.01	5.15	2.74	2.64	000
51725	.....	A	Simple cystometrogram	1.51	5.33	4.27	5.33	4.27	0.13	6.97	5.91	6.97	5.91	000
51725	26	A	Simple cystometrogram	1.51	0.51	0.55	0.51	0.55	0.10	2.12	2.16	2.12	2.16	000
51725	TC	A	Simple cystometrogram	0.00	4.82	3.72	NA	NA	0.03	4.85	3.75	NA	NA	000
51726	.....	A	Complex cystometrogram	1.71	4.20	3.51	4.20	3.51	0.15	6.06	5.37	6.06	5.37	000
51726	26	A	Complex cystometrogram	1.71	0.58	0.66	0.58	0.66	0.11	2.40	2.48	2.40	2.48	000
51726	TC	A	Complex cystometrogram	0.00	3.62	2.85	NA	NA	0.04	3.66	2.89	NA	NA	000
51736	.....	A	Urine flow measurement	0.61	0.99	0.86	0.99	0.86	0.05	1.65	1.52	1.65	1.52	000
51736	26	A	Urine flow measurement	0.61	0.21	0.23	0.21	0.23	0.04	0.86	0.88	0.86	0.88	000
51736	TC	A	Urine flow measurement	0.00	0.78	0.63	NA	NA	0.01	0.79	0.64	NA	NA	000
51741	.....	A	Electro-uroflowmetry, first	1.14	1.74	1.46	1.74	1.46	0.09	2.97	2.69	2.97	2.69	000
51741	26	A	Electro-uroflowmetry, first	1.14	0.39	0.39	0.39	0.39	0.07	1.60	1.60	1.60	1.60	000
51741	TC	A	Electro-uroflowmetry, first	0.00	1.35	1.07	NA	NA	0.02	1.37	1.09	NA	NA	000
51772	.....	A	Urethra pressure profile	1.61	4.29	3.48	4.29	3.48	0.16	6.06	5.25	6.06	5.25	000
51772	26	A	Urethra pressure profile	1.61	0.57	0.57	0.57	0.57	0.12	2.30	2.30	2.30	2.30	000
51772	TC	A	Urethra pressure profile	0.00	3.72	2.91	NA	NA	0.04	3.76	2.95	NA	NA	000
51784	.....	A	Anal/urinary muscle study	1.53	3.02	2.55	3.02	2.55	0.13	4.68	4.21	4.68	4.21	000
51784	26	A	Anal/urinary muscle study	1.53	0.52	0.57	0.52	0.57	0.10	2.15	2.20	2.15	2.20	000
51784	TC	A	Anal/urinary muscle study	0.00	2.50	1.98	NA	NA	0.03	2.53	2.01	NA	NA	000
51785	.....	A	Anal/urinary muscle study	1.53	3.06	2.58	3.06	2.58	0.12	4.71	4.23	4.71	4.23	000
51785	26	A	Anal/urinary muscle study	1.53	0.52	0.57	0.52	0.57	0.09	2.14	2.19	2.14	2.19	000
51785	TC	A	Anal/urinary muscle study	0.00	2.54	2.01	NA	NA	0.03	2.57	2.04	NA	NA	000
51792	.....	A	Urinary reflex study	1.10	1.83	1.90	1.83	1.90	0.20	3.13	3.20	3.13	3.20	000
51792	26	A	Urinary reflex study	1.10	0.44	0.49	0.44	0.49	0.09	1.63	1.68	1.63	1.68	000
51792	TC	A	Urinary reflex study	0.00	1.39	1.41	NA	NA	0.11	1.50	1.52	NA	NA	000
51795	.....	A	Urine voiding pressure study	1.53	4.39	3.69	4.39	3.69	0.18	6.10	5.40	6.10	5.40	000
51795	26	A	Urine voiding pressure study	1.53	0.52	0.55	0.52	0.55	0.10	2.15	2.18	2.15	2.18	000
51795	TC	A	Urine voiding pressure study	0.00	3.87	3.14	NA	NA	0.08	3.95	3.22	NA	NA	000
51797	.....	A	Intraabdominal pressure test	1.60	4.38	3.55	4.38	3.55	0.14	6.12	5.29	6.12	5.29	000
51797	26	A	Intraabdominal pressure test	1.60	0.55	0.55	0.55	0.55	0.10	2.25	2.25	2.25	2.25	000
51797	TC	A	Intraabdominal pressure test	0.00	3.83	3.00	NA	NA	0.04	3.87	3.04	NA	NA	000
51800	.....	A	Revision of bladder/urethra	17.42	NA	NA	9.12	10.10	1.17	NA	NA	27.71	28.69	090
51820	.....	A	Revision of urinary tract	17.89	NA	NA	10.45	9.84	1.45	NA	NA	29.79	29.18	090
51840	.....	A	Attach bladder/urethra	10.71	NA	NA	6.41	7.31	0.87	NA	NA	17.99	18.89	090
51841	.....	A	Attach bladder/urethra	13.03	NA	NA	8.03	9.01	1.04	NA	NA	22.10	23.08	090
51845	.....	A	Repair bladder neck	9.73	NA	NA	6.40	7.70	0.62	NA	NA	16.75	18.05	090
51860	.....	A	Repair of bladder wound	12.02	NA	NA	7.57	7.75	0.89	NA	NA	20.48	20.66	090
51865	.....	A	Repair of bladder wound	15.04	NA	NA	8.46	9.32	1.01	NA	NA	24.51	25.37	090
51880	.....	A	Repair of bladder opening	7.66	NA	NA	5.43	5.42	0.54	NA	NA	13.63	13.62	090
51900	.....	A	Repair bladder/vagina lesion	12.97	NA	NA	7.81	9.02	0.87	NA	NA	21.65	22.86	090
51920	.....	A	Close bladder-uterus fistula	11.81	NA	NA	7.48	7.65	0.86	NA	NA	20.15	20.32	090
51925	.....	A	Hysterectomy/bladder repair	15.58	NA	NA	8.90	9.41	1.48	NA	NA	25.96	26.47	090

[1] CPT codes and descriptions only are copyright 2000 American Medical Association. All Rights Reserved. Applicable FARS/DFARS Apply.
[2] Copyright 1994 American Dental Association. All rights reserved.
[3] + Indicates RVUs are not used for Medicare payment.
[4] PE RVUs = Practice Expense Relative Value Units.

ADDENDUM B.—RELATIVE VALUE UNITS (RVU'S) AND RELATED INFORMATION—Continued

CPT[1]/ HCPCS[2]	MOD	Status	Description	Physician Work RVUs[3]	Fully Implemented Non-Facility PE RVUs	Year 2001 Transitional Non-Facility PE RVUs	Fully Implemented Facility PE RVUs	Year 2001 Transitional Facility PE RVUs	Mal-Practice RVUs	Fully Implemented Non-Facility Total	Year 2001 Transitional Non-Facility Total	Fully Implemented Facility Total	Year 2001 Transitional Facility Total	Global
51940		A	Correction of bladder defect	28.43	NA	NA	14.24	15.82	1.97	NA	NA	44.64	46.22	090
51960		A	Revision of bladder & bowel	23.01	NA	NA	12.44	15.14	1.41	NA	NA	36.86	39.56	090
51980		A	Construct bladder opening	11.36	NA	NA	6.95	7.24	0.74	NA	NA	19.05	19.34	090
51990		A	Laparo urethral suspension	12.50	NA	NA	6.28	6.28	1.02	NA	NA	19.80	19.80	090
51992		A	Laparo sling operation	14.01	NA	NA	6.39	6.39	0.93	NA	NA	21.33	21.33	090
52000		A	Cystoscopy	2.01	3.14	2.72	0.67	0.68	0.12	5.27	4.85	2.80	2.81	000
52005		A	Cystoscopy & ureter catheter	2.37	4.86	4.24	0.79	1.19	0.15	7.38	6.76	3.31	3.71	000
52007		A	Cystoscopy and biopsy	3.02	NA	NA	1.01	1.52	0.18	NA	NA	4.21	4.72	000
52010		A	Cystoscopy & duct catheter	3.02	5.21	4.42	1.01	1.02	0.18	8.41	7.62	4.21	4.22	000
52204		A	Cystoscopy	2.37	5.57	4.82	0.79	1.24	0.15	8.09	7.34	3.31	3.76	000
52214		A	Cystoscopy and treatment	3.71	5.94	5.22	1.24	1.69	0.22	9.87	9.15	5.17	5.62	000
52224		A	Cystoscopy and treatment	3.14	5.79	5.13	1.05	1.58	0.18	9.11	8.45	4.37	4.90	000
52234		A	Cystoscopy and treatment	4.63	6.70	6.30	1.55	2.44	0.27	11.60	11.20	6.45	7.34	000
52235		A	Cystoscopy and treatment	5.45	6.99	6.87	1.82	2.99	0.32	12.76	12.64	7.59	8.76	000
52240		A	Cystoscopy and treatment	9.72	8.41	9.20	3.24	5.32	0.58	18.71	19.50	13.54	15.62	000
52250		A	Cystoscopy and radiotracer	4.50	NA	NA	1.50	1.90	0.27	NA	NA	6.27	6.67	000
52260		A	Cystoscopy and treatment	3.92	NA	NA	1.31	1.56	0.23	NA	NA	5.46	5.71	000
52265		A	Cystoscopy and treatment	2.94	3.55	3.03	0.99	0.93	0.18	6.67	6.15	4.11	4.05	000
52270		A	Cystoscopy & revise urethra	3.37	6.32	5.68	1.13	1.79	0.20	9.89	9.25	4.70	5.36	000
52275		A	Cystoscopy & revise urethra	4.70	6.81	6.04	1.56	2.10	0.28	11.79	11.02	6.54	7.08	000
52276		A	Cystoscopy and treatment	5.00	6.92	6.43	1.66	2.49	0.30	12.22	11.73	6.96	7.79	000
52277		A	Cystoscopy and treatment	6.17	NA	NA	2.10	2.88	0.38	NA	NA	8.65	9.43	000
52281		A	Cystoscopy and treatment	2.80	3.56	3.30	0.93	1.01	0.17	6.53	6.27	3.90	3.98	000
52282		A	Cystoscopy, implant stent	6.40	7.07	6.55	2.14	2.85	0.38	13.85	13.33	8.92	9.63	000
52283		A	Cystoscopy and treatment	3.74	6.21	5.07	1.25	1.35	0.22	10.17	9.03	5.21	5.31	000
52285		A	Cystoscopy and treatment	3.61	6.41	5.61	1.21	1.31	0.22	10.24	9.44	5.04	5.14	000
52290		A	Cystoscopy and treatment	4.59	NA	NA	1.54	1.79	0.27	NA	NA	6.40	6.65	000
52300		A	Cystoscopy and treatment	5.31	NA	NA	1.77	2.27	0.32	NA	NA	7.40	7.90	000
52301		A	Cystoscopy and treatment	5.51	NA	NA	1.78	2.28	0.39	NA	NA	7.68	8.18	000
52305		A	Cystoscopy and treatment	5.31	NA	NA	1.77	2.28	0.31	NA	NA	7.39	7.90	000
52310		A	Cystoscopy and treatment	2.81	13.89	11.23	0.94	1.52	0.17	16.87	14.21	3.92	4.50	000
52315		A	Cystoscopy and treatment	5.21	14.86	12.25	1.74	2.41	0.31	20.38	17.77	7.26	7.93	000
52317		A	Remove bladder stone	6.72	25.37	20.71	2.24	3.36	0.40	32.49	27.83	9.36	10.48	000
52318		A	Remove bladder stone	9.19	NA	NA	3.07	4.44	0.54	NA	NA	12.80	14.17	000
52320		A	Cystoscopy and treatment	4.70	NA	NA	1.57	2.50	0.28	NA	NA	6.55	7.48	000
52325		A	Cystoscopy, stone removal	6.16	NA	NA	2.05	3.38	0.37	NA	NA	8.58	9.91	000
52327		A	Cystoscopy, inject material	5.19	NA	NA	1.75	2.31	0.32	NA	NA	7.26	7.82	000
52330		A	Cystoscopy and treatment	5.04	18.77	15.02	1.68	2.20	0.30	24.11	20.36	7.02	7.54	000
52332		A	Cystoscopy and treatment	2.83	28.13	21.97	0.95	1.56	0.17	31.13	24.97	3.95	4.56	000
52334		A	Create passage to kidney	4.83	NA	NA	1.62	2.12	0.28	NA	NA	6.73	7.23	000
52335		D	Endoscopy of urinary tract	0.00	NA	NA	0.00	0.00	0.00	NA	NA	0.00	0.00	000
52336		D	Cystoscopy, stone removal	0.00	NA	NA	0.00	0.00	0.00	NA	NA	0.00	0.00	000
52337		D	Cystoscopy, stone removal	0.00	NA	NA	0.00	0.00	0.00	NA	NA	0.00	0.00	000
52338		D	Cystoscopy and treatment	0.00	NA	NA	0.00	0.00	0.00	NA	NA	0.00	0.00	000
52339		D	Cystoscopy and treatment	0.00	NA	NA	0.00	0.00	0.00	NA	NA	0.00	0.00	000
52340		D	Cystoscopy and treatment	0.00	NA	NA	0.00	0.00	0.00	NA	NA	0.00	0.00	090
52341		A	Cysto w/ureter stricture tx	6.00	NA	NA	2.40	2.40	0.34	NA	NA	8.74	8.74	000
52342		A	Cysto w/up stricture tx	6.50	NA	NA	2.60	2.60	0.36	NA	NA	9.46	9.46	000
52343		A	Cysto w/renal stricture tx	7.20	NA	NA	2.88	2.88	0.40	NA	NA	10.48	10.48	000
52344		A	Cysto/uretero, stone remove	7.70	NA	NA	3.08	3.08	0.42	NA	NA	11.20	11.20	000
52345		A	Cysto/uretero w/up stricture	8.20	NA	NA	3.28	3.28	0.46	NA	NA	11.94	11.94	000
52346		A	Cystouretero w/renal strict	9.23	NA	NA	3.69	3.69	0.51	NA	NA	13.43	13.43	000
52351		A	Cystouretro & or pyeloscope	5.86	NA	NA	1.96	2.74	0.32	NA	NA	8.14	8.92	000
52352		A	Cystouretro w/stone remove	6.88	NA	NA	2.30	3.78	0.38	NA	NA	9.56	11.04	000
52353		A	Cystouretero w/lithotripsy	7.97	NA	NA	2.66	4.38	0.44	NA	NA	11.07	12.79	000
52354		A	Cystouretero w/biopsy	7.34	NA	NA	2.45	3.44	0.41	NA	NA	10.20	11.19	000
52355		A	Cystouretero w/excise tumor	8.82	NA	NA	2.95	3.82	0.50	NA	NA	12.27	13.14	000
52400		A	Cystouretero w/congen repr	9.68	NA	NA	5.36	5.42	0.53	NA	NA	15.57	15.63	090
52450		A	Incision of prostate	7.64	NA	NA	6.05	5.89	0.46	NA	NA	14.15	13.99	090
52500		A	Revision of bladder neck	8.47	NA	NA	6.31	6.75	0.50	NA	NA	15.28	15.72	090
52510		A	Dilation prostatic urethra	6.72	NA	NA	5.39	6.05	0.40	NA	NA	12.51	13.17	090
52601		A	Prostatectomy (TURP)	12.37	NA	NA	7.63	8.94	0.74	NA	NA	20.74	22.05	090
52606		A	Control postop bleeding	8.13	NA	NA	5.82	5.27	0.49	NA	NA	14.44	13.89	090
52612		A	Prostatectomy, first stage	7.98	NA	NA	6.17	7.01	0.48	NA	NA	14.63	15.47	090
52614		A	Prostatectomy, second stage	6.84	NA	NA	5.77	6.25	0.41	NA	NA	13.02	13.50	090
52620		A	Remove residual prostate	6.61	NA	NA	5.71	5.73	0.39	NA	NA	12.71	12.73	090
52630		A	Remove prostate regrowth	7.26	NA	NA	5.93	6.62	0.43	NA	NA	13.62	14.31	090
52640		A	Relieve bladder contracture	6.62	NA	NA	5.29	5.71	0.39	NA	NA	12.30	12.72	090
52647		A	Laser surgery of prostate	10.36	56.13	45.19	5.26	7.04	0.61	67.10	56.16	16.23	18.01	090
52648		A	Laser surgery of prostate	11.21	NA	NA	7.26	8.67	0.66	NA	NA	19.13	20.54	090
52700		A	Drainage of prostate abscess	6.80	NA	NA	5.85	5.28	0.41	NA	NA	13.06	12.49	090
53000		A	Incision of urethra	2.28	7.09	5.80	2.42	2.29	0.13	9.50	8.21	4.83	4.70	010
53010		A	Incision of urethra	3.64	NA	NA	3.89	3.87	0.20	NA	NA	7.73	7.71	090
53020		A	Incision of urethra	1.77	3.78	3.06	0.65	0.71	0.11	5.66	4.94	2.53	2.59	000
53025		A	Incision of urethra	1.13	4.32	3.46	0.43	0.54	0.07	5.52	4.66	1.63	1.74	000
53040		A	Drainage of urethra abscess	6.40	12.36	9.77	7.76	6.32	0.41	19.17	16.58	14.57	13.13	090
53060		A	Drainage of urethra abscess	2.63	5.98	4.62	2.92	2.33	0.23	8.84	7.48	5.78	5.19	010
53080		A	Drainage of urinary leakage	6.29	NA	NA	7.62	6.80	0.42	NA	NA	14.33	13.51	090
53085		A	Drainage of urinary leakage	10.27	NA	NA	9.13	8.68	0.67	NA	NA	20.07	19.62	090
53200		A	Biopsy of urethra	2.59	5.09	4.12	0.95	1.01	0.17	7.85	6.88	3.71	3.77	000
53210		A	Removal of urethra	12.57	NA	NA	7.58	7.49	0.81	NA	NA	20.96	20.87	090
53215		A	Removal of urethra	15.58	NA	NA	8.32	8.95	0.93	NA	NA	24.83	25.46	090
53220		A	Treatment of urethra lesion	7.00	NA	NA	5.21	5.20	0.44	NA	NA	12.65	12.64	090

[1] CPT codes and descriptions only are copyright 2000 American Medical Association. All Rights Reserved. Applicable FARS/DFARS Apply.
[2] Copyright 1994 American Dental Association. All rights reserved.
[3] + Indicates RVUs are not used for Medicare payment.
[4] PE RVUs = Practice Expense Relative Value Units.

ADDENDUM B.—RELATIVE VALUE UNITS (RVU'S) AND RELATED INFORMATION—Continued

CPT[1]/ HCPCS[2]	MOD	Status	Description	Physician Work RVUs[3]	Fully Implemented Non-Facility PE RVUs	Year 2001 Transitional Non-Facility PE RVUs	Fully Implemented Facility PE RVUs	Year 2001 Transitional Facility PE RVUs	Mal-Practice RVUs	Fully Implemented Non-Facility Total	Year 2001 Transitional Non-Facility Total	Fully Implemented Facility Total	Year 2001 Transitional Facility Total	Global
53230		A	Removal of urethra lesion	9.58	NA	NA	5.98	6.64	0.60	NA	NA	16.16	16.82	090
53235		A	Removal of urethra lesion	10.14	NA	NA	6.17	5.99	0.60	NA	NA	16.91	16.73	090
53240		A	Surgery for urethra pouch	6.45	NA	NA	4.83	4.80	0.42	NA	NA	11.70	11.67	090
53250		A	Removal of urethra gland	5.89	NA	NA	4.15	4.21	0.35	NA	NA	10.39	10.45	090
53260		A	Treatment of urethra lesion	2.98	5.60	4.51	2.27	2.01	0.23	8.81	7.72	5.48	5.22	010
53265		A	Treatment of urethra lesion	3.12	5.98	5.00	2.24	2.19	0.20	9.30	8.32	5.56	5.51	010
53270		A	Removal of urethra gland	3.09	5.40	4.28	2.34	1.87	0.21	8.70	7.58	5.64	5.17	010
53275		A	Repair of urethra defect	4.53	NA	NA	3.17	3.02	0.28	NA	NA	7.98	7.83	010
53400		A	Revise urethra, stage 1	12.77	NA	NA	7.62	7.74	0.85	NA	NA	21.24	21.36	090
53405		A	Revise urethra, stage 2	14.48	NA	NA	8.03	8.84	0.91	NA	NA	23.42	24.23	090
53410		A	Reconstruction of urethra	16.44	NA	NA	8.61	8.78	0.99	NA	NA	26.04	26.21	090
53415		A	Reconstruction of urethra	19.41	NA	NA	9.51	10.35	1.16	NA	NA	30.08	30.92	090
53420		A	Reconstruct urethra, stage 1	14.08	NA	NA	8.24	9.13	0.90	NA	NA	23.22	24.11	090
53425		A	Reconstruct urethra, stage 2	15.98	NA	NA	8.71	9.04	0.97	NA	NA	25.66	25.99	090
53430		A	Reconstruction of urethra	16.34	NA	NA	8.72	8.48	1.01	NA	NA	26.07	25.83	090
53440		A	Correct bladder function	12.34	NA	NA	7.55	9.23	0.73	NA	NA	20.62	22.30	090
53442		A	Remove perineal prosthesis	8.27	NA	NA	5.68	5.85	0.55	NA	NA	14.50	14.67	090
53443		A	Reconstruction of urethra	19.89	NA	NA	9.33	9.72	1.25	NA	NA	30.47	30.86	090
53445		A	Correct urine flow control	14.06	NA	NA	8.14	10.30	0.84	NA	NA	23.04	25.20	090
53447		A	Remove artificial sphincter	13.17	NA	NA	7.45	8.07	0.79	NA	NA	21.41	22.03	090
53449		A	Correct artificial sphincter	9.70	NA	NA	6.27	6.99	0.57	NA	NA	16.54	17.26	090
53450		A	Revision of urethra	6.14	NA	NA	4.76	4.31	0.37	NA	NA	11.27	10.82	090
53460		A	Revision of urethra	7.12	NA	NA	5.13	4.51	0.43	NA	NA	12.68	12.06	090
53502		A	Repair of urethra injury	7.63	NA	NA	5.31	5.33	0.50	NA	NA	13.44	13.46	090
53505		A	Repair of urethra injury	7.63	NA	NA	5.26	5.35	0.46	NA	NA	13.35	13.44	090
53510		A	Repair of urethra injury	10.11	NA	NA	6.33	6.64	0.60	NA	NA	17.04	17.35	090
53515		A	Repair of urethra injury	13.31	NA	NA	7.24	7.88	0.83	NA	NA	21.38	22.02	090
53520		A	Repair of urethra defect	8.68	NA	NA	5.72	5.89	0.53	NA	NA	14.93	15.10	090
53600		A	Dilate urethra stricture	1.21	3.83	2.96	0.50	0.42	0.07	5.11	4.24	1.78	1.70	000
53601		A	Dilate urethra stricture	0.98	3.76	2.90	0.42	0.36	0.06	4.80	3.94	1.46	1.40	000
53605		A	Dilate urethra stricture	1.28	NA	NA	0.43	0.45	0.08	NA	NA	1.79	1.81	000
53620		A	Dilate urethra stricture	1.62	5.67	4.38	0.54	0.47	0.10	7.39	6.10	2.26	2.19	000
53621		A	Dilate urethra stricture	1.35	5.69	4.37	0.45	0.39	0.08	7.12	5.80	1.88	1.82	000
53660		A	Dilation of urethra	0.71	3.61	2.78	0.34	0.29	0.04	4.36	3.53	1.09	1.04	000
53661		A	Dilation of urethra	0.72	3.66	2.81	0.24	0.22	0.04	4.42	3.57	1.00	0.98	000
53665		A	Dilation of urethra	0.76	NA	NA	0.26	0.29	0.05	NA	NA	1.07	1.10	000
53670		A	Insert urinary catheter	0.50	3.37	2.59	0.21	0.19	0.03	3.90	3.12	0.74	0.72	000
53675		A	Insert urinary catheter	1.47	4.57	3.56	0.48	0.49	0.09	6.13	5.12	2.04	2.05	000
53850		A	Prostatic microwave thermotx	9.45	80.63	62.29	4.92	5.51	0.56	90.64	72.30	14.93	15.52	090
53852		A	Prostatic rf thermotx	9.88	69.08	53.71	5.17	5.78	0.58	79.54	64.17	15.63	16.24	090
53899		C	Urology surgery procedure	0.00	0.00	0.00	0.00	0.00	0.00	0.00	0.00	0.00	0.00	YYY
54000		A	Slitting of prepuce	1.54	5.25	4.11	1.37	1.20	0.10	6.89	5.75	3.01	2.84	010
54001		A	Slitting of prepuce	2.19	5.86	4.62	1.98	1.71	0.14	8.19	6.95	4.31	4.04	010
54015		A	Drain penis lesion	5.32	6.68	5.24	3.04	2.51	0.33	12.33	10.89	8.69	8.16	010
54050		A	Destruction, penis lesion(s)	1.24	2.62	2.07	0.50	0.43	0.07	3.93	3.38	1.81	1.74	010
54055		A	Destruction, penis lesion(s)	1.22	6.32	4.91	1.38	1.12	0.07	7.61	6.20	2.67	2.41	010
54056		A	Cryosurgery, penis lesion(s)	1.24	2.95	2.36	0.53	0.47	0.06	4.25	3.66	1.83	1.77	010
54057		A	Laser surg, penis lesion(s)	1.24	2.88	2.57	1.28	1.33	0.08	4.20	3.89	2.60	2.65	010
54060		A	Excision of penis lesion(s)	1.93	5.24	4.25	1.54	1.47	0.12	7.29	6.30	3.59	3.52	010
54065		A	Destruction, penis lesion(s)	2.42	5.25	4.61	2.05	1.87	0.13	7.80	7.16	4.60	4.42	010
54100		A	Biopsy of penis	1.90	3.54	2.83	0.74	0.73	0.10	5.54	4.83	2.74	2.73	000
54105		A	Biopsy of penis	3.50	6.09	4.84	2.06	1.82	0.21	9.80	8.55	5.77	5.53	010
54110		A	Treatment of penis lesion	10.13	NA	NA	7.61	7.34	0.60	NA	NA	18.34	18.07	090
54111		A	Treat penis lesion, graft	13.57	NA	NA	8.67	8.99	0.79	NA	NA	23.03	23.35	090
54112		A	Treat penis lesion, graft	15.86	NA	NA	9.50	10.07	0.94	NA	NA	26.30	26.87	090
54115		A	Treatment of penis lesion	6.15	10.02	8.65	6.35	5.90	0.39	16.56	15.19	12.89	12.44	090
54120		A	Partial removal of penis	9.97	NA	NA	7.55	7.42	0.60	NA	NA	18.12	17.99	090
54125		A	Removal of penis	13.53	NA	NA	8.71	9.67	0.81	NA	NA	23.05	24.01	090
54130		A	Remove penis & nodes	20.14	NA	NA	11.19	12.37	1.19	NA	NA	32.52	33.70	090
54135		A	Remove penis & nodes	26.36	NA	NA	13.34	14.82	1.58	NA	NA	41.28	42.76	090
54150		A	Circumcision	1.81	7.59	5.84	1.81	1.51	0.17	9.57	7.82	3.79	3.49	010
54152		A	Circumcision	2.31	NA	NA	1.69	1.76	0.16	NA	NA	4.16	4.23	010
54160		A	Circumcision	2.48	5.72	4.74	1.68	1.71	0.16	8.36	7.38	4.32	4.35	010
54161		A	Circumcision	3.27	NA	NA	1.97	2.07	0.20	NA	NA	5.44	5.54	010
54200		A	Treatment of penis lesion	1.06	2.56	2.01	0.37	0.32	0.06	3.68	3.13	1.49	1.44	010
54205		A	Treatment of penis lesion	7.93	NA	NA	7.03	6.66	0.47	NA	NA	15.43	15.06	090
54220		A	Treatment of penis lesion	2.42	1.91	1.86	0.99	1.17	0.15	4.48	4.43	3.56	3.74	000
54230		A	Prepare penis study	1.34	NA	NA	0.45	0.52	0.08	NA	NA	1.87	1.94	000
54231		A	Dynamic cavernosometry	2.04	2.13	1.99	0.79	0.98	0.14	4.31	4.17	2.97	3.16	000
54235		A	Penile injection	1.19	1.09	0.94	0.40	0.36	0.07	2.35	2.20	1.66	1.62	000
54240		A	Penis study	1.31	1.18	1.16	1.18	1.16	0.13	2.62	2.60	2.62	2.60	000
54240	26	A	Penis study	1.31	0.45	0.48	0.45	0.48	0.08	1.84	1.87	1.84	1.87	000
54240	TC	A	Penis study	0.00	0.73	0.68	NA	NA	0.05	0.78	0.73	NA	NA	000
54250		A	Penis study	2.22	3.51	2.85	3.51	2.85	0.16	5.89	5.23	5.89	5.23	000
54250	26	A	Penis study	2.22	0.75	0.70	0.75	0.70	0.14	3.11	3.06	3.11	3.06	000
54250	TC	A	Penis study	0.00	2.76	2.15	NA	NA	0.02	2.78	2.17	NA	NA	000
54300		A	Revision of penis	10.41	NA	NA	8.26	8.06	0.64	NA	NA	19.31	19.11	090
54304		A	Revision of penis	12.49	NA	NA	9.26	9.30	0.74	NA	NA	22.49	22.53	090
54308		A	Reconstruction of urethra	11.83	NA	NA	8.99	8.33	0.70	NA	NA	21.52	20.86	090
54312		A	Reconstruction of urethra	13.57	NA	NA	10.08	10.10	0.81	NA	NA	24.46	24.48	090
54316		A	Reconstruction of urethra	16.82	NA	NA	11.53	11.73	1.00	NA	NA	29.35	29.55	090
54318		A	Reconstruction of urethra	11.25	NA	NA	9.09	8.86	1.15	NA	NA	21.49	21.26	090
54322		A	Reconstruction of urethra	13.01	NA	NA	8.60	8.52	0.77	NA	NA	22.38	22.30	090

[1] CPT codes and descriptions only are copyright 2000 American Medical Association. All Rights Reserved. Applicable FARS/DFARS Apply.
[2] Copyright 1994 American Dental Association. All rights reserved.
[3] + Indicates RVUs are not used for Medicare payment.
[4] PE RVUs = Practice Expense Relative Value Units.

ADDENDUM B.—RELATIVE VALUE UNITS (RVU'S) AND RELATED INFORMATION—Continued

CPT[1]/ HCPCS[2]	MOD	Status	Description	Physician Work RVUs[3]	Fully Implemented Non-Facility PE RVUs	Year 2001 Transitional Non-Facility PE RVUs	Fully Implemented Facility PE RVUs	Year 2001 Transitional Facility PE RVUs	Mal-Practice RVUs	Fully Implemented Non-Facility Total	Year 2001 Transitional Non-Facility Total	Fully Implemented Facility Total	Year 2001 Transitional Facility Total	Global
54324		A	Reconstruction of urethra	16.31	NA	NA	11.30	11.46	1.03	NA	NA	28.64	28.80	090
54326		A	Reconstruction of urethra	15.72	NA	NA	9.93	10.30	0.93	NA	NA	26.58	26.95	090
54328		A	Revise penis/urethra	15.65	NA	NA	10.26	10.60	0.92	NA	NA	26.83	27.17	090
54332		A	Revise penis/urethra	17.08	NA	NA	11.62	12.11	1.01	NA	NA	29.71	30.20	090
54336		A	Revise penis/urethra	20.04	NA	NA	16.04	17.13	1.90	NA	NA	37.98	39.07	090
54340		A	Secondary urethral surgery	8.91	NA	NA	7.65	7.39	0.72	NA	NA	17.28	17.02	090
54344		A	Secondary urethral surgery	15.94	NA	NA	11.43	13.08	1.10	NA	NA	28.47	30.12	090
54348		A	Secondary urethral surgery	17.15	NA	NA	12.49	12.52	1.02	NA	NA	30.66	30.69	090
54352		A	Reconstruct urethra/penis	24.74	NA	NA	15.08	15.70	1.62	NA	NA	41.44	42.06	090
54360		A	Penis plastic surgery	11.93	NA	NA	8.13	8.00	0.72	NA	NA	20.78	20.65	090
54380		A	Repair penis	13.18	NA	NA	9.10	9.38	1.16	NA	NA	23.44	23.72	090
54385		A	Repair penis	15.39	NA	NA	11.08	11.15	0.71	NA	NA	27.18	27.25	090
54390		A	Repair penis and bladder	21.61	NA	NA	13.28	13.64	1.28	NA	NA	36.17	36.53	090
54400		A	Insert semi-rigid prosthesis	8.99	NA	NA	6.01	7.19	0.53	NA	NA	15.53	16.71	090
54401		A	Insert self-contd prosthesis	10.28	NA	NA	6.82	8.18	0.61	NA	NA	17.71	19.07	090
54402		A	Remove penis prosthesis	9.21	NA	NA	6.13	6.23	0.55	NA	NA	15.89	15.99	090
54405		A	Insert multi-comp prosthesis	13.43	NA	NA	7.92	9.95	0.80	NA	NA	22.15	24.18	090
54407		A	Remove multi-comp prosthesis	13.34	NA	NA	7.51	8.68	0.80	NA	NA	21.65	22.82	090
54409		A	Revise penis prosthesis	12.20	NA	NA	7.26	7.88	0.73	NA	NA	20.19	20.81	090
54420		A	Revision of penis	11.42	NA	NA	8.04	8.13	0.72	NA	NA	20.18	20.27	090
54430		A	Revision of penis	10.15	NA	NA	7.58	7.58	0.60	NA	NA	18.33	18.33	090
54435		A	Revision of penis	6.12	NA	NA	5.67	5.38	0.36	NA	NA	12.15	11.86	090
54440		C	Repair of penis	0.00	0.00	0.00	0.00	0.00	0.00	0.00	0.00	0.00	0.00	090
54450		A	Preputial stretching	1.12	0.99	0.93	0.46	0.53	0.07	2.18	2.12	1.65	1.72	000
54500		A	Biopsy of testis	1.31	5.92	4.56	0.45	0.46	0.08	7.31	5.95	1.84	1.85	000
54505		A	Biopsy of testis	3.46	NA	NA	2.53	2.40	0.21	NA	NA	6.20	6.07	010
54510		A	Removal of testis lesion	5.45	NA	NA	3.38	3.36	0.35	NA	NA	9.18	9.16	090
54512		A	Excise lesion testis	8.58	NA	NA	4.86	4.86	0.51	NA	NA	13.95	13.95	090
54520		A	Removal of testis	5.23	NA	NA	3.51	4.07	0.33	NA	NA	9.07	9.63	090
54522		A	Orchiectomy, partial	9.50	NA	NA	5.79	5.79	0.57	NA	NA	15.86	15.86	090
54530		A	Removal of testis	8.58	NA	NA	5.13	5.83	0.53	NA	NA	14.24	14.94	090
54535		A	Extensive testis surgery	12.16	NA	NA	7.00	7.57	0.83	NA	NA	19.99	20.56	090
54550		A	Exploration for testis	7.78	NA	NA	4.64	4.91	0.49	NA	NA	12.91	13.18	090
54560		A	Exploration for testis	11.13	NA	NA	6.75	7.03	0.79	NA	NA	18.67	18.95	090
54600		A	Reduce testis torsion	7.01	NA	NA	4.16	4.37	0.45	NA	NA	11.62	11.83	090
54620		A	Suspension of testis	4.90	NA	NA	3.01	3.16	0.31	NA	NA	8.22	8.37	010
54640		A	Suspension of testis	6.90	NA	NA	4.19	5.20	0.49	NA	NA	11.58	12.59	090
54650		A	Orchiopexy (Fowler-Stephens)	11.45	NA	NA	7.03	7.40	0.81	NA	NA	19.29	19.66	090
54660		A	Revision of testis	5.11	NA	NA	3.22	3.34	0.35	NA	NA	8.68	8.80	090
54670		A	Repair testis injury	6.41	NA	NA	4.09	4.24	0.41	NA	NA	10.91	11.06	090
54680		A	Relocation of testis(es)	12.65	NA	NA	7.37	7.75	0.94	NA	NA	20.96	21.34	090
54690		A	Laparoscopy, orchiectomy	10.96	NA	NA	6.44	6.79	0.99	NA	NA	18.39	18.74	090
54692		A	Laparoscopy, orchiopexy	12.88	NA	NA	5.68	5.68	0.87	NA	NA	19.43	19.43	090
54699		C	Laparoscope proc, testis	0.00	0.00	0.00	0.00	0.00	0.00	0.00	0.00	0.00	0.00	YYY
54700		A	Drainage of scrotum	3.43	7.92	6.19	3.26	2.69	0.23	11.58	9.85	6.92	6.35	010
54800		A	Biopsy of epididymis	2.33	6.01	5.04	0.83	1.16	0.14	8.48	7.51	3.30	3.63	000
54820		A	Exploration of epididymis	5.14	NA	NA	3.50	3.34	0.33	NA	NA	8.97	8.81	090
54830		A	Remove epididymis lesion	5.38	NA	NA	3.59	3.65	0.34	NA	NA	9.31	9.37	090
54840		A	Remove epididymis lesion	5.20	NA	NA	3.51	3.95	0.31	NA	NA	9.02	9.46	090
54860		A	Removal of epididymis	6.32	NA	NA	4.08	4.46	0.38	NA	NA	10.78	11.16	090
54861		A	Removal of epididymis	8.90	NA	NA	4.95	5.69	0.52	NA	NA	14.37	15.11	090
54900		A	Fusion of spermatic ducts	13.20	NA	NA	7.13	7.78	1.34	NA	NA	21.67	22.32	090
54901		A	Fusion of spermatic ducts	17.94	NA	NA	9.79	10.68	1.83	NA	NA	29.56	30.45	090
55000		A	Drainage of hydrocele	1.43	2.06	1.65	0.50	0.43	0.10	3.59	3.18	2.03	1.96	000
55040		A	Removal of hydrocele	5.36	NA	NA	3.36	3.85	0.35	NA	NA	9.07	9.56	090
55041		A	Removal of hydroceles	7.74	NA	NA	4.39	5.32	0.50	NA	NA	12.63	13.56	090
55060		A	Repair of hydrocele	5.52	NA	NA	3.41	3.68	0.37	NA	NA	9.30	9.57	090
55100		A	Drainage of scrotum abscess	2.13	9.03	6.94	3.48	2.78	0.15	11.31	9.22	5.76	5.06	010
55110		A	Explore scrotum	5.70	NA	NA	3.51	3.58	0.36	NA	NA	9.57	9.64	090
55120		A	Removal of scrotum lesion	5.09	NA	NA	3.28	2.95	0.33	NA	NA	8.70	8.37	090
55150		A	Removal of scrotum	7.22	NA	NA	4.46	4.82	0.47	NA	NA	12.15	12.51	090
55175		A	Revision of scrotum	5.24	NA	NA	3.60	3.92	0.33	NA	NA	9.17	9.49	090
55180		A	Revision of scrotum	10.72	NA	NA	6.28	6.56	0.72	NA	NA	17.72	18.00	090
55200		A	Incision of sperm duct	4.24	NA	NA	3.01	2.79	0.25	NA	NA	7.50	7.28	090
55250		A	Removal of sperm duct(s)	3.29	8.76	7.28	2.95	2.57	0.21	12.26	10.78	6.45	6.07	090
55300		A	Prepare, sperm duct x-ray	3.51	NA	NA	1.43	1.81	0.20	NA	NA	5.14	5.52	000
55400		A	Repair of sperm duct	8.49	NA	NA	5.10	5.61	0.50	NA	NA	14.09	14.60	090
55450		A	Ligation of sperm duct	4.12	7.31	6.19	2.39	2.50	0.24	11.67	10.55	6.75	6.86	010
55500		A	Removal of hydrocele	5.59	NA	NA	3.59	3.87	0.43	NA	NA	9.61	9.89	090
55520		A	Removal of sperm cord lesion	6.03	NA	NA	3.75	3.66	0.56	NA	NA	10.34	10.25	090
55530		A	Revise spermatic cord veins	5.66	NA	NA	3.69	4.18	0.36	NA	NA	9.71	10.20	090
55535		A	Revise spermatic cord veins	6.56	NA	NA	4.01	4.20	0.42	NA	NA	10.99	11.18	090
55540		A	Revise hernia & sperm veins	7.67	NA	NA	4.36	4.50	0.74	NA	NA	12.77	12.91	090
55550		A	Laparo ligate spermatic vein	6.57	NA	NA	3.36	3.72	0.47	NA	NA	10.40	10.76	090
55559		C	Laparo proc, spermatic cord	0.00	0.00	0.00	0.00	0.00	0.00	0.00	0.00	0.00	0.00	YYY
55600		A	Incise sperm duct pouch	6.38	NA	NA	4.12	4.26	0.38	NA	NA	10.88	11.02	090
55605		A	Incise sperm duct pouch	7.96	NA	NA	5.00	5.27	0.54	NA	NA	13.50	13.77	090
55650		A	Remove sperm duct pouch	11.80	NA	NA	6.10	6.54	0.72	NA	NA	18.62	19.06	090
55680		A	Remove sperm pouch lesion	5.19	NA	NA	3.79	4.05	0.31	NA	NA	9.29	9.55	090
55700		A	Biopsy of prostate	1.57	3.66	3.15	0.53	0.60	0.10	5.33	4.82	2.20	2.27	000
55705		A	Biopsy of prostate	4.57	NA	NA	3.62	3.63	0.26	NA	NA	8.45	8.46	010
55720		A	Drainage of prostate abscess	7.64	NA	NA	5.76	5.27	0.44	NA	NA	13.84	13.35	090
55725		A	Drainage of prostate abscess	8.68	NA	NA	6.38	6.31	0.51	NA	NA	15.57	15.50	090

[1] CPT codes and descriptions only are copyright 2000 American Medical Association. All Rights Reserved. Applicable FARS/DFARS Apply.
[2] Copyright 1994 American Dental Association. All rights reserved.
[3] + Indicates RVUs are not used for Medicare payment.
[4] PE RVUs = Practice Expense Relative Value Units.

ADDENDUM B.—RELATIVE VALUE UNITS (RVU'S) AND RELATED INFORMATION—Continued

CPT[1]/ HCPCS[2]	MOD	Status	Description	Physician Work RVUs[3]	Fully Implemented Non-Facility PE RVUs	Year 2001 Transitional Non-Facility PE RVUs	Fully Implemented Facility PE RVUs	Year 2001 Transitional Facility PE RVUs	Mal-Practice RVUs	Fully Implemented Non-Facility Total	Year 2001 Transitional Non-Facility Total	Fully Implemented Facility Total	Year 2001 Transitional Facility Total	Global
55801		A	Removal of prostate	17.80	NA	NA	9.24	10.39	1.08	NA	NA	28.12	29.27	090
55810		A	Extensive prostate surgery	22.58	NA	NA	11.24	13.28	1.35	NA	NA	35.17	37.21	090
55812		A	Extensive prostate surgery	27.51	NA	NA	13.75	15.11	1.69	NA	NA	42.95	44.31	090
55815		A	Extensive prostate surgery	30.46	NA	NA	14.27	17.54	1.84	NA	NA	46.57	49.84	090
55821		A	Removal of prostate	14.25	NA	NA	7.74	9.49	0.85	NA	NA	22.84	24.59	090
55831		A	Removal of prostate	15.62	NA	NA	8.22	10.12	0.94	NA	NA	24.78	26.68	090
55840		A	Extensive prostate surgery	22.69	NA	NA	11.63	13.23	1.37	NA	NA	35.69	37.29	090
55842		A	Extensive prostate surgery	24.38	NA	NA	12.25	14.39	1.48	NA	NA	38.11	40.25	090
55845		A	Extensive prostate surgery	28.55	NA	NA	13.57	16.99	1.71	NA	NA	43.83	47.25	090
55859		A	Percut/needle insert, pros	12.52	NA	NA	7.27	7.05	0.74	NA	NA	20.53	20.31	090
55860		A	Surgical exposure, prostate	14.45	NA	NA	8.17	8.06	0.82	NA	NA	23.44	23.33	090
55862		A	Extensive prostate surgery	18.39	NA	NA	9.40	10.22	1.14	NA	NA	28.93	29.75	090
55865		A	Extensive prostate surgery	22.87	NA	NA	10.96	14.87	1.37	NA	NA	35.20	39.11	090
55870		A	Electroejaculation	2.58	1.82	1.86	1.15	1.36	0.14	4.54	4.58	3.87	4.08	000
55873		A	Cryoablate prostate	17.80	NA	NA	10.16	10.16	1.01	NA	NA	28.97	28.97	090
55899		C	Genital surgery procedure	0.00	0.00	0.00	0.00	0.00	0.00	0.00	0.00	0.00	0.00	YYY
55970		N	Sex transformation, M to F	0.00	0.00	0.00	0.00	0.00	0.00	0.00	0.00	0.00	0.00	XXX
55980		N	Sex transformation, F to M	0.00	0.00	0.00	0.00	0.00	0.00	0.00	0.00	0.00	0.00	XXX
56405		A	I & D of vulva/perineum	1.44	2.28	1.92	1.24	1.03	0.14	3.86	3.50	2.82	2.61	010
56420		A	Drainage of gland abscess	1.39	2.26	1.91	1.20	1.01	0.13	3.78	3.43	2.72	2.53	010
56440		A	Surgery for vulva lesion	2.84	3.45	3.30	2.22	2.38	0.28	6.57	6.42	5.34	5.50	010
56441		A	Lysis of labial lesion(s)	1.97	2.48	2.31	1.95	1.91	0.17	4.62	4.45	4.09	4.05	010
56501		A	Destruction, vulva lesion(s)	1.53	2.23	1.82	1.29	1.04	0.15	3.91	3.50	2.97	2.72	010
56515		A	Destruction, vulva lesion(s)	1.88	2.64	2.62	1.90	1.99	0.18	4.70	4.68	3.96	4.05	010
56605		A	Biopsy of vulva/perineum	1.10	1.73	1.48	0.48	0.45	0.11	2.94	2.69	1.69	1.66	000
56606		A	Biopsy of vulva/perineum	0.55	1.50	1.22	0.22	0.21	0.06	2.11	1.83	0.83	0.82	ZZZ
56620		A	Partial removal of vulva	7.47	NA	NA	4.80	5.36	0.76	NA	NA	13.03	13.59	090
56625		A	Complete removal of vulva	8.40	NA	NA	5.69	6.78	0.84	NA	NA	14.93	16.02	090
56630		A	Extensive vulva surgery	12.36	NA	NA	7.56	9.32	1.23	NA	NA	21.15	22.91	090
56631		A	Extensive vulva surgery	16.20	NA	NA	10.15	12.45	1.63	NA	NA	27.98	30.28	090
56632		A	Extensive vulva surgery	20.29	NA	NA	11.82	14.65	2.03	NA	NA	34.14	36.97	090
56633		A	Extensive vulva surgery	16.47	NA	NA	9.20	11.23	1.66	NA	NA	27.33	29.36	090
56634		A	Extensive vulva surgery	17.88	NA	NA	10.82	13.45	1.78	NA	NA	30.48	33.11	090
56637		A	Extensive vulva surgery	21.97	NA	NA	12.51	15.20	2.18	NA	NA	36.66	39.35	090
56640		A	Extensive vulva surgery	22.17	NA	NA	12.32	14.65	2.26	NA	NA	36.75	39.08	090
56700		A	Partial removal of hymen	2.52	2.80	2.60	1.98	1.98	0.24	5.56	5.36	4.74	4.74	010
56720		A	Incision of hymen	0.68	1.62	1.35	0.68	0.64	0.07	2.37	2.10	1.43	1.39	000
56740		A	Remove vagina gland lesion	3.76	3.52	3.42	2.57	2.71	0.37	7.65	7.55	6.70	6.84	010
56800		A	Repair of vagina	3.89	NA	NA	2.63	2.77	0.37	NA	NA	6.89	7.03	010
56805		A	Repair clitoris	18.86	NA	NA	9.29	10.16	1.82	NA	NA	29.97	30.84	090
56810		A	Repair of perineum	4.13	NA	NA	2.73	2.76	0.41	NA	NA	7.27	7.30	010
57000		A	Exploration of vagina	2.97	NA	NA	2.27	2.25	0.28	NA	NA	5.52	5.50	010
57010		A	Drainage of pelvic abscess	6.03	NA	NA	3.79	3.56	0.57	NA	NA	10.39	10.16	090
57020		A	Drainage of pelvic fluid	1.50	1.56	1.35	0.63	0.65	0.15	3.21	3.00	2.28	2.30	000
57022		A	I &d vaginal hematoma, ob	2.56	NA	NA	1.60	1.60	0.14	NA	NA	4.30	4.30	010
57023		A	I &d vag hematoma, trauma	2.56	NA	NA	1.60	1.60	0.14	NA	NA	4.30	4.30	010
57061		A	Destruction vagina lesion(s)	1.25	2.18	1.86	1.19	1.01	0.13	3.56	3.24	2.57	2.39	010
57065		A	Destruction vagina lesion(s)	2.61	2.87	2.93	2.23	2.45	0.26	5.74	5.80	5.10	5.32	010
57100		A	Biopsy of vagina	0.97	1.42	1.23	0.42	0.40	0.10	2.49	2.30	1.49	1.47	000
57105		A	Biopsy of vagina	1.69	2.19	2.07	2.16	2.05	0.17	4.05	3.93	4.02	3.91	010
57106		A	Remove vagina wall, partial	6.36	2.48	2.48	2.48	2.48	0.58	9.42	9.42	9.42	9.42	090
57107		A	Remove vagina tissue, part	23.00	NA	NA	10.32	10.32	2.17	NA	NA	35.49	35.49	090
57109		A	Vaginectomy partial w/nodes	27.00	NA	NA	11.90	11.90	1.97	NA	NA	40.87	40.87	090
57110		A	Remove vagina wall, complete	14.29	NA	NA	7.20	7.54	1.43	NA	NA	22.92	23.26	090
57111		A	Remove vagina tissue, compl	27.00	NA	NA	12.17	12.17	2.71	NA	NA	41.88	41.88	090
57112		A	Vaginectomy w/nodes, compl	29.00	NA	NA	12.77	12.77	2.19	NA	NA	43.96	43.96	090
57120		A	Closure of vagina	7.41	NA	NA	4.54	5.30	0.75	NA	NA	12.70	13.46	090
57130		A	Remove vagina lesion	2.43	NA	NA	2.07	2.26	0.23	NA	NA	4.73	4.92	010
57135		A	Remove vagina lesion	2.67	2.85	2.66	2.17	2.15	0.26	5.78	5.59	5.10	5.08	010
57150		A	Treat vagina infection	0.55	0.98	0.79	0.21	0.19	0.06	1.59	1.40	0.82	0.80	000
57160		A	Insert pessary/other device	0.89	1.34	1.07	0.35	0.30	0.09	2.32	2.05	1.33	1.28	000
57170		A	Fitting of diaphragm/cap	0.91	1.38	1.12	0.33	0.29	0.09	2.38	2.12	1.33	1.29	000
57180		A	Treat vaginal bleeding	1.58	2.21	1.81	1.43	1.15	0.16	3.95	3.55	3.17	2.89	010
57200		A	Repair of vagina	3.94	NA	NA	2.93	2.93	0.38	NA	NA	7.25	7.25	090
57210		A	Repair vagina/perineum	5.17	NA	NA	3.41	3.45	0.50	NA	NA	9.08	9.12	090
57220		A	Revision of urethra	4.31	NA	NA	3.31	3.69	0.42	NA	NA	8.04	8.42	090
57230		A	Repair of urethral lesion	5.64	NA	NA	4.16	4.16	0.50	NA	NA	10.30	10.30	090
57240		A	Repair bladder & vagina	6.07	NA	NA	4.30	5.04	0.53	NA	NA	10.90	11.64	090
57250		A	Repair rectum & vagina	5.53	NA	NA	3.75	4.46	0.54	NA	NA	9.82	10.53	090
57260		A	Repair of vagina	8.27	NA	NA	4.85	5.99	0.83	NA	NA	13.95	15.09	090
57265		A	Extensive repair of vagina	11.34	NA	NA	6.75	7.62	1.14	NA	NA	19.23	20.10	090
57268		A	Repair of bowel bulge	6.76	NA	NA	4.24	5.09	0.66	NA	NA	11.66	12.51	090
57270		A	Repair of bowel pouch	12.11	NA	NA	6.18	6.49	1.17	NA	NA	19.46	19.77	090
57280		A	Suspension of vagina	15.04	NA	NA	7.31	7.80	1.44	NA	NA	23.79	24.28	090
57282		A	Repair of vaginal prolapse	8.86	NA	NA	5.09	6.18	0.86	NA	NA	14.81	15.90	090
57284		A	Repair paravaginal defect	12.70	NA	NA	6.94	7.54	1.17	NA	NA	20.81	21.41	090
57287		A	Revise/remove sling repair	10.71	NA	NA	7.02	7.02	0.64	NA	NA	18.37	18.37	090
57288		A	Repair bladder defect	13.02	NA	NA	6.80	8.01	0.86	NA	NA	20.68	21.89	090
57289		A	Repair bladder & vagina	11.58	NA	NA	6.62	7.19	0.95	NA	NA	19.15	19.72	090
57291		A	Construction of vagina	7.95	NA	NA	6.07	6.01	0.78	NA	NA	14.80	14.74	090
57292		A	Construct vagina with graft	13.09	NA	NA	7.25	7.22	1.29	NA	NA	21.63	21.60	090
57300		A	Repair rectum-vagina fistula	7.61	NA	NA	4.70	5.67	0.70	NA	NA	13.01	13.98	090
57305		A	Repair rectum-vagina fistula	13.77	NA	NA	7.10	7.37	1.33	NA	NA	22.20	22.47	090

[1] CPT codes and descriptions only are copyright 2000 American Medical Association. All Rights Reserved. Applicable FARS/DFARS Apply.
[2] Copyright 1994 American Dental Association. All rights reserved.
[3] + Indicates RVUs are not used for Medicare payment.
[4] PE RVUs = Practice Expense Relative Value Units.

ADDENDUM B.—RELATIVE VALUE UNITS (RVU'S) AND RELATED INFORMATION—Continued

CPT[1]/ HCPCS[2]	MOD	Status	Description	Physician Work RVUs[3]	Fully Implemented Non-Facility PE RVUs	Year 2001 Transitional Non-Facility PE RVUs	Fully Implemented Facility PE RVUs	Year 2001 Transitional Facility PE RVUs	Mal-Practice RVUs	Fully Implemented Non-Facility Total	Year 2001 Transitional Non-Facility Total	Fully Implemented Facility Total	Year 2001 Transitional Facility Total	Global
57307		A	Fistula repair & colostomy	15.93	NA	NA	7.77	7.49	1.59	NA	NA	25.29	25.01	090
57308		A	Fistula repair, transperine	9.94	NA	NA	5.73	6.26	0.91	NA	NA	16.58	17.11	090
57310		A	Repair urethrovaginal lesion	6.78	NA	NA	4.63	4.65	0.45	NA	NA	11.86	11.88	090
57311		A	Repair urethrovaginal lesion	7.98	NA	NA	5.19	5.41	0.51	NA	NA	13.68	13.90	090
57320		A	Repair bladder-vagina lesion	8.01	NA	NA	5.27	6.34	0.60	NA	NA	13.88	14.95	090
57330		A	Repair bladder-vagina lesion	12.35	NA	NA	6.60	7.20	0.86	NA	NA	19.81	20.41	090
57335		A	Repair vagina	18.73	NA	NA	9.15	8.74	1.66	NA	NA	29.54	29.13	090
57400		A	Dilation of vagina	2.27	NA	NA	1.29	1.06	0.22	NA	NA	3.78	3.55	000
57410		A	Pelvic examination	1.75	2.60	2.05	1.07	0.90	0.14	4.49	3.94	2.96	2.79	000
57415		A	Remove vaginal foreign body	2.17	3.37	2.63	2.00	1.60	0.19	5.73	4.99	4.36	3.96	010
57452		A	Examination of vagina	0.99	1.53	1.33	0.45	0.43	0.10	2.62	2.42	1.54	1.52	000
57454		A	Vagina examination & biopsy	1.27	1.71	1.61	0.59	0.61	0.13	3.11	3.01	1.99	2.01	000
57460		A	Cervix excision	2.83	2.05	2.09	1.13	1.12	0.28	5.16	5.20	4.24	4.23	000
57500		A	Biopsy of cervix	0.97	2.02	1.67	0.47	0.43	0.10	3.09	2.74	1.54	1.50	000
57505		A	Endocervical curettage	1.14	1.89	1.59	1.21	0.99	0.12	3.15	2.85	2.47	2.25	010
57510		A	Cauterization of cervix	1.90	3.07	2.44	1.52	1.21	0.18	5.15	4.52	3.60	3.29	010
57511		A	Cryocautery of cervix	1.90	2.35	1.99	0.74	0.67	0.18	4.43	4.07	2.82	2.75	010
57513		A	Laser surgery of cervix	1.90	2.50	2.44	1.49	1.69	0.19	4.59	4.53	3.58	3.78	010
57520		A	Conization of cervix	4.04	4.10	4.01	2.74	2.99	0.41	8.55	8.46	7.19	7.44	090
57522		A	Conization of cervix	3.36	3.65	3.67	2.47	2.79	0.34	7.35	7.37	6.17	6.49	090
57530		A	Removal of cervix	4.79	NA	NA	3.52	3.62	0.48	NA	NA	8.79	8.89	090
57531		A	Removal of cervix, radical	28.00	NA	NA	13.16	14.69	2.46	NA	NA	43.62	45.15	090
57540		A	Removal of residual cervix	12.22	NA	NA	6.14	6.43	1.21	NA	NA	19.57	19.86	090
57545		A	Remove cervix/repair pelvis	13.03	NA	NA	6.58	6.18	1.30	NA	NA	20.91	20.51	090
57550		A	Removal of residual cervix	5.53	NA	NA	3.75	4.46	0.55	NA	NA	9.83	10.54	090
57555		A	Remove cervix/repair vagina	8.95	NA	NA	5.48	6.78	0.89	NA	NA	15.32	16.62	090
57556		A	Remove cervix, repair bowel	8.37	NA	NA	4.85	6.14	0.80	NA	NA	14.02	15.31	090
57700		A	Revision of cervix	3.55	NA	NA	2.44	2.48	0.33	NA	NA	6.32	6.36	090
57720		A	Revision of cervix	4.13	NA	NA	3.22	3.17	0.41	NA	NA	7.76	7.71	090
57800		A	Dilation of cervical canal	0.77	1.15	0.99	0.35	0.33	0.08	2.00	1.84	1.20	1.18	000
57820		A	D & c of residual cervix	1.67	2.47	2.42	2.16	2.19	0.17	4.31	4.26	4.00	4.03	010
58100		A	Biopsy of uterus lining	0.71	1.99	1.67	0.28	0.30	0.07	2.77	2.45	1.06	1.08	000
58120		A	Dilation and curettage	3.27	3.72	3.52	2.36	2.50	0.33	7.32	7.12	5.96	6.10	010
58140		A	Removal of uterus lesion	14.60	NA	NA	7.06	7.56	1.46	NA	NA	23.12	23.62	090
58145		A	Removal of uterus lesion	8.04	NA	NA	4.78	5.82	0.80	NA	NA	13.62	14.66	090
58150		A	Total hysterectomy	15.24	NA	NA	7.45	8.19	1.53	NA	NA	24.22	24.96	090
58152		A	Total hysterectomy	15.09	NA	NA	7.40	8.80	1.52	NA	NA	24.01	25.41	090
58180		A	Partial hysterectomy	15.29	NA	NA	7.44	8.23	1.54	NA	NA	24.27	25.06	090
58200		A	Extensive hysterectomy	21.59	NA	NA	11.04	11.80	2.15	NA	NA	34.78	35.54	090
58210		A	Extensive hysterectomy	28.85	NA	NA	13.89	15.24	2.91	NA	NA	45.65	47.00	090
58240		A	Removal of pelvis contents	38.39	NA	NA	18.94	22.00	3.76	NA	NA	61.09	64.15	090
58260		A	Vaginal hysterectomy	12.20	NA	NA	5.92	6.99	1.23	NA	NA	19.35	20.42	090
58262		A	Vaginal hysterectomy	13.99	NA	NA	6.65	7.54	1.42	NA	NA	22.06	22.95	090
58263		A	Vaginal hysterectomy	15.28	NA	NA	7.16	8.17	1.55	NA	NA	23.99	25.00	090
58267		A	Hysterectomy & vagina repair	15.00	NA	NA	7.04	8.41	1.51	NA	NA	23.55	24.92	090
58270		A	Hysterectomy & vagina repair	13.48	NA	NA	6.45	7.64	1.37	NA	NA	21.30	22.49	090
58275		A	Hysterectomy/revise vagina	14.98	NA	NA	7.01	8.25	1.51	NA	NA	23.50	24.74	090
58280		A	Hysterectomy/revise vagina	15.41	NA	NA	7.13	8.20	1.54	NA	NA	24.08	25.15	090
58285		A	Extensive hysterectomy	18.57	NA	NA	9.80	10.50	1.88	NA	NA	30.25	30.95	090
58300		N	Insert intrauterine device	+1.01	1.39	1.25	0.40	0.51	0.10	2.50	2.36	1.51	1.62	XXX
58301		A	Remove intrauterine device	1.27	1.53	1.27	0.50	0.44	0.13	2.93	2.67	1.90	1.84	000
58321		A	Artificial insemination	0.92	0.88	0.85	0.37	0.47	0.10	1.90	1.87	1.39	1.49	000
58322		A	Artificial insemination	1.10	1.01	0.95	0.42	0.51	0.11	2.22	2.16	1.63	1.72	000
58323		A	Sperm washing	0.23	0.51	0.43	0.09	0.11	0.02	0.76	0.68	0.34	0.36	000
58340		A	Catheter for hysterography	0.88	11.40	8.71	0.33	0.40	0.08	12.36	9.67	1.29	1.36	000
58345		A	Reopen fallopian tube	4.66	NA	NA	1.80	2.30	0.36	NA	NA	6.82	7.32	010
58350		A	Reopen fallopian tube	1.01	1.98	1.67	1.06	0.98	0.10	3.09	2.78	2.17	2.09	010
58353		A	Endometr ablate, thermal	3.56	NA	NA	2.16	2.16	0.19	NA	NA	5.91	5.91	010
58400		A	Suspension of uterus	6.36	NA	NA	3.94	4.49	0.62	NA	NA	10.92	11.47	090
58410		A	Suspension of uterus	12.73	NA	NA	6.48	6.36	1.09	NA	NA	20.30	20.18	090
58520		A	Repair of ruptured uterus	11.92	NA	NA	5.87	5.55	1.17	NA	NA	18.96	18.64	090
58540		A	Revision of uterus	14.64	NA	NA	7.03	6.94	1.28	NA	NA	22.95	22.86	090
58550		A	Laparo-asst vag hysterectomy	14.19	NA	NA	6.71	7.58	1.44	NA	NA	22.34	23.21	010
58551		A	Laparoscopy, remove myoma	14.21	NA	NA	6.65	6.28	1.45	NA	NA	22.31	21.94	010
58555		A	Hysteroscopy, dx, sep proc	3.33	2.78	2.63	1.44	1.62	0.34	6.45	6.30	5.11	5.29	000
58558		A	Hysteroscopy, biopsy	4.75	3.36	3.06	2.02	2.06	0.49	8.60	8.30	7.26	7.30	000
58559		A	Hysteroscopy, lysis	6.17	2.45	2.86	2.45	2.86	0.62	9.24	9.65	9.24	9.65	000
58560		A	Hysteroscopy, resect septum	7.00	2.84	3.15	2.84	3.15	0.71	10.55	10.86	10.55	10.86	000
58561		A	Hysteroscopy, remove myoma	10.00	4.03	4.36	4.03	4.36	1.02	15.05	15.38	15.05	15.38	000
58562		A	Hysteroscopy, remove fb	5.21	NA	NA	2.20	2.19	0.52	NA	NA	7.93	7.92	000
58563		A	Hysteroscopy, ablation	6.17	2.47	3.04	2.47	3.04	0.62	9.26	9.83	9.26	9.83	000
58578		C	Laparo proc, uterus	0.00	0.00	0.00	0.00	0.00	0.00	0.00	0.00	0.00	0.00	YYY
58579		C	Hysteroscope procedure	0.00	0.00	0.00	0.00	0.00	0.00	0.00	0.00	0.00	0.00	YYY
58600		A	Division of fallopian tube	3.84	NA	NA	2.58	3.08	0.39	NA	NA	6.81	7.31	090
58605		A	Division of fallopian tube	3.34	NA	NA	2.40	2.80	0.33	NA	NA	6.07	6.47	090
58611		A	Ligate oviduct(s) add-on	0.63	NA	NA	0.25	0.32	0.07	NA	NA	0.95	1.02	ZZZ
58615		A	Occlude fallopian tube(s)	3.90	NA	NA	2.64	2.77	0.40	NA	NA	6.94	7.07	010
58660		A	Laparoscopy, lysis	11.29	NA	NA	5.46	5.62	1.14	NA	NA	17.89	18.05	090
58661		A	Laparoscopy, remove adnexa	11.05	NA	NA	5.19	5.84	1.12	NA	NA	17.36	18.01	010
58662		A	Laparoscopy, excise lesions	11.79	NA	NA	5.45	5.59	1.18	NA	NA	18.42	18.56	090
58670		A	Laparoscopy, tubal cautery	5.60	NA	NA	3.49	3.90	0.55	NA	NA	9.64	10.05	090
58671		A	Laparoscopy, tubal block	5.60	NA	NA	3.55	4.09	0.56	NA	NA	9.71	10.25	090
58672		A	Laparoscopy, fimbrioplasty	12.88	NA	NA	6.13	5.99	1.22	NA	NA	20.23	20.09	090

[1] CPT codes and descriptions only are copyright 2000 American Medical Association. All Rights Reserved. Applicable FARS/DFARS Apply.
[2] Copyright 1994 American Dental Association. All rights reserved.
[3] + Indicates RVUs are not used for Medicare payment.
[4] PE RVUs = Practice Expense Relative Value Units.

ADDENDUM B.—RELATIVE VALUE UNITS (RVU'S) AND RELATED INFORMATION—Continued

CPT[1]/ HCPCS[2]	MOD	Status	Description	Physician Work RVUs[3]	Fully Implemented Non-Facility PE RVUs	Year 2001 Transitional Non-Facility PE RVUs	Fully Implemented Facility PE RVUs	Year 2001 Transitional Facility PE RVUs	Mal-Practice RVUs	Fully Implemented Non-Facility Total	Year 2001 Transitional Non-Facility Total	Fully Implemented Facility Total	Year 2001 Transitional Facility Total	Global
58673		A	Laparoscopy, salpingostomy	13.74	NA	NA	6.82	6.55	1.40	NA	NA	21.96	21.69	090
58679		C	Laparo proc, oviduct-ovary	0.00	0.00	0.00	0.00	0.00	0.00	0.00	0.00	0.00	0.00	YYY
58700		A	Removal of fallopian tube	6.49	NA	NA	3.82	4.58	0.64	NA	NA	10.95	11.71	090
58720		A	Removal of ovary/tube(s)	11.36	NA	NA	5.77	6.36	1.14	NA	NA	18.27	18.86	090
58740		A	Revise fallopian tube(s)	5.83	NA	NA	3.71	4.52	0.59	NA	NA	10.13	10.94	090
58750		A	Repair oviduct	14.84	NA	NA	7.24	7.14	1.52	NA	NA	23.60	23.50	090
58752		A	Revise ovarian tube(s)	14.84	NA	NA	7.62	7.54	1.51	NA	NA	23.97	23.89	090
58760		A	Remove tubal obstruction	13.13	NA	NA	6.43	6.21	1.34	NA	NA	20.90	20.68	090
58770		A	Create new tubal opening	13.97	NA	NA	6.95	6.65	1.42	NA	NA	22.34	22.04	090
58800		A	Drainage of ovarian cyst(s)	4.14	4.32	3.97	4.16	3.85	0.36	8.82	8.47	8.66	8.35	090
58805		A	Drainage of ovarian cyst(s)	5.88	NA	NA	3.52	4.37	0.56	NA	NA	9.96	10.81	090
58820		A	Drain ovary abscess, open	4.22	NA	NA	3.26	3.20	0.29	NA	NA	7.77	7.71	090
58822		A	Drain ovary abscess, percut	10.13	NA	NA	5.15	4.83	0.92	NA	NA	16.20	15.88	090
58823		A	Drain pelvic abscess, percut	3.38	NA	NA	3.14	3.05	0.18	NA	NA	6.70	6.61	000
58825		A	Transposition, ovary(s)	6.13	NA	NA	3.88	4.00	0.62	NA	NA	10.63	10.75	090
58900		A	Biopsy of ovary(s)	5.99	NA	NA	3.59	4.10	0.56	NA	NA	10.14	10.65	090
58920		A	Partial removal of ovary(s)	6.78	NA	NA	3.85	4.73	0.68	NA	NA	11.31	12.19	090
58925		A	Removal of ovarian cyst(s)	11.36	NA	NA	5.66	6.03	1.14	NA	NA	18.16	18.53	090
58940		A	Removal of ovary(s)	7.29	NA	NA	4.05	4.80	0.73	NA	NA	12.07	12.82	090
58943		A	Removal of ovary(s)	18.43	NA	NA	9.53	10.43	1.86	NA	NA	29.82	30.72	090
58950		A	Resect ovarian malignancy	15.27	NA	NA	8.36	9.32	1.55	NA	NA	25.18	26.14	090
58951		A	Resect ovarian malignancy	21.81	NA	NA	11.01	13.23	2.20	NA	NA	35.02	37.24	090
58952		A	Resect ovarian malignancy	25.01	NA	NA	12.32	14.15	2.50	NA	NA	39.83	41.66	090
58960		A	Exploration of abdomen	14.65	NA	NA	8.15	9.64	1.47	NA	NA	24.27	25.76	090
58970		A	Retrieval of oocyte	3.53	8.65	7.17	1.80	2.03	0.36	12.54	11.06	5.69	5.92	000
58974		C	Transfer of embryo	0.00	0.00	0.00	0.00	0.00	0.00	0.00	0.00	0.00	0.00	000
58976		A	Transfer of embryo	3.83	2.28	2.45	1.53	1.89	0.39	6.50	6.67	5.75	6.11	000
58999		C	Genital surgery procedure	0.00	0.00	0.00	0.00	0.00	0.00	0.00	0.00	0.00	0.00	YYY
59000		A	Amniocentesis	1.30	1.86	1.66	0.61	0.72	0.23	3.39	3.19	2.14	2.25	000
59012		A	Fetal cord puncture,prenatal	3.45	NA	NA	1.65	1.95	0.62	NA	NA	5.72	6.02	000
59015		A	Chorion biopsy	2.20	1.32	1.32	0.89	0.99	0.40	3.92	3.92	3.49	3.59	000
59020		A	Fetal contract stress test	0.66	0.78	0.92	0.78	0.92	0.20	1.64	1.78	1.64	1.78	000
59020	26	A	Fetal contract stress test	0.66	0.26	0.39	0.26	0.39	0.12	1.04	1.17	1.04	1.17	000
59020	TC	A	Fetal contract stress test	0.00	0.52	0.53	NA	NA	0.08	0.60	0.61	NA	NA	000
59025		A	Fetal non-stress test	0.53	0.44	0.49	0.44	0.49	0.12	1.09	1.14	1.09	1.14	000
59025	26	A	Fetal non-stress test	0.53	0.21	0.26	0.21	0.26	0.10	0.84	0.89	0.84	0.89	000
59025	TC	A	Fetal non-stress test	0.00	0.23	0.23	NA	NA	0.02	0.25	0.25	NA	NA	000
59030		A	Fetal scalp blood sample	1.99	NA	NA	0.93	1.13	0.36	NA	NA	3.28	3.48	000
59050		A	Fetal monitor w/report	0.89	NA	NA	0.35	0.48	0.16	NA	NA	1.40	1.53	XXX
59051		A	Fetal monitor/interpret only	0.74	NA	NA	0.28	0.43	0.14	NA	NA	1.16	1.31	XXX
59100		A	Remove uterus lesion	12.35	NA	NA	6.03	5.65	2.21	NA	NA	20.59	20.21	090
59120		A	Treat ectopic pregnancy	11.49	NA	NA	6.01	6.64	2.06	NA	NA	19.56	20.19	090
59121		A	Treat ectopic pregnancy	11.67	NA	NA	6.04	5.99	2.09	NA	NA	19.80	19.75	090
59130		A	Treat ectopic pregnancy	14.22	NA	NA	7.10	6.94	2.54	NA	NA	23.86	23.70	090
59135		A	Treat ectopic pregnancy	13.88	NA	NA	6.97	7.90	2.49	NA	NA	23.34	24.27	090
59136		A	Treat ectopic pregnancy	13.18	NA	NA	6.71	6.72	2.36	NA	NA	22.25	22.26	090
59140		A	Treat ectopic pregnancy	5.46	NA	NA	3.17	3.64	0.98	NA	NA	9.61	10.08	090
59150		A	Treat ectopic pregnancy	6.89	NA	NA	4.37	4.51	1.23	NA	NA	12.49	12.63	090
59151		A	Treat ectopic pregnancy	7.86	NA	NA	4.29	5.55	1.41	NA	NA	13.56	14.82	090
59160		A	D & c after delivery	2.71	3.47	3.40	2.16	2.42	0.49	6.67	6.60	5.36	5.62	010
59200		A	Insert cervical dilator	0.79	1.31	1.13	0.31	0.31	0.15	2.25	2.07	1.25	1.25	000
59300		A	Episiotomy or vaginal repair	2.41	2.14	1.87	0.96	0.86	0.43	4.98	4.71	3.80	3.70	000
59320		A	Revision of cervix	2.48	NA	NA	1.40	1.53	0.45	NA	NA	4.33	4.46	000
59325		A	Revision of cervix	4.07	NA	NA	2.05	2.32	0.73	NA	NA	6.85	7.12	000
59350		A	Repair of uterus	4.95	NA	NA	1.95	2.42	0.88	NA	NA	7.78	8.25	000
59400		A	Obstetrical care	23.06	NA	NA	14.62	15.03	4.14	NA	NA	41.82	42.23	MMM
59409		A	Obstetrical care	13.50	NA	NA	5.29	6.54	2.42	NA	NA	21.21	22.46	MMM
59410		A	Obstetrical care	14.78	NA	NA	6.34	7.55	2.65	NA	NA	23.77	24.98	MMM
59412		A	Antepartum manipulation	1.71	1.28	1.29	0.69	0.85	0.31	3.30	3.31	2.71	2.87	MMM
59414		A	Deliver placenta	1.61	NA	NA	1.27	1.27	0.29	NA	NA	3.17	3.17	MMM
59425		A	Antepartum care only	4.81	5.10	4.61	5.02	4.16	0.86	10.77	10.28	10.69	9.83	MMM
59426		A	Antepartum care only	8.28	8.72	7.88	8.72	7.21	1.49	18.49	17.65	18.49	16.98	MMM
59430		A	Care after delivery	2.13	1.22	1.02	1.21	0.96	0.38	3.73	3.53	3.72	3.47	MMM
59510		A	Cesarean delivery	26.22	NA	NA	16.61	17.04	4.70	NA	NA	47.53	47.96	MMM
59514		A	Cesarean delivery only	15.97	NA	NA	6.22	7.65	2.86	NA	NA	25.05	26.48	MMM
59515		A	Cesarean delivery	17.37	NA	NA	7.99	9.20	3.12	NA	NA	28.48	29.69	MMM
59525		A	Remove uterus after cesarean	8.54	NA	NA	3.33	3.53	1.53	NA	NA	13.40	13.60	ZZZ
59610		A	Vbac delivery	24.62	NA	NA	15.08	15.38	4.41	NA	NA	44.11	44.41	MMM
59612		A	Vbac delivery only	15.06	NA	NA	6.03	7.10	2.70	NA	NA	23.79	24.86	MMM
59614		A	Vbac care after delivery	16.34	NA	NA	7.28	8.26	2.93	NA	NA	26.55	27.53	MMM
59618		A	Attempted vbac delivery	27.78	NA	NA	17.86	17.98	4.98	NA	NA	50.62	50.74	MMM
59620		A	Attempted vbac delivery only	17.53	NA	NA	6.68	7.99	3.15	NA	NA	27.36	28.67	MMM
59622		A	Attempted vbac after care	18.93	NA	NA	8.59	9.65	3.39	NA	NA	30.91	31.97	MMM
59812		A	Treatment of miscarriage	3.25	3.27	3.43	2.12	2.56	0.58	7.10	7.26	5.95	6.39	090
59820		A	Care of miscarriage	4.01	3.58	3.70	2.63	2.99	0.72	8.31	8.43	7.36	7.72	090
59821		A	Treatment of miscarriage	4.47	3.72	3.53	2.82	2.85	0.80	8.99	8.80	8.09	8.12	090
59830		A	Treat uterus infection	6.11	NA	NA	3.80	4.08	1.10	NA	NA	11.01	11.29	090
59840		R	Abortion	3.01	3.88	3.78	2.16	2.49	0.54	7.43	7.33	5.71	6.04	010
59841		R	Abortion	5.24	5.56	5.19	3.49	3.64	0.94	11.74	11.37	9.67	9.82	010
59850		R	Abortion	5.91	NA	NA	2.76	3.16	1.06	NA	NA	9.73	10.13	090
59851		R	Abortion	5.93	NA	NA	3.07	3.46	1.06	NA	NA	10.06	10.45	090
59852		R	Abortion	8.24	NA	NA	4.35	4.76	1.48	NA	NA	14.07	14.48	090
59855		R	Abortion	6.12	NA	NA	3.22	3.54	1.10	NA	NA	10.44	10.76	090

[1] CPT codes and descriptions only are copyright 2000 American Medical Association. All Rights Reserved. Applicable FARS/DFARS Apply.
[2] Copyright 1994 American Dental Association. All rights reserved.
[3] + Indicates RVUs are not used for Medicare payment.
[4] PE RVUs = Practice Expense Relative Value Units.

ADDENDUM B.—RELATIVE VALUE UNITS (RVU'S) AND RELATED INFORMATION—Continued

CPT[1]/ HCPCS[2]	MOD	Status	Description	Physician Work RVUs[3]	Fully Implemented Non-Facility PE RVUs	Year 2001 Transitional Non-Facility PE RVUs	Fully Implemented Facility PE RVUs	Year 2001 Transitional Facility PE RVUs	Mal-Practice RVUs	Fully Implemented Non-Facility Total	Year 2001 Transitional Non-Facility Total	Fully Implemented Facility Total	Year 2001 Transitional Facility Total	Global
59856		R	Abortion	7.48	NA	NA	3.73	4.19	1.34	NA	NA	12.55	13.01	090
59857		R	Abortion	9.29	NA	NA	4.45	5.03	1.66	NA	NA	15.40	15.98	090
59866		R	Abortion (mpr)	4.00	NA	NA	1.60	1.98	0.72	NA	NA	6.32	6.70	000
59870		A	Evacuate mole of uterus	4.28	NA	NA	3.06	3.09	0.77	NA	NA	8.11	8.14	090
59871		A	Remove cerclage suture	2.13	1.90	1.91	0.87	1.14	0.38	4.41	4.42	3.38	3.65	000
59898		C	Laparo proc, ob care/deliver	0.00	0.00	0.00	0.00	0.00	0.00	0.00	0.00	0.00	0.00	YYY
59899		C	Maternity care procedure	0.00	0.00	0.00	0.00	0.00	0.00	0.00	0.00	0.00	0.00	YYY
60000		A	Drain thyroid/tongue cyst	1.76	2.36	1.93	2.31	1.82	0.14	4.26	3.83	4.21	3.72	010
60001		A	Aspirate/inject thyriod cyst	0.97	1.54	1.44	0.37	0.56	0.06	2.57	2.47	1.40	1.59	000
60100		A	Biopsy of thyroid	0.97	2.32	2.03	0.35	0.41	0.05	3.34	3.05	1.37	1.43	000
60200		A	Remove thyroid lesion	9.55	NA	NA	6.79	6.73	0.84	NA	NA	17.18	17.12	090
60210		A	Partial thyroid excision	10.88	NA	NA	6.69	7.37	1.01	NA	NA	18.58	19.26	090
60212		A	Parital thyroid excision	16.03	NA	NA	8.83	9.08	1.51	NA	NA	26.37	26.62	090
60220		A	Partial removal of thyroid	10.53	NA	NA	6.60	7.27	0.97	NA	NA	18.10	18.77	090
60225		A	Partial removal of thyroid	14.19	NA	NA	8.15	8.96	1.31	NA	NA	23.65	24.46	090
60240		A	Removal of thyroid	16.06	NA	NA	9.33	9.87	1.50	NA	NA	26.89	27.43	090
60252		A	Removal of thyroid	18.20	NA	NA	10.78	11.79	1.63	NA	NA	30.61	31.62	090
60254		A	Extensive thyroid surgery	23.88	NA	NA	14.52	16.10	1.96	NA	NA	40.36	41.94	090
60260		A	Repeat thyroid surgery	15.46	NA	NA	9.68	8.11	1.39	NA	NA	26.53	24.96	090
60270		A	Removal of thyroid	17.94	NA	NA	12.04	12.82	1.78	NA	NA	31.76	32.54	090
60271		A	Removal of thyroid	14.89	NA	NA	9.27	10.25	1.35	NA	NA	25.51	26.49	090
60280		A	Remove thyroid duct lesion	5.87	NA	NA	5.11	5.65	0.45	NA	NA	11.43	11.97	090
60281		A	Remove thyroid duct lesion	8.53	NA	NA	6.44	6.20	0.67	NA	NA	15.64	15.40	090
60500		A	Explore parathyroid glands	16.23	NA	NA	8.11	9.17	1.61	NA	NA	25.95	27.01	090
60502		A	Re-explore parathyroids	20.35	NA	NA	9.94	10.55	2.00	NA	NA	32.29	32.90	090
60505		A	Explore parathyroid glands	21.49	NA	NA	11.77	12.39	2.14	NA	NA	35.40	36.02	090
60512		A	Autotransplant parathyroid	4.45	NA	NA	1.78	1.97	0.44	NA	NA	6.67	6.86	ZZZ
60520		A	Removal of thymus gland	16.81	NA	NA	11.14	12.03	1.84	NA	NA	29.79	30.68	090
60521		A	Removal of thymus gland	18.87	NA	NA	14.46	14.52	2.34	NA	NA	35.67	35.73	090
60522		A	Removal of thymus gland	23.09	NA	NA	15.89	15.59	2.83	NA	NA	41.81	41.51	090
60540		A	Explore adrenal gland	17.03	NA	NA	8.03	9.29	1.42	NA	NA	26.48	27.74	090
60545		A	Explore adrenal gland	19.88	NA	NA	9.84	11.25	1.75	NA	NA	31.47	32.88	090
60600		A	Remove carotid body lesion	17.93	NA	NA	14.03	13.63	1.87	NA	NA	33.83	33.43	090
60605		A	Remove carotid body lesion	20.24	NA	NA	19.89	17.82	2.28	NA	NA	42.41	40.34	090
60650		A	Laparoscopy adrenalectomy	20.00	NA	NA	8.60	8.60	1.98	NA	NA	30.58	30.58	090
60659		C	Laparo proc, endocrine	0.00	0.00	0.00	0.00	0.00	0.00	0.00	0.00	0.00	0.00	YYY
60699		C	Endocrine surgery procedure	0.00	0.00	0.00	0.00	0.00	0.00	0.00	0.00	0.00	0.00	YYY
61000		A	Remove cranial cavity fluid	1.58	1.72	1.58	1.59	1.48	0.13	3.43	3.29	3.30	3.19	000
61001		A	Remove cranial cavity fluid	1.49	1.88	1.65	1.38	1.16	0.15	3.52	3.29	3.02	2.80	000
61020		A	Remove brain cavity fluid	1.51	2.25	2.03	1.49	1.46	0.26	4.02	3.80	3.26	3.23	000
61026		A	Injection into brain canal	1.69	2.11	2.09	1.68	1.77	0.21	4.01	3.99	3.58	3.67	000
61050		A	Remove brain canal fluid	1.51	NA	NA	1.54	1.49	0.13	NA	NA	3.18	3.13	000
61055		A	Injection into brain canal	2.10	NA	NA	1.71	1.79	0.13	NA	NA	3.94	4.02	000
61070		A	Brain canal shunt procedure	0.89	6.61	5.09	1.16	0.94	0.09	7.59	6.07	2.14	1.92	000
61105		A	Twist drill hole	5.14	NA	NA	3.62	4.25	1.05	NA	NA	9.81	10.44	090
61107		A	Drill skull for implantation	5.00	NA	NA	3.13	3.84	1.02	NA	NA	9.15	9.86	000
61108		A	Drill skull for drainage	10.19	NA	NA	6.93	8.24	2.04	NA	NA	19.16	20.47	090
61120		A	Burr hole for puncture	8.76	NA	NA	5.79	5.96	1.81	NA	NA	16.36	16.53	090
61140		A	Pierce skull for biopsy	15.90	NA	NA	9.85	11.22	3.15	NA	NA	28.90	30.27	090
61150		A	Pierce skull for drainage	17.57	NA	NA	10.56	11.90	3.52	NA	NA	31.65	32.99	090
61151		A	Pierce skull for drainage	12.42	NA	NA	8.20	6.73	2.45	NA	NA	23.07	21.60	090
61154		A	Pierce skull & remove clot	14.99	NA	NA	9.42	11.54	3.05	NA	NA	27.46	29.58	090
61156		A	Pierce skull for drainage	16.32	NA	NA	10.26	12.09	3.42	NA	NA	30.00	31.83	090
61210		A	Pierce skull, implant device	5.84	NA	NA	3.50	4.26	1.16	NA	NA	10.50	11.26	000
61215		A	Insert brain-fluid device	4.89	NA	NA	4.19	4.60	0.99	NA	NA	10.07	10.48	090
61250		A	Pierce skull & explore	10.42	NA	NA	6.68	7.19	2.02	NA	NA	19.12	19.63	090
61253		A	Pierce skull & explore	12.36	NA	NA	7.31	8.09	2.26	NA	NA	21.93	22.71	090
61304		A	Open skull for exploration	21.96	NA	NA	12.56	15.98	4.33	NA	NA	38.85	42.27	090
61305		A	Open skull for exploration	26.61	NA	NA	14.90	19.07	5.25	NA	NA	46.76	50.93	090
61312		A	Open skull for drainage	24.57	NA	NA	14.32	17.29	4.99	NA	NA	43.88	46.85	090
61313		A	Open skull for drainage	24.93	NA	NA	14.54	17.43	5.07	NA	NA	44.54	47.43	090
61314		A	Open skull for drainage	24.23	NA	NA	12.38	16.24	4.00	NA	NA	40.61	44.47	090
61315		A	Open skull for drainage	27.68	NA	NA	15.98	18.61	5.62	NA	NA	49.28	51.91	090
61320		A	Open skull for drainage	25.62	NA	NA	14.92	16.26	5.20	NA	NA	45.74	47.08	090
61321		A	Open skull for drainage	28.50	NA	NA	15.99	17.37	5.35	NA	NA	49.84	51.22	090
61330		A	Decompress eye socket	23.32	NA	NA	17.09	16.34	2.58	NA	NA	42.99	42.24	090
61332		A	Explore/biopsy eye socket	27.28	NA	NA	19.47	20.23	4.15	NA	NA	50.90	51.66	090
61333		A	Explore orbit/remove lesion	27.95	NA	NA	16.46	17.90	2.24	NA	NA	46.65	48.09	090
61334		A	Explore orbit/remove object	18.27	NA	NA	11.80	12.83	3.02	NA	NA	33.09	34.12	090
61340		A	Relieve cranial pressure	18.66	NA	NA	11.49	12.63	3.66	NA	NA	33.81	34.95	090
61343		A	Incise skull (press relief)	29.77	NA	NA	17.69	21.42	6.04	NA	NA	53.50	57.23	090
61345		A	Relieve cranial pressure	27.20	NA	NA	16.30	17.43	5.23	NA	NA	48.73	49.86	090
61440		A	Incise skull for surgery	26.63	NA	NA	16.08	17.69	5.57	NA	NA	48.28	49.89	090
61450		A	Incise skull for surgery	25.95	NA	NA	14.62	16.51	5.11	NA	NA	45.68	47.57	090
61458		A	Incise skull for brain wound	27.29	NA	NA	15.66	19.15	5.28	NA	NA	48.23	51.72	090
61460		A	Incise skull for surgery	28.39	NA	NA	16.67	19.30	5.13	NA	NA	50.19	52.82	090
61470		A	Incise skull for surgery	26.06	NA	NA	14.09	14.33	4.65	NA	NA	44.80	45.04	090
61480		A	Incise skull for surgery	26.49	NA	NA	13.98	14.57	5.54	NA	NA	46.01	46.60	090
61490		A	Incise skull for surgery	25.66	NA	NA	14.93	14.38	5.37	NA	NA	45.96	45.41	090
61500		A	Removal of skull lesion	17.92	NA	NA	10.93	13.55	3.26	NA	NA	32.11	34.73	090
61501		A	Remove infected skull bone	14.84	NA	NA	9.13	11.28	2.63	NA	NA	26.60	28.75	090
61510		A	Removal of brain lesion	28.45	NA	NA	16.32	19.58	5.77	NA	NA	50.54	53.80	090
61512		A	Remove brain lining lesion	35.09	NA	NA	19.84	22.75	7.14	NA	NA	62.07	64.98	090

[1] CPT codes and descriptions only are copyright 2000 American Medical Association. All Rights Reserved. Applicable FARS/DFARS Apply.
[2] Copyright 1994 American Dental Association. All rights reserved.
[3] + Indicates RVUs are not used for Medicare payment.
[4] PE RVUs = Practice Expense Relative Value Units.

ADDENDUM B.—RELATIVE VALUE UNITS (RVU'S) AND RELATED INFORMATION—Continued

CPT[1]/ HCPCS[2]	MOD	Status	Description	Physician Work RVUs[3]	Fully Implemented Non-Facility PE RVUs	Year 2001 Transitional Non-Facility PE RVUs	Fully Implemented Facility PE RVUs	Year 2001 Transitional Facility PE RVUs	Mal-Practice RVUs	Fully Implemented Non-Facility Total	Year 2001 Transitional Non-Facility Total	Fully Implemented Facility Total	Year 2001 Transitional Facility Total	Global
61514		A	Removal of brain abscess	25.26	NA	NA	14.53	17.82	5.12	NA	NA	44.91	48.20	090
61516		A	Removal of brain lesion	24.61	NA	NA	14.70	18.21	4.94	NA	NA	44.25	47.76	090
61518		A	Removal of brain lesion	37.32	NA	NA	21.97	24.62	7.53	NA	NA	66.82	69.47	090
61519		A	Remove brain lining lesion	41.39	NA	NA	23.83	26.34	8.15	NA	NA	73.37	75.88	090
61520		A	Removal of brain lesion	54.84	NA	NA	31.48	32.80	10.10	NA	NA	96.42	97.74	090
61521		A	Removal of brain lesion	44.48	NA	NA	25.81	28.30	8.85	NA	NA	79.14	81.63	090
61522		A	Removal of brain abscess	29.45	NA	NA	16.95	18.13	5.30	NA	NA	51.70	52.88	090
61524		A	Removal of brain lesion	27.86	NA	NA	16.43	19.77	5.01	NA	NA	49.30	52.64	090
61526		A	Removal of brain lesion	52.17	NA	NA	30.05	31.77	6.72	NA	NA	88.94	90.66	090
61530		A	Removal of brain lesion	43.86	NA	NA	26.95	29.44	6.17	NA	NA	76.98	79.47	090
61531		A	Implant brain electrodes	14.63	NA	NA	9.16	10.94	2.84	NA	NA	26.63	28.41	090
61533		A	Implant brain electrodes	19.71	NA	NA	11.98	13.60	3.80	NA	NA	35.49	37.11	090
61534		A	Removal of brain lesion	20.97	NA	NA	12.97	11.46	4.15	NA	NA	38.09	36.58	090
61535		A	Remove brain electrodes	11.63	NA	NA	7.75	7.89	2.29	NA	NA	21.67	21.81	090
61536		A	Removal of brain lesion	35.52	NA	NA	20.35	21.22	6.68	NA	NA	62.55	63.42	090
61538		A	Removal of brain tissue	26.81	NA	NA	16.00	19.89	5.38	NA	NA	48.19	52.08	090
61539		A	Removal of brain tissue	32.08	NA	NA	18.89	20.40	6.62	NA	NA	57.59	59.10	090
61541		A	Incision of brain tissue	28.85	NA	NA	16.34	17.63	5.50	NA	NA	50.69	51.98	090
61542		A	Removal of brain tissue	31.02	NA	NA	18.75	19.47	6.49	NA	NA	56.26	56.98	090
61543		A	Removal of brain tissue	29.22	NA	NA	17.80	18.03	6.11	NA	NA	53.13	53.36	090
61544		A	Remove & treat brain lesion	25.50	NA	NA	12.17	16.74	4.91	NA	NA	42.58	47.15	090
61545		A	Excision of brain tumor	43.80	NA	NA	24.52	25.35	8.88	NA	NA	77.20	78.03	090
61546		A	Removal of pituitary gland	31.30	NA	NA	18.13	20.93	6.06	NA	NA	55.49	58.29	090
61548		A	Removal of pituitary gland	21.53	NA	NA	13.47	16.53	3.63	NA	NA	38.63	41.69	090
61550		A	Release of skull seams	14.65	NA	NA	7.52	8.85	1.14	NA	NA	23.31	24.64	090
61552		A	Release of skull seams	19.56	NA	NA	10.70	11.78	0.88	NA	NA	31.14	32.22	090
61556		A	Incise skull/sutures	22.26	NA	NA	12.44	13.54	3.57	NA	NA	38.27	39.37	090
61557		A	Incise skull/sutures	22.38	NA	NA	12.84	13.87	4.68	NA	NA	39.90	40.93	090
61558		A	Excision of skull/sutures	25.58	NA	NA	12.59	14.26	2.61	NA	NA	40.78	42.45	090
61559		A	Excision of skull/sutures	32.79	NA	NA	18.98	20.48	6.86	NA	NA	58.63	60.13	090
61563		A	Excision of skull tumor	26.83	NA	NA	15.92	17.04	4.46	NA	NA	47.21	48.33	090
61564		A	Excision of skull tumor	33.83	NA	NA	19.23	20.86	7.08	NA	NA	60.14	61.77	090
61570		A	Remove foreign body, brain	24.60	NA	NA	13.38	14.51	4.60	NA	NA	42.58	43.71	090
61571		A	Incise skull for brain wound	26.39	NA	NA	14.97	16.20	5.23	NA	NA	46.59	47.82	090
61575		A	Skull base/brainstem surgery	34.36	NA	NA	20.91	24.63	5.02	NA	NA	60.29	64.01	090
61576		A	Skull base/brainstem surgery	52.43	NA	NA	29.71	29.94	4.68	NA	NA	86.82	87.05	090
61580		A	Craniofacial approach, skull	30.35	NA	NA	19.34	20.21	2.75	NA	NA	52.44	53.31	090
61581		A	Craniofacial approach, skull	34.60	NA	NA	21.58	22.65	3.37	NA	NA	59.55	60.62	090
61582		A	Craniofacial approach, skull	31.66	NA	NA	19.27	20.33	6.30	NA	NA	57.23	58.29	090
61583		A	Craniofacial approach, skull	36.21	NA	NA	22.22	23.37	6.94	NA	NA	65.37	66.52	090
61584		A	Orbitocranial approach/skull	34.65	NA	NA	20.79	22.08	6.53	NA	NA	61.97	63.26	090
61585		A	Orbitocranial approach/skull	38.61	NA	NA	22.70	24.28	6.19	NA	NA	67.50	69.08	090
61586		A	Resect nasopharynx, skull	25.10	NA	NA	15.96	17.77	3.52	NA	NA	44.58	46.39	090
61590		A	Infratemporal approach/skull	41.78	NA	NA	25.53	27.04	4.28	NA	NA	71.59	73.10	090
61591		A	Infratemporal approach/skull	43.68	NA	NA	26.58	28.22	5.26	NA	NA	75.52	77.16	090
61592		A	Orbitocranial approach/skull	39.64	NA	NA	23.29	24.98	7.55	NA	NA	70.48	72.17	090
61595		A	Transtemporal approach/skull	29.57	NA	NA	19.23	19.97	3.05	NA	NA	51.85	52.59	090
61596		A	Transcochlear approach/skull	35.63	NA	NA	22.03	23.26	4.25	NA	NA	61.91	63.14	090
61597		A	Transcondylar approach/skull	37.96	NA	NA	21.88	23.54	6.65	NA	NA	66.49	68.15	090
61598		A	Transpetrosal approach/skull	33.41	NA	NA	20.63	21.75	4.60	NA	NA	58.64	59.76	090
61600		A	Resect/excise cranial lesion	25.85	NA	NA	16.56	17.23	3.12	NA	NA	45.53	46.20	090
61601		A	Resect/excise cranial lesion	27.89	NA	NA	17.07	17.97	5.29	NA	NA	50.25	51.15	090
61605		A	Resect/excise cranial lesion	29.33	NA	NA	18.45	19.29	2.51	NA	NA	50.29	51.13	090
61606		A	Resect/excise cranial lesion	38.83	NA	NA	23.10	24.62	6.81	NA	NA	68.74	70.26	090
61607		A	Resect/excise cranial lesion	36.27	NA	NA	21.76	23.14	5.69	NA	NA	63.72	65.10	090
61608		A	Resect/excise cranial lesion	42.10	NA	NA	24.41	26.24	8.31	NA	NA	74.82	76.65	090
61609		A	Transect artery, sinus	9.89	NA	NA	4.60	5.40	2.07	NA	NA	16.56	17.36	ZZZ
61610		A	Transect artery, sinus	29.67	NA	NA	12.44	15.18	3.52	NA	NA	45.63	48.37	ZZZ
61611		A	Transect artery, sinus	7.42	NA	NA	2.97	3.69	1.55	NA	NA	11.94	12.66	ZZZ
61612		A	Transect artery, sinus	27.88	NA	NA	14.40	16.30	3.55	NA	NA	45.83	47.73	ZZZ
61613		A	Remove aneurysm, sinus	40.86	NA	NA	23.85	25.67	8.32	NA	NA	73.03	74.85	090
61615		A	Resect/excise lesion, skull	32.07	NA	NA	20.34	21.24	4.64	NA	NA	57.05	57.95	090
61616		A	Resect/excise lesion, skull	43.33	NA	NA	26.84	28.28	7.02	NA	NA	77.19	78.63	090
61618		A	Repair dura	16.99	NA	NA	11.19	11.47	2.92	NA	NA	31.10	31.38	090
61619		A	Repair dura	20.71	NA	NA	13.21	13.76	3.42	NA	NA	37.34	37.89	090
61624		A	Occlusion/embolization cath	20.15	NA	NA	7.37	9.67	1.15	NA	NA	28.67	30.97	000
61626		A	Occlusion/embolization cath	16.62	NA	NA	5.97	7.90	0.84	NA	NA	23.43	25.36	000
61680		A	Intracranial vessel surgery	30.71	NA	NA	18.38	22.21	6.04	NA	NA	55.13	58.96	090
61682		A	Intracranial vessel surgery	61.57	NA	NA	33.79	34.92	12.69	NA	NA	108.05	109.18	090
61684		A	Intracranial vessel surgery	39.81	NA	NA	21.84	24.46	7.87	NA	NA	69.52	72.14	090
61686		A	Intracranial vessel surgery	64.49	NA	NA	35.92	36.70	13.20	NA	NA	113.61	114.39	090
61690		A	Intracranial vessel surgery	29.31	NA	NA	17.53	20.60	5.51	NA	NA	52.35	55.42	090
61692		A	Intracranial vessel surgery	51.87	NA	NA	29.08	29.62	10.17	NA	NA	91.12	91.66	090
61697		A	Brain aneurysm repr, complx	50.52	NA	NA	27.76	27.76	9.57	NA	NA	87.85	87.85	090
61698		A	Brain aneurysm repr, complx	48.41	NA	NA	26.87	26.87	9.28	NA	NA	84.56	84.56	090
61700		A	Brain aneurysm repr , simple	50.52	NA	NA	27.76	29.42	10.18	NA	NA	88.46	90.12	090
61702		A	Inner skull vessel surgery	48.41	NA	NA	26.87	30.01	9.75	NA	NA	85.03	88.17	090
61703		A	Clamp neck artery	17.47	NA	NA	10.99	11.56	3.62	NA	NA	32.08	32.65	090
61705		A	Revise circulation to head	36.20	NA	NA	20.20	23.40	6.67	NA	NA	63.07	66.27	090
61708		A	Revise circulation to head	35.30	NA	NA	16.08	18.90	2.18	NA	NA	53.56	56.38	090
61710		A	Revise circulation to head	29.67	NA	NA	14.40	15.31	2.42	NA	NA	46.49	47.40	090
61711		A	Fusion of skull arteries	36.33	NA	NA	20.00	23.97	7.39	NA	NA	63.72	67.69	090
61720		A	Incise skull/brain surgery	16.77	NA	NA	10.72	13.05	3.51	NA	NA	31.00	33.33	090

[1] CPT codes and descriptions only are copyright 2000 American Medical Association. All Rights Reserved. Applicable FARS/DFARS Apply.
[2] Copyright 1994 American Dental Association. All rights reserved.
[3] + Indicates RVUs are not used for Medicare payment.
[4] PE RVUs = Practice Expense Relative Value Units.

ADDENDUM B.—RELATIVE VALUE UNITS (RVU'S) AND RELATED INFORMATION—Continued

CPT[1]/ HCPCS[2]	MOD	Status	Description	Physician Work RVUs[3]	Fully Implemented Non-Facility PE RVUs	Year 2001 Transitional Non-Facility PE RVUs	Fully Implemented Facility PE RVUs	Year 2001 Transitional Facility PE RVUs	Mal-Practice RVUs	Fully Implemented Non-Facility Total	Year 2001 Transitional Non-Facility Total	Fully Implemented Facility Total	Year 2001 Transitional Facility Total	Global
61735		A	Incise skull/brain surgery	20.43	NA	NA	12.60	12.97	4.16	NA	NA	37.19	37.56	090
61750		A	Incise skull/brain biopsy	18.20	NA	NA	11.02	11.94	3.71	NA	NA	32.93	33.85	090
61751		A	Brain biopsy w/ ct/mr guide	17.62	NA	NA	10.75	13.32	3.57	NA	NA	31.94	34.51	090
61760		A	Implant brain electrodes	22.27	NA	NA	13.16	13.94	4.59	NA	NA	40.02	40.80	090
61770		A	Incise skull for treatment	21.44	NA	NA	12.79	14.85	4.09	NA	NA	38.32	40.38	090
61790		A	Treat trigeminal nerve	10.86	NA	NA	6.12	7.83	1.82	NA	NA	18.80	20.51	090
61791		A	Treat trigeminal tract	14.61	NA	NA	9.28	9.61	3.03	NA	NA	26.92	27.25	090
61793		A	Focus radiation beam	17.24	NA	NA	10.87	13.30	3.51	NA	NA	31.62	34.05	090
61795		A	Brain surgery using computer	4.04	NA	NA	2.09	2.77	0.81	NA	NA	6.94	7.62	ZZZ
61850		A	Implant neuroelectrodes	12.39	NA	NA	7.94	9.11	2.23	NA	NA	22.56	23.73	090
61860		A	Implant neuroelectrodes	20.87	NA	NA	12.74	11.76	4.04	NA	NA	37.65	36.67	090
61862		A	Implant neurostimul, subcort	19.34	NA	NA	11.99	11.99	3.97	NA	NA	35.30	35.30	090
61870		A	Implant neuroelectrodes	14.94	NA	NA	11.36	9.66	1.70	NA	NA	28.00	26.30	090
61875		A	Implant neuroelectrodes	15.06	NA	NA	10.00	9.32	2.42	NA	NA	27.48	26.80	090
61880		A	Revise/remove neuroelectrode	6.29	NA	NA	5.24	5.23	1.31	NA	NA	12.84	12.83	090
61885		A	Implant neurostim one array	5.85	NA	NA	4.29	3.75	1.22	NA	NA	11.36	10.82	090
61886		A	Implant neurostim arrays	8.00	NA	NA	6.09	6.09	1.64	NA	NA	15.73	15.73	090
61888		A	Revise/remove neuroreceiver	5.07	NA	NA	3.88	3.52	1.04	NA	NA	9.99	9.63	010
62000		A	Treat skull fracture	12.53	NA	NA	5.41	5.61	0.87	NA	NA	18.81	19.01	090
62005		A	Treat skull fracture	16.17	NA	NA	8.93	9.70	2.33	NA	NA	27.43	28.20	090
62010		A	Treatment of head injury	19.81	NA	NA	11.61	13.92	4.05	NA	NA	35.47	37.78	090
62100		A	Repair brain fluid leakage	22.03	NA	NA	13.94	16.32	4.07	NA	NA	40.04	42.42	090
62115		A	Reduction of skull defect	21.66	NA	NA	10.63	12.18	4.53	NA	NA	36.82	38.37	090
62116		A	Reduction of skull defect	23.59	NA	NA	13.78	14.94	4.85	NA	NA	42.22	43.38	090
62117		A	Reduction of skull defect	26.60	NA	NA	15.18	16.60	5.56	NA	NA	47.34	48.76	090
62120		A	Repair skull cavity lesion	23.35	NA	NA	14.18	15.22	3.07	NA	NA	40.60	41.64	090
62121		A	Incise skull repair	21.58	NA	NA	13.78	15.09	2.47	NA	NA	37.83	39.14	090
62140		A	Repair of skull defect	13.51	NA	NA	8.54	10.05	2.60	NA	NA	24.65	26.16	090
62141		A	Repair of skull defect	14.91	NA	NA	9.70	11.73	2.85	NA	NA	27.46	29.49	090
62142		A	Remove skull plate/flap	10.79	NA	NA	7.20	8.62	2.10	NA	NA	20.09	21.51	090
62143		A	Replace skull plate/flap	13.05	NA	NA	8.67	8.99	2.55	NA	NA	24.27	24.59	090
62145		A	Repair of skull & brain	18.82	NA	NA	11.29	12.04	3.81	NA	NA	33.92	34.67	090
62146		A	Repair of skull with graft	16.12	NA	NA	10.39	10.78	2.94	NA	NA	29.45	29.84	090
62147		A	Repair of skull with graft	19.34	NA	NA	12.21	12.73	3.64	NA	NA	35.19	35.71	090
62180		A	Establish brain cavity shunt	21.06	NA	NA	12.86	13.50	4.32	NA	NA	38.24	38.88	090
62190		A	Establish brain cavity shunt	11.07	NA	NA	7.65	9.04	2.18	NA	NA	20.90	22.29	090
62192		A	Establish brain cavity shunt	12.25	NA	NA	8.21	9.82	2.46	NA	NA	22.92	24.53	090
62194		A	Replace/irrigate catheter	5.03	NA	NA	2.08	2.07	0.50	NA	NA	7.61	7.60	010
62200		A	Establish brain cavity shunt	18.32	NA	NA	11.41	13.16	3.70	NA	NA	33.43	35.18	090
62201		A	Establish brain cavity shunt	14.86	NA	NA	9.18	9.27	2.52	NA	NA	26.56	26.65	090
62220		A	Establish brain cavity shunt	13.00	NA	NA	8.63	10.35	2.53	NA	NA	24.16	25.88	090
62223		A	Establish brain cavity shunt	12.87	NA	NA	8.45	10.18	2.58	NA	NA	23.90	25.63	090
62225		A	Replace/irrigate catheter	5.41	NA	NA	4.06	4.35	1.09	NA	NA	10.56	10.85	090
62230		A	Replace/revise brain shunt	10.54	NA	NA	6.59	7.61	2.10	NA	NA	19.23	20.25	090
62252		A	Csf shunt reprogram	0.74	1.40	1.40	1.40	1.40	0.04	2.18	2.18	2.18	2.18	XXX
62252	26	A	Csf shunt reprogram	0.74	0.30	0.30	0.30	0.30	0.02	1.06	1.06	1.06	1.06	XXX
62252	TC	A	Csf shunt reprogram	0.00	1.10	1.10	NA	NA	0.02	1.12	1.12	NA	NA	XXX
62256		A	Remove brain cavity shunt	6.60	NA	NA	5.34	5.74	1.34	NA	NA	13.28	13.68	090
62258		A	Replace brain cavity shunt	14.54	NA	NA	8.65	10.50	2.91	NA	NA	26.10	27.95	090
62263		A	Lysis epidural adhesions	6.14	5.70	5.70	2.29	2.29	0.42	12.26	12.26	8.85	8.85	010
62268		A	Drain spinal cord cyst	4.74	NA	NA	2.71	2.84	0.29	NA	NA	7.74	7.87	000
62269		A	Needle biopsy, spinal cord	5.02	NA	NA	2.33	2.22	0.29	NA	NA	7.64	7.53	000
62270		A	Spinal fluid tap, diagnostic	1.13	3.49	2.81	0.46	0.54	0.06	4.68	4.00	1.65	1.73	000
62272		A	Drain spinal fluid	1.35	3.00	2.53	0.61	0.73	0.13	4.48	4.01	2.09	2.21	000
62273		A	Treat epidural spine lesion	2.15	1.31	1.29	1.25	1.24	0.14	3.60	3.58	3.54	3.53	000
62280		A	Treat spinal cord lesion	2.63	3.44	2.77	0.70	0.72	0.17	6.24	5.57	3.50	3.52	010
62281		A	Treat spinal cord lesion	2.66	3.76	3.06	0.61	0.69	0.16	6.58	5.88	3.43	3.51	010
62282		A	Treat spinal canal lesion	2.33	5.24	4.39	0.61	0.92	0.14	7.71	6.86	3.08	3.39	010
62284		A	Injection for myelogram	1.54	4.04	3.57	0.70	0.98	0.10	5.68	5.21	2.34	2.62	000
62287		A	Percutaneous diskectomy	8.08	NA	NA	4.70	5.41	0.66	NA	NA	13.44	14.15	090
62290		A	Inject for spine disk x-ray	3.00	5.20	4.41	1.27	1.46	0.20	8.40	7.61	4.47	4.66	000
62291		A	Inject for spine disk x-ray	2.91	5.29	4.45	1.16	1.35	0.17	8.37	7.53	4.24	4.43	000
62292		A	Injection into disk lesion	7.86	NA	NA	4.74	5.90	0.65	NA	NA	13.25	14.41	090
62294		A	Injection into spinal artery	11.83	NA	NA	6.08	6.15	0.85	NA	NA	18.76	18.83	090
62310		A	Inject spine c/t	1.91	3.60	3.60	0.43	0.43	0.11	5.62	5.62	2.45	2.45	000
62311		A	Inject spine l/s (cd)	1.54	3.88	3.88	0.37	0.37	0.09	5.51	5.51	2.00	2.00	000
62318		A	Inject spine w/cath, c/t	2.04	3.66	3.66	0.46	0.46	0.12	5.82	5.82	2.62	2.62	000
62319		A	Inject spine w/cath l/s (cd)	1.87	3.14	3.14	0.39	0.39	0.11	5.12	5.12	2.37	2.37	000
62350		A	Implant spinal canal cath	6.87	NA	NA	3.66	3.69	0.64	NA	NA	11.17	11.20	090
62351		A	Implant spinal canal cath	10.00	NA	NA	6.78	6.49	1.79	NA	NA	18.57	18.28	090
62355		A	Remove spinal canal catheter	5.45	NA	NA	2.77	3.03	0.47	NA	NA	8.69	8.95	090
62360		A	Insert spine infusion device	2.62	NA	NA	2.19	1.95	0.21	NA	NA	5.02	4.78	090
62361		A	Implant spine infusion pump	5.42	NA	NA	3.53	3.38	0.50	NA	NA	9.45	9.30	090
62362		A	Implant spine infusion pump	7.04	NA	NA	4.07	4.01	0.86	NA	NA	11.97	11.91	090
62365		A	Remove spine infusion device	5.42	NA	NA	3.04	3.22	0.58	NA	NA	9.04	9.22	090
62367		C	Analyze spine infusion pump	0.00	0.00	0.00	0.00	0.00	0.00	0.00	0.00	0.00	0.00	XXX
62367	26	A	Analyze spine infusion pump	0.48	0.14	0.20	0.14	0.20	0.03	0.65	0.71	0.65	0.71	XXX
62367	TC	C	Analyze spine infusion pump	0.00	0.00	0.00	0.00	0.00	0.00	0.00	0.00	0.00	0.00	XXX
62368		C	Analyze spine infusion pump	0.00	0.00	0.00	0.00	0.00	0.00	0.00	0.00	0.00	0.00	XXX
62368	26	A	Analyze spine infusion pump	0.75	0.20	0.30	0.20	0.30	0.05	1.00	1.10	1.00	1.10	XXX
62368	TC	C	Analyze spine infusion pump	0.00	0.00	0.00	0.00	0.00	0.00	0.00	0.00	0.00	0.00	XXX
63001		A	Removal of spinal lamina	15.82	NA	NA	11.50	13.35	3.03	NA	NA	30.35	32.20	090
63003		A	Removal of spinal lamina	15.95	NA	NA	11.65	13.50	2.98	NA	NA	30.58	32.43	090

[1] CPT codes and descriptions only are copyright 2000 American Medical Association. All Rights Reserved. Applicable FARS/DFARS Apply.
[2] Copyright 1994 American Dental Association. All rights reserved.
[3] + Indicates RVUs are not used for Medicare payment.
[4] PE RVUs = Practice Expense Relative Value Units.

ADDENDUM B.—RELATIVE VALUE UNITS (RVU'S) AND RELATED INFORMATION—Continued

CPT[1]/ HCPCS[2]	MOD	Status	Description	Physician Work RVUs[3]	Fully Implemented Non-Facility PE RVUs	Year 2001 Transitional Non-Facility PE RVUs	Fully Implemented Facility PE RVUs	Year 2001 Transitional Facility PE RVUs	Mal-Practice RVUs	Fully Implemented Non-Facility Total	Year 2001 Transitional Non-Facility Total	Fully Implemented Facility Total	Year 2001 Transitional Facility Total	Global
63005		A	Removal of spinal lamina	14.92	NA	NA	11.12	12.79	2.62	NA	NA	28.66	30.33	090
63011		A	Removal of spinal lamina	14.52	NA	NA	9.27	9.66	1.43	NA	NA	25.22	25.61	090
63012		A	Removal of spinal lamina	15.40	NA	NA	10.09	12.16	2.71	NA	NA	28.20	30.27	090
63015		A	Removal of spinal lamina	19.35	NA	NA	13.36	15.78	3.84	NA	NA	36.55	38.97	090
63016		A	Removal of spinal lamina	19.20	NA	NA	13.34	15.74	3.62	NA	NA	36.16	38.56	090
63017		A	Removal of spinal lamina	15.94	NA	NA	11.64	13.49	2.91	NA	NA	30.49	32.34	090
63020		A	Neck spine disk surgery	14.81	NA	NA	11.05	12.64	2.89	NA	NA	28.75	30.34	090
63030		A	Low back disk surgery	12.00	NA	NA	9.62	10.80	2.21	NA	NA	23.83	25.01	090
63035		A	Spinal disk surgery add-on	3.15	NA	NA	1.64	2.17	0.57	NA	NA	5.36	5.89	ZZZ
63040		A	Laminotomy, single cervical	18.81	NA	NA	12.98	15.35	3.36	NA	NA	35.15	37.52	090
63042		A	Laminotomy, single lumbar	17.47	NA	NA	12.60	14.67	3.11	NA	NA	33.18	35.25	090
63043		B	Laminotomy, addl cervical	0.00	0.00	0.00	0.00	0.00	0.00	0.00	0.00	0.00	0.00	ZZZ
63044		B	Laminotomy, addl lumbar	0.00	0.00	0.00	0.00	0.00	0.00	0.00	0.00	0.00	0.00	ZZZ
63045		A	Removal of spinal lamina	16.50	NA	NA	11.95	13.89	3.19	NA	NA	31.64	33.58	090
63046		A	Removal of spinal lamina	15.80	NA	NA	11.60	13.42	2.89	NA	NA	30.29	32.11	090
63047		A	Removal of spinal lamina	14.61	NA	NA	11.05	12.65	2.61	NA	NA	28.27	29.87	090
63048		A	Remove spinal lamina add-on	3.26	NA	NA	1.73	2.27	0.58	NA	NA	5.57	6.11	ZZZ
63055		A	Decompress spinal cord	21.99	NA	NA	14.74	17.49	4.09	NA	NA	40.82	43.57	090
63056		A	Decompress spinal cord	20.36	NA	NA	14.01	16.43	3.34	NA	NA	37.71	40.13	090
63057		A	Decompress spine cord add-on	5.26	NA	NA	2.66	3.04	0.81	NA	NA	8.73	9.11	ZZZ
63064		A	Decompress spinal cord	24.61	NA	NA	16.68	18.98	4.72	NA	NA	46.01	48.31	090
63066		A	Decompress spine cord add-on	3.26	NA	NA	1.74	1.98	0.63	NA	NA	5.63	5.87	ZZZ
63075		A	Neck spine disk surgery	19.41	NA	NA	13.50	14.89	3.73	NA	NA	36.64	38.03	090
63076		A	Neck spine disk surgery	4.05	NA	NA	2.13	2.81	0.78	NA	NA	6.96	7.64	ZZZ
63077		A	Spine disk surgery, thorax	21.44	NA	NA	15.13	16.35	3.44	NA	NA	40.01	41.23	090
63078		A	Spine disk surgery, thorax	3.28	NA	NA	1.70	1.98	0.50	NA	NA	5.48	5.76	ZZZ
63081		A	Removal of vertebral body	23.73	NA	NA	16.33	19.33	4.46	NA	NA	44.52	47.52	090
63082		A	Remove vertebral body add-on	4.37	NA	NA	2.31	3.04	0.82	NA	NA	7.50	8.23	ZZZ
63085		A	Removal of vertebral body	26.92	NA	NA	18.32	21.17	4.70	NA	NA	49.94	52.79	090
63086		A	Remove vertebral body add-on	3.19	NA	NA	1.66	2.20	0.55	NA	NA	5.40	5.94	ZZZ
63087		A	Removal of vertebral body	35.57	NA	NA	22.20	24.32	5.87	NA	NA	63.64	65.76	090
63088		A	Remove vertebral body add-on	4.33	NA	NA	2.28	3.00	0.77	NA	NA	7.38	8.10	ZZZ
63090		A	Removal of vertebral body	28.16	NA	NA	18.11	21.51	4.27	NA	NA	50.54	53.94	090
63091		A	Remove vertebral body add-on	3.03	NA	NA	1.53	1.89	0.45	NA	NA	5.01	5.37	ZZZ
63170		A	Incise spinal cord tract(s)	19.83	NA	NA	13.58	15.31	3.89	NA	NA	37.30	39.03	090
63172		A	Drainage of spinal cyst	17.66	NA	NA	13.03	15.05	3.46	NA	NA	34.15	36.17	090
63173		A	Drainage of spinal cyst	21.99	NA	NA	14.78	15.28	4.14	NA	NA	40.91	41.41	090
63180		A	Revise spinal cord ligaments	18.27	NA	NA	12.42	12.47	3.83	NA	NA	34.52	34.57	090
63182		A	Revise spinal cord ligaments	20.50	NA	NA	12.87	14.11	3.48	NA	NA	36.85	38.09	090
63185		A	Incise spinal column/nerves	15.04	NA	NA	9.73	11.52	2.08	NA	NA	26.85	28.64	090
63190		A	Incise spinal column/nerves	17.45	NA	NA	12.03	14.23	2.88	NA	NA	32.36	34.56	090
63191		A	Incise spinal column/nerves	17.54	NA	NA	12.37	12.82	3.50	NA	NA	33.41	33.86	090
63194		A	Incise spinal column & cord	19.19	NA	NA	13.11	13.37	4.01	NA	NA	36.31	36.57	090
63195		A	Incise spinal column & cord	18.84	NA	NA	12.13	12.86	3.44	NA	NA	34.41	35.14	090
63196		A	Incise spinal column & cord	22.30	NA	NA	12.37	13.51	4.66	NA	NA	39.33	40.47	090
63197		A	Incise spinal column & cord	21.11	NA	NA	13.71	14.18	4.42	NA	NA	39.24	39.71	090
63198		A	Incise spinal column & cord	25.38	NA	NA	13.60	14.63	5.31	NA	NA	44.29	45.32	090
63199		A	Incise spinal column & cord	26.89	NA	NA	14.20	16.46	5.62	NA	NA	46.71	48.97	090
63200		A	Release of spinal cord	19.18	NA	NA	13.09	13.21	3.61	NA	NA	35.88	36.00	090
63250		A	Revise spinal cord vessels	40.76	NA	NA	20.95	23.31	7.65	NA	NA	69.36	71.72	090
63251		A	Revise spinal cord vessels	41.20	NA	NA	23.04	23.45	7.98	NA	NA	72.22	72.63	090
63252		A	Revise spinal cord vessels	41.19	NA	NA	22.40	24.47	7.75	NA	NA	71.34	73.41	090
63265		A	Excise intraspinal lesion	21.56	NA	NA	13.17	15.85	4.29	NA	NA	39.02	41.70	090
63266		A	Excise intraspinal lesion	22.30	NA	NA	13.51	16.79	4.47	NA	NA	40.28	43.56	090
63267		A	Excise intraspinal lesion	17.95	NA	NA	11.32	13.85	3.50	NA	NA	32.77	35.30	090
63268		A	Excise intraspinal lesion	18.52	NA	NA	10.83	11.53	3.18	NA	NA	32.53	33.23	090
63270		A	Excise intraspinal lesion	26.80	NA	NA	15.90	16.85	5.41	NA	NA	48.11	49.06	090
63271		A	Excise intraspinal lesion	26.92	NA	NA	16.01	19.23	5.56	NA	NA	48.49	51.71	090
63272		A	Excise intraspinal lesion	25.32	NA	NA	15.17	17.66	5.07	NA	NA	45.56	48.05	090
63273		A	Excise intraspinal lesion	24.29	NA	NA	14.60	15.72	5.08	NA	NA	43.97	45.09	090
63275		A	Biopsy/excise spinal tumor	23.68	NA	NA	14.12	17.66	4.68	NA	NA	42.48	46.02	090
63276		A	Biopsy/excise spinal tumor	23.45	NA	NA	14.04	17.40	4.63	NA	NA	42.12	45.48	090
63277		A	Biopsy/excise spinal tumor	20.83	NA	NA	12.82	15.83	4.03	NA	NA	37.68	40.69	090
63278		A	Biopsy/excise spinal tumor	20.56	NA	NA	12.48	15.50	4.02	NA	NA	37.06	40.08	090
63280		A	Biopsy/excise spinal tumor	28.35	NA	NA	16.64	20.10	5.80	NA	NA	50.79	54.25	090
63281		A	Biopsy/excise spinal tumor	28.05	NA	NA	16.39	19.80	5.67	NA	NA	50.11	53.52	090
63282		A	Biopsy/excise spinal tumor	26.39	NA	NA	15.60	18.24	5.33	NA	NA	47.32	49.96	090
63283		A	Biopsy/excise spinal tumor	25.00	NA	NA	14.83	16.22	5.12	NA	NA	44.95	46.34	090
63285		A	Biopsy/excise spinal tumor	36.00	NA	NA	20.26	21.84	7.31	NA	NA	63.57	65.15	090
63286		A	Biopsy/excise spinal tumor	35.63	NA	NA	20.36	23.07	7.07	NA	NA	63.06	65.77	090
63287		A	Biopsy/excise spinal tumor	36.70	NA	NA	20.74	22.53	7.48	NA	NA	64.92	66.71	090
63290		A	Biopsy/excise spinal tumor	37.38	NA	NA	21.36	23.39	7.65	NA	NA	66.39	68.42	090
63300		A	Removal of vertebral body	24.43	NA	NA	14.84	15.82	4.78	NA	NA	44.05	45.03	090
63301		A	Removal of vertebral body	27.60	NA	NA	16.07	17.06	5.03	NA	NA	48.70	49.69	090
63302		A	Removal of vertebral body	27.81	NA	NA	16.16	17.92	5.25	NA	NA	49.22	50.98	090
63303		A	Removal of vertebral body	30.50	NA	NA	17.50	18.15	5.21	NA	NA	53.21	53.86	090
63304		A	Removal of vertebral body	30.33	NA	NA	16.19	17.93	4.72	NA	NA	51.24	52.98	090
63305		A	Removal of vertebral body	32.03	NA	NA	19.10	20.43	5.39	NA	NA	56.52	57.85	090
63306		A	Removal of vertebral body	32.22	NA	NA	16.63	18.65	2.39	NA	NA	51.24	53.26	090
63307		A	Removal of vertebral body	31.63	NA	NA	18.42	20.44	4.23	NA	NA	54.28	56.30	090
63308		A	Remove vertebral body add-on	5.25	NA	NA	2.74	3.16	1.01	NA	NA	9.00	9.42	ZZZ
63600		A	Remove spinal cord lesion	14.02	NA	NA	5.90	7.33	1.22	NA	NA	21.14	22.57	090
63610		A	Stimulation of spinal cord	8.73	NA	NA	5.09	5.64	0.43	NA	NA	14.25	14.80	000

[1] CPT codes and descriptions only are copyright 2000 American Medical Association. All Rights Reserved. Applicable FARS/DFARS Apply.
[2] Copyright 1994 American Dental Association. All rights reserved.
[3] + Indicates RVUs are not used for Medicare payment.
[4] PE RVUs = Practice Expense Relative Value Units.

ADDENDUM B.—RELATIVE VALUE UNITS (RVU'S) AND RELATED INFORMATION—Continued

CPT[1]/ HCPCS[2]	MOD	Status	Description	Physician Work RVUs[3]	Fully Implemented Non-Facility PE RVUs	Year 2001 Transitional Non-Facility PE RVUs	Fully Implemented Facility PE RVUs	Year 2001 Transitional Facility PE RVUs	Mal-Practice RVUs	Fully Implemented Non-Facility Total	Year 2001 Transitional Non-Facility Total	Fully Implemented Facility Total	Year 2001 Transitional Facility Total	Global
63615		A	Remove lesion of spinal cord	16.28	NA	NA	10.42	10.95	2.85	NA	NA	29.55	30.08	090
63650		A	Implant neuroelectrodes	6.74	NA	NA	2.99	4.25	0.48	NA	NA	10.21	11.47	090
63655		A	Implant neuroelectrodes	10.29	NA	NA	7.12	8.41	1.85	NA	NA	19.26	20.55	090
63660		A	Revise/remove neuroelectrode	6.16	NA	NA	3.63	4.56	0.65	NA	NA	10.44	11.37	090
63685		A	Implant neuroreceiver	7.04	NA	NA	4.41	5.32	0.96	NA	NA	12.41	13.32	090
63688		A	Revise/remove neuroreceiver	5.39	NA	NA	3.67	4.36	0.70	NA	NA	9.76	10.45	090
63700		A	Repair of spinal herniation	16.53	NA	NA	10.39	10.87	2.69	NA	NA	29.61	30.09	090
63702		A	Repair of spinal herniation	18.48	NA	NA	10.46	11.31	1.36	NA	NA	30.30	31.15	090
63704		A	Repair of spinal herniation	21.18	NA	NA	12.22	13.02	3.84	NA	NA	37.24	38.04	090
63706		A	Repair of spinal herniation	24.11	NA	NA	13.91	14.86	4.73	NA	NA	42.75	43.70	090
63707		A	Repair spinal fluid leakage	11.26	NA	NA	7.85	9.25	1.96	NA	NA	21.07	22.47	090
63709		A	Repair spinal fluid leakage	14.32	NA	NA	9.61	11.48	2.49	NA	NA	26.42	28.29	090
63710		A	Graft repair of spine defect	14.07	NA	NA	9.34	9.65	2.61	NA	NA	26.02	26.33	090
63740		A	Install spinal shunt	11.36	NA	NA	7.54	9.05	2.15	NA	NA	21.05	22.56	090
63741		A	Install spinal shunt	8.25	NA	NA	4.70	5.99	1.05	NA	NA	14.00	15.29	090
63744		A	Revision of spinal shunt	8.10	NA	NA	5.48	6.32	1.51	NA	NA	15.09	15.93	090
63746		A	Removal of spinal shunt	6.43	NA	NA	4.55	4.91	1.15	NA	NA	12.13	12.49	090
64400		A	Injection for nerve block	1.11	2.71	2.16	0.27	0.27	0.06	3.88	3.33	1.44	1.44	000
64402		A	Injection for nerve block	1.25	3.91	3.10	0.45	0.51	0.07	5.23	4.42	1.77	1.83	000
64405		A	Injection for nerve block	1.32	2.52	2.06	0.31	0.32	0.08	3.92	3.46	1.71	1.72	000
64408		A	Injection for nerve block	1.41	2.94	2.49	0.69	0.66	0.09	4.44	3.99	2.19	2.16	000
64410		A	Injection for nerve block	1.43	2.53	2.09	0.30	0.42	0.08	4.04	3.60	1.81	1.93	000
64412		A	Injection for nerve block	1.18	2.67	2.17	0.27	0.29	0.08	3.93	3.43	1.53	1.55	000
64413		A	Injection for nerve block	1.40	2.85	2.34	0.36	0.37	0.09	4.34	3.83	1.85	1.86	000
64415		A	Injection for nerve block	1.48	2.64	2.05	0.31	0.30	0.08	4.20	3.61	1.87	1.86	000
64417		A	Injection for nerve block	1.44	2.68	2.18	0.33	0.42	0.09	4.21	3.71	1.86	1.95	000
64418		A	Injection for nerve block	1.32	2.46	2.08	0.29	0.33	0.07	3.85	3.47	1.68	1.72	000
64420		A	Injection for nerve block	1.18	2.46	2.02	0.27	0.38	0.07	3.71	3.27	1.52	1.63	000
64421		A	Injection for nerve block	1.68	2.86	2.37	0.39	0.52	0.10	4.64	4.15	2.17	2.30	000
64425		A	Injection for nerve block	1.75	2.40	1.96	0.40	0.46	0.11	4.26	3.82	2.26	2.32	000
64430		A	Injection for nerve block	1.46	2.66	2.19	0.43	0.51	0.11	4.23	3.76	2.00	2.08	000
64435		A	Injection for nerve block	1.45	2.94	2.33	0.54	0.47	0.15	4.54	3.93	2.14	2.07	000
64445		A	Injection for nerve block	1.48	3.41	2.69	0.34	0.32	0.08	4.97	4.25	1.90	1.88	000
64450		A	Injection for nerve block	1.27	1.69	1.41	0.33	0.32	0.08	3.04	2.76	1.68	1.67	000
64470		A	Inj paravertebral c/t	1.85	3.94	3.94	0.50	0.50	0.12	5.91	5.91	2.47	2.47	000
64472		A	Inj paravertebral c/t add-on	1.29	3.63	3.63	0.35	0.35	0.09	5.01	5.01	1.73	1.73	ZZZ
64475		A	Inj paravertebral l/s	1.41	3.77	3.77	0.38	0.38	0.09	5.27	5.27	1.88	1.88	000
64476		A	Inj paravertebral l/s add-on	0.98	4.16	4.16	0.26	0.26	0.06	5.20	5.20	1.30	1.30	ZZZ
64479		A	Inj foramen epidural c/t	2.20	4.04	4.04	0.62	0.62	0.14	6.38	6.38	2.96	2.96	000
64480		A	Inj foramen epidural add-on	1.54	4.23	4.23	0.43	0.43	0.09	5.86	5.86	2.06	2.06	ZZZ
64483		A	Inj foramen epidural l/s	1.90	3.92	3.92	0.54	0.54	0.12	5.94	5.94	2.56	2.56	000
64484		A	Inj foramen epidural add-on	1.33	4.15	4.15	0.37	0.37	0.08	5.56	5.56	1.78	1.78	ZZZ
64505		A	Injection for nerve block	1.36	2.40	1.97	0.35	0.35	0.08	3.84	3.41	1.79	1.79	000
64508		A	Injection for nerve block	1.12	2.94	2.49	0.39	0.44	0.06	4.12	3.67	1.57	1.62	000
64510		A	Injection for nerve block	1.22	2.63	2.17	0.26	0.39	0.07	3.92	3.46	1.55	1.68	000
64520		A	Injection for nerve block	1.35	3.51	2.83	0.29	0.41	0.08	4.94	4.26	1.72	1.84	000
64530		A	Injection for nerve block	1.58	3.23	2.74	0.36	0.59	0.09	4.90	4.41	2.03	2.26	000
64550		A	Apply neurostimulator	0.18	0.52	0.51	0.05	0.10	0.01	0.71	0.70	0.24	0.29	000
64553		A	Implant neuroelectrodes	2.31	4.85	3.92	1.27	1.09	0.17	7.33	6.40	3.75	3.57	010
64555		A	Implant neuroelectrodes	2.27	2.40	1.92	0.71	0.59	0.11	4.78	4.30	3.09	2.97	010
64560		A	Implant neuroelectrodes	2.36	2.42	2.21	0.87	0.85	0.17	4.95	4.74	3.40	3.38	010
64565		A	Implant neuroelectrodes	1.76	3.06	2.50	0.63	0.58	0.08	4.90	4.34	2.47	2.42	010
64573		A	Implant neuroelectrodes	7.50	NA	NA	5.46	4.95	1.48	NA	NA	14.44	13.93	090
64575		A	Implant neuroelectrodes	4.35	NA	NA	3.15	3.20	0.37	NA	NA	7.87	7.92	090
64577		A	Implant neuroelectrodes	4.62	NA	NA	3.56	3.42	0.50	NA	NA	8.68	8.54	090
64580		A	Implant neuroelectrodes	4.12	NA	NA	4.21	3.95	0.21	NA	NA	8.54	8.28	090
64585		A	Revise/remove neuroelectrode	2.06	2.82	2.38	2.18	1.90	0.29	5.17	4.73	4.53	4.25	010
64590		A	Implant neuroreceiver	2.40	NA	NA	2.37	2.28	0.40	NA	NA	5.17	5.08	010
64595		A	Revise/remove neuroreceiver	1.73	NA	NA	2.06	1.85	0.22	NA	NA	4.01	3.80	010
64600		A	Injection treatment of nerve	3.45	3.11	2.79	2.05	2.00	0.28	6.84	6.52	5.78	5.73	010
64605		A	Injection treatment of nerve	5.61	4.18	3.56	2.78	2.51	0.53	10.32	9.70	8.92	8.65	010
64610		A	Injection treatment of nerve	7.16	NA	NA	3.77	4.80	1.12	NA	NA	12.05	13.08	010
64612		A	Destroy nerve, face muscle	1.96	2.95	2.61	1.65	1.44	0.09	5.00	4.66	3.70	3.49	010
64613		A	Destroy nerve, spine muscle	1.96	1.61	1.60	1.37	1.23	0.10	3.67	3.66	3.43	3.29	010
64614		A	Destroy nerve, extrem musc	2.20	3.37	3.37	0.81	0.81	0.16	5.73	5.73	3.17	3.17	010
64620		A	Injection treatment of nerve	2.84	3.10	2.60	0.70	0.80	0.17	6.11	5.61	3.71	3.81	010
64622		A	Destr paravertebrl nerve l/s	3.00	4.47	3.85	0.73	1.04	0.17	7.64	7.02	3.90	4.21	010
64623		A	Destr paravertebral n add-on	0.99	3.54	2.89	0.24	0.41	0.06	4.59	3.94	1.29	1.46	ZZZ
64626		A	Destr paravertebrl nerve c/t	3.28	3.95	3.95	0.88	0.88	0.22	7.45	7.45	4.38	4.38	010
64627		A	Destr paravertebral n add-on	1.16	3.30	3.30	0.31	0.31	0.08	4.54	4.54	1.55	1.55	ZZZ
64630		A	Injection treatment of nerve	3.00	3.54	3.13	0.81	1.08	0.16	6.70	6.29	3.97	4.24	010
64640		A	Injection treatment of nerve	2.76	5.75	4.56	1.02	1.02	0.11	8.62	7.43	3.89	3.89	010
64680		A	Injection treatment of nerve	2.62	2.99	2.66	0.66	0.92	0.15	5.76	5.43	3.43	3.69	010
64702		A	Revise finger/toe nerve	4.23	NA	NA	3.76	3.97	0.51	NA	NA	8.50	8.71	090
64704		A	Revise hand/foot nerve	4.57	NA	NA	3.13	3.71	0.59	NA	NA	8.29	8.87	090
64708		A	Revise arm/leg nerve	6.12	NA	NA	4.92	5.52	0.82	NA	NA	11.86	12.46	090
64712		A	Revision of sciatic nerve	7.75	NA	NA	4.96	6.04	0.54	NA	NA	13.25	14.33	090
64713		A	Revision of arm nerve(s)	11.00	NA	NA	5.90	6.98	1.01	NA	NA	17.91	18.99	090
64714		A	Revise low back nerve(s)	10.33	NA	NA	3.92	4.60	0.64	NA	NA	14.89	15.57	090
64716		A	Revision of cranial nerve	6.31	NA	NA	5.02	5.08	0.59	NA	NA	11.92	11.98	090
64718		A	Revise ulnar nerve at elbow	5.99	NA	NA	5.01	5.55	0.87	NA	NA	11.87	12.41	090
64719		A	Revise ulnar nerve at wrist	4.85	NA	NA	4.50	4.72	0.63	NA	NA	9.98	10.20	090
64721		A	Carpal tunnel surgery	4.29	5.93	5.73	5.62	5.50	0.59	10.81	10.61	10.50	10.38	090

[1] CPT codes and descriptions only are copyright 2000 American Medical Association. All Rights Reserved. Applicable FARS/DFARS Apply.
[2] Copyright 1994 American Dental Association. All rights reserved.
[3] + Indicates RVUs are not used for Medicare payment.
[4] PE RVUs = Practice Expense Relative Value Units.

ADDENDUM B.—RELATIVE VALUE UNITS (RVU'S) AND RELATED INFORMATION—Continued

CPT[1]/ HCPCS[2]	MOD	Status	Description	Physician Work RVUs[3]	Fully Implemented Non-Facility PE RVUs	Year 2001 Transitional Non-Facility PE RVUs	Fully Implemented Facility PE RVUs	Year 2001 Transitional Facility PE RVUs	Mal-Practice RVUs	Fully Implemented Non-Facility Total	Year 2001 Transitional Non-Facility Total	Fully Implemented Facility Total	Year 2001 Transitional Facility Total	Global
64722		A	Relieve pressure on nerve(s)	4.70	NA	NA	2.97	3.63	0.32	NA	NA	7.99	8.65	090
64726		A	Release foot/toe nerve	4.18	NA	NA	3.03	2.47	0.57	NA	NA	7.78	7.22	090
64727		A	Internal nerve revision	3.10	NA	NA	1.62	2.10	0.40	NA	NA	5.12	5.60	ZZZ
64732		A	Incision of brow nerve	4.41	NA	NA	3.49	3.79	0.77	NA	NA	8.67	8.97	090
64734		A	Incision of cheek nerve	4.92	NA	NA	3.54	3.91	0.83	NA	NA	9.29	9.66	090
64736		A	Incision of chin nerve	4.60	NA	NA	2.99	3.45	0.71	NA	NA	8.30	8.76	090
64738		A	Incision of jaw nerve	5.73	NA	NA	3.64	4.11	0.84	NA	NA	10.21	10.68	090
64740		A	Incision of tongue nerve	5.59	NA	NA	4.09	4.47	0.43	NA	NA	10.11	10.49	090
64742		A	Incision of facial nerve	6.22	NA	NA	4.91	5.04	0.69	NA	NA	11.82	11.95	090
64744		A	Incise nerve, back of head	5.24	NA	NA	3.93	4.51	0.98	NA	NA	10.15	10.73	090
64746		A	Incise diaphragm nerve	5.93	NA	NA	5.78	5.36	0.75	NA	NA	12.46	12.04	090
64752		A	Incision of vagus nerve	7.06	NA	NA	5.34	5.07	0.83	NA	NA	13.23	12.96	090
64755		A	Incision of stomach nerves	13.52	NA	NA	6.35	7.60	1.16	NA	NA	21.03	22.28	090
64760		A	Incision of vagus nerve	6.96	NA	NA	4.04	4.84	0.51	NA	NA	11.51	12.31	090
64761		A	Incision of pelvis nerve	6.41	NA	NA	3.14	3.62	0.26	NA	NA	9.81	10.29	090
64763		A	Incise hip/thigh nerve	6.93	NA	NA	6.23	5.98	0.77	NA	NA	13.93	13.68	090
64766		A	Incise hip/thigh nerve	8.67	NA	NA	6.14	6.42	0.99	NA	NA	15.80	16.08	090
64771		A	Sever cranial nerve	7.35	NA	NA	5.56	5.91	1.32	NA	NA	14.23	14.58	090
64772		A	Incision of spinal nerve	7.21	NA	NA	5.01	5.60	1.20	NA	NA	13.42	14.01	090
64774		A	Remove skin nerve lesion	5.17	NA	NA	3.67	3.50	0.60	NA	NA	9.44	9.27	090
64776		A	Remove digit nerve lesion	5.12	NA	NA	3.78	3.59	0.63	NA	NA	9.53	9.34	090
64778		A	Digit nerve surgery add-on	3.11	NA	NA	1.51	1.87	0.38	NA	NA	5.00	5.36	ZZZ
64782		A	Remove limb nerve lesion	6.23	NA	NA	3.63	4.00	0.79	NA	NA	10.65	11.02	090
64783		A	Limb nerve surgery add-on	3.72	NA	NA	2.02	2.40	0.48	NA	NA	6.22	6.60	ZZZ
64784		A	Remove nerve lesion	9.82	NA	NA	6.40	6.33	1.17	NA	NA	17.39	17.32	090
64786		A	Remove sciatic nerve lesion	15.46	NA	NA	10.34	11.19	2.22	NA	NA	28.02	28.87	090
64787		A	Implant nerve end	4.30	NA	NA	2.21	2.60	0.56	NA	NA	7.07	7.46	ZZZ
64788		A	Remove skin nerve lesion	4.61	NA	NA	3.32	3.48	0.54	NA	NA	8.47	8.63	090
64790		A	Removal of nerve lesion	11.31	NA	NA	7.17	7.31	1.68	NA	NA	20.16	20.30	090
64792		A	Removal of nerve lesion	14.92	NA	NA	9.13	9.29	1.88	NA	NA	25.93	26.09	090
64795		A	Biopsy of nerve	3.01	NA	NA	1.86	2.04	0.40	NA	NA	5.27	5.45	000
64802		A	Remove sympathetic nerves	9.15	NA	NA	5.72	5.76	0.87	NA	NA	15.74	15.78	090
64804		A	Remove sympathetic nerves	14.64	NA	NA	8.75	10.03	1.79	NA	NA	25.18	26.46	090
64809		A	Remove sympathetic nerves	13.67	NA	NA	5.41	6.92	0.96	NA	NA	20.04	21.55	090
64818		A	Remove sympathetic nerves	10.30	NA	NA	6.28	7.04	1.08	NA	NA	17.66	18.42	090
64820		A	Remove sympathetic nerves	10.37	NA	NA	7.81	7.83	1.17	NA	NA	19.35	19.37	090
64831		A	Repair of digit nerve	9.44	NA	NA	7.11	6.25	1.14	NA	NA	17.69	16.83	090
64832		A	Repair nerve add-on	5.66	NA	NA	3.13	2.73	0.68	NA	NA	9.47	9.07	ZZZ
64834		A	Repair of hand or foot nerve	10.19	NA	NA	7.16	6.32	1.23	NA	NA	18.58	17.74	090
64835		A	Repair of hand or foot nerve	10.94	NA	NA	7.77	7.45	1.36	NA	NA	20.07	19.75	090
64836		A	Repair of hand or foot nerve	10.94	NA	NA	7.67	7.57	1.32	NA	NA	19.93	19.83	090
64837		A	Repair nerve add-on	6.26	NA	NA	3.40	3.76	0.80	NA	NA	10.46	10.82	ZZZ
64840		A	Repair of leg nerve	13.02	NA	NA	9.27	9.76	0.86	NA	NA	23.15	23.64	090
64856		A	Repair/transpose nerve	13.80	NA	NA	9.34	9.23	1.71	NA	NA	24.85	24.74	090
64857		A	Repair arm/leg nerve	14.49	NA	NA	9.71	9.87	1.76	NA	NA	25.96	26.12	090
64858		A	Repair sciatic nerve	16.49	NA	NA	10.28	10.69	2.78	NA	NA	29.55	29.96	090
64859		A	Nerve surgery	4.26	NA	NA	2.32	2.69	0.50	NA	NA	7.08	7.45	ZZZ
64861		A	Repair of arm nerves	19.24	NA	NA	13.02	13.41	2.45	NA	NA	34.71	35.10	090
64862		A	Repair of low back nerves	19.44	NA	NA	9.71	13.13	2.47	NA	NA	31.62	35.04	090
64864		A	Repair of facial nerve	12.55	NA	NA	8.69	8.65	1.13	NA	NA	22.37	22.33	090
64865		A	Repair of facial nerve	15.24	NA	NA	9.97	10.83	1.37	NA	NA	26.58	27.44	090
64866		A	Fusion of facial/other nerve	15.74	NA	NA	9.80	10.39	1.06	NA	NA	26.60	27.19	090
64868		A	Fusion of facial/other nerve	14.04	NA	NA	9.38	10.07	1.40	NA	NA	24.82	25.51	090
64870		A	Fusion of facial/other nerve	15.99	NA	NA	8.04	9.81	1.08	NA	NA	25.11	26.88	090
64872		A	Subsequent repair of nerve	1.99	NA	NA	1.10	1.22	0.24	NA	NA	3.33	3.45	ZZZ
64874		A	Repair & revise nerve add-on	2.98	NA	NA	1.58	1.78	0.34	NA	NA	4.90	5.10	ZZZ
64876		A	Repair nerve/shorten bone	3.38	NA	NA	1.35	1.68	0.39	NA	NA	5.12	5.45	ZZZ
64885		A	Nerve graft, head or neck	17.53	NA	NA	11.18	11.83	1.51	NA	NA	30.22	30.87	090
64886		A	Nerve graft, head or neck	20.75	NA	NA	13.03	13.88	1.73	NA	NA	35.51	36.36	090
64890		A	Nerve graft, hand or foot	15.15	NA	NA	10.09	10.90	1.74	NA	NA	26.98	27.79	090
64891		A	Nerve graft, hand or foot	16.14	NA	NA	7.51	8.46	1.38	NA	NA	25.03	25.98	090
64892		A	Nerve graft, arm or leg	14.65	NA	NA	8.75	9.56	1.65	NA	NA	25.05	25.86	090
64893		A	Nerve graft, arm or leg	15.60	NA	NA	10.29	11.50	1.77	NA	NA	27.66	28.87	090
64895		A	Nerve graft, hand or foot	19.25	NA	NA	11.20	11.97	2.04	NA	NA	32.49	33.26	090
64896		A	Nerve graft, hand or foot	20.49	NA	NA	9.31	11.74	1.85	NA	NA	31.65	34.08	090
64897		A	Nerve graft, arm or leg	18.24	NA	NA	11.13	11.78	2.64	NA	NA	32.01	32.66	090
64898		A	Nerve graft, arm or leg	19.50	NA	NA	12.26	13.10	2.71	NA	NA	34.47	35.31	090
64901		A	Nerve graft add-on	10.22	NA	NA	5.36	6.78	0.99	NA	NA	16.57	17.99	ZZZ
64902		A	Nerve graft add-on	11.83	NA	NA	5.98	7.72	1.10	NA	NA	18.91	20.65	ZZZ
64905		A	Nerve pedicle transfer	14.02	NA	NA	8.60	9.00	1.52	NA	NA	24.14	24.54	090
64907		A	Nerve pedicle transfer	18.83	NA	NA	11.65	12.27	1.79	NA	NA	32.27	32.89	090
64999		C	Nervous system surgery	0.00	0.00	0.00	0.00	0.00	0.00	0.00	0.00	0.00	0.00	YYY
65091		A	Revise eye	6.46	NA	NA	9.55	9.09	0.26	NA	NA	16.27	15.81	090
65093		A	Revise eye with implant	6.87	NA	NA	9.76	9.37	0.28	NA	NA	16.91	16.52	090
65101		A	Removal of eye	7.03	NA	NA	9.61	9.31	0.28	NA	NA	16.92	16.62	090
65103		A	Remove eye/insert implant	7.57	NA	NA	9.97	9.74	0.30	NA	NA	17.84	17.61	090
65105		A	Remove eye/attach implant	8.49	NA	NA	10.51	10.42	0.34	NA	NA	19.34	19.25	090
65110		A	Removal of eye	13.95	NA	NA	14.10	14.74	0.68	NA	NA	28.73	29.37	090
65112		A	Remove eye/revise socket	16.38	NA	NA	17.24	16.23	0.96	NA	NA	34.58	33.57	090
65114		A	Remove eye/revise socket	17.53	NA	NA	16.37	15.82	0.94	NA	NA	34.84	34.29	090
65125		A	Revise ocular implant	3.12	4.92	4.36	1.53	1.82	0.15	8.19	7.63	4.80	5.09	090
65130		A	Insert ocular implant	7.15	NA	NA	9.68	9.40	0.28	NA	NA	17.11	16.83	090
65135		A	Insert ocular implant	7.33	NA	NA	9.45	8.56	0.29	NA	NA	17.07	16.18	090

[1] CPT codes and descriptions only are copyright 2000 American Medical Association. All Rights Reserved. Applicable FARS/DFARS Apply.
[2] Copyright 1994 American Dental Association. All rights reserved.
[3] + Indicates RVUs are not used for Medicare payment.
[4] PE RVUs = Practice Expense Relative Value Units.

ADDENDUM B.—RELATIVE VALUE UNITS (RVU'S) AND RELATED INFORMATION—Continued

CPT[1]/ HCPCS[2]	MOD	Status	Description	Physician Work RVUs[3]	Fully Implemented Non-Facility PE RVUs	Year 2001 Transitional Non-Facility PE RVUs	Fully Implemented Facility PE RVUs	Year 2001 Transitional Facility PE RVUs	Mal-Practice RVUs	Fully Implemented Non-Facility Total	Year 2001 Transitional Non-Facility Total	Fully Implemented Facility Total	Year 2001 Transitional Facility Total	Global
65140		A	Attach ocular implant	8.02	NA	NA	9.88	9.10	0.31	NA	NA	18.21	17.43	090
65150		A	Revise ocular implant	6.26	NA	NA	9.12	8.71	0.25	NA	NA	15.63	15.22	090
65155		A	Reinsert ocular implant	8.66	NA	NA	11.19	10.98	0.40	NA	NA	20.25	20.04	090
65175		A	Removal of ocular implant	6.28	NA	NA	9.12	8.72	0.26	NA	NA	15.66	15.26	090
65205		A	Remove foreign body from eye	0.71	5.07	3.90	0.20	0.20	0.03	5.81	4.64	0.94	0.94	000
65210		A	Remove foreign body from eye	0.84	5.26	4.07	0.31	0.30	0.03	6.13	4.94	1.18	1.17	000
65220		A	Remove foreign body from eye	0.71	6.55	5.05	0.19	0.21	0.05	7.31	5.81	0.95	0.97	000
65222		A	Remove foreign body from eye	0.93	5.20	4.06	0.28	0.29	0.04	6.17	5.03	1.25	1.26	000
65235		A	Remove foreign body from eye	7.57	NA	NA	6.82	6.64	0.30	NA	NA	14.69	14.51	090
65260		A	Remove foreign body from eye	10.96	NA	NA	11.80	11.19	0.43	NA	NA	23.19	22.58	090
65265		A	Remove foreign body from eye	12.59	NA	NA	13.36	12.75	0.50	NA	NA	26.45	25.84	090
65270		A	Repair of eye wound	1.90	3.60	3.02	2.01	1.83	0.08	5.58	5.00	3.99	3.81	010
65272		A	Repair of eye wound	3.82	5.00	4.20	3.86	3.34	0.16	8.98	8.18	7.84	7.32	090
65273		A	Repair of eye wound	4.36	NA	NA	4.34	4.13	0.17	NA	NA	8.87	8.66	090
65275		A	Repair of eye wound	5.34	5.04	3.96	4.66	3.68	0.27	10.65	9.57	10.27	9.29	090
65280		A	Repair of eye wound	7.66	NA	NA	7.28	7.75	0.30	NA	NA	15.24	15.71	090
65285		A	Repair of eye wound	12.90	NA	NA	13.37	13.36	0.51	NA	NA	26.78	26.77	090
65286		A	Repair of eye wound	5.51	7.90	7.23	6.73	5.70	0.21	13.62	12.95	12.45	11.42	090
65290		A	Repair of eye socket wound	5.41	NA	NA	6.78	6.70	0.26	NA	NA	12.45	12.37	090
65400		A	Removal of eye lesion	6.06	7.91	7.69	6.51	6.64	0.24	14.21	13.99	12.81	12.94	090
65410		A	Biopsy of cornea	1.47	1.69	1.70	0.67	0.94	0.06	3.22	3.23	2.20	2.47	000
65420		A	Removal of eye lesion	4.17	7.06	6.46	6.04	5.69	0.17	11.40	10.80	10.38	10.03	090
65426		A	Removal of eye lesion	5.25	7.28	7.03	6.11	6.15	0.20	12.73	12.48	11.56	11.60	090
65430		A	Corneal smear	1.47	5.79	4.49	0.72	0.62	0.06	7.32	6.02	2.25	2.15	000
65435		A	Curette/treat cornea	0.92	1.33	1.21	0.42	0.42	0.04	2.29	2.17	1.38	1.38	000
65436		A	Curette/treat cornea	4.19	5.23	4.34	4.32	3.45	0.17	9.59	8.70	8.68	7.81	090
65450		A	Treatment of corneal lesion	3.27	6.80	5.99	5.62	5.11	0.13	10.20	9.39	9.02	8.51	090
65600		A	Revision of cornea	3.40	4.77	4.29	1.49	1.47	0.14	8.31	7.83	5.03	5.01	090
65710		A	Corneal transplant	12.35	NA	NA	12.84	13.01	0.49	NA	NA	25.68	25.85	090
65730		A	Corneal transplant	14.25	NA	NA	12.30	13.33	0.56	NA	NA	27.11	28.14	090
65750		A	Corneal transplant	15.00	NA	NA	14.14	14.97	0.59	NA	NA	29.73	30.56	090
65755		A	Corneal transplant	14.89	NA	NA	14.05	14.91	0.58	NA	NA	29.52	30.38	090
65760		N	Revision of cornea	0.00	0.00	0.00	0.00	0.00	0.00	0.00	0.00	0.00	0.00	XXX
65765		N	Revision of cornea	0.00	0.00	0.00	0.00	0.00	0.00	0.00	0.00	0.00	0.00	XXX
65767		N	Corneal tissue transplant	0.00	0.00	0.00	0.00	0.00	0.00	0.00	0.00	0.00	0.00	XXX
65770		A	Revise cornea with implant	17.56	NA	NA	15.10	15.07	0.69	NA	NA	33.35	33.32	090
65771		N	Radial keratotomy	0.00	0.00	0.00	0.00	0.00	0.00	0.00	0.00	0.00	0.00	XXX
65772		A	Correction of astigmatism	4.29	6.30	6.01	5.34	4.65	0.17	10.76	10.47	9.80	9.11	090
65775		A	Correction of astigmatism	5.79	NA	NA	8.26	7.92	0.22	NA	NA	14.27	13.93	090
65800		A	Drainage of eye	1.91	2.21	2.13	1.40	1.52	0.08	4.20	4.12	3.39	3.51	000
65805		A	Drainage of eye	1.91	2.21	2.15	1.41	1.30	0.08	4.20	4.14	3.40	3.29	000
65810		A	Drainage of eye	4.87	NA	NA	7.41	7.01	0.19	NA	NA	12.47	12.07	090
65815		A	Drainage of eye	5.05	8.10	7.29	6.94	6.42	0.20	13.35	12.54	12.19	11.67	090
65820		A	Relieve inner eye pressure	8.13	NA	NA	9.29	9.56	0.32	NA	NA	17.74	18.01	090
65850		A	Incision of eye	10.52	NA	NA	9.63	10.36	0.41	NA	NA	20.56	21.29	090
65855		A	Laser surgery of eye	4.30	5.15	5.49	3.86	3.71	0.17	9.62	9.96	8.33	8.18	090
65860		A	Incise inner eye adhesions	3.55	3.80	3.91	3.01	2.79	0.14	7.49	7.60	6.70	6.48	090
65865		A	Incise inner eye adhesions	5.60	NA	NA	6.26	6.37	0.22	NA	NA	12.08	12.19	090
65870		A	Incise inner eye adhesions	6.27	NA	NA	6.61	6.55	0.24	NA	NA	13.12	13.06	090
65875		A	Incise inner eye adhesions	6.54	NA	NA	6.73	6.75	0.25	NA	NA	13.52	13.54	090
65880		A	Incise inner eye adhesions	7.09	NA	NA	6.97	7.09	0.28	NA	NA	14.34	14.46	090
65900		A	Remove eye lesion	10.93	NA	NA	12.07	11.20	0.46	NA	NA	23.46	22.59	090
65920		A	Remove implant from eye	8.40	NA	NA	7.65	8.01	0.33	NA	NA	16.38	16.74	090
65930		A	Remove blood clot from eye	7.44	NA	NA	8.08	8.14	0.29	NA	NA	15.81	15.87	090
66020		A	Injection treatment of eye	1.59	2.28	2.19	1.49	1.59	0.07	3.94	3.85	3.15	3.25	010
66030		A	Injection treatment of eye	1.25	2.12	1.74	1.32	1.07	0.05	3.42	3.04	2.62	2.37	010
66130		A	Remove eye lesion	7.69	6.91	6.62	6.05	5.97	0.31	14.91	14.62	14.05	13.97	090
66150		A	Glaucoma surgery	8.30	NA	NA	10.25	10.17	0.33	NA	NA	18.88	18.80	090
66155		A	Glaucoma surgery	8.29	NA	NA	10.21	10.13	0.32	NA	NA	18.82	18.74	090
66160		A	Glaucoma surgery	10.17	NA	NA	11.16	11.29	0.41	NA	NA	21.74	21.87	090
66165		A	Glaucoma surgery	8.01	NA	NA	10.18	10.03	0.31	NA	NA	18.50	18.35	090
66170		A	Glaucoma surgery	12.16	NA	NA	12.17	12.43	0.48	NA	NA	24.81	25.07	090
66172		A	Incision of eye	15.04	NA	NA	15.09	14.62	0.59	NA	NA	30.72	30.25	090
66180		A	Implant eye shunt	14.55	NA	NA	12.32	13.58	0.57	NA	NA	27.44	28.70	090
66185		A	Revise eye shunt	8.14	NA	NA	8.40	8.73	0.32	NA	NA	16.86	17.19	090
66220		A	Repair eye lesion	7.77	NA	NA	10.01	9.12	0.32	NA	NA	18.10	17.21	090
66225		A	Repair/graft eye lesion	11.05	NA	NA	9.73	10.60	0.44	NA	NA	21.22	22.09	090
66250		A	Follow-up surgery of eye	5.98	7.92	7.73	6.47	6.64	0.23	14.13	13.94	12.68	12.85	090
66500		A	Incision of iris	3.71	NA	NA	4.08	4.17	0.15	NA	NA	7.94	8.03	090
66505		A	Incision of iris	4.08	NA	NA	4.29	4.11	0.17	NA	NA	8.54	8.36	090
66600		A	Remove iris and lesion	8.68	NA	NA	9.28	9.50	0.34	NA	NA	18.30	18.52	090
66605		A	Removal of iris	12.79	NA	NA	12.61	12.68	0.61	NA	NA	26.01	26.08	090
66625		A	Removal of iris	5.13	7.97	7.51	6.99	6.77	0.20	13.30	12.84	12.32	12.10	090
66630		A	Removal of iris	6.16	NA	NA	8.04	7.87	0.24	NA	NA	14.44	14.27	090
66635		A	Removal of iris	6.25	NA	NA	6.59	6.81	0.24	NA	NA	13.08	13.30	090
66680		A	Repair iris & ciliary body	5.44	NA	NA	6.18	6.26	0.21	NA	NA	11.83	11.91	090
66682		A	Repair iris & ciliary body	6.21	NA	NA	8.08	7.91	0.24	NA	NA	14.53	14.36	090
66700		A	Destruction, ciliary body	4.78	7.67	7.18	6.35	6.19	0.19	12.64	12.15	11.32	11.16	090
66710		A	Destruction, ciliary body	4.78	7.64	7.16	6.37	6.21	0.18	12.60	12.12	11.33	11.17	090
66720		A	Destruction, ciliary body	4.78	7.46	7.02	6.32	6.17	0.19	12.43	11.99	11.29	11.14	090
66740		A	Destruction, ciliary body	4.78	NA	NA	5.87	5.83	0.18	NA	NA	10.83	10.79	090
66761		A	Revision of iris	4.07	5.23	5.14	4.12	3.70	0.16	9.46	9.37	8.35	7.93	090
66762		A	Revision of iris	4.58	5.37	5.40	4.30	3.91	0.18	10.13	10.16	9.06	8.67	090

[1] CPT codes and descriptions only are copyright 2000 American Medical Association. All Rights Reserved. Applicable FARS/DFARS Apply.
[2] Copyright 1994 American Dental Association. All rights reserved.
[3] + Indicates RVUs are not used for Medicare payment.
[4] PE RVUs = Practice Expense Relative Value Units.

ADDENDUM B.—RELATIVE VALUE UNITS (RVU'S) AND RELATED INFORMATION—Continued

CPT[1]/ HCPCS[2]	MOD	Status	Description	Physician Work RVUs[3]	Fully Implemented Non-Facility PE RVUs	Year 2001 Transitional Non-Facility PE RVUs	Fully Implemented Facility PE RVUs	Year 2001 Transitional Facility PE RVUs	Mal-Practice RVUs	Fully Implemented Non-Facility Total	Year 2001 Transitional Non-Facility Total	Fully Implemented Facility Total	Year 2001 Transitional Facility Total	Global
66770		A	Removal of inner eye lesion	5.18	5.68	5.81	4.55	4.19	0.20	11.06	11.19	9.93	9.57	090
66820		A	Incision, secondary cataract	3.89	NA	NA	6.97	6.39	0.16	NA	NA	11.02	10.44	090
66821		A	After cataract laser surgery	2.35	3.56	3.37	3.17	3.08	0.10	6.01	5.82	5.62	5.53	090
66825		A	Reposition intraocular lens	8.23	NA	NA	9.04	8.77	0.32	NA	NA	17.59	17.32	090
66830		A	Removal of lens lesion	8.20	NA	NA	6.80	7.18	0.32	NA	NA	15.32	15.70	090
66840		A	Removal of lens material	7.91	NA	NA	6.76	7.43	0.31	NA	NA	14.98	15.65	090
66850		A	Removal of lens material	9.11	NA	NA	7.30	8.19	0.36	NA	NA	16.77	17.66	090
66852		A	Removal of lens material	9.97	NA	NA	7.79	8.82	0.39	NA	NA	18.15	19.18	090
66920		A	Extraction of lens	8.86	NA	NA	7.26	8.09	0.35	NA	NA	16.47	17.30	090
66930		A	Extraction of lens	10.18	NA	NA	8.76	9.42	0.41	NA	NA	19.35	20.01	090
66940		A	Extraction of lens	8.93	NA	NA	8.16	8.79	0.35	NA	NA	17.44	18.07	090
66982		A	Cataract surgery, complex	13.50	NA	NA	9.09	9.09	0.55	NA	NA	23.14	23.14	090
66983		A	Cataract surg w/iol, 1 stage	8.99	NA	NA	5.69	6.95	0.37	NA	NA	15.05	16.31	090
66984		A	Cataract surg w/iol, i stage	10.23	NA	NA	7.60	8.77	0.41	NA	NA	18.24	19.41	090
66985		A	Insert lens prosthesis	8.39	NA	NA	6.75	7.57	0.33	NA	NA	15.47	16.29	090
66986		A	Exchange lens prosthesis	12.28	NA	NA	8.89	9.98	0.49	NA	NA	21.66	22.75	090
66999		C	Eye surgery procedure	0.00	0.00	0.00	0.00	0.00	0.00	0.00	0.00	0.00	0.00	YYY
67005		A	Partial removal of eye fluid	5.70	NA	NA	2.80	3.80	0.22	NA	NA	8.72	9.72	090
67010		A	Partial removal of eye fluid	6.87	NA	NA	3.41	4.61	0.27	NA	NA	10.55	11.75	090
67015		A	Release of eye fluid	6.92	NA	NA	7.78	7.59	0.27	NA	NA	14.97	14.78	090
67025		A	Replace eye fluid	6.84	14.70	12.86	7.25	7.27	0.27	21.81	19.97	14.36	14.38	090
67027		A	Implant eye drug system	10.85	16.42	14.77	8.56	8.87	0.46	27.73	26.08	19.87	20.18	090
67028		A	Injection eye drug	2.52	8.04	6.90	1.24	1.68	0.11	10.67	9.53	3.87	4.31	000
67030		A	Incise inner eye strands	4.84	NA	NA	6.32	6.18	0.19	NA	NA	11.35	11.21	090
67031		A	Laser surgery, eye strands	3.67	3.89	4.01	3.08	2.86	0.15	7.71	7.83	6.90	6.68	090
67036		A	Removal of inner eye fluid	11.89	NA	NA	9.05	10.34	0.47	NA	NA	21.41	22.70	090
67038		A	Strip retinal membrane	21.24	NA	NA	15.54	17.99	0.84	NA	NA	37.62	40.07	090
67039		A	Laser treatment of retina	14.52	NA	NA	12.20	13.48	0.57	NA	NA	27.29	28.57	090
67040		A	Laser treatment of retina	17.23	NA	NA	13.57	15.32	0.68	NA	NA	31.48	33.23	090
67101		A	Repair detached retina	7.53	10.69	10.27	8.67	7.63	0.29	18.51	18.09	16.49	15.45	090
67105		A	Repair detached retina	7.41	7.41	8.04	5.62	5.46	0.29	15.11	15.74	13.32	13.16	090
67107		A	Repair detached retina	14.84	NA	NA	13.10	14.25	0.58	NA	NA	28.52	29.67	090
67108		A	Repair detached retina	20.82	NA	NA	17.42	19.28	0.82	NA	NA	39.06	40.92	090
67110		A	Repair detached retina	8.81	18.19	16.27	10.08	10.19	0.35	27.35	25.43	19.24	19.35	090
67112		A	Rerepair detached retina	16.86	NA	NA	15.43	16.05	0.66	NA	NA	32.95	33.57	090
67115		A	Release encircling material	4.99	NA	NA	6.42	6.31	0.19	NA	NA	11.60	11.49	090
67120		A	Remove eye implant material	5.98	14.09	12.35	6.82	6.90	0.23	20.30	18.56	13.03	13.11	090
67121		A	Remove eye implant material	10.67	NA	NA	11.60	11.26	0.42	NA	NA	22.69	22.35	090
67141		A	Treatment of retina	5.20	7.62	7.27	6.58	5.71	0.20	13.02	12.67	11.98	11.11	090
67145		A	Treatment of retina	5.37	5.21	5.67	4.21	4.04	0.21	10.79	11.25	9.79	9.62	090
67208		A	Treatment of retinal lesion	6.70	8.02	8.02	6.75	6.06	0.26	14.98	14.98	13.71	13.02	090
67210		A	Treatment of retinal lesion	8.82	7.24	7.88	5.87	5.63	0.35	16.41	17.05	15.04	14.80	090
67218		A	Treatment of retinal lesion	13.52	NA	NA	13.04	13.39	0.53	NA	NA	27.09	27.44	090
67220		A	Treatment of choroid lesion	13.13	11.21	11.21	10.05	10.05	0.51	24.85	24.85	23.69	23.69	090
67221		A	Ocular photodynamic ther	4.01	4.40	4.40	2.00	2.00	0.50	8.91	8.91	6.51	6.51	000
67227		A	Treatment of retinal lesion	6.58	8.60	8.42	6.87	7.12	0.26	15.44	15.26	13.71	13.96	090
67228		A	Treatment of retinal lesion	12.74	9.89	9.97	7.47	6.88	0.50	23.13	23.21	20.71	20.12	090
67250		A	Reinforce eye wall	8.66	NA	NA	10.22	9.56	0.36	NA	NA	19.24	18.58	090
67255		A	Reinforce/graft eye wall	8.90	NA	NA	10.31	10.39	0.35	NA	NA	19.56	19.64	090
67299		C	Eye surgery procedure	0.00	0.00	0.00	0.00	0.00	0.00	0.00	0.00	0.00	0.00	YYY
67311		A	Revise eye muscle	6.65	NA	NA	6.37	6.76	0.27	NA	NA	13.29	13.68	090
67312		A	Revise two eye muscles	8.54	NA	NA	7.38	8.08	0.35	NA	NA	16.27	16.97	090
67314		A	Revise eye muscle	7.52	NA	NA	6.86	7.39	0.30	NA	NA	14.68	15.21	090
67316		A	Revise two eye muscles	9.66	NA	NA	7.88	8.70	0.40	NA	NA	17.94	18.76	090
67318		A	Revise eye muscle(s)	7.85	NA	NA	7.31	7.17	0.31	NA	NA	15.47	15.33	090
67320		A	Revise eye muscle(s) add-on	4.33	NA	NA	6.87	7.74	0.17	NA	NA	11.37	12.24	ZZZ
67331		A	Eye surgery follow-up add-on	4.06	NA	NA	5.26	6.37	0.17	NA	NA	9.49	10.60	ZZZ
67332		A	Rerevise eye muscles add-on	4.49	NA	NA	5.93	7.13	0.18	NA	NA	10.60	11.80	ZZZ
67334		A	Revise eye muscle w/suture	3.98	NA	NA	5.43	5.78	0.16	NA	NA	9.57	9.92	ZZZ
67335		A	Eye suture during surgery	2.49	NA	NA	1.22	1.66	0.10	NA	NA	3.81	4.25	ZZZ
67340		A	Revise eye muscle add-on	4.93	NA	NA	7.20	7.54	0.19	NA	NA	12.32	12.66	ZZZ
67343		A	Release eye tissue	7.35	NA	NA	7.25	7.02	0.30	NA	NA	14.90	14.67	090
67345		A	Destroy nerve of eye muscle	2.96	4.22	3.77	1.43	1.38	0.13	7.31	6.86	4.52	4.47	010
67350		A	Biopsy eye muscle	2.87	NA	NA	2.46	2.49	0.13	NA	NA	5.46	5.49	000
67399		C	Eye muscle surgery procedure	0.00	0.00	0.00	0.00	0.00	0.00	0.00	0.00	0.00	0.00	YYY
67400		A	Explore/biopsy eye socket	9.76	NA	NA	11.86	11.81	0.43	NA	NA	22.05	22.00	090
67405		A	Explore/drain eye socket	7.93	NA	NA	10.65	10.35	0.36	NA	NA	18.94	18.64	090
67412		A	Explore/treat eye socket	9.50	NA	NA	13.04	12.62	0.41	NA	NA	22.95	22.53	090
67413		A	Explore/treat eye socket	10.00	NA	NA	11.47	10.80	0.43	NA	NA	21.90	21.23	090
67414		A	Explr/decompress eye socket	11.13	NA	NA	13.69	12.55	0.48	NA	NA	25.30	24.16	090
67415		A	Aspiration, orbital contents	1.76	NA	NA	0.85	1.17	0.09	NA	NA	2.70	3.02	000
67420		A	Explore/treat eye socket	20.06	NA	NA	17.54	17.71	0.84	NA	NA	38.44	38.61	090
67430		A	Explore/treat eye socket	13.39	NA	NA	18.61	16.85	0.97	NA	NA	32.97	31.21	090
67440		A	Explore/drain eye socket	13.09	NA	NA	14.36	14.68	0.58	NA	NA	28.03	28.35	090
67445		A	Explr/decompress eye socket	14.42	NA	NA	15.68	14.78	0.63	NA	NA	30.73	29.83	090
67450		A	Explore/biopsy eye socket	13.51	NA	NA	14.19	14.68	0.56	NA	NA	28.26	28.75	090
67500		A	Inject/treat eye socket	0.79	2.29	1.92	0.20	0.35	0.04	3.12	2.75	1.03	1.18	000
67505		A	Inject/treat eye socket	0.82	0.92	0.97	0.21	0.28	0.04	1.78	1.83	1.07	1.14	000
67515		A	Inject/treat eye socket	0.61	0.81	0.76	0.30	0.30	0.02	1.44	1.39	0.93	0.93	000
67550		A	Insert eye socket implant	10.19	NA	NA	11.90	11.54	0.50	NA	NA	22.59	22.23	090
67560		A	Revise eye socket implant	10.60	NA	NA	11.57	10.93	0.47	NA	NA	22.64	22.00	090
67570		A	Decompress optic nerve	13.58	NA	NA	14.86	13.20	0.69	NA	NA	29.13	27.47	090
67599		C	Orbit surgery procedure	0.00	0.00	0.00	0.00	0.00	0.00	0.00	0.00	0.00	0.00	YYY

[1] CPT codes and descriptions only are copyright 2000 American Medical Association. All Rights Reserved. Applicable FARS/DFARS Apply.
[2] Copyright 1994 American Dental Association. All rights reserved.
[3] + Indicates RVUs are not used for Medicare payment.
[4] PE RVUs = Practice Expense Relative Value Units.

ADDENDUM B.—RELATIVE VALUE UNITS (RVU'S) AND RELATED INFORMATION—Continued

CPT[1]/ HCPCS[2]	MOD	Status	Description	Physician Work RVUs[3]	Fully Implemented Non-Facility PE RVUs	Year 2001 Transitional Non-Facility PE RVUs	Fully Implemented Facility PE RVUs	Year 2001 Transitional Facility PE RVUs	Mal-Practice RVUs	Fully Implemented Non-Facility Total	Year 2001 Transitional Non-Facility Total	Fully Implemented Facility Total	Year 2001 Transitional Facility Total	Global
67700		A	Drainage of eyelid abscess	1.35	5.31	4.12	0.62	0.53	0.06	6.72	5.53	2.03	1.94	010
67710		A	Incision of eyelid	1.02	5.48	4.39	0.51	0.52	0.04	6.54	5.45	1.57	1.58	010
67715		A	Incision of eyelid fold	1.22	NA	NA	0.61	0.82	0.05	NA	NA	1.88	2.09	010
67800		A	Remove eyelid lesion	1.38	2.26	1.95	0.68	0.64	0.06	3.70	3.39	2.12	2.08	010
67801		A	Remove eyelid lesions	1.88	5.70	4.65	0.93	0.89	0.08	7.66	6.61	2.89	2.85	010
67805		A	Remove eyelid lesions	2.22	5.90	4.80	1.10	1.01	0.09	8.21	7.11	3.41	3.32	010
67808		A	Remove eyelid lesion(s)	3.80	NA	NA	3.86	3.47	0.17	NA	NA	7.83	7.44	090
67810		A	Biopsy of eyelid	1.48	4.41	3.53	0.73	0.66	0.06	5.95	5.07	2.27	2.20	000
67820		A	Revise eyelashes	0.89	1.56	1.27	0.38	0.34	0.04	2.49	2.20	1.31	1.27	000
67825		A	Revise eyelashes	1.38	6.95	5.46	1.68	1.38	0.06	8.39	6.90	3.12	2.82	010
67830		A	Revise eyelashes	1.70	8.17	6.70	1.90	1.93	0.07	9.94	8.47	3.67	3.70	010
67835		A	Revise eyelashes	5.56	NA	NA	4.64	5.14	0.22	NA	NA	10.42	10.92	090
67840		A	Remove eyelid lesion	2.04	5.77	4.66	1.01	0.92	0.08	7.89	6.78	3.13	3.04	010
67850		A	Treat eyelid lesion	1.69	7.01	5.48	1.78	1.45	0.07	8.77	7.24	3.54	3.21	010
67875		A	Closure of eyelid by suture	1.35	8.33	6.72	1.84	1.79	0.06	9.74	8.13	3.25	3.20	000
67880		A	Revision of eyelid	3.80	9.26	8.02	2.96	3.29	0.16	13.22	11.98	6.92	7.25	090
67882		A	Revision of eyelid	5.07	12.04	10.55	4.44	4.85	0.21	17.32	15.83	9.72	10.13	090
67900		A	Repair brow defect	6.14	10.06	8.57	6.31	5.76	0.30	16.50	15.01	12.75	12.20	090
67901		A	Repair eyelid defect	6.97	NA	NA	6.55	6.99	0.32	NA	NA	13.84	14.28	090
67902		A	Repair eyelid defect	7.03	NA	NA	6.64	7.08	0.34	NA	NA	14.01	14.45	090
67903		A	Repair eyelid defect	6.37	11.55	10.57	7.12	7.24	0.39	18.31	17.33	13.88	14.00	090
67904		A	Repair eyelid defect	6.26	12.65	11.36	7.45	7.46	0.26	19.17	17.88	13.97	13.98	090
67906		A	Repair eyelid defect	6.79	7.32	6.97	6.35	6.25	0.42	14.53	14.18	13.56	13.46	090
67908		A	Repair eyelid defect	5.13	8.40	7.83	5.93	5.98	0.20	13.73	13.16	11.26	11.31	090
67909		A	Revise eyelid defect	5.40	9.39	8.66	6.51	6.50	0.25	15.04	14.31	12.16	12.15	090
67911		A	Revise eyelid defect	5.27	NA	NA	6.37	6.35	0.23	NA	NA	11.87	11.85	090
67914		A	Repair eyelid defect	3.68	9.75	8.41	3.36	3.62	0.16	13.59	12.25	7.20	7.46	090
67915		A	Repair eyelid defect	3.18	8.51	6.72	1.60	1.37	0.13	11.82	10.03	4.91	4.68	090
67916		A	Repair eyelid defect	5.31	13.00	11.34	5.07	5.39	0.22	18.53	16.87	10.60	10.92	090
67917		A	Repair eyelid defect	6.02	9.39	8.84	6.44	6.63	0.25	15.66	15.11	12.71	12.90	090
67921		A	Repair eyelid defect	3.40	9.40	8.07	3.12	3.36	0.14	12.94	11.61	6.66	6.90	090
67922		A	Repair eyelid defect	3.06	8.46	6.67	2.94	2.37	0.13	11.65	9.86	6.13	5.56	090
67923		A	Repair eyelid defect	5.88	12.99	11.50	5.24	5.69	0.24	19.11	17.62	11.36	11.81	090
67924		A	Repair eyelid defect	5.79	8.77	8.31	5.79	6.07	0.23	14.79	14.33	11.81	12.09	090
67930		A	Repair eyelid wound	3.61	9.24	7.28	2.92	2.36	0.17	13.02	11.06	6.70	6.14	010
67935		A	Repair eyelid wound	6.22	13.75	11.34	5.23	4.95	0.29	20.26	17.85	11.74	11.46	090
67938		A	Remove eyelid foreign body	1.33	6.56	5.06	0.54	0.48	0.06	7.95	6.45	1.93	1.87	010
67950		A	Revision of eyelid	5.82	8.38	8.02	7.07	7.04	0.30	14.50	14.14	13.19	13.16	090
67961		A	Revision of eyelid	5.69	8.77	8.28	5.99	6.19	0.26	14.72	14.23	11.94	12.14	090
67966		A	Revision of eyelid	6.57	8.49	8.33	6.19	6.61	0.33	15.39	15.23	13.09	13.51	090
67971		A	Reconstruction of eyelid	9.79	NA	NA	7.91	8.83	0.42	NA	NA	18.12	19.04	090
67973		A	Reconstruction of eyelid	12.87	NA	NA	10.06	11.22	0.59	NA	NA	23.52	24.68	090
67974		A	Reconstruction of eyelid	12.84	NA	NA	10.00	11.32	0.54	NA	NA	23.38	24.70	090
67975		A	Reconstruction of eyelid	9.13	NA	NA	7.56	6.80	0.38	NA	NA	17.07	16.31	090
67999		C	Revision of eyelid	0.00	0.00	0.00	0.00	0.00	0.00	0.00	0.00	0.00	0.00	YYY
68020		A	Incise/drain eyelid lining	1.37	5.27	4.09	0.68	0.58	0.06	6.70	5.52	2.11	2.01	010
68040		A	Treatment of eyelid lesions	0.85	5.14	3.98	0.42	0.38	0.03	6.02	4.86	1.30	1.26	000
68100		A	Biopsy of eyelid lining	1.35	5.61	4.48	0.66	0.63	0.06	7.02	5.89	2.07	2.04	000
68110		A	Remove eyelid lining lesion	1.77	6.37	5.12	1.39	1.21	0.07	8.21	6.96	3.23	3.05	010
68115		A	Remove eyelid lining lesion	2.36	5.93	4.97	1.16	1.39	0.10	8.39	7.43	3.62	3.85	010
68130		A	Remove eyelid lining lesion	4.93	NA	NA	2.44	2.94	0.19	NA	NA	7.56	8.06	090
68135		A	Remove eyelid lining lesion	1.84	5.67	4.45	0.91	0.78	0.07	7.58	6.36	2.82	2.69	010
68200		A	Treat eyelid by injection	0.49	5.23	4.06	0.24	0.25	0.02	5.74	4.57	0.75	0.76	000
68320		A	Revise/graft eyelid lining	5.37	5.30	5.58	5.30	5.58	0.21	10.88	11.16	10.88	11.16	090
68325		A	Revise/graft eyelid lining	7.36	NA	NA	6.42	7.01	0.30	NA	NA	14.08	14.67	090
68326		A	Revise/graft eyelid lining	7.15	NA	NA	6.32	6.88	0.30	NA	NA	13.77	14.33	090
68328		A	Revise/graft eyelid lining	8.18	NA	NA	7.06	7.74	0.40	NA	NA	15.64	16.32	090
68330		A	Revise eyelid lining	4.83	6.79	6.53	5.10	5.27	0.19	11.81	11.55	10.12	10.29	090
68335		A	Revise/graft eyelid lining	7.19	NA	NA	5.29	6.11	0.29	NA	NA	12.77	13.59	090
68340		A	Separate eyelid adhesions	4.17	11.81	9.71	3.96	3.82	0.17	16.15	14.05	8.30	8.16	090
68360		A	Revise eyelid lining	4.37	6.09	5.87	4.87	4.96	0.17	10.63	10.41	9.41	9.50	090
68362		A	Revise eyelid lining	7.34	NA	NA	7.58	7.86	0.29	NA	NA	15.21	15.49	090
68399		C	Eyelid lining surgery	0.00	0.00	0.00	0.00	0.00	0.00	0.00	0.00	0.00	0.00	YYY
68400		A	Incise/drain tear gland	1.69	8.26	6.47	1.89	1.56	0.07	10.02	8.23	3.65	3.32	010
68420		A	Incise/drain tear sac	2.30	8.41	6.59	2.20	1.79	0.10	10.81	8.99	4.60	4.19	010
68440		A	Incise tear duct opening	0.94	5.27	4.16	0.47	0.46	0.04	6.25	5.14	1.45	1.44	010
68500		A	Removal of tear gland	11.02	NA	NA	10.08	9.63	0.60	NA	NA	21.70	21.25	090
68505		A	Partial removal, tear gland	10.94	NA	NA	10.35	10.12	0.57	NA	NA	21.86	21.63	090
68510		A	Biopsy of tear gland	4.61	9.91	8.43	2.24	2.68	0.19	14.71	13.23	7.04	7.48	000
68520		A	Removal of tear sac	7.51	NA	NA	6.82	7.36	0.33	NA	NA	14.66	15.20	090
68525		A	Biopsy of tear sac	4.43	NA	NA	2.20	2.65	0.18	NA	NA	6.81	7.26	000
68530		A	Clearance of tear duct	3.66	11.04	9.05	2.83	2.51	0.16	14.86	12.87	6.65	6.33	010
68540		A	Remove tear gland lesion	10.60	NA	NA	8.50	8.63	0.46	NA	NA	19.56	19.69	090
68550		A	Remove tear gland lesion	13.26	NA	NA	10.41	10.89	0.66	NA	NA	24.33	24.81	090
68700		A	Repair tear ducts	6.60	NA	NA	6.21	5.39	0.27	NA	NA	13.08	12.26	090
68705		A	Revise tear duct opening	2.06	5.92	4.72	1.02	0.91	0.08	8.06	6.86	3.16	3.05	010
68720		A	Create tear sac drain	8.96	NA	NA	7.37	8.20	0.38	NA	NA	16.71	17.54	090
68745		A	Create tear duct drain	8.63	NA	NA	7.32	7.27	0.38	NA	NA	16.33	16.28	090
68750		A	Create tear duct drain	8.66	NA	NA	7.79	8.43	0.37	NA	NA	16.82	17.46	090
68760		A	Close tear duct opening	1.73	5.54	4.41	0.85	0.76	0.07	7.34	6.21	2.65	2.56	010
68761		A	Close tear duct opening	1.36	6.29	4.97	0.65	0.61	0.06	7.71	6.39	2.07	2.03	010
68770		A	Close tear system fistula	7.02	13.61	11.36	5.67	4.83	0.28	20.91	18.66	12.97	12.13	090
68801		A	Dilate tear duct opening	0.94	6.39	4.91	0.45	0.40	0.04	7.37	5.89	1.43	1.38	010

[1] CPT codes and descriptions only are copyright 2000 American Medical Association. All Rights Reserved. Applicable FARS/DFARS Apply.
[2] Copyright 1994 American Dental Association. All rights reserved.
[3] + Indicates RVUs are not used for Medicare payment.
[4] PE RVUs = Practice Expense Relative Value Units.

ADDENDUM B.—RELATIVE VALUE UNITS (RVU'S) AND RELATED INFORMATION—Continued

CPT[1]/ HCPCS[2]	MOD	Status	Description	Physician Work RVUs[3]	Fully Implemented Non-Facility PE RVUs	Year 2001 Transitional Non-Facility PE RVUs	Fully Implemented Facility PE RVUs	Year 2001 Transitional Facility PE RVUs	Mal-Practice RVUs	Fully Implemented Non-Facility Total	Year 2001 Transitional Non-Facility Total	Fully Implemented Facility Total	Year 2001 Transitional Facility Total	Global
68810		A	Probe nasolacrimal duct	1.90	8.09	6.22	1.92	1.52	0.08	10.07	8.20	3.90	3.50	010
68811		A	Probe nasolacrimal duct	2.35	NA	NA	2.18	2.04	0.10	NA	NA	4.63	4.49	010
68815		A	Probe nasolacrimal duct	3.20	9.94	7.98	2.66	2.26	0.14	13.28	11.32	6.00	5.60	010
68840		A	Explore/irrigate tear ducts	1.25	7.01	5.39	0.61	0.53	0.05	8.31	6.69	1.91	1.83	010
68850		A	Injection for tear sac x-ray	0.80	12.26	9.33	0.32	0.38	0.03	13.09	10.16	1.15	1.21	000
68899		C	Tear duct system surgery	0.00	0.00	0.00	0.00	0.00	0.00	0.00	0.00	0.00	0.00	YYY
69000		A	Drain external ear lesion	1.45	2.04	1.63	0.58	0.48	0.10	3.59	3.18	2.13	2.03	010
69005		A	Drain external ear lesion	2.11	2.46	2.16	2.06	1.70	0.16	4.73	4.43	4.33	3.97	010
69020		A	Drain outer ear canal lesion	1.48	2.14	1.73	0.74	0.62	0.11	3.73	3.32	2.33	2.21	010
69090		N	Pierce earlobes	0.00	0.00	0.00	0.00	0.00	0.00	0.00	0.00	0.00	0.00	XXX
69100		A	Biopsy of external ear	0.81	1.48	1.29	0.41	0.40	0.04	2.33	2.14	1.26	1.25	000
69105		A	Biopsy of external ear canal	0.85	1.46	1.31	0.97	0.84	0.06	2.37	2.22	1.88	1.75	000
69110		A	Remove external ear, partial	3.44	3.44	3.29	2.77	2.79	0.24	7.12	6.97	6.45	6.47	090
69120		A	Removal of external ear	4.05	NA	NA	4.38	3.50	0.31	NA	NA	8.74	7.86	090
69140		A	Remove ear canal lesion(s)	7.97	NA	NA	7.92	8.11	0.56	NA	NA	16.45	16.64	090
69145		A	Remove ear canal lesion(s)	2.62	3.27	3.13	2.45	2.52	0.18	6.07	5.93	5.25	5.32	090
69150		A	Extensive ear canal surgery	13.43	NA	NA	11.09	11.16	1.07	NA	NA	25.59	25.66	090
69155		A	Extensive ear/neck surgery	20.80	NA	NA	15.15	15.68	1.51	NA	NA	37.46	37.99	090
69200		A	Clear outer ear canal	0.77	1.39	1.16	0.73	0.61	0.05	2.21	1.98	1.55	1.43	000
69205		A	Clear outer ear canal	1.20	NA	NA	1.52	1.43	0.09	NA	NA	2.81	2.72	010
69210		A	Remove impacted ear wax	0.61	1.26	1.01	0.24	0.21	0.04	1.91	1.66	0.89	0.86	000
69220		A	Clean out mastoid cavity	0.83	1.46	1.23	0.42	0.38	0.06	2.35	2.12	1.31	1.27	000
69222		A	Clean out mastoid cavity	1.40	2.14	1.81	1.65	1.34	0.10	3.64	3.31	3.15	2.84	010
69300		R	Revise external ear	6.36	NA	NA	4.35	4.70	0.43	NA	NA	11.14	11.49	YYY
69310		A	Rebuild outer ear canal	10.79	NA	NA	9.46	9.77	0.77	NA	NA	21.02	21.33	090
69320		A	Rebuild outer ear canal	16.96	NA	NA	13.64	14.21	1.17	NA	NA	31.77	32.34	090
69399		C	Outer ear surgery procedure	0.00	0.00	0.00	0.00	0.00	0.00	0.00	0.00	0.00	0.00	YYY
69400		A	Inflate middle ear canal	0.83	1.45	1.21	0.45	0.40	0.06	2.34	2.10	1.34	1.29	000
69401		A	Inflate middle ear canal	0.63	1.35	1.08	0.36	0.31	0.04	2.02	1.75	1.03	0.98	000
69405		A	Catheterize middle ear canal	2.63	2.98	2.37	1.47	1.17	0.18	5.79	5.18	4.28	3.98	010
69410		A	Inset middle ear (baffle)	0.33	1.39	1.21	0.16	0.20	0.02	1.74	1.56	0.51	0.55	000
69420		A	Incision of eardrum	1.33	2.24	1.87	0.71	0.63	0.10	3.67	3.30	2.14	2.06	010
69421		A	Incision of eardrum	1.73	2.50	2.19	1.85	1.70	0.13	4.36	4.05	3.71	3.56	010
69424		A	Remove ventilating tube	0.85	1.60	1.36	0.89	0.75	0.06	2.51	2.27	1.80	1.66	000
69433		A	Create eardrum opening	1.52	2.22	2.03	0.85	0.82	0.11	3.85	3.66	2.48	2.45	010
69436		A	Create eardrum opening	1.96	NA	NA	1.98	2.06	0.14	NA	NA	4.08	4.16	010
69440		A	Exploration of middle ear	7.57	NA	NA	7.12	7.60	0.53	NA	NA	15.22	15.70	090
69450		A	Eardrum revision	5.57	NA	NA	5.93	6.11	0.39	NA	NA	11.89	12.07	090
69501		A	Mastoidectomy	9.07	NA	NA	7.90	8.63	0.65	NA	NA	17.62	18.35	090
69502		A	Mastoidectomy	12.38	NA	NA	10.47	11.48	0.86	NA	NA	23.71	24.72	090
69505		A	Remove mastoid structures	12.99	NA	NA	10.64	11.86	0.92	NA	NA	24.55	25.77	090
69511		A	Extensive mastoid surgery	13.52	NA	NA	11.02	12.30	0.96	NA	NA	25.50	26.78	090
69530		A	Extensive mastoid surgery	19.19	NA	NA	14.59	15.48	1.32	NA	NA	35.10	35.99	090
69535		A	Remove part of temporal bone	36.14	NA	NA	24.08	24.92	2.59	NA	NA	62.81	63.65	090
69540		A	Remove ear lesion	1.20	2.15	1.96	1.54	1.33	0.09	3.44	3.25	2.83	2.62	010
69550		A	Remove ear lesion	10.99	NA	NA	9.68	10.54	0.80	NA	NA	21.47	22.33	090
69552		A	Remove ear lesion	19.46	NA	NA	14.24	15.22	1.36	NA	NA	35.06	36.04	090
69554		A	Remove ear lesion	33.16	NA	NA	21.65	22.44	2.32	NA	NA	57.13	57.92	090
69601		A	Mastoid surgery revision	13.24	NA	NA	11.61	12.51	0.92	NA	NA	25.77	26.67	090
69602		A	Mastoid surgery revision	13.58	NA	NA	11.16	12.42	0.94	NA	NA	25.68	26.94	090
69603		A	Mastoid surgery revision	14.02	NA	NA	11.44	12.76	1.00	NA	NA	26.46	27.78	090
69604		A	Mastoid surgery revision	14.02	NA	NA	11.24	12.61	0.98	NA	NA	26.24	27.61	090
69605		A	Mastoid surgery revision	18.49	NA	NA	13.92	14.50	1.29	NA	NA	33.70	34.28	090
69610		A	Repair of eardrum	4.43	4.09	3.32	3.37	2.66	0.31	8.83	8.06	8.11	7.40	010
69620		A	Repair of eardrum	5.89	6.64	6.74	2.91	3.94	0.40	12.93	13.03	9.20	10.23	090
69631		A	Repair eardrum structures	9.86	NA	NA	9.05	9.73	0.69	NA	NA	19.60	20.28	090
69632		A	Rebuild eardrum structures	12.75	NA	NA	11.28	12.27	0.89	NA	NA	24.92	25.91	090
69633		A	Rebuild eardrum structures	12.10	NA	NA	10.92	11.80	0.84	NA	NA	23.86	24.74	090
69635		A	Repair eardrum structures	13.33	NA	NA	9.40	11.03	0.87	NA	NA	23.60	25.23	090
69636		A	Rebuild eardrum structures	15.22	NA	NA	12.78	14.13	1.07	NA	NA	29.07	30.42	090
69637		A	Rebuild eardrum structures	15.11	NA	NA	12.72	14.05	1.06	NA	NA	28.89	30.22	090
69641		A	Revise middle ear & mastoid	12.71	NA	NA	10.62	11.76	0.89	NA	NA	24.22	25.36	090
69642		A	Revise middle ear & mastoid	16.84	NA	NA	13.63	15.25	1.18	NA	NA	31.65	33.27	090
69643		A	Revise middle ear & mastoid	15.32	NA	NA	12.77	14.15	1.08	NA	NA	29.17	30.55	090
69644		A	Revise middle ear & mastoid	16.97	NA	NA	13.71	15.35	1.19	NA	NA	31.87	33.51	090
69645		A	Revise middle ear & mastoid	16.38	NA	NA	13.34	14.90	1.16	NA	NA	30.88	32.44	090
69646		A	Revise middle ear & mastoid	17.99	NA	NA	14.29	16.09	1.26	NA	NA	33.54	35.34	090
69650		A	Release middle ear bone	9.66	NA	NA	8.28	9.10	0.68	NA	NA	18.62	19.44	090
69660		A	Revise middle ear bone	11.90	NA	NA	9.51	10.69	0.84	NA	NA	22.25	23.43	090
69661		A	Revise middle ear bone	15.74	NA	NA	12.28	13.91	1.10	NA	NA	29.12	30.75	090
69662		A	Revise middle ear bone	15.44	NA	NA	12.14	13.71	1.08	NA	NA	28.66	30.23	090
69666		A	Repair middle ear structures	9.75	NA	NA	8.33	9.16	0.68	NA	NA	18.76	19.59	090
69667		A	Repair middle ear structures	9.76	NA	NA	8.28	9.13	0.72	NA	NA	18.76	19.61	090
69670		A	Remove mastoid air cells	11.51	NA	NA	9.93	10.21	0.78	NA	NA	22.22	22.50	090
69676		A	Remove middle ear nerve	9.52	NA	NA	8.64	8.80	0.69	NA	NA	18.85	19.01	090
69700		A	Close mastoid fistula	8.23	NA	NA	5.24	6.06	0.55	NA	NA	14.02	14.84	090
69710		N	Implant/replace hearing aid	0.00	0.00	0.00	0.00	0.00	0.00	0.00	0.00	0.00	0.00	XXX
69711		A	Remove/repair hearing aid	10.44	NA	NA	9.42	9.36	0.62	NA	NA	20.48	20.42	090
69714		A	Implant temple bone w/stimul	14.00	NA	NA	8.71	8.71	0.97	NA	NA	23.68	23.68	090
69715		A	Temple bne implnt w/stimulat	18.25	NA	NA	10.49	10.49	1.25	NA	NA	29.99	29.99	090
69717		A	Temple bone implant revision	14.98	NA	NA	8.37	8.37	1.04	NA	NA	24.39	24.39	090
69718		A	Revise temple bone implant	18.50	NA	NA	10.58	10.58	1.27	NA	NA	30.35	30.35	090
69720		A	Release facial nerve	14.38	NA	NA	12.04	13.32	1.03	NA	NA	27.45	28.73	090

[1] CPT codes and descriptions only are copyright 2000 American Medical Association. All Rights Reserved. Applicable FARS/DFARS Apply.
[2] Copyright 1994 American Dental Association. All rights reserved.
[3] + Indicates RVUs are not used for Medicare payment.
[4] PE RVUs = Practice Expense Relative Value Units.

ADDENDUM B.—RELATIVE VALUE UNITS (RVU'S) AND RELATED INFORMATION—Continued

CPT[1]/ HCPCS[2]	MOD	Status	Description	Physician Work RVUs[3]	Fully Implemented Non-Facility PE RVUs	Year 2001 Transitional Non-Facility PE RVUs	Fully Implemented Facility PE RVUs	Year 2001 Transitional Facility PE RVUs	Mal-Practice RVUs	Fully Implemented Non-Facility Total	Year 2001 Transitional Non-Facility Total	Fully Implemented Facility Total	Year 2001 Transitional Facility Total	Global
69725		A	Release facial nerve	25.38	NA	NA	18.07	17.53	1.78	NA	NA	45.23	44.69	090
69740		A	Repair facial nerve	15.96	NA	NA	11.48	11.82	1.13	NA	NA	28.57	28.91	090
69745		A	Repair facial nerve	16.69	NA	NA	12.11	13.41	1.00	NA	NA	29.80	31.10	090
69799		C	Middle ear surgery procedure	0.00	0.00	0.00	0.00	0.00	0.00	0.00	0.00	0.00	0.00	YYY
69801		A	Incise inner ear	8.56	NA	NA	7.68	8.32	0.60	NA	NA	16.84	17.48	090
69802		A	Incise inner ear	13.10	NA	NA	10.95	11.26	0.91	NA	NA	24.96	25.27	090
69805		A	Explore inner ear	13.82	NA	NA	10.69	11.58	0.97	NA	NA	25.48	26.37	090
69806		A	Explore inner ear	12.35	NA	NA	10.49	11.56	0.86	NA	NA	23.70	24.77	090
69820		A	Establish inner ear window	10.34	NA	NA	9.08	9.21	0.66	NA	NA	20.08	20.21	090
69840		A	Revise inner ear window	10.26	NA	NA	10.00	9.80	0.64	NA	NA	20.90	20.70	090
69905		A	Remove inner ear	11.10	NA	NA	9.33	10.31	0.77	NA	NA	21.20	22.18	090
69910		A	Remove inner ear & mastoid	13.63	NA	NA	10.96	12.29	0.94	NA	NA	25.53	26.86	090
69915		A	Incise inner ear nerve	21.23	NA	NA	15.22	16.22	1.54	NA	NA	37.99	38.99	090
69930		A	Implant cochlear device	16.81	NA	NA	12.44	14.35	1.19	NA	NA	30.44	32.35	090
69949		C	Inner ear surgery procedure	0.00	0.00	0.00	0.00	0.00	0.00	0.00	0.00	0.00	0.00	YYY
69950		A	Incise inner ear nerve	25.64	NA	NA	16.01	16.89	2.90	NA	NA	44.55	45.43	090
69955		A	Release facial nerve	27.04	NA	NA	18.34	19.26	1.89	NA	NA	47.27	48.19	090
69960		A	Release inner ear canal	27.04	NA	NA	17.85	18.23	2.43	NA	NA	47.32	47.70	090
69970		A	Remove inner ear lesion	30.04	NA	NA	19.00	19.59	2.34	NA	NA	51.38	51.97	090
69979		C	Temporal bone surgery	0.00	0.00	0.00	0.00	0.00	0.00	0.00	0.00	0.00	0.00	YYY
69990		R	Microsurgery add-on	3.47	NA	NA	1.86	1.86	0.56	NA	NA	5.89	5.89	ZZZ
70010		A	Contrast x-ray of brain	1.19	4.73	4.81	4.73	4.81	0.24	6.16	6.24	6.16	6.24	XXX
70010	26	A	Contrast x-ray of brain	1.19	0.43	0.46	0.43	0.46	0.06	1.68	1.71	1.68	1.71	XXX
70010	TC	A	Contrast x-ray of brain	0.00	4.30	4.35	NA	NA	0.18	4.48	4.53	NA	NA	XXX
70015		A	Contrast x-ray of brain	1.19	1.79	1.83	1.79	1.83	0.12	3.10	3.14	3.10	3.14	XXX
70015	26	A	Contrast x-ray of brain	1.19	0.44	0.47	0.44	0.47	0.05	1.68	1.71	1.68	1.71	XXX
70015	TC	A	Contrast x-ray of brain	0.00	1.35	1.36	NA	NA	0.07	1.42	1.43	NA	NA	XXX
70030		A	X-ray eye for foreign body	0.17	0.47	0.49	0.47	0.49	0.03	0.67	0.69	0.67	0.69	XXX
70030	26	A	X-ray eye for foreign body	0.17	0.06	0.07	0.06	0.07	0.01	0.24	0.25	0.24	0.25	XXX
70030	TC	A	X-ray eye for foreign body	0.00	0.41	0.42	NA	NA	0.02	0.43	0.44	NA	NA	XXX
70100		A	X-ray exam of jaw	0.18	0.58	0.60	0.58	0.60	0.03	0.79	0.81	0.79	0.81	XXX
70100	26	A	X-ray exam of jaw	0.18	0.06	0.07	0.06	0.07	0.01	0.25	0.26	0.25	0.26	XXX
70100	TC	A	X-ray exam of jaw	0.00	0.52	0.53	NA	NA	0.02	0.54	0.55	NA	NA	XXX
70110		A	X-ray exam of jaw	0.25	0.70	0.72	0.70	0.72	0.04	0.99	1.01	0.99	1.01	XXX
70110	26	A	X-ray exam of jaw	0.25	0.09	0.10	0.09	0.10	0.01	0.35	0.36	0.35	0.36	XXX
70110	TC	A	X-ray exam of jaw	0.00	0.61	0.62	NA	NA	0.03	0.64	0.65	NA	NA	XXX
70120		A	X-ray exam of mastoids	0.18	0.67	0.69	0.67	0.69	0.04	0.89	0.91	0.89	0.91	XXX
70120	26	A	X-ray exam of mastoids	0.18	0.06	0.07	0.06	0.07	0.01	0.25	0.26	0.25	0.26	XXX
70120	TC	A	X-ray exam of mastoids	0.00	0.61	0.62	NA	NA	0.03	0.64	0.65	NA	NA	XXX
70130		A	X-ray exam of mastoids	0.34	0.90	0.92	0.90	0.92	0.05	1.29	1.31	1.29	1.31	XXX
70130	26	A	X-ray exam of mastoids	0.34	0.12	0.13	0.12	0.13	0.01	0.47	0.48	0.47	0.48	XXX
70130	TC	A	X-ray exam of mastoids	0.00	0.78	0.79	NA	NA	0.04	0.82	0.83	NA	NA	XXX
70134		A	X-ray exam of middle ear	0.34	0.85	0.87	0.85	0.87	0.05	1.24	1.26	1.24	1.26	XXX
70134	26	A	X-ray exam of middle ear	0.34	0.12	0.13	0.12	0.13	0.01	0.47	0.48	0.47	0.48	XXX
70134	TC	A	X-ray exam of middle ear	0.00	0.73	0.74	NA	NA	0.04	0.77	0.78	NA	NA	XXX
70140		A	X-ray exam of facial bones	0.19	0.68	0.70	0.68	0.70	0.04	0.91	0.93	0.91	0.93	XXX
70140	26	A	X-ray exam of facial bones	0.19	0.07	0.08	0.07	0.08	0.01	0.27	0.28	0.27	0.28	XXX
70140	TC	A	X-ray exam of facial bones	0.00	0.61	0.62	NA	NA	0.03	0.64	0.65	NA	NA	XXX
70150		A	X-ray exam of facial bones	0.26	0.87	0.89	0.87	0.89	0.05	1.18	1.20	1.18	1.20	XXX
70150	26	A	X-ray exam of facial bones	0.26	0.09	0.10	0.09	0.10	0.01	0.36	0.37	0.36	0.37	XXX
70150	TC	A	X-ray exam of facial bones	0.00	0.78	0.79	NA	NA	0.04	0.82	0.83	NA	NA	XXX
70160		A	X-ray exam of nasal bones	0.17	0.58	0.60	0.58	0.60	0.03	0.78	0.80	0.78	0.80	XXX
70160	26	A	X-ray exam of nasal bones	0.17	0.06	0.07	0.06	0.07	0.01	0.24	0.25	0.24	0.25	XXX
70160	TC	A	X-ray exam of nasal bones	0.00	0.52	0.53	NA	NA	0.02	0.54	0.55	NA	NA	XXX
70170		A	X-ray exam of tear duct	0.30	1.05	1.07	1.05	1.07	0.06	1.41	1.43	1.41	1.43	XXX
70170	26	A	X-ray exam of tear duct	0.30	0.11	0.12	0.11	0.12	0.01	0.42	0.43	0.42	0.43	XXX
70170	TC	A	X-ray exam of tear duct	0.00	0.94	0.95	NA	NA	0.05	0.99	1.00	NA	NA	XXX
70190		A	X-ray exam of eye sockets	0.21	0.68	0.70	0.68	0.70	0.04	0.93	0.95	0.93	0.95	XXX
70190	26	A	X-ray exam of eye sockets	0.21	0.07	0.08	0.07	0.08	0.01	0.29	0.30	0.29	0.30	XXX
70190	TC	A	X-ray exam of eye sockets	0.00	0.61	0.62	NA	NA	0.03	0.64	0.65	NA	NA	XXX
70200		A	X-ray exam of eye sockets	0.28	0.88	0.90	0.88	0.90	0.05	1.21	1.23	1.21	1.23	XXX
70200	26	A	X-ray exam of eye sockets	0.28	0.10	0.11	0.10	0.11	0.01	0.39	0.40	0.39	0.40	XXX
70200	TC	A	X-ray exam of eye sockets	0.00	0.78	0.79	NA	NA	0.04	0.82	0.83	NA	NA	XXX
70210		A	X-ray exam of sinuses	0.17	0.67	0.69	0.67	0.69	0.04	0.88	0.90	0.88	0.90	XXX
70210	26	A	X-ray exam of sinuses	0.17	0.06	0.07	0.06	0.07	0.01	0.24	0.25	0.24	0.25	XXX
70210	TC	A	X-ray exam of sinuses	0.00	0.61	0.62	NA	NA	0.03	0.64	0.65	NA	NA	XXX
70220		A	X-ray exam of sinuses	0.25	0.87	0.89	0.87	0.89	0.05	1.17	1.19	1.17	1.19	XXX
70220	26	A	X-ray exam of sinuses	0.25	0.09	0.10	0.09	0.10	0.01	0.35	0.36	0.35	0.36	XXX
70220	TC	A	X-ray exam of sinuses	0.00	0.78	0.79	NA	NA	0.04	0.82	0.83	NA	NA	XXX
70240		A	X-ray exam, pituitary saddle	0.19	0.48	0.50	0.48	0.50	0.03	0.70	0.72	0.70	0.72	XXX
70240	26	A	X-ray exam, pituitary saddle	0.19	0.07	0.08	0.07	0.08	0.01	0.27	0.28	0.27	0.28	XXX
70240	TC	A	X-ray exam, pituitary saddle	0.00	0.41	0.42	NA	NA	0.02	0.43	0.44	NA	NA	XXX
70250		A	X-ray exam of skull	0.24	0.70	0.72	0.70	0.72	0.04	0.98	1.00	0.98	1.00	XXX
70250	26	A	X-ray exam of skull	0.24	0.09	0.10	0.09	0.10	0.01	0.34	0.35	0.34	0.35	XXX
70250	TC	A	X-ray exam of skull	0.00	0.61	0.62	NA	NA	0.03	0.64	0.65	NA	NA	XXX
70260		A	X-ray exam of skull	0.34	1.00	1.02	1.00	1.02	0.06	1.40	1.42	1.40	1.42	XXX
70260	26	A	X-ray exam of skull	0.34	0.12	0.13	0.12	0.13	0.01	0.47	0.48	0.47	0.48	XXX
70260	TC	A	X-ray exam of skull	0.00	0.88	0.89	NA	NA	0.05	0.93	0.94	NA	NA	XXX
70300		A	X-ray exam of teeth	0.10	0.30	0.30	0.30	0.30	0.03	0.43	0.43	0.43	0.43	XXX
70300	26	A	X-ray exam of teeth	0.10	0.04	0.04	0.04	0.04	0.01	0.15	0.15	0.15	0.15	XXX
70300	TC	A	X-ray exam of teeth	0.00	0.26	0.26	NA	NA	0.02	0.28	0.28	NA	NA	XXX
70310		A	X-ray exam of teeth	0.16	0.47	0.49	0.47	0.49	0.03	0.66	0.68	0.66	0.68	XXX
70310	26	A	X-ray exam of teeth	0.16	0.06	0.07	0.06	0.07	0.01	0.23	0.24	0.23	0.24	XXX

[1] CPT codes and descriptions only are copyright 2000 American Medical Association. All Rights Reserved. Applicable FARS/DFARS Apply.
[2] Copyright 1994 American Dental Association. All rights reserved.
[3] + Indicates RVUs are not used for Medicare payment.
[4] PE RVUs = Practice Expense Relative Value Units.

ADDENDUM B.—RELATIVE VALUE UNITS (RVU'S) AND RELATED INFORMATION—Continued

CPT[1]/ HCPCS[2]	MOD	Status	Description	Physician Work RVUs[3]	Fully Implemented Non-Facility PE RVUs	Year 2001 Transitional Non-Facility PE RVUs	Fully Implemented Facility PE RVUs	Year 2001 Transitional Facility PE RVUs	Mal-Practice RVUs	Fully Implemented Non-Facility Total	Year 2001 Transitional Non-Facility Total	Fully Implemented Facility Total	Year 2001 Transitional Facility Total	Global
70310	TC	A	X-ray exam of teeth	0.00	0.41	0.42	NA	NA	0.02	0.43	0.44	NA	NA	XXX
70320		A	Full mouth x-ray of teeth	0.22	0.86	0.88	0.86	0.88	0.05	1.13	1.15	1.13	1.15	XXX
70320	26	A	Full mouth x-ray of teeth	0.22	0.08	0.09	0.08	0.09	0.01	0.31	0.32	0.31	0.32	XXX
70320	TC	A	Full mouth x-ray of teeth	0.00	0.78	0.79	NA	NA	0.04	0.82	0.83	NA	NA	XXX
70328		A	X-ray exam of jaw joint	0.18	0.55	0.57	0.55	0.57	0.03	0.76	0.78	0.76	0.78	XXX
70328	26	A	X-ray exam of jaw joint	0.18	0.06	0.07	0.06	0.07	0.01	0.25	0.26	0.25	0.26	XXX
70328	TC	A	X-ray exam of jaw joint	0.00	0.49	0.50	NA	NA	0.02	0.51	0.52	NA	NA	XXX
70330		A	X-ray exam of jaw joints	0.24	0.93	0.95	0.93	0.95	0.05	1.22	1.24	1.22	1.24	XXX
70330	26	A	X-ray exam of jaw joints	0.24	0.09	0.10	0.09	0.10	0.01	0.34	0.35	0.34	0.35	XXX
70330	TC	A	X-ray exam of jaw joints	0.00	0.84	0.85	NA	NA	0.04	0.88	0.89	NA	NA	XXX
70332		A	X-ray exam of jaw joint	0.54	2.28	2.32	2.28	2.32	0.12	2.94	2.98	2.94	2.98	XXX
70332	26	A	X-ray exam of jaw joint	0.54	0.20	0.22	0.20	0.22	0.02	0.76	0.78	0.76	0.78	XXX
70332	TC	A	X-ray exam of jaw joint	0.00	2.08	2.10	NA	NA	0.10	2.18	2.20	NA	NA	XXX
70336		A	Magnetic image, jaw joint	1.48	11.66	11.77	11.66	11.77	0.56	13.70	13.81	13.70	13.81	XXX
70336	26	A	Magnetic image, jaw joint	1.48	0.53	0.52	0.53	0.52	0.07	2.08	2.07	2.08	2.07	XXX
70336	TC	A	Magnetic image, jaw joint	0.00	11.13	11.25	NA	NA	0.49	11.62	11.74	NA	NA	XXX
70350		A	X-ray head for orthodontia	0.17	0.43	0.45	0.43	0.45	0.03	0.63	0.65	0.63	0.65	XXX
70350	26	A	X-ray head for orthodontia	0.17	0.06	0.07	0.06	0.07	0.01	0.24	0.25	0.24	0.25	XXX
70350	TC	A	X-ray head for orthodontia	0.00	0.37	0.38	NA	NA	0.02	0.39	0.40	NA	NA	XXX
70355		A	Panoramic x-ray of jaws	0.20	0.64	0.66	0.64	0.66	0.04	0.88	0.90	0.88	0.90	XXX
70355	26	A	Panoramic x-ray of jaws	0.20	0.07	0.08	0.07	0.08	0.01	0.28	0.29	0.28	0.29	XXX
70355	TC	A	Panoramic x-ray of jaws	0.00	0.57	0.58	NA	NA	0.03	0.60	0.61	NA	NA	XXX
70360		A	X-ray exam of neck	0.17	0.47	0.49	0.47	0.49	0.03	0.67	0.69	0.67	0.69	XXX
70360	26	A	X-ray exam of neck	0.17	0.06	0.07	0.06	0.07	0.01	0.24	0.25	0.24	0.25	XXX
70360	TC	A	X-ray exam of neck	0.00	0.41	0.42	NA	NA	0.02	0.43	0.44	NA	NA	XXX
70370		A	Throat x-ray & fluoroscopy	0.32	1.41	1.43	1.41	1.43	0.07	1.80	1.82	1.80	1.82	XXX
70370	26	A	Throat x-ray & fluoroscopy	0.32	0.11	0.12	0.11	0.12	0.01	0.44	0.45	0.44	0.45	XXX
70370	TC	A	Throat x-ray & fluoroscopy	0.00	1.30	1.31	NA	NA	0.06	1.36	1.37	NA	NA	XXX
70371		A	Speech evaluation, complex	0.84	2.38	2.43	2.38	2.43	0.14	3.36	3.41	3.36	3.41	XXX
70371	26	A	Speech evaluation, complex	0.84	0.30	0.33	0.30	0.33	0.04	1.18	1.21	1.18	1.21	XXX
70371	TC	A	Speech evaluation, complex	0.00	2.08	2.10	NA	NA	0.10	2.18	2.20	NA	NA	XXX
70373		A	Contrast x-ray of larynx	0.44	1.93	1.97	1.93	1.97	0.11	2.48	2.52	2.48	2.52	XXX
70373	26	A	Contrast x-ray of larynx	0.44	0.16	0.18	0.16	0.18	0.02	0.62	0.64	0.62	0.64	XXX
70373	TC	A	Contrast x-ray of larynx	0.00	1.77	1.79	NA	NA	0.09	1.86	1.88	NA	NA	XXX
70380		A	X-ray exam of salivary gland	0.17	0.72	0.74	0.72	0.74	0.04	0.93	0.95	0.93	0.95	XXX
70380	26	A	X-ray exam of salivary gland	0.17	0.06	0.07	0.06	0.07	0.01	0.24	0.25	0.24	0.25	XXX
70380	TC	A	X-ray exam of salivary gland	0.00	0.66	0.67	NA	NA	0.03	0.69	0.70	NA	NA	XXX
70390		A	X-ray exam of salivary duct	0.38	1.90	1.93	1.90	1.93	0.11	2.39	2.42	2.39	2.42	XXX
70390	26	A	X-ray exam of salivary duct	0.38	0.13	0.14	0.13	0.14	0.02	0.53	0.54	0.53	0.54	XXX
70390	TC	A	X-ray exam of salivary duct	0.00	1.77	1.79	NA	NA	0.09	1.86	1.88	NA	NA	XXX
70450		A	Ct head/brain w/o dye	0.85	4.99	5.07	4.99	5.07	0.25	6.09	6.17	6.09	6.17	XXX
70450	26	A	Ct head/brain w/o dye	0.85	0.30	0.33	0.30	0.33	0.04	1.19	1.22	1.19	1.22	XXX
70450	TC	A	Ct head/brain w/o dye	0.00	4.69	4.74	NA	NA	0.21	4.90	4.95	NA	NA	XXX
70460		A	Ct head/brain w/dye	1.13	6.01	6.11	6.01	6.11	0.30	7.44	7.54	7.44	7.54	XXX
70460	26	A	Ct head/brain w/dye	1.13	0.40	0.44	0.40	0.44	0.05	1.58	1.62	1.58	1.62	XXX
70460	TC	A	Ct head/brain w/dye	0.00	5.61	5.67	NA	NA	0.25	5.86	5.92	NA	NA	XXX
70470		A	Ct head/brain w/o&w dye	1.27	7.46	7.58	7.46	7.58	0.37	9.10	9.22	9.10	9.22	XXX
70470	26	A	Ct head/brain w/o&w dye	1.27	0.45	0.49	0.45	0.49	0.06	1.78	1.82	1.78	1.82	XXX
70470	TC	A	Ct head/brain w/o&w dye	0.00	7.01	7.09	NA	NA	0.31	7.32	7.40	NA	NA	XXX
70480		A	Ct orbit/ear/fossa w/o dye	1.28	5.14	5.23	5.14	5.23	0.27	6.69	6.78	6.69	6.78	XXX
70480	26	A	Ct orbit/ear/fossa w/o dye	1.28	0.45	0.49	0.45	0.49	0.06	1.79	1.83	1.79	1.83	XXX
70480	TC	A	Ct orbit/ear/fossa w/o dye	0.00	4.69	4.74	NA	NA	0.21	4.90	4.95	NA	NA	XXX
70481		A	Ct orbit/ear/fossa w/dye	1.38	6.10	6.20	6.10	6.20	0.31	7.79	7.89	7.79	7.89	XXX
70481	26	A	Ct orbit/ear/fossa w/dye	1.38	0.49	0.53	0.49	0.53	0.06	1.93	1.97	1.93	1.97	XXX
70481	TC	A	Ct orbit/ear/fossa w/dye	0.00	5.61	5.67	NA	NA	0.25	5.86	5.92	NA	NA	XXX
70482		A	Ct orbit/ear/fossa w/o&w dye	1.45	7.53	7.65	7.53	7.65	0.37	9.35	9.47	9.35	9.47	XXX
70482	26	A	Ct orbit/ear/fossa w/o&w dye	1.45	0.52	0.56	0.52	0.56	0.06	2.03	2.07	2.03	2.07	XXX
70482	TC	A	Ct orbit/ear/fossa w/o&w dye	0.00	7.01	7.09	NA	NA	0.31	7.32	7.40	NA	NA	XXX
70486		A	Ct maxillofacial w/o dye	1.14	5.10	5.18	5.10	5.18	0.26	6.50	6.58	6.50	6.58	XXX
70486	26	A	Ct maxillofacial w/o dye	1.14	0.41	0.44	0.41	0.44	0.05	1.60	1.63	1.60	1.63	XXX
70486	TC	A	Ct maxillofacial w/o dye	0.00	4.69	4.74	NA	NA	0.21	4.90	4.95	NA	NA	XXX
70487		A	Ct maxillofacial w/dye	1.30	6.07	6.17	6.07	6.17	0.31	7.68	7.78	7.68	7.78	XXX
70487	26	A	Ct maxillofacial w/dye	1.30	0.46	0.50	0.46	0.50	0.06	1.82	1.86	1.82	1.86	XXX
70487	TC	A	Ct maxillofacial w/dye	0.00	5.61	5.67	NA	NA	0.25	5.86	5.92	NA	NA	XXX
70488		A	Ct maxillofacial w/o&w dye	1.42	7.51	7.64	7.51	7.64	0.37	9.30	9.43	9.30	9.43	XXX
70488	26	A	Ct maxillofacial w/o&w dye	1.42	0.50	0.55	0.50	0.55	0.06	1.98	2.03	1.98	2.03	XXX
70488	TC	A	Ct maxillofacial w/o&w dye	0.00	7.01	7.09	NA	NA	0.31	7.32	7.40	NA	NA	XXX
70490		A	Ct soft tissue neck w/o dye	1.28	5.14	5.23	5.14	5.23	0.27	6.69	6.78	6.69	6.78	XXX
70490	26	A	Ct soft tissue neck w/o dye	1.28	0.45	0.49	0.45	0.49	0.06	1.79	1.83	1.79	1.83	XXX
70490	TC	A	Ct soft tissue neck w/o dye	0.00	4.69	4.74	NA	NA	0.21	4.90	4.95	NA	NA	XXX
70491		A	Ct soft tissue neck w/dye	1.38	6.10	6.20	6.10	6.20	0.31	7.79	7.89	7.79	7.89	XXX
70491	26	A	Ct soft tissue neck w/dye	1.38	0.49	0.53	0.49	0.53	0.06	1.93	1.97	1.93	1.97	XXX
70491	TC	A	Ct soft tissue neck w/dye	0.00	5.61	5.67	NA	NA	0.25	5.86	5.92	NA	NA	XXX
70492		A	Ct sft tsue nck w/o & w/dye	1.45	7.53	7.65	7.53	7.65	0.37	9.35	9.47	9.35	9.47	XXX
70492	26	A	Ct sft tsue nck w/o & w/dye	1.45	0.52	0.56	0.52	0.56	0.06	2.03	2.07	2.03	2.07	XXX
70492	TC	A	Ct sft tsue nck w/o & w/dye	0.00	7.01	7.09	NA	NA	0.31	7.32	7.40	NA	NA	XXX
70496		A	Ct angiography, head	1.75	7.71	7.71	7.71	7.71	0.54	10.00	10.00	10.00	10.00	XXX
70496	26	A	Ct angiography, head	1.75	0.70	0.70	0.70	0.70	0.06	2.51	2.51	2.51	2.51	XXX
70496	TC	A	Ct angiography, head	0.00	7.01	7.01	NA	NA	0.48	7.49	7.49	NA	NA	XXX
70498		A	Ct angiography, neck	1.75	7.71	7.71	7.71	7.71	0.54	10.00	10.00	10.00	10.00	XXX
70498	26	A	Ct angiography, neck	1.75	0.70	0.70	0.70	0.70	0.06	2.51	2.51	2.51	2.51	XXX
70498	TC	A	Ct angiography, neck	0.00	7.01	7.01	NA	NA	0.48	7.49	7.49	NA	NA	XXX
70540		A	Mri orbit/face/neck w/o dye	0.98	11.48	11.69	11.48	11.69	0.36	12.82	13.03	12.82	13.03	XXX

[1] CPT codes and descriptions only are copyright 2000 American Medical Association. All Rights Reserved. Applicable FARS/DFARS Apply.
[2] Copyright 1994 American Dental Association. All rights reserved.
[3] + Indicates RVUs are not used for Medicare payment.
[4] PE RVUs = Practice Expense Relative Value Units.

ADDENDUM B.—RELATIVE VALUE UNITS (RVU'S) AND RELATED INFORMATION—Continued

CPT[1]/ HCPCS[2]	MOD	Status	Description	Physician Work RVUs[3]	Fully Implemented Non-Facility PE RVUs	Year 2001 Transitional Non-Facility PE RVUs	Fully Implemented Facility PE RVUs	Year 2001 Transitional Facility PE RVUs	Mal-Practice RVUs	Fully Implemented Non-Facility Total	Year 2001 Transitional Non-Facility Total	Fully Implemented Facility Total	Year 2001 Transitional Facility Total	Global
70540	26	A	Mri orbit/face/neck w/o dye	0.98	0.35	0.44	0.35	0.44	0.04	1.37	1.46	1.37	1.46	XXX
70540	TC	A	Mri orbit/face/neck w/o dye	0.00	11.13	11.25	NA	NA	0.32	11.45	11.57	NA	NA	XXX
70541		D	Magnetic image, head (MRA)	0.00	0.00	0.00	0.00	0.00	0.00	0.00	0.00	0.00	0.00	XXX
70541	26	D	Magnetic image, head (MRA)	0.00	0.00	0.00	0.00	0.00	0.00	0.00	0.00	0.00	0.00	XXX
70541	TC	D	Magnetic image, head (MRA)	0.00	0.00	0.00	NA	NA	0.00	0.00	0.00	NA	NA	XXX
70542		A	Mri orbit/face/neck w/dye	1.17	13.76	13.76	13.76	13.76	0.43	15.36	15.36	15.36	15.36	XXX
70542	26	A	Mri orbit/face/neck w/dye	1.17	0.42	0.42	0.42	0.42	0.04	1.63	1.63	1.63	1.63	XXX
70542	TC	A	Mri orbit/face/neck w/dye	0.00	13.34	13.34	NA	NA	0.39	13.73	13.73	NA	NA	XXX
70543		A	Mri orbt/fac/nck w/o&w dye	1.56	25.27	25.27	25.27	25.27	0.78	27.61	27.61	27.61	27.61	XXX
70543	26	A	Mri orbt/fac/nck w/o&w dye	1.56	0.56	0.56	0.56	0.56	0.08	2.20	2.20	2.20	2.20	XXX
70543	TC	A	Mri orbt/fac/nck w/o&w dye	0.00	24.71	24.71	NA	NA	0.70	25.41	25.41	NA	NA	XXX
70544		A	Mr angiography head w/o dye	1.20	11.56	11.56	11.56	11.56	0.56	13.32	13.32	13.32	13.32	XXX
70544	26	A	Mr angiography head w/o dye	1.20	0.43	0.43	0.43	0.43	0.07	1.70	1.70	1.70	1.70	XXX
70544	TC	A	Mr angiography head w/o dye	0.00	11.13	11.13	NA	NA	0.49	11.62	11.62	NA	NA	XXX
70545		A	Mr angiography head w/dye	1.20	11.56	11.56	11.56	11.56	0.56	13.32	13.32	13.32	13.32	XXX
70545	26	A	Mr angiography head w/dye	1.20	0.43	0.43	0.43	0.43	0.07	1.70	1.70	1.70	1.70	XXX
70545	TC	A	Mr angiography head w/dye	0.00	11.13	11.13	NA	NA	0.49	11.62	11.62	NA	NA	XXX
70546		A	Mr angiograph head w/o&w dye	1.80	22.89	22.89	22.89	22.89	0.56	25.25	25.25	25.25	25.25	XXX
70546	26	A	Mr angiograph head w/o&w dye	1.80	0.64	0.64	0.64	0.64	0.07	2.51	2.51	2.51	2.51	XXX
70546	TC	A	Mr angiograph head w/o&w dye	0.00	22.25	22.25	NA	NA	0.49	22.74	22.74	NA	NA	XXX
70547		A	Mr angiography neck w/o dye	1.20	11.56	11.56	11.56	11.56	0.56	13.32	13.32	13.32	13.32	XXX
70547	26	A	Mr angiography neck w/o dye	1.20	0.43	0.43	0.43	0.43	0.07	1.70	1.70	1.70	1.70	XXX
70547	TC	A	Mr angiography neck w/o dye	0.00	11.13	11.13	NA	NA	0.49	11.62	11.62	NA	NA	XXX
70548		A	Mr angiography neck w/dye	1.20	11.56	11.56	11.56	11.56	0.56	13.32	13.32	13.32	13.32	XXX
70548	26	A	Mr angiography neck w/dye	1.20	0.43	0.43	0.43	0.43	0.07	1.70	1.70	1.70	1.70	XXX
70548	TC	A	Mr angiography neck w/dye	0.00	11.13	11.13	NA	NA	0.49	11.62	11.62	NA	NA	XXX
70549		A	Mr angiograph neck w/o&w dye	1.80	22.89	22.89	22.89	22.89	0.56	25.25	25.25	25.25	25.25	XXX
70549	26	A	Mr angiograph neck w/o&w dye	1.80	0.64	0.64	0.64	0.64	0.07	2.51	2.51	2.51	2.51	XXX
70549	TC	A	Mr angiograph neck w/o&w dye	0.00	22.25	22.25	NA	NA	0.49	22.74	22.74	NA	NA	XXX
70551		A	Mri brain w/o dye	1.48	11.66	11.83	11.66	11.83	0.56	13.70	13.87	13.70	13.87	XXX
70551	26	A	Mri brain w/o dye	1.48	0.53	0.58	0.53	0.58	0.07	2.08	2.13	2.08	2.13	XXX
70551	TC	A	Mri brain w/o dye	0.00	11.13	11.25	NA	NA	0.49	11.62	11.74	NA	NA	XXX
70552		A	Mri brain w/dye	1.78	13.98	14.18	13.98	14.18	0.66	16.42	16.62	16.42	16.62	XXX
70552	26	A	Mri brain w/dye	1.78	0.64	0.70	0.64	0.70	0.08	2.50	2.56	2.50	2.56	XXX
70552	TC	A	Mri brain w/dye	0.00	13.34	13.48	NA	NA	0.58	13.92	14.06	NA	NA	XXX
70553		A	Mri brain w/o&w dye	2.36	25.55	25.89	25.55	25.89	1.19	29.10	29.44	29.10	29.44	XXX
70553	26	A	Mri brain w/o&w dye	2.36	0.84	0.92	0.84	0.92	0.10	3.30	3.38	3.30	3.38	XXX
70553	TC	A	Mri brain w/o&w dye	0.00	24.71	24.97	NA	NA	1.09	25.80	26.06	NA	NA	XXX
71010		A	Chest x-ray	0.18	0.53	0.55	0.53	0.55	0.03	0.74	0.76	0.74	0.76	XXX
71010	26	A	Chest x-ray	0.18	0.06	0.07	0.06	0.07	0.01	0.25	0.26	0.25	0.26	XXX
71010	TC	A	Chest x-ray	0.00	0.47	0.48	NA	NA	0.02	0.49	0.50	NA	NA	XXX
71015		A	Chest x-ray	0.21	0.60	0.62	0.60	0.62	0.03	0.84	0.86	0.84	0.86	XXX
71015	26	A	Chest x-ray	0.21	0.08	0.09	0.08	0.09	0.01	0.30	0.31	0.30	0.31	XXX
71015	TC	A	Chest x-ray	0.00	0.52	0.53	NA	NA	0.02	0.54	0.55	NA	NA	XXX
71020		A	Chest x-ray	0.22	0.69	0.71	0.69	0.71	0.04	0.95	0.97	0.95	0.97	XXX
71020	26	A	Chest x-ray	0.22	0.08	0.09	0.08	0.09	0.01	0.31	0.32	0.31	0.32	XXX
71020	TC	A	Chest x-ray	0.00	0.61	0.62	NA	NA	0.03	0.64	0.65	NA	NA	XXX
71021		A	Chest x-ray	0.27	0.83	0.85	0.83	0.85	0.05	1.15	1.17	1.15	1.17	XXX
71021	26	A	Chest x-ray	0.27	0.10	0.11	0.10	0.11	0.01	0.38	0.39	0.38	0.39	XXX
71021	TC	A	Chest x-ray	0.00	0.73	0.74	NA	NA	0.04	0.77	0.78	NA	NA	XXX
71022		A	Chest x-ray	0.31	0.84	0.86	0.84	0.86	0.06	1.21	1.23	1.21	1.23	XXX
71022	26	A	Chest x-ray	0.31	0.11	0.12	0.11	0.12	0.02	0.44	0.45	0.44	0.45	XXX
71022	TC	A	Chest x-ray	0.00	0.73	0.74	NA	NA	0.04	0.77	0.78	NA	NA	XXX
71023		A	Chest x-ray and fluoroscopy	0.38	0.92	0.94	0.92	0.94	0.06	1.36	1.38	1.36	1.38	XXX
71023	26	A	Chest x-ray and fluoroscopy	0.38	0.14	0.15	0.14	0.15	0.02	0.54	0.55	0.54	0.55	XXX
71023	TC	A	Chest x-ray and fluoroscopy	0.00	0.78	0.79	NA	NA	0.04	0.82	0.83	NA	NA	XXX
71030		A	Chest x-ray	0.31	0.89	0.91	0.89	0.91	0.05	1.25	1.27	1.25	1.27	XXX
71030	26	A	Chest x-ray	0.31	0.11	0.12	0.11	0.12	0.01	0.43	0.44	0.43	0.44	XXX
71030	TC	A	Chest x-ray	0.00	0.78	0.79	NA	NA	0.04	0.82	0.83	NA	NA	XXX
71034		A	Chest x-ray and fluoroscopy	0.46	1.61	1.64	1.61	1.64	0.09	2.16	2.19	2.16	2.19	XXX
71034	26	A	Chest x-ray and fluoroscopy	0.46	0.18	0.19	0.18	0.19	0.02	0.66	0.67	0.66	0.67	XXX
71034	TC	A	Chest x-ray and fluoroscopy	0.00	1.43	1.45	NA	NA	0.07	1.50	1.52	NA	NA	XXX
71035		A	Chest x-ray	0.18	0.58	0.60	0.58	0.60	0.03	0.79	0.81	0.79	0.81	XXX
71035	26	A	Chest x-ray	0.18	0.06	0.07	0.06	0.07	0.01	0.25	0.26	0.25	0.26	XXX
71035	TC	A	Chest x-ray	0.00	0.52	0.53	NA	NA	0.02	0.54	0.55	NA	NA	XXX
71036		D	X-ray guidance for biopsy	0.00	0.00	0.00	0.00	0.00	0.00	0.00	0.00	0.00	0.00	XXX
71036	26	D	X-ray guidance for biopsy	0.00	0.00	0.00	0.00	0.00	0.00	0.00	0.00	0.00	0.00	XXX
71036	TC	D	X-ray guidance for biopsy	0.00	0.00	0.00	NA	NA	0.00	0.00	0.00	NA	NA	XXX
71040		A	Contrast x-ray of bronchi	0.58	1.66	1.70	1.66	1.70	0.10	2.34	2.38	2.34	2.38	XXX
71040	26	A	Contrast x-ray of bronchi	0.58	0.21	0.23	0.21	0.23	0.03	0.82	0.84	0.82	0.84	XXX
71040	TC	A	Contrast x-ray of bronchi	0.00	1.45	1.47	NA	NA	0.07	1.52	1.54	NA	NA	XXX
71060		A	Contrast x-ray of bronchi	0.74	2.45	2.50	2.45	2.50	0.14	3.33	3.38	3.33	3.38	XXX
71060	26	A	Contrast x-ray of bronchi	0.74	0.26	0.29	0.26	0.29	0.03	1.03	1.06	1.03	1.06	XXX
71060	TC	A	Contrast x-ray of bronchi	0.00	2.19	2.21	NA	NA	0.11	2.30	2.32	NA	NA	XXX
71090		A	X-ray & pacemaker insertion	0.54	1.90	1.93	1.90	1.93	0.11	2.55	2.58	2.55	2.58	XXX
71090	26	A	X-ray & pacemaker insertion	0.54	0.23	0.24	0.23	0.24	0.02	0.79	0.80	0.79	0.80	XXX
71090	TC	A	X-ray & pacemaker insertion	0.00	1.67	1.69	NA	NA	0.09	1.76	1.78	NA	NA	XXX
71100		A	X-ray exam of ribs	0.22	0.65	0.67	0.65	0.67	0.04	0.91	0.93	0.91	0.93	XXX
71100	26	A	X-ray exam of ribs	0.22	0.08	0.09	0.08	0.09	0.01	0.31	0.32	0.31	0.32	XXX
71100	TC	A	X-ray exam of ribs	0.00	0.57	0.58	NA	NA	0.03	0.60	0.61	NA	NA	XXX
71101		A	X-ray exam of ribs/chest	0.27	0.76	0.78	0.76	0.78	0.04	1.07	1.09	1.07	1.09	XXX
71101	26	A	X-ray exam of ribs/chest	0.27	0.10	0.11	0.10	0.11	0.01	0.38	0.39	0.38	0.39	XXX
71101	TC	A	X-ray exam of ribs/chest	0.00	0.66	0.67	NA	NA	0.03	0.69	0.70	NA	NA	XXX

[1] CPT codes and descriptions only are copyright 2000 American Medical Association. All Rights Reserved. Applicable FARS/DFARS Apply.
[2] Copyright 1994 American Dental Association. All rights reserved.
[3] + Indicates RVUs are not used for Medicare payment.
[4] PE RVUs = Practice Expense Relative Value Units.

ADDENDUM B.—RELATIVE VALUE UNITS (RVU'S) AND RELATED INFORMATION—Continued

CPT[1]/ HCPCS[2]	MOD	Status	Description	Physician Work RVUs[3]	Fully Implemented Non-Facility PE RVUs	Year 2001 Transitional Non-Facility PE RVUs	Fully Implemented Facility PE RVUs	Year 2001 Transitional Facility PE RVUs	Mal-Practice RVUs	Fully Implemented Non-Facility Total	Year 2001 Transitional Non-Facility Total	Fully Implemented Facility Total	Year 2001 Transitional Facility Total	Global
71110	.....	A	X-ray exam of ribs	0.27	0.88	0.90	0.88	0.90	0.05	1.20	1.22	1.20	1.22	XXX
71110	26	A	X-ray exam of ribs	0.27	0.10	0.11	0.10	0.11	0.01	0.38	0.39	0.38	0.39	XXX
71110	TC	A	X-ray exam of ribs	0.00	0.78	0.79	NA	NA	0.04	0.82	0.83	NA	NA	XXX
71111	.....	A	X-ray exam of ribs/ chest	0.32	0.99	1.01	0.99	1.01	0.06	1.37	1.39	1.37	1.39	XXX
71111	26	A	X-ray exam of ribs/ chest	0.32	0.11	0.12	0.11	0.12	0.01	0.44	0.45	0.44	0.45	XXX
71111	TC	A	X-ray exam of ribs/ chest	0.00	0.88	0.89	NA	NA	0.05	0.93	0.94	NA	NA	XXX
71120	.....	A	X-ray exam of breastbone	0.20	0.71	0.73	0.71	0.73	0.04	0.95	0.97	0.95	0.97	XXX
71120	26	A	X-ray exam of breastbone	0.20	0.07	0.08	0.07	0.08	0.01	0.28	0.29	0.28	0.29	XXX
71120	TC	A	X-ray exam of breastbone	0.00	0.64	0.65	NA	NA	0.03	0.67	0.68	NA	NA	XXX
71130	.....	A	X-ray exam of breastbone	0.22	0.78	0.80	0.78	0.80	0.04	1.04	1.06	1.04	1.06	XXX
71130	26	A	X-ray exam of breastbone	0.22	0.08	0.09	0.08	0.09	0.01	0.31	0.32	0.31	0.32	XXX
71130	TC	A	X-ray exam of breastbone	0.00	0.70	0.71	NA	NA	0.03	0.73	0.74	NA	NA	XXX
71250	.....	A	Ct thorax w/o dye	1.16	6.27	6.37	6.27	6.37	0.31	7.74	7.84	7.74	7.84	XXX
71250	26	A	Ct thorax w/o dye	1.16	0.41	0.45	0.41	0.45	0.05	1.62	1.66	1.62	1.66	XXX
71250	TC	A	Ct thorax w/o dye	0.00	5.86	5.92	NA	NA	0.26	6.12	6.18	NA	NA	XXX
71260	.....	A	Ct thorax w/dye	1.24	7.45	7.57	7.45	7.57	0.36	9.05	9.17	9.05	9.17	XXX
71260	26	A	Ct thorax w/dye	1.24	0.44	0.48	0.44	0.48	0.05	1.73	1.77	1.73	1.77	XXX
71260	TC	A	Ct thorax w/dye	0.00	7.01	7.09	NA	NA	0.31	7.32	7.40	NA	NA	XXX
71270	.....	A	Ct thorax w/o&w dye	1.38	9.27	9.40	9.27	9.40	0.44	11.09	11.22	11.09	11.22	XXX
71270	26	A	Ct thorax w/o&w dye	1.38	0.49	0.53	0.49	0.53	0.06	1.93	1.97	1.93	1.97	XXX
71270	TC	A	Ct thorax w/o&w dye	0.00	8.78	8.87	NA	NA	0.38	9.16	9.25	NA	NA	XXX
71275	.....	A	Ct angiography, chest	1.20	9.26	9.26	9.26	9.26	0.37	10.83	10.83	10.83	10.83	XXX
71275	26	A	Ct angiography, chest	1.20	0.48	0.48	0.48	0.48	0.05	1.73	1.73	1.73	1.73	XXX
71275	TC	A	Ct angiography, chest	0.00	8.78	8.78	NA	NA	0.32	9.10	9.10	NA	NA	XXX
71550	.....	A	Mri chest w/o dye	1.10	11.52	11.74	11.52	11.74	0.41	13.03	13.25	13.03	13.25	XXX
71550	26	A	Mri chest w/o dye	1.10	0.39	0.49	0.39	0.49	0.04	1.53	1.63	1.53	1.63	XXX
71550	TC	A	Mri chest w/o dye	0.00	11.13	11.25	NA	NA	0.37	11.50	11.62	NA	NA	XXX
71551	.....	A	Mri chest w/dye	1.30	13.80	13.80	13.80	13.80	0.48	15.58	15.58	15.58	15.58	XXX
71551	26	A	Mri chest w/dye	1.30	0.46	0.46	0.46	0.46	0.05	1.81	1.81	1.81	1.81	XXX
71551	TC	A	Mri chest w/dye	0.00	13.34	13.34	NA	NA	0.43	13.77	13.77	NA	NA	XXX
71552	.....	A	Mri chest w/o&w dye	1.70	25.31	25.31	25.31	25.31	0.63	27.64	27.64	27.64	27.64	XXX
71552	26	A	Mri chest w/o&w dye	1.70	0.60	0.60	0.60	0.60	0.07	2.37	2.37	2.37	2.37	XXX
71552	TC	A	Mri chest w/o&w dye	0.00	24.71	24.71	NA	NA	0.56	25.27	25.27	NA	NA	XXX
71555	.....	R	Mri angio chest w or w/o dye	1.81	11.78	11.93	11.78	11.93	0.57	14.16	14.31	14.16	14.31	XXX
71555	26	R	Mri angio chest w or w/o dye	1.81	0.65	0.68	0.65	0.68	0.08	2.54	2.57	2.54	2.57	XXX
71555	TC	R	Mri angio chest w or w/o dye	0.00	11.13	11.25	NA	NA	0.49	11.62	11.74	NA	NA	XXX
72010	.....	A	X-ray exam of spine	0.45	1.18	1.21	1.18	1.21	0.08	1.71	1.74	1.71	1.74	XXX
72010	26	A	X-ray exam of spine	0.45	0.16	0.18	0.16	0.18	0.03	0.64	0.66	0.64	0.66	XXX
72010	TC	A	X-ray exam of spine	0.00	1.02	1.03	NA	NA	0.05	1.07	1.08	NA	NA	XXX
72020	.....	A	X-ray exam of spine	0.15	0.46	0.48	0.46	0.48	0.03	0.64	0.66	0.64	0.66	XXX
72020	26	A	X-ray exam of spine	0.15	0.05	0.06	0.05	0.06	0.01	0.21	0.22	0.21	0.22	XXX
72020	TC	A	X-ray exam of spine	0.00	0.41	0.42	NA	NA	0.02	0.43	0.44	NA	NA	XXX
72040	.....	A	X-ray exam of neck spine	0.22	0.68	0.70	0.68	0.70	0.04	0.94	0.96	0.94	0.96	XXX
72040	26	A	X-ray exam of neck spine	0.22	0.08	0.09	0.08	0.09	0.01	0.31	0.32	0.31	0.32	XXX
72040	TC	A	X-ray exam of neck spine	0.00	0.60	0.61	NA	NA	0.03	0.63	0.64	NA	NA	XXX
72050	.....	A	X-ray exam of neck spine	0.31	0.99	1.01	0.99	1.01	0.07	1.37	1.39	1.37	1.39	XXX
72050	26	A	X-ray exam of neck spine	0.31	0.11	0.12	0.11	0.12	0.02	0.44	0.45	0.44	0.45	XXX
72050	TC	A	X-ray exam of neck spine	0.00	0.88	0.89	NA	NA	0.05	0.93	0.94	NA	NA	XXX
72052	.....	A	X-ray exam of neck spine	0.36	1.25	1.27	1.25	1.27	0.07	1.68	1.70	1.68	1.70	XXX
72052	26	A	X-ray exam of neck spine	0.36	0.13	0.14	0.13	0.14	0.02	0.51	0.52	0.51	0.52	XXX
72052	TC	A	X-ray exam of neck spine	0.00	1.12	1.13	NA	NA	0.05	1.17	1.18	NA	NA	XXX
72069	.....	A	X-ray exam of trunk spine	0.22	0.57	0.59	0.57	0.59	0.04	0.83	0.85	0.83	0.85	XXX
72069	26	A	X-ray exam of trunk spine	0.22	0.08	0.09	0.08	0.09	0.02	0.32	0.33	0.32	0.33	XXX
72069	TC	A	X-ray exam of trunk spine	0.00	0.49	0.50	NA	NA	0.02	0.51	0.52	NA	NA	XXX
72070	.....	A	X-ray exam of thoracic spine	0.22	0.72	0.74	0.72	0.74	0.04	0.98	1.00	0.98	1.00	XXX
72070	26	A	X-ray exam of thoracic spine	0.22	0.08	0.09	0.08	0.09	0.01	0.31	0.32	0.31	0.32	XXX
72070	TC	A	X-ray exam of thoracic spine	0.00	0.64	0.65	NA	NA	0.03	0.67	0.68	NA	NA	XXX
72072	.....	A	X-ray exam of thoracic spine	0.22	0.81	0.83	0.81	0.83	0.05	1.08	1.10	1.08	1.10	XXX
72072	26	A	X-ray exam of thoracic spine	0.22	0.08	0.09	0.08	0.09	0.01	0.31	0.32	0.31	0.32	XXX
72072	TC	A	X-ray exam of thoracic spine	0.00	0.73	0.74	NA	NA	0.04	0.77	0.78	NA	NA	XXX
72074	.....	A	X-ray exam of thoracic spine	0.22	0.98	1.00	0.98	1.00	0.06	1.26	1.28	1.26	1.28	XXX
72074	26	A	X-ray exam of thoracic spine	0.22	0.08	0.09	0.08	0.09	0.01	0.31	0.32	0.31	0.32	XXX
72074	TC	A	X-ray exam of thoracic spine	0.00	0.90	0.91	NA	NA	0.05	0.95	0.96	NA	NA	XXX
72080	.....	A	X-ray exam of trunk spine	0.22	0.74	0.76	0.74	0.76	0.05	1.01	1.03	1.01	1.03	XXX
72080	26	A	X-ray exam of trunk spine	0.22	0.08	0.09	0.08	0.09	0.02	0.32	0.33	0.32	0.33	XXX
72080	TC	A	X-ray exam of trunk spine	0.00	0.66	0.67	NA	NA	0.03	0.69	0.70	NA	NA	XXX
72090	.....	A	X-ray exam of trunk spine	0.28	0.76	0.78	0.76	0.78	0.05	1.09	1.11	1.09	1.11	XXX
72090	26	A	X-ray exam of trunk spine	0.28	0.10	0.11	0.10	0.11	0.02	0.40	0.41	0.40	0.41	XXX
72090	TC	A	X-ray exam of trunk spine	0.00	0.66	0.67	NA	NA	0.03	0.69	0.70	NA	NA	XXX
72100	.....	A	X-ray exam of lower spine	0.22	0.74	0.76	0.74	0.76	0.05	1.01	1.03	1.01	1.03	XXX
72100	26	A	X-ray exam of lower spine	0.22	0.08	0.09	0.08	0.09	0.02	0.32	0.33	0.32	0.33	XXX
72100	TC	A	X-ray exam of lower spine	0.00	0.66	0.67	NA	NA	0.03	0.69	0.70	NA	NA	XXX
72110	.....	A	X-ray exam of lower spine	0.31	1.01	1.03	1.01	1.03	0.07	1.39	1.41	1.39	1.41	XXX
72110	26	A	X-ray exam of lower spine	0.31	0.11	0.12	0.11	0.12	0.02	0.44	0.45	0.44	0.45	XXX
72110	TC	A	X-ray exam of lower spine	0.00	0.90	0.91	NA	NA	0.05	0.95	0.96	NA	NA	XXX
72114	.....	A	X-ray exam of lower spine	0.36	1.31	1.33	1.31	1.33	0.08	1.75	1.77	1.75	1.77	XXX
72114	26	A	X-ray exam of lower spine	0.36	0.13	0.14	0.13	0.14	0.03	0.52	0.53	0.52	0.53	XXX
72114	TC	A	X-ray exam of lower spine	0.00	1.18	1.19	NA	NA	0.05	1.23	1.24	NA	NA	XXX
72120	.....	A	X-ray exam of lower spine	0.22	0.96	0.98	0.96	0.98	0.07	1.25	1.27	1.25	1.27	XXX
72120	26	A	X-ray exam of lower spine	0.22	0.08	0.09	0.08	0.09	0.02	0.32	0.33	0.32	0.33	XXX
72120	TC	A	X-ray exam of lower spine	0.00	0.88	0.89	NA	NA	0.05	0.93	0.94	NA	NA	XXX
72125	.....	A	Ct neck spine w/o dye	1.16	6.27	6.37	6.27	6.37	0.31	7.74	7.84	7.74	7.84	XXX
72125	26	A	Ct neck spine w/o dye	1.16	0.41	0.45	0.41	0.45	0.05	1.62	1.66	1.62	1.66	XXX

[1] CPT codes and descriptions only are copyright 2000 American Medical Association. All Rights Reserved. Applicable FARS/DFARS Apply.
[2] Copyright 1994 American Dental Association. All rights reserved.
[3] + Indicates RVUs are not used for Medicare payment.
[4] PE RVUs = Practice Expense Relative Value Units.

ADDENDUM B.—RELATIVE VALUE UNITS (RVU'S) AND RELATED INFORMATION—Continued

CPT[1]/ HCPCS[2]	MOD	Status	Description	Physician Work RVUs[3]	Fully Implemented Non-Facility PE RVUs	Year 2001 Transitional Non-Facility PE RVUs	Fully Implemented Facility PE RVUs	Year 2001 Transitional Facility PE RVUs	Mal-Practice RVUs	Fully Implemented Non-Facility Total	Year 2001 Transitional Non-Facility Total	Fully Implemented Facility Total	Year 2001 Transitional Facility Total	Global
72125	TC	A	Ct neck spine w/o dye	0.00	5.86	5.92	NA	NA	0.26	6.12	6.18	NA	NA	XXX
72126		A	Ct neck spine w/dye	1.22	7.44	7.56	7.44	7.56	0.36	9.02	9.14	9.02	9.14	XXX
72126	26	A	Ct neck spine w/dye	1.22	0.43	0.47	0.43	0.47	0.05	1.70	1.74	1.70	1.74	XXX
72126	TC	A	Ct neck spine w/dye	0.00	7.01	7.09	NA	NA	0.31	7.32	7.40	NA	NA	XXX
72127		A	Ct neck spine w/o&w dye	1.27	9.23	9.36	9.23	9.36	0.44	10.94	11.07	10.94	11.07	XXX
72127	26	A	Ct neck spine w/o&w dye	1.27	0.45	0.49	0.45	0.49	0.06	1.78	1.82	1.78	1.82	XXX
72127	TC	A	Ct neck spine w/o&w dye	0.00	8.78	8.87	NA	NA	0.38	9.16	9.25	NA	NA	XXX
72128		A	Ct chest spine w/o dye	1.16	6.27	6.37	6.27	6.37	0.31	7.74	7.84	7.74	7.84	XXX
72128	26	A	Ct chest spine w/o dye	1.16	0.41	0.45	0.41	0.45	0.05	1.62	1.66	1.62	1.66	XXX
72128	TC	A	Ct chest spine w/o dye	0.00	5.86	5.92	NA	NA	0.26	6.12	6.18	NA	NA	XXX
72129		A	Ct chest spine w/dye	1.22	7.44	7.56	7.44	7.56	0.36	9.02	9.14	9.02	9.14	XXX
72129	26	A	Ct chest spine w/dye	1.22	0.43	0.47	0.43	0.47	0.05	1.70	1.74	1.70	1.74	XXX
72129	TC	A	Ct chest spine w/dye	0.00	7.01	7.09	NA	NA	0.31	7.32	7.40	NA	NA	XXX
72130		A	Ct chest spine w/o&w dye	1.27	9.23	9.36	9.23	9.36	0.44	10.94	11.07	10.94	11.07	XXX
72130	26	A	Ct chest spine w/o&w dye	1.27	0.45	0.49	0.45	0.49	0.06	1.78	1.82	1.78	1.82	XXX
72130	TC	A	Ct chest spine w/o&w dye	0.00	8.78	8.87	NA	NA	0.38	9.16	9.25	NA	NA	XXX
72131		A	Ct lumbar spine w/o dye	1.16	6.27	6.37	6.27	6.37	0.31	7.74	7.84	7.74	7.84	XXX
72131	26	A	Ct lumbar spine w/o dye	1.16	0.41	0.45	0.41	0.45	0.05	1.62	1.66	1.62	1.66	XXX
72131	TC	A	Ct lumbar spine w/o dye	0.00	5.86	5.92	NA	NA	0.26	6.12	6.18	NA	NA	XXX
72132		A	Ct lumbar spine w/dye	1.22	7.44	7.56	7.44	7.56	0.37	9.03	9.15	9.03	9.15	XXX
72132	26	A	Ct lumbar spine w/dye	1.22	0.43	0.47	0.43	0.47	0.06	1.71	1.75	1.71	1.75	XXX
72132	TC	A	Ct lumbar spine w/dye	0.00	7.01	7.09	NA	NA	0.31	7.32	7.40	NA	NA	XXX
72133		A	Ct lumbar spine w/o&w dye	1.27	9.24	9.37	9.24	9.37	0.44	10.95	11.08	10.95	11.08	XXX
72133	26	A	Ct lumbar spine w/o&w dye	1.27	0.46	0.50	0.46	0.50	0.06	1.79	1.83	1.79	1.83	XXX
72133	TC	A	Ct lumbar spine w/o&w dye	0.00	8.78	8.87	NA	NA	0.38	9.16	9.25	NA	NA	XXX
72141		A	Mri neck spine w/o dye	1.60	11.70	11.87	11.70	11.87	0.56	13.86	14.03	13.86	14.03	XXX
72141	26	A	Mri neck spine w/o dye	1.60	0.57	0.62	0.57	0.62	0.07	2.24	2.29	2.24	2.29	XXX
72141	TC	A	Mri neck spine w/o dye	0.00	11.13	11.25	NA	NA	0.49	11.62	11.74	NA	NA	XXX
72142		A	Mri neck spine w/dye	1.92	14.04	14.24	14.04	14.24	0.67	16.63	16.83	16.63	16.83	XXX
72142	26	A	Mri neck spine w/dye	1.92	0.70	0.76	0.70	0.76	0.09	2.71	2.77	2.71	2.77	XXX
72142	TC	A	Mri neck spine w/dye	0.00	13.34	13.48	NA	NA	0.58	13.92	14.06	NA	NA	XXX
72146		A	Mri chest spine w/o dye	1.60	12.93	13.11	12.93	13.11	0.60	15.13	15.31	15.13	15.31	XXX
72146	26	A	Mri chest spine w/o dye	1.60	0.57	0.62	0.57	0.62	0.07	2.24	2.29	2.24	2.29	XXX
72146	TC	A	Mri chest spine w/o dye	0.00	12.36	12.49	NA	NA	0.53	12.89	13.02	NA	NA	XXX
72147		A	Mri chest spine w/dye	1.92	14.03	14.23	14.03	14.23	0.67	16.62	16.82	16.62	16.82	XXX
72147	26	A	Mri chest spine w/dye	1.92	0.69	0.75	0.69	0.75	0.09	2.70	2.76	2.70	2.76	XXX
72147	TC	A	Mri chest spine w/dye	0.00	13.34	13.48	NA	NA	0.58	13.92	14.06	NA	NA	XXX
72148		A	Mri lumbar spine w/o dye	1.48	12.89	13.07	12.89	13.07	0.60	14.97	15.15	14.97	15.15	XXX
72148	26	A	Mri lumbar spine w/o dye	1.48	0.53	0.58	0.53	0.58	0.07	2.08	2.13	2.08	2.13	XXX
72148	TC	A	Mri lumbar spine w/o dye	0.00	12.36	12.49	NA	NA	0.53	12.89	13.02	NA	NA	XXX
72149		A	Mri lumbar spine w/dye	1.78	13.99	14.19	13.99	14.19	0.67	16.44	16.64	16.44	16.64	XXX
72149	26	A	Mri lumbar spine w/dye	1.78	0.65	0.71	0.65	0.71	0.09	2.52	2.58	2.52	2.58	XXX
72149	TC	A	Mri lumbar spine w/dye	0.00	13.34	13.48	NA	NA	0.58	13.92	14.06	NA	NA	XXX
72156		A	Mri neck spine w/o&w dye	2.57	25.63	25.97	25.63	25.97	1.20	29.40	29.74	29.40	29.74	XXX
72156	26	A	Mri neck spine w/o&w dye	2.57	0.92	1.00	0.92	1.00	0.11	3.60	3.68	3.60	3.68	XXX
72156	TC	A	Mri neck spine w/o&w dye	0.00	24.71	24.97	NA	NA	1.09	25.80	26.06	NA	NA	XXX
72157		A	Mri chest spine w/o&w dye	2.57	25.63	25.97	25.63	25.97	1.20	29.40	29.74	29.40	29.74	XXX
72157	26	A	Mri chest spine w/o&w dye	2.57	0.92	1.00	0.92	1.00	0.11	3.60	3.68	3.60	3.68	XXX
72157	TC	A	Mri chest spine w/o&w dye	0.00	24.71	24.97	NA	NA	1.09	25.80	26.06	NA	NA	XXX
72158		A	Mri lumbar spine w/o&w dye	2.36	25.55	25.89	25.55	25.89	1.20	29.11	29.45	29.11	29.45	XXX
72158	26	A	Mri lumbar spine w/o&w dye	2.36	0.84	0.92	0.84	0.92	0.11	3.31	3.39	3.31	3.39	XXX
72158	TC	A	Mri lumbar spine w/o&w dye	0.00	24.71	24.97	NA	NA	1.09	25.80	26.06	NA	NA	XXX
72159		N	Mr angio spine w/o&w dye	+1.80	13.08	13.21	13.08	13.21	0.61	15.49	15.62	15.49	15.62	XXX
72159	26	N	Mr angio spine w/o&w dye	+1.80	0.72	0.72	0.72	0.72	0.08	2.60	2.60	2.60	2.60	XXX
72159	TC	N	Mr angio spine w/o&w dye	+0.00	12.36	12.49	NA	NA	0.53	12.89	13.02	NA	NA	XXX
72170		A	X-ray exam of pelvis	0.17	0.58	0.60	0.58	0.60	0.03	0.78	0.80	0.78	0.80	XXX
72170	26	A	X-ray exam of pelvis	0.17	0.06	0.07	0.06	0.07	0.01	0.24	0.25	0.24	0.25	XXX
72170	TC	A	X-ray exam of pelvis	0.00	0.52	0.53	NA	NA	0.02	0.54	0.55	NA	NA	XXX
72190		A	X-ray exam of pelvis	0.21	0.74	0.76	0.74	0.76	0.04	0.99	1.01	0.99	1.01	XXX
72190	26	A	X-ray exam of pelvis	0.21	0.08	0.09	0.08	0.09	0.01	0.30	0.31	0.30	0.31	XXX
72190	TC	A	X-ray exam of pelvis	0.00	0.66	0.67	NA	NA	0.03	0.69	0.70	NA	NA	XXX
72191		A	Ct angiograph pelv w/o&w dye	1.20	8.91	8.91	8.91	8.91	0.37	10.48	10.48	10.48	10.48	XXX
72191	26	A	Ct angiograph pelv w/o&w dye	1.20	0.48	0.48	0.48	0.48	0.05	1.73	1.73	1.73	1.73	XXX
72191	TC	A	Ct angiograph pelv w/o&w dye	0.00	8.43	8.43	NA	NA	0.32	8.75	8.75	NA	NA	XXX
72192		A	Ct pelvis w/o dye	1.09	6.25	6.34	6.25	6.34	0.31	7.65	7.74	7.65	7.74	XXX
72192	26	A	Ct pelvis w/o dye	1.09	0.39	0.42	0.39	0.42	0.05	1.53	1.56	1.53	1.56	XXX
72192	TC	A	Ct pelvis w/o dye	0.00	5.86	5.92	NA	NA	0.26	6.12	6.18	NA	NA	XXX
72193		A	Ct pelvis w/dye	1.16	7.20	7.31	7.20	7.31	0.35	8.71	8.82	8.71	8.82	XXX
72193	26	A	Ct pelvis w/dye	1.16	0.41	0.45	0.41	0.45	0.05	1.62	1.66	1.62	1.66	XXX
72193	TC	A	Ct pelvis w/dye	0.00	6.79	6.86	NA	NA	0.30	7.09	7.16	NA	NA	XXX
72194		A	Ct pelvis w/o&w dye	1.22	8.86	8.99	8.86	8.99	0.41	10.49	10.62	10.49	10.62	XXX
72194	26	A	Ct pelvis w/o&w dye	1.22	0.43	0.47	0.43	0.47	0.05	1.70	1.74	1.70	1.74	XXX
72194	TC	A	Ct pelvis w/o&w dye	0.00	8.43	8.52	NA	NA	0.36	8.79	8.88	NA	NA	XXX
72195		A	Mri pelvis w/o dye	1.10	11.52	11.52	11.52	11.52	0.41	13.03	13.03	13.03	13.03	XXX
72195	26	A	Mri pelvis w/o dye	1.10	0.39	0.39	0.39	0.39	0.04	1.53	1.53	1.53	1.53	XXX
72195	TC	A	Mri pelvis w/o dye	0.00	11.13	11.13	NA	NA	0.37	11.50	11.50	NA	NA	XXX
72196		A	Mri pelvis w/dye	1.30	13.80	13.44	13.80	13.44	0.48	15.58	15.22	15.58	15.22	XXX
72196	26	A	Mri pelvis w/dye	1.30	0.46	0.54	0.46	0.54	0.05	1.81	1.89	1.81	1.89	XXX
72196	TC	A	Mri pelvis w/dye	0.00	13.34	12.90	NA	NA	0.43	13.77	13.33	NA	NA	XXX
72197		A	Mri pelvis w/o & w dye	1.70	25.31	25.31	25.31	25.31	0.85	27.86	27.86	27.86	27.86	XXX
72197	26	A	Mri pelvis w/o & w dye	1.70	0.60	0.60	0.60	0.60	0.09	2.39	2.39	2.39	2.39	XXX
72197	TC	A	Mri pelvis w/o & w dye	0.00	24.71	24.71	NA	NA	0.76	25.47	25.47	NA	NA	XXX
72198		N	Mr angio pelvis w/o&w dye	+1.80	11.85	11.99	11.85	11.99	0.57	14.22	14.36	14.22	14.36	XXX

[1] CPT codes and descriptions only are copyright 2000 American Medical Association. All Rights Reserved. Applicable FARS/DFARS Apply.
[2] Copyright 1994 American Dental Association. All rights reserved.
[3] + Indicates RVUs are not used for Medicare payment.
[4] PE RVUs = Practice Expense Relative Value Units.

ADDENDUM B.—RELATIVE VALUE UNITS (RVU'S) AND RELATED INFORMATION—Continued

CPT[1]/ HCPCS[2]	MOD	Status	Description	Physician Work RVUs[3]	Fully Implemented Non-Facility PE RVUs	Year 2001 Transitional Non-Facility PE RVUs	Fully Implemented Facility PE RVUs	Year 2001 Transitional Facility PE RVUs	Mal-Practice RVUs	Fully Implemented Non-Facility Total	Year 2001 Transitional Non-Facility Total	Fully Implemented Facility Total	Year 2001 Transitional Facility Total	Global
72198	26	N	Mr angio pelvis w/o&w dye	+1.80	0.72	0.74	0.72	0.74	0.08	2.60	2.62	2.60	2.62	XXX
72198	TC	N	Mr angio pelvis w/o&w dye	+0.00	11.13	11.25	NA	NA	0.49	11.62	11.74	NA	NA	XXX
72200		A	X-ray exam sacroiliac joints	0.17	0.58	0.60	0.58	0.60	0.03	0.78	0.80	0.78	0.80	XXX
72200	26	A	X-ray exam sacroiliac joints	0.17	0.06	0.07	0.06	0.07	0.01	0.24	0.25	0.24	0.25	XXX
72200	TC	A	X-ray exam sacroiliac joints	0.00	0.52	0.53	NA	NA	0.02	0.54	0.55	NA	NA	XXX
72202		A	X-ray exam sacroiliac joints	0.19	0.68	0.70	0.68	0.70	0.04	0.91	0.93	0.91	0.93	XXX
72202	26	A	X-ray exam sacroiliac joints	0.19	0.07	0.08	0.07	0.08	0.01	0.27	0.28	0.27	0.28	XXX
72202	TC	A	X-ray exam sacroiliac joints	0.00	0.61	0.62	NA	NA	0.03	0.64	0.65	NA	NA	XXX
72220		A	X-ray exam of tailbone	0.17	0.63	0.65	0.63	0.65	0.04	0.84	0.86	0.84	0.86	XXX
72220	26	A	X-ray exam of tailbone	0.17	0.06	0.07	0.06	0.07	0.01	0.24	0.25	0.24	0.25	XXX
72220	TC	A	X-ray exam of tailbone	0.00	0.57	0.58	NA	NA	0.03	0.60	0.61	NA	NA	XXX
72240		A	Contrast x-ray of neck spine	0.91	5.03	5.11	5.03	5.11	0.25	6.19	6.27	6.19	6.27	XXX
72240	26	A	Contrast x-ray of neck spine	0.91	0.31	0.34	0.31	0.34	0.04	1.26	1.29	1.26	1.29	XXX
72240	TC	A	Contrast x-ray of neck spine	0.00	4.72	4.77	NA	NA	0.21	4.93	4.98	NA	NA	XXX
72255		A	Contrast x-ray, thorax spine	0.91	4.59	4.68	4.59	4.68	0.22	5.72	5.81	5.72	5.81	XXX
72255	26	A	Contrast x-ray, thorax spine	0.91	0.29	0.33	0.29	0.33	0.04	1.24	1.28	1.24	1.28	XXX
72255	TC	A	Contrast x-ray, thorax spine	0.00	4.30	4.35	NA	NA	0.18	4.48	4.53	NA	NA	XXX
72265		A	Contrast x-ray, lower spine	0.83	4.31	4.39	4.31	4.39	0.22	5.36	5.44	5.36	5.44	XXX
72265	26	A	Contrast x-ray, lower spine	0.83	0.27	0.31	0.27	0.31	0.04	1.14	1.18	1.14	1.18	XXX
72265	TC	A	Contrast x-ray, lower spine	0.00	4.04	4.08	NA	NA	0.18	4.22	4.26	NA	NA	XXX
72270		A	Contrast x-ray of spine	1.33	6.49	6.61	6.49	6.61	0.34	8.16	8.28	8.16	8.28	XXX
72270	26	A	Contrast x-ray of spine	1.33	0.44	0.49	0.44	0.49	0.07	1.84	1.89	1.84	1.89	XXX
72270	TC	A	Contrast x-ray of spine	0.00	6.05	6.12	NA	NA	0.27	6.32	6.39	NA	NA	XXX
72275		A	Epidurography	0.76	2.33	2.33	2.33	2.33	0.21	3.30	3.30	3.30	3.30	XXX
72275	26	A	Epidurography	0.76	0.25	0.25	0.25	0.25	0.03	1.04	1.04	1.04	1.04	XXX
72275	TC	A	Epidurography	0.00	2.08	2.08	NA	NA	0.18	2.26	2.26	NA	NA	XXX
72285		A	X-ray c/t spine disk	1.16	8.71	8.81	8.71	8.81	0.42	10.29	10.39	10.29	10.39	XXX
72285	26	A	X-ray c/t spine disk	1.16	0.39	0.40	0.39	0.40	0.06	1.61	1.62	1.61	1.62	XXX
72285	TC	A	X-ray c/t spine disk	0.00	8.32	8.41	NA	NA	0.36	8.68	8.77	NA	NA	XXX
72295		A	X-ray of lower spine disk	0.83	8.09	8.20	8.09	8.20	0.37	9.29	9.40	9.29	9.40	XXX
72295	26	A	X-ray of lower spine disk	0.83	0.29	0.32	0.29	0.32	0.04	1.16	1.19	1.16	1.19	XXX
72295	TC	A	X-ray of lower spine disk	0.00	7.80	7.88	NA	NA	0.33	8.13	8.21	NA	NA	XXX
73000		A	X-ray exam of collar bone	0.16	0.58	0.60	0.58	0.60	0.03	0.77	0.79	0.77	0.79	XXX
73000	26	A	X-ray exam of collar bone	0.16	0.06	0.07	0.06	0.07	0.01	0.23	0.24	0.23	0.24	XXX
73000	TC	A	X-ray exam of collar bone	0.00	0.52	0.53	NA	NA	0.02	0.54	0.55	NA	NA	XXX
73010		A	X-ray exam of shoulder blade	0.17	0.58	0.60	0.58	0.60	0.03	0.78	0.80	0.78	0.80	XXX
73010	26	A	X-ray exam of shoulder blade	0.17	0.06	0.07	0.06	0.07	0.01	0.24	0.25	0.24	0.25	XXX
73010	TC	A	X-ray exam of shoulder blade	0.00	0.52	0.53	NA	NA	0.02	0.54	0.55	NA	NA	XXX
73020		A	X-ray exam of shoulder	0.15	0.52	0.54	0.52	0.54	0.03	0.70	0.72	0.70	0.72	XXX
73020	26	A	X-ray exam of shoulder	0.15	0.05	0.06	0.05	0.06	0.01	0.21	0.22	0.21	0.22	XXX
73020	TC	A	X-ray exam of shoulder	0.00	0.47	0.48	NA	NA	0.02	0.49	0.50	NA	NA	XXX
73030		A	X-ray exam of shoulder	0.18	0.63	0.65	0.63	0.65	0.04	0.85	0.87	0.85	0.87	XXX
73030	26	A	X-ray exam of shoulder	0.18	0.06	0.07	0.06	0.07	0.01	0.25	0.26	0.25	0.26	XXX
73030	TC	A	X-ray exam of shoulder	0.00	0.57	0.58	NA	NA	0.03	0.60	0.61	NA	NA	XXX
73040		A	Contrast x-ray of shoulder	0.54	2.27	2.31	2.27	2.31	0.13	2.94	2.98	2.94	2.98	XXX
73040	26	A	Contrast x-ray of shoulder	0.54	0.19	0.21	0.19	0.21	0.03	0.76	0.78	0.76	0.78	XXX
73040	TC	A	Contrast x-ray of shoulder	0.00	2.08	2.10	NA	NA	0.10	2.18	2.20	NA	NA	XXX
73050		A	X-ray exam of shoulders	0.20	0.73	0.75	0.73	0.75	0.05	0.98	1.00	0.98	1.00	XXX
73050	26	A	X-ray exam of shoulders	0.20	0.07	0.08	0.07	0.08	0.02	0.29	0.30	0.29	0.30	XXX
73050	TC	A	X-ray exam of shoulders	0.00	0.66	0.67	NA	NA	0.03	0.69	0.70	NA	NA	XXX
73060		A	X-ray exam of humerus	0.17	0.63	0.65	0.63	0.65	0.04	0.84	0.86	0.84	0.86	XXX
73060	26	A	X-ray exam of humerus	0.17	0.06	0.07	0.06	0.07	0.01	0.24	0.25	0.24	0.25	XXX
73060	TC	A	X-ray exam of humerus	0.00	0.57	0.58	NA	NA	0.03	0.60	0.61	NA	NA	XXX
73070		A	X-ray exam of elbow	0.15	0.57	0.59	0.57	0.59	0.03	0.75	0.77	0.75	0.77	XXX
73070	26	A	X-ray exam of elbow	0.15	0.05	0.06	0.05	0.06	0.01	0.21	0.22	0.21	0.22	XXX
73070	TC	A	X-ray exam of elbow	0.00	0.52	0.53	NA	NA	0.02	0.54	0.55	NA	NA	XXX
73080		A	X-ray exam of elbow	0.17	0.63	0.65	0.63	0.65	0.04	0.84	0.86	0.84	0.86	XXX
73080	26	A	X-ray exam of elbow	0.17	0.06	0.07	0.06	0.07	0.01	0.24	0.25	0.24	0.25	XXX
73080	TC	A	X-ray exam of elbow	0.00	0.57	0.58	NA	NA	0.03	0.60	0.61	NA	NA	XXX
73085		A	Contrast x-ray of elbow	0.54	2.28	2.32	2.28	2.32	0.13	2.95	2.99	2.95	2.99	XXX
73085	26	A	Contrast x-ray of elbow	0.54	0.20	0.22	0.20	0.22	0.03	0.77	0.79	0.77	0.79	XXX
73085	TC	A	Contrast x-ray of elbow	0.00	2.08	2.10	NA	NA	0.10	2.18	2.20	NA	NA	XXX
73090		A	X-ray exam of forearm	0.16	0.58	0.60	0.58	0.60	0.03	0.77	0.79	0.77	0.79	XXX
73090	26	A	X-ray exam of forearm	0.16	0.06	0.07	0.06	0.07	0.01	0.23	0.24	0.23	0.24	XXX
73090	TC	A	X-ray exam of forearm	0.00	0.52	0.53	NA	NA	0.02	0.54	0.55	NA	NA	XXX
73092		A	X-ray exam of arm, infant	0.16	0.55	0.57	0.55	0.57	0.03	0.74	0.76	0.74	0.76	XXX
73092	26	A	X-ray exam of arm, infant	0.16	0.06	0.07	0.06	0.07	0.01	0.23	0.24	0.23	0.24	XXX
73092	TC	A	X-ray exam of arm, infant	0.00	0.49	0.50	NA	NA	0.02	0.51	0.52	NA	NA	XXX
73100		A	X-ray exam of wrist	0.16	0.55	0.57	0.55	0.57	0.04	0.75	0.77	0.75	0.77	XXX
73100	26	A	X-ray exam of wrist	0.16	0.06	0.07	0.06	0.07	0.02	0.24	0.25	0.24	0.25	XXX
73100	TC	A	X-ray exam of wrist	0.00	0.49	0.50	NA	NA	0.02	0.51	0.52	NA	NA	XXX
73110		A	X-ray exam of wrist	0.17	0.59	0.61	0.59	0.61	0.03	0.79	0.81	0.79	0.81	XXX
73110	26	A	X-ray exam of wrist	0.17	0.06	0.07	0.06	0.07	0.01	0.24	0.25	0.24	0.25	XXX
73110	TC	A	X-ray exam of wrist	0.00	0.53	0.54	NA	NA	0.02	0.55	0.56	NA	NA	XXX
73115		A	Contrast x-ray of wrist	0.54	1.77	1.81	1.77	1.81	0.11	2.42	2.46	2.42	2.46	XXX
73115	26	A	Contrast x-ray of wrist	0.54	0.20	0.22	0.20	0.22	0.03	0.77	0.79	0.77	0.79	XXX
73115	TC	A	Contrast x-ray of wrist	0.00	1.57	1.59	NA	NA	0.08	1.65	1.67	NA	NA	XXX
73120		A	X-ray exam of hand	0.16	0.55	0.57	0.55	0.57	0.03	0.74	0.76	0.74	0.76	XXX
73120	26	A	X-ray exam of hand	0.16	0.06	0.07	0.06	0.07	0.01	0.23	0.24	0.23	0.24	XXX
73120	TC	A	X-ray exam of hand	0.00	0.49	0.50	NA	NA	0.02	0.51	0.52	NA	NA	XXX
73130		A	X-ray exam of hand	0.17	0.59	0.61	0.59	0.61	0.03	0.79	0.81	0.79	0.81	XXX
73130	26	A	X-ray exam of hand	0.17	0.06	0.07	0.06	0.07	0.01	0.24	0.25	0.24	0.25	XXX
73130	TC	A	X-ray exam of hand	0.00	0.53	0.54	NA	NA	0.02	0.55	0.56	NA	NA	XXX

[1] CPT codes and descriptions only are copyright 2000 American Medical Association. All Rights Reserved. Applicable FARS/DFARS Apply.
[2] Copyright 1994 American Dental Association. All rights reserved.
[3] + Indicates RVUs are not used for Medicare payment.
[4] PE RVUs = Practice Expense Relative Value Units.

ADDENDUM B.—RELATIVE VALUE UNITS (RVU'S) AND RELATED INFORMATION—Continued

CPT[1]/ HCPCS[2]	MOD	Status	Description	Physician Work RVUs[3]	Fully Implemented Non-Facility PE RVUs	Year 2001 Transitional Non-Facility PE RVUs	Fully Implemented Facility PE RVUs	Year 2001 Transitional Facility PE RVUs	Mal-Practice RVUs	Fully Implemented Non-Facility Total	Year 2001 Transitional Non-Facility Total	Fully Implemented Facility Total	Year 2001 Transitional Facility Total	Global
73140		A	X-ray exam of finger(s)	0.13	0.46	0.48	0.46	0.48	0.03	0.62	0.64	0.62	0.64	XXX
73140	26	A	X-ray exam of finger(s)	0.13	0.05	0.06	0.05	0.06	0.01	0.19	0.20	0.19	0.20	XXX
73140	TC	A	X-ray exam of finger(s)	0.00	0.41	0.42	NA	NA	0.02	0.43	0.44	NA	NA	XXX
73200		A	Ct upper extremity w/o dye	1.09	5.32	5.40	5.32	5.40	0.26	6.67	6.75	6.67	6.75	XXX
73200	26	A	Ct upper extremity w/o dye	1.09	0.39	0.42	0.39	0.42	0.05	1.53	1.56	1.53	1.56	XXX
73200	TC	A	Ct upper extremity w/o dye	0.00	4.93	4.98	NA	NA	0.21	5.14	5.19	NA	NA	XXX
73201		A	Ct upper extremity w/dye	1.16	6.27	6.37	6.27	6.37	0.31	7.74	7.84	7.74	7.84	XXX
73201	26	A	Ct upper extremity w/dye	1.16	0.41	0.45	0.41	0.45	0.05	1.62	1.66	1.62	1.66	XXX
73201	TC	A	Ct upper extremity w/dye	0.00	5.86	5.92	NA	NA	0.26	6.12	6.18	NA	NA	XXX
73202		A	Ct uppr extremity w/o&w dye	1.22	7.81	7.93	7.81	7.93	0.38	9.41	9.53	9.41	9.53	XXX
73202	26	A	Ct uppr extremity w/o&w dye	1.22	0.44	0.48	0.44	0.48	0.06	1.72	1.76	1.72	1.76	XXX
73202	TC	A	Ct uppr extremity w/o&w dye	0.00	7.37	7.45	NA	NA	0.32	7.69	7.77	NA	NA	XXX
73206		A	Ct angio upr extrm w/o&w dye	1.20	7.85	7.85	7.85	7.85	0.37	9.42	9.42	9.42	9.42	XXX
73206	26	A	Ct angio upr extrm w/o&w dye	1.20	0.48	0.48	0.48	0.48	0.05	1.73	1.73	1.73	1.73	XXX
73206	TC	A	Ct angio upr extrm w/o&w dye	0.00	7.37	7.37	NA	NA	0.32	7.69	7.69	NA	NA	XXX
73218		A	Mri upper extremity w/o dye	0.98	11.48	11.48	11.48	11.48	0.36	12.82	12.82	12.82	12.82	XXX
73218	26	A	Mri upper extremity w/o dye	0.98	0.35	0.35	0.35	0.35	0.04	1.37	1.37	1.37	1.37	XXX
73218	TC	A	Mri upper extremity w/o dye	0.00	11.13	11.13	NA	NA	0.32	11.45	11.45	NA	NA	XXX
73219		A	Mri upper extremity w/dye	1.17	13.76	13.76	13.76	13.76	0.43	15.36	15.36	15.36	15.36	XXX
73219	26	A	Mri upper extremity w/dye	1.17	0.42	0.42	0.42	0.42	0.04	1.63	1.63	1.63	1.63	XXX
73219	TC	A	Mri upper extremity w/dye	0.00	13.34	13.34	NA	NA	0.39	13.73	13.73	NA	NA	XXX
73220		A	Mri uppr extremity w/o&w dye	1.56	25.27	22.03	25.27	22.03	0.78	27.61	24.37	27.61	24.37	XXX
73220	26	A	Mri uppr extremity w/o&w dye	1.56	0.56	0.60	0.56	0.60	0.08	2.20	2.24	2.20	2.24	XXX
73220	TC	A	Mri uppr extremity w/o&w dye	0.00	24.71	21.43	NA	NA	0.70	25.41	22.13	NA	NA	XXX
73221		A	Mri joint upr extrem w/o dye	0.98	11.48	11.63	11.48	11.63	0.36	12.82	12.97	12.82	12.97	XXX
73221	26	A	Mri joint upr extrem w/o dye	0.98	0.35	0.38	0.35	0.38	0.04	1.37	1.40	1.37	1.40	XXX
73221	TC	A	Mri joint upr extrem w/o dye	0.00	11.13	11.25	NA	NA	0.32	11.45	11.57	NA	NA	XXX
73222		A	Mri joint upr extrem w/ dye	1.17	13.76	13.76	13.76	13.76	0.43	15.36	15.36	15.36	15.36	XXX
73222	26	A	Mri joint upr extrem w/ dye	1.17	0.42	0.42	0.42	0.42	0.04	1.63	1.63	1.63	1.63	XXX
73222	TC	A	Mri joint upr extrem w/ dye	0.00	13.34	13.34	NA	NA	0.39	13.73	13.73	NA	NA	XXX
73223		A	Mri joint upr extr w/o&w dye	1.56	25.27	25.27	25.27	25.27	0.78	27.61	27.61	27.61	27.61	XXX
73223	26	A	Mri joint upr extr w/o&w dye	1.56	0.56	0.56	0.56	0.56	0.08	2.20	2.20	2.20	2.20	XXX
73223	TC	A	Mri joint upr extr w/o&w dye	0.00	24.71	24.71	NA	NA	0.70	25.41	25.41	NA	NA	XXX
73225		N	Mr angio upr extr w/o&w dye	+1.73	11.82	11.95	11.82	11.95	0.57	14.12	14.25	14.12	14.25	XXX
73225	26	N	Mr angio upr extr w/o&w dye	+1.73	0.69	0.70	0.69	0.70	0.08	2.50	2.51	2.50	2.51	XXX
73225	TC	N	Mr angio upr extr w/o&w dye	+0.00	11.13	11.25	NA	NA	0.49	11.62	11.74	NA	NA	XXX
73500		A	X-ray exam of hip	0.17	0.53	0.55	0.53	0.55	0.03	0.73	0.75	0.73	0.75	XXX
73500	26	A	X-ray exam of hip	0.17	0.06	0.07	0.06	0.07	0.01	0.24	0.25	0.24	0.25	XXX
73500	TC	A	X-ray exam of hip	0.00	0.47	0.48	NA	NA	0.02	0.49	0.50	NA	NA	XXX
73510		A	X-ray exam of hip	0.21	0.65	0.67	0.65	0.67	0.05	0.91	0.93	0.91	0.93	XXX
73510	26	A	X-ray exam of hip	0.21	0.08	0.09	0.08	0.09	0.02	0.31	0.32	0.31	0.32	XXX
73510	TC	A	X-ray exam of hip	0.00	0.57	0.58	NA	NA	0.03	0.60	0.61	NA	NA	XXX
73520		A	X-ray exam of hips	0.26	0.75	0.77	0.75	0.77	0.05	1.06	1.08	1.06	1.08	XXX
73520	26	A	X-ray exam of hips	0.26	0.09	0.10	0.09	0.10	0.02	0.37	0.38	0.37	0.38	XXX
73520	TC	A	X-ray exam of hips	0.00	0.66	0.67	NA	NA	0.03	0.69	0.70	NA	NA	XXX
73525		A	Contrast x-ray of hip	0.54	2.27	2.31	2.27	2.31	0.13	2.94	2.98	2.94	2.98	XXX
73525	26	A	Contrast x-ray of hip	0.54	0.19	0.21	0.19	0.21	0.03	0.76	0.78	0.76	0.78	XXX
73525	TC	A	Contrast x-ray of hip	0.00	2.08	2.10	NA	NA	0.10	2.18	2.20	NA	NA	XXX
73530		A	X-ray exam of hip	0.29	0.62	0.64	0.62	0.64	0.03	0.94	0.96	0.94	0.96	XXX
73530	26	A	X-ray exam of hip	0.29	0.10	0.11	0.10	0.11	0.01	0.40	0.41	0.40	0.41	XXX
73530	TC	A	X-ray exam of hip	0.00	0.52	0.53	NA	NA	0.02	0.54	0.55	NA	NA	XXX
73540		A	X-ray exam of pelvis & hips	0.20	0.64	0.66	0.64	0.66	0.05	0.89	0.91	0.89	0.91	XXX
73540	26	A	X-ray exam of pelvis & hips	0.20	0.07	0.08	0.07	0.08	0.02	0.29	0.30	0.29	0.30	XXX
73540	TC	A	X-ray exam of pelvis & hips	0.00	0.57	0.58	NA	NA	0.03	0.60	0.61	NA	NA	XXX
73542		A	X-ray exam, sacroiliac joint	0.59	2.29	2.29	2.29	2.29	0.13	3.01	3.01	3.01	3.01	XXX
73542	26	A	X-ray exam, sacroiliac joint	0.59	0.21	0.21	0.21	0.21	0.03	0.83	0.83	0.83	0.83	XXX
73542	TC	A	X-ray exam, sacroiliac joint	0.00	2.08	2.08	NA	NA	0.10	2.18	2.18	NA	NA	XXX
73550		A	X-ray exam of thigh	0.17	0.63	0.65	0.63	0.65	0.04	0.84	0.86	0.84	0.86	XXX
73550	26	A	X-ray exam of thigh	0.17	0.06	0.07	0.06	0.07	0.01	0.24	0.25	0.24	0.25	XXX
73550	TC	A	X-ray exam of thigh	0.00	0.57	0.58	NA	NA	0.03	0.60	0.61	NA	NA	XXX
73560		A	X-ray exam of knee, 1 or 2	0.17	0.58	0.60	0.58	0.60	0.04	0.79	0.81	0.79	0.81	XXX
73560	26	A	X-ray exam of knee, 1 or 2	0.17	0.06	0.07	0.06	0.07	0.02	0.25	0.26	0.25	0.26	XXX
73560	TC	A	X-ray exam of knee, 1 or 2	0.00	0.52	0.53	NA	NA	0.02	0.54	0.55	NA	NA	XXX
73562		A	X-ray exam of knee, 3	0.18	0.64	0.66	0.64	0.66	0.05	0.87	0.89	0.87	0.89	XXX
73562	26	A	X-ray exam of knee, 3	0.18	0.07	0.08	0.07	0.08	0.02	0.27	0.28	0.27	0.28	XXX
73562	TC	A	X-ray exam of knee, 3	0.00	0.57	0.58	NA	NA	0.03	0.60	0.61	NA	NA	XXX
73564		A	X-ray exam, knee, 4 or more	0.22	0.69	0.71	0.69	0.71	0.05	0.96	0.98	0.96	0.98	XXX
73564	26	A	X-ray exam, knee, 4 or more	0.22	0.08	0.09	0.08	0.09	0.02	0.32	0.33	0.32	0.33	XXX
73564	TC	A	X-ray exam, knee, 4 or more	0.00	0.61	0.62	NA	NA	0.03	0.64	0.65	NA	NA	XXX
73565		A	X-ray exam of knees	0.17	0.56	0.57	0.56	0.57	0.04	0.77	0.78	0.77	0.78	XXX
73565	26	A	X-ray exam of knees	0.17	0.07	0.07	0.07	0.07	0.02	0.26	0.26	0.26	0.26	XXX
73565	TC	A	X-ray exam of knees	0.00	0.49	0.50	NA	NA	0.02	0.51	0.52	NA	NA	XXX
73580		A	Contrast x-ray of knee joint	0.54	2.79	2.84	2.79	2.84	0.15	3.48	3.53	3.48	3.53	XXX
73580	26	A	Contrast x-ray of knee joint	0.54	0.19	0.21	0.19	0.21	0.03	0.76	0.78	0.76	0.78	XXX
73580	TC	A	Contrast x-ray of knee joint	0.00	2.60	2.63	NA	NA	0.12	2.72	2.75	NA	NA	XXX
73590		A	X-ray exam of lower leg	0.17	0.58	0.60	0.58	0.60	0.03	0.78	0.80	0.78	0.80	XXX
73590	26	A	X-ray exam of lower leg	0.17	0.06	0.07	0.06	0.07	0.01	0.24	0.25	0.24	0.25	XXX
73590	TC	A	X-ray exam of lower leg	0.00	0.52	0.53	NA	NA	0.02	0.54	0.55	NA	NA	XXX
73592		A	X-ray exam of leg, infant	0.16	0.55	0.57	0.55	0.57	0.03	0.74	0.76	0.74	0.76	XXX
73592	26	A	X-ray exam of leg, infant	0.16	0.06	0.07	0.06	0.07	0.01	0.23	0.24	0.23	0.24	XXX
73592	TC	A	X-ray exam of leg, infant	0.00	0.49	0.50	NA	NA	0.02	0.51	0.52	NA	NA	XXX
73600		A	X-ray exam of ankle	0.16	0.55	0.57	0.55	0.57	0.03	0.74	0.76	0.74	0.76	XXX
73600	26	A	X-ray exam of ankle	0.16	0.06	0.07	0.06	0.07	0.01	0.23	0.24	0.23	0.24	XXX

[1] CPT codes and descriptions only are copyright 2000 American Medical Association. All Rights Reserved. Applicable FARS/DFARS Apply.
[2] Copyright 1994 American Dental Association. All rights reserved.
[3] + Indicates RVUs are not used for Medicare payment.
[4] PE RVUs = Practice Expense Relative Value Units.

ADDENDUM B.—RELATIVE VALUE UNITS (RVU'S) AND RELATED INFORMATION—Continued

CPT[1]/ HCPCS[2]	MOD	Status	Description	Physician Work RVUs[3]	Fully Implemented Non-Facility PE RVUs	Year 2001 Transitional Non-Facility PE RVUs	Fully Implemented Facility PE RVUs	Year 2001 Transitional Facility PE RVUs	Mal-Practice RVUs	Fully Implemented Non-Facility Total	Year 2001 Transitional Non-Facility Total	Fully Implemented Facility Total	Year 2001 Transitional Facility Total	Global
73600	TC	A	X-ray exam of ankle	0.00	0.49	0.50	NA	NA	0.02	0.51	0.52	NA	NA	XXX
73610	.....	A	X-ray exam of ankle	0.17	0.59	0.61	0.59	0.61	0.03	0.79	0.81	0.79	0.81	XXX
73610	26	A	X-ray exam of ankle	0.17	0.06	0.07	0.06	0.07	0.01	0.24	0.25	0.24	0.25	XXX
73610	TC	A	X-ray exam of ankle	0.00	0.53	0.54	NA	NA	0.02	0.55	0.56	NA	NA	XXX
73615	.....	A	Contrast x-ray of ankle	0.54	2.28	2.32	2.28	2.32	0.13	2.95	2.99	2.95	2.99	XXX
73615	26	A	Contrast x-ray of ankle	0.54	0.20	0.22	0.20	0.22	0.03	0.77	0.79	0.77	0.79	XXX
73615	TC	A	Contrast x-ray of ankle	0.00	2.08	2.10	NA	NA	0.10	2.18	2.20	NA	NA	XXX
73620	.....	A	X-ray exam of foot	0.16	0.55	0.57	0.55	0.57	0.03	0.74	0.76	0.74	0.76	XXX
73620	26	A	X-ray exam of foot	0.16	0.06	0.07	0.06	0.07	0.01	0.23	0.24	0.23	0.24	XXX
73620	TC	A	X-ray exam of foot	0.00	0.49	0.50	NA	NA	0.02	0.51	0.52	NA	NA	XXX
73630	.....	A	X-ray exam of foot	0.17	0.59	0.61	0.59	0.61	0.03	0.79	0.81	0.79	0.81	XXX
73630	26	A	X-ray exam of foot	0.17	0.06	0.07	0.06	0.07	0.01	0.24	0.25	0.24	0.25	XXX
73630	TC	A	X-ray exam of foot	0.00	0.53	0.54	NA	NA	0.02	0.55	0.56	NA	NA	XXX
73650	.....	A	X-ray exam of heel	0.16	0.53	0.55	0.53	0.55	0.03	0.72	0.74	0.72	0.74	XXX
73650	26	A	X-ray exam of heel	0.16	0.06	0.07	0.06	0.07	0.01	0.23	0.24	0.23	0.24	XXX
73650	TC	A	X-ray exam of heel	0.00	0.47	0.48	NA	NA	0.02	0.49	0.50	NA	NA	XXX
73660	.....	A	X-ray exam of toe(s)	0.13	0.46	0.48	0.46	0.48	0.03	0.62	0.64	0.62	0.64	XXX
73660	26	A	X-ray exam of toe(s)	0.13	0.05	0.06	0.05	0.06	0.01	0.19	0.20	0.19	0.20	XXX
73660	TC	A	X-ray exam of toe(s)	0.00	0.41	0.42	NA	NA	0.02	0.43	0.44	NA	NA	XXX
73700	.....	A	Ct lower extremity w/o dye	1.09	5.32	5.40	5.32	5.40	0.26	6.67	6.75	6.67	6.75	XXX
73700	26	A	Ct lower extremity w/o dye	1.09	0.39	0.42	0.39	0.42	0.05	1.53	1.56	1.53	1.56	XXX
73700	TC	A	Ct lower extremity w/o dye	0.00	4.93	4.98	NA	NA	0.21	5.14	5.19	NA	NA	XXX
73701	.....	A	Ct lower extremity w/dye	1.16	6.27	6.37	6.27	6.37	0.31	7.74	7.84	7.74	7.84	XXX
73701	26	A	Ct lower extremity w/dye	1.16	0.41	0.45	0.41	0.45	0.05	1.62	1.66	1.62	1.66	XXX
73701	TC	A	Ct lower extremity w/dye	0.00	5.86	5.92	NA	NA	0.26	6.12	6.18	NA	NA	XXX
73702	.....	A	Ct lwr extremity w/o&w dye	1.22	7.80	7.92	7.80	7.92	0.37	9.39	9.51	9.39	9.51	XXX
73702	26	A	Ct lwr extremity w/o&w dye	1.22	0.43	0.47	0.43	0.47	0.05	1.70	1.74	1.70	1.74	XXX
73702	TC	A	Ct lwr extremity w/o&w dye	0.00	7.37	7.45	NA	NA	0.32	7.69	7.77	NA	NA	XXX
73706	.....	A	Ct angio lwr extr w/o&w dye	1.20	7.85	7.85	7.85	7.85	0.37	9.42	9.42	9.42	9.42	XXX
73706	26	A	Ct angio lwr extr w/o&w dye	1.20	0.48	0.48	0.48	0.48	0.05	1.73	1.73	1.73	1.73	XXX
73706	TC	A	Ct angio lwr extr w/o&w dye	0.00	7.37	7.37	NA	NA	0.32	7.69	7.69	NA	NA	XXX
73718	.....	A	Mri lower extremity w/o dye	0.98	11.48	11.48	11.48	11.48	0.36	12.82	12.82	12.82	12.82	XXX
73718	26	A	Mri lower extremity w/o dye	0.98	0.35	0.35	0.35	0.35	0.04	1.37	1.37	1.37	1.37	XXX
73718	TC	A	Mri lower extremity w/o dye	0.00	11.13	11.13	NA	NA	0.32	11.45	11.45	NA	NA	XXX
73719	.....	A	Mri lower extremity w/dye	1.17	13.76	13.76	13.76	13.76	0.43	15.36	15.36	15.36	15.36	XXX
73719	26	A	Mri lower extremity w/dye	1.17	0.42	0.42	0.42	0.42	0.04	1.63	1.63	1.63	1.63	XXX
73719	TC	A	Mri lower extremity w/dye	0.00	13.34	13.34	NA	NA	0.39	13.73	13.73	NA	NA	XXX
73720	.....	A	Mri lwr extremity w/o&w dye	1.56	25.26	22.02	25.26	22.02	0.78	27.60	24.36	27.60	24.36	XXX
73720	26	A	Mri lwr extremity w/o&w dye	1.56	0.55	0.59	0.55	0.59	0.08	2.19	2.23	2.19	2.23	XXX
73720	TC	A	Mri lwr extremity w/o&w dye	0.00	24.71	21.43	NA	NA	0.70	25.41	22.13	NA	NA	XXX
73721	.....	A	Mri joint of lwr extre w/o d	0.98	11.48	11.63	11.48	11.63	0.36	12.82	12.97	12.82	12.97	XXX
73721	26	A	Mri joint of lwr extre w/o d	0.98	0.35	0.38	0.35	0.38	0.04	1.37	1.40	1.37	1.40	XXX
73721	TC	A	Mri joint of lwr extre w/o d	0.00	11.13	11.25	NA	NA	0.32	11.45	11.57	NA	NA	XXX
73722	.....	A	Mri joint of lwr extr w/dye	1.17	13.76	13.76	13.76	13.76	0.43	15.36	15.36	15.36	15.36	XXX
73722	26	A	Mri joint of lwr extr w/dye	1.17	0.42	0.42	0.42	0.42	0.04	1.63	1.63	1.63	1.63	XXX
73722	TC	A	Mri joint of lwr extr w/dye	0.00	13.34	13.34	NA	NA	0.39	13.73	13.73	NA	NA	XXX
73723	.....	A	Mri joint lwr extr w/o&w dye	1.56	25.27	25.27	25.27	25.27	0.78	27.61	27.61	27.61	27.61	XXX
73723	26	A	Mri joint lwr extr w/o&w dye	1.56	0.56	0.56	0.56	0.56	0.08	2.20	2.20	2.20	2.20	XXX
73723	TC	A	Mri joint lwr extr w/o&w dye	0.00	24.71	24.71	NA	NA	0.70	25.41	25.41	NA	NA	XXX
73725	.....	R	Mr ang lwr ext w or w/o dye	1.82	11.78	11.92	11.78	11.92	0.57	14.17	14.31	14.17	14.31	XXX
73725	26	R	Mr ang lwr ext w or w/o dye	1.82	0.65	0.67	0.65	0.67	0.08	2.55	2.57	2.55	2.57	XXX
73725	TC	R	Mr ang lwr ext w or w/o dye	0.00	11.13	11.25	NA	NA	0.49	11.62	11.74	NA	NA	XXX
74000	.....	A	X-ray exam of abdomen	0.18	0.58	0.60	0.58	0.60	0.03	0.79	0.81	0.79	0.81	XXX
74000	26	A	X-ray exam of abdomen	0.18	0.06	0.07	0.06	0.07	0.01	0.25	0.26	0.25	0.26	XXX
74000	TC	A	X-ray exam of abdomen	0.00	0.52	0.53	NA	NA	0.02	0.54	0.55	NA	NA	XXX
74010	.....	A	X-ray exam of abdomen	0.23	0.65	0.67	0.65	0.67	0.04	0.92	0.94	0.92	0.94	XXX
74010	26	A	X-ray exam of abdomen	0.23	0.08	0.09	0.08	0.09	0.01	0.32	0.33	0.32	0.33	XXX
74010	TC	A	X-ray exam of abdomen	0.00	0.57	0.58	NA	NA	0.03	0.60	0.61	NA	NA	XXX
74020	.....	A	X-ray exam of abdomen	0.27	0.71	0.73	0.71	0.73	0.04	1.02	1.04	1.02	1.04	XXX
74020	26	A	X-ray exam of abdomen	0.27	0.10	0.11	0.10	0.11	0.01	0.38	0.39	0.38	0.39	XXX
74020	TC	A	X-ray exam of abdomen	0.00	0.61	0.62	NA	NA	0.03	0.64	0.65	NA	NA	XXX
74022	.....	A	X-ray exam series, abdomen	0.32	0.84	0.86	0.84	0.86	0.05	1.21	1.23	1.21	1.23	XXX
74022	26	A	X-ray exam series, abdomen	0.32	0.11	0.12	0.11	0.12	0.01	0.44	0.45	0.44	0.45	XXX
74022	TC	A	X-ray exam series, abdomen	0.00	0.73	0.74	NA	NA	0.04	0.77	0.78	NA	NA	XXX
74150	.....	A	Ct abdomen w/o dye	1.19	6.03	6.13	6.03	6.13	0.30	7.52	7.62	7.52	7.62	XXX
74150	26	A	Ct abdomen w/o dye	1.19	0.42	0.46	0.42	0.46	0.05	1.66	1.70	1.66	1.70	XXX
74150	TC	A	Ct abdomen w/o dye	0.00	5.61	5.67	NA	NA	0.25	5.86	5.92	NA	NA	XXX
74160	.....	A	Ct abdomen w/dye	1.27	7.24	7.35	7.24	7.35	0.36	8.87	8.98	8.87	8.98	XXX
74160	26	A	Ct abdomen w/dye	1.27	0.45	0.49	0.45	0.49	0.06	1.78	1.82	1.78	1.82	XXX
74160	TC	A	Ct abdomen w/dye	0.00	6.79	6.86	NA	NA	0.30	7.09	7.16	NA	NA	XXX
74170	.....	A	Ct abdomen w/o&w dye	1.40	8.93	9.06	8.93	9.06	0.42	10.75	10.88	10.75	10.88	XXX
74170	26	A	Ct abdomen w/o&w dye	1.40	0.50	0.54	0.50	0.54	0.06	1.96	2.00	1.96	2.00	XXX
74170	TC	A	Ct abdomen w/o&w dye	0.00	8.43	8.52	NA	NA	0.36	8.79	8.88	NA	NA	XXX
74175	.....	A	Ct angio abdom w/o&w dye	1.20	8.91	8.91	8.91	8.91	0.37	10.48	10.48	10.48	10.48	XXX
74175	26	A	Ct angio abdom w/o&w dye	1.20	0.48	0.48	0.48	0.48	0.05	1.73	1.73	1.73	1.73	XXX
74175	TC	A	Ct angio abdom w/o&w dye	0.00	8.43	8.43	NA	NA	0.32	8.75	8.75	NA	NA	XXX
74181	.....	A	Mri abdomen w/o dye	1.10	11.52	11.74	11.52	11.74	0.41	13.03	13.25	13.03	13.25	XXX
74181	26	A	Mri abdomen w/o dye	1.10	0.39	0.49	0.39	0.49	0.04	1.53	1.63	1.53	1.63	XXX
74181	TC	A	Mri abdomen w/o dye	0.00	11.13	11.25	NA	NA	0.37	11.50	11.62	NA	NA	XXX
74182	.....	A	Mri abdomen w/dye	1.30	13.80	13.80	13.80	13.80	0.48	15.58	15.58	15.58	15.58	XXX
74182	26	A	Mri abdomen w/dye	1.30	0.46	0.46	0.46	0.46	0.05	1.81	1.81	1.81	1.81	XXX
74182	TC	A	Mri abdomen w/dye	0.00	13.34	13.34	NA	NA	0.43	13.77	13.77	NA	NA	XXX
74183	.....	A	Mri abdomen w/o&w dye	1.70	25.31	25.31	25.31	25.31	0.85	27.86	27.86	27.86	27.86	XXX

[1] CPT codes and descriptions only are copyright 2000 American Medical Association. All Rights Reserved. Applicable FARS/DFARS Apply.
[2] Copyright 1994 American Dental Association. All rights reserved.
[3] + Indicates RVUs are not used for Medicare payment.
[4] PE RVUs = Practice Expense Relative Value Units.

ADDENDUM B.—RELATIVE VALUE UNITS (RVU'S) AND RELATED INFORMATION—Continued

CPT[1]/ HCPCS[2]	MOD	Status	Description	Physician Work RVUs[3]	Fully Implemented Non-Facility PE RVUs	Year 2001 Transitional Non-Facility PE RVUs	Fully Implemented Facility PE RVUs	Year 2001 Transitional Facility PE RVUs	Mal-Practice RVUs	Fully Implemented Non-Facility Total	Year 2001 Transitional Non-Facility Total	Fully Implemented Facility Total	Year 2001 Transitional Facility Total	Global
74183	26	A	Mri abdomen w/o&w dye	1.70	0.60	0.60	0.60	0.60	0.09	2.39	2.39	2.39	2.39	XXX
74183	TC	A	Mri abdomen w/o&w dye	0.00	24.71	24.71	NA	NA	0.76	25.47	25.47	NA	NA	XXX
74185		R	Mri angio, abdom w or w/o dy	1.80	11.77	11.93	11.77	11.93	0.57	14.14	14.30	14.14	14.30	XXX
74185	26	R	Mri angio, abdom w or w/o dy	1.80	0.64	0.68	0.64	0.68	0.08	2.52	2.56	2.52	2.56	XXX
74185	TC	R	Mri angio, abdom w or w/o dy	0.00	11.13	11.25	NA	NA	0.49	11.62	11.74	NA	NA	XXX
74190		A	X-ray exam of peritoneum	0.48	1.47	1.47	1.47	1.47	0.08	2.03	2.03	2.03	2.03	XXX
74190	26	A	X-ray exam of peritoneum	0.48	0.17	0.16	0.17	0.16	0.02	0.67	0.66	0.67	0.66	XXX
74190	TC	A	X-ray exam of peritoneum	0.00	1.30	1.31	NA	NA	0.06	1.36	1.37	NA	NA	XXX
74210		A	Contrst x-ray exam of throat	0.36	1.31	1.33	1.31	1.33	0.07	1.74	1.76	1.74	1.76	XXX
74210	26	A	Contrst x-ray exam of throat	0.36	0.13	0.14	0.13	0.14	0.02	0.51	0.52	0.51	0.52	XXX
74210	TC	A	Contrst x-ray exam of throat	0.00	1.18	1.19	NA	NA	0.05	1.23	1.24	NA	NA	XXX
74220		A	Contrast x-ray, esophagus	0.46	1.34	1.37	1.34	1.37	0.07	1.87	1.90	1.87	1.90	XXX
74220	26	A	Contrast x-ray, esophagus	0.46	0.16	0.18	0.16	0.18	0.02	0.64	0.66	0.64	0.66	XXX
74220	TC	A	Contrast x-ray, esophagus	0.00	1.18	1.19	NA	NA	0.05	1.23	1.24	NA	NA	XXX
74230		A	Cinema x-ray, throat/esoph	0.53	1.49	1.52	1.49	1.52	0.08	2.10	2.13	2.10	2.13	XXX
74230	26	A	Cinema x-ray, throat/esoph	0.53	0.19	0.21	0.19	0.21	0.02	0.74	0.76	0.74	0.76	XXX
74230	TC	A	Cinema x-ray, throat/esoph	0.00	1.30	1.31	NA	NA	0.06	1.36	1.37	NA	NA	XXX
74235		A	Remove esophagus obstruction	1.19	3.02	3.09	3.02	3.09	0.17	4.38	4.45	4.38	4.45	XXX
74235	26	A	Remove esophagus obstruction	1.19	0.42	0.46	0.42	0.46	0.05	1.66	1.70	1.66	1.70	XXX
74235	TC	A	Remove esophagus obstruction	0.00	2.60	2.63	NA	NA	0.12	2.72	2.75	NA	NA	XXX
74240		A	X-ray exam, upper gi tract	0.69	1.69	1.74	1.69	1.74	0.10	2.48	2.53	2.48	2.53	XXX
74240	26	A	X-ray exam, upper gi tract	0.69	0.24	0.27	0.24	0.27	0.03	0.96	0.99	0.96	0.99	XXX
74240	TC	A	X-ray exam, upper gi tract	0.00	1.45	1.47	NA	NA	0.07	1.52	1.54	NA	NA	XXX
74241		A	X-ray exam, upper gi tract	0.69	1.72	1.77	1.72	1.77	0.10	2.51	2.56	2.51	2.56	XXX
74241	26	A	X-ray exam, upper gi tract	0.69	0.24	0.27	0.24	0.27	0.03	0.96	0.99	0.96	0.99	XXX
74241	TC	A	X-ray exam, upper gi tract	0.00	1.48	1.50	NA	NA	0.07	1.55	1.57	NA	NA	XXX
74245		A	X-ray exam, upper gi tract	0.91	2.68	2.74	2.68	2.74	0.15	3.74	3.80	3.74	3.80	XXX
74245	26	A	X-ray exam, upper gi tract	0.91	0.32	0.35	0.32	0.35	0.04	1.27	1.30	1.27	1.30	XXX
74245	TC	A	X-ray exam, upper gi tract	0.00	2.36	2.39	NA	NA	0.11	2.47	2.50	NA	NA	XXX
74246		A	Contrst x-ray uppr gi tract	0.69	1.87	1.92	1.87	1.92	0.11	2.67	2.72	2.67	2.72	XXX
74246	26	A	Contrst x-ray uppr gi tract	0.69	0.24	0.27	0.24	0.27	0.03	0.96	0.99	0.96	0.99	XXX
74246	TC	A	Contrst x-ray uppr gi tract	0.00	1.63	1.65	NA	NA	0.08	1.71	1.73	NA	NA	XXX
74247		A	Contrst x-ray uppr gi tract	0.69	1.92	1.97	1.92	1.97	0.12	2.73	2.78	2.73	2.78	XXX
74247	26	A	Contrst x-ray uppr gi tract	0.69	0.25	0.28	0.25	0.28	0.03	0.97	1.00	0.97	1.00	XXX
74247	TC	A	Contrst x-ray uppr gi tract	0.00	1.67	1.69	NA	NA	0.09	1.76	1.78	NA	NA	XXX
74249		A	Contrst x-ray uppr gi tract	0.91	2.88	2.94	2.88	2.94	0.16	3.95	4.01	3.95	4.01	XXX
74249	26	A	Contrst x-ray uppr gi tract	0.91	0.32	0.35	0.32	0.35	0.04	1.27	1.30	1.27	1.30	XXX
74249	TC	A	Contrst x-ray uppr gi tract	0.00	2.56	2.59	NA	NA	0.12	2.68	2.71	NA	NA	XXX
74250		A	X-ray exam of small bowel	0.47	1.47	1.50	1.47	1.50	0.08	2.02	2.05	2.02	2.05	XXX
74250	26	A	X-ray exam of small bowel	0.47	0.17	0.19	0.17	0.19	0.02	0.66	0.68	0.66	0.68	XXX
74250	TC	A	X-ray exam of small bowel	0.00	1.30	1.31	NA	NA	0.06	1.36	1.37	NA	NA	XXX
74251		A	X-ray exam of small bowel	0.69	1.54	1.55	1.54	1.55	0.09	2.32	2.33	2.32	2.33	XXX
74251	26	A	X-ray exam of small bowel	0.69	0.24	0.24	0.24	0.24	0.03	0.96	0.96	0.96	0.96	XXX
74251	TC	A	X-ray exam of small bowel	0.00	1.30	1.31	NA	NA	0.06	1.36	1.37	NA	NA	XXX
74260		A	X-ray exam of small bowel	0.50	1.66	1.70	1.66	1.70	0.09	2.25	2.29	2.25	2.29	XXX
74260	26	A	X-ray exam of small bowel	0.50	0.18	0.20	0.18	0.20	0.02	0.70	0.72	0.70	0.72	XXX
74260	TC	A	X-ray exam of small bowel	0.00	1.48	1.50	NA	NA	0.07	1.55	1.57	NA	NA	XXX
74270		A	Contrast x-ray exam of colon	0.69	1.93	1.98	1.93	1.98	0.12	2.74	2.79	2.74	2.79	XXX
74270	26	A	Contrast x-ray exam of colon	0.69	0.24	0.27	0.24	0.27	0.03	0.96	0.99	0.96	0.99	XXX
74270	TC	A	Contrast x-ray exam of colon	0.00	1.69	1.71	NA	NA	0.09	1.78	1.80	NA	NA	XXX
74280		A	Contrast x-ray exam of colon	0.99	2.57	2.63	2.57	2.63	0.15	3.71	3.77	3.71	3.77	XXX
74280	26	A	Contrast x-ray exam of colon	0.99	0.35	0.39	0.35	0.39	0.04	1.38	1.42	1.38	1.42	XXX
74280	TC	A	Contrast x-ray exam of colon	0.00	2.22	2.24	NA	NA	0.11	2.33	2.35	NA	NA	XXX
74283		A	Contrast x-ray exam of colon	2.02	3.27	3.37	3.27	3.37	0.21	5.50	5.60	5.50	5.60	XXX
74283	26	A	Contrast x-ray exam of colon	2.02	0.72	0.79	0.72	0.79	0.09	2.83	2.90	2.83	2.90	XXX
74283	TC	A	Contrast x-ray exam of colon	0.00	2.55	2.58	NA	NA	0.12	2.67	2.70	NA	NA	XXX
74290		A	Contrast x-ray, gallbladder	0.32	0.84	0.86	0.84	0.86	0.05	1.21	1.23	1.21	1.23	XXX
74290	26	A	Contrast x-ray, gallbladder	0.32	0.11	0.12	0.11	0.12	0.01	0.44	0.45	0.44	0.45	XXX
74290	TC	A	Contrast x-ray, gallbladder	0.00	0.73	0.74	NA	NA	0.04	0.77	0.78	NA	NA	XXX
74291		A	Contrast x-rays, gallbladder	0.20	0.48	0.50	0.48	0.50	0.03	0.71	0.73	0.71	0.73	XXX
74291	26	A	Contrast x-rays, gallbladder	0.20	0.07	0.08	0.07	0.08	0.01	0.28	0.29	0.28	0.29	XXX
74291	TC	A	Contrast x-rays, gallbladder	0.00	0.41	0.42	NA	NA	0.02	0.43	0.44	NA	NA	XXX
74300		C	X-ray bile ducts/pancreas	0.00	0.00	0.00	0.00	0.00	0.00	0.00	0.00	0.00	0.00	XXX
74300	26	A	X-ray bile ducts/pancreas	0.36	0.13	0.14	0.13	0.14	0.02	0.51	0.52	0.51	0.52	XXX
74300	TC	C	X-ray bile ducts/pancreas	0.00	0.00	0.00	0.00	0.00	0.00	0.00	0.00	0.00	0.00	XXX
74301		C	X-rays at surgery add-on	0.00	0.00	0.00	0.00	0.00	0.00	0.00	0.00	0.00	0.00	ZZZ
74301	26	A	X-rays at surgery add-on	0.21	0.07	0.08	0.07	0.08	0.01	0.29	0.30	0.29	0.30	ZZZ
74301	TC	C	X-rays at surgery add-on	0.00	0.00	0.00	0.00	0.00	0.00	0.00	0.00	0.00	0.00	ZZZ
74305		A	X-ray bile ducts/pancreas	0.42	0.93	0.96	0.93	0.96	0.06	1.41	1.44	1.41	1.44	XXX
74305	26	A	X-ray bile ducts/pancreas	0.42	0.15	0.17	0.15	0.17	0.02	0.59	0.61	0.59	0.61	XXX
74305	TC	A	X-ray bile ducts/pancreas	0.00	0.78	0.79	NA	NA	0.04	0.82	0.83	NA	NA	XXX
74320		A	Contrast x-ray of bile ducts	0.54	3.32	3.37	3.32	3.37	0.16	4.02	4.07	4.02	4.07	XXX
74320	26	A	Contrast x-ray of bile ducts	0.54	0.19	0.21	0.19	0.21	0.02	0.75	0.77	0.75	0.77	XXX
74320	TC	A	Contrast x-ray of bile ducts	0.00	3.13	3.16	NA	NA	0.14	3.27	3.30	NA	NA	XXX
74327		A	X-ray bile stone removal	0.70	2.00	2.05	2.00	2.05	0.12	2.82	2.87	2.82	2.87	XXX
74327	26	A	X-ray bile stone removal	0.70	0.25	0.28	0.25	0.28	0.03	0.98	1.01	0.98	1.01	XXX
74327	TC	A	X-ray bile stone removal	0.00	1.75	1.77	NA	NA	0.09	1.84	1.86	NA	NA	XXX
74328		A	Xray bile duct endoscopy	0.70	3.38	3.44	3.38	3.44	0.17	4.25	4.31	4.25	4.31	XXX
74328	26	A	Xray bile duct endoscopy	0.70	0.25	0.28	0.25	0.28	0.03	0.98	1.01	0.98	1.01	XXX
74328	TC	A	Xray bile duct endoscopy	0.00	3.13	3.16	NA	NA	0.14	3.27	3.30	NA	NA	XXX
74329		A	X-ray for pancreas endoscopy	0.70	3.38	3.44	3.38	3.44	0.17	4.25	4.31	4.25	4.31	XXX
74329	26	A	X-ray for pancreas endoscopy	0.70	0.25	0.28	0.25	0.28	0.03	0.98	1.01	0.98	1.01	XXX
74329	TC	A	X-ray for pancreas endoscopy	0.00	3.13	3.16	NA	NA	0.14	3.27	3.30	NA	NA	XXX

[1] CPT codes and descriptions only are copyright 2000 American Medical Association. All Rights Reserved. Applicable FARS/DFARS Apply.
[2] Copyright 1994 American Dental Association. All rights reserved.
[3] + Indicates RVUs are not used for Medicare payment.
[4] PE RVUs = Practice Expense Relative Value Units.

ADDENDUM B.—RELATIVE VALUE UNITS (RVU'S) AND RELATED INFORMATION—Continued

CPT[1]/ HCPCS[2]	MOD	Status	Description	Physician Work RVUs[3]	Fully Implemented Non-Facility PE RVUs	Year 2001 Transitional Non-Facility PE RVUs	Fully Implemented Facility PE RVUs	Year 2001 Transitional Facility PE RVUs	Mal-Practice RVUs	Fully Implemented Non-Facility Total	Year 2001 Transitional Non-Facility Total	Fully Implemented Facility Total	Year 2001 Transitional Facility Total	Global
74330		A	X-ray bile/panc endoscopy	0.90	3.45	3.49	3.45	3.49	0.18	4.53	4.57	4.53	4.57	XXX
74330	26	A	X-ray bile/panc endoscopy	0.90	0.32	0.33	0.32	0.33	0.04	1.26	1.27	1.26	1.27	XXX
74330	TC	A	X-ray bile/panc endoscopy	0.00	3.13	3.16	NA	NA	0.14	3.27	3.30	NA	NA	XXX
74340		A	X-ray guide for GI tube	0.54	2.79	2.84	2.79	2.84	0.14	3.47	3.52	3.47	3.52	XXX
74340	26	A	X-ray guide for GI tube	0.54	0.19	0.21	0.19	0.21	0.02	0.75	0.77	0.75	0.77	XXX
74340	TC	A	X-ray guide for GI tube	0.00	2.60	2.63	NA	NA	0.12	2.72	2.75	NA	NA	XXX
74350		A	X-ray guide, stomach tube	0.76	3.40	3.46	3.40	3.46	0.17	4.33	4.39	4.33	4.39	XXX
74350	26	A	X-ray guide, stomach tube	0.76	0.27	0.30	0.27	0.30	0.03	1.06	1.09	1.06	1.09	XXX
74350	TC	A	X-ray guide, stomach tube	0.00	3.13	3.16	NA	NA	0.14	3.27	3.30	NA	NA	XXX
74355		A	X-ray guide, intestinal tube	0.76	2.87	2.93	2.87	2.93	0.15	3.78	3.84	3.78	3.84	XXX
74355	26	A	X-ray guide, intestinal tube	0.76	0.27	0.30	0.27	0.30	0.03	1.06	1.09	1.06	1.09	XXX
74355	TC	A	X-ray guide, intestinal tube	0.00	2.60	2.63	NA	NA	0.12	2.72	2.75	NA	NA	XXX
74360		A	X-ray guide, GI dilation	0.54	3.32	3.37	3.32	3.37	0.16	4.02	4.07	4.02	4.07	XXX
74360	26	A	X-ray guide, GI dilation	0.54	0.19	0.21	0.19	0.21	0.02	0.75	0.77	0.75	0.77	XXX
74360	TC	A	X-ray guide, GI dilation	0.00	3.13	3.16	NA	NA	0.14	3.27	3.30	NA	NA	XXX
74363		A	X-ray, bile duct dilation	0.88	6.36	6.46	6.36	6.46	0.31	7.55	7.65	7.55	7.65	XXX
74363	26	A	X-ray, bile duct dilation	0.88	0.31	0.34	0.31	0.34	0.04	1.23	1.26	1.23	1.26	XXX
74363	TC	A	X-ray, bile duct dilation	0.00	6.05	6.12	NA	NA	0.27	6.32	6.39	NA	NA	XXX
74400		A	Contrst x-ray, urinary tract	0.49	1.84	1.88	1.84	1.88	0.11	2.44	2.48	2.44	2.48	XXX
74400	26	A	Contrst x-ray, urinary tract	0.49	0.17	0.19	0.17	0.19	0.02	0.68	0.70	0.68	0.70	XXX
74400	TC	A	Contrst x-ray, urinary tract	0.00	1.67	1.69	NA	NA	0.09	1.76	1.78	NA	NA	XXX
74410		A	Contrst x-ray, urinary tract	0.49	2.11	2.15	2.11	2.15	0.11	2.71	2.75	2.71	2.75	XXX
74410	26	A	Contrst x-ray, urinary tract	0.49	0.17	0.19	0.17	0.19	0.02	0.68	0.70	0.68	0.70	XXX
74410	TC	A	Contrst x-ray, urinary tract	0.00	1.94	1.96	NA	NA	0.09	2.03	2.05	NA	NA	XXX
74415		A	Contrst x-ray, urinary tract	0.49	2.27	2.31	2.27	2.31	0.12	2.88	2.92	2.88	2.92	XXX
74415	26	A	Contrst x-ray, urinary tract	0.49	0.17	0.19	0.17	0.19	0.02	0.68	0.70	0.68	0.70	XXX
74415	TC	A	Contrst x-ray, urinary tract	0.00	2.10	2.12	NA	NA	0.10	2.20	2.22	NA	NA	XXX
74420		A	Contrst x-ray, urinary tract	0.36	2.73	2.77	2.73	2.77	0.14	3.23	3.27	3.23	3.27	XXX
74420	26	A	Contrst x-ray, urinary tract	0.36	0.13	0.14	0.13	0.14	0.02	0.51	0.52	0.51	0.52	XXX
74420	TC	A	Contrst x-ray, urinary tract	0.00	2.60	2.63	NA	NA	0.12	2.72	2.75	NA	NA	XXX
74425		A	Contrst x-ray, urinary tract	0.36	1.43	1.45	1.43	1.45	0.08	1.87	1.89	1.87	1.89	XXX
74425	26	A	Contrst x-ray, urinary tract	0.36	0.13	0.14	0.13	0.14	0.02	0.51	0.52	0.51	0.52	XXX
74425	TC	A	Contrst x-ray, urinary tract	0.00	1.30	1.31	NA	NA	0.06	1.36	1.37	NA	NA	XXX
74430		A	Contrast x-ray, bladder	0.32	1.16	1.18	1.16	1.18	0.07	1.55	1.57	1.55	1.57	XXX
74430	26	A	Contrast x-ray, bladder	0.32	0.11	0.12	0.11	0.12	0.02	0.45	0.46	0.45	0.46	XXX
74430	TC	A	Contrast x-ray, bladder	0.00	1.05	1.06	NA	NA	0.05	1.10	1.11	NA	NA	XXX
74440		A	X-ray, male genital tract	0.38	1.25	1.27	1.25	1.27	0.07	1.70	1.72	1.70	1.72	XXX
74440	26	A	X-ray, male genital tract	0.38	0.13	0.14	0.13	0.14	0.02	0.53	0.54	0.53	0.54	XXX
74440	TC	A	X-ray, male genital tract	0.00	1.12	1.13	NA	NA	0.05	1.17	1.18	NA	NA	XXX
74445		A	X-ray exam of penis	1.14	1.52	1.57	1.52	1.57	0.10	2.76	2.81	2.76	2.81	XXX
74445	26	A	X-ray exam of penis	1.14	0.40	0.44	0.40	0.44	0.05	1.59	1.63	1.59	1.63	XXX
74445	TC	A	X-ray exam of penis	0.00	1.12	1.13	NA	NA	0.05	1.17	1.18	NA	NA	XXX
74450		A	X-ray, urethra/bladder	0.33	1.57	1.60	1.57	1.60	0.09	1.99	2.02	1.99	2.02	XXX
74450	26	A	X-ray, urethra/bladder	0.33	0.12	0.13	0.12	0.13	0.02	0.47	0.48	0.47	0.48	XXX
74450	TC	A	X-ray, urethra/bladder	0.00	1.45	1.47	NA	NA	0.07	1.52	1.54	NA	NA	XXX
74455		A	X-ray, urethra/bladder	0.33	1.69	1.72	1.69	1.72	0.10	2.12	2.15	2.12	2.15	XXX
74455	26	A	X-ray, urethra/bladder	0.33	0.12	0.13	0.12	0.13	0.02	0.47	0.48	0.47	0.48	XXX
74455	TC	A	X-ray, urethra/bladder	0.00	1.57	1.59	NA	NA	0.08	1.65	1.67	NA	NA	XXX
74470		A	X-ray exam of kidney lesion	0.54	1.43	1.46	1.43	1.46	0.08	2.05	2.08	2.05	2.08	XXX
74470	26	A	X-ray exam of kidney lesion	0.54	0.19	0.21	0.19	0.21	0.02	0.75	0.77	0.75	0.77	XXX
74470	TC	A	X-ray exam of kidney lesion	0.00	1.24	1.25	NA	NA	0.06	1.30	1.31	NA	NA	XXX
74475		A	X-ray control, cath insert	0.54	4.23	4.29	4.23	4.29	0.20	4.97	5.03	4.97	5.03	XXX
74475	26	A	X-ray control, cath insert	0.54	0.19	0.21	0.19	0.21	0.02	0.75	0.77	0.75	0.77	XXX
74475	TC	A	X-ray control, cath insert	0.00	4.04	4.08	NA	NA	0.18	4.22	4.26	NA	NA	XXX
74480		A	X-ray control, cath insert	0.54	4.23	4.29	4.23	4.29	0.20	4.97	5.03	4.97	5.03	XXX
74480	26	A	X-ray control, cath insert	0.54	0.19	0.21	0.19	0.21	0.02	0.75	0.77	0.75	0.77	XXX
74480	TC	A	X-ray control, cath insert	0.00	4.04	4.08	NA	NA	0.18	4.22	4.26	NA	NA	XXX
74485		A	X-ray guide, GU dilation	0.54	3.32	3.37	3.32	3.37	0.17	4.03	4.08	4.03	4.08	XXX
74485	26	A	X-ray guide, GU dilation	0.54	0.19	0.21	0.19	0.21	0.03	0.76	0.78	0.76	0.78	XXX
74485	TC	A	X-ray guide, GU dilation	0.00	3.13	3.16	NA	NA	0.14	3.27	3.30	NA	NA	XXX
74710		A	X-ray measurement of pelvis	0.34	1.17	1.19	1.17	1.19	0.07	1.58	1.60	1.58	1.60	XXX
74710	26	A	X-ray measurement of pelvis	0.34	0.12	0.13	0.12	0.13	0.02	0.48	0.49	0.48	0.49	XXX
74710	TC	A	X-ray measurement of pelvis	0.00	1.05	1.06	NA	NA	0.05	1.10	1.11	NA	NA	XXX
74740		A	X-ray, female genital tract	0.38	1.44	1.46	1.44	1.46	0.08	1.90	1.92	1.90	1.92	XXX
74740	26	A	X-ray, female genital tract	0.38	0.14	0.15	0.14	0.15	0.02	0.54	0.55	0.54	0.55	XXX
74740	TC	A	X-ray, female genital tract	0.00	1.30	1.31	NA	NA	0.06	1.36	1.37	NA	NA	XXX
74742		A	X-ray, fallopian tube	0.61	3.36	3.40	3.36	3.40	0.16	4.13	4.17	4.13	4.17	XXX
74742	26	A	X-ray, fallopian tube	0.61	0.23	0.24	0.23	0.24	0.02	0.86	0.87	0.86	0.87	XXX
74742	TC	A	X-ray, fallopian tube	0.00	3.13	3.16	NA	NA	0.14	3.27	3.30	NA	NA	XXX
74775		A	X-ray exam of perineum	0.62	1.67	1.71	1.67	1.71	0.10	2.39	2.43	2.39	2.43	XXX
74775	26	A	X-ray exam of perineum	0.62	0.22	0.24	0.22	0.24	0.03	0.87	0.89	0.87	0.89	XXX
74775	TC	A	X-ray exam of perineum	0.00	1.45	1.47	NA	NA	0.07	1.52	1.54	NA	NA	XXX
75552		A	Heart mri for morph w/o dye	1.60	11.70	11.87	11.70	11.87	0.56	13.86	14.03	13.86	14.03	XXX
75552	26	A	Heart mri for morph w/o dye	1.60	0.57	0.62	0.57	0.62	0.07	2.24	2.29	2.24	2.29	XXX
75552	TC	A	Heart mri for morph w/o dye	0.00	11.13	11.25	NA	NA	0.49	11.62	11.74	NA	NA	XXX
75553		A	Heart mri for morph w/dye	2.00	11.84	11.98	11.84	11.98	0.58	14.42	14.56	14.42	14.56	XXX
75553	26	A	Heart mri for morph w/dye	2.00	0.71	0.73	0.71	0.73	0.09	2.80	2.82	2.80	2.82	XXX
75553	TC	A	Heart mri for morph w/dye	0.00	11.13	11.25	NA	NA	0.49	11.62	11.74	NA	NA	XXX
75554		A	Cardiac MRI/function	1.83	11.84	11.98	11.84	11.98	0.56	14.23	14.37	14.23	14.37	XXX
75554	26	A	Cardiac MRI/function	1.83	0.71	0.73	0.71	0.73	0.07	2.61	2.63	2.61	2.63	XXX
75554	TC	A	Cardiac MRI/function	0.00	11.13	11.25	NA	NA	0.49	11.62	11.74	NA	NA	XXX
75555		A	Cardiac MRI/limited study	1.74	11.82	11.96	11.82	11.96	0.56	14.12	14.26	14.12	14.26	XXX
75555	26	A	Cardiac MRI/limited study	1.74	0.69	0.71	0.69	0.71	0.07	2.50	2.52	2.50	2.52	XXX

[1] CPT codes and descriptions only are copyright 2000 American Medical Association. All Rights Reserved. Applicable FARS/DFARS Apply.
[2] Copyright 1994 American Dental Association. All rights reserved.
[3] + Indicates RVUs are not used for Medicare payment.
[4] PE RVUs = Practice Expense Relative Value Units.

ADDENDUM B.—RELATIVE VALUE UNITS (RVU'S) AND RELATED INFORMATION—Continued

CPT[1]/ HCPCS[2]	MOD	Status	Description	Physician Work RVUs[3]	Fully Implemented Non-Facility PE RVUs	Year 2001 Transitional Non-Facility PE RVUs	Fully Implemented Facility PE RVUs	Year 2001 Transitional Facility PE RVUs	Mal-Practice RVUs	Fully Implemented Non-Facility Total	Year 2001 Transitional Non-Facility Total	Fully Implemented Facility Total	Year 2001 Transitional Facility Total	Global
75555	TC	A	Cardiac MRI/limited study	0.00	11.13	11.25	NA	NA	0.49	11.62	11.74	NA	NA	XXX
75556		N	Cardiac MRI/flow mapping	0.00	0.00	0.00	0.00	0.00	0.00	0.00	0.00	0.00	0.00	XXX
75600		A	Contrast x-ray exam of aorta	0.49	12.72	12.86	12.72	12.86	0.56	13.77	13.91	13.77	13.91	XXX
75600	26	A	Contrast x-ray exam of aorta	0.49	0.21	0.22	0.21	0.22	0.02	0.72	0.73	0.72	0.73	XXX
75600	TC	A	Contrast x-ray exam of aorta	0.00	12.51	12.64	NA	NA	0.54	13.05	13.18	NA	NA	XXX
75605		A	Contrast x-ray exam of aorta	1.14	12.95	13.11	12.95	13.11	0.59	14.68	14.84	14.68	14.84	XXX
75605	26	A	Contrast x-ray exam of aorta	1.14	0.44	0.47	0.44	0.47	0.05	1.63	1.66	1.63	1.66	XXX
75605	TC	A	Contrast x-ray exam of aorta	0.00	12.51	12.64	NA	NA	0.54	13.05	13.18	NA	NA	XXX
75625		A	Contrast x-ray exam of aorta	1.14	12.92	13.08	12.92	13.08	0.59	14.65	14.81	14.65	14.81	XXX
75625	26	A	Contrast x-ray exam of aorta	1.14	0.41	0.44	0.41	0.44	0.05	1.60	1.63	1.60	1.63	XXX
75625	TC	A	Contrast x-ray exam of aorta	0.00	12.51	12.64	NA	NA	0.54	13.05	13.18	NA	NA	XXX
75630		A	X-ray aorta, leg arteries	1.79	13.72	13.85	13.72	13.85	0.65	16.16	16.29	16.16	16.29	XXX
75630	26	A	X-ray aorta, leg arteries	1.79	0.68	0.67	0.68	0.67	0.08	2.55	2.54	2.55	2.54	XXX
75630	TC	A	X-ray aorta, leg arteries	0.00	13.04	13.18	NA	NA	0.57	13.61	13.75	NA	NA	XXX
75635		A	Ct angio abdominal arteries	1.89	9.19	9.19	9.19	9.19	0.37	11.45	11.45	11.45	11.45	XXX
75635	26	A	Ct angio abdominal arteries	1.89	0.76	0.76	0.76	0.76	0.05	2.70	2.70	2.70	2.70	XXX
75635	TC	A	Ct angio abdominal arteries	0.00	8.43	8.43	NA	NA	0.32	8.75	8.75	NA	NA	XXX
75650		A	Artery x-rays, head & neck	1.49	13.04	13.22	13.04	13.22	0.61	15.14	15.32	15.14	15.32	XXX
75650	26	A	Artery x-rays, head & neck	1.49	0.53	0.58	0.53	0.58	0.07	2.09	2.14	2.09	2.14	XXX
75650	TC	A	Artery x-rays, head & neck	0.00	12.51	12.64	NA	NA	0.54	13.05	13.18	NA	NA	XXX
75658		A	Artery x-rays, arm	1.31	13.04	13.20	13.04	13.20	0.60	14.95	15.11	14.95	15.11	XXX
75658	26	A	Artery x-rays, arm	1.31	0.53	0.56	0.53	0.56	0.06	1.90	1.93	1.90	1.93	XXX
75658	TC	A	Artery x-rays, arm	0.00	12.51	12.64	NA	NA	0.54	13.05	13.18	NA	NA	XXX
75660		A	Artery x-rays, head & neck	1.31	13.00	13.17	13.00	13.17	0.60	14.91	15.08	14.91	15.08	XXX
75660	26	A	Artery x-rays, head & neck	1.31	0.49	0.53	0.49	0.53	0.06	1.86	1.90	1.86	1.90	XXX
75660	TC	A	Artery x-rays, head & neck	0.00	12.51	12.64	NA	NA	0.54	13.05	13.18	NA	NA	XXX
75662		A	Artery x-rays, head & neck	1.66	13.16	13.33	13.16	13.33	0.62	15.44	15.61	15.44	15.61	XXX
75662	26	A	Artery x-rays, head & neck	1.66	0.65	0.69	0.65	0.69	0.08	2.39	2.43	2.39	2.43	XXX
75662	TC	A	Artery x-rays, head & neck	0.00	12.51	12.64	NA	NA	0.54	13.05	13.18	NA	NA	XXX
75665		A	Artery x-rays, head & neck	1.31	12.99	13.16	12.99	13.16	0.61	14.91	15.08	14.91	15.08	XXX
75665	26	A	Artery x-rays, head & neck	1.31	0.48	0.52	0.48	0.52	0.07	1.86	1.90	1.86	1.90	XXX
75665	TC	A	Artery x-rays, head & neck	0.00	12.51	12.64	NA	NA	0.54	13.05	13.18	NA	NA	XXX
75671		A	Artery x-rays, head & neck	1.66	13.11	13.29	13.11	13.29	0.62	15.39	15.57	15.39	15.57	XXX
75671	26	A	Artery x-rays, head & neck	1.66	0.60	0.65	0.60	0.65	0.08	2.34	2.39	2.34	2.39	XXX
75671	TC	A	Artery x-rays, head & neck	0.00	12.51	12.64	NA	NA	0.54	13.05	13.18	NA	NA	XXX
75676		A	Artery x-rays, neck	1.31	12.99	13.16	12.99	13.16	0.61	14.91	15.08	14.91	15.08	XXX
75676	26	A	Artery x-rays, neck	1.31	0.48	0.52	0.48	0.52	0.07	1.86	1.90	1.86	1.90	XXX
75676	TC	A	Artery x-rays, neck	0.00	12.51	12.64	NA	NA	0.54	13.05	13.18	NA	NA	XXX
75680		A	Artery x-rays, neck	1.66	13.11	13.29	13.11	13.29	0.62	15.39	15.57	15.39	15.57	XXX
75680	26	A	Artery x-rays, neck	1.66	0.60	0.65	0.60	0.65	0.08	2.34	2.39	2.34	2.39	XXX
75680	TC	A	Artery x-rays, neck	0.00	12.51	12.64	NA	NA	0.54	13.05	13.18	NA	NA	XXX
75685		A	Artery x-rays, spine	1.31	12.98	13.15	12.98	13.15	0.60	14.89	15.06	14.89	15.06	XXX
75685	26	A	Artery x-rays, spine	1.31	0.47	0.51	0.47	0.51	0.06	1.84	1.88	1.84	1.88	XXX
75685	TC	A	Artery x-rays, spine	0.00	12.51	12.64	NA	NA	0.54	13.05	13.18	NA	NA	XXX
75705		A	Artery x-rays, spine	2.18	13.29	13.49	13.29	13.49	0.65	16.12	16.32	16.12	16.32	XXX
75705	26	A	Artery x-rays, spine	2.18	0.78	0.85	0.78	0.85	0.11	3.07	3.14	3.07	3.14	XXX
75705	TC	A	Artery x-rays, spine	0.00	12.51	12.64	NA	NA	0.54	13.05	13.18	NA	NA	XXX
75710		A	Artery x-rays, arm/leg	1.14	12.93	13.09	12.93	13.09	0.60	14.67	14.83	14.67	14.83	XXX
75710	26	A	Artery x-rays, arm/leg	1.14	0.42	0.45	0.42	0.45	0.06	1.62	1.65	1.62	1.65	XXX
75710	TC	A	Artery x-rays, arm/leg	0.00	12.51	12.64	NA	NA	0.54	13.05	13.18	NA	NA	XXX
75716		A	Artery x-rays, arms/legs	1.31	12.98	13.15	12.98	13.15	0.60	14.89	15.06	14.89	15.06	XXX
75716	26	A	Artery x-rays, arms/legs	1.31	0.47	0.51	0.47	0.51	0.06	1.84	1.88	1.84	1.88	XXX
75716	TC	A	Artery x-rays, arms/legs	0.00	12.51	12.64	NA	NA	0.54	13.05	13.18	NA	NA	XXX
75722		A	Artery x-rays, kidney	1.14	12.95	13.11	12.95	13.11	0.59	14.68	14.84	14.68	14.84	XXX
75722	26	A	Artery x-rays, kidney	1.14	0.44	0.47	0.44	0.47	0.05	1.63	1.66	1.63	1.66	XXX
75722	TC	A	Artery x-rays, kidney	0.00	12.51	12.64	NA	NA	0.54	13.05	13.18	NA	NA	XXX
75724		A	Artery x-rays, kidneys	1.49	13.13	13.29	13.13	13.29	0.59	15.21	15.37	15.21	15.37	XXX
75724	26	A	Artery x-rays, kidneys	1.49	0.62	0.65	0.62	0.65	0.05	2.16	2.19	2.16	2.19	XXX
75724	TC	A	Artery x-rays, kidneys	0.00	12.51	12.64	NA	NA	0.54	13.05	13.18	NA	NA	XXX
75726		A	Artery x-rays, abdomen	1.14	12.92	13.08	12.92	13.08	0.59	14.65	14.81	14.65	14.81	XXX
75726	26	A	Artery x-rays, abdomen	1.14	0.41	0.44	0.41	0.44	0.05	1.60	1.63	1.60	1.63	XXX
75726	TC	A	Artery x-rays, abdomen	0.00	12.51	12.64	NA	NA	0.54	13.05	13.18	NA	NA	XXX
75731		A	Artery x-rays, adrenal gland	1.14	12.92	13.08	12.92	13.08	0.59	14.65	14.81	14.65	14.81	XXX
75731	26	A	Artery x-rays, adrenal gland	1.14	0.41	0.44	0.41	0.44	0.05	1.60	1.63	1.60	1.63	XXX
75731	TC	A	Artery x-rays, adrenal gland	0.00	12.51	12.64	NA	NA	0.54	13.05	13.18	NA	NA	XXX
75733		A	Artery x-rays, adrenals	1.31	12.99	13.16	12.99	13.16	0.60	14.90	15.07	14.90	15.07	XXX
75733	26	A	Artery x-rays, adrenals	1.31	0.48	0.52	0.48	0.52	0.06	1.85	1.89	1.85	1.89	XXX
75733	TC	A	Artery x-rays, adrenals	0.00	12.51	12.64	NA	NA	0.54	13.05	13.18	NA	NA	XXX
75736		A	Artery x-rays, pelvis	1.14	12.92	13.08	12.92	13.08	0.59	14.65	14.81	14.65	14.81	XXX
75736	26	A	Artery x-rays, pelvis	1.14	0.41	0.44	0.41	0.44	0.05	1.60	1.63	1.60	1.63	XXX
75736	TC	A	Artery x-rays, pelvis	0.00	12.51	12.64	NA	NA	0.54	13.05	13.18	NA	NA	XXX
75741		A	Artery x-rays, lung	1.31	12.98	13.15	12.98	13.15	0.60	14.89	15.06	14.89	15.06	XXX
75741	26	A	Artery x-rays, lung	1.31	0.47	0.51	0.47	0.51	0.06	1.84	1.88	1.84	1.88	XXX
75741	TC	A	Artery x-rays, lung	0.00	12.51	12.64	NA	NA	0.54	13.05	13.18	NA	NA	XXX
75743		A	Artery x-rays, lungs	1.66	13.10	13.28	13.10	13.28	0.61	15.37	15.55	15.37	15.55	XXX
75743	26	A	Artery x-rays, lungs	1.66	0.59	0.64	0.59	0.64	0.07	2.32	2.37	2.32	2.37	XXX
75743	TC	A	Artery x-rays, lungs	0.00	12.51	12.64	NA	NA	0.54	13.05	13.18	NA	NA	XXX
75746		A	Artery x-rays, lung	1.14	12.92	13.08	12.92	13.08	0.59	14.65	14.81	14.65	14.81	XXX
75746	26	A	Artery x-rays, lung	1.14	0.41	0.44	0.41	0.44	0.05	1.60	1.63	1.60	1.63	XXX
75746	TC	A	Artery x-rays, lung	0.00	12.51	12.64	NA	NA	0.54	13.05	13.18	NA	NA	XXX
75756		A	Artery x-rays, chest	1.14	13.00	13.14	13.00	13.14	0.58	14.72	14.86	14.72	14.86	XXX
75756	26	A	Artery x-rays, chest	1.14	0.49	0.50	0.49	0.50	0.04	1.67	1.68	1.67	1.68	XXX
75756	TC	A	Artery x-rays, chest	0.00	12.51	12.64	NA	NA	0.54	13.05	13.18	NA	NA	XXX

[1] CPT codes and descriptions only are copyright 2000 American Medical Association. All Rights Reserved. Applicable FARS/DFARS Apply.
[2] Copyright 1994 American Dental Association. All rights reserved.
[3] + Indicates RVUs are not used for Medicare payment.
[4] PE RVUs = Practice Expense Relative Value Units.

ADDENDUM B.—RELATIVE VALUE UNITS (RVU'S) AND RELATED INFORMATION—Continued

CPT[1]/ HCPCS[2]	MOD	Status	Description	Physician Work RVUs[3]	Fully Implemented Non-Facility PE RVUs	Year 2001 Transitional Non-Facility PE RVUs	Fully Implemented Facility PE RVUs	Year 2001 Transitional Facility PE RVUs	Mal-Practice RVUs	Fully Implemented Non-Facility Total	Year 2001 Transitional Non-Facility Total	Fully Implemented Facility Total	Year 2001 Transitional Facility Total	Global
75774		A	Artery x-ray, each vessel	0.36	12.65	12.79	12.65	12.79	0.56	13.57	13.71	13.57	13.71	ZZZ
75774	26	A	Artery x-ray, each vessel	0.36	0.14	0.15	0.14	0.15	0.02	0.52	0.53	0.52	0.53	ZZZ
75774	TC	A	Artery x-ray, each vessel	0.00	12.51	12.64	NA	NA	0.54	13.05	13.18	NA	NA	ZZZ
75790		A	Visualize A-V shunt	1.84	2.00	2.07	2.00	2.07	0.16	4.00	4.07	4.00	4.07	XXX
75790	26	A	Visualize A-V shunt	1.84	0.65	0.71	0.65	0.71	0.09	2.58	2.64	2.58	2.64	XXX
75790	TC	A	Visualize A-V shunt	0.00	1.35	1.36	NA	NA	0.07	1.42	1.43	NA	NA	XXX
75801		A	Lymph vessel x-ray, arm/leg	0.81	5.66	5.75	5.66	5.75	0.29	6.76	6.85	6.76	6.85	XXX
75801	26	A	Lymph vessel x-ray, arm/leg	0.81	0.29	0.32	0.29	0.32	0.05	1.15	1.18	1.15	1.18	XXX
75801	TC	A	Lymph vessel x-ray, arm/leg	0.00	5.37	5.43	NA	NA	0.24	5.61	5.67	NA	NA	XXX
75803		A	Lymph vessel x-ray,arms/legs	1.17	5.79	5.88	5.79	5.88	0.29	7.25	7.34	7.25	7.34	XXX
75803	26	A	Lymph vessel x-ray,arms/legs	1.17	0.42	0.45	0.42	0.45	0.05	1.64	1.67	1.64	1.67	XXX
75803	TC	A	Lymph vessel x-ray,arms/legs	0.00	5.37	5.43	NA	NA	0.24	5.61	5.67	NA	NA	XXX
75805		A	Lymph vessel x-ray, trunk	0.81	6.34	6.44	6.34	6.44	0.31	7.46	7.56	7.46	7.56	XXX
75805	26	A	Lymph vessel x-ray, trunk	0.81	0.29	0.32	0.29	0.32	0.04	1.14	1.17	1.14	1.17	XXX
75805	TC	A	Lymph vessel x-ray, trunk	0.00	6.05	6.12	NA	NA	0.27	6.32	6.39	NA	NA	XXX
75807		A	Lymph vessel x-ray, trunk	1.17	6.47	6.57	6.47	6.57	0.32	7.96	8.06	7.96	8.06	XXX
75807	26	A	Lymph vessel x-ray, trunk	1.17	0.42	0.45	0.42	0.45	0.05	1.64	1.67	1.64	1.67	XXX
75807	TC	A	Lymph vessel x-ray, trunk	0.00	6.05	6.12	NA	NA	0.27	6.32	6.39	NA	NA	XXX
75809		A	Nonvascular shunt, x-ray	0.47	0.95	0.97	0.95	0.97	0.06	1.48	1.50	1.48	1.50	XXX
75809	26	A	Nonvascular shunt, x-ray	0.47	0.17	0.18	0.17	0.18	0.02	0.66	0.67	0.66	0.67	XXX
75809	TC	A	Nonvascular shunt, x-ray	0.00	0.78	0.79	NA	NA	0.04	0.82	0.83	NA	NA	XXX
75810		A	Vein x-ray, spleen/liver	1.14	12.91	13.08	12.91	13.08	0.60	14.65	14.82	14.65	14.82	XXX
75810	26	A	Vein x-ray, spleen/liver	1.14	0.40	0.44	0.40	0.44	0.06	1.60	1.64	1.60	1.64	XXX
75810	TC	A	Vein x-ray, spleen/liver	0.00	12.51	12.64	NA	NA	0.54	13.05	13.18	NA	NA	XXX
75820		A	Vein x-ray, arm/leg	0.70	1.19	1.23	1.19	1.23	0.08	1.97	2.01	1.97	2.01	XXX
75820	26	A	Vein x-ray, arm/leg	0.70	0.25	0.28	0.25	0.28	0.03	0.98	1.01	0.98	1.01	XXX
75820	TC	A	Vein x-ray, arm/leg	0.00	0.94	0.95	NA	NA	0.05	0.99	1.00	NA	NA	XXX
75822		A	Vein x-ray, arms/legs	1.06	1.85	1.90	1.85	1.90	0.12	3.03	3.08	3.03	3.08	XXX
75822	26	A	Vein x-ray, arms/legs	1.06	0.38	0.41	0.38	0.41	0.05	1.49	1.52	1.49	1.52	XXX
75822	TC	A	Vein x-ray, arms/legs	0.00	1.47	1.49	NA	NA	0.07	1.54	1.56	NA	NA	XXX
75825		A	Vein x-ray, trunk	1.14	12.92	13.08	12.92	13.08	0.60	14.66	14.82	14.66	14.82	XXX
75825	26	A	Vein x-ray, trunk	1.14	0.41	0.44	0.41	0.44	0.06	1.61	1.64	1.61	1.64	XXX
75825	TC	A	Vein x-ray, trunk	0.00	12.51	12.64	NA	NA	0.54	13.05	13.18	NA	NA	XXX
75827		A	Vein x-ray, chest	1.14	12.91	13.08	12.91	13.08	0.59	14.64	14.81	14.64	14.81	XXX
75827	26	A	Vein x-ray, chest	1.14	0.40	0.44	0.40	0.44	0.05	1.59	1.63	1.59	1.63	XXX
75827	TC	A	Vein x-ray, chest	0.00	12.51	12.64	NA	NA	0.54	13.05	13.18	NA	NA	XXX
75831		A	Vein x-ray, kidney	1.14	12.91	13.08	12.91	13.08	0.59	14.64	14.81	14.64	14.81	XXX
75831	26	A	Vein x-ray, kidney	1.14	0.40	0.44	0.40	0.44	0.05	1.59	1.63	1.59	1.63	XXX
75831	TC	A	Vein x-ray, kidney	0.00	12.51	12.64	NA	NA	0.54	13.05	13.18	NA	NA	XXX
75833		A	Vein x-ray, kidneys	1.49	13.04	13.22	13.04	13.22	0.61	15.14	15.32	15.14	15.32	XXX
75833	26	A	Vein x-ray, kidneys	1.49	0.53	0.58	0.53	0.58	0.07	2.09	2.14	2.09	2.14	XXX
75833	TC	A	Vein x-ray, kidneys	0.00	12.51	12.64	NA	NA	0.54	13.05	13.18	NA	NA	XXX
75840		A	Vein x-ray, adrenal gland	1.14	12.92	13.08	12.92	13.08	0.61	14.67	14.83	14.67	14.83	XXX
75840	26	A	Vein x-ray, adrenal gland	1.14	0.41	0.44	0.41	0.44	0.07	1.62	1.65	1.62	1.65	XXX
75840	TC	A	Vein x-ray, adrenal gland	0.00	12.51	12.64	NA	NA	0.54	13.05	13.18	NA	NA	XXX
75842		A	Vein x-ray, adrenal glands	1.49	13.03	13.21	13.03	13.21	0.61	15.13	15.31	15.13	15.31	XXX
75842	26	A	Vein x-ray, adrenal glands	1.49	0.52	0.57	0.52	0.57	0.07	2.08	2.13	2.08	2.13	XXX
75842	TC	A	Vein x-ray, adrenal glands	0.00	12.51	12.64	NA	NA	0.54	13.05	13.18	NA	NA	XXX
75860		A	Vein x-ray, neck	1.14	12.94	13.10	12.94	13.10	0.60	14.68	14.84	14.68	14.84	XXX
75860	26	A	Vein x-ray, neck	1.14	0.43	0.46	0.43	0.46	0.06	1.63	1.66	1.63	1.66	XXX
75860	TC	A	Vein x-ray, neck	0.00	12.51	12.64	NA	NA	0.54	13.05	13.18	NA	NA	XXX
75870		A	Vein x-ray, skull	1.14	12.93	13.09	12.93	13.09	0.60	14.67	14.83	14.67	14.83	XXX
75870	26	A	Vein x-ray, skull	1.14	0.42	0.45	0.42	0.45	0.06	1.62	1.65	1.62	1.65	XXX
75870	TC	A	Vein x-ray, skull	0.00	12.51	12.64	NA	NA	0.54	13.05	13.18	NA	NA	XXX
75872		A	Vein x-ray, skull	1.14	12.91	13.08	12.91	13.08	0.59	14.64	14.81	14.64	14.81	XXX
75872	26	A	Vein x-ray, skull	1.14	0.40	0.44	0.40	0.44	0.05	1.59	1.63	1.59	1.63	XXX
75872	TC	A	Vein x-ray, skull	0.00	12.51	12.64	NA	NA	0.54	13.05	13.18	NA	NA	XXX
75880		A	Vein x-ray, eye socket	0.70	1.19	1.23	1.19	1.23	0.08	1.97	2.01	1.97	2.01	XXX
75880	26	A	Vein x-ray, eye socket	0.70	0.25	0.28	0.25	0.28	0.03	0.98	1.01	0.98	1.01	XXX
75880	TC	A	Vein x-ray, eye socket	0.00	0.94	0.95	NA	NA	0.05	0.99	1.00	NA	NA	XXX
75885		A	Vein x-ray, liver	1.44	13.02	13.20	13.02	13.20	0.60	15.06	15.24	15.06	15.24	XXX
75885	26	A	Vein x-ray, liver	1.44	0.51	0.56	0.51	0.56	0.06	2.01	2.06	2.01	2.06	XXX
75885	TC	A	Vein x-ray, liver	0.00	12.51	12.64	NA	NA	0.54	13.05	13.18	NA	NA	XXX
75887		A	Vein x-ray, liver	1.44	13.02	13.20	13.02	13.20	0.60	15.06	15.24	15.06	15.24	XXX
75887	26	A	Vein x-ray, liver	1.44	0.51	0.56	0.51	0.56	0.06	2.01	2.06	2.01	2.06	XXX
75887	TC	A	Vein x-ray, liver	0.00	12.51	12.64	NA	NA	0.54	13.05	13.18	NA	NA	XXX
75889		A	Vein x-ray, liver	1.14	12.91	13.08	12.91	13.08	0.59	14.64	14.81	14.64	14.81	XXX
75889	26	A	Vein x-ray, liver	1.14	0.40	0.44	0.40	0.44	0.05	1.59	1.63	1.59	1.63	XXX
75889	TC	A	Vein x-ray, liver	0.00	12.51	12.64	NA	NA	0.54	13.05	13.18	NA	NA	XXX
75891		A	Vein x-ray, liver	1.14	12.91	13.08	12.91	13.08	0.59	14.64	14.81	14.64	14.81	XXX
75891	26	A	Vein x-ray, liver	1.14	0.40	0.44	0.40	0.44	0.05	1.59	1.63	1.59	1.63	XXX
75891	TC	A	Vein x-ray, liver	0.00	12.51	12.64	NA	NA	0.54	13.05	13.18	NA	NA	XXX
75893		A	Venous sampling by catheter	0.54	12.70	12.85	12.70	12.85	0.56	13.80	13.95	13.80	13.95	XXX
75893	26	A	Venous sampling by catheter	0.54	0.19	0.21	0.19	0.21	0.02	0.75	0.77	0.75	0.77	XXX
75893	TC	A	Venous sampling by catheter	0.00	12.51	12.64	NA	NA	0.54	13.05	13.18	NA	NA	XXX
75894		A	X-rays, transcath therapy	1.31	24.43	24.72	24.43	24.72	1.12	26.86	27.15	26.86	27.15	XXX
75894	26	A	X-rays, transcath therapy	1.31	0.47	0.51	0.47	0.51	0.07	1.85	1.89	1.85	1.89	XXX
75894	TC	A	X-rays, transcath therapy	0.00	23.96	24.21	NA	NA	1.05	25.01	25.26	NA	NA	XXX
75896		A	X-rays, transcath therapy	1.31	21.32	21.58	21.32	21.58	0.97	23.60	23.86	23.60	23.86	XXX
75896	26	A	X-rays, transcath therapy	1.31	0.48	0.52	0.48	0.52	0.06	1.85	1.89	1.85	1.89	XXX
75896	TC	A	X-rays, transcath therapy	0.00	20.84	21.06	NA	NA	0.91	21.75	21.97	NA	NA	XXX
75898		A	Follow-up angiogram	1.65	1.65	1.71	1.65	1.71	0.12	3.42	3.48	3.42	3.48	XXX
75898	26	A	Follow-up angiogram	1.65	0.60	0.65	0.60	0.65	0.07	2.32	2.37	2.32	2.37	XXX

[1] CPT codes and descriptions only are copyright 2000 American Medical Association. All Rights Reserved. Applicable FARS/DFARS Apply.
[2] Copyright 1994 American Dental Association. All rights reserved.
[3] + Indicates RVUs are not used for Medicare payment.
[4] PE RVUs = Practice Expense Relative Value Units.

ADDENDUM B.—RELATIVE VALUE UNITS (RVU'S) AND RELATED INFORMATION—Continued

CPT[1]/ HCPCS[2]	MOD	Status	Description	Physician Work RVUs[3]	Fully Implemented Non-Facility PE RVUs	Year 2001 Transitional Non-Facility PE RVUs	Fully Implemented Facility PE RVUs	Year 2001 Transitional Facility PE RVUs	Mal-Practice RVUs	Fully Implemented Non-Facility Total	Year 2001 Transitional Non-Facility Total	Fully Implemented Facility Total	Year 2001 Transitional Facility Total	Global
75898	TC	A	Follow-up angiogram	0.00	1.05	1.06	NA	NA	0.05	1.10	1.11	NA	NA	XXX
75900		A	Arterial catheter exchange	0.49	21.00	21.24	21.00	21.24	0.94	22.43	22.67	22.43	22.67	XXX
75900	26	A	Arterial catheter exchange	0.49	0.18	0.20	0.18	0.20	0.02	0.69	0.71	0.69	0.71	XXX
75900	TC	A	Arterial catheter exchange	0.00	20.82	21.04	NA	NA	0.92	21.74	21.96	NA	NA	XXX
75940		A	X-ray placement, vein filter	0.54	12.70	12.85	12.70	12.85	0.57	13.81	13.96	13.81	13.96	XXX
75940	26	A	X-ray placement, vein filter	0.54	0.19	0.21	0.19	0.21	0.03	0.76	0.78	0.76	0.78	XXX
75940	TC	A	X-ray placement, vein filter	0.00	12.51	12.64	NA	NA	0.54	13.05	13.18	NA	NA	XXX
75945		A	Intravascular us	0.40	4.68	4.75	4.68	4.75	0.23	5.31	5.38	5.31	5.38	XXX
75945	26	A	Intravascular us	0.40	0.15	0.17	0.15	0.17	0.03	0.58	0.60	0.58	0.60	XXX
75945	TC	A	Intravascular us	0.00	4.53	4.58	NA	NA	0.20	4.73	4.78	NA	NA	XXX
75946		A	Intravascular us add-on	0.40	2.43	2.47	2.43	2.47	0.14	2.97	3.01	2.97	3.01	ZZZ
75946	26	A	Intravascular us add-on	0.40	0.15	0.17	0.15	0.17	0.03	0.58	0.60	0.58	0.60	ZZZ
75946	TC	A	Intravascular us add-on	0.00	2.28	2.30	NA	NA	0.11	2.39	2.41	NA	NA	ZZZ
75952		A	Endovasc repair abdom aorta	4.00	1.60	1.60	1.60	1.60	0.68	6.28	6.28	6.28	6.28	XXX
75953		A	Abdom aneurysm endovas rpr	1.36	0.54	0.54	0.54	0.54	0.68	2.58	2.58	2.58	2.58	XXX
75960		A	Transcatheter intro, stent	0.82	15.11	15.28	15.11	15.28	0.68	16.61	16.78	16.61	16.78	XXX
75960	26	A	Transcatheter intro, stent	0.82	0.31	0.33	0.31	0.33	0.04	1.17	1.19	1.17	1.19	XXX
75960	TC	A	Transcatheter intro, stent	0.00	14.80	14.95	NA	NA	0.64	15.44	15.59	NA	NA	XXX
75961		A	Retrieval, broken catheter	4.25	11.94	12.19	11.94	12.19	0.64	16.83	17.08	16.83	17.08	XXX
75961	26	A	Retrieval, broken catheter	4.25	1.52	1.66	1.52	1.66	0.18	5.95	6.09	5.95	6.09	XXX
75961	TC	A	Retrieval, broken catheter	0.00	10.42	10.53	NA	NA	0.46	10.88	10.99	NA	NA	XXX
75962		A	Repair arterial blockage	0.54	15.82	16.01	15.82	16.01	0.72	17.08	17.27	17.08	17.27	XXX
75962	26	A	Repair arterial blockage	0.54	0.20	0.22	0.20	0.22	0.03	0.77	0.79	0.77	0.79	XXX
75962	TC	A	Repair arterial blockage	0.00	15.62	15.79	NA	NA	0.69	16.31	16.48	NA	NA	XXX
75964		A	Repair artery blockage, each	0.36	8.46	8.56	8.46	8.56	0.38	9.20	9.30	9.20	9.30	ZZZ
75964	26	A	Repair artery blockage, each	0.36	0.13	0.14	0.13	0.14	0.02	0.51	0.52	0.51	0.52	ZZZ
75964	TC	A	Repair artery blockage, each	0.00	8.33	8.42	NA	NA	0.36	8.69	8.78	NA	NA	ZZZ
75966		A	Repair arterial blockage	1.31	16.13	16.33	16.13	16.33	0.75	18.19	18.39	18.19	18.39	XXX
75966	26	A	Repair arterial blockage	1.31	0.51	0.54	0.51	0.54	0.06	1.88	1.91	1.88	1.91	XXX
75966	TC	A	Repair arterial blockage	0.00	15.62	15.79	NA	NA	0.69	16.31	16.48	NA	NA	XXX
75968		A	Repair artery blockage, each	0.36	8.47	8.57	8.47	8.57	0.37	9.20	9.30	9.20	9.30	ZZZ
75968	26	A	Repair artery blockage, each	0.36	0.14	0.15	0.14	0.15	0.01	0.51	0.52	0.51	0.52	ZZZ
75968	TC	A	Repair artery blockage, each	0.00	8.33	8.42	NA	NA	0.36	8.69	8.78	NA	NA	ZZZ
75970		A	Vascular biopsy	0.83	11.76	11.91	11.76	11.91	0.54	13.13	13.28	13.13	13.28	XXX
75970	26	A	Vascular biopsy	0.83	0.30	0.33	0.30	0.33	0.04	1.17	1.20	1.17	1.20	XXX
75970	TC	A	Vascular biopsy	0.00	11.46	11.58	NA	NA	0.50	11.96	12.08	NA	NA	XXX
75978		A	Repair venous blockage	0.54	15.81	16.06	15.81	16.06	0.71	17.06	17.31	17.06	17.31	XXX
75978	26	A	Repair venous blockage	0.54	0.19	0.27	0.19	0.27	0.02	0.75	0.83	0.75	0.83	XXX
75978	TC	A	Repair venous blockage	0.00	15.62	15.79	NA	NA	0.69	16.31	16.48	NA	NA	XXX
75980		A	Contrast xray exam bile duct	1.44	5.88	5.99	5.88	5.99	0.30	7.62	7.73	7.62	7.73	XXX
75980	26	A	Contrast xray exam bile duct	1.44	0.51	0.56	0.51	0.56	0.06	2.01	2.06	2.01	2.06	XXX
75980	TC	A	Contrast xray exam bile duct	0.00	5.37	5.43	NA	NA	0.24	5.61	5.67	NA	NA	XXX
75982		A	Contrast xray exam bile duct	1.44	6.56	6.68	6.56	6.68	0.33	8.33	8.45	8.33	8.45	XXX
75982	26	A	Contrast xray exam bile duct	1.44	0.51	0.56	0.51	0.56	0.06	2.01	2.06	2.01	2.06	XXX
75982	TC	A	Contrast xray exam bile duct	0.00	6.05	6.12	NA	NA	0.27	6.32	6.39	NA	NA	XXX
75984		A	Xray control catheter change	0.72	2.19	2.24	2.19	2.24	0.12	3.03	3.08	3.03	3.08	XXX
75984	26	A	Xray control catheter change	0.72	0.25	0.28	0.25	0.28	0.03	1.00	1.03	1.00	1.03	XXX
75984	TC	A	Xray control catheter change	0.00	1.94	1.96	NA	NA	0.09	2.03	2.05	NA	NA	XXX
75989		A	Abscess drainage under x-ray	1.19	3.55	3.62	3.55	3.62	0.19	4.93	5.00	4.93	5.00	XXX
75989	26	A	Abscess drainage under x-ray	1.19	0.42	0.46	0.42	0.46	0.05	1.66	1.70	1.66	1.70	XXX
75989	TC	A	Abscess drainage under x-ray	0.00	3.13	3.16	NA	NA	0.14	3.27	3.30	NA	NA	XXX
75992		A	Atherectomy, x-ray exam	0.54	15.83	16.02	15.83	16.02	0.71	17.08	17.27	17.08	17.27	XXX
75992	26	A	Atherectomy, x-ray exam	0.54	0.21	0.23	0.21	0.23	0.02	0.77	0.79	0.77	0.79	XXX
75992	TC	A	Atherectomy, x-ray exam	0.00	15.62	15.79	NA	NA	0.69	16.31	16.48	NA	NA	XXX
75993		A	Atherectomy, x-ray exam	0.36	8.48	8.58	8.48	8.58	0.37	9.21	9.31	9.21	9.31	ZZZ
75993	26	A	Atherectomy, x-ray exam	0.36	0.15	0.16	0.15	0.16	0.01	0.52	0.53	0.52	0.53	ZZZ
75993	TC	A	Atherectomy, x-ray exam	0.00	8.33	8.42	NA	NA	0.36	8.69	8.78	NA	NA	ZZZ
75994		A	Atherectomy, x-ray exam	1.31	16.13	16.33	16.13	16.33	0.75	18.19	18.39	18.19	18.39	XXX
75994	26	A	Atherectomy, x-ray exam	1.31	0.51	0.54	0.51	0.54	0.06	1.88	1.91	1.88	1.91	XXX
75994	TC	A	Atherectomy, x-ray exam	0.00	15.62	15.79	NA	NA	0.69	16.31	16.48	NA	NA	XXX
75995		A	Atherectomy, x-ray exam	1.31	16.08	16.29	16.08	16.29	0.75	18.14	18.35	18.14	18.35	XXX
75995	26	A	Atherectomy, x-ray exam	1.31	0.46	0.50	0.46	0.50	0.06	1.83	1.87	1.83	1.87	XXX
75995	TC	A	Atherectomy, x-ray exam	0.00	15.62	15.79	NA	NA	0.69	16.31	16.48	NA	NA	XXX
75996		A	Atherectomy, x-ray exam	0.36	8.47	8.57	8.47	8.57	0.37	9.20	9.30	9.20	9.30	ZZZ
75996	26	A	Atherectomy, x-ray exam	0.36	0.14	0.15	0.14	0.15	0.01	0.51	0.52	0.51	0.52	ZZZ
75996	TC	A	Atherectomy, x-ray exam	0.00	8.33	8.42	NA	NA	0.36	8.69	8.78	NA	NA	ZZZ
76000		A	Fluoroscope examination	0.17	1.35	1.37	1.35	1.37	0.07	1.59	1.61	1.59	1.61	XXX
76000	26	A	Fluoroscope examination	0.17	0.05	0.06	0.05	0.06	0.01	0.23	0.24	0.23	0.24	XXX
76000	TC	A	Fluoroscope examination	0.00	1.30	1.31	NA	NA	0.06	1.36	1.37	NA	NA	XXX
76001		A	Fluoroscope exam, extensive	0.67	2.84	2.90	2.84	2.90	0.15	3.66	3.72	3.66	3.72	XXX
76001	26	A	Fluoroscope exam, extensive	0.67	0.24	0.27	0.24	0.27	0.03	0.94	0.97	0.94	0.97	XXX
76001	TC	A	Fluoroscope exam, extensive	0.00	2.60	2.63	NA	NA	0.12	2.72	2.75	NA	NA	XXX
76003		A	Needle localization by x-ray	0.54	1.48	1.51	1.48	1.51	0.09	2.11	2.14	2.11	2.14	XXX
76003	26	A	Needle localization by x-ray	0.54	0.18	0.20	0.18	0.20	0.03	0.75	0.77	0.75	0.77	XXX
76003	TC	A	Needle localization by x-ray	0.00	1.30	1.31	NA	NA	0.06	1.36	1.37	NA	NA	XXX
76005		A	Fluoroguide for spine inject	0.60	1.49	1.49	1.49	1.49	0.09	2.18	2.18	2.18	2.18	XXX
76005	26	A	Fluoroguide for spine inject	0.60	0.19	0.19	0.19	0.19	0.03	0.82	0.82	0.82	0.82	XXX
76005	TC	A	Fluoroguide for spine inject	0.00	1.30	1.30	NA	NA	0.06	1.36	1.36	NA	NA	XXX
76006		A	X-ray stress view	0.41	0.19	0.19	0.19	0.19	0.04	0.64	0.64	0.64	0.64	XXX
76010		A	X-ray, nose to rectum	0.18	0.58	0.60	0.58	0.60	0.03	0.79	0.81	0.79	0.81	XXX
76010	26	A	X-ray, nose to rectum	0.18	0.06	0.07	0.06	0.07	0.01	0.25	0.26	0.25	0.26	XXX
76010	TC	A	X-ray, nose to rectum	0.00	0.52	0.53	NA	NA	0.02	0.54	0.55	NA	NA	XXX
76012		A	Percut vertebroplasty fluor	1.31	0.49	0.49	0.49	0.49	1.10	2.90	2.90	2.90	2.90	XXX

[1] CPT codes and descriptions only are copyright 2000 American Medical Association. All Rights Reserved. Applicable FARS/DFARS Apply.
[2] Copyright 1994 American Dental Association. All rights reserved.
[3] + Indicates RVUs are not used for Medicare payment.
[4] PE RVUs = Practice Expense Relative Value Units.

ADDENDUM B.—RELATIVE VALUE UNITS (RVU'S) AND RELATED INFORMATION—Continued

CPT[1]/ HCPCS[2]	MOD	Status	Description	Physician Work RVUs[3]	Fully Implemented Non-Facility PE RVUs	Year 2001 Transitional Non-Facility PE RVUs	Fully Implemented Facility PE RVUs	Year 2001 Transitional Facility PE RVUs	Mal-Practice RVUs	Fully Implemented Non-Facility Total	Year 2001 Transitional Non-Facility Total	Fully Implemented Facility Total	Year 2001 Transitional Facility Total	Global
76013		A	Percut vertebroplasty, ct	1.38	0.52	0.52	0.52	0.52	0.48	2.38	2.38	2.38	2.38	XXX
76020		A	X-rays for bone age	0.19	0.59	0.61	0.59	0.61	0.03	0.81	0.83	0.81	0.83	XXX
76020	26	A	X-rays for bone age	0.19	0.07	0.08	0.07	0.08	0.01	0.27	0.28	0.27	0.28	XXX
76020	TC	A	X-rays for bone age	0.00	0.52	0.53	NA	NA	0.02	0.54	0.55	NA	NA	XXX
76040		A	X-rays, bone evaluation	0.27	0.88	0.90	0.88	0.90	0.07	1.22	1.24	1.22	1.24	XXX
76040	26	A	X-rays, bone evaluation	0.27	0.10	0.11	0.10	0.11	0.03	0.40	0.41	0.40	0.41	XXX
76040	TC	A	X-rays, bone evaluation	0.00	0.78	0.79	NA	NA	0.04	0.82	0.83	NA	NA	XXX
76061		A	X-rays, bone survey	0.45	1.15	1.18	1.15	1.18	0.07	1.67	1.70	1.67	1.70	XXX
76061	26	A	X-rays, bone survey	0.45	0.16	0.18	0.16	0.18	0.02	0.63	0.65	0.63	0.65	XXX
76061	TC	A	X-rays, bone survey	0.00	0.99	1.00	NA	NA	0.05	1.04	1.05	NA	NA	XXX
76062		A	X-rays, bone survey	0.54	1.62	1.66	1.62	1.66	0.09	2.25	2.29	2.25	2.29	XXX
76062	26	A	X-rays, bone survey	0.54	0.19	0.21	0.19	0.21	0.02	0.75	0.77	0.75	0.77	XXX
76062	TC	A	X-rays, bone survey	0.00	1.43	1.45	NA	NA	0.07	1.50	1.52	NA	NA	XXX
76065		A	X-rays, bone evaluation	0.28	0.83	0.85	0.83	0.85	0.05	1.16	1.18	1.16	1.18	XXX
76065	26	A	X-rays, bone evaluation	0.28	0.10	0.11	0.10	0.11	0.01	0.39	0.40	0.39	0.40	XXX
76065	TC	A	X-rays, bone evaluation	0.00	0.73	0.74	NA	NA	0.04	0.77	0.78	NA	NA	XXX
76066		A	Joint(s) survey, single film	0.31	1.21	1.23	1.21	1.23	0.07	1.59	1.61	1.59	1.61	XXX
76066	26	A	Joint(s) survey, single film	0.31	0.11	0.12	0.11	0.12	0.02	0.44	0.45	0.44	0.45	XXX
76066	TC	A	Joint(s) survey, single film	0.00	1.10	1.11	NA	NA	0.05	1.15	1.16	NA	NA	XXX
76070		I	CT scan, bone density study	+0.25	3.03	3.07	3.03	3.07	0.14	3.42	3.46	3.42	3.46	XXX
76070	26	I	CT scan, bone density study	+0.25	0.10	0.11	0.10	0.11	0.01	0.36	0.37	0.36	0.37	XXX
76070	TC	I	CT scan, bone density study	+0.00	2.93	2.96	NA	NA	0.13	3.06	3.09	NA	NA	XXX
76075		A	Dual energy x-ray study	0.30	3.18	3.22	3.18	3.22	0.15	3.63	3.67	3.63	3.67	XXX
76075	26	A	Dual energy x-ray study	0.30	0.11	0.12	0.11	0.12	0.01	0.42	0.43	0.42	0.43	XXX
76075	TC	A	Dual energy x-ray study	0.00	3.07	3.10	NA	NA	0.14	3.21	3.24	NA	NA	XXX
76076		A	Dual energy x-ray study	0.22	0.83	0.85	0.83	0.85	0.05	1.10	1.12	1.10	1.12	XXX
76076	26	A	Dual energy x-ray study	0.22	0.08	0.09	0.08	0.09	0.01	0.31	0.32	0.31	0.32	XXX
76076	TC	A	Dual energy x-ray study	0.00	0.75	0.76	NA	NA	0.04	0.79	0.80	NA	NA	XXX
76078		A	Photodensitometry	0.20	0.83	0.85	0.83	0.85	0.05	1.08	1.10	1.08	1.10	XXX
76078	26	A	Photodensitometry	0.20	0.08	0.09	0.08	0.09	0.01	0.29	0.30	0.29	0.30	XXX
76078	TC	A	Photodensitometry	0.00	0.75	0.76	NA	NA	0.04	0.79	0.80	NA	NA	XXX
76080		A	X-ray exam of fistula	0.54	1.24	1.27	1.24	1.27	0.07	1.85	1.88	1.85	1.88	XXX
76080	26	A	X-ray exam of fistula	0.54	0.19	0.21	0.19	0.21	0.02	0.75	0.77	0.75	0.77	XXX
76080	TC	A	X-ray exam of fistula	0.00	1.05	1.06	NA	NA	0.05	1.10	1.11	NA	NA	XXX
76086		A	X-ray of mammary duct	0.36	2.73	2.77	2.73	2.77	0.14	3.23	3.27	3.23	3.27	XXX
76086	26	A	X-ray of mammary duct	0.36	0.13	0.14	0.13	0.14	0.02	0.51	0.52	0.51	0.52	XXX
76086	TC	A	X-ray of mammary duct	0.00	2.60	2.63	NA	NA	0.12	2.72	2.75	NA	NA	XXX
76088		A	X-ray of mammary ducts	0.45	3.80	3.86	3.80	3.86	0.18	4.43	4.49	4.43	4.49	XXX
76088	26	A	X-ray of mammary ducts	0.45	0.16	0.18	0.16	0.18	0.02	0.63	0.65	0.63	0.65	XXX
76088	TC	A	X-ray of mammary ducts	0.00	3.64	3.68	NA	NA	0.16	3.80	3.84	NA	NA	XXX
76090		A	Mammogram, one breast	0.58	1.26	1.25	1.26	1.25	0.08	1.92	1.91	1.92	1.91	XXX
76090	26	A	Mammogram, one breast	0.58	0.21	0.19	0.21	0.19	0.03	0.82	0.80	0.82	0.80	XXX
76090	TC	A	Mammogram, one breast	0.00	1.05	1.06	NA	NA	0.05	1.10	1.11	NA	NA	XXX
76091		A	Mammogram, both breasts	0.69	1.55	1.55	1.55	1.55	0.09	2.33	2.33	2.33	2.33	XXX
76091	26	A	Mammogram, both breasts	0.69	0.25	0.24	0.25	0.24	0.03	0.97	0.96	0.97	0.96	XXX
76091	TC	A	Mammogram, both breasts	0.00	1.30	1.31	NA	NA	0.06	1.36	1.37	NA	NA	XXX
76092		X	Mammogram, screening	0.00	0.00	0.00	0.00	0.00	0.00	0.00	0.00	0.00	0.00	XXX
76093		A	Magnetic image, breast	1.63	18.07	18.31	18.07	18.31	0.83	20.53	20.77	20.53	20.77	XXX
76093	26	A	Magnetic image, breast	1.63	0.58	0.63	0.58	0.63	0.07	2.28	2.33	2.28	2.33	XXX
76093	TC	A	Magnetic image, breast	0.00	17.49	17.68	NA	NA	0.76	18.25	18.44	NA	NA	XXX
76094		A	Magnetic image, both breasts	1.63	24.32	24.62	24.32	24.62	1.10	27.05	27.35	27.05	27.35	XXX
76094	26	A	Magnetic image, both breasts	1.63	0.58	0.63	0.58	0.63	0.07	2.28	2.33	2.28	2.33	XXX
76094	TC	A	Magnetic image, both breasts	0.00	23.74	23.99	NA	NA	1.03	24.77	25.02	NA	NA	XXX
76095		A	Stereotactic breast biopsy	1.59	7.68	7.81	7.68	7.81	0.40	9.67	9.80	9.67	9.80	XXX
76095	26	A	Stereotactic breast biopsy	1.59	0.57	0.62	0.57	0.62	0.09	2.25	2.30	2.25	2.30	XXX
76095	TC	A	Stereotactic breast biopsy	0.00	7.11	7.19	NA	NA	0.31	7.42	7.50	NA	NA	XXX
76096		A	X-ray of needle wire, breast	0.56	1.50	1.53	1.50	1.53	0.09	2.15	2.18	2.15	2.18	XXX
76096	26	A	X-ray of needle wire, breast	0.56	0.20	0.22	0.20	0.22	0.03	0.79	0.81	0.79	0.81	XXX
76096	TC	A	X-ray of needle wire, breast	0.00	1.30	1.31	NA	NA	0.06	1.36	1.37	NA	NA	XXX
76098		A	X-ray exam, breast specimen	0.16	0.47	0.49	0.47	0.49	0.03	0.66	0.68	0.66	0.68	XXX
76098	26	A	X-ray exam, breast specimen	0.16	0.06	0.07	0.06	0.07	0.01	0.23	0.24	0.23	0.24	XXX
76098	TC	A	X-ray exam, breast specimen	0.00	0.41	0.42	NA	NA	0.02	0.43	0.44	NA	NA	XXX
76100		A	X-ray exam of body section	0.58	1.45	1.48	1.45	1.48	0.09	2.12	2.15	2.12	2.15	XXX
76100	26	A	X-ray exam of body section	0.58	0.21	0.23	0.21	0.23	0.03	0.82	0.84	0.82	0.84	XXX
76100	TC	A	X-ray exam of body section	0.00	1.24	1.25	NA	NA	0.06	1.30	1.31	NA	NA	XXX
76101		A	Complex body section x-ray	0.58	1.62	1.66	1.62	1.66	0.10	2.30	2.34	2.30	2.34	XXX
76101	26	A	Complex body section x-ray	0.58	0.21	0.23	0.21	0.23	0.03	0.82	0.84	0.82	0.84	XXX
76101	TC	A	Complex body section x-ray	0.00	1.41	1.43	NA	NA	0.07	1.48	1.50	NA	NA	XXX
76102		A	Complex body section x-rays	0.58	1.93	1.97	1.93	1.97	0.12	2.63	2.67	2.63	2.67	XXX
76102	26	A	Complex body section x-rays	0.58	0.21	0.23	0.21	0.23	0.03	0.82	0.84	0.82	0.84	XXX
76102	TC	A	Complex body section x-rays	0.00	1.72	1.74	NA	NA	0.09	1.81	1.83	NA	NA	XXX
76120		A	Cinematic x-rays	0.38	1.19	1.21	1.19	1.21	0.07	1.64	1.66	1.64	1.66	XXX
76120	26	A	Cinematic x-rays	0.38	0.14	0.15	0.14	0.15	0.02	0.54	0.55	0.54	0.55	XXX
76120	TC	A	Cinematic x-rays	0.00	1.05	1.06	NA	NA	0.05	1.10	1.11	NA	NA	XXX
76125		A	Cinematic x-rays add-on	0.27	0.88	0.90	0.88	0.90	0.05	1.20	1.22	1.20	1.22	ZZZ
76125	26	A	Cinematic x-rays add-on	0.27	0.10	0.11	0.10	0.11	0.01	0.38	0.39	0.38	0.39	ZZZ
76125	TC	A	Cinematic x-rays add-on	0.00	0.78	0.79	NA	NA	0.04	0.82	0.83	NA	NA	ZZZ
76140		I	X-ray consultation	0.00	0.00	0.00	0.00	0.00	0.00	0.00	0.00	0.00	0.00	XXX
76150		A	X-ray exam, dry process	0.00	0.41	0.42	NA	NA	0.02	0.43	0.44	NA	NA	XXX
76350		C	Special x-ray contrast study	0.00	0.00	0.00	0.00	0.00	0.00	0.00	0.00	0.00	0.00	XXX
76355		A	CAT scan for localization	1.21	8.62	8.75	8.62	8.75	0.41	10.24	10.37	10.24	10.37	XXX
76355	26	A	CAT scan for localization	1.21	0.43	0.47	0.43	0.47	0.06	1.70	1.74	1.70	1.74	XXX
76355	TC	A	CAT scan for localization	0.00	8.19	8.28	NA	NA	0.35	8.54	8.63	NA	NA	XXX

[1] CPT codes and descriptions only are copyright 2000 American Medical Association. All Rights Reserved. Applicable FARS/DFARS Apply.
[2] Copyright 1994 American Dental Association. All rights reserved.
[3] + Indicates RVUs are not used for Medicare payment.
[4] PE RVUs = Practice Expense Relative Value Units.

ADDENDUM B.—RELATIVE VALUE UNITS (RVU'S) AND RELATED INFORMATION—Continued

CPT[1]/ HCPCS[2]	MOD	Status	Description	Physician Work RVUs[3]	Fully Implemented Non-Facility PE RVUs	Year 2001 Transitional Non-Facility PE RVUs	Fully Implemented Facility PE RVUs	Year 2001 Transitional Facility PE RVUs	Mal-Practice RVUs	Fully Implemented Non-Facility Total	Year 2001 Transitional Non-Facility Total	Fully Implemented Facility Total	Year 2001 Transitional Facility Total	Global
76360		A	CAT scan for needle biopsy	1.16	8.60	8.72	8.60	8.72	0.40	10.16	10.28	10.16	10.28	XXX
76360	26	A	CAT scan for needle biopsy	1.16	0.41	0.44	0.41	0.44	0.05	1.62	1.65	1.62	1.65	XXX
76360	TC	A	CAT scan for needle biopsy	0.00	8.19	8.28	NA	NA	0.35	8.54	8.63	NA	NA	XXX
76365		D	CAT scan for cyst aspiration	0.00	0.00	0.00	0.00	0.00	0.00	0.00	0.00	0.00	0.00	XXX
76365	26	D	CAT scan for cyst aspiration	0.00	0.00	0.00	0.00	0.00	0.00	0.00	0.00	0.00	0.00	XXX
76365	TC	D	CAT scan for cyst aspiration	0.00	0.00	0.00	NA	NA	0.00	0.00	0.00	NA	NA	XXX
76370		A	CAT scan for therapy guide	0.85	3.23	3.29	3.23	3.29	0.17	4.25	4.31	4.25	4.31	XXX
76370	26	A	CAT scan for therapy guide	0.85	0.30	0.33	0.30	0.33	0.04	1.19	1.22	1.19	1.22	XXX
76370	TC	A	CAT scan for therapy guide	0.00	2.93	2.96	NA	NA	0.13	3.06	3.09	NA	NA	XXX
76375		A	3d/holograph reconstr add-on	0.16	3.58	3.63	3.58	3.63	0.16	3.90	3.95	3.90	3.95	XXX
76375	26	A	3d/holograph reconstr add-on	0.16	0.06	0.07	0.06	0.07	0.01	0.23	0.24	0.23	0.24	XXX
76375	TC	A	3d/holograph reconstr add-on	0.00	3.52	3.56	NA	NA	0.15	3.67	3.71	NA	NA	XXX
76380		A	CAT scan follow-up study	0.98	3.83	3.90	3.83	3.90	0.19	5.00	5.07	5.00	5.07	XXX
76380	26	A	CAT scan follow-up study	0.98	0.35	0.38	0.35	0.38	0.04	1.37	1.40	1.37	1.40	XXX
76380	TC	A	CAT scan follow-up study	0.00	3.48	3.52	NA	NA	0.15	3.63	3.67	NA	NA	XXX
76390		A	Mr spectroscopy	1.40	11.63	11.81	11.63	11.81	0.55	13.58	13.76	13.58	13.76	XXX
76390	26	A	Mr spectroscopy	1.40	0.50	0.56	0.50	0.56	0.06	1.96	2.02	1.96	2.02	XXX
76390	TC	A	Mr spectroscopy	0.00	11.13	11.25	NA	NA	0.49	11.62	11.74	NA	NA	XXX
76393		A	Mr guidance for needle place	1.50	11.66	11.66	11.66	11.66	0.52	13.68	13.68	13.68	13.68	XXX
76393	26	A	Mr guidance for needle place	1.50	0.53	0.53	0.53	0.53	0.06	2.09	2.09	2.09	2.09	XXX
76393	TC	A	Mr guidance for needle place	0.00	11.13	11.13	NA	NA	0.46	11.59	11.59	NA	NA	XXX
76400		A	Magnetic image, bone marrow	1.60	11.70	11.87	11.70	11.87	0.56	13.86	14.03	13.86	14.03	XXX
76400	26	A	Magnetic image, bone marrow	1.60	0.57	0.62	0.57	0.62	0.07	2.24	2.29	2.24	2.29	XXX
76400	TC	A	Magnetic image, bone marrow	0.00	11.13	11.25	NA	NA	0.49	11.62	11.74	NA	NA	XXX
76499		C	Radiographic procedure	0.00	0.00	0.00	0.00	0.00	0.00	0.00	0.00	0.00	0.00	XXX
76499	26	C	Radiographic procedure	0.00	0.00	0.00	0.00	0.00	0.00	0.00	0.00	0.00	0.00	XXX
76499	TC	C	Radiographic procedure	0.00	0.00	0.00	0.00	0.00	0.00	0.00	0.00	0.00	0.00	XXX
76506		A	Echo exam of head	0.63	1.67	1.70	1.67	1.70	0.10	2.40	2.43	2.40	2.43	XXX
76506	26	A	Echo exam of head	0.63	0.26	0.27	0.26	0.27	0.03	0.92	0.93	0.92	0.93	XXX
76506	TC	A	Echo exam of head	0.00	1.41	1.43	NA	NA	0.07	1.48	1.50	NA	NA	XXX
76511		A	Echo exam of eye	0.94	1.78	1.73	1.78	1.73	0.08	2.80	2.75	2.80	2.75	XXX
76511	26	A	Echo exam of eye	0.94	0.44	0.40	0.44	0.40	0.02	1.40	1.36	1.40	1.36	XXX
76511	TC	A	Echo exam of eye	0.00	1.34	1.33	NA	NA	0.06	1.40	1.39	NA	NA	XXX
76512		A	Echo exam of eye	0.66	1.86	1.87	1.86	1.87	0.09	2.61	2.62	2.61	2.62	XXX
76512	26	A	Echo exam of eye	0.66	0.32	0.32	0.32	0.32	0.01	0.99	0.99	0.99	0.99	XXX
76512	TC	A	Echo exam of eye	0.00	1.54	1.55	NA	NA	0.08	1.62	1.63	NA	NA	XXX
76513		A	Echo exam of eye, water bath	0.66	2.28	2.19	2.28	2.19	0.09	3.03	2.94	3.03	2.94	XXX
76513	26	A	Echo exam of eye, water bath	0.66	0.33	0.33	0.33	0.33	0.01	1.00	1.00	1.00	1.00	XXX
76513	TC	A	Echo exam of eye, water bath	0.00	1.95	1.86	NA	NA	0.08	2.03	1.94	NA	NA	XXX
76516		A	Echo exam of eye	0.54	1.36	1.41	1.36	1.41	0.07	1.97	2.02	1.97	2.02	XXX
76516	26	A	Echo exam of eye	0.54	0.27	0.27	0.27	0.27	0.01	0.82	0.82	0.82	0.82	XXX
76516	TC	A	Echo exam of eye	0.00	1.09	1.14	NA	NA	0.06	1.15	1.20	NA	NA	XXX
76519		A	Echo exam of eye	0.54	1.51	1.52	1.51	1.52	0.07	2.12	2.13	2.12	2.13	XXX
76519	26	A	Echo exam of eye	0.54	0.27	0.27	0.27	0.27	0.01	0.82	0.82	0.82	0.82	XXX
76519	TC	A	Echo exam of eye	0.00	1.24	1.25	NA	NA	0.06	1.30	1.31	NA	NA	XXX
76529		A	Echo exam of eye	0.57	2.04	1.95	2.04	1.95	0.08	2.69	2.60	2.69	2.60	XXX
76529	26	A	Echo exam of eye	0.57	0.27	0.27	0.27	0.27	0.01	0.85	0.85	0.85	0.85	XXX
76529	TC	A	Echo exam of eye	0.00	1.77	1.68	NA	NA	0.07	1.84	1.75	NA	NA	XXX
76536		A	Echo exam of head and neck	0.56	1.61	1.65	1.61	1.65	0.09	2.26	2.30	2.26	2.30	XXX
76536	26	A	Echo exam of head and neck	0.56	0.20	0.22	0.20	0.22	0.02	0.78	0.80	0.78	0.80	XXX
76536	TC	A	Echo exam of head and neck	0.00	1.41	1.43	NA	NA	0.07	1.48	1.50	NA	NA	XXX
76604		A	Echo exam of chest	0.55	1.50	1.53	1.50	1.53	0.08	2.13	2.16	2.13	2.16	XXX
76604	26	A	Echo exam of chest	0.55	0.20	0.22	0.20	0.22	0.02	0.77	0.79	0.77	0.79	XXX
76604	TC	A	Echo exam of chest	0.00	1.30	1.31	NA	NA	0.06	1.36	1.37	NA	NA	XXX
76645		A	Echo exam of breast(s)	0.54	1.24	1.27	1.24	1.27	0.08	1.86	1.89	1.86	1.89	XXX
76645	26	A	Echo exam of breast(s)	0.54	0.19	0.21	0.19	0.21	0.03	0.76	0.78	0.76	0.78	XXX
76645	TC	A	Echo exam of breast(s)	0.00	1.05	1.06	NA	NA	0.05	1.10	1.11	NA	NA	XXX
76700		A	Echo exam of abdomen	0.81	2.25	2.30	2.25	2.30	0.13	3.19	3.24	3.19	3.24	XXX
76700	26	A	Echo exam of abdomen	0.81	0.29	0.32	0.29	0.32	0.04	1.14	1.17	1.14	1.17	XXX
76700	TC	A	Echo exam of abdomen	0.00	1.96	1.98	NA	NA	0.09	2.05	2.07	NA	NA	XXX
76705		A	Echo exam of abdomen	0.59	1.62	1.66	1.62	1.66	0.10	2.31	2.35	2.31	2.35	XXX
76705	26	A	Echo exam of abdomen	0.59	0.21	0.23	0.21	0.23	0.03	0.83	0.85	0.83	0.85	XXX
76705	TC	A	Echo exam of abdomen	0.00	1.41	1.43	NA	NA	0.07	1.48	1.50	NA	NA	XXX
76770		A	Echo exam abdomen back wall	0.74	2.22	2.27	2.22	2.27	0.12	3.08	3.13	3.08	3.13	XXX
76770	26	A	Echo exam abdomen back wall	0.74	0.26	0.29	0.26	0.29	0.03	1.03	1.06	1.03	1.06	XXX
76770	TC	A	Echo exam abdomen back wall	0.00	1.96	1.98	NA	NA	0.09	2.05	2.07	NA	NA	XXX
76775		A	Echo exam abdomen back wall	0.58	1.62	1.66	1.62	1.66	0.10	2.30	2.34	2.30	2.34	XXX
76775	26	A	Echo exam abdomen back wall	0.58	0.21	0.23	0.21	0.23	0.03	0.82	0.84	0.82	0.84	XXX
76775	TC	A	Echo exam abdomen back wall	0.00	1.41	1.43	NA	NA	0.07	1.48	1.50	NA	NA	XXX
76778		A	Echo exam kidney transplant	0.74	2.22	2.27	2.22	2.27	0.12	3.08	3.13	3.08	3.13	XXX
76778	26	A	Echo exam kidney transplant	0.74	0.26	0.29	0.26	0.29	0.03	1.03	1.06	1.03	1.06	XXX
76778	TC	A	Echo exam kidney transplant	0.00	1.96	1.98	NA	NA	0.09	2.05	2.07	NA	NA	XXX
76800		A	Echo exam spinal canal	1.13	1.74	1.81	1.74	1.81	0.11	2.98	3.05	2.98	3.05	XXX
76800	26	A	Echo exam spinal canal	1.13	0.33	0.38	0.33	0.38	0.04	1.50	1.55	1.50	1.55	XXX
76800	TC	A	Echo exam spinal canal	0.00	1.41	1.43	NA	NA	0.07	1.48	1.50	NA	NA	XXX
76805		A	Echo exam of pregnant uterus	0.99	2.44	2.49	2.44	2.49	0.14	3.57	3.62	3.57	3.62	XXX
76805	26	A	Echo exam of pregnant uterus	0.99	0.36	0.39	0.36	0.39	0.04	1.39	1.42	1.39	1.42	XXX
76805	TC	A	Echo exam of pregnant uterus	0.00	2.08	2.10	NA	NA	0.10	2.18	2.20	NA	NA	XXX
76810		A	Echo exam of pregnant uterus	1.97	4.90	5.00	4.90	5.00	0.25	7.12	7.22	7.12	7.22	XXX
76810	26	A	Echo exam of pregnant uterus	1.97	0.73	0.79	0.73	0.79	0.07	2.77	2.83	2.77	2.83	XXX
76810	TC	A	Echo exam of pregnant uterus	0.00	4.17	4.21	NA	NA	0.18	4.35	4.39	NA	NA	XXX
76815		A	Echo exam of pregnant uterus	0.65	1.65	1.69	1.65	1.69	0.09	2.39	2.43	2.39	2.43	XXX
76815	26	A	Echo exam of pregnant uterus	0.65	0.24	0.26	0.24	0.26	0.02	0.91	0.93	0.91	0.93	XXX

[1] CPT codes and descriptions only are copyright 2000 American Medical Association. All Rights Reserved. Applicable FARS/DFARS Apply.
[2] Copyright 1994 American Dental Association. All rights reserved.
[3] + Indicates RVUs are not used for Medicare payment.
[4] PE RVUs = Practice Expense Relative Value Units.

ADDENDUM B.—RELATIVE VALUE UNITS (RVU'S) AND RELATED INFORMATION—Continued

CPT[1]/ HCPCS[2]	MOD	Status	Description	Physician Work RVUs[3]	Fully Implemented Non-Facility PE RVUs	Year 2001 Transitional Non-Facility PE RVUs	Fully Implemented Facility PE RVUs	Year 2001 Transitional Facility PE RVUs	Mal-Practice RVUs	Fully Implemented Non-Facility Total	Year 2001 Transitional Non-Facility Total	Fully Implemented Facility Total	Year 2001 Transitional Facility Total	Global
76815	TC	A	Echo exam of pregnant uterus	0.00	1.41	1.43	NA	NA	0.07	1.48	1.50	NA	NA	XXX
76816		A	Echo exam follow-up/repeat	0.57	1.32	1.35	1.32	1.35	0.07	1.96	1.99	1.96	1.99	XXX
76816	26	A	Echo exam follow-up/repeat	0.57	0.22	0.24	0.22	0.24	0.02	0.81	0.83	0.81	0.83	XXX
76816	TC	A	Echo exam follow-up/repeat	0.00	1.10	1.11	NA	NA	0.05	1.15	1.16	NA	NA	XXX
76818		A	Fetl biophys profil w/stress	0.86	1.93	1.96	1.93	1.96	0.12	2.91	2.94	2.91	2.94	XXX
76818	26	A	Fetl biophys profil w/stress	0.86	0.33	0.34	0.33	0.34	0.04	1.23	1.24	1.23	1.24	XXX
76818	TC	A	Fetl biophys profil w/stress	0.00	1.60	1.62	NA	NA	0.08	1.68	1.70	NA	NA	XXX
76819		A	Fetl biophys profil w/o strs	0.63	1.84	1.84	1.84	1.84	0.11	2.58	2.58	2.58	2.58	XXX
76819	26	A	Fetl biophys profil w/o strs	0.63	0.24	0.24	0.24	0.24	0.03	0.90	0.90	0.90	0.90	XXX
76819	TC	A	Fetl biophys profil w/o strs	0.00	1.60	1.60	NA	NA	0.08	1.68	1.68	NA	NA	XXX
76825		A	Echo exam of fetal heart	1.67	2.57	2.53	2.57	2.53	0.15	4.39	4.35	4.39	4.35	XXX
76825	26	A	Echo exam of fetal heart	1.67	0.61	0.55	0.61	0.55	0.06	2.34	2.28	2.34	2.28	XXX
76825	TC	A	Echo exam of fetal heart	0.00	1.96	1.98	NA	NA	0.09	2.05	2.07	NA	NA	XXX
76826		A	Echo exam of fetal heart	0.83	1.00	1.12	1.00	1.12	0.07	1.90	2.02	1.90	2.02	XXX
76826	26	A	Echo exam of fetal heart	0.83	0.30	0.41	0.30	0.41	0.03	1.16	1.27	1.16	1.27	XXX
76826	TC	A	Echo exam of fetal heart	0.00	0.70	0.71	NA	NA	0.04	0.74	0.75	NA	NA	XXX
76827		A	Echo exam of fetal heart	0.58	1.93	2.07	1.93	2.07	0.12	2.63	2.77	2.63	2.77	XXX
76827	26	A	Echo exam of fetal heart	0.58	0.22	0.34	0.22	0.34	0.02	0.82	0.94	0.82	0.94	XXX
76827	TC	A	Echo exam of fetal heart	0.00	1.71	1.73	NA	NA	0.10	1.81	1.83	NA	NA	XXX
76828		A	Echo exam of fetal heart	0.56	1.32	1.35	1.32	1.35	0.09	1.97	2.00	1.97	2.00	XXX
76828	26	A	Echo exam of fetal heart	0.56	0.22	0.24	0.22	0.24	0.02	0.80	0.82	0.80	0.82	XXX
76828	TC	A	Echo exam of fetal heart	0.00	1.10	1.11	NA	NA	0.07	1.17	1.18	NA	NA	XXX
76830		A	Echo exam, transvaginal	0.69	1.76	1.81	1.76	1.81	0.11	2.56	2.61	2.56	2.61	XXX
76830	26	A	Echo exam, transvaginal	0.69	0.25	0.28	0.25	0.28	0.03	0.97	1.00	0.97	1.00	XXX
76830	TC	A	Echo exam, transvaginal	0.00	1.51	1.53	NA	NA	0.08	1.59	1.61	NA	NA	XXX
76831		A	Echo exam, uterus	0.72	1.78	1.82	1.78	1.82	0.10	2.60	2.64	2.60	2.64	XXX
76831	26	A	Echo exam, uterus	0.72	0.27	0.29	0.27	0.29	0.02	1.01	1.03	1.01	1.03	XXX
76831	TC	A	Echo exam, uterus	0.00	1.51	1.53	NA	NA	0.08	1.59	1.61	NA	NA	XXX
76856		A	Echo exam of pelvis	0.69	1.76	1.81	1.76	1.81	0.11	2.56	2.61	2.56	2.61	XXX
76856	26	A	Echo exam of pelvis	0.69	0.25	0.28	0.25	0.28	0.03	0.97	1.00	0.97	1.00	XXX
76856	TC	A	Echo exam of pelvis	0.00	1.51	1.53	NA	NA	0.08	1.59	1.61	NA	NA	XXX
76857		A	Echo exam of pelvis	0.38	1.18	1.20	1.18	1.20	0.07	1.63	1.65	1.63	1.65	XXX
76857	26	A	Echo exam of pelvis	0.38	0.13	0.14	0.13	0.14	0.02	0.53	0.54	0.53	0.54	XXX
76857	TC	A	Echo exam of pelvis	0.00	1.05	1.06	NA	NA	0.05	1.10	1.11	NA	NA	XXX
76870		A	Echo exam of scrotum	0.64	1.74	1.78	1.74	1.78	0.11	2.49	2.53	2.49	2.53	XXX
76870	26	A	Echo exam of scrotum	0.64	0.23	0.25	0.23	0.25	0.03	0.90	0.92	0.90	0.92	XXX
76870	TC	A	Echo exam of scrotum	0.00	1.51	1.53	NA	NA	0.08	1.59	1.61	NA	NA	XXX
76872		A	Echo exam, transrectal	0.69	1.75	1.80	1.75	1.80	0.12	2.56	2.61	2.56	2.61	XXX
76872	26	A	Echo exam, transrectal	0.69	0.24	0.27	0.24	0.27	0.04	0.97	1.00	0.97	1.00	XXX
76872	TC	A	Echo exam, transrectal	0.00	1.51	1.53	NA	NA	0.08	1.59	1.61	NA	NA	XXX
76873		A	Echograp trans r, pros study	1.55	2.61	2.61	2.61	2.61	0.21	4.37	4.37	4.37	4.37	XXX
76873	26	A	Echograp trans r, pros study	1.55	0.53	0.53	0.53	0.53	0.08	2.16	2.16	2.16	2.16	XXX
76873	TC	A	Echograp trans r, pros study	0.00	2.08	2.08	NA	NA	0.13	2.21	2.21	NA	NA	XXX
76880		A	Echo exam of extremity	0.59	1.62	1.66	1.62	1.66	0.10	2.31	2.35	2.31	2.35	XXX
76880	26	A	Echo exam of extremity	0.59	0.21	0.23	0.21	0.23	0.03	0.83	0.85	0.83	0.85	XXX
76880	TC	A	Echo exam of extremity	0.00	1.41	1.43	NA	NA	0.07	1.48	1.50	NA	NA	XXX
76885		A	Echo exam, infant hips	0.74	1.77	1.81	1.77	1.81	0.11	2.62	2.66	2.62	2.66	XXX
76885	26	A	Echo exam, infant hips	0.74	0.26	0.28	0.26	0.28	0.03	1.03	1.05	1.03	1.05	XXX
76885	TC	A	Echo exam, infant hips	0.00	1.51	1.53	NA	NA	0.08	1.59	1.61	NA	NA	XXX
76886		A	Echo exam, infant hips	0.62	1.63	1.67	1.63	1.67	0.10	2.35	2.39	2.35	2.39	XXX
76886	26	A	Echo exam, infant hips	0.62	0.22	0.24	0.22	0.24	0.03	0.87	0.89	0.87	0.89	XXX
76886	TC	A	Echo exam, infant hips	0.00	1.41	1.43	NA	NA	0.07	1.48	1.50	NA	NA	XXX
76930		A	Echo guide, cardiocentesis	0.67	1.79	1.83	1.79	1.83	0.10	2.56	2.60	2.56	2.60	XXX
76930	26	A	Echo guide, cardiocentesis	0.67	0.28	0.30	0.28	0.30	0.02	0.97	0.99	0.97	0.99	XXX
76930	TC	A	Echo guide, cardiocentesis	0.00	1.51	1.53	NA	NA	0.08	1.59	1.61	NA	NA	XXX
76932		A	Echo guide for heart biopsy	0.67	1.79	1.83	1.79	1.83	0.10	2.56	2.60	2.56	2.60	XXX
76932	26	A	Echo guide for heart biopsy	0.67	0.28	0.30	0.28	0.30	0.02	0.97	0.99	0.97	0.99	XXX
76932	TC	A	Echo guide for heart biopsy	0.00	1.51	1.53	NA	NA	0.08	1.59	1.61	NA	NA	XXX
76934		A	Echo guide for chest tap	0.67	1.75	1.80	1.75	1.80	0.11	2.53	2.58	2.53	2.58	XXX
76934	26	A	Echo guide for chest tap	0.67	0.24	0.27	0.24	0.27	0.03	0.94	0.97	0.94	0.97	XXX
76934	TC	A	Echo guide for chest tap	0.00	1.51	1.53	NA	NA	0.08	1.59	1.61	NA	NA	XXX
76936		A	Echo guide for artery repair	1.99	6.96	7.19	6.96	7.19	0.39	9.34	9.57	9.34	9.57	XXX
76936	26	A	Echo guide for artery repair	1.99	0.72	0.88	0.72	0.88	0.11	2.82	2.98	2.82	2.98	XXX
76936	TC	A	Echo guide for artery repair	0.00	6.24	6.31	NA	NA	0.28	6.52	6.59	NA	NA	XXX
76938		A	Echo exam for drainage	0.67	1.75	1.80	1.75	1.80	0.12	2.54	2.59	2.54	2.59	XXX
76938	26	A	Echo exam for drainage	0.67	0.24	0.27	0.24	0.27	0.04	0.95	0.98	0.95	0.98	XXX
76938	TC	A	Echo exam for drainage	0.00	1.51	1.53	NA	NA	0.08	1.59	1.61	NA	NA	XXX
76941		A	Echo guide for transfusion	1.34	2.02	2.08	2.02	2.08	0.13	3.49	3.55	3.49	3.55	XXX
76941	26	A	Echo guide for transfusion	1.34	0.50	0.54	0.50	0.54	0.06	1.90	1.94	1.90	1.94	XXX
76941	TC	A	Echo guide for transfusion	0.00	1.52	1.54	NA	NA	0.07	1.59	1.61	NA	NA	XXX
76942		A	Echo guide for biopsy	0.67	1.74	1.79	1.74	1.79	0.12	2.53	2.58	2.53	2.58	XXX
76942	26	A	Echo guide for biopsy	0.67	0.23	0.26	0.23	0.26	0.04	0.94	0.97	0.94	0.97	XXX
76942	TC	A	Echo guide for biopsy	0.00	1.51	1.53	NA	NA	0.08	1.59	1.61	NA	NA	XXX
76945		A	Echo guide, villus sampling	0.67	1.76	1.89	1.76	1.89	0.10	2.53	2.66	2.53	2.66	XXX
76945	26	A	Echo guide, villus sampling	0.67	0.24	0.35	0.24	0.35	0.03	0.94	1.05	0.94	1.05	XXX
76945	TC	A	Echo guide, villus sampling	0.00	1.52	1.54	NA	NA	0.07	1.59	1.61	NA	NA	XXX
76946		A	Echo guide for amniocentesis	0.38	1.65	1.68	1.65	1.68	0.09	2.12	2.15	2.12	2.15	XXX
76946	26	A	Echo guide for amniocentesis	0.38	0.14	0.15	0.14	0.15	0.01	0.53	0.54	0.53	0.54	XXX
76946	TC	A	Echo guide for amniocentesis	0.00	1.51	1.53	NA	NA	0.08	1.59	1.61	NA	NA	XXX
76948		A	Echo guide, ova aspiration	0.38	1.65	1.68	1.65	1.68	0.10	2.13	2.16	2.13	2.16	XXX
76948	26	A	Echo guide, ova aspiration	0.38	0.14	0.15	0.14	0.15	0.02	0.54	0.55	0.54	0.55	XXX
76948	TC	A	Echo guide, ova aspiration	0.00	1.51	1.53	NA	NA	0.08	1.59	1.61	NA	NA	XXX
76950		A	Echo guidance radiotherapy	0.58	1.50	1.53	1.50	1.53	0.09	2.17	2.20	2.17	2.20	XXX

[1] CPT codes and descriptions only are copyright 2000 American Medical Association. All Rights Reserved. Applicable FARS/DFARS Apply.
[2] Copyright 1994 American Dental Association. All rights reserved.
[3] + Indicates RVUs are not used for Medicare payment.
[4] PE RVUs = Practice Expense Relative Value Units.

ADDENDUM B.—RELATIVE VALUE UNITS (RVU'S) AND RELATED INFORMATION—Continued

CPT[1]/ HCPCS[2]	MOD	Status	Description	Physician Work RVUs[3]	Fully Implemented Non-Facility PE RVUs	Year 2001 Transitional Non-Facility PE RVUs	Fully Implemented Facility PE RVUs	Year 2001 Transitional Facility PE RVUs	Mal-Practice RVUs	Fully Implemented Non-Facility Total	Year 2001 Transitional Non-Facility Total	Fully Implemented Facility Total	Year 2001 Transitional Facility Total	Global
76950	26	A	Echo guidance radiotherapy	0.58	0.20	0.22	0.20	0.22	0.03	0.81	0.83	0.81	0.83	XXX
76950	TC	A	Echo guidance radiotherapy	0.00	1.30	1.31	NA	NA	0.06	1.36	1.37	NA	NA	XXX
76960		A	Echo guidance radiotherapy	0.58	1.50	1.53	1.50	1.53	0.09	2.17	2.20	2.17	2.20	XXX
76960	26	A	Echo guidance radiotherapy	0.58	0.20	0.22	0.20	0.22	0.03	0.81	0.83	0.81	0.83	XXX
76960	TC	A	Echo guidance radiotherapy	0.00	1.30	1.31	NA	NA	0.06	1.36	1.37	NA	NA	XXX
76965		A	Echo guidance radiotherapy	1.34	5.97	6.32	5.97	6.32	0.31	7.62	7.97	7.62	7.97	XXX
76965	26	A	Echo guidance radiotherapy	1.34	0.45	0.74	0.45	0.74	0.07	1.86	2.15	1.86	2.15	XXX
76965	TC	A	Echo guidance radiotherapy	0.00	5.52	5.58	NA	NA	0.24	5.76	5.82	NA	NA	XXX
76970		A	Ultrasound exam follow-up	0.40	1.19	1.22	1.19	1.22	0.07	1.66	1.69	1.66	1.69	XXX
76970	26	A	Ultrasound exam follow-up	0.40	0.14	0.16	0.14	0.16	0.02	0.56	0.58	0.56	0.58	XXX
76970	TC	A	Ultrasound exam follow-up	0.00	1.05	1.06	NA	NA	0.05	1.10	1.11	NA	NA	XXX
76975		A	GI endoscopic ultrasound	0.81	1.80	1.84	1.80	1.84	0.11	2.72	2.76	2.72	2.76	XXX
76975	26	A	GI endoscopic ultrasound	0.81	0.29	0.31	0.29	0.31	0.03	1.13	1.15	1.13	1.15	XXX
76975	TC	A	GI endoscopic ultrasound	0.00	1.51	1.53	NA	NA	0.08	1.59	1.61	NA	NA	XXX
76977		A	Us bone density measure	0.05	1.43	1.43	1.43	1.43	0.05	1.53	1.53	1.53	1.53	XXX
76977	26	A	Us bone density measure	0.05	0.02	0.02	0.02	0.02	0.01	0.08	0.08	0.08	0.08	XXX
76977	TC	A	Us bone density measure	0.00	1.41	1.41	NA	NA	0.04	1.45	1.45	NA	NA	XXX
76986		A	Ultrasound guide intraoper	1.20	3.03	3.10	3.03	3.10	0.19	4.42	4.49	4.42	4.49	XXX
76986	26	A	Ultrasound guide intraoper	1.20	0.43	0.47	0.43	0.47	0.07	1.70	1.74	1.70	1.74	XXX
76986	TC	A	Ultrasound guide intraoper	0.00	2.60	2.63	NA	NA	0.12	2.72	2.75	NA	NA	XXX
76999		C	Echo examination procedure	0.00	0.00	0.00	0.00	0.00	0.00	0.00	0.00	0.00	0.00	XXX
76999	26	C	Echo examination procedure	0.00	0.00	0.00	0.00	0.00	0.00	0.00	0.00	0.00	0.00	XXX
76999	TC	C	Echo examination procedure	0.00	0.00	0.00	0.00	0.00	0.00	0.00	0.00	0.00	0.00	XXX
77261		A	Radiation therapy planning	1.39	0.55	0.58	0.55	0.58	0.06	2.00	2.03	2.00	2.03	XXX
77262		A	Radiation therapy planning	2.11	0.82	0.87	0.82	0.87	0.09	3.02	3.07	3.02	3.07	XXX
77263		A	Radiation therapy planning	3.14	1.21	1.29	1.21	1.29	0.13	4.48	4.56	4.48	4.56	XXX
77280		A	Set radiation therapy field	0.70	3.70	3.77	3.70	3.77	0.18	4.58	4.65	4.58	4.65	XXX
77280	26	A	Set radiation therapy field	0.70	0.25	0.28	0.25	0.28	0.03	0.98	1.01	0.98	1.01	XXX
77280	TC	A	Set radiation therapy field	0.00	3.45	3.49	NA	NA	0.15	3.60	3.64	NA	NA	XXX
77285		A	Set radiation therapy field	1.05	5.89	5.98	5.89	5.98	0.29	7.23	7.32	7.23	7.32	XXX
77285	26	A	Set radiation therapy field	1.05	0.37	0.40	0.37	0.40	0.04	1.46	1.49	1.46	1.49	XXX
77285	TC	A	Set radiation therapy field	0.00	5.52	5.58	NA	NA	0.25	5.77	5.83	NA	NA	XXX
77290		A	Set radiation therapy field	1.56	7.01	7.13	7.01	7.13	0.35	8.92	9.04	8.92	9.04	XXX
77290	26	A	Set radiation therapy field	1.56	0.55	0.60	0.55	0.60	0.06	2.17	2.22	2.17	2.22	XXX
77290	TC	A	Set radiation therapy field	0.00	6.46	6.53	NA	NA	0.29	6.75	6.82	NA	NA	XXX
77295		A	Set radiation therapy field	4.57	29.34	29.79	29.34	29.79	1.41	35.32	35.77	35.32	35.77	XXX
77295	26	A	Set radiation therapy field	4.57	1.61	1.77	1.61	1.77	0.18	6.36	6.52	6.36	6.52	XXX
77295	TC	A	Set radiation therapy field	0.00	27.73	28.02	NA	NA	1.23	28.96	29.25	NA	NA	XXX
77299		C	Radiation therapy planning	0.00	0.00	0.00	0.00	0.00	0.00	0.00	0.00	0.00	0.00	XXX
77299	26	C	Radiation therapy planning	0.00	0.00	0.00	0.00	0.00	0.00	0.00	0.00	0.00	0.00	XXX
77299	TC	C	Radiation therapy planning	0.00	0.00	0.00	0.00	0.00	0.00	0.00	0.00	0.00	0.00	XXX
77300		A	Radiation therapy dose plan	0.62	1.56	1.59	1.56	1.59	0.09	2.27	2.30	2.27	2.30	XXX
77300	26	A	Radiation therapy dose plan	0.62	0.22	0.24	0.22	0.24	0.03	0.87	0.89	0.87	0.89	XXX
77300	TC	A	Radiation therapy dose plan	0.00	1.34	1.35	NA	NA	0.06	1.40	1.41	NA	NA	XXX
77305		A	Radiation therapy dose plan	0.70	2.09	2.14	2.09	2.14	0.12	2.91	2.96	2.91	2.96	XXX
77305	26	A	Radiation therapy dose plan	0.70	0.25	0.28	0.25	0.28	0.03	0.98	1.01	0.98	1.01	XXX
77305	TC	A	Radiation therapy dose plan	0.00	1.84	1.86	NA	NA	0.09	1.93	1.95	NA	NA	XXX
77310		A	Radiation therapy dose plan	1.05	2.69	2.74	2.69	2.74	0.15	3.89	3.94	3.89	3.94	XXX
77310	26	A	Radiation therapy dose plan	1.05	0.37	0.40	0.37	0.40	0.04	1.46	1.49	1.46	1.49	XXX
77310	TC	A	Radiation therapy dose plan	0.00	2.32	2.34	NA	NA	0.11	2.43	2.45	NA	NA	XXX
77315		A	Radiation therapy dose plan	1.56	3.19	3.27	3.19	3.27	0.18	4.93	5.01	4.93	5.01	XXX
77315	26	A	Radiation therapy dose plan	1.56	0.55	0.60	0.55	0.60	0.06	2.17	2.22	2.17	2.22	XXX
77315	TC	A	Radiation therapy dose plan	0.00	2.64	2.67	NA	NA	0.12	2.76	2.79	NA	NA	XXX
77321		A	Radiation therapy port plan	0.95	4.35	4.43	4.35	4.43	0.21	5.51	5.59	5.51	5.59	XXX
77321	26	A	Radiation therapy port plan	0.95	0.33	0.37	0.33	0.37	0.04	1.32	1.36	1.32	1.36	XXX
77321	TC	A	Radiation therapy port plan	0.00	4.02	4.06	NA	NA	0.17	4.19	4.23	NA	NA	XXX
77326		A	Radiation therapy dose plan	0.93	2.67	2.73	2.67	2.73	0.15	3.75	3.81	3.75	3.81	XXX
77326	26	A	Radiation therapy dose plan	0.93	0.33	0.36	0.33	0.36	0.04	1.30	1.33	1.30	1.33	XXX
77326	TC	A	Radiation therapy dose plan	0.00	2.34	2.37	NA	NA	0.11	2.45	2.48	NA	NA	XXX
77327		A	Radiation therapy dose plan	1.39	3.94	4.03	3.94	4.03	0.21	5.54	5.63	5.54	5.63	XXX
77327	26	A	Radiation therapy dose plan	1.39	0.49	0.54	0.49	0.54	0.06	1.94	1.99	1.94	1.99	XXX
77327	TC	A	Radiation therapy dose plan	0.00	3.45	3.49	NA	NA	0.15	3.60	3.64	NA	NA	XXX
77328		A	Radiation therapy dose plan	2.09	5.67	5.79	5.67	5.79	0.30	8.06	8.18	8.06	8.18	XXX
77328	26	A	Radiation therapy dose plan	2.09	0.74	0.81	0.74	0.81	0.09	2.92	2.99	2.92	2.99	XXX
77328	TC	A	Radiation therapy dose plan	0.00	4.93	4.98	NA	NA	0.21	5.14	5.19	NA	NA	XXX
77331		A	Special radiation dosimetry	0.87	0.81	0.85	0.81	0.85	0.06	1.74	1.78	1.74	1.78	XXX
77331	26	A	Special radiation dosimetry	0.87	0.31	0.34	0.31	0.34	0.04	1.22	1.25	1.22	1.25	XXX
77331	TC	A	Special radiation dosimetry	0.00	0.50	0.51	NA	NA	0.02	0.52	0.53	NA	NA	XXX
77332		A	Radiation treatment aid(s)	0.54	1.53	1.56	1.53	1.56	0.08	2.15	2.18	2.15	2.18	XXX
77332	26	A	Radiation treatment aid(s)	0.54	0.19	0.21	0.19	0.21	0.02	0.75	0.77	0.75	0.77	XXX
77332	TC	A	Radiation treatment aid(s)	0.00	1.34	1.35	NA	NA	0.06	1.40	1.41	NA	NA	XXX
77333		A	Radiation treatment aid(s)	0.84	2.18	2.23	2.18	2.23	0.13	3.15	3.20	3.15	3.20	XXX
77333	26	A	Radiation treatment aid(s)	0.84	0.30	0.33	0.30	0.33	0.04	1.18	1.21	1.18	1.21	XXX
77333	TC	A	Radiation treatment aid(s)	0.00	1.88	1.90	NA	NA	0.09	1.97	1.99	NA	NA	XXX
77334		A	Radiation treatment aid(s)	1.24	3.67	3.74	3.67	3.74	0.19	5.10	5.17	5.10	5.17	XXX
77334	26	A	Radiation treatment aid(s)	1.24	0.44	0.48	0.44	0.48	0.05	1.73	1.77	1.73	1.77	XXX
77334	TC	A	Radiation treatment aid(s)	0.00	3.23	3.26	NA	NA	0.14	3.37	3.40	NA	NA	XXX
77336		A	Radiation physics consult	0.00	2.96	2.99	NA	NA	0.13	3.09	3.12	NA	NA	XXX
77370		A	Radiation physics consult	0.00	3.47	3.51	NA	NA	0.15	3.62	3.66	NA	NA	XXX
77399		C	External radiation dosimetry	0.00	0.00	0.00	0.00	0.00	0.00	0.00	0.00	0.00	0.00	XXX
77399	26	C	External radiation dosimetry	0.00	0.00	0.00	0.00	0.00	0.00	0.00	0.00	0.00	0.00	XXX
77399	TC	C	External radiation dosimetry	0.00	0.00	0.00	0.00	0.00	0.00	0.00	0.00	0.00	0.00	XXX
77401		A	Radiation treatment delivery	0.00	1.76	1.78	NA	NA	0.09	1.85	1.87	NA	NA	XXX

[1] CPT codes and descriptions only are copyright 2000 American Medical Association. All Rights Reserved. Applicable FARS/DFARS Apply.
[2] Copyright 1994 American Dental Association. All rights reserved.
[3] + Indicates RVUs are not used for Medicare payment.
[4] PE RVUs = Practice Expense Relative Value Units.

ADDENDUM B.—RELATIVE VALUE UNITS (RVU'S) AND RELATED INFORMATION—Continued

CPT[1]/ HCPCS[2]	MOD	Status	Description	Physician Work RVUs[3]	Fully Implemented Non-Facility PE RVUs	Year 2001 Transitional Non-Facility PE RVUs	Fully Implemented Facility PE RVUs	Year 2001 Transitional Facility PE RVUs	Mal-Practice RVUs	Fully Implemented Non-Facility Total	Year 2001 Transitional Non-Facility Total	Fully Implemented Facility Total	Year 2001 Transitional Facility Total	Global
77402		A	Radiation treatment delivery	0.00	1.76	1.78	NA	NA	0.09	1.85	1.87	NA	NA	XXX
77403		A	Radiation treatment delivery	0.00	1.76	1.78	NA	NA	0.09	1.85	1.87	NA	NA	XXX
77404		A	Radiation treatment delivery	0.00	1.76	1.78	NA	NA	0.09	1.85	1.87	NA	NA	XXX
77406		A	Radiation treatment delivery	0.00	1.76	1.78	NA	NA	0.09	1.85	1.87	NA	NA	XXX
77407		A	Radiation treatment delivery	0.00	2.08	2.10	NA	NA	0.10	2.18	2.20	NA	NA	XXX
77408		A	Radiation treatment delivery	0.00	2.08	2.10	NA	NA	0.10	2.18	2.20	NA	NA	XXX
77409		A	Radiation treatment delivery	0.00	2.08	2.10	NA	NA	0.10	2.18	2.20	NA	NA	XXX
77411		A	Radiation treatment delivery	0.00	2.08	2.10	NA	NA	0.10	2.18	2.20	NA	NA	XXX
77412		A	Radiation treatment delivery	0.00	2.32	2.34	NA	NA	0.11	2.43	2.45	NA	NA	XXX
77413		A	Radiation treatment delivery	0.00	2.32	2.34	NA	NA	0.11	2.43	2.45	NA	NA	XXX
77414		A	Radiation treatment delivery	0.00	2.32	2.34	NA	NA	0.11	2.43	2.45	NA	NA	XXX
77416		A	Radiation treatment delivery	0.00	2.32	2.34	NA	NA	0.11	2.43	2.45	NA	NA	XXX
77417		A	Radiology port film(s)	0.00	0.59	0.60	NA	NA	0.03	0.62	0.63	NA	NA	XXX
77427		A	Radiation tx management, x5	3.31	1.17	1.17	1.17	1.17	0.14	4.62	4.62	4.62	4.62	XXX
77431		A	Radiation therapy management	1.81	0.73	0.77	0.73	0.77	0.07	2.61	2.65	2.61	2.65	XXX
77432		A	Stereotactic radiation trmt	7.93	3.21	3.75	3.21	3.75	0.33	11.47	12.01	11.47	12.01	XXX
77470		A	Special radiation treatment	2.09	11.80	11.99	11.80	11.99	0.58	14.47	14.66	14.47	14.66	XXX
77470	26	A	Special radiation treatment	2.09	0.73	0.80	0.73	0.80	0.09	2.91	2.98	2.91	2.98	XXX
77470	TC	A	Special radiation treatment	0.00	11.07	11.19	NA	NA	0.49	11.56	11.68	NA	NA	XXX
77499		C	Radiation therapy management	0.00	0.00	0.00	0.00	0.00	0.00	0.00	0.00	0.00	0.00	XXX
77499	26	C	Radiation therapy management	0.00	0.00	0.00	0.00	0.00	0.00	0.00	0.00	0.00	0.00	XXX
77499	TC	C	Radiation therapy management	0.00	0.00	0.00	0.00	0.00	0.00	0.00	0.00	0.00	0.00	XXX
77520		C	Proton trmt, simple w/o comp	0.00	0.00	0.00	0.00	0.00	0.00	0.00	0.00	0.00	0.00	XXX
77522		C	Proton trmt, simple w/comp	0.00	0.00	0.00	0.00	0.00	0.00	0.00	0.00	0.00	0.00	XXX
77523		C	Proton trmt, intermediate	0.00	0.00	0.00	0.00	0.00	0.00	0.00	0.00	0.00	0.00	XXX
77525		C	Proton treatment, complex	0.00	0.00	0.00	0.00	0.00	0.00	0.00	0.00	0.00	0.00	XXX
77600		R	Hyperthermia treatment	1.56	3.58	3.66	3.58	3.66	0.21	5.35	5.43	5.35	5.43	XXX
77600	26	R	Hyperthermia treatment	1.56	0.55	0.60	0.55	0.60	0.08	2.19	2.24	2.19	2.24	XXX
77600	TC	R	Hyperthermia treatment	0.00	3.03	3.06	NA	NA	0.13	3.16	3.19	NA	NA	XXX
77605		R	Hyperthermia treatment	2.09	4.77	4.88	4.77	4.88	0.31	7.17	7.28	7.17	7.28	XXX
77605	26	R	Hyperthermia treatment	2.09	0.73	0.80	0.73	0.80	0.13	2.95	3.02	2.95	3.02	XXX
77605	TC	R	Hyperthermia treatment	0.00	4.04	4.08	NA	NA	0.18	4.22	4.26	NA	NA	XXX
77610		R	Hyperthermia treatment	1.56	3.58	3.66	3.58	3.66	0.20	5.34	5.42	5.34	5.42	XXX
77610	26	R	Hyperthermia treatment	1.56	0.55	0.60	0.55	0.60	0.07	2.18	2.23	2.18	2.23	XXX
77610	TC	R	Hyperthermia treatment	0.00	3.03	3.06	NA	NA	0.13	3.16	3.19	NA	NA	XXX
77615		R	Hyperthermia treatment	2.09	4.77	4.88	4.77	4.88	0.27	7.13	7.24	7.13	7.24	XXX
77615	26	R	Hyperthermia treatment	2.09	0.73	0.80	0.73	0.80	0.09	2.91	2.98	2.91	2.98	XXX
77615	TC	R	Hyperthermia treatment	0.00	4.04	4.08	NA	NA	0.18	4.22	4.26	NA	NA	XXX
77620		R	Hyperthermia treatment	1.56	3.60	3.68	3.60	3.68	0.19	5.35	5.43	5.35	5.43	XXX
77620	26	R	Hyperthermia treatment	1.56	0.57	0.62	0.57	0.62	0.06	2.19	2.24	2.19	2.24	XXX
77620	TC	R	Hyperthermia treatment	0.00	3.03	3.06	NA	NA	0.13	3.16	3.19	NA	NA	XXX
77750		A	Infuse radioactive materials	4.91	3.06	3.19	3.06	3.19	0.23	8.20	8.33	8.20	8.33	090
77750	26	A	Infuse radioactive materials	4.91	1.73	1.85	1.73	1.85	0.17	6.81	6.93	6.81	6.93	090
77750	TC	A	Infuse radioactive materials	0.00	1.33	1.34	NA	NA	0.06	1.39	1.40	NA	NA	090
77761		A	Apply intrcav radiat simple	3.81	3.74	3.89	3.74	3.89	0.28	7.83	7.98	7.83	7.98	090
77761	26	A	Apply intrcav radiat simple	3.81	1.25	1.37	1.25	1.37	0.16	5.22	5.34	5.22	5.34	090
77761	TC	A	Apply intrcav radiat simple	0.00	2.49	2.52	NA	NA	0.12	2.61	2.64	NA	NA	090
77762		A	Apply intrcav radiat interm	5.72	5.62	5.80	5.62	5.80	0.38	11.72	11.90	11.72	11.90	090
77762	26	A	Apply intrcav radiat interm	5.72	2.04	2.18	2.04	2.18	0.22	7.98	8.12	7.98	8.12	090
77762	TC	A	Apply intrcav radiat interm	0.00	3.58	3.62	NA	NA	0.16	3.74	3.78	NA	NA	090
77763		A	Apply intrcav radiat compl	8.57	7.49	7.76	7.49	7.76	0.53	16.59	16.86	16.59	16.86	090
77763	26	A	Apply intrcav radiat compl	8.57	3.03	3.25	3.03	3.25	0.34	11.94	12.16	11.94	12.16	090
77763	TC	A	Apply intrcav radiat compl	0.00	4.46	4.51	NA	NA	0.19	4.65	4.70	NA	NA	090
77776		A	Apply interstit radiat simpl	4.66	3.30	3.60	3.30	3.60	0.35	8.31	8.61	8.31	8.61	XXX
77776	26	A	Apply interstit radiat simpl	4.66	1.14	1.42	1.14	1.42	0.24	6.04	6.32	6.04	6.32	XXX
77776	TC	A	Apply interstit radiat simpl	0.00	2.16	2.18	NA	NA	0.11	2.27	2.29	NA	NA	XXX
77777		A	Apply interstit radiat inter	7.48	6.86	7.09	6.86	7.09	0.50	14.84	15.07	14.84	15.07	090
77777	26	A	Apply interstit radiat inter	7.48	2.65	2.84	2.65	2.84	0.32	10.45	10.64	10.45	10.64	090
77777	TC	A	Apply interstit radiat inter	0.00	4.21	4.25	NA	NA	0.18	4.39	4.43	NA	NA	090
77778		A	Apply iterstit radiat compl	11.19	9.01	9.36	9.01	9.36	0.69	20.89	21.24	20.89	21.24	090
77778	26	A	Apply iterstit radiat compl	11.19	3.91	4.21	3.91	4.21	0.47	15.57	15.87	15.57	15.87	090
77778	TC	A	Apply iterstit radiat compl	0.00	5.10	5.15	NA	NA	0.22	5.32	5.37	NA	NA	090
77781		A	High intensity brachytherapy	1.66	20.75	21.00	20.75	21.00	0.95	23.36	23.61	23.36	23.61	090
77781	26	A	High intensity brachytherapy	1.66	0.59	0.63	0.59	0.63	0.07	2.32	2.36	2.32	2.36	090
77781	TC	A	High intensity brachytherapy	0.00	20.16	20.37	NA	NA	0.88	21.04	21.25	NA	NA	090
77782		A	High intensity brachytherapy	2.49	21.04	21.32	21.04	21.32	0.98	24.51	24.79	24.51	24.79	090
77782	26	A	High intensity brachytherapy	2.49	0.88	0.95	0.88	0.95	0.10	3.47	3.54	3.47	3.54	090
77782	TC	A	High intensity brachytherapy	0.00	20.16	20.37	NA	NA	0.88	21.04	21.25	NA	NA	090
77783		A	High intensity brachytherapy	3.73	21.47	21.77	21.47	21.77	1.03	26.23	26.53	26.23	26.53	090
77783	26	A	High intensity brachytherapy	3.73	1.31	1.40	1.31	1.40	0.15	5.19	5.28	5.19	5.28	090
77783	TC	A	High intensity brachytherapy	0.00	20.16	20.37	NA	NA	0.88	21.04	21.25	NA	NA	090
77784		A	High intensity brachytherapy	5.61	22.13	22.48	22.13	22.48	1.10	28.84	29.19	28.84	29.19	090
77784	26	A	High intensity brachytherapy	5.61	1.97	2.11	1.97	2.11	0.22	7.80	7.94	7.80	7.94	090
77784	TC	A	High intensity brachytherapy	0.00	20.16	20.37	NA	NA	0.88	21.04	21.25	NA	NA	090
77789		A	Apply surface radiation	1.12	0.85	0.89	0.85	0.89	0.05	2.02	2.06	2.02	2.06	090
77789	26	A	Apply surface radiation	1.12	0.40	0.43	0.40	0.43	0.03	1.55	1.58	1.55	1.58	090
77789	TC	A	Apply surface radiation	0.00	0.45	0.46	NA	NA	0.02	0.47	0.48	NA	NA	090
77790		A	Radiation handling	1.05	0.87	0.91	0.87	0.91	0.06	1.98	2.02	1.98	2.02	XXX
77790	26	A	Radiation handling	1.05	0.37	0.40	0.37	0.40	0.04	1.46	1.49	1.46	1.49	XXX
77790	TC	A	Radiation handling	0.00	0.50	0.51	NA	NA	0.02	0.52	0.53	NA	NA	XXX
77799		C	Radium/radioisotope therapy	0.00	0.00	0.00	0.00	0.00	0.00	0.00	0.00	0.00	0.00	XXX
77799	26	C	Radium/radioisotope therapy	0.00	0.00	0.00	0.00	0.00	0.00	0.00	0.00	0.00	0.00	XXX
77799	TC	C	Radium/radioisotope therapy	0.00	0.00	0.00	0.00	0.00	0.00	0.00	0.00	0.00	0.00	XXX

[1] CPT codes and descriptions only are copyright 2000 American Medical Association. All Rights Reserved. Applicable FARS/DFARS Apply.
[2] Copyright 1994 American Dental Association. All rights reserved.
[3] + Indicates RVUs are not used for Medicare payment.
[4] PE RVUs = Practice Expense Relative Value Units.

ADDENDUM B.—RELATIVE VALUE UNITS (RVU'S) AND RELATED INFORMATION—Continued

CPT[1]/ HCPCS[2]	MOD	Status	Description	Physician Work RVUs[3]	Fully Implemented Non-Facility PE RVUs	Year 2001 Transitional Non-Facility PE RVUs	Fully Implemented Facility PE RVUs	Year 2001 Transitional Facility PE RVUs	Mal-Practice RVUs	Fully Implemented Non-Facility Total	Year 2001 Transitional Non-Facility Total	Fully Implemented Facility Total	Year 2001 Transitional Facility Total	Global
78000		A	Thyroid, single uptake	0.19	1.03	1.05	1.03	1.05	0.06	1.28	1.30	1.28	1.30	XXX
78000	26	A	Thyroid, single uptake	0.19	0.07	0.08	0.07	0.08	0.01	0.27	0.28	0.27	0.28	XXX
78000	TC	A	Thyroid, single uptake	0.00	0.96	0.97	NA	NA	0.05	1.01	1.02	NA	NA	XXX
78001		A	Thyroid, multiple uptakes	0.26	1.40	1.42	1.40	1.42	0.07	1.73	1.75	1.73	1.75	XXX
78001	26	A	Thyroid, multiple uptakes	0.26	0.10	0.11	0.10	0.11	0.01	0.37	0.38	0.37	0.38	XXX
78001	TC	A	Thyroid, multiple uptakes	0.00	1.30	1.31	NA	NA	0.06	1.36	1.37	NA	NA	XXX
78003		A	Thyroid suppress/stimul	0.33	1.08	1.10	1.08	1.10	0.06	1.47	1.49	1.47	1.49	XXX
78003	26	A	Thyroid suppress/stimul	0.33	0.12	0.13	0.12	0.13	0.01	0.46	0.47	0.46	0.47	XXX
78003	TC	A	Thyroid suppress/stimul	0.00	0.96	0.97	NA	NA	0.05	1.01	1.02	NA	NA	XXX
78006		A	Thyroid imaging with uptake	0.49	2.54	2.59	2.54	2.59	0.13	3.16	3.21	3.16	3.21	XXX
78006	26	A	Thyroid imaging with uptake	0.49	0.18	0.20	0.18	0.20	0.02	0.69	0.71	0.69	0.71	XXX
78006	TC	A	Thyroid imaging with uptake	0.00	2.36	2.39	NA	NA	0.11	2.47	2.50	NA	NA	XXX
78007		A	Thyroid image, mult uptakes	0.50	2.74	2.79	2.74	2.79	0.14	3.38	3.43	3.38	3.43	XXX
78007	26	A	Thyroid image, mult uptakes	0.50	0.18	0.20	0.18	0.20	0.02	0.70	0.72	0.70	0.72	XXX
78007	TC	A	Thyroid image, mult uptakes	0.00	2.56	2.59	NA	NA	0.12	2.68	2.71	NA	NA	XXX
78010		A	Thyroid imaging	0.39	1.95	1.98	1.95	1.98	0.11	2.45	2.48	2.45	2.48	XXX
78010	26	A	Thyroid imaging	0.39	0.14	0.15	0.14	0.15	0.02	0.55	0.56	0.55	0.56	XXX
78010	TC	A	Thyroid imaging	0.00	1.81	1.83	NA	NA	0.09	1.90	1.92	NA	NA	XXX
78011		A	Thyroid imaging with flow	0.45	2.56	2.61	2.56	2.61	0.13	3.14	3.19	3.14	3.19	XXX
78011	26	A	Thyroid imaging with flow	0.45	0.17	0.19	0.17	0.19	0.02	0.64	0.66	0.64	0.66	XXX
78011	TC	A	Thyroid imaging with flow	0.00	2.39	2.42	NA	NA	0.11	2.50	2.53	NA	NA	XXX
78015		A	Thyroid met imaging	0.67	2.80	2.86	2.80	2.86	0.15	3.62	3.68	3.62	3.68	XXX
78015	26	A	Thyroid met imaging	0.67	0.24	0.27	0.24	0.27	0.03	0.94	0.97	0.94	0.97	XXX
78015	TC	A	Thyroid met imaging	0.00	2.56	2.59	NA	NA	0.12	2.68	2.71	NA	NA	XXX
78016		A	Thyroid met imaging/studies	0.82	3.77	3.84	3.77	3.84	0.18	4.77	4.84	4.77	4.84	XXX
78016	26	A	Thyroid met imaging/studies	0.82	0.31	0.34	0.31	0.34	0.03	1.16	1.19	1.16	1.19	XXX
78016	TC	A	Thyroid met imaging/studies	0.00	3.46	3.50	NA	NA	0.15	3.61	3.65	NA	NA	XXX
78018		A	Thyroid met imaging, body	0.86	5.70	5.80	5.70	5.80	0.27	6.83	6.93	6.83	6.93	XXX
78018	26	A	Thyroid met imaging, body	0.86	0.32	0.36	0.32	0.36	0.03	1.21	1.25	1.21	1.25	XXX
78018	TC	A	Thyroid met imaging, body	0.00	5.38	5.44	NA	NA	0.24	5.62	5.68	NA	NA	XXX
78020		A	Thyroid met uptake	0.60	1.53	1.53	1.53	1.53	0.14	2.27	2.27	2.27	2.27	ZZZ
78020	26	A	Thyroid met uptake	0.60	0.23	0.23	0.23	0.23	0.02	0.85	0.85	0.85	0.85	ZZZ
78020	TC	A	Thyroid met uptake	0.00	1.30	1.30	NA	NA	0.12	1.42	1.42	NA	NA	ZZZ
78070		A	Parathyroid nuclear imaging	0.82	2.11	2.12	2.11	2.12	0.12	3.05	3.06	3.05	3.06	XXX
78070	26	A	Parathyroid nuclear imaging	0.82	0.30	0.29	0.30	0.29	0.03	1.15	1.14	1.15	1.14	XXX
78070	TC	A	Parathyroid nuclear imaging	0.00	1.81	1.83	NA	NA	0.09	1.90	1.92	NA	NA	XXX
78075		A	Adrenal nuclear imaging	0.74	5.66	5.74	5.66	5.74	0.27	6.67	6.75	6.67	6.75	XXX
78075	26	A	Adrenal nuclear imaging	0.74	0.28	0.30	0.28	0.30	0.03	1.05	1.07	1.05	1.07	XXX
78075	TC	A	Adrenal nuclear imaging	0.00	5.38	5.44	NA	NA	0.24	5.62	5.68	NA	NA	XXX
78099		C	Endocrine nuclear procedure	0.00	0.00	0.00	0.00	0.00	0.00	0.00	0.00	0.00	0.00	XXX
78099	26	C	Endocrine nuclear procedure	0.00	0.00	0.00	0.00	0.00	0.00	0.00	0.00	0.00	0.00	XXX
78099	TC	C	Endocrine nuclear procedure	0.00	0.00	0.00	0.00	0.00	0.00	0.00	0.00	0.00	0.00	XXX
78102		A	Bone marrow imaging, ltd	0.55	2.24	2.28	2.24	2.28	0.12	2.91	2.95	2.91	2.95	XXX
78102	26	A	Bone marrow imaging, ltd	0.55	0.21	0.23	0.21	0.23	0.02	0.78	0.80	0.78	0.80	XXX
78102	TC	A	Bone marrow imaging, ltd	0.00	2.03	2.05	NA	NA	0.10	2.13	2.15	NA	NA	XXX
78103		A	Bone marrow imaging, mult	0.75	3.43	3.48	3.43	3.48	0.17	4.35	4.40	4.35	4.40	XXX
78103	26	A	Bone marrow imaging, mult	0.75	0.28	0.30	0.28	0.30	0.03	1.06	1.08	1.06	1.08	XXX
78103	TC	A	Bone marrow imaging, mult	0.00	3.15	3.18	NA	NA	0.14	3.29	3.32	NA	NA	XXX
78104		A	Bone marrow imaging, body	0.80	4.33	4.40	4.33	4.40	0.21	5.34	5.41	5.34	5.41	XXX
78104	26	A	Bone marrow imaging, body	0.80	0.29	0.32	0.29	0.32	0.03	1.12	1.15	1.12	1.15	XXX
78104	TC	A	Bone marrow imaging, body	0.00	4.04	4.08	NA	NA	0.18	4.22	4.26	NA	NA	XXX
78110		A	Plasma volume, single	0.19	1.02	1.04	1.02	1.04	0.06	1.27	1.29	1.27	1.29	XXX
78110	26	A	Plasma volume, single	0.19	0.08	0.09	0.08	0.09	0.01	0.28	0.29	0.28	0.29	XXX
78110	TC	A	Plasma volume, single	0.00	0.94	0.95	NA	NA	0.05	0.99	1.00	NA	NA	XXX
78111		A	Plasma volume, multiple	0.22	2.64	2.68	2.64	2.68	0.13	2.99	3.03	2.99	3.03	XXX
78111	26	A	Plasma volume, multiple	0.22	0.08	0.09	0.08	0.09	0.01	0.31	0.32	0.31	0.32	XXX
78111	TC	A	Plasma volume, multiple	0.00	2.56	2.59	NA	NA	0.12	2.68	2.71	NA	NA	XXX
78120		A	Red cell mass, single	0.23	1.81	1.84	1.81	1.84	0.10	2.14	2.17	2.14	2.17	XXX
78120	26	A	Red cell mass, single	0.23	0.09	0.10	0.09	0.10	0.01	0.33	0.34	0.33	0.34	XXX
78120	TC	A	Red cell mass, single	0.00	1.72	1.74	NA	NA	0.09	1.81	1.83	NA	NA	XXX
78121		A	Red cell mass, multiple	0.32	3.01	3.05	3.01	3.05	0.13	3.46	3.50	3.46	3.50	XXX
78121	26	A	Red cell mass, multiple	0.32	0.12	0.13	0.12	0.13	0.01	0.45	0.46	0.45	0.46	XXX
78121	TC	A	Red cell mass, multiple	0.00	2.89	2.92	NA	NA	0.12	3.01	3.04	NA	NA	XXX
78122		A	Blood volume	0.45	4.74	4.80	4.74	4.80	0.22	5.41	5.47	5.41	5.47	XXX
78122	26	A	Blood volume	0.45	0.17	0.18	0.17	0.18	0.02	0.64	0.65	0.64	0.65	XXX
78122	TC	A	Blood volume	0.00	4.57	4.62	NA	NA	0.20	4.77	4.82	NA	NA	XXX
78130		A	Red cell survival study	0.61	3.06	3.11	3.06	3.11	0.15	3.82	3.87	3.82	3.87	XXX
78130	26	A	Red cell survival study	0.61	0.23	0.25	0.23	0.25	0.03	0.87	0.89	0.87	0.89	XXX
78130	TC	A	Red cell survival study	0.00	2.83	2.86	NA	NA	0.12	2.95	2.98	NA	NA	XXX
78135		A	Red cell survival kinetics	0.64	5.07	5.14	5.07	5.14	0.24	5.95	6.02	5.95	6.02	XXX
78135	26	A	Red cell survival kinetics	0.64	0.23	0.25	0.23	0.25	0.03	0.90	0.92	0.90	0.92	XXX
78135	TC	A	Red cell survival kinetics	0.00	4.84	4.89	NA	NA	0.21	5.05	5.10	NA	NA	XXX
78140		A	Red cell sequestration	0.61	4.13	4.19	4.13	4.19	0.20	4.94	5.00	4.94	5.00	XXX
78140	26	A	Red cell sequestration	0.61	0.22	0.24	0.22	0.24	0.03	0.86	0.88	0.86	0.88	XXX
78140	TC	A	Red cell sequestration	0.00	3.91	3.95	NA	NA	0.17	4.08	4.12	NA	NA	XXX
78160		A	Plasma iron turnover	0.33	3.79	3.83	3.79	3.83	0.19	4.31	4.35	4.31	4.35	XXX
78160	26	A	Plasma iron turnover	0.33	0.15	0.15	0.15	0.15	0.03	0.51	0.51	0.51	0.51	XXX
78160	TC	A	Plasma iron turnover	0.00	3.64	3.68	NA	NA	0.16	3.80	3.84	NA	NA	XXX
78162		A	Iron absorption exam	0.45	3.36	3.40	3.36	3.40	0.15	3.96	4.00	3.96	4.00	XXX
78162	26	A	Iron absorption exam	0.45	0.18	0.19	0.18	0.19	0.01	0.64	0.65	0.64	0.65	XXX
78162	TC	A	Iron absorption exam	0.00	3.18	3.21	NA	NA	0.14	3.32	3.35	NA	NA	XXX
78170		A	Red cell iron utilization	0.41	5.41	5.48	5.41	5.48	0.27	6.09	6.16	6.09	6.16	XXX
78170	26	A	Red cell iron utilization	0.41	0.15	0.16	0.15	0.16	0.04	0.60	0.61	0.60	0.61	XXX

[1] CPT codes and descriptions only are copyright 2000 American Medical Association. All Rights Reserved. Applicable FARS/DFARS Apply.
[2] Copyright 1994 American Dental Association. All rights reserved.
[3] + Indicates RVUs are not used for Medicare payment.
[4] PE RVUs = Practice Expense Relative Value Units.

ADDENDUM B.—RELATIVE VALUE UNITS (RVU'S) AND RELATED INFORMATION—Continued

CPT[1]/ HCPCS[2]	MOD	Status	Description	Physician Work RVUs[3]	Fully Implemented Non-Facility PE RVUs	Year 2001 Transitional Non-Facility PE RVUs	Fully Implemented Facility PE RVUs	Year 2001 Transitional Facility PE RVUs	Mal-Practice RVUs	Fully Implemented Non-Facility Total	Year 2001 Transitional Non-Facility Total	Fully Implemented Facility Total	Year 2001 Transitional Facility Total	Global
78170	TC	A	Red cell iron utilization	0.00	5.26	5.32	NA	NA	0.23	5.49	5.55	NA	NA	XXX
78172		C	Total body iron estimation	0.00	0.00	0.00	0.00	0.00	0.00	0.00	0.00	0.00	0.00	XXX
78172	26	A	Total body iron estimation	0.53	0.19	0.21	0.19	0.21	0.02	0.74	0.76	0.74	0.76	XXX
78172	TC	C	Total body iron estimation	0.00	0.00	0.00	0.00	0.00	0.00	0.00	0.00	0.00	0.00	XXX
78185		A	Spleen imaging	0.40	2.48	2.53	2.48	2.53	0.13	3.01	3.06	3.01	3.06	XXX
78185	26	A	Spleen imaging	0.40	0.14	0.16	0.14	0.16	0.02	0.56	0.58	0.56	0.58	XXX
78185	TC	A	Spleen imaging	0.00	2.34	2.37	NA	NA	0.11	2.45	2.48	NA	NA	XXX
78190		A	Platelet survival, kinetics	1.09	6.06	6.15	6.06	6.15	0.31	7.46	7.55	7.46	7.55	XXX
78190	26	A	Platelet survival, kinetics	1.09	0.39	0.42	0.39	0.42	0.06	1.54	1.57	1.54	1.57	XXX
78190	TC	A	Platelet survival, kinetics	0.00	5.67	5.73	NA	NA	0.25	5.92	5.98	NA	NA	XXX
78191		A	Platelet survival	0.61	7.50	7.60	7.50	7.60	0.34	8.45	8.55	8.45	8.55	XXX
78191	26	A	Platelet survival	0.61	0.22	0.24	0.22	0.24	0.03	0.86	0.88	0.86	0.88	XXX
78191	TC	A	Platelet survival	0.00	7.28	7.36	NA	NA	0.31	7.59	7.67	NA	NA	XXX
78195		A	Lymph system imaging	1.20	4.48	4.50	4.48	4.50	0.23	5.91	5.93	5.91	5.93	XXX
78195	26	A	Lymph system imaging	1.20	0.44	0.42	0.44	0.42	0.05	1.69	1.67	1.69	1.67	XXX
78195	TC	A	Lymph system imaging	0.00	4.04	4.08	NA	NA	0.18	4.22	4.26	NA	NA	XXX
78199		C	Blood/lymph nuclear exam	0.00	0.00	0.00	0.00	0.00	0.00	0.00	0.00	0.00	0.00	XXX
78199	26	C	Blood/lymph nuclear exam	0.00	0.00	0.00	0.00	0.00	0.00	0.00	0.00	0.00	0.00	XXX
78199	TC	C	Blood/lymph nuclear exam	0.00	0.00	0.00	0.00	0.00	0.00	0.00	0.00	0.00	0.00	XXX
78201		A	Liver imaging	0.44	2.50	2.54	2.50	2.54	0.13	3.07	3.11	3.07	3.11	XXX
78201	26	A	Liver imaging	0.44	0.16	0.17	0.16	0.17	0.02	0.62	0.63	0.62	0.63	XXX
78201	TC	A	Liver imaging	0.00	2.34	2.37	NA	NA	0.11	2.45	2.48	NA	NA	XXX
78202		A	Liver imaging with flow	0.51	3.05	3.10	3.05	3.10	0.14	3.70	3.75	3.70	3.75	XXX
78202	26	A	Liver imaging with flow	0.51	0.19	0.21	0.19	0.21	0.02	0.72	0.74	0.72	0.74	XXX
78202	TC	A	Liver imaging with flow	0.00	2.86	2.89	NA	NA	0.12	2.98	3.01	NA	NA	XXX
78205		A	Liver imaging (3D)	0.71	6.12	6.21	6.12	6.21	0.29	7.12	7.21	7.12	7.21	XXX
78205	26	A	Liver imaging (3D)	0.71	0.26	0.29	0.26	0.29	0.03	1.00	1.03	1.00	1.03	XXX
78205	TC	A	Liver imaging (3D)	0.00	5.86	5.92	NA	NA	0.26	6.12	6.18	NA	NA	XXX
78206		A	Liver image (3d) w/flow	0.96	6.22	6.22	6.22	6.22	0.13	7.31	7.31	7.31	7.31	XXX
78206	26	A	Liver image (3d) w/flow	0.96	0.36	0.36	0.36	0.36	0.04	1.36	1.36	1.36	1.36	XXX
78206	TC	A	Liver image (3d) w/flow	0.00	5.86	5.86	NA	NA	0.09	5.95	5.95	NA	NA	XXX
78215		A	Liver and spleen imaging	0.49	3.10	3.15	3.10	3.15	0.14	3.73	3.78	3.73	3.78	XXX
78215	26	A	Liver and spleen imaging	0.49	0.18	0.20	0.18	0.20	0.02	0.69	0.71	0.69	0.71	XXX
78215	TC	A	Liver and spleen imaging	0.00	2.92	2.95	NA	NA	0.12	3.04	3.07	NA	NA	XXX
78216		A	Liver & spleen image/flow	0.57	3.67	3.73	3.67	3.73	0.17	4.41	4.47	4.41	4.47	XXX
78216	26	A	Liver & spleen image/flow	0.57	0.21	0.23	0.21	0.23	0.02	0.80	0.82	0.80	0.82	XXX
78216	TC	A	Liver & spleen image/flow	0.00	3.46	3.50	NA	NA	0.15	3.61	3.65	NA	NA	XXX
78220		A	Liver function study	0.49	3.88	3.94	3.88	3.94	0.18	4.55	4.61	4.55	4.61	XXX
78220	26	A	Liver function study	0.49	0.18	0.20	0.18	0.20	0.02	0.69	0.71	0.69	0.71	XXX
78220	TC	A	Liver function study	0.00	3.70	3.74	NA	NA	0.16	3.86	3.90	NA	NA	XXX
78223		A	Hepatobiliary imaging	0.84	3.94	4.01	3.94	4.01	0.20	4.98	5.05	4.98	5.05	XXX
78223	26	A	Hepatobiliary imaging	0.84	0.30	0.33	0.30	0.33	0.04	1.18	1.21	1.18	1.21	XXX
78223	TC	A	Hepatobiliary imaging	0.00	3.64	3.68	NA	NA	0.16	3.80	3.84	NA	NA	XXX
78230		A	Salivary gland imaging	0.45	2.32	2.36	2.32	2.36	0.13	2.90	2.94	2.90	2.94	XXX
78230	26	A	Salivary gland imaging	0.45	0.16	0.18	0.16	0.18	0.02	0.63	0.65	0.63	0.65	XXX
78230	TC	A	Salivary gland imaging	0.00	2.16	2.18	NA	NA	0.11	2.27	2.29	NA	NA	XXX
78231		A	Serial salivary imaging	0.52	3.35	3.40	3.35	3.40	0.16	4.03	4.08	4.03	4.08	XXX
78231	26	A	Serial salivary imaging	0.52	0.20	0.22	0.20	0.22	0.02	0.74	0.76	0.74	0.76	XXX
78231	TC	A	Serial salivary imaging	0.00	3.15	3.18	NA	NA	0.14	3.29	3.32	NA	NA	XXX
78232		A	Salivary gland function exam	0.47	3.70	3.76	3.70	3.76	0.16	4.33	4.39	4.33	4.39	XXX
78232	26	A	Salivary gland function exam	0.47	0.18	0.20	0.18	0.20	0.01	0.66	0.68	0.66	0.68	XXX
78232	TC	A	Salivary gland function exam	0.00	3.52	3.56	NA	NA	0.15	3.67	3.71	NA	NA	XXX
78258		A	Esophageal motility study	0.74	3.13	3.19	3.13	3.19	0.15	4.02	4.08	4.02	4.08	XXX
78258	26	A	Esophageal motility study	0.74	0.27	0.30	0.27	0.30	0.03	1.04	1.07	1.04	1.07	XXX
78258	TC	A	Esophageal motility study	0.00	2.86	2.89	NA	NA	0.12	2.98	3.01	NA	NA	XXX
78261		A	Gastric mucosa imaging	0.69	4.34	4.40	4.34	4.40	0.21	5.24	5.30	5.24	5.30	XXX
78261	26	A	Gastric mucosa imaging	0.69	0.27	0.29	0.27	0.29	0.03	0.99	1.01	0.99	1.01	XXX
78261	TC	A	Gastric mucosa imaging	0.00	4.07	4.11	NA	NA	0.18	4.25	4.29	NA	NA	XXX
78262		A	Gastroesophageal reflux exam	0.68	4.49	4.55	4.49	4.55	0.21	5.38	5.44	5.38	5.44	XXX
78262	26	A	Gastroesophageal reflux exam	0.68	0.26	0.28	0.26	0.28	0.03	0.97	0.99	0.97	0.99	XXX
78262	TC	A	Gastroesophageal reflux exam	0.00	4.23	4.27	NA	NA	0.18	4.41	4.45	NA	NA	XXX
78264		A	Gastric emptying study	0.78	4.38	4.45	4.38	4.45	0.21	5.37	5.44	5.37	5.44	XXX
78264	26	A	Gastric emptying study	0.78	0.28	0.31	0.28	0.31	0.03	1.09	1.12	1.09	1.12	XXX
78264	TC	A	Gastric emptying study	0.00	4.10	4.14	NA	NA	0.18	4.28	4.32	NA	NA	XXX
78267		X	Breath tst attain/anal c-14	0.00	0.00	0.00	0.00	0.00	0.00	0.00	0.00	0.00	0.00	XXX
78268		X	Breath test analysis, c-14	0.00	0.00	0.00	0.00	0.00	0.00	0.00	0.00	0.00	0.00	XXX
78270		A	Vit B-12 absorption exam	0.20	1.61	1.64	1.61	1.64	0.09	1.90	1.93	1.90	1.93	XXX
78270	26	A	Vit B-12 absorption exam	0.20	0.07	0.08	0.07	0.08	0.01	0.28	0.29	0.28	0.29	XXX
78270	TC	A	Vit B-12 absorption exam	0.00	1.54	1.56	NA	NA	0.08	1.62	1.64	NA	NA	XXX
78271		A	Vit B-12 absorp exam, IF	0.20	1.70	1.73	1.70	1.73	0.09	1.99	2.02	1.99	2.02	XXX
78271	26	A	Vit B-12 absorp exam, IF	0.20	0.07	0.08	0.07	0.08	0.01	0.28	0.29	0.28	0.29	XXX
78271	TC	A	Vit B-12 absorp exam, IF	0.00	1.63	1.65	NA	NA	0.08	1.71	1.73	NA	NA	XXX
78272		A	Vit B-12 absorp, combined	0.27	2.41	2.44	2.41	2.44	0.12	2.80	2.83	2.80	2.83	XXX
78272	26	A	Vit B-12 absorp, combined	0.27	0.10	0.11	0.10	0.11	0.01	0.38	0.39	0.38	0.39	XXX
78272	TC	A	Vit B-12 absorp, combined	0.00	2.31	2.33	NA	NA	0.11	2.42	2.44	NA	NA	XXX
78278		A	Acute GI blood loss imaging	0.99	5.20	5.28	5.20	5.28	0.25	6.44	6.52	6.44	6.52	XXX
78278	26	A	Acute GI blood loss imaging	0.99	0.36	0.39	0.36	0.39	0.04	1.39	1.42	1.39	1.42	XXX
78278	TC	A	Acute GI blood loss imaging	0.00	4.84	4.89	NA	NA	0.21	5.05	5.10	NA	NA	XXX
78282		C	GI protein loss exam	0.00	0.00	0.00	0.00	0.00	0.00	0.00	0.00	0.00	0.00	XXX
78282	26	A	GI protein loss exam	0.38	0.14	0.15	0.14	0.15	0.02	0.54	0.55	0.54	0.55	XXX
78282	TC	C	GI protein loss exam	0.00	0.00	0.00	0.00	0.00	0.00	0.00	0.00	0.00	0.00	XXX
78290		A	Meckel's divert exam	0.68	3.27	3.33	3.27	3.33	0.16	4.11	4.17	4.11	4.17	XXX
78290	26	A	Meckel's divert exam	0.68	0.24	0.27	0.24	0.27	0.03	0.95	0.98	0.95	0.98	XXX

[1] CPT codes and descriptions only are copyright 2000 American Medical Association. All Rights Reserved. Applicable FARS/DFARS Apply.
[2] Copyright 1994 American Dental Association. All rights reserved.
[3] + Indicates RVUs are not used for Medicare payment.
[4] PE RVUs = Practice Expense Relative Value Units.

ADDENDUM B.—RELATIVE VALUE UNITS (RVU'S) AND RELATED INFORMATION—Continued

CPT[1]/ HCPCS[2]	MOD	Status	Description	Physician Work RVUs[3]	Fully Implemented Non-Facility PE RVUs	Year 2001 Transitional Non-Facility PE RVUs	Fully Implemented Facility PE RVUs	Year 2001 Transitional Facility PE RVUs	Mal-Practice RVUs	Fully Implemented Non-Facility Total	Year 2001 Transitional Non-Facility Total	Fully Implemented Facility Total	Year 2001 Transitional Facility Total	Global
78290	TC	A	Meckel's divert exam	0.00	3.03	3.06	NA	NA	0.13	3.16	3.19	NA	NA	XXX
78291		A	Leveen/shunt patency exam	0.88	3.37	3.43	3.37	3.43	0.17	4.42	4.48	4.42	4.48	XXX
78291	26	A	Leveen/shunt patency exam	0.88	0.32	0.35	0.32	0.35	0.04	1.24	1.27	1.24	1.27	XXX
78291	TC	A	Leveen/shunt patency exam	0.00	3.05	3.08	NA	NA	0.13	3.18	3.21	NA	NA	XXX
78299		C	GI nuclear procedure	0.00	0.00	0.00	0.00	0.00	0.00	0.00	0.00	0.00	0.00	XXX
78299	26	C	GI nuclear procedure	0.00	0.00	0.00	0.00	0.00	0.00	0.00	0.00	0.00	0.00	XXX
78299	TC	C	GI nuclear procedure	0.00	0.00	0.00	0.00	0.00	0.00	0.00	0.00	0.00	0.00	XXX
78300		A	Bone imaging, limited area	0.62	2.69	2.74	2.69	2.74	0.15	3.46	3.51	3.46	3.51	XXX
78300	26	A	Bone imaging, limited area	0.62	0.22	0.24	0.22	0.24	0.03	0.87	0.89	0.87	0.89	XXX
78300	TC	A	Bone imaging, limited area	0.00	2.47	2.50	NA	NA	0.12	2.59	2.62	NA	NA	XXX
78305		A	Bone imaging, multiple areas	0.83	3.94	4.01	3.94	4.01	0.19	4.96	5.03	4.96	5.03	XXX
78305	26	A	Bone imaging, multiple areas	0.83	0.30	0.33	0.30	0.33	0.03	1.16	1.19	1.16	1.19	XXX
78305	TC	A	Bone imaging, multiple areas	0.00	3.64	3.68	NA	NA	0.16	3.80	3.84	NA	NA	XXX
78306		A	Bone imaging, whole body	0.86	4.56	4.63	4.56	4.63	0.22	5.64	5.71	5.64	5.71	XXX
78306	26	A	Bone imaging, whole body	0.86	0.31	0.34	0.31	0.34	0.04	1.21	1.24	1.21	1.24	XXX
78306	TC	A	Bone imaging, whole body	0.00	4.25	4.29	NA	NA	0.18	4.43	4.47	NA	NA	XXX
78315		A	Bone imaging, 3 phase	1.02	5.12	5.20	5.12	5.20	0.25	6.39	6.47	6.39	6.47	XXX
78315	26	A	Bone imaging, 3 phase	1.02	0.37	0.40	0.37	0.40	0.04	1.43	1.46	1.43	1.46	XXX
78315	TC	A	Bone imaging, 3 phase	0.00	4.75	4.80	NA	NA	0.21	4.96	5.01	NA	NA	XXX
78320		A	Bone imaging (3D)	1.04	6.25	6.34	6.25	6.34	0.30	7.59	7.68	7.59	7.68	XXX
78320	26	A	Bone imaging (3D)	1.04	0.39	0.42	0.39	0.42	0.04	1.47	1.50	1.47	1.50	XXX
78320	TC	A	Bone imaging (3D)	0.00	5.86	5.92	NA	NA	0.26	6.12	6.18	NA	NA	XXX
78350		A	Bone mineral, single photon	0.22	0.83	0.85	0.83	0.85	0.05	1.10	1.12	1.10	1.12	XXX
78350	26	A	Bone mineral, single photon	0.22	0.08	0.09	0.08	0.09	0.01	0.31	0.32	0.31	0.32	XXX
78350	TC	A	Bone mineral, single photon	0.00	0.75	0.76	NA	NA	0.04	0.79	0.80	NA	NA	XXX
78351		N	Bone mineral, dual photon	+0.30	1.55	1.22	0.12	0.14	0.01	1.86	1.53	0.43	0.45	XXX
78399		C	Musculoskeletal nuclear exam	0.00	0.00	0.00	0.00	0.00	0.00	0.00	0.00	0.00	0.00	XXX
78399	26	C	Musculoskeletal nuclear exam	0.00	0.00	0.00	0.00	0.00	0.00	0.00	0.00	0.00	0.00	XXX
78399	TC	C	Musculoskeletal nuclear exam	0.00	0.00	0.00	0.00	0.00	0.00	0.00	0.00	0.00	0.00	XXX
78414		C	Non-imaging heart function	0.00	0.00	0.00	0.00	0.00	0.00	0.00	0.00	0.00	0.00	XXX
78414	26	A	Non-imaging heart function	0.45	0.17	0.18	0.17	0.18	0.02	0.64	0.65	0.64	0.65	XXX
78414	TC	C	Non-imaging heart function	0.00	0.00	0.00	0.00	0.00	0.00	0.00	0.00	0.00	0.00	XXX
78428		A	Cardiac shunt imaging	0.78	2.57	2.61	2.57	2.61	0.14	3.49	3.53	3.49	3.53	XXX
78428	26	A	Cardiac shunt imaging	0.78	0.33	0.35	0.33	0.35	0.03	1.14	1.16	1.14	1.16	XXX
78428	TC	A	Cardiac shunt imaging	0.00	2.24	2.26	NA	NA	0.11	2.35	2.37	NA	NA	XXX
78445		A	Vascular flow imaging	0.49	2.02	2.06	2.02	2.06	0.11	2.62	2.66	2.62	2.66	XXX
78445	26	A	Vascular flow imaging	0.49	0.18	0.20	0.18	0.20	0.02	0.69	0.71	0.69	0.71	XXX
78445	TC	A	Vascular flow imaging	0.00	1.84	1.86	NA	NA	0.09	1.93	1.95	NA	NA	XXX
78455		A	Venous thrombosis study	0.73	4.23	4.29	4.23	4.29	0.20	5.16	5.22	5.16	5.22	XXX
78455	26	A	Venous thrombosis study	0.73	0.27	0.29	0.27	0.29	0.03	1.03	1.05	1.03	1.05	XXX
78455	TC	A	Venous thrombosis study	0.00	3.96	4.00	NA	NA	0.17	4.13	4.17	NA	NA	XXX
78456		A	Acute venous thrombus image	1.00	4.33	4.33	4.33	4.33	0.28	5.61	5.61	5.61	5.61	XXX
78456	26	A	Acute venous thrombus image	1.00	0.37	0.37	0.37	0.37	0.04	1.41	1.41	1.41	1.41	XXX
78456	TC	A	Acute venous thrombus image	0.00	3.96	3.96	NA	NA	0.24	4.20	4.20	NA	NA	XXX
78457		A	Venous thrombosis imaging	0.77	2.92	2.98	2.92	2.98	0.15	3.84	3.90	3.84	3.90	XXX
78457	26	A	Venous thrombosis imaging	0.77	0.28	0.31	0.28	0.31	0.03	1.08	1.11	1.08	1.11	XXX
78457	TC	A	Venous thrombosis imaging	0.00	2.64	2.67	NA	NA	0.12	2.76	2.79	NA	NA	XXX
78458		A	Ven thrombosis images, bilat	0.90	4.34	4.40	4.34	4.40	0.20	5.44	5.50	5.44	5.50	XXX
78458	26	A	Ven thrombosis images, bilat	0.90	0.34	0.36	0.34	0.36	0.03	1.27	1.29	1.27	1.29	XXX
78458	TC	A	Ven thrombosis images, bilat	0.00	4.00	4.04	NA	NA	0.17	4.17	4.21	NA	NA	XXX
78459		I	Heart muscle imaging (PET)	0.00	0.00	0.00	0.00	0.00	0.00	0.00	0.00	0.00	0.00	XXX
78459	26	I	Heart muscle imaging (PET)	+1.88	0.75	0.93	0.75	0.93	0.08	2.71	2.89	2.71	2.89	XXX
78459	TC	I	Heart muscle imaging (PET)	0.00	0.00	0.00	0.00	0.00	0.00	0.00	0.00	0.00	0.00	XXX
78460		A	Heart muscle blood, single	0.86	2.66	2.72	2.66	2.72	0.14	3.66	3.72	3.66	3.72	XXX
78460	26	A	Heart muscle blood, single	0.86	0.32	0.35	0.32	0.35	0.03	1.21	1.24	1.21	1.24	XXX
78460	TC	A	Heart muscle blood, single	0.00	2.34	2.37	NA	NA	0.11	2.45	2.48	NA	NA	XXX
78461		A	Heart muscle blood, multiple	1.23	5.16	5.24	5.16	5.24	0.26	6.65	6.73	6.65	6.73	XXX
78461	26	A	Heart muscle blood, multiple	1.23	0.47	0.50	0.47	0.50	0.05	1.75	1.78	1.75	1.78	XXX
78461	TC	A	Heart muscle blood, multiple	0.00	4.69	4.74	NA	NA	0.21	4.90	4.95	NA	NA	XXX
78464		A	Heart image (3d), single	1.09	7.42	7.53	7.42	7.53	0.35	8.86	8.97	8.86	8.97	XXX
78464	26	A	Heart image (3d), single	1.09	0.41	0.44	0.41	0.44	0.04	1.54	1.57	1.54	1.57	XXX
78464	TC	A	Heart image (3d), single	0.00	7.01	7.09	NA	NA	0.31	7.32	7.40	NA	NA	XXX
78465		A	Heart image (3d), multiple	1.46	12.28	12.44	12.28	12.44	0.56	14.30	14.46	14.30	14.46	XXX
78465	26	A	Heart image (3d), multiple	1.46	0.57	0.61	0.57	0.61	0.05	2.08	2.12	2.08	2.12	XXX
78465	TC	A	Heart image (3d), multiple	0.00	11.71	11.83	NA	NA	0.51	12.22	12.34	NA	NA	XXX
78466		A	Heart infarct image	0.69	2.87	2.92	2.87	2.92	0.15	3.71	3.76	3.71	3.76	XXX
78466	26	A	Heart infarct image	0.69	0.27	0.29	0.27	0.29	0.03	0.99	1.01	0.99	1.01	XXX
78466	TC	A	Heart infarct image	0.00	2.60	2.63	NA	NA	0.12	2.72	2.75	NA	NA	XXX
78468		A	Heart infarct image (ef)	0.80	3.94	4.00	3.94	4.00	0.19	4.93	4.99	4.93	4.99	XXX
78468	26	A	Heart infarct image (ef)	0.80	0.30	0.32	0.30	0.32	0.03	1.13	1.15	1.13	1.15	XXX
78468	TC	A	Heart infarct image (ef)	0.00	3.64	3.68	NA	NA	0.16	3.80	3.84	NA	NA	XXX
78469		A	Heart infarct image (3D)	0.92	5.53	5.61	5.53	5.61	0.26	6.71	6.79	6.71	6.79	XXX
78469	26	A	Heart infarct image (3D)	0.92	0.34	0.37	0.34	0.37	0.03	1.29	1.32	1.29	1.32	XXX
78469	TC	A	Heart infarct image (3D)	0.00	5.19	5.24	NA	NA	0.23	5.42	5.47	NA	NA	XXX
78472		A	Gated heart, planar, single	0.98	5.84	5.93	5.84	5.93	0.29	7.11	7.20	7.11	7.20	XXX
78472	26	A	Gated heart, planar, single	0.98	0.37	0.40	0.37	0.40	0.04	1.39	1.42	1.39	1.42	XXX
78472	TC	A	Gated heart, planar, single	0.00	5.47	5.53	NA	NA	0.25	5.72	5.78	NA	NA	XXX
78473		A	Gated heart, multiple	1.47	8.75	8.88	8.75	8.88	0.40	10.62	10.75	10.62	10.75	XXX
78473	26	A	Gated heart, multiple	1.47	0.56	0.60	0.56	0.60	0.05	2.08	2.12	2.08	2.12	XXX
78473	TC	A	Gated heart, multiple	0.00	8.19	8.28	NA	NA	0.35	8.54	8.63	NA	NA	XXX
78478		A	Heart wall motion add-on	0.62	1.80	1.83	1.80	1.83	0.10	2.52	2.55	2.52	2.55	ZZZ
78478	26	A	Heart wall motion add-on	0.62	0.25	0.26	0.25	0.26	0.02	0.89	0.90	0.89	0.90	ZZZ
78478	TC	A	Heart wall motion add-on	0.00	1.55	1.57	NA	NA	0.08	1.63	1.65	NA	NA	ZZZ

[1] CPT codes and descriptions only are copyright 2000 American Medical Association. All Rights Reserved. Applicable FARS/DFARS Apply.
[2] Copyright 1994 American Dental Association. All rights reserved.
[3] + Indicates RVUs are not used for Medicare payment.
[4] PE RVUs = Practice Expense Relative Value Units.

ADDENDUM B.—RELATIVE VALUE UNITS (RVU'S) AND RELATED INFORMATION—Continued

CPT[1]/ HCPCS[2]	MOD	Status	Description	Physician Work RVUs[3]	Fully Implemented Non-Facility PE RVUs	Year 2001 Transitional Non-Facility PE RVUs	Fully Implemented Facility PE RVUs	Year 2001 Transitional Facility PE RVUs	Mal-Practice RVUs	Fully Implemented Non-Facility Total	Year 2001 Transitional Non-Facility Total	Fully Implemented Facility Total	Year 2001 Transitional Facility Total	Global
78480		A	Heart function add-on	0.62	1.80	1.83	1.80	1.83	0.10	2.52	2.55	2.52	2.55	ZZZ
78480	26	A	Heart function add-on	0.62	0.25	0.26	0.25	0.26	0.02	0.89	0.90	0.89	0.90	ZZZ
78480	TC	A	Heart function add-on	0.00	1.55	1.57	NA	NA	0.08	1.63	1.65	NA	NA	ZZZ
78481		A	Heart first pass, single	0.98	5.59	5.66	5.59	5.66	0.26	6.83	6.90	6.83	6.90	XXX
78481	26	A	Heart first pass, single	0.98	0.40	0.42	0.40	0.42	0.03	1.41	1.43	1.41	1.43	XXX
78481	TC	A	Heart first pass, single	0.00	5.19	5.24	NA	NA	0.23	5.42	5.47	NA	NA	XXX
78483		A	Heart first pass, multiple	1.47	8.40	8.51	8.40	8.51	0.39	10.26	10.37	10.26	10.37	XXX
78483	26	A	Heart first pass, multiple	1.47	0.59	0.62	0.59	0.62	0.05	2.11	2.14	2.11	2.14	XXX
78483	TC	A	Heart first pass, multiple	0.00	7.81	7.89	NA	NA	0.34	8.15	8.23	NA	NA	XXX
78491		I	Heart image (pet), single	0.00	0.00	0.00	0.00	0.00	0.00	0.00	0.00	0.00	0.00	XXX
78491	26	I	Heart image (pet), single	+1.50	0.60	0.81	0.60	0.81	0.05	2.15	2.36	2.15	2.36	XXX
78491	TC	I	Heart image (pet), single	0.00	0.00	0.00	0.00	0.00	0.00	0.00	0.00	0.00	0.00	XXX
78492		I	Heart image (pet), multiple	0.00	0.00	0.00	0.00	0.00	0.00	0.00	0.00	0.00	0.00	XXX
78492	26	I	Heart image (pet), multiple	+1.87	0.75	0.93	0.75	0.93	0.06	2.68	2.86	2.68	2.86	XXX
78492	TC	I	Heart image (pet), multiple	0.00	0.00	0.00	0.00	0.00	0.00	0.00	0.00	0.00	0.00	XXX
78494		A	Heart image, spect	1.19	7.46	7.46	7.46	7.46	0.29	8.94	8.94	8.94	8.94	XXX
78494	26	A	Heart image, spect	1.19	0.45	0.45	0.45	0.45	0.04	1.68	1.68	1.68	1.68	XXX
78494	TC	A	Heart image, spect	0.00	7.01	7.01	NA	NA	0.25	7.26	7.26	NA	NA	XXX
78496		A	Heart first pass add-on	0.50	7.21	7.21	7.21	7.21	0.27	7.98	7.98	7.98	7.98	ZZZ
78496	26	A	Heart first pass add-on	0.50	0.20	0.20	0.20	0.20	0.02	0.72	0.72	0.72	0.72	ZZZ
78496	TC	A	Heart first pass add-on	0.00	7.01	7.01	NA	NA	0.25	7.26	7.26	NA	NA	ZZZ
78499		C	Cardiovascular nuclear exam	0.00	0.00	0.00	0.00	0.00	0.00	0.00	0.00	0.00	0.00	XXX
78499	26	C	Cardiovascular nuclear exam	0.00	0.00	0.00	0.00	0.00	0.00	0.00	0.00	0.00	0.00	XXX
78499	TC	C	Cardiovascular nuclear exam	0.00	0.00	0.00	0.00	0.00	0.00	0.00	0.00	0.00	0.00	XXX
78580		A	Lung perfusion imaging	0.74	3.68	3.75	3.68	3.75	0.18	4.60	4.67	4.60	4.67	XXX
78580	26	A	Lung perfusion imaging	0.74	0.27	0.30	0.27	0.30	0.03	1.04	1.07	1.04	1.07	XXX
78580	TC	A	Lung perfusion imaging	0.00	3.41	3.45	NA	NA	0.15	3.56	3.60	NA	NA	XXX
78584		A	Lung V/Q image single breath	0.99	3.53	3.60	3.53	3.60	0.18	4.70	4.77	4.70	4.77	XXX
78584	26	A	Lung V/Q image single breath	0.99	0.35	0.39	0.35	0.39	0.04	1.38	1.42	1.38	1.42	XXX
78584	TC	A	Lung V/Q image single breath	0.00	3.18	3.21	NA	NA	0.14	3.32	3.35	NA	NA	XXX
78585		A	Lung V/Q imaging	1.09	5.98	6.07	5.98	6.07	0.30	7.37	7.46	7.37	7.46	XXX
78585	26	A	Lung V/Q imaging	1.09	0.39	0.42	0.39	0.42	0.05	1.53	1.56	1.53	1.56	XXX
78585	TC	A	Lung V/Q imaging	0.00	5.59	5.65	NA	NA	0.25	5.84	5.90	NA	NA	XXX
78586		A	Aerosol lung image, single	0.40	2.71	2.76	2.71	2.76	0.14	3.25	3.30	3.25	3.30	XXX
78586	26	A	Aerosol lung image, single	0.40	0.14	0.16	0.14	0.16	0.02	0.56	0.58	0.56	0.58	XXX
78586	TC	A	Aerosol lung image, single	0.00	2.57	2.60	NA	NA	0.12	2.69	2.72	NA	NA	XXX
78587		A	Aerosol lung image, multiple	0.49	2.97	3.02	2.97	3.02	0.14	3.60	3.65	3.60	3.65	XXX
78587	26	A	Aerosol lung image, multiple	0.49	0.18	0.20	0.18	0.20	0.02	0.69	0.71	0.69	0.71	XXX
78587	TC	A	Aerosol lung image, multiple	0.00	2.79	2.82	NA	NA	0.12	2.91	2.94	NA	NA	XXX
78588		A	Perfusion lung image	1.09	3.58	3.58	3.58	3.58	0.20	4.87	4.87	4.87	4.87	XXX
78588	26	A	Perfusion lung image	1.09	0.40	0.40	0.40	0.40	0.05	1.54	1.54	1.54	1.54	XXX
78588	TC	A	Perfusion lung image	0.00	3.18	3.18	NA	NA	0.15	3.33	3.33	NA	NA	XXX
78591		A	Vent image, 1 breath, 1 proj	0.40	2.97	3.02	2.97	3.02	0.14	3.51	3.56	3.51	3.56	XXX
78591	26	A	Vent image, 1 breath, 1 proj	0.40	0.14	0.16	0.14	0.16	0.02	0.56	0.58	0.56	0.58	XXX
78591	TC	A	Vent image, 1 breath, 1 proj	0.00	2.83	2.86	NA	NA	0.12	2.95	2.98	NA	NA	XXX
78593		A	Vent image, 1 proj, gas	0.49	3.61	3.67	3.61	3.67	0.17	4.27	4.33	4.27	4.33	XXX
78593	26	A	Vent image, 1 proj, gas	0.49	0.18	0.20	0.18	0.20	0.02	0.69	0.71	0.69	0.71	XXX
78593	TC	A	Vent image, 1 proj, gas	0.00	3.43	3.47	NA	NA	0.15	3.58	3.62	NA	NA	XXX
78594		A	Vent image, mult proj, gas	0.53	5.14	5.21	5.14	5.21	0.23	5.90	5.97	5.90	5.97	XXX
78594	26	A	Vent image, mult proj, gas	0.53	0.19	0.21	0.19	0.21	0.02	0.74	0.76	0.74	0.76	XXX
78594	TC	A	Vent image, mult proj, gas	0.00	4.95	5.00	NA	NA	0.21	5.16	5.21	NA	NA	XXX
78596		A	Lung differential function	1.27	7.47	7.59	7.47	7.59	0.36	9.10	9.22	9.10	9.22	XXX
78596	26	A	Lung differential function	1.27	0.46	0.50	0.46	0.50	0.05	1.78	1.82	1.78	1.82	XXX
78596	TC	A	Lung differential function	0.00	7.01	7.09	NA	NA	0.31	7.32	7.40	NA	NA	XXX
78599		C	Respiratory nuclear exam	0.00	0.00	0.00	0.00	0.00	0.00	0.00	0.00	0.00	0.00	XXX
78599	26	C	Respiratory nuclear exam	0.00	0.00	0.00	0.00	0.00	0.00	0.00	0.00	0.00	0.00	XXX
78599	TC	C	Respiratory nuclear exam	0.00	0.00	0.00	0.00	0.00	0.00	0.00	0.00	0.00	0.00	XXX
78600		A	Brain imaging, ltd static	0.44	3.02	3.07	3.02	3.07	0.14	3.60	3.65	3.60	3.65	XXX
78600	26	A	Brain imaging, ltd static	0.44	0.16	0.18	0.16	0.18	0.02	0.62	0.64	0.62	0.64	XXX
78600	TC	A	Brain imaging, ltd static	0.00	2.86	2.89	NA	NA	0.12	2.98	3.01	NA	NA	XXX
78601		A	Brain imaging, ltd w/ flow	0.51	3.57	3.63	3.57	3.63	0.17	4.25	4.31	4.25	4.31	XXX
78601	26	A	Brain imaging, ltd w/ flow	0.51	0.19	0.21	0.19	0.21	0.02	0.72	0.74	0.72	0.74	XXX
78601	TC	A	Brain imaging, ltd w/ flow	0.00	3.38	3.42	NA	NA	0.15	3.53	3.57	NA	NA	XXX
78605		A	Brain imaging, complete	0.53	3.58	3.64	3.58	3.64	0.17	4.28	4.34	4.28	4.34	XXX
78605	26	A	Brain imaging, complete	0.53	0.20	0.22	0.20	0.22	0.02	0.75	0.77	0.75	0.77	XXX
78605	TC	A	Brain imaging, complete	0.00	3.38	3.42	NA	NA	0.15	3.53	3.57	NA	NA	XXX
78606		A	Brain imaging, compl w/flow	0.64	4.07	4.13	4.07	4.13	0.20	4.91	4.97	4.91	4.97	XXX
78606	26	A	Brain imaging, compl w/flow	0.64	0.23	0.25	0.23	0.25	0.03	0.90	0.92	0.90	0.92	XXX
78606	TC	A	Brain imaging, compl w/flow	0.00	3.84	3.88	NA	NA	0.17	4.01	4.05	NA	NA	XXX
78607		A	Brain imaging (3D)	1.23	6.96	7.06	6.96	7.06	0.34	8.53	8.63	8.53	8.63	XXX
78607	26	A	Brain imaging (3D)	1.23	0.46	0.49	0.46	0.49	0.05	1.74	1.77	1.74	1.77	XXX
78607	TC	A	Brain imaging (3D)	0.00	6.50	6.57	NA	NA	0.29	6.79	6.86	NA	NA	XXX
78608		N	Brain imaging (PET)	0.00	0.00	0.00	0.00	0.00	0.00	0.00	0.00	0.00	0.00	XXX
78609		N	Brain imaging (PET)	0.00	0.00	0.00	0.00	0.00	0.00	0.00	0.00	0.00	0.00	XXX
78610		A	Brain flow imaging only	0.30	1.68	1.71	1.68	1.71	0.09	2.07	2.10	2.07	2.10	XXX
78610	26	A	Brain flow imaging only	0.30	0.11	0.12	0.11	0.12	0.01	0.42	0.43	0.42	0.43	XXX
78610	TC	A	Brain flow imaging only	0.00	1.57	1.59	NA	NA	0.08	1.65	1.67	NA	NA	XXX
78615		A	Cerebral blood flow imaging	0.42	3.98	4.03	3.98	4.03	0.19	4.59	4.64	4.59	4.64	XXX
78615	26	A	Cerebral blood flow imaging	0.42	0.16	0.17	0.16	0.17	0.02	0.60	0.61	0.60	0.61	XXX
78615	TC	A	Cerebral blood flow imaging	0.00	3.82	3.86	NA	NA	0.17	3.99	4.03	NA	NA	XXX
78630		A	Cerebrospinal fluid scan	0.68	5.26	5.33	5.26	5.33	0.25	6.19	6.26	6.19	6.26	XXX
78630	26	A	Cerebrospinal fluid scan	0.68	0.25	0.27	0.25	0.27	0.03	0.96	0.98	0.96	0.98	XXX
78630	TC	A	Cerebrospinal fluid scan	0.00	5.01	5.06	NA	NA	0.22	5.23	5.28	NA	NA	XXX

[1] CPT codes and descriptions only are copyright 2000 American Medical Association. All Rights Reserved. Applicable FARS/DFARS Apply.
[2] Copyright 1994 American Dental Association. All rights reserved.
[3] + Indicates RVUs are not used for Medicare payment.
[4] PE RVUs = Practice Expense Relative Value Units.

ADDENDUM B.—RELATIVE VALUE UNITS (RVU'S) AND RELATED INFORMATION—Continued

CPT[1]/ HCPCS[2]	MOD	Status	Description	Physician Work RVUs[3]	Fully Implemented Non-Facility PE RVUs	Year 2001 Transitional Non-Facility PE RVUs	Fully Implemented Facility PE RVUs	Year 2001 Transitional Facility PE RVUs	Mal-Practice RVUs	Fully Implemented Non-Facility Total	Year 2001 Transitional Non-Facility Total	Fully Implemented Facility Total	Year 2001 Transitional Facility Total	Global
78635		A	CSF ventriculography	0.61	2.78	2.82	2.78	2.82	0.14	3.53	3.57	3.53	3.57	XXX
78635	26	A	CSF ventriculography	0.61	0.25	0.26	0.25	0.26	0.02	0.88	0.89	0.88	0.89	XXX
78635	TC	A	CSF ventriculography	0.00	2.53	2.56	NA	NA	0.12	2.65	2.68	NA	NA	XXX
78645		A	CSF shunt evaluation	0.57	3.62	3.68	3.62	3.68	0.17	4.36	4.42	4.36	4.42	XXX
78645	26	A	CSF shunt evaluation	0.57	0.21	0.23	0.21	0.23	0.02	0.80	0.82	0.80	0.82	XXX
78645	TC	A	CSF shunt evaluation	0.00	3.41	3.45	NA	NA	0.15	3.56	3.60	NA	NA	XXX
78647		A	Cerebrospinal fluid scan	0.90	6.21	6.29	6.21	6.29	0.29	7.40	7.48	7.40	7.48	XXX
78647	26	A	Cerebrospinal fluid scan	0.90	0.35	0.37	0.35	0.37	0.03	1.28	1.30	1.28	1.30	XXX
78647	TC	A	Cerebrospinal fluid scan	0.00	5.86	5.92	NA	NA	0.26	6.12	6.18	NA	NA	XXX
78650		A	CSF leakage imaging	0.61	4.84	4.91	4.84	4.91	0.22	5.67	5.74	5.67	5.74	XXX
78650	26	A	CSF leakage imaging	0.61	0.23	0.25	0.23	0.25	0.02	0.86	0.88	0.86	0.88	XXX
78650	TC	A	CSF leakage imaging	0.00	4.61	4.66	NA	NA	0.20	4.81	4.86	NA	NA	XXX
78660		A	Nuclear exam of tear flow	0.53	2.29	2.33	2.29	2.33	0.12	2.94	2.98	2.94	2.98	XXX
78660	26	A	Nuclear exam of tear flow	0.53	0.19	0.21	0.19	0.21	0.02	0.74	0.76	0.74	0.76	XXX
78660	TC	A	Nuclear exam of tear flow	0.00	2.10	2.12	NA	NA	0.10	2.20	2.22	NA	NA	XXX
78699		C	Nervous system nuclear exam	0.00	0.00	0.00	0.00	0.00	0.00	0.00	0.00	0.00	0.00	XXX
78699	26	C	Nervous system nuclear exam	0.00	0.00	0.00	0.00	0.00	0.00	0.00	0.00	0.00	0.00	XXX
78699	TC	C	Nervous system nuclear exam	0.00	0.00	0.00	0.00	0.00	0.00	0.00	0.00	0.00	0.00	XXX
78700		A	Kidney imaging, static	0.45	3.19	3.24	3.19	3.24	0.15	3.79	3.84	3.79	3.84	XXX
78700	26	A	Kidney imaging, static	0.45	0.16	0.18	0.16	0.18	0.02	0.63	0.65	0.63	0.65	XXX
78700	TC	A	Kidney imaging, static	0.00	3.03	3.06	NA	NA	0.13	3.16	3.19	NA	NA	XXX
78701		A	Kidney imaging with flow	0.49	3.72	3.78	3.72	3.78	0.17	4.38	4.44	4.38	4.44	XXX
78701	26	A	Kidney imaging with flow	0.49	0.18	0.20	0.18	0.20	0.02	0.69	0.71	0.69	0.71	XXX
78701	TC	A	Kidney imaging with flow	0.00	3.54	3.58	NA	NA	0.15	3.69	3.73	NA	NA	XXX
78704		A	Imaging renogram	0.74	4.20	4.27	4.20	4.27	0.20	5.14	5.21	5.14	5.21	XXX
78704	26	A	Imaging renogram	0.74	0.27	0.30	0.27	0.30	0.03	1.04	1.07	1.04	1.07	XXX
78704	TC	A	Imaging renogram	0.00	3.93	3.97	NA	NA	0.17	4.10	4.14	NA	NA	XXX
78707		A	Kidney flow/function image	0.96	4.79	4.87	4.79	4.87	0.23	5.98	6.06	5.98	6.06	XXX
78707	26	A	Kidney flow/function image	0.96	0.35	0.38	0.35	0.38	0.04	1.35	1.38	1.35	1.38	XXX
78707	TC	A	Kidney flow/function image	0.00	4.44	4.49	NA	NA	0.19	4.63	4.68	NA	NA	XXX
78708		A	Kidney flow/function image	1.21	4.88	4.94	4.88	4.94	0.24	6.33	6.39	6.33	6.39	XXX
78708	26	A	Kidney flow/function image	1.21	0.44	0.45	0.44	0.45	0.05	1.70	1.71	1.70	1.71	XXX
78708	TC	A	Kidney flow/function image	0.00	4.44	4.49	NA	NA	0.19	4.63	4.68	NA	NA	XXX
78709		A	Kidney flow/function image	1.41	4.95	4.99	4.95	4.99	0.25	6.61	6.65	6.61	6.65	XXX
78709	26	A	Kidney flow/function image	1.41	0.51	0.50	0.51	0.50	0.06	1.98	1.97	1.98	1.97	XXX
78709	TC	A	Kidney flow/function image	0.00	4.44	4.49	NA	NA	0.19	4.63	4.68	NA	NA	XXX
78710		A	Kidney imaging (3D)	0.66	6.10	6.18	6.10	6.18	0.29	7.05	7.13	7.05	7.13	XXX
78710	26	A	Kidney imaging (3D)	0.66	0.24	0.26	0.24	0.26	0.03	0.93	0.95	0.93	0.95	XXX
78710	TC	A	Kidney imaging (3D)	0.00	5.86	5.92	NA	NA	0.26	6.12	6.18	NA	NA	XXX
78715		A	Renal vascular flow exam	0.30	1.69	1.72	1.69	1.72	0.09	2.08	2.11	2.08	2.11	XXX
78715	26	A	Renal vascular flow exam	0.30	0.12	0.13	0.12	0.13	0.01	0.43	0.44	0.43	0.44	XXX
78715	TC	A	Renal vascular flow exam	0.00	1.57	1.59	NA	NA	0.08	1.65	1.67	NA	NA	XXX
78725		A	Kidney function study	0.38	1.91	1.94	1.91	1.94	0.10	2.39	2.42	2.39	2.42	XXX
78725	26	A	Kidney function study	0.38	0.14	0.15	0.14	0.15	0.01	0.53	0.54	0.53	0.54	XXX
78725	TC	A	Kidney function study	0.00	1.77	1.79	NA	NA	0.09	1.86	1.88	NA	NA	XXX
78730		A	Urinary bladder retention	0.36	1.58	1.61	1.58	1.61	0.09	2.03	2.06	2.03	2.06	XXX
78730	26	A	Urinary bladder retention	0.36	0.13	0.14	0.13	0.14	0.02	0.51	0.52	0.51	0.52	XXX
78730	TC	A	Urinary bladder retention	0.00	1.45	1.47	NA	NA	0.07	1.52	1.54	NA	NA	XXX
78740		A	Ureteral reflux study	0.57	2.30	2.34	2.30	2.34	0.12	2.99	3.03	2.99	3.03	XXX
78740	26	A	Ureteral reflux study	0.57	0.20	0.22	0.20	0.22	0.02	0.79	0.81	0.79	0.81	XXX
78740	TC	A	Ureteral reflux study	0.00	2.10	2.12	NA	NA	0.10	2.20	2.22	NA	NA	XXX
78760		A	Testicular imaging	0.66	2.90	2.95	2.90	2.95	0.15	3.71	3.76	3.71	3.76	XXX
78760	26	A	Testicular imaging	0.66	0.24	0.26	0.24	0.26	0.03	0.93	0.95	0.93	0.95	XXX
78760	TC	A	Testicular imaging	0.00	2.66	2.69	NA	NA	0.12	2.78	2.81	NA	NA	XXX
78761		A	Testicular imaging/flow	0.71	3.44	3.50	3.44	3.50	0.17	4.32	4.38	4.32	4.38	XXX
78761	26	A	Testicular imaging/flow	0.71	0.26	0.29	0.26	0.29	0.03	1.00	1.03	1.00	1.03	XXX
78761	TC	A	Testicular imaging/flow	0.00	3.18	3.21	NA	NA	0.14	3.32	3.35	NA	NA	XXX
78799		C	Genitourinary nuclear exam	0.00	0.00	0.00	0.00	0.00	0.00	0.00	0.00	0.00	0.00	XXX
78799	26	C	Genitourinary nuclear exam	0.00	0.00	0.00	0.00	0.00	0.00	0.00	0.00	0.00	0.00	XXX
78799	TC	C	Genitourinary nuclear exam	0.00	0.00	0.00	0.00	0.00	0.00	0.00	0.00	0.00	0.00	XXX
78800		A	Tumor imaging, limited area	0.66	3.62	3.68	3.62	3.68	0.18	4.46	4.52	4.46	4.52	XXX
78800	26	A	Tumor imaging, limited area	0.66	0.24	0.26	0.24	0.26	0.03	0.93	0.95	0.93	0.95	XXX
78800	TC	A	Tumor imaging, limited area	0.00	3.38	3.42	NA	NA	0.15	3.53	3.57	NA	NA	XXX
78801		A	Tumor imaging, mult areas	0.79	4.49	4.56	4.49	4.56	0.21	5.49	5.56	5.49	5.56	XXX
78801	26	A	Tumor imaging, mult areas	0.79	0.29	0.32	0.29	0.32	0.03	1.11	1.14	1.11	1.14	XXX
78801	TC	A	Tumor imaging, mult areas	0.00	4.20	4.24	NA	NA	0.18	4.38	4.42	NA	NA	XXX
78802		A	Tumor imaging, whole body	0.86	5.81	5.90	5.81	5.90	0.28	6.95	7.04	6.95	7.04	XXX
78802	26	A	Tumor imaging, whole body	0.86	0.32	0.35	0.32	0.35	0.03	1.21	1.24	1.21	1.24	XXX
78802	TC	A	Tumor imaging, whole body	0.00	5.49	5.55	NA	NA	0.25	5.74	5.80	NA	NA	XXX
78803		A	Tumor imaging (3D)	1.09	6.91	7.01	6.91	7.01	0.33	8.33	8.43	8.33	8.43	XXX
78803	26	A	Tumor imaging (3D)	1.09	0.41	0.44	0.41	0.44	0.04	1.54	1.57	1.54	1.57	XXX
78803	TC	A	Tumor imaging (3D)	0.00	6.50	6.57	NA	NA	0.29	6.79	6.86	NA	NA	XXX
78805		A	Abscess imaging, ltd area	0.73	3.65	3.71	3.65	3.71	0.18	4.56	4.62	4.56	4.62	XXX
78805	26	A	Abscess imaging, ltd area	0.73	0.27	0.29	0.27	0.29	0.03	1.03	1.05	1.03	1.05	XXX
78805	TC	A	Abscess imaging, ltd area	0.00	3.38	3.42	NA	NA	0.15	3.53	3.57	NA	NA	XXX
78806		A	Abscess imaging, whole body	0.86	6.70	6.79	6.70	6.79	0.32	7.88	7.97	7.88	7.97	XXX
78806	26	A	Abscess imaging, whole body	0.86	0.32	0.34	0.32	0.34	0.03	1.21	1.23	1.21	1.23	XXX
78806	TC	A	Abscess imaging, whole body	0.00	6.38	6.45	NA	NA	0.29	6.67	6.74	NA	NA	XXX
78807		A	Nuclear localization/abscess	1.09	6.92	7.02	6.92	7.02	0.33	8.34	8.44	8.34	8.44	XXX
78807	26	A	Nuclear localization/abscess	1.09	0.42	0.45	0.42	0.45	0.04	1.55	1.58	1.55	1.58	XXX
78807	TC	A	Nuclear localization/abscess	0.00	6.50	6.57	NA	NA	0.29	6.79	6.86	NA	NA	XXX
78810		N	Tumor imaging (PET)	0.00	0.00	0.00	0.00	0.00	0.00	0.00	0.00	0.00	0.00	XXX
78810	26	N	Tumor imaging (PET)	+1.93	0.77	0.95	0.77	0.95	0.09	2.79	2.97	2.79	2.97	XXX

[1] CPT codes and descriptions only are copyright 2000 American Medical Association. All Rights Reserved. Applicable FARS/DFARS Apply.
[2] Copyright 1994 American Dental Association. All rights reserved.
[3] + Indicates RVUs are not used for Medicare payment.
[4] PE RVUs = Practice Expense Relative Value Units.

ADDENDUM B.—RELATIVE VALUE UNITS (RVU'S) AND RELATED INFORMATION—Continued

CPT[1]/ HCPCS[2]	MOD	Status	Description	Physician Work RVUs[3]	Fully Implemented Non-Facility PE RVUs	Year 2001 Transitional Non-Facility PE RVUs	Fully Implemented Facility PE RVUs	Year 2001 Transitional Facility PE RVUs	Mal-Practice RVUs	Fully Implemented Non-Facility Total	Year 2001 Transitional Non-Facility Total	Fully Implemented Facility Total	Year 2001 Transitional Facility Total	Global
78810	TC	N	Tumor imaging (PET)	0.00	0.00	0.00	0.00	0.00	0.00	0.00	0.00	0.00	0.00	XXX
78890		B	Nuclear medicine data proc	+0.05	1.32	1.33	1.32	1.33	0.06	1.43	1.44	1.43	1.44	XXX
78890	26	B	Nuclear medicine data proc	+0.05	0.02	0.02	0.02	0.02	0.01	0.08	0.08	0.08	0.08	XXX
78890	TC	B	Nuclear medicine data proc	+0.00	1.30	1.31	NA	NA	0.05	1.35	1.36	NA	NA	XXX
78891		B	Nuclear med data proc	+0.10	2.64	2.67	2.64	2.67	0.12	2.86	2.89	2.86	2.89	XXX
78891	26	B	Nuclear med data proc	+0.10	0.04	0.04	0.04	0.04	0.01	0.15	0.15	0.15	0.15	XXX
78891	TC	B	Nuclear med data proc	+0.00	2.60	2.63	NA	NA	0.11	2.71	2.74	NA	NA	XXX
78990		I	Provide diag radionuclide(s)	0.00	0.00	0.00	0.00	0.00	0.00	0.00	0.00	0.00	0.00	XXX
78999		C	Nuclear diagnostic exam	0.00	0.00	0.00	0.00	0.00	0.00	0.00	0.00	0.00	0.00	XXX
78999	26	C	Nuclear diagnostic exam	0.00	0.00	0.00	0.00	0.00	0.00	0.00	0.00	0.00	0.00	XXX
78999	TC	C	Nuclear diagnostic exam	0.00	0.00	0.00	0.00	0.00	0.00	0.00	0.00	0.00	0.00	XXX
79000		A	Init hyperthyroid therapy	1.80	3.25	3.34	3.25	3.34	0.19	5.24	5.33	5.24	5.33	XXX
79000	26	A	Init hyperthyroid therapy	1.80	0.65	0.71	0.65	0.71	0.07	2.52	2.58	2.52	2.58	XXX
79000	TC	A	Init hyperthyroid therapy	0.00	2.60	2.63	NA	NA	0.12	2.72	2.75	NA	NA	XXX
79001		A	Repeat hyperthyroid therapy	1.05	1.68	1.72	1.68	1.72	0.10	2.83	2.87	2.83	2.87	XXX
79001	26	A	Repeat hyperthyroid therapy	1.05	0.38	0.41	0.38	0.41	0.04	1.47	1.50	1.47	1.50	XXX
79001	TC	A	Repeat hyperthyroid therapy	0.00	1.30	1.31	NA	NA	0.06	1.36	1.37	NA	NA	XXX
79020		A	Thyroid ablation	1.81	3.24	3.33	3.24	3.33	0.19	5.24	5.33	5.24	5.33	XXX
79020	26	A	Thyroid ablation	1.81	0.64	0.70	0.64	0.70	0.07	2.52	2.58	2.52	2.58	XXX
79020	TC	A	Thyroid ablation	0.00	2.60	2.63	NA	NA	0.12	2.72	2.75	NA	NA	XXX
79030		A	Thyroid ablation, carcinoma	2.10	3.37	3.46	3.37	3.46	0.20	5.67	5.76	5.67	5.76	XXX
79030	26	A	Thyroid ablation, carcinoma	2.10	0.77	0.83	0.77	0.83	0.08	2.95	3.01	2.95	3.01	XXX
79030	TC	A	Thyroid ablation, carcinoma	0.00	2.60	2.63	NA	NA	0.12	2.72	2.75	NA	NA	XXX
79035		A	Thyroid metastatic therapy	2.52	3.54	3.64	3.54	3.64	0.21	6.27	6.37	6.27	6.37	XXX
79035	26	A	Thyroid metastatic therapy	2.52	0.94	1.01	0.94	1.01	0.09	3.55	3.62	3.55	3.62	XXX
79035	TC	A	Thyroid metastatic therapy	0.00	2.60	2.63	NA	NA	0.12	2.72	2.75	NA	NA	XXX
79100		A	Hematopoetic nuclear therapy	1.32	3.09	3.16	3.09	3.16	0.17	4.58	4.65	4.58	4.65	XXX
79100	26	A	Hematopoetic nuclear therapy	1.32	0.49	0.53	0.49	0.53	0.05	1.86	1.90	1.86	1.90	XXX
79100	TC	A	Hematopoetic nuclear therapy	0.00	2.60	2.63	NA	NA	0.12	2.72	2.75	NA	NA	XXX
79200		A	Intracavitary nuclear trmt	1.99	3.35	3.44	3.35	3.44	0.19	5.53	5.62	5.53	5.62	XXX
79200	26	A	Intracavitary nuclear trmt	1.99	0.75	0.81	0.75	0.81	0.07	2.81	2.87	2.81	2.87	XXX
79200	TC	A	Intracavitary nuclear trmt	0.00	2.60	2.63	NA	NA	0.12	2.72	2.75	NA	NA	XXX
79300		C	Interstitial nuclear therapy	0.00	0.00	0.00	0.00	0.00	0.00	0.00	0.00	0.00	0.00	XXX
79300	26	A	Interstitial nuclear therapy	1.60	0.58	0.63	0.58	0.63	0.07	2.25	2.30	2.25	2.30	XXX
79300	TC	C	Interstitial nuclear therapy	0.00	0.00	0.00	0.00	0.00	0.00	0.00	0.00	0.00	0.00	XXX
79400		A	Nonhemato nuclear therapy	1.96	3.33	3.41	3.33	3.41	0.20	5.49	5.57	5.49	5.57	XXX
79400	26	A	Nonhemato nuclear therapy	1.96	0.73	0.78	0.73	0.78	0.08	2.77	2.82	2.77	2.82	XXX
79400	TC	A	Nonhemato nuclear therapy	0.00	2.60	2.63	NA	NA	0.12	2.72	2.75	NA	NA	XXX
79420		C	Intravascular nuclear ther	0.00	0.00	0.00	0.00	0.00	0.00	0.00	0.00	0.00	0.00	XXX
79420	26	A	Intravascular nuclear ther	1.51	0.54	0.59	0.54	0.59	0.06	2.11	2.16	2.11	2.16	XXX
79420	TC	C	Intravascular nuclear ther	0.00	0.00	0.00	0.00	0.00	0.00	0.00	0.00	0.00	0.00	XXX
79440		A	Nuclear joint therapy	1.99	3.40	3.47	3.40	3.47	0.20	5.59	5.66	5.59	5.66	XXX
79440	26	A	Nuclear joint therapy	1.99	0.80	0.84	0.80	0.84	0.08	2.87	2.91	2.87	2.91	XXX
79440	TC	A	Nuclear joint therapy	0.00	2.60	2.63	NA	NA	0.12	2.72	2.75	NA	NA	XXX
79900		C	Provide ther radiopharm(s)	0.00	0.00	0.00	0.00	0.00	0.00	0.00	0.00	0.00	0.00	XXX
79999		C	Nuclear medicine therapy	0.00	0.00	0.00	0.00	0.00	0.00	0.00	0.00	0.00	0.00	XXX
79999	26	C	Nuclear medicine therapy	0.00	0.00	0.00	0.00	0.00	0.00	0.00	0.00	0.00	0.00	XXX
79999	TC	C	Nuclear medicine therapy	0.00	0.00	0.00	0.00	0.00	0.00	0.00	0.00	0.00	0.00	XXX
80048		X	Basic metabolic panel	0.00	0.00	0.00	0.00	0.00	0.00	0.00	0.00	0.00	0.00	XXX
80050		N	General health panel	0.00	0.00	0.00	0.00	0.00	0.00	0.00	0.00	0.00	0.00	XXX
80051		X	Electrolyte panel	0.00	0.00	0.00	0.00	0.00	0.00	0.00	0.00	0.00	0.00	XXX
80053		X	Comprehen metabolic panel	0.00	0.00	0.00	0.00	0.00	0.00	0.00	0.00	0.00	0.00	XXX
80055		I	Obstetric panel	0.00	0.00	0.00	0.00	0.00	0.00	0.00	0.00	0.00	0.00	XXX
80061		X	Lipid panel	0.00	0.00	0.00	0.00	0.00	0.00	0.00	0.00	0.00	0.00	XXX
80069		X	Renal function panel	0.00	0.00	0.00	0.00	0.00	0.00	0.00	0.00	0.00	0.00	XXX
80072		X	Arthritis panel	0.00	0.00	0.00	0.00	0.00	0.00	0.00	0.00	0.00	0.00	XXX
80074		X	Acute hepatitis panel	0.00	0.00	0.00	0.00	0.00	0.00	0.00	0.00	0.00	0.00	XXX
80076		X	Hepatic function panel	0.00	0.00	0.00	0.00	0.00	0.00	0.00	0.00	0.00	0.00	XXX
80090		X	Torch antibody panel	0.00	0.00	0.00	0.00	0.00	0.00	0.00	0.00	0.00	0.00	XXX
80100		X	Drug screen, qualitate/multi	0.00	0.00	0.00	0.00	0.00	0.00	0.00	0.00	0.00	0.00	XXX
80101		X	Drug screen, single	0.00	0.00	0.00	0.00	0.00	0.00	0.00	0.00	0.00	0.00	XXX
80102		X	Drug confirmation	0.00	0.00	0.00	0.00	0.00	0.00	0.00	0.00	0.00	0.00	XXX
80103		X	Drug analysis, tissue prep	0.00	0.00	0.00	0.00	0.00	0.00	0.00	0.00	0.00	0.00	XXX
80150		X	Assay of amikacin	0.00	0.00	0.00	0.00	0.00	0.00	0.00	0.00	0.00	0.00	XXX
80152		X	Assay of amitriptyline	0.00	0.00	0.00	0.00	0.00	0.00	0.00	0.00	0.00	0.00	XXX
80154		X	Assay of benzodiazepines	0.00	0.00	0.00	0.00	0.00	0.00	0.00	0.00	0.00	0.00	XXX
80156		X	Assay, carbamazepine, total	0.00	0.00	0.00	0.00	0.00	0.00	0.00	0.00	0.00	0.00	XXX
80157		X	Assay, carbamazepine, free	0.00	0.00	0.00	0.00	0.00	0.00	0.00	0.00	0.00	0.00	XXX
80158		X	Assay of cyclosporine	0.00	0.00	0.00	0.00	0.00	0.00	0.00	0.00	0.00	0.00	XXX
80160		X	Assay of desipramine	0.00	0.00	0.00	0.00	0.00	0.00	0.00	0.00	0.00	0.00	XXX
80162		X	Assay of digoxin	0.00	0.00	0.00	0.00	0.00	0.00	0.00	0.00	0.00	0.00	XXX
80164		X	Assay, dipropylacetic acid	0.00	0.00	0.00	0.00	0.00	0.00	0.00	0.00	0.00	0.00	XXX
80166		X	Assay of doxepin	0.00	0.00	0.00	0.00	0.00	0.00	0.00	0.00	0.00	0.00	XXX
80168		X	Assay of ethosuximide	0.00	0.00	0.00	0.00	0.00	0.00	0.00	0.00	0.00	0.00	XXX
80170		X	Assay of gentamicin	0.00	0.00	0.00	0.00	0.00	0.00	0.00	0.00	0.00	0.00	XXX
80172		X	Assay of gold	0.00	0.00	0.00	0.00	0.00	0.00	0.00	0.00	0.00	0.00	XXX
80173		X	Assay of haloperidol	0.00	0.00	0.00	0.00	0.00	0.00	0.00	0.00	0.00	0.00	XXX
80174		X	Assay of imipramine	0.00	0.00	0.00	0.00	0.00	0.00	0.00	0.00	0.00	0.00	XXX
80176		X	Assay of lidocaine	0.00	0.00	0.00	0.00	0.00	0.00	0.00	0.00	0.00	0.00	XXX
80178		X	Assay of lithium	0.00	0.00	0.00	0.00	0.00	0.00	0.00	0.00	0.00	0.00	XXX
80182		X	Assay of nortriptyline	0.00	0.00	0.00	0.00	0.00	0.00	0.00	0.00	0.00	0.00	XXX
80184		X	Assay of phenobarbital	0.00	0.00	0.00	0.00	0.00	0.00	0.00	0.00	0.00	0.00	XXX
80185		X	Assay of phenytoin, total	0.00	0.00	0.00	0.00	0.00	0.00	0.00	0.00	0.00	0.00	XXX

[1] CPT codes and descriptions only are copyright 2000 American Medical Association. All Rights Reserved. Applicable FARS/DFARS Apply.
[2] Copyright 1994 American Dental Association. All rights reserved.
[3] + Indicates RVUs are not used for Medicare payment.
[4] PE RVUs = Practice Expense Relative Value Units.

ADDENDUM B.—RELATIVE VALUE UNITS (RVU'S) AND RELATED INFORMATION—Continued

CPT[1]/ HCPCS[2]	MOD	Status	Description	Physician Work RVUs[3]	Fully Implemented Non-Facility PE RVUs	Year 2001 Transitional Non-Facility PE RVUs	Fully Implemented Facility PE RVUs	Year 2001 Transitional Facility PE RVUs	Mal-Practice RVUs	Fully Implemented Non-Facility Total	Year 2001 Transitional Non-Facility Total	Fully Implemented Facility Total	Year 2001 Transitional Facility Total	Global
80186		X	Assay of phenytoin, free	0.00	0.00	0.00	0.00	0.00	0.00	0.00	0.00	0.00	0.00	XXX
80188		X	Assay of primidone	0.00	0.00	0.00	0.00	0.00	0.00	0.00	0.00	0.00	0.00	XXX
80190		X	Assay of procainamide	0.00	0.00	0.00	0.00	0.00	0.00	0.00	0.00	0.00	0.00	XXX
80192		X	Assay of procainamide	0.00	0.00	0.00	0.00	0.00	0.00	0.00	0.00	0.00	0.00	XXX
80194		X	Assay of quinidine	0.00	0.00	0.00	0.00	0.00	0.00	0.00	0.00	0.00	0.00	XXX
80196		X	Assay of salicylate	0.00	0.00	0.00	0.00	0.00	0.00	0.00	0.00	0.00	0.00	XXX
80197		X	Assay of tacrolimus	0.00	0.00	0.00	0.00	0.00	0.00	0.00	0.00	0.00	0.00	XXX
80198		X	Assay of theophylline	0.00	0.00	0.00	0.00	0.00	0.00	0.00	0.00	0.00	0.00	XXX
80200		X	Assay of tobramycin	0.00	0.00	0.00	0.00	0.00	0.00	0.00	0.00	0.00	0.00	XXX
80201		X	Assay of topiramate	0.00	0.00	0.00	0.00	0.00	0.00	0.00	0.00	0.00	0.00	XXX
80202		X	Assay of vancomycin	0.00	0.00	0.00	0.00	0.00	0.00	0.00	0.00	0.00	0.00	XXX
80299		X	Quantitative assay, drug	0.00	0.00	0.00	0.00	0.00	0.00	0.00	0.00	0.00	0.00	XXX
80400		X	Acth stimulation panel	0.00	0.00	0.00	0.00	0.00	0.00	0.00	0.00	0.00	0.00	XXX
80402		X	Acth stimulation panel	0.00	0.00	0.00	0.00	0.00	0.00	0.00	0.00	0.00	0.00	XXX
80406		X	Acth stimulation panel	0.00	0.00	0.00	0.00	0.00	0.00	0.00	0.00	0.00	0.00	XXX
80408		X	Aldosterone suppression eval	0.00	0.00	0.00	0.00	0.00	0.00	0.00	0.00	0.00	0.00	XXX
80410		X	Calcitonin stimul panel	0.00	0.00	0.00	0.00	0.00	0.00	0.00	0.00	0.00	0.00	XXX
80412		X	CRH stimulation panel	0.00	0.00	0.00	0.00	0.00	0.00	0.00	0.00	0.00	0.00	XXX
80414		X	Testosterone response	0.00	0.00	0.00	0.00	0.00	0.00	0.00	0.00	0.00	0.00	XXX
80415		X	Estradiol response panel	0.00	0.00	0.00	0.00	0.00	0.00	0.00	0.00	0.00	0.00	XXX
80416		X	Renin stimulation panel	0.00	0.00	0.00	0.00	0.00	0.00	0.00	0.00	0.00	0.00	XXX
80417		X	Renin stimulation panel	0.00	0.00	0.00	0.00	0.00	0.00	0.00	0.00	0.00	0.00	XXX
80418		X	Pituitary evaluation panel	0.00	0.00	0.00	0.00	0.00	0.00	0.00	0.00	0.00	0.00	XXX
80420		X	Dexamethasone panel	0.00	0.00	0.00	0.00	0.00	0.00	0.00	0.00	0.00	0.00	XXX
80422		X	Glucagon tolerance panel	0.00	0.00	0.00	0.00	0.00	0.00	0.00	0.00	0.00	0.00	XXX
80424		X	Glucagon tolerance panel	0.00	0.00	0.00	0.00	0.00	0.00	0.00	0.00	0.00	0.00	XXX
80426		X	Gonadotropin hormone panel	0.00	0.00	0.00	0.00	0.00	0.00	0.00	0.00	0.00	0.00	XXX
80428		X	Growth hormone panel	0.00	0.00	0.00	0.00	0.00	0.00	0.00	0.00	0.00	0.00	XXX
80430		X	Growth hormone panel	0.00	0.00	0.00	0.00	0.00	0.00	0.00	0.00	0.00	0.00	XXX
80432		X	Insulin suppression panel	0.00	0.00	0.00	0.00	0.00	0.00	0.00	0.00	0.00	0.00	XXX
80434		X	Insulin tolerance panel	0.00	0.00	0.00	0.00	0.00	0.00	0.00	0.00	0.00	0.00	XXX
80435		X	Insulin tolerance panel	0.00	0.00	0.00	0.00	0.00	0.00	0.00	0.00	0.00	0.00	XXX
80436		X	Metyrapone panel	0.00	0.00	0.00	0.00	0.00	0.00	0.00	0.00	0.00	0.00	XXX
80438		X	TRH stimulation panel	0.00	0.00	0.00	0.00	0.00	0.00	0.00	0.00	0.00	0.00	XXX
80439		X	TRH stimulation panel	0.00	0.00	0.00	0.00	0.00	0.00	0.00	0.00	0.00	0.00	XXX
80440		X	TRH stimulation panel	0.00	0.00	0.00	0.00	0.00	0.00	0.00	0.00	0.00	0.00	XXX
80500		A	Lab pathology consultation	0.37	0.18	0.19	0.16	0.18	0.01	0.56	0.57	0.54	0.56	XXX
80502		A	Lab pathology consultation	1.33	0.63	0.56	0.58	0.53	0.05	2.01	1.94	1.96	1.91	XXX
81000		X	Urinalysis, nonauto w/scope	0.00	0.00	0.00	0.00	0.00	0.00	0.00	0.00	0.00	0.00	XXX
81001		X	Urinalysis, auto w/scope	0.00	0.00	0.00	0.00	0.00	0.00	0.00	0.00	0.00	0.00	XXX
81002		X	Urinalysis nonauto w/o scope	0.00	0.00	0.00	0.00	0.00	0.00	0.00	0.00	0.00	0.00	XXX
81003		X	Urinalysis, auto, w/o scope	0.00	0.00	0.00	0.00	0.00	0.00	0.00	0.00	0.00	0.00	XXX
81005		X	Urinalysis	0.00	0.00	0.00	0.00	0.00	0.00	0.00	0.00	0.00	0.00	XXX
81007		X	Urine screen for bacteria	0.00	0.00	0.00	0.00	0.00	0.00	0.00	0.00	0.00	0.00	XXX
81015		X	Microscopic exam of urine	0.00	0.00	0.00	0.00	0.00	0.00	0.00	0.00	0.00	0.00	XXX
81020		X	Urinalysis, glass test	0.00	0.00	0.00	0.00	0.00	0.00	0.00	0.00	0.00	0.00	XXX
81025		X	Urine pregnancy test	0.00	0.00	0.00	0.00	0.00	0.00	0.00	0.00	0.00	0.00	XXX
81050		X	Urinalysis, volume measure	0.00	0.00	0.00	0.00	0.00	0.00	0.00	0.00	0.00	0.00	XXX
81099		X	Urinalysis test procedure	0.00	0.00	0.00	0.00	0.00	0.00	0.00	0.00	0.00	0.00	XXX
82000		X	Assay of blood acetaldehyde	0.00	0.00	0.00	0.00	0.00	0.00	0.00	0.00	0.00	0.00	XXX
82003		X	Assay of acetaminophen	0.00	0.00	0.00	0.00	0.00	0.00	0.00	0.00	0.00	0.00	XXX
82009		X	Test for acetone/ketones	0.00	0.00	0.00	0.00	0.00	0.00	0.00	0.00	0.00	0.00	XXX
82010		X	Acetone assay	0.00	0.00	0.00	0.00	0.00	0.00	0.00	0.00	0.00	0.00	XXX
82013		X	Acetylcholinesterase assay	0.00	0.00	0.00	0.00	0.00	0.00	0.00	0.00	0.00	0.00	XXX
82016		X	Acylcarnitines, qual	0.00	0.00	0.00	0.00	0.00	0.00	0.00	0.00	0.00	0.00	XXX
82017		X	Acylcarnitines, quant	0.00	0.00	0.00	0.00	0.00	0.00	0.00	0.00	0.00	0.00	XXX
82024		X	Assay of acth	0.00	0.00	0.00	0.00	0.00	0.00	0.00	0.00	0.00	0.00	XXX
82030		X	Assay of adp & amp	0.00	0.00	0.00	0.00	0.00	0.00	0.00	0.00	0.00	0.00	XXX
82040		X	Assay of serum albumin	0.00	0.00	0.00	0.00	0.00	0.00	0.00	0.00	0.00	0.00	XXX
82042		X	Assay of urine albumin	0.00	0.00	0.00	0.00	0.00	0.00	0.00	0.00	0.00	0.00	XXX
82043		X	Microalbumin, quantitative	0.00	0.00	0.00	0.00	0.00	0.00	0.00	0.00	0.00	0.00	XXX
82044		X	Microalbumin, semiquant	0.00	0.00	0.00	0.00	0.00	0.00	0.00	0.00	0.00	0.00	XXX
82055		X	Assay of ethanol	0.00	0.00	0.00	0.00	0.00	0.00	0.00	0.00	0.00	0.00	XXX
82075		X	Assay of breath ethanol	0.00	0.00	0.00	0.00	0.00	0.00	0.00	0.00	0.00	0.00	XXX
82085		X	Assay of aldolase	0.00	0.00	0.00	0.00	0.00	0.00	0.00	0.00	0.00	0.00	XXX
82088		X	Assay of aldosterone	0.00	0.00	0.00	0.00	0.00	0.00	0.00	0.00	0.00	0.00	XXX
82101		X	Assay of urine alkaloids	0.00	0.00	0.00	0.00	0.00	0.00	0.00	0.00	0.00	0.00	XXX
82103		X	Alpha-1-antitrypsin, total	0.00	0.00	0.00	0.00	0.00	0.00	0.00	0.00	0.00	0.00	XXX
82104		X	Alpha-1-antitrypsin, pheno	0.00	0.00	0.00	0.00	0.00	0.00	0.00	0.00	0.00	0.00	XXX
82105		X	Alpha-fetoprotein, serum	0.00	0.00	0.00	0.00	0.00	0.00	0.00	0.00	0.00	0.00	XXX
82106		X	Alpha-fetoprotein, amniotic	0.00	0.00	0.00	0.00	0.00	0.00	0.00	0.00	0.00	0.00	XXX
82108		X	Assay of aluminum	0.00	0.00	0.00	0.00	0.00	0.00	0.00	0.00	0.00	0.00	XXX
82120		X	Amines, vaginal fluid qual	0.00	0.00	0.00	0.00	0.00	0.00	0.00	0.00	0.00	0.00	XXX
82127		X	Amino acid, single qual	0.00	0.00	0.00	0.00	0.00	0.00	0.00	0.00	0.00	0.00	XXX
82128		X	Amino acids, mult qual	0.00	0.00	0.00	0.00	0.00	0.00	0.00	0.00	0.00	0.00	XXX
82131		X	Amino acids, single quant	0.00	0.00	0.00	0.00	0.00	0.00	0.00	0.00	0.00	0.00	XXX
82135		X	Assay, aminolevulinic acid	0.00	0.00	0.00	0.00	0.00	0.00	0.00	0.00	0.00	0.00	XXX
82136		X	Amino acids, quant, 2-5	0.00	0.00	0.00	0.00	0.00	0.00	0.00	0.00	0.00	0.00	XXX
82139		X	Amino acids, quan, 6 or more	0.00	0.00	0.00	0.00	0.00	0.00	0.00	0.00	0.00	0.00	XXX
82140		X	Assay of ammonia	0.00	0.00	0.00	0.00	0.00	0.00	0.00	0.00	0.00	0.00	XXX
82143		X	Amniotic fluid scan	0.00	0.00	0.00	0.00	0.00	0.00	0.00	0.00	0.00	0.00	XXX
82145		X	Assay of amphetamines	0.00	0.00	0.00	0.00	0.00	0.00	0.00	0.00	0.00	0.00	XXX
82150		X	Assay of amylase	0.00	0.00	0.00	0.00	0.00	0.00	0.00	0.00	0.00	0.00	XXX

[1] CPT codes and descriptions only are copyright 2000 American Medical Association. All Rights Reserved. Applicable FARS/DFARS Apply.
[2] Copyright 1994 American Dental Association. All rights reserved.
[3] + Indicates RVUs are not used for Medicare payment.
[4] PE RVUs = Practice Expense Relative Value Units.

ADDENDUM B.—RELATIVE VALUE UNITS (RVU'S) AND RELATED INFORMATION—Continued

CPT[1]/ HCPCS[2]	MOD	Status	Description	Physician Work RVUs[3]	Fully Implemented Non-Facility PE RVUs	Year 2001 Transitional Non-Facility PE RVUs	Fully Implemented Facility PE RVUs	Year 2001 Transitional Facility PE RVUs	Mal-Practice RVUs	Fully Implemented Non-Facility Total	Year 2001 Transitional Non-Facility Total	Fully Implemented Facility Total	Year 2001 Transitional Facility Total	Global
82154		X	Androstanediol glucuronide	0.00	0.00	0.00	0.00	0.00	0.00	0.00	0.00	0.00	0.00	XXX
82157		X	Assay of androstenedione	0.00	0.00	0.00	0.00	0.00	0.00	0.00	0.00	0.00	0.00	XXX
82160		X	Assay of androsterone	0.00	0.00	0.00	0.00	0.00	0.00	0.00	0.00	0.00	0.00	XXX
82163		X	Assay of angiotensin II	0.00	0.00	0.00	0.00	0.00	0.00	0.00	0.00	0.00	0.00	XXX
82164		X	Angiotensin I enzyme test	0.00	0.00	0.00	0.00	0.00	0.00	0.00	0.00	0.00	0.00	XXX
82172		X	Assay of apolipoprotein	0.00	0.00	0.00	0.00	0.00	0.00	0.00	0.00	0.00	0.00	XXX
82175		X	Assay of arsenic	0.00	0.00	0.00	0.00	0.00	0.00	0.00	0.00	0.00	0.00	XXX
82180		X	Assay of ascorbic acid	0.00	0.00	0.00	0.00	0.00	0.00	0.00	0.00	0.00	0.00	XXX
82190		X	Atomic absorption	0.00	0.00	0.00	0.00	0.00	0.00	0.00	0.00	0.00	0.00	XXX
82205		X	Assay of barbiturates	0.00	0.00	0.00	0.00	0.00	0.00	0.00	0.00	0.00	0.00	XXX
82232		X	Assay of beta-2 protein	0.00	0.00	0.00	0.00	0.00	0.00	0.00	0.00	0.00	0.00	XXX
82239		X	Bile acids, total	0.00	0.00	0.00	0.00	0.00	0.00	0.00	0.00	0.00	0.00	XXX
82240		X	Bile acids, cholylglycine	0.00	0.00	0.00	0.00	0.00	0.00	0.00	0.00	0.00	0.00	XXX
82247		X	Bilirubin, total	0.00	0.00	0.00	0.00	0.00	0.00	0.00	0.00	0.00	0.00	XXX
82248		X	Bilirubin, direct	0.00	0.00	0.00	0.00	0.00	0.00	0.00	0.00	0.00	0.00	XXX
82251		D	Assay of bilirubin	0.00	0.00	0.00	0.00	0.00	0.00	0.00	0.00	0.00	0.00	XXX
82252		X	Fecal bilirubin test	0.00	0.00	0.00	0.00	0.00	0.00	0.00	0.00	0.00	0.00	XXX
82261		X	Assay of biotinidase	0.00	0.00	0.00	0.00	0.00	0.00	0.00	0.00	0.00	0.00	XXX
82270		X	Test for blood, feces	0.00	0.00	0.00	0.00	0.00	0.00	0.00	0.00	0.00	0.00	XXX
82273		X	Test for blood, other source	0.00	0.00	0.00	0.00	0.00	0.00	0.00	0.00	0.00	0.00	XXX
82286		X	Assay of bradykinin	0.00	0.00	0.00	0.00	0.00	0.00	0.00	0.00	0.00	0.00	XXX
82300		X	Assay of cadmium	0.00	0.00	0.00	0.00	0.00	0.00	0.00	0.00	0.00	0.00	XXX
82306		X	Assay of vitamin D	0.00	0.00	0.00	0.00	0.00	0.00	0.00	0.00	0.00	0.00	XXX
82307		X	Assay of vitamin D	0.00	0.00	0.00	0.00	0.00	0.00	0.00	0.00	0.00	0.00	XXX
82308		X	Assay of calcitonin	0.00	0.00	0.00	0.00	0.00	0.00	0.00	0.00	0.00	0.00	XXX
82310		X	Assay of calcium	0.00	0.00	0.00	0.00	0.00	0.00	0.00	0.00	0.00	0.00	XXX
82330		X	Assay of calcium	0.00	0.00	0.00	0.00	0.00	0.00	0.00	0.00	0.00	0.00	XXX
82331		X	Calcium infusion test	0.00	0.00	0.00	0.00	0.00	0.00	0.00	0.00	0.00	0.00	XXX
82340		X	Assay of calcium in urine	0.00	0.00	0.00	0.00	0.00	0.00	0.00	0.00	0.00	0.00	XXX
82355		X	Calculus (stone) analysis	0.00	0.00	0.00	0.00	0.00	0.00	0.00	0.00	0.00	0.00	XXX
82360		X	Calculus (stone) assay	0.00	0.00	0.00	0.00	0.00	0.00	0.00	0.00	0.00	0.00	XXX
82365		X	Calculus (stone) assay	0.00	0.00	0.00	0.00	0.00	0.00	0.00	0.00	0.00	0.00	XXX
82370		X	X-ray assay, calculus	0.00	0.00	0.00	0.00	0.00	0.00	0.00	0.00	0.00	0.00	XXX
82373		X	Assay, c-d transfer measure	0.00	0.00	0.00	0.00	0.00	0.00	0.00	0.00	0.00	0.00	XXX
82374		X	Assay, blood carbon dioxide	0.00	0.00	0.00	0.00	0.00	0.00	0.00	0.00	0.00	0.00	XXX
82375		X	Assay, blood carbon monoxide	0.00	0.00	0.00	0.00	0.00	0.00	0.00	0.00	0.00	0.00	XXX
82376		X	Test for carbon monoxide	0.00	0.00	0.00	0.00	0.00	0.00	0.00	0.00	0.00	0.00	XXX
82378		X	Carcinoembryonic antigen	0.00	0.00	0.00	0.00	0.00	0.00	0.00	0.00	0.00	0.00	XXX
82379		X	Assay of carnitine	0.00	0.00	0.00	0.00	0.00	0.00	0.00	0.00	0.00	0.00	XXX
82380		X	Assay of carotene	0.00	0.00	0.00	0.00	0.00	0.00	0.00	0.00	0.00	0.00	XXX
82382		X	Assay, urine catecholamines	0.00	0.00	0.00	0.00	0.00	0.00	0.00	0.00	0.00	0.00	XXX
82383		X	Assay, blood catecholamines	0.00	0.00	0.00	0.00	0.00	0.00	0.00	0.00	0.00	0.00	XXX
82384		X	Assay, three catecholamines	0.00	0.00	0.00	0.00	0.00	0.00	0.00	0.00	0.00	0.00	XXX
82387		X	Assay of cathepsin-d	0.00	0.00	0.00	0.00	0.00	0.00	0.00	0.00	0.00	0.00	XXX
82390		X	Assay of ceruloplasmin	0.00	0.00	0.00	0.00	0.00	0.00	0.00	0.00	0.00	0.00	XXX
82397		X	Chemiluminescent assay	0.00	0.00	0.00	0.00	0.00	0.00	0.00	0.00	0.00	0.00	XXX
82415		X	Assay of chloramphenicol	0.00	0.00	0.00	0.00	0.00	0.00	0.00	0.00	0.00	0.00	XXX
82435		X	Assay of blood chloride	0.00	0.00	0.00	0.00	0.00	0.00	0.00	0.00	0.00	0.00	XXX
82436		X	Assay of urine chloride	0.00	0.00	0.00	0.00	0.00	0.00	0.00	0.00	0.00	0.00	XXX
82438		X	Assay, other fluid chlorides	0.00	0.00	0.00	0.00	0.00	0.00	0.00	0.00	0.00	0.00	XXX
82441		X	Test for chlorohydrocarbons	0.00	0.00	0.00	0.00	0.00	0.00	0.00	0.00	0.00	0.00	XXX
82465		X	Assay, bld/serum cholesterol	0.00	0.00	0.00	0.00	0.00	0.00	0.00	0.00	0.00	0.00	XXX
82480		X	Assay, serum cholinesterase	0.00	0.00	0.00	0.00	0.00	0.00	0.00	0.00	0.00	0.00	XXX
82482		X	Assay, rbc cholinesterase	0.00	0.00	0.00	0.00	0.00	0.00	0.00	0.00	0.00	0.00	XXX
82485		X	Assay, chondroitin sulfate	0.00	0.00	0.00	0.00	0.00	0.00	0.00	0.00	0.00	0.00	XXX
82486		X	Gas/liquid chromatography	0.00	0.00	0.00	0.00	0.00	0.00	0.00	0.00	0.00	0.00	XXX
82487		X	Paper chromatography	0.00	0.00	0.00	0.00	0.00	0.00	0.00	0.00	0.00	0.00	XXX
82488		X	Paper chromatography	0.00	0.00	0.00	0.00	0.00	0.00	0.00	0.00	0.00	0.00	XXX
82489		X	Thin layer chromatography	0.00	0.00	0.00	0.00	0.00	0.00	0.00	0.00	0.00	0.00	XXX
82491		X	Chromotography, quant, sing	0.00	0.00	0.00	0.00	0.00	0.00	0.00	0.00	0.00	0.00	XXX
82492		X	Chromotography, quant, mult	0.00	0.00	0.00	0.00	0.00	0.00	0.00	0.00	0.00	0.00	XXX
82495		X	Assay of chromium	0.00	0.00	0.00	0.00	0.00	0.00	0.00	0.00	0.00	0.00	XXX
82507		X	Assay of citrate	0.00	0.00	0.00	0.00	0.00	0.00	0.00	0.00	0.00	0.00	XXX
82520		X	Assay of cocaine	0.00	0.00	0.00	0.00	0.00	0.00	0.00	0.00	0.00	0.00	XXX
82523		X	Collagen crosslinks	0.00	0.00	0.00	0.00	0.00	0.00	0.00	0.00	0.00	0.00	XXX
82525		X	Assay of copper	0.00	0.00	0.00	0.00	0.00	0.00	0.00	0.00	0.00	0.00	XXX
82528		X	Assay of corticosterone	0.00	0.00	0.00	0.00	0.00	0.00	0.00	0.00	0.00	0.00	XXX
82530		X	Cortisol, free	0.00	0.00	0.00	0.00	0.00	0.00	0.00	0.00	0.00	0.00	XXX
82533		X	Total cortisol	0.00	0.00	0.00	0.00	0.00	0.00	0.00	0.00	0.00	0.00	XXX
82540		X	Assay of creatine	0.00	0.00	0.00	0.00	0.00	0.00	0.00	0.00	0.00	0.00	XXX
82541		X	Column chromotography, qual	0.00	0.00	0.00	0.00	0.00	0.00	0.00	0.00	0.00	0.00	XXX
82542		X	Column chromotography, quant	0.00	0.00	0.00	0.00	0.00	0.00	0.00	0.00	0.00	0.00	XXX
82543		X	Column chromotograph/isotope	0.00	0.00	0.00	0.00	0.00	0.00	0.00	0.00	0.00	0.00	XXX
82544		X	Column chromotograph/isotope	0.00	0.00	0.00	0.00	0.00	0.00	0.00	0.00	0.00	0.00	XXX
82550		X	Assay of ck (cpk)	0.00	0.00	0.00	0.00	0.00	0.00	0.00	0.00	0.00	0.00	XXX
82552		X	Assay of cpk in blood	0.00	0.00	0.00	0.00	0.00	0.00	0.00	0.00	0.00	0.00	XXX
82553		X	Creatine, MB fraction	0.00	0.00	0.00	0.00	0.00	0.00	0.00	0.00	0.00	0.00	XXX
82554		X	Creatine, isoforms	0.00	0.00	0.00	0.00	0.00	0.00	0.00	0.00	0.00	0.00	XXX
82565		X	Assay of creatinine	0.00	0.00	0.00	0.00	0.00	0.00	0.00	0.00	0.00	0.00	XXX
82570		X	Assay of urine creatinine	0.00	0.00	0.00	0.00	0.00	0.00	0.00	0.00	0.00	0.00	XXX
82575		X	Creatinine clearance test	0.00	0.00	0.00	0.00	0.00	0.00	0.00	0.00	0.00	0.00	XXX
82585		X	Assay of cryofibrinogen	0.00	0.00	0.00	0.00	0.00	0.00	0.00	0.00	0.00	0.00	XXX
82595		X	Assay of cryoglobulin	0.00	0.00	0.00	0.00	0.00	0.00	0.00	0.00	0.00	0.00	XXX

[1] CPT codes and descriptions only are copyright 2000 American Medical Association. All Rights Reserved. Applicable FARS/DFARS Apply.
[2] Copyright 1994 American Dental Association. All rights reserved.
[3] + Indicates RVUs are not used for Medicare payment.
[4] PE RVUs = Practice Expense Relative Value Units.

ADDENDUM B.—RELATIVE VALUE UNITS (RVU'S) AND RELATED INFORMATION—Continued

CPT[1]/ HCPCS[2]	MOD	Status	Description	Physician Work RVUs[3]	Fully Implemented Non-Facility PE RVUs	Year 2001 Transitional Non-Facility PE RVUs	Fully Implemented Facility PE RVUs	Year 2001 Transitional Facility PE RVUs	Mal-Practice RVUs	Fully Implemented Non-Facility Total	Year 2001 Transitional Non-Facility Total	Fully Implemented Facility Total	Year 2001 Transitional Facility Total	Global
82600		X	Assay of cyanide	0.00	0.00	0.00	0.00	0.00	0.00	0.00	0.00	0.00	0.00	XXX
82607		X	Vitamin B-12	0.00	0.00	0.00	0.00	0.00	0.00	0.00	0.00	0.00	0.00	XXX
82608		X	B-12 binding capacity	0.00	0.00	0.00	0.00	0.00	0.00	0.00	0.00	0.00	0.00	XXX
82615		X	Test for urine cystines	0.00	0.00	0.00	0.00	0.00	0.00	0.00	0.00	0.00	0.00	XXX
82626		X	Dehydroepiandrosterone	0.00	0.00	0.00	0.00	0.00	0.00	0.00	0.00	0.00	0.00	XXX
82627		X	Dehydroepiandrosterone	0.00	0.00	0.00	0.00	0.00	0.00	0.00	0.00	0.00	0.00	XXX
82633		X	Desoxycorticosterone	0.00	0.00	0.00	0.00	0.00	0.00	0.00	0.00	0.00	0.00	XXX
82634		X	Deoxycortisol	0.00	0.00	0.00	0.00	0.00	0.00	0.00	0.00	0.00	0.00	XXX
82638		X	Assay of dibucaine number	0.00	0.00	0.00	0.00	0.00	0.00	0.00	0.00	0.00	0.00	XXX
82646		X	Assay of dihydrocodeinone	0.00	0.00	0.00	0.00	0.00	0.00	0.00	0.00	0.00	0.00	XXX
82649		X	Assay of dihydromorphinone	0.00	0.00	0.00	0.00	0.00	0.00	0.00	0.00	0.00	0.00	XXX
82651		X	Assay of dihydrotestosterone	0.00	0.00	0.00	0.00	0.00	0.00	0.00	0.00	0.00	0.00	XXX
82652		X	Assay of dihydroxyvitamin d	0.00	0.00	0.00	0.00	0.00	0.00	0.00	0.00	0.00	0.00	XXX
82654		X	Assay of dimethadione	0.00	0.00	0.00	0.00	0.00	0.00	0.00	0.00	0.00	0.00	XXX
82657		X	Enzyme cell activity	0.00	0.00	0.00	0.00	0.00	0.00	0.00	0.00	0.00	0.00	XXX
82658		X	Enzyme cell activity, ra	0.00	0.00	0.00	0.00	0.00	0.00	0.00	0.00	0.00	0.00	XXX
82664		X	Electrophoretic test	0.00	0.00	0.00	0.00	0.00	0.00	0.00	0.00	0.00	0.00	XXX
82666		X	Assay of epiandrosterone	0.00	0.00	0.00	0.00	0.00	0.00	0.00	0.00	0.00	0.00	XXX
82668		X	Assay of erythropoietin	0.00	0.00	0.00	0.00	0.00	0.00	0.00	0.00	0.00	0.00	XXX
82670		X	Assay of estradiol	0.00	0.00	0.00	0.00	0.00	0.00	0.00	0.00	0.00	0.00	XXX
82671		X	Assay of estrogens	0.00	0.00	0.00	0.00	0.00	0.00	0.00	0.00	0.00	0.00	XXX
82672		X	Assay of estrogen	0.00	0.00	0.00	0.00	0.00	0.00	0.00	0.00	0.00	0.00	XXX
82677		X	Assay of estriol	0.00	0.00	0.00	0.00	0.00	0.00	0.00	0.00	0.00	0.00	XXX
82679		X	Assay of estrone	0.00	0.00	0.00	0.00	0.00	0.00	0.00	0.00	0.00	0.00	XXX
82690		X	Assay of ethchlorvynol	0.00	0.00	0.00	0.00	0.00	0.00	0.00	0.00	0.00	0.00	XXX
82693		X	Assay of ethylene glycol	0.00	0.00	0.00	0.00	0.00	0.00	0.00	0.00	0.00	0.00	XXX
82696		X	Assay of etiocholanolone	0.00	0.00	0.00	0.00	0.00	0.00	0.00	0.00	0.00	0.00	XXX
82705		X	Fats/lipids, feces, qual	0.00	0.00	0.00	0.00	0.00	0.00	0.00	0.00	0.00	0.00	XXX
82710		X	Fats/lipids, feces, quant	0.00	0.00	0.00	0.00	0.00	0.00	0.00	0.00	0.00	0.00	XXX
82715		X	Assay of fecal fat	0.00	0.00	0.00	0.00	0.00	0.00	0.00	0.00	0.00	0.00	XXX
82725		X	Assay of blood fatty acids	0.00	0.00	0.00	0.00	0.00	0.00	0.00	0.00	0.00	0.00	XXX
82726		X	Long chain fatty acids	0.00	0.00	0.00	0.00	0.00	0.00	0.00	0.00	0.00	0.00	XXX
82728		X	Assay of ferritin	0.00	0.00	0.00	0.00	0.00	0.00	0.00	0.00	0.00	0.00	XXX
82731		X	Assay of fetal fibronectin	0.00	0.00	0.00	0.00	0.00	0.00	0.00	0.00	0.00	0.00	XXX
82735		X	Assay of fluoride	0.00	0.00	0.00	0.00	0.00	0.00	0.00	0.00	0.00	0.00	XXX
82742		X	Assay of flurazepam	0.00	0.00	0.00	0.00	0.00	0.00	0.00	0.00	0.00	0.00	XXX
82746		X	Blood folic acid serum	0.00	0.00	0.00	0.00	0.00	0.00	0.00	0.00	0.00	0.00	XXX
82747		X	Assay of folic acid, rbc	0.00	0.00	0.00	0.00	0.00	0.00	0.00	0.00	0.00	0.00	XXX
82757		X	Assay of semen fructose	0.00	0.00	0.00	0.00	0.00	0.00	0.00	0.00	0.00	0.00	XXX
82759		X	Assay of rbc galactokinase	0.00	0.00	0.00	0.00	0.00	0.00	0.00	0.00	0.00	0.00	XXX
82760		X	Assay of galactose	0.00	0.00	0.00	0.00	0.00	0.00	0.00	0.00	0.00	0.00	XXX
82775		X	Assay galactose transferase	0.00	0.00	0.00	0.00	0.00	0.00	0.00	0.00	0.00	0.00	XXX
82776		X	Galactose transferase test	0.00	0.00	0.00	0.00	0.00	0.00	0.00	0.00	0.00	0.00	XXX
82784		X	Assay of gammaglobulin igm	0.00	0.00	0.00	0.00	0.00	0.00	0.00	0.00	0.00	0.00	XXX
82785		X	Assay of gammaglobulin ige	0.00	0.00	0.00	0.00	0.00	0.00	0.00	0.00	0.00	0.00	XXX
82787		X	Igg 1, 2, 3 or 4, each	0.00	0.00	0.00	0.00	0.00	0.00	0.00	0.00	0.00	0.00	XXX
82800		X	Blood pH	0.00	0.00	0.00	0.00	0.00	0.00	0.00	0.00	0.00	0.00	XXX
82803		X	Blood gases: pH, pO2 & pCO2	0.00	0.00	0.00	0.00	0.00	0.00	0.00	0.00	0.00	0.00	XXX
82805		X	Blood gases W/02 saturation	0.00	0.00	0.00	0.00	0.00	0.00	0.00	0.00	0.00	0.00	XXX
82810		X	Blood gases, O2 sat only	0.00	0.00	0.00	0.00	0.00	0.00	0.00	0.00	0.00	0.00	XXX
82820		X	Hemoglobin-oxygen affinity	0.00	0.00	0.00	0.00	0.00	0.00	0.00	0.00	0.00	0.00	XXX
82926		X	Assay of gastric acid	0.00	0.00	0.00	0.00	0.00	0.00	0.00	0.00	0.00	0.00	XXX
82928		X	Assay of gastric acid	0.00	0.00	0.00	0.00	0.00	0.00	0.00	0.00	0.00	0.00	XXX
82938		X	Gastrin test	0.00	0.00	0.00	0.00	0.00	0.00	0.00	0.00	0.00	0.00	XXX
82941		X	Assay of gastrin	0.00	0.00	0.00	0.00	0.00	0.00	0.00	0.00	0.00	0.00	XXX
82943		X	Assay of glucagon	0.00	0.00	0.00	0.00	0.00	0.00	0.00	0.00	0.00	0.00	XXX
82945		X	Glucose other fluid	0.00	0.00	0.00	0.00	0.00	0.00	0.00	0.00	0.00	0.00	XXX
82946		X	Glucagon tolerance test	0.00	0.00	0.00	0.00	0.00	0.00	0.00	0.00	0.00	0.00	XXX
82947		X	Assay, glucose, blood quant	0.00	0.00	0.00	0.00	0.00	0.00	0.00	0.00	0.00	0.00	XXX
82948		X	Reagent strip/blood glucose	0.00	0.00	0.00	0.00	0.00	0.00	0.00	0.00	0.00	0.00	XXX
82950		X	Glucose test	0.00	0.00	0.00	0.00	0.00	0.00	0.00	0.00	0.00	0.00	XXX
82951		X	Glucose tolerance test (GTT)	0.00	0.00	0.00	0.00	0.00	0.00	0.00	0.00	0.00	0.00	XXX
82952		X	GTT-added samples	0.00	0.00	0.00	0.00	0.00	0.00	0.00	0.00	0.00	0.00	XXX
82953		X	Glucose-tolbutamide test	0.00	0.00	0.00	0.00	0.00	0.00	0.00	0.00	0.00	0.00	XXX
82955		X	Assay of g6pd enzyme	0.00	0.00	0.00	0.00	0.00	0.00	0.00	0.00	0.00	0.00	XXX
82960		X	Test for G6PD enzyme	0.00	0.00	0.00	0.00	0.00	0.00	0.00	0.00	0.00	0.00	XXX
82962		X	Glucose blood test	0.00	0.00	0.00	0.00	0.00	0.00	0.00	0.00	0.00	0.00	XXX
82963		X	Assay of glucosidase	0.00	0.00	0.00	0.00	0.00	0.00	0.00	0.00	0.00	0.00	XXX
82965		X	Assay of gdh enzyme	0.00	0.00	0.00	0.00	0.00	0.00	0.00	0.00	0.00	0.00	XXX
82975		X	Assay of glutamine	0.00	0.00	0.00	0.00	0.00	0.00	0.00	0.00	0.00	0.00	XXX
82977		X	Assay of GGT	0.00	0.00	0.00	0.00	0.00	0.00	0.00	0.00	0.00	0.00	XXX
82978		X	Assay of glutathione	0.00	0.00	0.00	0.00	0.00	0.00	0.00	0.00	0.00	0.00	XXX
82979		X	Assay, rbc glutathione	0.00	0.00	0.00	0.00	0.00	0.00	0.00	0.00	0.00	0.00	XXX
82980		X	Assay of glutethimide	0.00	0.00	0.00	0.00	0.00	0.00	0.00	0.00	0.00	0.00	XXX
82985		X	Glycated protein	0.00	0.00	0.00	0.00	0.00	0.00	0.00	0.00	0.00	0.00	XXX
83001		X	Gonadotropin (FSH)	0.00	0.00	0.00	0.00	0.00	0.00	0.00	0.00	0.00	0.00	XXX
83002		X	Gonadotropin (LH)	0.00	0.00	0.00	0.00	0.00	0.00	0.00	0.00	0.00	0.00	XXX
83003		X	Assay, growth hormone (hgh)	0.00	0.00	0.00	0.00	0.00	0.00	0.00	0.00	0.00	0.00	XXX
83008		X	Assay of guanosine	0.00	0.00	0.00	0.00	0.00	0.00	0.00	0.00	0.00	0.00	XXX
83010		X	Assay of haptoglobin, quant	0.00	0.00	0.00	0.00	0.00	0.00	0.00	0.00	0.00	0.00	XXX
83012		X	Assay of haptoglobins	0.00	0.00	0.00	0.00	0.00	0.00	0.00	0.00	0.00	0.00	XXX
83013		X	H pylori analysis	0.00	0.00	0.00	0.00	0.00	0.00	0.00	0.00	0.00	0.00	XXX
83014		X	H pylori drug admin/collect	0.00	0.00	0.00	0.00	0.00	0.00	0.00	0.00	0.00	0.00	XXX

[1] CPT codes and descriptions only are copyright 2000 American Medical Association. All Rights Reserved. Applicable FARS/DFARS Apply.
[2] Copyright 1994 American Dental Association. All rights reserved.
[3] + Indicates RVUs are not used for Medicare payment.
[4] PE RVUs = Practice Expense Relative Value Units.

ADDENDUM B.—RELATIVE VALUE UNITS (RVU'S) AND RELATED INFORMATION—Continued

CPT[1]/ HCPCS[2]	MOD	Status	Description	Physician Work RVUs[3]	Fully Implemented Non-Facility PE RVUs	Year 2001 Transitional Non-Facility PE RVUs	Fully Implemented Facility PE RVUs	Year 2001 Transitional Facility PE RVUs	Mal-Practice RVUs	Fully Implemented Non-Facility Total	Year 2001 Transitional Non-Facility Total	Fully Implemented Facility Total	Year 2001 Transitional Facility Total	Global
83015		X	Heavy metal screen	0.00	0.00	0.00	0.00	0.00	0.00	0.00	0.00	0.00	0.00	XXX
83018		X	Quantitative screen, metals	0.00	0.00	0.00	0.00	0.00	0.00	0.00	0.00	0.00	0.00	XXX
83020		X	Hemoglobin electrophoresis	0.00	0.00	0.00	0.00	0.00	0.00	0.00	0.00	0.00	0.00	XXX
83020	26	A	Hemoglobin electrophoresis	0.37	0.16	0.18	0.16	0.18	0.01	0.54	0.56	0.54	0.56	XXX
83021		X	Hemoglobin chromotography	0.00	0.00	0.00	0.00	0.00	0.00	0.00	0.00	0.00	0.00	XXX
83026		X	Hemoglobin, copper sulfate	0.00	0.00	0.00	0.00	0.00	0.00	0.00	0.00	0.00	0.00	XXX
83030		X	Fetal hemoglobin, chemical	0.00	0.00	0.00	0.00	0.00	0.00	0.00	0.00	0.00	0.00	XXX
83033		X	Fetal hemoglobin assay, qual	0.00	0.00	0.00	0.00	0.00	0.00	0.00	0.00	0.00	0.00	XXX
83036		X	Glycated hemoglobin test	0.00	0.00	0.00	0.00	0.00	0.00	0.00	0.00	0.00	0.00	XXX
83045		X	Blood methemoglobin test	0.00	0.00	0.00	0.00	0.00	0.00	0.00	0.00	0.00	0.00	XXX
83050		X	Blood methemoglobin assay	0.00	0.00	0.00	0.00	0.00	0.00	0.00	0.00	0.00	0.00	XXX
83051		X	Assay of plasma hemoglobin	0.00	0.00	0.00	0.00	0.00	0.00	0.00	0.00	0.00	0.00	XXX
83055		X	Blood sulfhemoglobin test	0.00	0.00	0.00	0.00	0.00	0.00	0.00	0.00	0.00	0.00	XXX
83060		X	Blood sulfhemoglobin assay	0.00	0.00	0.00	0.00	0.00	0.00	0.00	0.00	0.00	0.00	XXX
83065		X	Assay of hemoglobin heat	0.00	0.00	0.00	0.00	0.00	0.00	0.00	0.00	0.00	0.00	XXX
83068		X	Hemoglobin stability screen	0.00	0.00	0.00	0.00	0.00	0.00	0.00	0.00	0.00	0.00	XXX
83069		X	Assay of urine hemoglobin	0.00	0.00	0.00	0.00	0.00	0.00	0.00	0.00	0.00	0.00	XXX
83070		X	Assay of hemosiderin, qual	0.00	0.00	0.00	0.00	0.00	0.00	0.00	0.00	0.00	0.00	XXX
83071		X	Assay of hemosiderin, quant	0.00	0.00	0.00	0.00	0.00	0.00	0.00	0.00	0.00	0.00	XXX
83080		X	Assay of b hexosaminidase	0.00	0.00	0.00	0.00	0.00	0.00	0.00	0.00	0.00	0.00	XXX
83088		X	Assay of histamine	0.00	0.00	0.00	0.00	0.00	0.00	0.00	0.00	0.00	0.00	XXX
83090		X	Assay of homocystine	0.00	0.00	0.00	0.00	0.00	0.00	0.00	0.00	0.00	0.00	XXX
83150		X	Assay of for hva	0.00	0.00	0.00	0.00	0.00	0.00	0.00	0.00	0.00	0.00	XXX
83491		X	Assay of corticosteroids	0.00	0.00	0.00	0.00	0.00	0.00	0.00	0.00	0.00	0.00	XXX
83497		X	Assay of 5-hiaa	0.00	0.00	0.00	0.00	0.00	0.00	0.00	0.00	0.00	0.00	XXX
83498		X	Assay of progesterone	0.00	0.00	0.00	0.00	0.00	0.00	0.00	0.00	0.00	0.00	XXX
83499		X	Assay of progesterone	0.00	0.00	0.00	0.00	0.00	0.00	0.00	0.00	0.00	0.00	XXX
83500		X	Assay, free hydroxyproline	0.00	0.00	0.00	0.00	0.00	0.00	0.00	0.00	0.00	0.00	XXX
83505		X	Assay, total hydroxyproline	0.00	0.00	0.00	0.00	0.00	0.00	0.00	0.00	0.00	0.00	XXX
83516		X	Immunoassay, nonantibody	0.00	0.00	0.00	0.00	0.00	0.00	0.00	0.00	0.00	0.00	XXX
83518		X	Immunoassay, dipstick	0.00	0.00	0.00	0.00	0.00	0.00	0.00	0.00	0.00	0.00	XXX
83519		X	Immunoassay, nonantibody	0.00	0.00	0.00	0.00	0.00	0.00	0.00	0.00	0.00	0.00	XXX
83520		X	Immunoassay, RIA	0.00	0.00	0.00	0.00	0.00	0.00	0.00	0.00	0.00	0.00	XXX
83525		X	Assay of insulin	0.00	0.00	0.00	0.00	0.00	0.00	0.00	0.00	0.00	0.00	XXX
83527		X	Assay of insulin	0.00	0.00	0.00	0.00	0.00	0.00	0.00	0.00	0.00	0.00	XXX
83528		X	Assay of intrinsic factor	0.00	0.00	0.00	0.00	0.00	0.00	0.00	0.00	0.00	0.00	XXX
83540		X	Assay of iron	0.00	0.00	0.00	0.00	0.00	0.00	0.00	0.00	0.00	0.00	XXX
83550		X	Iron binding test	0.00	0.00	0.00	0.00	0.00	0.00	0.00	0.00	0.00	0.00	XXX
83570		X	Assay of idh enzyme	0.00	0.00	0.00	0.00	0.00	0.00	0.00	0.00	0.00	0.00	XXX
83582		X	Assay of ketogenic steroids	0.00	0.00	0.00	0.00	0.00	0.00	0.00	0.00	0.00	0.00	XXX
83586		X	Assay 17- ketosteroids	0.00	0.00	0.00	0.00	0.00	0.00	0.00	0.00	0.00	0.00	XXX
83593		X	Fractionation, ketosteroids	0.00	0.00	0.00	0.00	0.00	0.00	0.00	0.00	0.00	0.00	XXX
83605		X	Assay of lactic acid	0.00	0.00	0.00	0.00	0.00	0.00	0.00	0.00	0.00	0.00	XXX
83615		X	Lactate (LD) (LDH) enzyme	0.00	0.00	0.00	0.00	0.00	0.00	0.00	0.00	0.00	0.00	XXX
83625		X	Assay of ldh enzymes	0.00	0.00	0.00	0.00	0.00	0.00	0.00	0.00	0.00	0.00	XXX
83632		X	Placental lactogen	0.00	0.00	0.00	0.00	0.00	0.00	0.00	0.00	0.00	0.00	XXX
83633		X	Test urine for lactose	0.00	0.00	0.00	0.00	0.00	0.00	0.00	0.00	0.00	0.00	XXX
83634		X	Assay of urine for lactose	0.00	0.00	0.00	0.00	0.00	0.00	0.00	0.00	0.00	0.00	XXX
83655		X	Assay of lead	0.00	0.00	0.00	0.00	0.00	0.00	0.00	0.00	0.00	0.00	XXX
83661		X	L/s ratio, fetal lung	0.00	0.00	0.00	0.00	0.00	0.00	0.00	0.00	0.00	0.00	XXX
83662		X	Foam stability, fetal lung	0.00	0.00	0.00	0.00	0.00	0.00	0.00	0.00	0.00	0.00	XXX
83663		X	Fluoro polarize, fetal lung	0.00	0.00	0.00	0.00	0.00	0.00	0.00	0.00	0.00	0.00	XXX
83664		X	Lamellar bdy, fetal lung	0.00	0.00	0.00	0.00	0.00	0.00	0.00	0.00	0.00	0.00	XXX
83670		X	Assay of lap enzyme	0.00	0.00	0.00	0.00	0.00	0.00	0.00	0.00	0.00	0.00	XXX
83690		X	Assay of lipase	0.00	0.00	0.00	0.00	0.00	0.00	0.00	0.00	0.00	0.00	XXX
83715		X	Assay of blood lipoproteins	0.00	0.00	0.00	0.00	0.00	0.00	0.00	0.00	0.00	0.00	XXX
83716		X	Assay of blood lipoproteins	0.00	0.00	0.00	0.00	0.00	0.00	0.00	0.00	0.00	0.00	XXX
83718		X	Assay of lipoprotein	0.00	0.00	0.00	0.00	0.00	0.00	0.00	0.00	0.00	0.00	XXX
83719		X	Assay of blood lipoprotein	0.00	0.00	0.00	0.00	0.00	0.00	0.00	0.00	0.00	0.00	XXX
83721		X	Assay of blood lipoprotein	0.00	0.00	0.00	0.00	0.00	0.00	0.00	0.00	0.00	0.00	XXX
83727		X	Assay of lrh hormone	0.00	0.00	0.00	0.00	0.00	0.00	0.00	0.00	0.00	0.00	XXX
83735		X	Assay of magnesium	0.00	0.00	0.00	0.00	0.00	0.00	0.00	0.00	0.00	0.00	XXX
83775		X	Assay of md enzyme	0.00	0.00	0.00	0.00	0.00	0.00	0.00	0.00	0.00	0.00	XXX
83785		X	Assay of manganese	0.00	0.00	0.00	0.00	0.00	0.00	0.00	0.00	0.00	0.00	XXX
83788		X	Mass spectrometry qual	0.00	0.00	0.00	0.00	0.00	0.00	0.00	0.00	0.00	0.00	XXX
83789		X	Mass spectrometry quant	0.00	0.00	0.00	0.00	0.00	0.00	0.00	0.00	0.00	0.00	XXX
83805		X	Assay of meprobamate	0.00	0.00	0.00	0.00	0.00	0.00	0.00	0.00	0.00	0.00	XXX
83825		X	Assay of mercury	0.00	0.00	0.00	0.00	0.00	0.00	0.00	0.00	0.00	0.00	XXX
83835		X	Assay of metanephrines	0.00	0.00	0.00	0.00	0.00	0.00	0.00	0.00	0.00	0.00	XXX
83840		X	Assay of methadone	0.00	0.00	0.00	0.00	0.00	0.00	0.00	0.00	0.00	0.00	XXX
83857		X	Assay of methemalbumin	0.00	0.00	0.00	0.00	0.00	0.00	0.00	0.00	0.00	0.00	XXX
83858		X	Assay of methsuximide	0.00	0.00	0.00	0.00	0.00	0.00	0.00	0.00	0.00	0.00	XXX
83864		X	Mucopolysaccharides	0.00	0.00	0.00	0.00	0.00	0.00	0.00	0.00	0.00	0.00	XXX
83866		X	Mucopolysaccharides screen	0.00	0.00	0.00	0.00	0.00	0.00	0.00	0.00	0.00	0.00	XXX
83872		X	Assay synovial fluid mucin	0.00	0.00	0.00	0.00	0.00	0.00	0.00	0.00	0.00	0.00	XXX
83873		X	Assay of csf protein	0.00	0.00	0.00	0.00	0.00	0.00	0.00	0.00	0.00	0.00	XXX
83874		X	Assay of myoglobin	0.00	0.00	0.00	0.00	0.00	0.00	0.00	0.00	0.00	0.00	XXX
83883		X	Assay, nephelometry not spec	0.00	0.00	0.00	0.00	0.00	0.00	0.00	0.00	0.00	0.00	XXX
83885		X	Assay of nickel	0.00	0.00	0.00	0.00	0.00	0.00	0.00	0.00	0.00	0.00	XXX
83887		X	Assay of nicotine	0.00	0.00	0.00	0.00	0.00	0.00	0.00	0.00	0.00	0.00	XXX
83890		X	Molecule isolate	0.00	0.00	0.00	0.00	0.00	0.00	0.00	0.00	0.00	0.00	XXX
83891		X	Molecule isolate nucleic	0.00	0.00	0.00	0.00	0.00	0.00	0.00	0.00	0.00	0.00	XXX
83892		X	Molecular diagnostics	0.00	0.00	0.00	0.00	0.00	0.00	0.00	0.00	0.00	0.00	XXX

[1] CPT codes and descriptions only are copyright 2000 American Medical Association. All Rights Reserved. Applicable FARS/DFARS Apply.
[2] Copyright 1994 American Dental Association. All rights reserved.
[3] + Indicates RVUs are not used for Medicare payment.
[4] PE RVUs = Practice Expense Relative Value Units.

ADDENDUM B.—RELATIVE VALUE UNITS (RVU'S) AND RELATED INFORMATION—Continued

CPT[1]/ HCPCS[2]	MOD	Status	Description	Physician Work RVUs[3]	Fully Implemented Non-Facility PE RVUs	Year 2001 Transitional Non-Facility PE RVUs	Fully Implemented Facility PE RVUs	Year 2001 Transitional Facility PE RVUs	Mal-Practice RVUs	Fully Implemented Non-Facility Total	Year 2001 Transitional Non-Facility Total	Fully Implemented Facility Total	Year 2001 Transitional Facility Total	Global
83893		X	Molecule dot/slot/blot	0.00	0.00	0.00	0.00	0.00	0.00	0.00	0.00	0.00	0.00	XXX
83894		X	Molecule gel electrophor	0.00	0.00	0.00	0.00	0.00	0.00	0.00	0.00	0.00	0.00	XXX
83896		X	Molecular diagnostics	0.00	0.00	0.00	0.00	0.00	0.00	0.00	0.00	0.00	0.00	XXX
83897		X	Molecule nucleic transfer	0.00	0.00	0.00	0.00	0.00	0.00	0.00	0.00	0.00	0.00	XXX
83898		X	Molecule nucleic ampli	0.00	0.00	0.00	0.00	0.00	0.00	0.00	0.00	0.00	0.00	XXX
83901		X	Molecule nucleic ampli	0.00	0.00	0.00	0.00	0.00	0.00	0.00	0.00	0.00	0.00	XXX
83902		X	Molecular diagnostics	0.00	0.00	0.00	0.00	0.00	0.00	0.00	0.00	0.00	0.00	XXX
83903		X	Molecule mutation scan	0.00	0.00	0.00	0.00	0.00	0.00	0.00	0.00	0.00	0.00	XXX
83904		X	Molecule mutation identify	0.00	0.00	0.00	0.00	0.00	0.00	0.00	0.00	0.00	0.00	XXX
83905		X	Molecule mutation identify	0.00	0.00	0.00	0.00	0.00	0.00	0.00	0.00	0.00	0.00	XXX
83906		X	Molecule mutation identify	0.00	0.00	0.00	0.00	0.00	0.00	0.00	0.00	0.00	0.00	XXX
83912		X	Genetic examination	0.00	0.00	0.00	0.00	0.00	0.00	0.00	0.00	0.00	0.00	XXX
83912	26	A	Genetic examination	0.37	0.16	0.18	0.16	0.18	0.01	0.54	0.56	0.54	0.56	XXX
83915		X	Assay of nucleotidase	0.00	0.00	0.00	0.00	0.00	0.00	0.00	0.00	0.00	0.00	XXX
83916		X	Oligoclonal bands	0.00	0.00	0.00	0.00	0.00	0.00	0.00	0.00	0.00	0.00	XXX
83918		X	Organic acids, total, quant	0.00	0.00	0.00	0.00	0.00	0.00	0.00	0.00	0.00	0.00	XXX
83919		X	Organic acids, qual, each	0.00	0.00	0.00	0.00	0.00	0.00	0.00	0.00	0.00	0.00	XXX
83921		X	Organic acid, single, quant	0.00	0.00	0.00	0.00	0.00	0.00	0.00	0.00	0.00	0.00	XXX
83925		X	Assay of opiates	0.00	0.00	0.00	0.00	0.00	0.00	0.00	0.00	0.00	0.00	XXX
83930		X	Assay of blood osmolality	0.00	0.00	0.00	0.00	0.00	0.00	0.00	0.00	0.00	0.00	XXX
83935		X	Assay of urine osmolality	0.00	0.00	0.00	0.00	0.00	0.00	0.00	0.00	0.00	0.00	XXX
83937		X	Assay of osteocalcin	0.00	0.00	0.00	0.00	0.00	0.00	0.00	0.00	0.00	0.00	XXX
83945		X	Assay of oxalate	0.00	0.00	0.00	0.00	0.00	0.00	0.00	0.00	0.00	0.00	XXX
83970		X	Assay of parathormone	0.00	0.00	0.00	0.00	0.00	0.00	0.00	0.00	0.00	0.00	XXX
83986		X	Assay of body fluid acidity	0.00	0.00	0.00	0.00	0.00	0.00	0.00	0.00	0.00	0.00	XXX
83992		X	Assay for phencyclidine	0.00	0.00	0.00	0.00	0.00	0.00	0.00	0.00	0.00	0.00	XXX
84022		X	Assay of phenothiazine	0.00	0.00	0.00	0.00	0.00	0.00	0.00	0.00	0.00	0.00	XXX
84030		X	Assay of blood pku	0.00	0.00	0.00	0.00	0.00	0.00	0.00	0.00	0.00	0.00	XXX
84035		X	Assay of phenylketones	0.00	0.00	0.00	0.00	0.00	0.00	0.00	0.00	0.00	0.00	XXX
84060		X	Assay acid phosphatase	0.00	0.00	0.00	0.00	0.00	0.00	0.00	0.00	0.00	0.00	XXX
84061		X	Phosphatase, forensic exam	0.00	0.00	0.00	0.00	0.00	0.00	0.00	0.00	0.00	0.00	XXX
84066		X	Assay prostate phosphatase	0.00	0.00	0.00	0.00	0.00	0.00	0.00	0.00	0.00	0.00	XXX
84075		X	Assay alkaline phosphatase	0.00	0.00	0.00	0.00	0.00	0.00	0.00	0.00	0.00	0.00	XXX
84078		X	Assay alkaline phosphatase	0.00	0.00	0.00	0.00	0.00	0.00	0.00	0.00	0.00	0.00	XXX
84080		X	Assay alkaline phosphatases	0.00	0.00	0.00	0.00	0.00	0.00	0.00	0.00	0.00	0.00	XXX
84081		X	Amniotic fluid enzyme test	0.00	0.00	0.00	0.00	0.00	0.00	0.00	0.00	0.00	0.00	XXX
84085		X	Assay of rbc pg6d enzyme	0.00	0.00	0.00	0.00	0.00	0.00	0.00	0.00	0.00	0.00	XXX
84087		X	Assay phosphohexose enzymes	0.00	0.00	0.00	0.00	0.00	0.00	0.00	0.00	0.00	0.00	XXX
84100		X	Assay of phosphorus	0.00	0.00	0.00	0.00	0.00	0.00	0.00	0.00	0.00	0.00	XXX
84105		X	Assay of urine phosphorus	0.00	0.00	0.00	0.00	0.00	0.00	0.00	0.00	0.00	0.00	XXX
84106		X	Test for porphobilinogen	0.00	0.00	0.00	0.00	0.00	0.00	0.00	0.00	0.00	0.00	XXX
84110		X	Assay of porphobilinogen	0.00	0.00	0.00	0.00	0.00	0.00	0.00	0.00	0.00	0.00	XXX
84119		X	Test urine for porphyrins	0.00	0.00	0.00	0.00	0.00	0.00	0.00	0.00	0.00	0.00	XXX
84120		X	Assay of urine porphyrins	0.00	0.00	0.00	0.00	0.00	0.00	0.00	0.00	0.00	0.00	XXX
84126		X	Assay of feces porphyrins	0.00	0.00	0.00	0.00	0.00	0.00	0.00	0.00	0.00	0.00	XXX
84127		X	Assay of feces porphyrins	0.00	0.00	0.00	0.00	0.00	0.00	0.00	0.00	0.00	0.00	XXX
84132		X	Assay of serum potassium	0.00	0.00	0.00	0.00	0.00	0.00	0.00	0.00	0.00	0.00	XXX
84133		X	Assay of urine potassium	0.00	0.00	0.00	0.00	0.00	0.00	0.00	0.00	0.00	0.00	XXX
84134		X	Assay of prealbumin	0.00	0.00	0.00	0.00	0.00	0.00	0.00	0.00	0.00	0.00	XXX
84135		X	Assay of pregnanediol	0.00	0.00	0.00	0.00	0.00	0.00	0.00	0.00	0.00	0.00	XXX
84138		X	Assay of pregnanetriol	0.00	0.00	0.00	0.00	0.00	0.00	0.00	0.00	0.00	0.00	XXX
84140		X	Assay of pregnenolone	0.00	0.00	0.00	0.00	0.00	0.00	0.00	0.00	0.00	0.00	XXX
84143		X	Assay of 17-hydroxypregneno	0.00	0.00	0.00	0.00	0.00	0.00	0.00	0.00	0.00	0.00	XXX
84144		X	Assay of progesterone	0.00	0.00	0.00	0.00	0.00	0.00	0.00	0.00	0.00	0.00	XXX
84146		X	Assay of prolactin	0.00	0.00	0.00	0.00	0.00	0.00	0.00	0.00	0.00	0.00	XXX
84150		X	Assay of prostaglandin	0.00	0.00	0.00	0.00	0.00	0.00	0.00	0.00	0.00	0.00	XXX
84152		X	Assay of psa, complexed	0.00	0.00	0.00	0.00	0.00	0.00	0.00	0.00	0.00	0.00	XXX
84153		X	Assay of psa, total	0.00	0.00	0.00	0.00	0.00	0.00	0.00	0.00	0.00	0.00	XXX
84154		X	Assay of psa, free	0.00	0.00	0.00	0.00	0.00	0.00	0.00	0.00	0.00	0.00	XXX
84155		X	Assay of protein	0.00	0.00	0.00	0.00	0.00	0.00	0.00	0.00	0.00	0.00	XXX
84160		X	Assay of serum protein	0.00	0.00	0.00	0.00	0.00	0.00	0.00	0.00	0.00	0.00	XXX
84165		X	Assay of serum proteins	0.00	0.00	0.00	0.00	0.00	0.00	0.00	0.00	0.00	0.00	XXX
84165	26	A	Assay of serum proteins	0.37	0.16	0.18	0.16	0.18	0.01	0.54	0.56	0.54	0.56	XXX
84181		X	Western blot test	0.00	0.00	0.00	0.00	0.00	0.00	0.00	0.00	0.00	0.00	XXX
84181	26	A	Western blot test	0.37	0.14	0.16	0.14	0.16	0.01	0.52	0.54	0.52	0.54	XXX
84182		X	Protein, western blot test	0.00	0.00	0.00	0.00	0.00	0.00	0.00	0.00	0.00	0.00	XXX
84182	26	A	Protein, western blot test	0.37	0.16	0.18	0.16	0.18	0.01	0.54	0.56	0.54	0.56	XXX
84202		X	Assay RBC protoporphyrin	0.00	0.00	0.00	0.00	0.00	0.00	0.00	0.00	0.00	0.00	XXX
84203		X	Test RBC protoporphyrin	0.00	0.00	0.00	0.00	0.00	0.00	0.00	0.00	0.00	0.00	XXX
84206		X	Assay of proinsulin	0.00	0.00	0.00	0.00	0.00	0.00	0.00	0.00	0.00	0.00	XXX
84207		X	Assay of vitamin b-6	0.00	0.00	0.00	0.00	0.00	0.00	0.00	0.00	0.00	0.00	XXX
84210		X	Assay of pyruvate	0.00	0.00	0.00	0.00	0.00	0.00	0.00	0.00	0.00	0.00	XXX
84220		X	Assay of pyruvate kinase	0.00	0.00	0.00	0.00	0.00	0.00	0.00	0.00	0.00	0.00	XXX
84228		X	Assay of quinine	0.00	0.00	0.00	0.00	0.00	0.00	0.00	0.00	0.00	0.00	XXX
84233		X	Assay of estrogen	0.00	0.00	0.00	0.00	0.00	0.00	0.00	0.00	0.00	0.00	XXX
84234		X	Assay of progesterone	0.00	0.00	0.00	0.00	0.00	0.00	0.00	0.00	0.00	0.00	XXX
84235		X	Assay of endocrine hormone	0.00	0.00	0.00	0.00	0.00	0.00	0.00	0.00	0.00	0.00	XXX
84238		X	Assay, nonendocrine receptor	0.00	0.00	0.00	0.00	0.00	0.00	0.00	0.00	0.00	0.00	XXX
84244		X	Assay of renin	0.00	0.00	0.00	0.00	0.00	0.00	0.00	0.00	0.00	0.00	XXX
84252		X	Assay of vitamin b-2	0.00	0.00	0.00	0.00	0.00	0.00	0.00	0.00	0.00	0.00	XXX
84255		X	Assay of selenium	0.00	0.00	0.00	0.00	0.00	0.00	0.00	0.00	0.00	0.00	XXX
84260		X	Assay of serotonin	0.00	0.00	0.00	0.00	0.00	0.00	0.00	0.00	0.00	0.00	XXX
84270		X	Assay of sex hormone globul	0.00	0.00	0.00	0.00	0.00	0.00	0.00	0.00	0.00	0.00	XXX

[1] CPT codes and descriptions only are copyright 2000 American Medical Association. All Rights Reserved. Applicable FARS/DFARS Apply.
[2] Copyright 1994 American Dental Association. All rights reserved.
[3] + Indicates RVUs are not used for Medicare payment.
[4] PE RVUs = Practice Expense Relative Value Units.

ADDENDUM B.—RELATIVE VALUE UNITS (RVU'S) AND RELATED INFORMATION—Continued

CPT[1]/ HCPCS[2]	MOD	Status	Description	Physician Work RVUs[3]	Fully Implemented Non-Facility PE RVUs	Year 2001 Transitional Non-Facility PE RVUs	Fully Implemented Facility PE RVUs	Year 2001 Transitional Facility PE RVUs	Mal-Practice RVUs	Fully Implemented Non-Facility Total	Year 2001 Transitional Non-Facility Total	Fully Implemented Facility Total	Year 2001 Transitional Facility Total	Global
84275		X	Assay of sialic acid	0.00	0.00	0.00	0.00	0.00	0.00	0.00	0.00	0.00	0.00	XXX
84285		X	Assay of silica	0.00	0.00	0.00	0.00	0.00	0.00	0.00	0.00	0.00	0.00	XXX
84295		X	Assay of serum sodium	0.00	0.00	0.00	0.00	0.00	0.00	0.00	0.00	0.00	0.00	XXX
84300		X	Assay of urine sodium	0.00	0.00	0.00	0.00	0.00	0.00	0.00	0.00	0.00	0.00	XXX
84305		X	Assay of somatomedin	0.00	0.00	0.00	0.00	0.00	0.00	0.00	0.00	0.00	0.00	XXX
84307		X	Assay of somatostatin	0.00	0.00	0.00	0.00	0.00	0.00	0.00	0.00	0.00	0.00	XXX
84311		X	Spectrophotometry	0.00	0.00	0.00	0.00	0.00	0.00	0.00	0.00	0.00	0.00	XXX
84315		X	Body fluid specific gravity	0.00	0.00	0.00	0.00	0.00	0.00	0.00	0.00	0.00	0.00	XXX
84375		X	Chromatogram assay, sugars	0.00	0.00	0.00	0.00	0.00	0.00	0.00	0.00	0.00	0.00	XXX
84376		X	Sugars, single, qual	0.00	0.00	0.00	0.00	0.00	0.00	0.00	0.00	0.00	0.00	XXX
84377		X	Sugars, multiple, qual	0.00	0.00	0.00	0.00	0.00	0.00	0.00	0.00	0.00	0.00	XXX
84378		X	Sugars single quant	0.00	0.00	0.00	0.00	0.00	0.00	0.00	0.00	0.00	0.00	XXX
84379		X	Sugars multiple quant	0.00	0.00	0.00	0.00	0.00	0.00	0.00	0.00	0.00	0.00	XXX
84392		X	Assay of urine sulfate	0.00	0.00	0.00	0.00	0.00	0.00	0.00	0.00	0.00	0.00	XXX
84402		X	Assay of testosterone	0.00	0.00	0.00	0.00	0.00	0.00	0.00	0.00	0.00	0.00	XXX
84403		X	Assay of total testosterone	0.00	0.00	0.00	0.00	0.00	0.00	0.00	0.00	0.00	0.00	XXX
84425		X	Assay of vitamin b-1	0.00	0.00	0.00	0.00	0.00	0.00	0.00	0.00	0.00	0.00	XXX
84430		X	Assay of thiocyanate	0.00	0.00	0.00	0.00	0.00	0.00	0.00	0.00	0.00	0.00	XXX
84432		X	Assay of thyroglobulin	0.00	0.00	0.00	0.00	0.00	0.00	0.00	0.00	0.00	0.00	XXX
84436		X	Assay of total thyroxine	0.00	0.00	0.00	0.00	0.00	0.00	0.00	0.00	0.00	0.00	XXX
84437		X	Assay of neonatal thyroxine	0.00	0.00	0.00	0.00	0.00	0.00	0.00	0.00	0.00	0.00	XXX
84439		X	Assay of free thyroxine	0.00	0.00	0.00	0.00	0.00	0.00	0.00	0.00	0.00	0.00	XXX
84442		X	Assay of thyroid activity	0.00	0.00	0.00	0.00	0.00	0.00	0.00	0.00	0.00	0.00	XXX
84443		X	Assay thyroid stim hormone	0.00	0.00	0.00	0.00	0.00	0.00	0.00	0.00	0.00	0.00	XXX
84445		X	Assay of tsi	0.00	0.00	0.00	0.00	0.00	0.00	0.00	0.00	0.00	0.00	XXX
84446		X	Assay of vitamin e	0.00	0.00	0.00	0.00	0.00	0.00	0.00	0.00	0.00	0.00	XXX
84449		X	Assay of transcortin	0.00	0.00	0.00	0.00	0.00	0.00	0.00	0.00	0.00	0.00	XXX
84450		X	Transferase (AST) (SGOT)	0.00	0.00	0.00	0.00	0.00	0.00	0.00	0.00	0.00	0.00	XXX
84460		X	Alanine amino (ALT) (SGPT)	0.00	0.00	0.00	0.00	0.00	0.00	0.00	0.00	0.00	0.00	XXX
84466		X	Assay of transferrin	0.00	0.00	0.00	0.00	0.00	0.00	0.00	0.00	0.00	0.00	XXX
84478		X	Assay of triglycerides	0.00	0.00	0.00	0.00	0.00	0.00	0.00	0.00	0.00	0.00	XXX
84479		X	Assay of thyroid (t3 or t4)	0.00	0.00	0.00	0.00	0.00	0.00	0.00	0.00	0.00	0.00	XXX
84480		X	Assay, triiodothyronine (t3)	0.00	0.00	0.00	0.00	0.00	0.00	0.00	0.00	0.00	0.00	XXX
84481		X	Free assay (FT-3)	0.00	0.00	0.00	0.00	0.00	0.00	0.00	0.00	0.00	0.00	XXX
84482		X	T3 reverse	0.00	0.00	0.00	0.00	0.00	0.00	0.00	0.00	0.00	0.00	XXX
84484		X	Assay of troponin, quant	0.00	0.00	0.00	0.00	0.00	0.00	0.00	0.00	0.00	0.00	XXX
84485		X	Assay duodenal fluid trypsin	0.00	0.00	0.00	0.00	0.00	0.00	0.00	0.00	0.00	0.00	XXX
84488		X	Test feces for trypsin	0.00	0.00	0.00	0.00	0.00	0.00	0.00	0.00	0.00	0.00	XXX
84490		X	Assay of feces for trypsin	0.00	0.00	0.00	0.00	0.00	0.00	0.00	0.00	0.00	0.00	XXX
84510		X	Assay of tyrosine	0.00	0.00	0.00	0.00	0.00	0.00	0.00	0.00	0.00	0.00	XXX
84512		X	Assay of troponin, qual	0.00	0.00	0.00	0.00	0.00	0.00	0.00	0.00	0.00	0.00	XXX
84520		X	Assay of urea nitrogen	0.00	0.00	0.00	0.00	0.00	0.00	0.00	0.00	0.00	0.00	XXX
84525		X	Urea nitrogen semi-quant	0.00	0.00	0.00	0.00	0.00	0.00	0.00	0.00	0.00	0.00	XXX
84540		X	Assay of urine/urea-n	0.00	0.00	0.00	0.00	0.00	0.00	0.00	0.00	0.00	0.00	XXX
84545		X	Urea-N clearance test	0.00	0.00	0.00	0.00	0.00	0.00	0.00	0.00	0.00	0.00	XXX
84550		X	Assay of blood/uric acid	0.00	0.00	0.00	0.00	0.00	0.00	0.00	0.00	0.00	0.00	XXX
84560		X	Assay of urine/uric acid	0.00	0.00	0.00	0.00	0.00	0.00	0.00	0.00	0.00	0.00	XXX
84577		X	Assay of feces/urobilinogen	0.00	0.00	0.00	0.00	0.00	0.00	0.00	0.00	0.00	0.00	XXX
84578		X	Test urine urobilinogen	0.00	0.00	0.00	0.00	0.00	0.00	0.00	0.00	0.00	0.00	XXX
84580		X	Assay of urine urobilinogen	0.00	0.00	0.00	0.00	0.00	0.00	0.00	0.00	0.00	0.00	XXX
84583		X	Assay of urine urobilinogen	0.00	0.00	0.00	0.00	0.00	0.00	0.00	0.00	0.00	0.00	XXX
84585		X	Assay of urine vma	0.00	0.00	0.00	0.00	0.00	0.00	0.00	0.00	0.00	0.00	XXX
84586		X	Assay of vip	0.00	0.00	0.00	0.00	0.00	0.00	0.00	0.00	0.00	0.00	XXX
84588		X	Assay of vasopressin	0.00	0.00	0.00	0.00	0.00	0.00	0.00	0.00	0.00	0.00	XXX
84590		X	Assay of vitamin a	0.00	0.00	0.00	0.00	0.00	0.00	0.00	0.00	0.00	0.00	XXX
84591		X	Assay of nos vitamin	0.00	0.00	0.00	0.00	0.00	0.00	0.00	0.00	0.00	0.00	XXX
84597		X	Assay of vitamin k	0.00	0.00	0.00	0.00	0.00	0.00	0.00	0.00	0.00	0.00	XXX
84600		X	Assay of volatiles	0.00	0.00	0.00	0.00	0.00	0.00	0.00	0.00	0.00	0.00	XXX
84620		X	Xylose tolerance test	0.00	0.00	0.00	0.00	0.00	0.00	0.00	0.00	0.00	0.00	XXX
84630		X	Assay of zinc	0.00	0.00	0.00	0.00	0.00	0.00	0.00	0.00	0.00	0.00	XXX
84681		X	Assay of c-peptide	0.00	0.00	0.00	0.00	0.00	0.00	0.00	0.00	0.00	0.00	XXX
84702		X	Chorionic gonadotropin test	0.00	0.00	0.00	0.00	0.00	0.00	0.00	0.00	0.00	0.00	XXX
84703		X	Chorionic gonadotropin assay	0.00	0.00	0.00	0.00	0.00	0.00	0.00	0.00	0.00	0.00	XXX
84830		X	Ovulation tests	0.00	0.00	0.00	0.00	0.00	0.00	0.00	0.00	0.00	0.00	XXX
84999		X	Clinical chemistry test	0.00	0.00	0.00	0.00	0.00	0.00	0.00	0.00	0.00	0.00	XXX
85002		X	Bleeding time test	0.00	0.00	0.00	0.00	0.00	0.00	0.00	0.00	0.00	0.00	XXX
85007		X	Differential WBC count	0.00	0.00	0.00	0.00	0.00	0.00	0.00	0.00	0.00	0.00	XXX
85008		X	Nondifferential WBC count	0.00	0.00	0.00	0.00	0.00	0.00	0.00	0.00	0.00	0.00	XXX
85009		X	Differential WBC count	0.00	0.00	0.00	0.00	0.00	0.00	0.00	0.00	0.00	0.00	XXX
85013		X	Hematocrit	0.00	0.00	0.00	0.00	0.00	0.00	0.00	0.00	0.00	0.00	XXX
85014		X	Hematocrit	0.00	0.00	0.00	0.00	0.00	0.00	0.00	0.00	0.00	0.00	XXX
85018		X	Hemoglobin	0.00	0.00	0.00	0.00	0.00	0.00	0.00	0.00	0.00	0.00	XXX
85021		X	Automated hemogram	0.00	0.00	0.00	0.00	0.00	0.00	0.00	0.00	0.00	0.00	XXX
85022		X	Automated hemogram	0.00	0.00	0.00	0.00	0.00	0.00	0.00	0.00	0.00	0.00	XXX
85023		X	Automated hemogram	0.00	0.00	0.00	0.00	0.00	0.00	0.00	0.00	0.00	0.00	XXX
85024		X	Automated hemogram	0.00	0.00	0.00	0.00	0.00	0.00	0.00	0.00	0.00	0.00	XXX
85025		X	Automated hemogram	0.00	0.00	0.00	0.00	0.00	0.00	0.00	0.00	0.00	0.00	XXX
85027		X	Automated hemogram	0.00	0.00	0.00	0.00	0.00	0.00	0.00	0.00	0.00	0.00	XXX
85031		X	Manual hemogram, cbc	0.00	0.00	0.00	0.00	0.00	0.00	0.00	0.00	0.00	0.00	XXX
85041		X	Red blood cell (RBC) count	0.00	0.00	0.00	0.00	0.00	0.00	0.00	0.00	0.00	0.00	XXX
85044		X	Reticulocyte count	0.00	0.00	0.00	0.00	0.00	0.00	0.00	0.00	0.00	0.00	XXX
85045		X	Reticulocyte count	0.00	0.00	0.00	0.00	0.00	0.00	0.00	0.00	0.00	0.00	XXX
85046		X	Reticyte/hgb concentrate	0.00	0.00	0.00	0.00	0.00	0.00	0.00	0.00	0.00	0.00	XXX

[1] CPT codes and descriptions only are copyright 2000 American Medical Association. All Rights Reserved. Applicable FARS/DFARS Apply.
[2] Copyright 1994 American Dental Association. All rights reserved.
[3] + Indicates RVUs are not used for Medicare payment.
[4] PE RVUs = Practice Expense Relative Value Units.

ADDENDUM B.—RELATIVE VALUE UNITS (RVU'S) AND RELATED INFORMATION—Continued

CPT[1]/ HCPCS[2]	MOD	Status	Description	Physician Work RVUs[3]	Fully Implemented Non-Facility PE RVUs	Year 2001 Transitional Non-Facility PE RVUs	Fully Implemented Facility PE RVUs	Year 2001 Transitional Facility PE RVUs	Mal-Practice RVUs	Fully Implemented Non-Facility Total	Year 2001 Transitional Non-Facility Total	Fully Implemented Facility Total	Year 2001 Transitional Facility Total	Global
85048		X	White blood cell (WBC) count	0.00	0.00	0.00	0.00	0.00	0.00	0.00	0.00	0.00	0.00	XXX
85060		A	Blood smear interpretation	0.45	0.19	0.20	0.19	0.20	0.02	0.66	0.67	0.66	0.67	XXX
85095		A	Bone marrow aspiration	1.08	4.47	3.54	0.43	0.51	0.03	5.58	4.65	1.54	1.62	XXX
85097		A	Bone marrow interpretation	0.94	1.80	1.48	0.40	0.43	0.03	2.77	2.45	1.37	1.40	XXX
85102		A	Bone marrow biopsy	1.37	4.59	3.66	0.55	0.63	0.04	6.00	5.07	1.96	2.04	XXX
85130		X	Chromogenic substrate assay	0.00	0.00	0.00	0.00	0.00	0.00	0.00	0.00	0.00	0.00	XXX
85170		X	Blood clot retraction	0.00	0.00	0.00	0.00	0.00	0.00	0.00	0.00	0.00	0.00	XXX
85175		X	Blood clot lysis time	0.00	0.00	0.00	0.00	0.00	0.00	0.00	0.00	0.00	0.00	XXX
85210		X	Blood clot factor II test	0.00	0.00	0.00	0.00	0.00	0.00	0.00	0.00	0.00	0.00	XXX
85220		X	Blood clot factor V test	0.00	0.00	0.00	0.00	0.00	0.00	0.00	0.00	0.00	0.00	XXX
85230		X	Blood clot factor VII test	0.00	0.00	0.00	0.00	0.00	0.00	0.00	0.00	0.00	0.00	XXX
85240		X	Blood clot factor VIII test	0.00	0.00	0.00	0.00	0.00	0.00	0.00	0.00	0.00	0.00	XXX
85244		X	Blood clot factor VIII test	0.00	0.00	0.00	0.00	0.00	0.00	0.00	0.00	0.00	0.00	XXX
85245		X	Blood clot factor VIII test	0.00	0.00	0.00	0.00	0.00	0.00	0.00	0.00	0.00	0.00	XXX
85246		X	Blood clot factor VIII test	0.00	0.00	0.00	0.00	0.00	0.00	0.00	0.00	0.00	0.00	XXX
85247		X	Blood clot factor VIII test	0.00	0.00	0.00	0.00	0.00	0.00	0.00	0.00	0.00	0.00	XXX
85250		X	Blood clot factor IX test	0.00	0.00	0.00	0.00	0.00	0.00	0.00	0.00	0.00	0.00	XXX
85260		X	Blood clot factor X test	0.00	0.00	0.00	0.00	0.00	0.00	0.00	0.00	0.00	0.00	XXX
85270		X	Blood clot factor XI test	0.00	0.00	0.00	0.00	0.00	0.00	0.00	0.00	0.00	0.00	XXX
85280		X	Blood clot factor XII test	0.00	0.00	0.00	0.00	0.00	0.00	0.00	0.00	0.00	0.00	XXX
85290		X	Blood clot factor XIII test	0.00	0.00	0.00	0.00	0.00	0.00	0.00	0.00	0.00	0.00	XXX
85291		X	Blood clot factor XIII test	0.00	0.00	0.00	0.00	0.00	0.00	0.00	0.00	0.00	0.00	XXX
85292		X	Blood clot factor assay	0.00	0.00	0.00	0.00	0.00	0.00	0.00	0.00	0.00	0.00	XXX
85293		X	Blood clot factor assay	0.00	0.00	0.00	0.00	0.00	0.00	0.00	0.00	0.00	0.00	XXX
85300		X	Antithrombin III test	0.00	0.00	0.00	0.00	0.00	0.00	0.00	0.00	0.00	0.00	XXX
85301		X	Antithrombin III test	0.00	0.00	0.00	0.00	0.00	0.00	0.00	0.00	0.00	0.00	XXX
85302		X	Blood clot inhibitor antigen	0.00	0.00	0.00	0.00	0.00	0.00	0.00	0.00	0.00	0.00	XXX
85303		X	Blood clot inhibitor test	0.00	0.00	0.00	0.00	0.00	0.00	0.00	0.00	0.00	0.00	XXX
85305		X	Blood clot inhibitor assay	0.00	0.00	0.00	0.00	0.00	0.00	0.00	0.00	0.00	0.00	XXX
85306		X	Blood clot inhibitor test	0.00	0.00	0.00	0.00	0.00	0.00	0.00	0.00	0.00	0.00	XXX
85307		X	Assay activated protein c	0.00	0.00	0.00	0.00	0.00	0.00	0.00	0.00	0.00	0.00	XXX
85335		X	Factor inhibitor test	0.00	0.00	0.00	0.00	0.00	0.00	0.00	0.00	0.00	0.00	XXX
85337		X	Thrombomodulin	0.00	0.00	0.00	0.00	0.00	0.00	0.00	0.00	0.00	0.00	XXX
85345		X	Coagulation time	0.00	0.00	0.00	0.00	0.00	0.00	0.00	0.00	0.00	0.00	XXX
85347		X	Coagulation time	0.00	0.00	0.00	0.00	0.00	0.00	0.00	0.00	0.00	0.00	XXX
85348		X	Coagulation time	0.00	0.00	0.00	0.00	0.00	0.00	0.00	0.00	0.00	0.00	XXX
85360		X	Euglobulin lysis	0.00	0.00	0.00	0.00	0.00	0.00	0.00	0.00	0.00	0.00	XXX
85362		X	Fibrin degradation products	0.00	0.00	0.00	0.00	0.00	0.00	0.00	0.00	0.00	0.00	XXX
85366		X	Fibrinogen test	0.00	0.00	0.00	0.00	0.00	0.00	0.00	0.00	0.00	0.00	XXX
85370		X	Fibrinogen test	0.00	0.00	0.00	0.00	0.00	0.00	0.00	0.00	0.00	0.00	XXX
85378		X	Fibrin degradation	0.00	0.00	0.00	0.00	0.00	0.00	0.00	0.00	0.00	0.00	XXX
85379		X	Fibrin degradation	0.00	0.00	0.00	0.00	0.00	0.00	0.00	0.00	0.00	0.00	XXX
85384		X	Fibrinogen	0.00	0.00	0.00	0.00	0.00	0.00	0.00	0.00	0.00	0.00	XXX
85385		X	Fibrinogen	0.00	0.00	0.00	0.00	0.00	0.00	0.00	0.00	0.00	0.00	XXX
85390		X	Fibrinolysins screen	0.00	0.00	0.00	0.00	0.00	0.00	0.00	0.00	0.00	0.00	XXX
85390	26	A	Fibrinolysins screen	0.37	0.13	0.15	0.13	0.15	0.01	0.51	0.53	0.51	0.53	XXX
85400		X	Fibrinolytic plasmin	0.00	0.00	0.00	0.00	0.00	0.00	0.00	0.00	0.00	0.00	XXX
85410		X	Fibrinolytic antiplasmin	0.00	0.00	0.00	0.00	0.00	0.00	0.00	0.00	0.00	0.00	XXX
85415		X	Fibrinolytic plasminogen	0.00	0.00	0.00	0.00	0.00	0.00	0.00	0.00	0.00	0.00	XXX
85420		X	Fibrinolytic plasminogen	0.00	0.00	0.00	0.00	0.00	0.00	0.00	0.00	0.00	0.00	XXX
85421		X	Fibrinolytic plasminogen	0.00	0.00	0.00	0.00	0.00	0.00	0.00	0.00	0.00	0.00	XXX
85441		X	Heinz bodies, direct	0.00	0.00	0.00	0.00	0.00	0.00	0.00	0.00	0.00	0.00	XXX
85445		X	Heinz bodies, induced	0.00	0.00	0.00	0.00	0.00	0.00	0.00	0.00	0.00	0.00	XXX
85460		X	Hemoglobin, fetal	0.00	0.00	0.00	0.00	0.00	0.00	0.00	0.00	0.00	0.00	XXX
85461		X	Hemoglobin, fetal	0.00	0.00	0.00	0.00	0.00	0.00	0.00	0.00	0.00	0.00	XXX
85475		X	Hemolysin	0.00	0.00	0.00	0.00	0.00	0.00	0.00	0.00	0.00	0.00	XXX
85520		X	Heparin assay	0.00	0.00	0.00	0.00	0.00	0.00	0.00	0.00	0.00	0.00	XXX
85525		X	Heparin	0.00	0.00	0.00	0.00	0.00	0.00	0.00	0.00	0.00	0.00	XXX
85530		X	Heparin-protamine tolerance	0.00	0.00	0.00	0.00	0.00	0.00	0.00	0.00	0.00	0.00	XXX
85535		X	Iron stain, blood cells	0.00	0.00	0.00	0.00	0.00	0.00	0.00	0.00	0.00	0.00	XXX
85536		X	Iron stain peripheral blood	0.00	0.00	0.00	0.00	0.00	0.00	0.00	0.00	0.00	0.00	XXX
85540		X	Wbc alkaline phosphatase	0.00	0.00	0.00	0.00	0.00	0.00	0.00	0.00	0.00	0.00	XXX
85547		X	RBC mechanical fragility	0.00	0.00	0.00	0.00	0.00	0.00	0.00	0.00	0.00	0.00	XXX
85549		X	Muramidase	0.00	0.00	0.00	0.00	0.00	0.00	0.00	0.00	0.00	0.00	XXX
85555		X	RBC osmotic fragility	0.00	0.00	0.00	0.00	0.00	0.00	0.00	0.00	0.00	0.00	XXX
85557		X	RBC osmotic fragility	0.00	0.00	0.00	0.00	0.00	0.00	0.00	0.00	0.00	0.00	XXX
85576		X	Blood platelet aggregation	0.00	0.00	0.00	0.00	0.00	0.00	0.00	0.00	0.00	0.00	XXX
85576	26	A	Blood platelet aggregation	0.37	0.16	0.18	0.15	0.17	0.01	0.54	0.56	0.53	0.55	XXX
85585		X	Blood platelet estimation	0.00	0.00	0.00	0.00	0.00	0.00	0.00	0.00	0.00	0.00	XXX
85590		X	Platelet count, manual	0.00	0.00	0.00	0.00	0.00	0.00	0.00	0.00	0.00	0.00	XXX
85595		X	Platelet count, automated	0.00	0.00	0.00	0.00	0.00	0.00	0.00	0.00	0.00	0.00	XXX
85597		X	Platelet neutralization	0.00	0.00	0.00	0.00	0.00	0.00	0.00	0.00	0.00	0.00	XXX
85610		X	Prothrombin time	0.00	0.00	0.00	0.00	0.00	0.00	0.00	0.00	0.00	0.00	XXX
85611		X	Prothrombin test	0.00	0.00	0.00	0.00	0.00	0.00	0.00	0.00	0.00	0.00	XXX
85612		X	Viper venom prothrombin time	0.00	0.00	0.00	0.00	0.00	0.00	0.00	0.00	0.00	0.00	XXX
85613		X	Russell viper venom, diluted	0.00	0.00	0.00	0.00	0.00	0.00	0.00	0.00	0.00	0.00	XXX
85635		X	Reptilase test	0.00	0.00	0.00	0.00	0.00	0.00	0.00	0.00	0.00	0.00	XXX
85651		X	Rbc sed rate, nonautomated	0.00	0.00	0.00	0.00	0.00	0.00	0.00	0.00	0.00	0.00	XXX
85652		X	Rbc sed rate, automated	0.00	0.00	0.00	0.00	0.00	0.00	0.00	0.00	0.00	0.00	XXX
85660		X	RBC sickle cell test	0.00	0.00	0.00	0.00	0.00	0.00	0.00	0.00	0.00	0.00	XXX
85670		X	Thrombin time, plasma	0.00	0.00	0.00	0.00	0.00	0.00	0.00	0.00	0.00	0.00	XXX
85675		X	Thrombin time, titer	0.00	0.00	0.00	0.00	0.00	0.00	0.00	0.00	0.00	0.00	XXX
85705		X	Thromboplastin inhibition	0.00	0.00	0.00	0.00	0.00	0.00	0.00	0.00	0.00	0.00	XXX

[1] CPT codes and descriptions only are copyright 2000 American Medical Association. All Rights Reserved. Applicable FARS/DFARS Apply.
[2] Copyright 1994 American Dental Association. All rights reserved.
[3] + Indicates RVUs are not used for Medicare payment.
[4] PE RVUs = Practice Expense Relative Value Units.

ADDENDUM B.—RELATIVE VALUE UNITS (RVU'S) AND RELATED INFORMATION—Continued

CPT[1]/ HCPCS[2]	MOD	Status	Description	Physician Work RVUs[3]	Fully Implemented Non-Facility PE RVUs	Year 2001 Transitional Non-Facility PE RVUs	Fully Implemented Facility PE RVUs	Year 2001 Transitional Facility PE RVUs	Mal-Practice RVUs	Fully Implemented Non-Facility Total	Year 2001 Transitional Non-Facility Total	Fully Implemented Facility Total	Year 2001 Transitional Facility Total	Global
85730		X	Thromboplastin time, partial	0.00	0.00	0.00	0.00	0.00	0.00	0.00	0.00	0.00	0.00	XXX
85732		X	Thromboplastin time, partial	0.00	0.00	0.00	0.00	0.00	0.00	0.00	0.00	0.00	0.00	XXX
85810		X	Blood viscosity examination	0.00	0.00	0.00	0.00	0.00	0.00	0.00	0.00	0.00	0.00	XXX
85999		X	Hematology procedure	0.00	0.00	0.00	0.00	0.00	0.00	0.00	0.00	0.00	0.00	XXX
86000		X	Agglutinins, febrile	0.00	0.00	0.00	0.00	0.00	0.00	0.00	0.00	0.00	0.00	XXX
86001		X	Allergen specific igg	0.00	0.00	0.00	0.00	0.00	0.00	0.00	0.00	0.00	0.00	XXX
86003		X	Allergen specific IgE	0.00	0.00	0.00	0.00	0.00	0.00	0.00	0.00	0.00	0.00	XXX
86005		X	Allergen specific IgE	0.00	0.00	0.00	0.00	0.00	0.00	0.00	0.00	0.00	0.00	XXX
86021		X	WBC antibody identification	0.00	0.00	0.00	0.00	0.00	0.00	0.00	0.00	0.00	0.00	XXX
86022		X	Platelet antibodies	0.00	0.00	0.00	0.00	0.00	0.00	0.00	0.00	0.00	0.00	XXX
86023		X	Immunoglobulin assay	0.00	0.00	0.00	0.00	0.00	0.00	0.00	0.00	0.00	0.00	XXX
86038		X	Antinuclear antibodies	0.00	0.00	0.00	0.00	0.00	0.00	0.00	0.00	0.00	0.00	XXX
86039		X	Antinuclear antibodies (ANA)	0.00	0.00	0.00	0.00	0.00	0.00	0.00	0.00	0.00	0.00	XXX
86060		X	Antistreptolysin o, titer	0.00	0.00	0.00	0.00	0.00	0.00	0.00	0.00	0.00	0.00	XXX
86063		X	Antistreptolysin o, screen	0.00	0.00	0.00	0.00	0.00	0.00	0.00	0.00	0.00	0.00	XXX
86077		A	Physician blood bank service	0.94	0.48	0.44	0.40	0.38	0.03	1.45	1.41	1.37	1.35	XXX
86078		A	Physician blood bank service	0.94	0.50	0.47	0.40	0.39	0.03	1.47	1.44	1.37	1.36	XXX
86079		A	Physician blood bank service	0.94	0.50	0.47	0.41	0.40	0.03	1.47	1.44	1.38	1.37	XXX
86140		X	C-reactive protein	0.00	0.00	0.00	0.00	0.00	0.00	0.00	0.00	0.00	0.00	XXX
86146		X	Glycoprotein antibody	0.00	0.00	0.00	0.00	0.00	0.00	0.00	0.00	0.00	0.00	XXX
86147		X	Cardiolipin antibody	0.00	0.00	0.00	0.00	0.00	0.00	0.00	0.00	0.00	0.00	XXX
86148		X	Phospholipid antibody	0.00	0.00	0.00	0.00	0.00	0.00	0.00	0.00	0.00	0.00	XXX
86155		X	Chemotaxis assay	0.00	0.00	0.00	0.00	0.00	0.00	0.00	0.00	0.00	0.00	XXX
86156		X	Cold agglutinin, screen	0.00	0.00	0.00	0.00	0.00	0.00	0.00	0.00	0.00	0.00	XXX
86157		X	Cold agglutinin, titer	0.00	0.00	0.00	0.00	0.00	0.00	0.00	0.00	0.00	0.00	XXX
86160		X	Complement, antigen	0.00	0.00	0.00	0.00	0.00	0.00	0.00	0.00	0.00	0.00	XXX
86161		X	Complement/function activity	0.00	0.00	0.00	0.00	0.00	0.00	0.00	0.00	0.00	0.00	XXX
86162		X	Complement, total (CH50)	0.00	0.00	0.00	0.00	0.00	0.00	0.00	0.00	0.00	0.00	XXX
86171		X	Complement fixation, each	0.00	0.00	0.00	0.00	0.00	0.00	0.00	0.00	0.00	0.00	XXX
86185		X	Counterimmunoelectrophoresis	0.00	0.00	0.00	0.00	0.00	0.00	0.00	0.00	0.00	0.00	XXX
86215		X	Deoxyribonuclease, antibody	0.00	0.00	0.00	0.00	0.00	0.00	0.00	0.00	0.00	0.00	XXX
86225		X	DNA antibody	0.00	0.00	0.00	0.00	0.00	0.00	0.00	0.00	0.00	0.00	XXX
86226		X	DNA antibody, single strand	0.00	0.00	0.00	0.00	0.00	0.00	0.00	0.00	0.00	0.00	XXX
86235		X	Nuclear antigen antibody	0.00	0.00	0.00	0.00	0.00	0.00	0.00	0.00	0.00	0.00	XXX
86243		X	Fc receptor	0.00	0.00	0.00	0.00	0.00	0.00	0.00	0.00	0.00	0.00	XXX
86255		X	Fluorescent antibody, screen	0.00	0.00	0.00	0.00	0.00	0.00	0.00	0.00	0.00	0.00	XXX
86255	26	A	Fluorescent antibody, screen	0.37	0.16	0.18	0.16	0.18	0.01	0.54	0.56	0.54	0.56	XXX
86256		X	Fluorescent antibody, titer	0.00	0.00	0.00	0.00	0.00	0.00	0.00	0.00	0.00	0.00	XXX
86256	26	A	Fluorescent antibody, titer	0.37	0.16	0.18	0.16	0.18	0.01	0.54	0.56	0.54	0.56	XXX
86277		X	Growth hormone antibody	0.00	0.00	0.00	0.00	0.00	0.00	0.00	0.00	0.00	0.00	XXX
86280		X	Hemagglutination inhibition	0.00	0.00	0.00	0.00	0.00	0.00	0.00	0.00	0.00	0.00	XXX
86294		X	Immunoassay, tumor qual	0.00	0.00	0.00	0.00	0.00	0.00	0.00	0.00	0.00	0.00	XXX
86300		X	Immunoassay, tumor ca 15-3	0.00	0.00	0.00	0.00	0.00	0.00	0.00	0.00	0.00	0.00	XXX
86301		X	Immunoassay, tumor, ca 19-9	0.00	0.00	0.00	0.00	0.00	0.00	0.00	0.00	0.00	0.00	XXX
86304		X	Immunoassay, tumor ca 125	0.00	0.00	0.00	0.00	0.00	0.00	0.00	0.00	0.00	0.00	XXX
86308		X	Heterophile antibodies	0.00	0.00	0.00	0.00	0.00	0.00	0.00	0.00	0.00	0.00	XXX
86309		X	Heterophile antibodies	0.00	0.00	0.00	0.00	0.00	0.00	0.00	0.00	0.00	0.00	XXX
86310		X	Heterophile antibodies	0.00	0.00	0.00	0.00	0.00	0.00	0.00	0.00	0.00	0.00	XXX
86316		X	Immunoassay, tumor other	0.00	0.00	0.00	0.00	0.00	0.00	0.00	0.00	0.00	0.00	XXX
86317		X	Immunoassay,infectious agent	0.00	0.00	0.00	0.00	0.00	0.00	0.00	0.00	0.00	0.00	XXX
86318		X	Immunoassay,infectious agent	0.00	0.00	0.00	0.00	0.00	0.00	0.00	0.00	0.00	0.00	XXX
86320		X	Serum immunoelectrophoresis	0.00	0.00	0.00	0.00	0.00	0.00	0.00	0.00	0.00	0.00	XXX
86320	26	A	Serum immunoelectrophoresis	0.37	0.16	0.18	0.16	0.18	0.01	0.54	0.56	0.54	0.56	XXX
86325		X	Other immunoelectrophoresis	0.00	0.00	0.00	0.00	0.00	0.00	0.00	0.00	0.00	0.00	XXX
86325	26	A	Other immunoelectrophoresis	0.37	0.16	0.18	0.16	0.18	0.01	0.54	0.56	0.54	0.56	XXX
86327		X	Immunoelectrophoresis assay	0.00	0.00	0.00	0.00	0.00	0.00	0.00	0.00	0.00	0.00	XXX
86327	26	A	Immunoelectrophoresis assay	0.42	0.18	0.19	0.18	0.19	0.01	0.61	0.62	0.61	0.62	XXX
86329		X	Immunodiffusion	0.00	0.00	0.00	0.00	0.00	0.00	0.00	0.00	0.00	0.00	XXX
86331		X	Immunodiffusion ouchterlony	0.00	0.00	0.00	0.00	0.00	0.00	0.00	0.00	0.00	0.00	XXX
86332		X	Immune complex assay	0.00	0.00	0.00	0.00	0.00	0.00	0.00	0.00	0.00	0.00	XXX
86334		X	Immunofixation procedure	0.00	0.00	0.00	0.00	0.00	0.00	0.00	0.00	0.00	0.00	XXX
86334	26	A	Immunofixation procedure	0.37	0.16	0.18	0.16	0.18	0.01	0.54	0.56	0.54	0.56	XXX
86337		X	Insulin antibodies	0.00	0.00	0.00	0.00	0.00	0.00	0.00	0.00	0.00	0.00	XXX
86340		X	Intrinsic factor antibody	0.00	0.00	0.00	0.00	0.00	0.00	0.00	0.00	0.00	0.00	XXX
86341		X	Islet cell antibody	0.00	0.00	0.00	0.00	0.00	0.00	0.00	0.00	0.00	0.00	XXX
86343		X	Leukocyte histamine release	0.00	0.00	0.00	0.00	0.00	0.00	0.00	0.00	0.00	0.00	XXX
86344		X	Leukocyte phagocytosis	0.00	0.00	0.00	0.00	0.00	0.00	0.00	0.00	0.00	0.00	XXX
86353		X	Lymphocyte transformation	0.00	0.00	0.00	0.00	0.00	0.00	0.00	0.00	0.00	0.00	XXX
86359		X	T cells, total count	0.00	0.00	0.00	0.00	0.00	0.00	0.00	0.00	0.00	0.00	XXX
86360		X	T cell, absolute count/ratio	0.00	0.00	0.00	0.00	0.00	0.00	0.00	0.00	0.00	0.00	XXX
86361		X	T cell, absolute count	0.00	0.00	0.00	0.00	0.00	0.00	0.00	0.00	0.00	0.00	XXX
86376		X	Microsomal antibody	0.00	0.00	0.00	0.00	0.00	0.00	0.00	0.00	0.00	0.00	XXX
86378		X	Migration inhibitory factor	0.00	0.00	0.00	0.00	0.00	0.00	0.00	0.00	0.00	0.00	XXX
86382		X	Neutralization test, viral	0.00	0.00	0.00	0.00	0.00	0.00	0.00	0.00	0.00	0.00	XXX
86384		X	Nitroblue tetrazolium dye	0.00	0.00	0.00	0.00	0.00	0.00	0.00	0.00	0.00	0.00	XXX
86403		X	Particle agglutination test	0.00	0.00	0.00	0.00	0.00	0.00	0.00	0.00	0.00	0.00	XXX
86406		X	Particle agglutination test	0.00	0.00	0.00	0.00	0.00	0.00	0.00	0.00	0.00	0.00	XXX
86430		X	Rheumatoid factor test	0.00	0.00	0.00	0.00	0.00	0.00	0.00	0.00	0.00	0.00	XXX
86431		X	Rheumatoid factor, quant	0.00	0.00	0.00	0.00	0.00	0.00	0.00	0.00	0.00	0.00	XXX
86485		C	Skin test, candida	0.00	0.00	0.00	0.00	0.00	0.00	0.00	0.00	0.00	0.00	XXX
86490		A	Coccidioidomycosis skin test	0.00	0.29	0.29	NA	NA	0.02	0.31	0.31	NA	NA	XXX
86510		A	Histoplasmosis skin test	0.00	0.32	0.32	NA	NA	0.02	0.34	0.34	NA	NA	XXX
86580		A	TB intradermal test	0.00	0.25	0.25	NA	NA	0.02	0.27	0.27	NA	NA	XXX

[1] CPT codes and descriptions only are copyright 2000 American Medical Association. All Rights Reserved. Applicable FARS/DFARS Apply.
[2] Copyright 1994 American Dental Association. All rights reserved.
[3] + Indicates RVUs are not used for Medicare payment.
[4] PE RVUs = Practice Expense Relative Value Units.

ADDENDUM B.—RELATIVE VALUE UNITS (RVU'S) AND RELATED INFORMATION—Continued

CPT[1]/ HCPCS[2]	MOD	Status	Description	Physician Work RVUs[3]	Fully Implemented Non-Facility PE RVUs	Year 2001 Transitional Non-Facility PE RVUs	Fully Implemented Facility PE RVUs	Year 2001 Transitional Facility PE RVUs	Mal-Practice RVUs	Fully Implemented Non-Facility Total	Year 2001 Transitional Non-Facility Total	Fully Implemented Facility Total	Year 2001 Transitional Facility Total	Global
86585		A	TB tine test	0.00	0.20	0.20	NA	NA	0.01	0.21	0.21	NA	NA	XXX
86586		C	Skin test, unlisted	0.00	0.00	0.00	0.00	0.00	0.00	0.00	0.00	0.00	0.00	XXX
86590		X	Streptokinase, antibody	0.00	0.00	0.00	0.00	0.00	0.00	0.00	0.00	0.00	0.00	XXX
86592		X	Blood serology, qualitative	0.00	0.00	0.00	0.00	0.00	0.00	0.00	0.00	0.00	0.00	XXX
86593		X	Blood serology, quantitative	0.00	0.00	0.00	0.00	0.00	0.00	0.00	0.00	0.00	0.00	XXX
86602		X	Antinomyces antibody	0.00	0.00	0.00	0.00	0.00	0.00	0.00	0.00	0.00	0.00	XXX
86603		X	Adenovirus antibody	0.00	0.00	0.00	0.00	0.00	0.00	0.00	0.00	0.00	0.00	XXX
86606		X	Aspergillus antibody	0.00	0.00	0.00	0.00	0.00	0.00	0.00	0.00	0.00	0.00	XXX
86609		X	Bacterium antibody	0.00	0.00	0.00	0.00	0.00	0.00	0.00	0.00	0.00	0.00	XXX
86611		X	Bartonella antibody	0.00	0.00	0.00	0.00	0.00	0.00	0.00	0.00	0.00	0.00	XXX
86612		X	Blastomyces antibody	0.00	0.00	0.00	0.00	0.00	0.00	0.00	0.00	0.00	0.00	XXX
86615		X	Bordetella antibody	0.00	0.00	0.00	0.00	0.00	0.00	0.00	0.00	0.00	0.00	XXX
86617		X	Lyme disease antibody	0.00	0.00	0.00	0.00	0.00	0.00	0.00	0.00	0.00	0.00	XXX
86618		X	Lyme disease antibody	0.00	0.00	0.00	0.00	0.00	0.00	0.00	0.00	0.00	0.00	XXX
86619		X	Borrelia antibody	0.00	0.00	0.00	0.00	0.00	0.00	0.00	0.00	0.00	0.00	XXX
86622		X	Brucella antibody	0.00	0.00	0.00	0.00	0.00	0.00	0.00	0.00	0.00	0.00	XXX
86625		X	Campylobacter antibody	0.00	0.00	0.00	0.00	0.00	0.00	0.00	0.00	0.00	0.00	XXX
86628		X	Candida antibody	0.00	0.00	0.00	0.00	0.00	0.00	0.00	0.00	0.00	0.00	XXX
86631		X	Chlamydia antibody	0.00	0.00	0.00	0.00	0.00	0.00	0.00	0.00	0.00	0.00	XXX
86632		X	Chlamydia igm antibody	0.00	0.00	0.00	0.00	0.00	0.00	0.00	0.00	0.00	0.00	XXX
86635		X	Coccidioides antibody	0.00	0.00	0.00	0.00	0.00	0.00	0.00	0.00	0.00	0.00	XXX
86638		X	Q fever antibody	0.00	0.00	0.00	0.00	0.00	0.00	0.00	0.00	0.00	0.00	XXX
86641		X	Cryptococcus antibody	0.00	0.00	0.00	0.00	0.00	0.00	0.00	0.00	0.00	0.00	XXX
86644		X	CMV antibody	0.00	0.00	0.00	0.00	0.00	0.00	0.00	0.00	0.00	0.00	XXX
86645		X	CMV antibody, IgM	0.00	0.00	0.00	0.00	0.00	0.00	0.00	0.00	0.00	0.00	XXX
86648		X	Diphtheria antibody	0.00	0.00	0.00	0.00	0.00	0.00	0.00	0.00	0.00	0.00	XXX
86651		X	Encephalitis antibody	0.00	0.00	0.00	0.00	0.00	0.00	0.00	0.00	0.00	0.00	XXX
86652		X	Encephalitis antibody	0.00	0.00	0.00	0.00	0.00	0.00	0.00	0.00	0.00	0.00	XXX
86653		X	Encephalitis antibody	0.00	0.00	0.00	0.00	0.00	0.00	0.00	0.00	0.00	0.00	XXX
86654		X	Encephalitis antibody	0.00	0.00	0.00	0.00	0.00	0.00	0.00	0.00	0.00	0.00	XXX
86658		X	Enterovirus antibody	0.00	0.00	0.00	0.00	0.00	0.00	0.00	0.00	0.00	0.00	XXX
86663		X	Epstein-barr antibody	0.00	0.00	0.00	0.00	0.00	0.00	0.00	0.00	0.00	0.00	XXX
86664		X	Epstein-barr antibody	0.00	0.00	0.00	0.00	0.00	0.00	0.00	0.00	0.00	0.00	XXX
86665		X	Epstein-barr antibody	0.00	0.00	0.00	0.00	0.00	0.00	0.00	0.00	0.00	0.00	XXX
86666		X	Ehrlichia antibody	0.00	0.00	0.00	0.00	0.00	0.00	0.00	0.00	0.00	0.00	XXX
86668		X	Francisella tularensis	0.00	0.00	0.00	0.00	0.00	0.00	0.00	0.00	0.00	0.00	XXX
86671		X	Fungus antibody	0.00	0.00	0.00	0.00	0.00	0.00	0.00	0.00	0.00	0.00	XXX
86674		X	Giardia lamblia antibody	0.00	0.00	0.00	0.00	0.00	0.00	0.00	0.00	0.00	0.00	XXX
86677		X	Helicobacter pylori	0.00	0.00	0.00	0.00	0.00	0.00	0.00	0.00	0.00	0.00	XXX
86682		X	Helminth antibody	0.00	0.00	0.00	0.00	0.00	0.00	0.00	0.00	0.00	0.00	XXX
86683		X	Hemoglobin, fecal antibody	0.00	0.00	0.00	0.00	0.00	0.00	0.00	0.00	0.00	0.00	XXX
86684		X	Hemophilus influenza	0.00	0.00	0.00	0.00	0.00	0.00	0.00	0.00	0.00	0.00	XXX
86687		X	Htlv-i antibody	0.00	0.00	0.00	0.00	0.00	0.00	0.00	0.00	0.00	0.00	XXX
86688		X	Htlv-ii antibody	0.00	0.00	0.00	0.00	0.00	0.00	0.00	0.00	0.00	0.00	XXX
86689		X	HTLV/HIV confirmatory test	0.00	0.00	0.00	0.00	0.00	0.00	0.00	0.00	0.00	0.00	XXX
86692		X	Hepatitis, delta agent	0.00	0.00	0.00	0.00	0.00	0.00	0.00	0.00	0.00	0.00	XXX
86694		X	Herpes simplex test	0.00	0.00	0.00	0.00	0.00	0.00	0.00	0.00	0.00	0.00	XXX
86695		X	Herpes simplex test	0.00	0.00	0.00	0.00	0.00	0.00	0.00	0.00	0.00	0.00	XXX
86696		X	Herpes simplex type 2	0.00	0.00	0.00	0.00	0.00	0.00	0.00	0.00	0.00	0.00	XXX
86698		X	Histoplasma	0.00	0.00	0.00	0.00	0.00	0.00	0.00	0.00	0.00	0.00	XXX
86701		X	HIV-1	0.00	0.00	0.00	0.00	0.00	0.00	0.00	0.00	0.00	0.00	XXX
86702		X	HIV-2	0.00	0.00	0.00	0.00	0.00	0.00	0.00	0.00	0.00	0.00	XXX
86703		X	HIV-1/HIV-2, single assay	0.00	0.00	0.00	0.00	0.00	0.00	0.00	0.00	0.00	0.00	XXX
86704		X	Hep b core antibody, total	0.00	0.00	0.00	0.00	0.00	0.00	0.00	0.00	0.00	0.00	XXX
86705		X	Hep b core antibody, igm	0.00	0.00	0.00	0.00	0.00	0.00	0.00	0.00	0.00	0.00	XXX
86706		X	Hep b surface antibody	0.00	0.00	0.00	0.00	0.00	0.00	0.00	0.00	0.00	0.00	XXX
86707		X	Hep be antibody	0.00	0.00	0.00	0.00	0.00	0.00	0.00	0.00	0.00	0.00	XXX
86708		X	Hep a antibody, total	0.00	0.00	0.00	0.00	0.00	0.00	0.00	0.00	0.00	0.00	XXX
86709		X	Hep a antibody, igm	0.00	0.00	0.00	0.00	0.00	0.00	0.00	0.00	0.00	0.00	XXX
86710		X	Influenza virus antibody	0.00	0.00	0.00	0.00	0.00	0.00	0.00	0.00	0.00	0.00	XXX
86713		X	Legionella antibody	0.00	0.00	0.00	0.00	0.00	0.00	0.00	0.00	0.00	0.00	XXX
86717		X	Leishmania antibody	0.00	0.00	0.00	0.00	0.00	0.00	0.00	0.00	0.00	0.00	XXX
86720		X	Leptospira antibody	0.00	0.00	0.00	0.00	0.00	0.00	0.00	0.00	0.00	0.00	XXX
86723		X	Listeria monocytogenes ab	0.00	0.00	0.00	0.00	0.00	0.00	0.00	0.00	0.00	0.00	XXX
86727		X	Lymph choriomeningitis ab	0.00	0.00	0.00	0.00	0.00	0.00	0.00	0.00	0.00	0.00	XXX
86729		X	Lympho venereum antibody	0.00	0.00	0.00	0.00	0.00	0.00	0.00	0.00	0.00	0.00	XXX
86732		X	Mucormycosis antibody	0.00	0.00	0.00	0.00	0.00	0.00	0.00	0.00	0.00	0.00	XXX
86735		X	Mumps antibody	0.00	0.00	0.00	0.00	0.00	0.00	0.00	0.00	0.00	0.00	XXX
86738		X	Mycoplasma antibody	0.00	0.00	0.00	0.00	0.00	0.00	0.00	0.00	0.00	0.00	XXX
86741		X	Neisseria meningitidis	0.00	0.00	0.00	0.00	0.00	0.00	0.00	0.00	0.00	0.00	XXX
86744		X	Nocardia antibody	0.00	0.00	0.00	0.00	0.00	0.00	0.00	0.00	0.00	0.00	XXX
86747		X	Parvovirus antibody	0.00	0.00	0.00	0.00	0.00	0.00	0.00	0.00	0.00	0.00	XXX
86750		X	Malaria antibody	0.00	0.00	0.00	0.00	0.00	0.00	0.00	0.00	0.00	0.00	XXX
86753		X	Protozoa antibody nos	0.00	0.00	0.00	0.00	0.00	0.00	0.00	0.00	0.00	0.00	XXX
86756		X	Respiratory virus antibody	0.00	0.00	0.00	0.00	0.00	0.00	0.00	0.00	0.00	0.00	XXX
86757		X	Rickettsia antibody	0.00	0.00	0.00	0.00	0.00	0.00	0.00	0.00	0.00	0.00	XXX
86759		X	Rotavirus antibody	0.00	0.00	0.00	0.00	0.00	0.00	0.00	0.00	0.00	0.00	XXX
86762		X	Rubella antibody	0.00	0.00	0.00	0.00	0.00	0.00	0.00	0.00	0.00	0.00	XXX
86765		X	Rubeola antibody	0.00	0.00	0.00	0.00	0.00	0.00	0.00	0.00	0.00	0.00	XXX
86768		X	Salmonella antibody	0.00	0.00	0.00	0.00	0.00	0.00	0.00	0.00	0.00	0.00	XXX
86771		X	Shigella antibody	0.00	0.00	0.00	0.00	0.00	0.00	0.00	0.00	0.00	0.00	XXX
86774		X	Tetanus antibody	0.00	0.00	0.00	0.00	0.00	0.00	0.00	0.00	0.00	0.00	XXX
86777		X	Toxoplasma antibody	0.00	0.00	0.00	0.00	0.00	0.00	0.00	0.00	0.00	0.00	XXX

[1] CPT codes and descriptions only are copyright 2000 American Medical Association. All Rights Reserved. Applicable FARS/DFARS Apply.
[2] Copyright 1994 American Dental Association. All rights reserved.
[3] + Indicates RVUs are not used for Medicare payment.
[4] PE RVUs = Practice Expense Relative Value Units.

ADDENDUM B.—RELATIVE VALUE UNITS (RVU'S) AND RELATED INFORMATION—Continued

CPT[1]/ HCPCS[2]	MOD	Status	Description	Physician Work RVUs[3]	Fully Implemented Non-Facility PE RVUs	Year 2001 Transitional Non-Facility PE RVUs	Fully Implemented Facility PE RVUs	Year 2001 Transitional Facility PE RVUs	Mal-Practice RVUs	Fully Implemented Non-Facility Total	Year 2001 Transitional Non-Facility Total	Fully Implemented Facility Total	Year 2001 Transitional Facility Total	Global
86778		X	Toxoplasma antibody, igm	0.00	0.00	0.00	0.00	0.00	0.00	0.00	0.00	0.00	0.00	XXX
86781		X	Treponema pallidum, confirm	0.00	0.00	0.00	0.00	0.00	0.00	0.00	0.00	0.00	0.00	XXX
86784		X	Trichinella antibody	0.00	0.00	0.00	0.00	0.00	0.00	0.00	0.00	0.00	0.00	XXX
86787		X	Varicella-zoster antibody	0.00	0.00	0.00	0.00	0.00	0.00	0.00	0.00	0.00	0.00	XXX
86790		X	Virus antibody nos	0.00	0.00	0.00	0.00	0.00	0.00	0.00	0.00	0.00	0.00	XXX
86793		X	Yersinia antibody	0.00	0.00	0.00	0.00	0.00	0.00	0.00	0.00	0.00	0.00	XXX
86800		X	Thyroglobulin antibody	0.00	0.00	0.00	0.00	0.00	0.00	0.00	0.00	0.00	0.00	XXX
86803		X	Hepatitis c ab test	0.00	0.00	0.00	0.00	0.00	0.00	0.00	0.00	0.00	0.00	XXX
86804		X	Hep c ab test, confirm	0.00	0.00	0.00	0.00	0.00	0.00	0.00	0.00	0.00	0.00	XXX
86805		X	Lymphocytotoxicity assay	0.00	0.00	0.00	0.00	0.00	0.00	0.00	0.00	0.00	0.00	XXX
86806		X	Lymphocytotoxicity assay	0.00	0.00	0.00	0.00	0.00	0.00	0.00	0.00	0.00	0.00	XXX
86807		X	Cytotoxic antibody screening	0.00	0.00	0.00	0.00	0.00	0.00	0.00	0.00	0.00	0.00	XXX
86808		X	Cytotoxic antibody screening	0.00	0.00	0.00	0.00	0.00	0.00	0.00	0.00	0.00	0.00	XXX
86812		X	HLA typing, A, B, or C	0.00	0.00	0.00	0.00	0.00	0.00	0.00	0.00	0.00	0.00	XXX
86813		X	HLA typing, A, B, or C	0.00	0.00	0.00	0.00	0.00	0.00	0.00	0.00	0.00	0.00	XXX
86816		X	HLA typing, DR/DQ	0.00	0.00	0.00	0.00	0.00	0.00	0.00	0.00	0.00	0.00	XXX
86817		X	HLA typing, DR/DQ	0.00	0.00	0.00	0.00	0.00	0.00	0.00	0.00	0.00	0.00	XXX
86821		X	Lymphocyte culture, mixed	0.00	0.00	0.00	0.00	0.00	0.00	0.00	0.00	0.00	0.00	XXX
86822		X	Lymphocyte culture, primed	0.00	0.00	0.00	0.00	0.00	0.00	0.00	0.00	0.00	0.00	XXX
86849		X	Immunology procedure	0.00	0.00	0.00	0.00	0.00	0.00	0.00	0.00	0.00	0.00	XXX
86850		X	RBC antibody screen	0.00	0.00	0.00	0.00	0.00	0.00	0.00	0.00	0.00	0.00	XXX
86860		X	RBC antibody elution	0.00	0.00	0.00	0.00	0.00	0.00	0.00	0.00	0.00	0.00	XXX
86870		X	RBC antibody identification	0.00	0.00	0.00	0.00	0.00	0.00	0.00	0.00	0.00	0.00	XXX
86880		X	Coombs test	0.00	0.00	0.00	0.00	0.00	0.00	0.00	0.00	0.00	0.00	XXX
86885		X	Coombs test	0.00	0.00	0.00	0.00	0.00	0.00	0.00	0.00	0.00	0.00	XXX
86886		X	Coombs test	0.00	0.00	0.00	0.00	0.00	0.00	0.00	0.00	0.00	0.00	XXX
86890		X	Autologous blood process	0.00	0.00	0.00	0.00	0.00	0.00	0.00	0.00	0.00	0.00	XXX
86891		X	Autologous blood, op salvage	0.00	0.00	0.00	0.00	0.00	0.00	0.00	0.00	0.00	0.00	XXX
86900		X	Blood typing, ABO	0.00	0.00	0.00	0.00	0.00	0.00	0.00	0.00	0.00	0.00	XXX
86901		X	Blood typing, Rh (D)	0.00	0.00	0.00	0.00	0.00	0.00	0.00	0.00	0.00	0.00	XXX
86903		X	Blood typing, antigen screen	0.00	0.00	0.00	0.00	0.00	0.00	0.00	0.00	0.00	0.00	XXX
86904		X	Blood typing, patient serum	0.00	0.00	0.00	0.00	0.00	0.00	0.00	0.00	0.00	0.00	XXX
86905		X	Blood typing, RBC antigens	0.00	0.00	0.00	0.00	0.00	0.00	0.00	0.00	0.00	0.00	XXX
86906		X	Blood typing, Rh phenotype	0.00	0.00	0.00	0.00	0.00	0.00	0.00	0.00	0.00	0.00	XXX
86910		N	Blood typing, paternity test	0.00	0.00	0.00	0.00	0.00	0.00	0.00	0.00	0.00	0.00	XXX
86911		N	Blood typing, antigen system	0.00	0.00	0.00	0.00	0.00	0.00	0.00	0.00	0.00	0.00	XXX
86915		X	Bone marrow/stem cell prep	0.00	0.00	0.00	0.00	0.00	0.00	0.00	0.00	0.00	0.00	XXX
86920		X	Compatibility test	0.00	0.00	0.00	0.00	0.00	0.00	0.00	0.00	0.00	0.00	XXX
86921		X	Compatibility test	0.00	0.00	0.00	0.00	0.00	0.00	0.00	0.00	0.00	0.00	XXX
86922		X	Compatibility test	0.00	0.00	0.00	0.00	0.00	0.00	0.00	0.00	0.00	0.00	XXX
86927		X	Plasma, fresh frozen	0.00	0.00	0.00	0.00	0.00	0.00	0.00	0.00	0.00	0.00	XXX
86930		X	Frozen blood prep	0.00	0.00	0.00	0.00	0.00	0.00	0.00	0.00	0.00	0.00	XXX
86931		X	Frozen blood thaw	0.00	0.00	0.00	0.00	0.00	0.00	0.00	0.00	0.00	0.00	XXX
86932		X	Frozen blood freeze/thaw	0.00	0.00	0.00	0.00	0.00	0.00	0.00	0.00	0.00	0.00	XXX
86940		X	Hemolysins/agglutinins, auto	0.00	0.00	0.00	0.00	0.00	0.00	0.00	0.00	0.00	0.00	XXX
86941		X	Hemolysins/agglutinins	0.00	0.00	0.00	0.00	0.00	0.00	0.00	0.00	0.00	0.00	XXX
86945		X	Blood product/irradiation	0.00	0.00	0.00	0.00	0.00	0.00	0.00	0.00	0.00	0.00	XXX
86950		X	Leukacyte transfusion	0.00	0.00	0.00	0.00	0.00	0.00	0.00	0.00	0.00	0.00	XXX
86965		X	Pooling blood platelets	0.00	0.00	0.00	0.00	0.00	0.00	0.00	0.00	0.00	0.00	XXX
86970		X	RBC pretreatment	0.00	0.00	0.00	0.00	0.00	0.00	0.00	0.00	0.00	0.00	XXX
86971		X	RBC pretreatment	0.00	0.00	0.00	0.00	0.00	0.00	0.00	0.00	0.00	0.00	XXX
86972		X	RBC pretreatment	0.00	0.00	0.00	0.00	0.00	0.00	0.00	0.00	0.00	0.00	XXX
86975		X	RBC pretreatment, serum	0.00	0.00	0.00	0.00	0.00	0.00	0.00	0.00	0.00	0.00	XXX
86976		X	RBC pretreatment, serum	0.00	0.00	0.00	0.00	0.00	0.00	0.00	0.00	0.00	0.00	XXX
86977		X	RBC pretreatment, serum	0.00	0.00	0.00	0.00	0.00	0.00	0.00	0.00	0.00	0.00	XXX
86978		X	RBC pretreatment, serum	0.00	0.00	0.00	0.00	0.00	0.00	0.00	0.00	0.00	0.00	XXX
86985		X	Split blood or products	0.00	0.00	0.00	0.00	0.00	0.00	0.00	0.00	0.00	0.00	XXX
86999		X	Transfusion procedure	0.00	0.00	0.00	0.00	0.00	0.00	0.00	0.00	0.00	0.00	XXX
87001		X	Small animal inoculation	0.00	0.00	0.00	0.00	0.00	0.00	0.00	0.00	0.00	0.00	XXX
87003		X	Small animal inoculation	0.00	0.00	0.00	0.00	0.00	0.00	0.00	0.00	0.00	0.00	XXX
87015		X	Specimen concentration	0.00	0.00	0.00	0.00	0.00	0.00	0.00	0.00	0.00	0.00	XXX
87040		X	Blood culture for bacteria	0.00	0.00	0.00	0.00	0.00	0.00	0.00	0.00	0.00	0.00	XXX
87045		X	Stool culture, bacteria	0.00	0.00	0.00	0.00	0.00	0.00	0.00	0.00	0.00	0.00	XXX
87046		X	Stool cultr, bacteria, each	0.00	0.00	0.00	0.00	0.00	0.00	0.00	0.00	0.00	0.00	XXX
87060		D	Nose/throat culture, bact	0.00	0.00	0.00	0.00	0.00	0.00	0.00	0.00	0.00	0.00	XXX
87070		X	Culture, bacteria, other	0.00	0.00	0.00	0.00	0.00	0.00	0.00	0.00	0.00	0.00	XXX
87071		X	Culture bacteri aerobic othr	0.00	0.00	0.00	0.00	0.00	0.00	0.00	0.00	0.00	0.00	XXX
87072		D	Culture of specimen by kit	0.00	0.00	0.00	0.00	0.00	0.00	0.00	0.00	0.00	0.00	XXX
87073		X	Culture bacteria anaerobic	0.00	0.00	0.00	0.00	0.00	0.00	0.00	0.00	0.00	0.00	XXX
87075		X	Culture bacteria anaerobic	0.00	0.00	0.00	0.00	0.00	0.00	0.00	0.00	0.00	0.00	XXX
87076		X	Culture anaerobe ident, each	0.00	0.00	0.00	0.00	0.00	0.00	0.00	0.00	0.00	0.00	XXX
87077		X	Culture aerobic identify	0.00	0.00	0.00	0.00	0.00	0.00	0.00	0.00	0.00	0.00	XXX
87081		X	Culture screen only	0.00	0.00	0.00	0.00	0.00	0.00	0.00	0.00	0.00	0.00	XXX
87082		D	Culture of specimen by kit	0.00	0.00	0.00	0.00	0.00	0.00	0.00	0.00	0.00	0.00	XXX
87083		D	Culture of specimen by kit	0.00	0.00	0.00	0.00	0.00	0.00	0.00	0.00	0.00	0.00	XXX
87084		X	Culture of specimen by kit	0.00	0.00	0.00	0.00	0.00	0.00	0.00	0.00	0.00	0.00	XXX
87085		D	Culture of specimen by kit	0.00	0.00	0.00	0.00	0.00	0.00	0.00	0.00	0.00	0.00	XXX
87086		X	Urine culture/colony count	0.00	0.00	0.00	0.00	0.00	0.00	0.00	0.00	0.00	0.00	XXX
87087		D	Urine bacteria culture	0.00	0.00	0.00	0.00	0.00	0.00	0.00	0.00	0.00	0.00	XXX
87088		X	Urine bacteria culture	0.00	0.00	0.00	0.00	0.00	0.00	0.00	0.00	0.00	0.00	XXX
87101		X	Skin fungi culture	0.00	0.00	0.00	0.00	0.00	0.00	0.00	0.00	0.00	0.00	XXX
87102		X	Fungus isolation culture	0.00	0.00	0.00	0.00	0.00	0.00	0.00	0.00	0.00	0.00	XXX
87103		X	Blood fungus culture	0.00	0.00	0.00	0.00	0.00	0.00	0.00	0.00	0.00	0.00	XXX

[1] CPT codes and descriptions only are copyright 2000 American Medical Association. All Rights Reserved. Applicable FARS/DFARS Apply.
[2] Copyright 1994 American Dental Association. All rights reserved.
[3] + Indicates RVUs are not used for Medicare payment.
[4] PE RVUs = Practice Expense Relative Value Units.

ADDENDUM B.—RELATIVE VALUE UNITS (RVU'S) AND RELATED INFORMATION—Continued

CPT[1]/ HCPCS[2]	MOD	Status	Description	Physician Work RVUs[3]	Fully Implemented Non-Facility PE RVUs	Year 2001 Transitional Non-Facility PE RVUs	Fully Implemented Facility PE RVUs	Year 2001 Transitional Facility PE RVUs	Mal-Practice RVUs	Fully Implemented Non-Facility Total	Year 2001 Transitional Non-Facility Total	Fully Implemented Facility Total	Year 2001 Transitional Facility Total	Global
87106		X	Fungi identification, yeast	0.00	0.00	0.00	0.00	0.00	0.00	0.00	0.00	0.00	0.00	XXX
87107		X	Fungi identification, mold	0.00	0.00	0.00	0.00	0.00	0.00	0.00	0.00	0.00	0.00	XXX
87109		X	Mycoplasma	0.00	0.00	0.00	0.00	0.00	0.00	0.00	0.00	0.00	0.00	XXX
87110		X	Chlamydia culture	0.00	0.00	0.00	0.00	0.00	0.00	0.00	0.00	0.00	0.00	XXX
87116		X	Mycobacteria culture	0.00	0.00	0.00	0.00	0.00	0.00	0.00	0.00	0.00	0.00	XXX
87117		D	Mycobacteria culture	0.00	0.00	0.00	0.00	0.00	0.00	0.00	0.00	0.00	0.00	XXX
87118		X	Mycobacteric identification	0.00	0.00	0.00	0.00	0.00	0.00	0.00	0.00	0.00	0.00	XXX
87140		X	Cultur type immunofluoresc	0.00	0.00	0.00	0.00	0.00	0.00	0.00	0.00	0.00	0.00	XXX
87143		X	Culture typing, glc/hplc	0.00	0.00	0.00	0.00	0.00	0.00	0.00	0.00	0.00	0.00	XXX
87145		X	Culture typing, phage method	0.00	0.00	0.00	0.00	0.00	0.00	0.00	0.00	0.00	0.00	XXX
87147		X	Culture type, immunologic	0.00	0.00	0.00	0.00	0.00	0.00	0.00	0.00	0.00	0.00	XXX
87149		X	Culture type, nucleic acid	0.00	0.00	0.00	0.00	0.00	0.00	0.00	0.00	0.00	0.00	XXX
87151		D	Culture typing, serologic	0.00	0.00	0.00	0.00	0.00	0.00	0.00	0.00	0.00	0.00	XXX
87152		X	Culture type pulse field gel	0.00	0.00	0.00	0.00	0.00	0.00	0.00	0.00	0.00	0.00	XXX
87155		D	Culture typing, precipitin	0.00	0.00	0.00	0.00	0.00	0.00	0.00	0.00	0.00	0.00	XXX
87158		X	Culture typing, added method	0.00	0.00	0.00	0.00	0.00	0.00	0.00	0.00	0.00	0.00	XXX
87163		D	Special microbiology culture	0.00	0.00	0.00	0.00	0.00	0.00	0.00	0.00	0.00	0.00	XXX
87164		X	Dark field examination	0.00	0.00	0.00	0.00	0.00	0.00	0.00	0.00	0.00	0.00	XXX
87164	26	A	Dark field examination	0.37	0.17	0.18	0.16	0.18	0.01	0.55	0.56	0.54	0.56	XXX
87166		X	Dark field examination	0.00	0.00	0.00	0.00	0.00	0.00	0.00	0.00	0.00	0.00	XXX
87168		X	Macroscopic exam arthropod	0.00	0.00	0.00	0.00	0.00	0.00	0.00	0.00	0.00	0.00	XXX
87169		X	Macacroscopic exam parasite	0.00	0.00	0.00	0.00	0.00	0.00	0.00	0.00	0.00	0.00	XXX
87172		X	Pinworm exam	0.00	0.00	0.00	0.00	0.00	0.00	0.00	0.00	0.00	0.00	XXX
87174		D	Endotoxin, bacterial	0.00	0.00	0.00	0.00	0.00	0.00	0.00	0.00	0.00	0.00	XXX
87175		D	Assay, endotoxin, bacterial	0.00	0.00	0.00	0.00	0.00	0.00	0.00	0.00	0.00	0.00	XXX
87176		X	Tissue homogenization, cultr	0.00	0.00	0.00	0.00	0.00	0.00	0.00	0.00	0.00	0.00	XXX
87177		X	Ova and parasites smears	0.00	0.00	0.00	0.00	0.00	0.00	0.00	0.00	0.00	0.00	XXX
87181		X	Microbe susceptible, diffuse	0.00	0.00	0.00	0.00	0.00	0.00	0.00	0.00	0.00	0.00	XXX
87184		X	Microbe susceptible, disk	0.00	0.00	0.00	0.00	0.00	0.00	0.00	0.00	0.00	0.00	XXX
87185		X	Microbe susceptible, enzyme	0.00	0.00	0.00	0.00	0.00	0.00	0.00	0.00	0.00	0.00	XXX
87186		X	Microbe susceptible, mic	0.00	0.00	0.00	0.00	0.00	0.00	0.00	0.00	0.00	0.00	XXX
87187		X	Microbe susceptible, mlc	0.00	0.00	0.00	0.00	0.00	0.00	0.00	0.00	0.00	0.00	XXX
87188		X	Microbe suscept, macrobroth	0.00	0.00	0.00	0.00	0.00	0.00	0.00	0.00	0.00	0.00	XXX
87190		X	Microbe suscept, mycobacteri	0.00	0.00	0.00	0.00	0.00	0.00	0.00	0.00	0.00	0.00	XXX
87192		D	Antibiotic sensitivity, each	0.00	0.00	0.00	0.00	0.00	0.00	0.00	0.00	0.00	0.00	XXX
87197		X	Bactericidal level, serum	0.00	0.00	0.00	0.00	0.00	0.00	0.00	0.00	0.00	0.00	XXX
87205		X	Smear, gram stain	0.00	0.00	0.00	0.00	0.00	0.00	0.00	0.00	0.00	0.00	XXX
87206		X	Smear, fluorescent/acid stai	0.00	0.00	0.00	0.00	0.00	0.00	0.00	0.00	0.00	0.00	XXX
87207		X	Smear, special stain	0.00	0.00	0.00	0.00	0.00	0.00	0.00	0.00	0.00	0.00	XXX
87207	26	A	Smear, special stain	0.37	0.16	0.18	0.16	0.18	0.01	0.54	0.56	0.54	0.56	XXX
87208		X	Smear, stain & interpret	0.00	0.00	0.00	0.00	0.00	0.00	0.00	0.00	0.00	0.00	XXX
87210		X	Smear, wet mount, saline/ink	0.00	0.00	0.00	0.00	0.00	0.00	0.00	0.00	0.00	0.00	XXX
87211		D	Smear, stain & interpret	0.00	0.00	0.00	0.00	0.00	0.00	0.00	0.00	0.00	0.00	XXX
87220		X	Tissue exam for fungi	0.00	0.00	0.00	0.00	0.00	0.00	0.00	0.00	0.00	0.00	XXX
87230		X	Assay, toxin or antitoxin	0.00	0.00	0.00	0.00	0.00	0.00	0.00	0.00	0.00	0.00	XXX
87250		X	Virus inoculate, eggs/animal	0.00	0.00	0.00	0.00	0.00	0.00	0.00	0.00	0.00	0.00	XXX
87252		X	Virus inoculation, tissue	0.00	0.00	0.00	0.00	0.00	0.00	0.00	0.00	0.00	0.00	XXX
87253		X	Virus inoculate tissue, addl	0.00	0.00	0.00	0.00	0.00	0.00	0.00	0.00	0.00	0.00	XXX
87254		X	Virus inoculation, shell via	0.00	0.00	0.00	0.00	0.00	0.00	0.00	0.00	0.00	0.00	XXX
87260		X	Adenovirus ag, if	0.00	0.00	0.00	0.00	0.00	0.00	0.00	0.00	0.00	0.00	XXX
87265		X	Pertussis ag, if	0.00	0.00	0.00	0.00	0.00	0.00	0.00	0.00	0.00	0.00	XXX
87270		X	Chlamydia trachomatis ag, if	0.00	0.00	0.00	0.00	0.00	0.00	0.00	0.00	0.00	0.00	XXX
87272		X	Cryptosporidum/gardia ag, if	0.00	0.00	0.00	0.00	0.00	0.00	0.00	0.00	0.00	0.00	XXX
87273		X	Herpes simplex 2, ag, if	0.00	0.00	0.00	0.00	0.00	0.00	0.00	0.00	0.00	0.00	XXX
87274		X	Herpes simplex 1, ag, if	0.00	0.00	0.00	0.00	0.00	0.00	0.00	0.00	0.00	0.00	XXX
87275		X	Influenza b, ag, if	0.00	0.00	0.00	0.00	0.00	0.00	0.00	0.00	0.00	0.00	XXX
87276		X	Influenza a, ag, if	0.00	0.00	0.00	0.00	0.00	0.00	0.00	0.00	0.00	0.00	XXX
87277		X	Legionella micdadei, ag, if	0.00	0.00	0.00	0.00	0.00	0.00	0.00	0.00	0.00	0.00	XXX
87278		X	Legion pneumophilia ag, if	0.00	0.00	0.00	0.00	0.00	0.00	0.00	0.00	0.00	0.00	XXX
87279		X	Parainfluenza, ag, if	0.00	0.00	0.00	0.00	0.00	0.00	0.00	0.00	0.00	0.00	XXX
87280		X	Respiratory syncytial ag, if	0.00	0.00	0.00	0.00	0.00	0.00	0.00	0.00	0.00	0.00	XXX
87281		X	Pneumocystis carinii, ag, if	0.00	0.00	0.00	0.00	0.00	0.00	0.00	0.00	0.00	0.00	XXX
87283		X	Rubeola, ag, if	0.00	0.00	0.00	0.00	0.00	0.00	0.00	0.00	0.00	0.00	XXX
87285		X	Treponema pallidum, ag, if	0.00	0.00	0.00	0.00	0.00	0.00	0.00	0.00	0.00	0.00	XXX
87290		X	Varicella zoster, ag, if	0.00	0.00	0.00	0.00	0.00	0.00	0.00	0.00	0.00	0.00	XXX
87299		X	Antibody detection, nos, if	0.00	0.00	0.00	0.00	0.00	0.00	0.00	0.00	0.00	0.00	XXX
87300		X	Ag detection, polyval, if	0.00	0.00	0.00	0.00	0.00	0.00	0.00	0.00	0.00	0.00	XXX
87301		X	Adenovirus ag, eia	0.00	0.00	0.00	0.00	0.00	0.00	0.00	0.00	0.00	0.00	XXX
87320		X	Chylmd trach ag, eia	0.00	0.00	0.00	0.00	0.00	0.00	0.00	0.00	0.00	0.00	XXX
87324		X	Clostridium ag, eia	0.00	0.00	0.00	0.00	0.00	0.00	0.00	0.00	0.00	0.00	XXX
87327		X	Cryptococcus neoform ag, eia	0.00	0.00	0.00	0.00	0.00	0.00	0.00	0.00	0.00	0.00	XXX
87328		X	Cryptospor ag, eia	0.00	0.00	0.00	0.00	0.00	0.00	0.00	0.00	0.00	0.00	XXX
87332		X	Cytomegalovirus ag, eia	0.00	0.00	0.00	0.00	0.00	0.00	0.00	0.00	0.00	0.00	XXX
87335		X	E coli 0157 ag, eia	0.00	0.00	0.00	0.00	0.00	0.00	0.00	0.00	0.00	0.00	XXX
87336		X	Entamoeb hist dispr, ag, eia	0.00	0.00	0.00	0.00	0.00	0.00	0.00	0.00	0.00	0.00	XXX
87337		X	Entamoeb hist group, ag, eia	0.00	0.00	0.00	0.00	0.00	0.00	0.00	0.00	0.00	0.00	XXX
87338		X	Hpylori, stool, eia	0.00	0.00	0.00	0.00	0.00	0.00	0.00	0.00	0.00	0.00	XXX
87339		X	Hpylori ag, eia	0.00	0.00	0.00	0.00	0.00	0.00	0.00	0.00	0.00	0.00	XXX
87340		X	Hepatitis b surface ag, eia	0.00	0.00	0.00	0.00	0.00	0.00	0.00	0.00	0.00	0.00	XXX
87341		X	Hepatitis b surface, ag, eia	0.00	0.00	0.00	0.00	0.00	0.00	0.00	0.00	0.00	0.00	XXX
87350		X	Hepatitis be ag, eia	0.00	0.00	0.00	0.00	0.00	0.00	0.00	0.00	0.00	0.00	XXX
87380		X	Hepatitis delta ag, eia	0.00	0.00	0.00	0.00	0.00	0.00	0.00	0.00	0.00	0.00	XXX
87385		X	Histoplasma capsul ag, eia	0.00	0.00	0.00	0.00	0.00	0.00	0.00	0.00	0.00	0.00	XXX

[1] CPT codes and descriptions only are copyright 2000 American Medical Association. All Rights Reserved. Applicable FARS/DFARS Apply.
[2] Copyright 1994 American Dental Association. All rights reserved.
[3] + Indicates RVUs are not used for Medicare payment.
[4] PE RVUs = Practice Expense Relative Value Units.

ADDENDUM B.—RELATIVE VALUE UNITS (RVU'S) AND RELATED INFORMATION—Continued

CPT[1]/ HCPCS[2]	MOD	Status	Description	Physician Work RVUs[3]	Fully Implemented Non-Facility PE RVUs	Year 2001 Transitional Non-Facility PE RVUs	Fully Implemented Facility PE RVUs	Year 2001 Transitional Facility PE RVUs	Mal-Practice RVUs	Fully Implemented Non-Facility Total	Year 2001 Transitional Non-Facility Total	Fully Implemented Facility Total	Year 2001 Transitional Facility Total	Global
87390		X	Hiv-1 ag, eia	0.00	0.00	0.00	0.00	0.00	0.00	0.00	0.00	0.00	0.00	XXX
87391		X	Hiv-2 ag, eia	0.00	0.00	0.00	0.00	0.00	0.00	0.00	0.00	0.00	0.00	XXX
87400		X	Influenza a/b, ag, eia	0.00	0.00	0.00	0.00	0.00	0.00	0.00	0.00	0.00	0.00	XXX
87420		X	Resp syncytial ag, eia	0.00	0.00	0.00	0.00	0.00	0.00	0.00	0.00	0.00	0.00	XXX
87425		X	Rotavirus ag, eia	0.00	0.00	0.00	0.00	0.00	0.00	0.00	0.00	0.00	0.00	XXX
87427		X	Shiga-like toxin ag, eia	0.00	0.00	0.00	0.00	0.00	0.00	0.00	0.00	0.00	0.00	XXX
87430		X	Strep a ag, eia	0.00	0.00	0.00	0.00	0.00	0.00	0.00	0.00	0.00	0.00	XXX
87449		X	Ag detect nos, eia, mult	0.00	0.00	0.00	0.00	0.00	0.00	0.00	0.00	0.00	0.00	XXX
87450		X	Ag detect nos, eia, single	0.00	0.00	0.00	0.00	0.00	0.00	0.00	0.00	0.00	0.00	XXX
87451		X	Ag detect polyval, eia, mult	0.00	0.00	0.00	0.00	0.00	0.00	0.00	0.00	0.00	0.00	XXX
87470		X	Bartonella, dna, dir probe	0.00	0.00	0.00	0.00	0.00	0.00	0.00	0.00	0.00	0.00	XXX
87471		X	Bartonella, dna, amp probe	0.00	0.00	0.00	0.00	0.00	0.00	0.00	0.00	0.00	0.00	XXX
87472		X	Bartonella, dna, quant	0.00	0.00	0.00	0.00	0.00	0.00	0.00	0.00	0.00	0.00	XXX
87475		X	Lyme dis, dna, dir probe	0.00	0.00	0.00	0.00	0.00	0.00	0.00	0.00	0.00	0.00	XXX
87476		X	Lyme dis, dna, amp probe	0.00	0.00	0.00	0.00	0.00	0.00	0.00	0.00	0.00	0.00	XXX
87477		X	Lyme dis, dna, quant	0.00	0.00	0.00	0.00	0.00	0.00	0.00	0.00	0.00	0.00	XXX
87480		X	Candida, dna, dir probe	0.00	0.00	0.00	0.00	0.00	0.00	0.00	0.00	0.00	0.00	XXX
87481		X	Candida, dna, amp probe	0.00	0.00	0.00	0.00	0.00	0.00	0.00	0.00	0.00	0.00	XXX
87482		X	Candida, dna, quant	0.00	0.00	0.00	0.00	0.00	0.00	0.00	0.00	0.00	0.00	XXX
87485		X	Chylmd pneum, dna, dir probe	0.00	0.00	0.00	0.00	0.00	0.00	0.00	0.00	0.00	0.00	XXX
87486		X	Chylmd pneum, dna, amp probe	0.00	0.00	0.00	0.00	0.00	0.00	0.00	0.00	0.00	0.00	XXX
87487		X	Chylmd pneum, dna, quant	0.00	0.00	0.00	0.00	0.00	0.00	0.00	0.00	0.00	0.00	XXX
87490		X	Chylmd trach, dna, dir probe	0.00	0.00	0.00	0.00	0.00	0.00	0.00	0.00	0.00	0.00	XXX
87491		X	Chylmd trach, dna, amp probe	0.00	0.00	0.00	0.00	0.00	0.00	0.00	0.00	0.00	0.00	XXX
87492		X	Chylmd trach, dna, quant	0.00	0.00	0.00	0.00	0.00	0.00	0.00	0.00	0.00	0.00	XXX
87495		X	Cytomeg, dna, dir probe	0.00	0.00	0.00	0.00	0.00	0.00	0.00	0.00	0.00	0.00	XXX
87496		X	Cytomeg, dna, amp probe	0.00	0.00	0.00	0.00	0.00	0.00	0.00	0.00	0.00	0.00	XXX
87497		X	Cytomeg, dna, quant	0.00	0.00	0.00	0.00	0.00	0.00	0.00	0.00	0.00	0.00	XXX
87510		X	Gardner vag, dna, dir probe	0.00	0.00	0.00	0.00	0.00	0.00	0.00	0.00	0.00	0.00	XXX
87511		X	Gardner vag, dna, amp probe	0.00	0.00	0.00	0.00	0.00	0.00	0.00	0.00	0.00	0.00	XXX
87512		X	Gardner vag, dna, quant	0.00	0.00	0.00	0.00	0.00	0.00	0.00	0.00	0.00	0.00	XXX
87515		X	Hepatitis b, dna, dir probe	0.00	0.00	0.00	0.00	0.00	0.00	0.00	0.00	0.00	0.00	XXX
87516		X	Hepatitis b , dna, amp probe	0.00	0.00	0.00	0.00	0.00	0.00	0.00	0.00	0.00	0.00	XXX
87517		X	Hepatitis b , dna, quant	0.00	0.00	0.00	0.00	0.00	0.00	0.00	0.00	0.00	0.00	XXX
87520		X	Hepatitis c , rna, dir probe	0.00	0.00	0.00	0.00	0.00	0.00	0.00	0.00	0.00	0.00	XXX
87521		X	Hepatitis c , rna, amp probe	0.00	0.00	0.00	0.00	0.00	0.00	0.00	0.00	0.00	0.00	XXX
87522		X	Hepatitis c, rna, quant	0.00	0.00	0.00	0.00	0.00	0.00	0.00	0.00	0.00	0.00	XXX
87525		X	Hepatitis g , dna, dir probe	0.00	0.00	0.00	0.00	0.00	0.00	0.00	0.00	0.00	0.00	XXX
87526		X	Hepatitis g, dna, amp probe	0.00	0.00	0.00	0.00	0.00	0.00	0.00	0.00	0.00	0.00	XXX
87527		X	Hepatitis g, dna, quant	0.00	0.00	0.00	0.00	0.00	0.00	0.00	0.00	0.00	0.00	XXX
87528		X	Hsv, dna, dir probe	0.00	0.00	0.00	0.00	0.00	0.00	0.00	0.00	0.00	0.00	XXX
87529		X	Hsv, dna, amp probe	0.00	0.00	0.00	0.00	0.00	0.00	0.00	0.00	0.00	0.00	XXX
87530		X	Hsv, dna, quant	0.00	0.00	0.00	0.00	0.00	0.00	0.00	0.00	0.00	0.00	XXX
87531		X	Hhv-6, dna, dir probe	0.00	0.00	0.00	0.00	0.00	0.00	0.00	0.00	0.00	0.00	XXX
87532		X	Hhv-6, dna, amp probe	0.00	0.00	0.00	0.00	0.00	0.00	0.00	0.00	0.00	0.00	XXX
87533		X	Hhv-6, dna, quant	0.00	0.00	0.00	0.00	0.00	0.00	0.00	0.00	0.00	0.00	XXX
87534		X	Hiv-1, dna, dir probe	0.00	0.00	0.00	0.00	0.00	0.00	0.00	0.00	0.00	0.00	XXX
87535		X	Hiv-1, dna, amp probe	0.00	0.00	0.00	0.00	0.00	0.00	0.00	0.00	0.00	0.00	XXX
87536		X	Hiv-1, dna, quant	0.00	0.00	0.00	0.00	0.00	0.00	0.00	0.00	0.00	0.00	XXX
87537		X	Hiv-2, dna, dir probe	0.00	0.00	0.00	0.00	0.00	0.00	0.00	0.00	0.00	0.00	XXX
87538		X	Hiv-2, dna, amp probe	0.00	0.00	0.00	0.00	0.00	0.00	0.00	0.00	0.00	0.00	XXX
87539		X	Hiv-2, dna, quant	0.00	0.00	0.00	0.00	0.00	0.00	0.00	0.00	0.00	0.00	XXX
87540		X	Legion pneumo, dna, dir prob	0.00	0.00	0.00	0.00	0.00	0.00	0.00	0.00	0.00	0.00	XXX
87541		X	Legion pneumo, dna, amp prob	0.00	0.00	0.00	0.00	0.00	0.00	0.00	0.00	0.00	0.00	XXX
87542		X	Legion pneumo, dna, quant	0.00	0.00	0.00	0.00	0.00	0.00	0.00	0.00	0.00	0.00	XXX
87550		X	Mycobacteria, dna, dir probe	0.00	0.00	0.00	0.00	0.00	0.00	0.00	0.00	0.00	0.00	XXX
87551		X	Mycobacteria, dna, amp probe	0.00	0.00	0.00	0.00	0.00	0.00	0.00	0.00	0.00	0.00	XXX
87552		X	Mycobacteria, dna, quant	0.00	0.00	0.00	0.00	0.00	0.00	0.00	0.00	0.00	0.00	XXX
87555		X	M.tuberculo, dna, dir probe	0.00	0.00	0.00	0.00	0.00	0.00	0.00	0.00	0.00	0.00	XXX
87556		X	M.tuberculo, dna, amp probe	0.00	0.00	0.00	0.00	0.00	0.00	0.00	0.00	0.00	0.00	XXX
87557		X	M.tuberculo, dna, quant	0.00	0.00	0.00	0.00	0.00	0.00	0.00	0.00	0.00	0.00	XXX
87560		X	M.avium-intra, dna, dir prob	0.00	0.00	0.00	0.00	0.00	0.00	0.00	0.00	0.00	0.00	XXX
87561		X	M.avium-intra, dna, amp prob	0.00	0.00	0.00	0.00	0.00	0.00	0.00	0.00	0.00	0.00	XXX
87562		X	M.avium-intra, dna, quant	0.00	0.00	0.00	0.00	0.00	0.00	0.00	0.00	0.00	0.00	XXX
87580		X	M.pneumon, dna, dir probe	0.00	0.00	0.00	0.00	0.00	0.00	0.00	0.00	0.00	0.00	XXX
87581		X	M.pneumon, dna, amp probe	0.00	0.00	0.00	0.00	0.00	0.00	0.00	0.00	0.00	0.00	XXX
87582		X	M.pneumon, dna, quant	0.00	0.00	0.00	0.00	0.00	0.00	0.00	0.00	0.00	0.00	XXX
87590		X	N.gonorrhoeae, dna, dir prob	0.00	0.00	0.00	0.00	0.00	0.00	0.00	0.00	0.00	0.00	XXX
87591		X	N.gonorrhoeae, dna, amp prob	0.00	0.00	0.00	0.00	0.00	0.00	0.00	0.00	0.00	0.00	XXX
87592		X	N.gonorrhoeae, dna, quant	0.00	0.00	0.00	0.00	0.00	0.00	0.00	0.00	0.00	0.00	XXX
87620		X	Hpv, dna, dir probe	0.00	0.00	0.00	0.00	0.00	0.00	0.00	0.00	0.00	0.00	XXX
87621		X	Hpv, dna, amp probe	0.00	0.00	0.00	0.00	0.00	0.00	0.00	0.00	0.00	0.00	XXX
87622		X	Hpv, dna, quant	0.00	0.00	0.00	0.00	0.00	0.00	0.00	0.00	0.00	0.00	XXX
87650		X	Strep a, dna, dir probe	0.00	0.00	0.00	0.00	0.00	0.00	0.00	0.00	0.00	0.00	XXX
87651		X	Strep a, dna, amp probe	0.00	0.00	0.00	0.00	0.00	0.00	0.00	0.00	0.00	0.00	XXX
87652		X	Strep a, dna, quant	0.00	0.00	0.00	0.00	0.00	0.00	0.00	0.00	0.00	0.00	XXX
87797		X	Detect agent nos, dna, dir	0.00	0.00	0.00	0.00	0.00	0.00	0.00	0.00	0.00	0.00	XXX
87798		X	Detect agent nos, dna, amp	0.00	0.00	0.00	0.00	0.00	0.00	0.00	0.00	0.00	0.00	XXX
87799		X	Detect agent nos, dna, quant	0.00	0.00	0.00	0.00	0.00	0.00	0.00	0.00	0.00	0.00	XXX
87800		X	Detect agnt mult, dna, direc	0.00	0.00	0.00	0.00	0.00	0.00	0.00	0.00	0.00	0.00	XXX
87801		X	Detect agnt mult, dna, ampli	0.00	0.00	0.00	0.00	0.00	0.00	0.00	0.00	0.00	0.00	XXX
87810		X	Chylmd trach assay w/optic	0.00	0.00	0.00	0.00	0.00	0.00	0.00	0.00	0.00	0.00	XXX
87850		X	N. gonorrhoeae assay w/optic	0.00	0.00	0.00	0.00	0.00	0.00	0.00	0.00	0.00	0.00	XXX

[1] CPT codes and descriptions only are copyright 2000 American Medical Association. All Rights Reserved. Applicable FARS/DFARS Apply.
[2] Copyright 1994 American Dental Association. All rights reserved.
[3] + Indicates RVUs are not used for Medicare payment.
[4] PE RVUs = Practice Expense Relative Value Units.

ADDENDUM B.—RELATIVE VALUE UNITS (RVU'S) AND RELATED INFORMATION—Continued

CPT[1]/ HCPCS[2]	MOD	Status	Description	Physician Work RVUs[3]	Fully Implemented Non-Facility PE RVUs	Year 2001 Transitional Non-Facility PE RVUs	Fully Implemented Facility PE RVUs	Year 2001 Transitional Facility PE RVUs	Mal-Practice RVUs	Fully Implemented Non-Facility Total	Year 2001 Transitional Non-Facility Total	Fully Implemented Facility Total	Year 2001 Transitional Facility Total	Global
87880		X	Strep a assay w/optic	0.00	0.00	0.00	0.00	0.00	0.00	0.00	0.00	0.00	0.00	XXX
87899		X	Agent nos assay w/optic	0.00	0.00	0.00	0.00	0.00	0.00	0.00	0.00	0.00	0.00	XXX
87901		X	Genotype, dna, hiv reverse t	0.00	0.00	0.00	0.00	0.00	0.00	0.00	0.00	0.00	0.00	XXX
87903		X	Phenotype, dna hiv w/culture	0.00	0.00	0.00	0.00	0.00	0.00	0.00	0.00	0.00	0.00	XXX
87904		X	Phenotype, dna hiv w/clt add	0.00	0.00	0.00	0.00	0.00	0.00	0.00	0.00	0.00	0.00	XXX
87999		X	Microbiology procedure	0.00	0.00	0.00	0.00	0.00	0.00	0.00	0.00	0.00	0.00	XXX
88000		N	Autopsy (necropsy), gross	0.00	0.00	0.00	0.00	0.00	0.00	0.00	0.00	0.00	0.00	XXX
88005		N	Autopsy (necropsy), gross	0.00	0.00	0.00	0.00	0.00	0.00	0.00	0.00	0.00	0.00	XXX
88007		N	Autopsy (necropsy), gross	0.00	0.00	0.00	0.00	0.00	0.00	0.00	0.00	0.00	0.00	XXX
88012		N	Autopsy (necropsy), gross	0.00	0.00	0.00	0.00	0.00	0.00	0.00	0.00	0.00	0.00	XXX
88014		N	Autopsy (necropsy), gross	0.00	0.00	0.00	0.00	0.00	0.00	0.00	0.00	0.00	0.00	XXX
88016		N	Autopsy (necropsy), gross	0.00	0.00	0.00	0.00	0.00	0.00	0.00	0.00	0.00	0.00	XXX
88020		N	Autopsy (necropsy), complete	0.00	0.00	0.00	0.00	0.00	0.00	0.00	0.00	0.00	0.00	XXX
88025		N	Autopsy (necropsy), complete	0.00	0.00	0.00	0.00	0.00	0.00	0.00	0.00	0.00	0.00	XXX
88027		N	Autopsy (necropsy), complete	0.00	0.00	0.00	0.00	0.00	0.00	0.00	0.00	0.00	0.00	XXX
88028		N	Autopsy (necropsy), complete	0.00	0.00	0.00	0.00	0.00	0.00	0.00	0.00	0.00	0.00	XXX
88029		N	Autopsy (necropsy), complete	0.00	0.00	0.00	0.00	0.00	0.00	0.00	0.00	0.00	0.00	XXX
88036		N	Limited autopsy	0.00	0.00	0.00	0.00	0.00	0.00	0.00	0.00	0.00	0.00	XXX
88037		N	Limited autopsy	0.00	0.00	0.00	0.00	0.00	0.00	0.00	0.00	0.00	0.00	XXX
88040		N	Forensic autopsy (necropsy)	0.00	0.00	0.00	0.00	0.00	0.00	0.00	0.00	0.00	0.00	XXX
88045		N	Coroner's autopsy (necropsy)	0.00	0.00	0.00	0.00	0.00	0.00	0.00	0.00	0.00	0.00	XXX
88099		N	Necropsy (autopsy) procedure	0.00	0.00	0.00	0.00	0.00	0.00	0.00	0.00	0.00	0.00	XXX
88104		A	Cytopathology, fluids	0.56	0.79	0.71	0.79	0.71	0.04	1.39	1.31	1.39	1.31	XXX
88104	26	A	Cytopathology, fluids	0.56	0.24	0.24	0.24	0.24	0.02	0.82	0.82	0.82	0.82	XXX
88104	TC	A	Cytopathology, fluids	0.00	0.55	0.47	NA	NA	0.02	0.57	0.49	NA	NA	XXX
88106		A	Cytopathology, fluids	0.56	0.54	0.51	0.54	0.51	0.04	1.14	1.11	1.14	1.11	XXX
88106	26	A	Cytopathology, fluids	0.56	0.24	0.24	0.24	0.24	0.02	0.82	0.82	0.82	0.82	XXX
88106	TC	A	Cytopathology, fluids	0.00	0.30	0.27	NA	NA	0.02	0.32	0.29	NA	NA	XXX
88107		A	Cytopathology, fluids	0.76	0.87	0.78	0.87	0.78	0.05	1.68	1.59	1.68	1.59	XXX
88107	26	A	Cytopathology, fluids	0.76	0.33	0.31	0.33	0.31	0.03	1.12	1.10	1.12	1.10	XXX
88107	TC	A	Cytopathology, fluids	0.00	0.54	0.47	NA	NA	0.02	0.56	0.49	NA	NA	XXX
88108		A	Cytopath, concentrate tech	0.56	0.70	0.66	0.70	0.66	0.04	1.30	1.26	1.30	1.26	XXX
88108	26	A	Cytopath, concentrate tech	0.56	0.24	0.25	0.24	0.25	0.02	0.82	0.83	0.82	0.83	XXX
88108	TC	A	Cytopath, concentrate tech	0.00	0.46	0.41	NA	NA	0.02	0.48	0.43	NA	NA	XXX
88125		A	Forensic cytopathology	0.26	0.32	0.27	0.32	0.27	0.02	0.60	0.55	0.60	0.55	XXX
88125	26	A	Forensic cytopathology	0.26	0.11	0.10	0.11	0.10	0.01	0.38	0.37	0.38	0.37	XXX
88125	TC	A	Forensic cytopathology	0.00	0.21	0.17	NA	NA	0.01	0.22	0.18	NA	NA	XXX
88130		X	Sex chromatin identification	0.00	0.00	0.00	0.00	0.00	0.00	0.00	0.00	0.00	0.00	XXX
88140		X	Sex chromatin identification	0.00	0.00	0.00	0.00	0.00	0.00	0.00	0.00	0.00	0.00	XXX
88141		A	Cytopath, c/v, interpret	0.42	0.18	0.22	0.18	0.22	0.01	0.61	0.65	0.61	0.65	XXX
88142		X	Cytopath, c/v, thin layer	0.00	0.00	0.00	0.00	0.00	0.00	0.00	0.00	0.00	0.00	XXX
88143		X	Cytopath c/v thin layer redo	0.00	0.00	0.00	0.00	0.00	0.00	0.00	0.00	0.00	0.00	XXX
88144		X	Cytopath, c/v thin lyr redo	0.00	0.00	0.00	0.00	0.00	0.00	0.00	0.00	0.00	0.00	XXX
88145		X	Cytopath, c/v thin lyr sel	0.00	0.00	0.00	0.00	0.00	0.00	0.00	0.00	0.00	0.00	XXX
88147		X	Cytopath, c/v, automated	0.00	0.00	0.00	0.00	0.00	0.00	0.00	0.00	0.00	0.00	XXX
88148		X	Cytopath, c/v, auto rescreen	0.00	0.00	0.00	0.00	0.00	0.00	0.00	0.00	0.00	0.00	XXX
88150		X	Cytopath, c/v, manual	0.00	0.00	0.00	0.00	0.00	0.00	0.00	0.00	0.00	0.00	XXX
88152		X	Cytopath, c/v, auto redo	0.00	0.00	0.00	0.00	0.00	0.00	0.00	0.00	0.00	0.00	XXX
88153		X	Cytopath, c/v, redo	0.00	0.00	0.00	0.00	0.00	0.00	0.00	0.00	0.00	0.00	XXX
88154		X	Cytopath, c/v, select	0.00	0.00	0.00	0.00	0.00	0.00	0.00	0.00	0.00	0.00	XXX
88155		X	Cytopath, c/v, index add-on	0.00	0.00	0.00	0.00	0.00	0.00	0.00	0.00	0.00	0.00	XXX
88160		A	Cytopath smear, other source	0.50	0.98	0.82	0.98	0.82	0.04	1.52	1.36	1.52	1.36	XXX
88160	26	A	Cytopath smear, other source	0.50	0.22	0.21	0.22	0.21	0.02	0.74	0.73	0.74	0.73	XXX
88160	TC	A	Cytopath smear, other source	0.00	0.76	0.61	NA	NA	0.02	0.78	0.63	NA	NA	XXX
88161		A	Cytopath smear, other source	0.50	0.97	0.83	0.97	0.83	0.04	1.51	1.37	1.51	1.37	XXX
88161	26	A	Cytopath smear, other source	0.50	0.21	0.21	0.21	0.21	0.02	0.73	0.73	0.73	0.73	XXX
88161	TC	A	Cytopath smear, other source	0.00	0.76	0.62	NA	NA	0.02	0.78	0.64	NA	NA	XXX
88162		A	Cytopath smear, other source	0.76	0.84	0.85	0.84	0.85	0.05	1.65	1.66	1.65	1.66	XXX
88162	26	A	Cytopath smear, other source	0.76	0.33	0.36	0.33	0.36	0.03	1.12	1.15	1.12	1.15	XXX
88162	TC	A	Cytopath smear, other source	0.00	0.51	0.49	NA	NA	0.02	0.53	0.51	NA	NA	XXX
88164		X	Cytopath tbs, c/v, manual	0.00	0.00	0.00	0.00	0.00	0.00	0.00	0.00	0.00	0.00	XXX
88165		X	Cytopath tbs, c/v, redo	0.00	0.00	0.00	0.00	0.00	0.00	0.00	0.00	0.00	0.00	XXX
88166		X	Cytopath tbs, c/v, auto redo	0.00	0.00	0.00	0.00	0.00	0.00	0.00	0.00	0.00	0.00	XXX
88167		X	Cytopath tbs, c/v, select	0.00	0.00	0.00	0.00	0.00	0.00	0.00	0.00	0.00	0.00	XXX
88170		A	Fine needle aspiration	1.27	0.86	0.92	0.86	0.92	0.10	2.23	2.29	2.23	2.29	XXX
88170	26	A	Fine needle aspiration	1.27	0.53	0.54	0.53	0.54	0.07	1.87	1.88	1.87	1.88	XXX
88170	TC	A	Fine needle aspiration	0.00	0.33	0.38	NA	NA	0.03	0.36	0.41	NA	NA	XXX
88171		A	Fine needle aspiration	1.27	0.72	0.91	0.72	0.91	0.08	2.07	2.26	2.07	2.26	XXX
88171	26	A	Fine needle aspiration	1.27	0.49	0.56	0.49	0.56	0.05	1.81	1.88	1.81	1.88	XXX
88171	TC	A	Fine needle aspiration	0.00	0.23	0.35	NA	NA	0.03	0.26	0.38	NA	NA	XXX
88172		A	Cytopathology eval of fna	0.60	1.09	1.01	1.09	1.01	0.04	1.73	1.65	1.73	1.65	XXX
88172	26	A	Cytopathology eval of fna	0.60	0.26	0.29	0.26	0.29	0.02	0.88	0.91	0.88	0.91	XXX
88172	TC	A	Cytopathology eval of fna	0.00	0.83	0.72	NA	NA	0.02	0.85	0.74	NA	NA	XXX
88173		A	Cytopath eval, fna, report	1.39	1.31	1.22	1.31	1.22	0.07	2.77	2.68	2.77	2.68	XXX
88173	26	A	Cytopath eval, fna, report	1.39	0.60	0.57	0.60	0.57	0.05	2.04	2.01	2.04	2.01	XXX
88173	TC	A	Cytopath eval, fna, report	0.00	0.71	0.65	NA	NA	0.02	0.73	0.67	NA	NA	XXX
88180		A	Cell marker study	0.36	0.65	0.58	0.65	0.58	0.03	1.04	0.97	1.04	0.97	XXX
88180	26	A	Cell marker study	0.36	0.15	0.16	0.15	0.16	0.01	0.52	0.53	0.52	0.53	XXX
88180	TC	A	Cell marker study	0.00	0.50	0.42	NA	NA	0.02	0.52	0.44	NA	NA	XXX
88182		A	Cell marker study	0.77	1.69	1.51	1.69	1.51	0.06	2.52	2.34	2.52	2.34	XXX
88182	26	A	Cell marker study	0.77	0.33	0.37	0.33	0.37	0.03	1.13	1.17	1.13	1.17	XXX
88182	TC	A	Cell marker study	0.00	1.36	1.14	NA	NA	0.03	1.39	1.17	NA	NA	XXX
88199		C	Cytopathology procedure	0.00	0.00	0.00	0.00	0.00	0.00	0.00	0.00	0.00	0.00	XXX

[1] CPT codes and descriptions only are copyright 2000 American Medical Association. All Rights Reserved. Applicable FARS/DFARS Apply.
[2] Copyright 1994 American Dental Association. All rights reserved.
[3] + Indicates RVUs are not used for Medicare payment.
[4] PE RVUs = Practice Expense Relative Value Units.

ADDENDUM B.—RELATIVE VALUE UNITS (RVU'S) AND RELATED INFORMATION—Continued

CPT[1]/ HCPCS[2]	MOD	Status	Description	Physician Work RVUs[3]	Fully Implemented Non-Facility PE RVUs	Year 2001 Transitional Non-Facility PE RVUs	Fully Implemented Facility PE RVUs	Year 2001 Transitional Facility PE RVUs	Mal-Practice RVUs	Fully Implemented Non-Facility Total	Year 2001 Transitional Non-Facility Total	Fully Implemented Facility Total	Year 2001 Transitional Facility Total	Global
88199	26	C	Cytopathology procedure	0.00	0.00	0.00	0.00	0.00	0.00	0.00	0.00	0.00	0.00	XXX
88199	TC	C	Cytopathology procedure	0.00	0.00	0.00	0.00	0.00	0.00	0.00	0.00	0.00	0.00	XXX
88230		X	Tissue culture, lymphocyte	0.00	0.00	0.00	0.00	0.00	0.00	0.00	0.00	0.00	0.00	XXX
88233		X	Tissue culture, skin/biopsy	0.00	0.00	0.00	0.00	0.00	0.00	0.00	0.00	0.00	0.00	XXX
88235		X	Tissue culture, placenta	0.00	0.00	0.00	0.00	0.00	0.00	0.00	0.00	0.00	0.00	XXX
88237		X	Tissue culture, bone marrow	0.00	0.00	0.00	0.00	0.00	0.00	0.00	0.00	0.00	0.00	XXX
88239		X	Tissue culture, tumor	0.00	0.00	0.00	0.00	0.00	0.00	0.00	0.00	0.00	0.00	XXX
88240		X	Cell cryopreserve/storage	0.00	0.00	0.00	0.00	0.00	0.00	0.00	0.00	0.00	0.00	XXX
88241		X	Frozen cell preparation	0.00	0.00	0.00	0.00	0.00	0.00	0.00	0.00	0.00	0.00	XXX
88245		X	Chromosome analysis, 20-25	0.00	0.00	0.00	0.00	0.00	0.00	0.00	0.00	0.00	0.00	XXX
88248		X	Chromosome analysis, 50-100	0.00	0.00	0.00	0.00	0.00	0.00	0.00	0.00	0.00	0.00	XXX
88249		X	Chromosome analysis, 100	0.00	0.00	0.00	0.00	0.00	0.00	0.00	0.00	0.00	0.00	XXX
88261		X	Chromosome analysis, 5	0.00	0.00	0.00	0.00	0.00	0.00	0.00	0.00	0.00	0.00	XXX
88262		X	Chromosome analysis, 15-20	0.00	0.00	0.00	0.00	0.00	0.00	0.00	0.00	0.00	0.00	XXX
88263		X	Chromosome analysis, 45	0.00	0.00	0.00	0.00	0.00	0.00	0.00	0.00	0.00	0.00	XXX
88264		X	Chromosome analysis, 20-25	0.00	0.00	0.00	0.00	0.00	0.00	0.00	0.00	0.00	0.00	XXX
88267		X	Chromosome analys, placenta	0.00	0.00	0.00	0.00	0.00	0.00	0.00	0.00	0.00	0.00	XXX
88269		X	Chromosome analys, amniotic	0.00	0.00	0.00	0.00	0.00	0.00	0.00	0.00	0.00	0.00	XXX
88271		X	Cytogenetics, dna probe	0.00	0.00	0.00	0.00	0.00	0.00	0.00	0.00	0.00	0.00	XXX
88272		X	Cytogenetics, 3-5	0.00	0.00	0.00	0.00	0.00	0.00	0.00	0.00	0.00	0.00	XXX
88273		X	Cytogenetics, 10-30	0.00	0.00	0.00	0.00	0.00	0.00	0.00	0.00	0.00	0.00	XXX
88274		X	Cytogenetics, 25-99	0.00	0.00	0.00	0.00	0.00	0.00	0.00	0.00	0.00	0.00	XXX
88275		X	Cytogenetics, 100-300	0.00	0.00	0.00	0.00	0.00	0.00	0.00	0.00	0.00	0.00	XXX
88280		X	Chromosome karyotype study	0.00	0.00	0.00	0.00	0.00	0.00	0.00	0.00	0.00	0.00	XXX
88283		X	Chromosome banding study	0.00	0.00	0.00	0.00	0.00	0.00	0.00	0.00	0.00	0.00	XXX
88285		X	Chromosome count, additional	0.00	0.00	0.00	0.00	0.00	0.00	0.00	0.00	0.00	0.00	XXX
88289		X	Chromosome study, additional	0.00	0.00	0.00	0.00	0.00	0.00	0.00	0.00	0.00	0.00	XXX
88291		A	Cyto/molecular report	0.52	0.22	0.22	0.22	0.22	0.02	0.76	0.76	0.76	0.76	XXX
88299		C	Cytogenetic study	0.00	0.00	0.00	0.00	0.00	0.00	0.00	0.00	0.00	0.00	XXX
88300		A	Surgical path, gross	0.08	0.42	0.37	0.42	0.37	0.02	0.52	0.47	0.52	0.47	XXX
88300	26	A	Surgical path, gross	0.08	0.03	0.05	0.03	0.05	0.01	0.12	0.14	0.12	0.14	XXX
88300	TC	A	Surgical path, gross	0.00	0.39	0.32	NA	NA	0.01	0.40	0.33	NA	NA	XXX
88302		A	Tissue exam by pathologist	0.13	1.11	0.94	1.11	0.94	0.03	1.27	1.10	1.27	1.10	XXX
88302	26	A	Tissue exam by pathologist	0.13	0.06	0.09	0.06	0.09	0.01	0.20	0.23	0.20	0.23	XXX
88302	TC	A	Tissue exam by pathologist	0.00	1.05	0.85	NA	NA	0.02	1.07	0.87	NA	NA	XXX
88304		A	Tissue exam by pathologist	0.22	0.89	0.82	0.89	0.82	0.03	1.14	1.07	1.14	1.07	XXX
88304	26	A	Tissue exam by pathologist	0.22	0.10	0.14	0.10	0.14	0.01	0.33	0.37	0.33	0.37	XXX
88304	TC	A	Tissue exam by pathologist	0.00	0.79	0.68	NA	NA	0.02	0.81	0.70	NA	NA	XXX
88305		A	Tissue exam by pathologist	0.75	1.64	1.51	1.64	1.51	0.05	2.44	2.31	2.44	2.31	XXX
88305	26	A	Tissue exam by pathologist	0.75	0.33	0.39	0.33	0.39	0.02	1.10	1.16	1.10	1.16	XXX
88305	TC	A	Tissue exam by pathologist	0.00	1.31	1.12	NA	NA	0.03	1.34	1.15	NA	NA	XXX
88307		A	Tissue exam by pathologist	1.59	2.45	2.25	2.45	2.25	0.11	4.15	3.95	4.15	3.95	XXX
88307	26	A	Tissue exam by pathologist	1.59	0.69	0.73	0.69	0.73	0.06	2.34	2.38	2.34	2.38	XXX
88307	TC	A	Tissue exam by pathologist	0.00	1.76	1.52	NA	NA	0.05	1.81	1.57	NA	NA	XXX
88309		A	Tissue exam by pathologist	2.28	3.46	3.12	3.46	3.12	0.13	5.87	5.53	5.87	5.53	XXX
88309	26	A	Tissue exam by pathologist	2.28	0.99	1.01	0.99	1.01	0.08	3.35	3.37	3.35	3.37	XXX
88309	TC	A	Tissue exam by pathologist	0.00	2.47	2.11	NA	NA	0.05	2.52	2.16	NA	NA	XXX
88311		A	Decalcify tissue	0.24	0.18	0.20	0.18	0.20	0.02	0.44	0.46	0.44	0.46	XXX
88311	26	A	Decalcify tissue	0.24	0.10	0.11	0.10	0.11	0.01	0.35	0.36	0.35	0.36	XXX
88311	TC	A	Decalcify tissue	0.00	0.08	0.09	NA	NA	0.01	0.09	0.10	NA	NA	XXX
88312		A	Special stains	0.54	1.59	1.26	1.59	1.26	0.03	2.16	1.83	2.16	1.83	XXX
88312	26	A	Special stains	0.54	0.23	0.21	0.23	0.21	0.02	0.79	0.77	0.79	0.77	XXX
88312	TC	A	Special stains	0.00	1.36	1.05	NA	NA	0.01	1.37	1.06	NA	NA	XXX
88313		A	Special stains	0.24	1.10	0.89	1.10	0.89	0.02	1.36	1.15	1.36	1.15	XXX
88313	26	A	Special stains	0.24	0.10	0.11	0.10	0.11	0.01	0.35	0.36	0.35	0.36	XXX
88313	TC	A	Special stains	0.00	1.00	0.78	NA	NA	0.01	1.01	0.79	NA	NA	XXX
88314		A	Histochemical stain	0.45	1.04	0.95	1.04	0.95	0.04	1.53	1.44	1.53	1.44	XXX
88314	26	A	Histochemical stain	0.45	0.19	0.24	0.19	0.24	0.02	0.66	0.71	0.66	0.71	XXX
88314	TC	A	Histochemical stain	0.00	0.85	0.71	NA	NA	0.02	0.87	0.73	NA	NA	XXX
88318		A	Chemical histochemistry	0.42	1.72	1.36	1.72	1.36	0.02	2.16	1.80	2.16	1.80	XXX
88318	26	A	Chemical histochemistry	0.42	0.18	0.17	0.18	0.17	0.01	0.61	0.60	0.61	0.60	XXX
88318	TC	A	Chemical histochemistry	0.00	1.54	1.19	NA	NA	0.01	1.55	1.20	NA	NA	XXX
88319		A	Enzyme histochemistry	0.53	1.68	1.39	1.68	1.39	0.04	2.25	1.96	2.25	1.96	XXX
88319	26	A	Enzyme histochemistry	0.53	0.23	0.24	0.23	0.24	0.02	0.78	0.79	0.78	0.79	XXX
88319	TC	A	Enzyme histochemistry	0.00	1.45	1.15	NA	NA	0.02	1.47	1.17	NA	NA	XXX
88321		A	Microslide consultation	1.30	0.61	0.57	0.56	0.53	0.04	1.95	1.91	1.90	1.87	XXX
88323		A	Microslide consultation	1.35	2.19	1.84	2.19	1.84	0.07	3.61	3.26	3.61	3.26	XXX
88323	26	A	Microslide consultation	1.35	0.59	0.55	0.59	0.55	0.05	1.99	1.95	1.99	1.95	XXX
88323	TC	A	Microslide consultation	0.00	1.60	1.29	NA	NA	0.02	1.62	1.31	NA	NA	XXX
88325		A	Comprehensive review of data	2.22	0.94	0.83	0.94	0.83	0.08	3.24	3.13	3.24	3.13	XXX
88329		A	Path consult introp	0.67	0.39	0.39	0.29	0.32	0.02	1.08	1.08	0.98	1.01	XXX
88331		A	Path consult intraop, 1 bloc	1.19	0.81	0.91	0.81	0.91	0.07	2.07	2.17	2.07	2.17	XXX
88331	26	A	Path consult intraop, 1 bloc	1.19	0.52	0.54	0.52	0.54	0.04	1.75	1.77	1.75	1.77	XXX
88331	TC	A	Path consult intraop, 1 bloc	0.00	0.29	0.37	NA	NA	0.03	0.32	0.40	NA	NA	XXX
88332		A	Path consult intraop, addl	0.59	0.44	0.48	0.44	0.48	0.04	1.07	1.11	1.07	1.11	XXX
88332	26	A	Path consult intraop, addl	0.59	0.26	0.27	0.26	0.27	0.02	0.87	0.88	0.87	0.88	XXX
88332	TC	A	Path consult intraop, addl	0.00	0.18	0.21	NA	NA	0.02	0.20	0.23	NA	NA	XXX
88342		A	Immunocytochemistry	0.85	1.31	1.16	1.31	1.16	0.05	2.21	2.06	2.21	2.06	XXX
88342	26	A	Immunocytochemistry	0.85	0.37	0.37	0.37	0.37	0.03	1.25	1.25	1.25	1.25	XXX
88342	TC	A	Immunocytochemistry	0.00	0.94	0.79	NA	NA	0.02	0.96	0.81	NA	NA	XXX
88346		A	Immunofluorescent study	0.86	1.31	1.14	1.31	1.14	0.05	2.22	2.05	2.22	2.05	XXX
88346	26	A	Immunofluorescent study	0.86	0.37	0.36	0.37	0.36	0.03	1.26	1.25	1.26	1.25	XXX
88346	TC	A	Immunofluorescent study	0.00	0.94	0.78	NA	NA	0.02	0.96	0.80	NA	NA	XXX

[1] CPT codes and descriptions only are copyright 2000 American Medical Association. All Rights Reserved. Applicable FARS/DFARS Apply.
[2] Copyright 1994 American Dental Association. All rights reserved.
[3] + Indicates RVUs are not used for Medicare payment.
[4] PE RVUs = Practice Expense Relative Value Units.

ADDENDUM B.—RELATIVE VALUE UNITS (RVU'S) AND RELATED INFORMATION—Continued

CPT[1]/ HCPCS[2]	MOD	Status	Description	Physician Work RVUs[3]	Fully Implemented Non-Facility PE RVUs	Year 2001 Transitional Non-Facility PE RVUs	Fully Implemented Facility PE RVUs	Year 2001 Transitional Facility PE RVUs	Mal-Practice RVUs	Fully Implemented Non-Facility Total	Year 2001 Transitional Non-Facility Total	Fully Implemented Facility Total	Year 2001 Transitional Facility Total	Global
88347		A	Immunofluorescent study	0.86	1.82	1.48	1.82	1.48	0.05	2.73	2.39	2.73	2.39	XXX
88347	26	A	Immunofluorescent study	0.86	0.37	0.32	0.37	0.32	0.03	1.26	1.21	1.26	1.21	XXX
88347	TC	A	Immunofluorescent study	0.00	1.45	1.16	NA	NA	0.02	1.47	1.18	NA	NA	XXX
88348		A	Electron microscopy	1.51	6.22	5.28	6.22	5.28	0.11	7.84	6.90	7.84	6.90	XXX
88348	26	A	Electron microscopy	1.51	0.65	0.81	0.65	0.81	0.05	2.21	2.37	2.21	2.37	XXX
88348	TC	A	Electron microscopy	0.00	5.57	4.47	NA	NA	0.06	5.63	4.53	NA	NA	XXX
88349		A	Scanning electron microscopy	0.76	7.77	6.25	7.77	6.25	0.08	8.61	7.09	8.61	7.09	XXX
88349	26	A	Scanning electron microscopy	0.76	0.33	0.46	0.33	0.46	0.03	1.12	1.25	1.12	1.25	XXX
88349	TC	A	Scanning electron microscopy	0.00	7.44	5.79	NA	NA	0.05	7.49	5.84	NA	NA	XXX
88355		A	Analysis, skeletal muscle	1.85	3.92	3.41	3.92	3.41	0.12	5.89	5.38	5.89	5.38	XXX
88355	26	A	Analysis, skeletal muscle	1.85	0.80	0.85	0.80	0.85	0.07	2.72	2.77	2.72	2.77	XXX
88355	TC	A	Analysis, skeletal muscle	0.00	3.12	2.56	NA	NA	0.05	3.17	2.61	NA	NA	XXX
88356		A	Analysis, nerve	3.02	4.42	4.04	4.42	4.04	0.16	7.60	7.22	7.60	7.22	XXX
88356	26	A	Analysis, nerve	3.02	1.30	1.35	1.30	1.35	0.10	4.42	4.47	4.42	4.47	XXX
88356	TC	A	Analysis, nerve	0.00	3.12	2.69	NA	NA	0.06	3.18	2.75	NA	NA	XXX
88358		A	Analysis, tumor	2.82	1.67	1.88	1.67	1.88	0.16	4.65	4.86	4.65	4.86	XXX
88358	26	A	Analysis, tumor	2.82	1.22	1.23	1.22	1.23	0.10	4.14	4.15	4.14	4.15	XXX
88358	TC	A	Analysis, tumor	0.00	0.45	0.65	NA	NA	0.06	0.51	0.71	NA	NA	XXX
88362		A	Nerve teasing preparations	2.17	2.71	2.57	2.71	2.57	0.12	5.00	4.86	5.00	4.86	XXX
88362	26	A	Nerve teasing preparations	2.17	0.93	0.97	0.93	0.97	0.07	3.17	3.21	3.17	3.21	XXX
88362	TC	A	Nerve teasing preparations	0.00	1.78	1.60	NA	NA	0.05	1.83	1.65	NA	NA	XXX
88365		A	Tissue hybridization	0.93	1.60	1.41	1.60	1.41	0.05	2.58	2.39	2.58	2.39	XXX
88365	26	A	Tissue hybridization	0.93	0.39	0.40	0.39	0.40	0.03	1.35	1.36	1.35	1.36	XXX
88365	TC	A	Tissue hybridization	0.00	1.21	1.01	NA	NA	0.02	1.23	1.03	NA	NA	XXX
88371		X	Protein, western blot tissue	0.00	0.00	0.00	0.00	0.00	0.00	0.00	0.00	0.00	0.00	XXX
88371	26	A	Protein, western blot tissue	0.37	0.14	0.16	0.14	0.16	0.01	0.52	0.54	0.52	0.54	XXX
88372		X	Protein analysis w/probe	0.00	0.00	0.00	0.00	0.00	0.00	0.00	0.00	0.00	0.00	XXX
88372	26	A	Protein analysis w/probe	0.37	0.15	0.17	0.15	0.17	0.01	0.53	0.55	0.53	0.55	XXX
88399		C	Surgical pathology procedure	0.00	0.00	0.00	0.00	0.00	0.00	0.00	0.00	0.00	0.00	XXX
88399	26	C	Surgical pathology procedure	0.00	0.00	0.00	0.00	0.00	0.00	0.00	0.00	0.00	0.00	XXX
88399	TC	C	Surgical pathology procedure	0.00	0.00	0.00	0.00	0.00	0.00	0.00	0.00	0.00	0.00	XXX
88400		X	Bilirubin total transcut	0.00	0.00	0.00	0.00	0.00	0.00	0.00	0.00	0.00	0.00	XXX
89050		X	Body fluid cell count	0.00	0.00	0.00	0.00	0.00	0.00	0.00	0.00	0.00	0.00	XXX
89051		X	Body fluid cell count	0.00	0.00	0.00	0.00	0.00	0.00	0.00	0.00	0.00	0.00	XXX
89060		X	Exam,synovial fluid crystals	0.00	0.00	0.00	0.00	0.00	0.00	0.00	0.00	0.00	0.00	XXX
89060	26	A	Exam,synovial fluid crystals	0.37	0.17	0.18	0.16	0.18	0.01	0.55	0.56	0.54	0.56	XXX
89100		A	Sample intestinal contents	0.60	1.88	1.53	0.22	0.28	0.02	2.50	2.15	0.84	0.90	XXX
89105		A	Sample intestinal contents	0.50	2.16	1.73	0.18	0.24	0.02	2.68	2.25	0.70	0.76	XXX
89125		X	Specimen fat stain	0.00	0.00	0.00	0.00	0.00	0.00	0.00	0.00	0.00	0.00	XXX
89130		A	Sample stomach contents	0.45	1.72	1.40	0.12	0.20	0.02	2.19	1.87	0.59	0.67	XXX
89132		A	Sample stomach contents	0.19	1.79	1.40	0.08	0.11	0.01	1.99	1.60	0.28	0.31	XXX
89135		A	Sample stomach contents	0.79	1.83	1.53	0.28	0.37	0.03	2.65	2.35	1.10	1.19	XXX
89136		A	Sample stomach contents	0.21	1.38	1.10	0.08	0.12	0.01	1.60	1.32	0.30	0.34	XXX
89140		A	Sample stomach contents	0.94	2.20	1.87	0.27	0.42	0.03	3.17	2.84	1.24	1.39	XXX
89141		A	Sample stomach contents	0.85	2.67	2.20	0.34	0.45	0.03	3.55	3.08	1.22	1.33	XXX
89160		X	Exam feces for meat fibers	0.00	0.00	0.00	0.00	0.00	0.00	0.00	0.00	0.00	0.00	XXX
89190		X	Nasal smear for eosinophils	0.00	0.00	0.00	0.00	0.00	0.00	0.00	0.00	0.00	0.00	XXX
89250		X	Fertilization of oocyte	0.00	0.00	0.00	0.00	0.00	0.00	0.00	0.00	0.00	0.00	XXX
89251		X	Culture oocyte w/embryos	0.00	0.00	0.00	0.00	0.00	0.00	0.00	0.00	0.00	0.00	XXX
89252		X	Assist oocyte fertilization	0.00	0.00	0.00	0.00	0.00	0.00	0.00	0.00	0.00	0.00	XXX
89253		X	Embryo hatching	0.00	0.00	0.00	0.00	0.00	0.00	0.00	0.00	0.00	0.00	XXX
89254		X	Oocyte identification	0.00	0.00	0.00	0.00	0.00	0.00	0.00	0.00	0.00	0.00	XXX
89255		X	Prepare embryo for transfer	0.00	0.00	0.00	0.00	0.00	0.00	0.00	0.00	0.00	0.00	XXX
89256		X	Prepare cryopreserved embryo	0.00	0.00	0.00	0.00	0.00	0.00	0.00	0.00	0.00	0.00	XXX
89257		X	Sperm identification	0.00	0.00	0.00	0.00	0.00	0.00	0.00	0.00	0.00	0.00	XXX
89258		X	Cryopreservation, embryo	0.00	0.00	0.00	0.00	0.00	0.00	0.00	0.00	0.00	0.00	XXX
89259		X	Cryopreservation, sperm	0.00	0.00	0.00	0.00	0.00	0.00	0.00	0.00	0.00	0.00	XXX
89260		X	Sperm isolation, simple	0.00	0.00	0.00	0.00	0.00	0.00	0.00	0.00	0.00	0.00	XXX
89261		X	Sperm isolation, complex	0.00	0.00	0.00	0.00	0.00	0.00	0.00	0.00	0.00	0.00	XXX
89264		X	Identify sperm tissue	0.00	0.00	0.00	0.00	0.00	0.00	0.00	0.00	0.00	0.00	XXX
89300		X	Semen analysis	0.00	0.00	0.00	0.00	0.00	0.00	0.00	0.00	0.00	0.00	XXX
89310		X	Semen analysis	0.00	0.00	0.00	0.00	0.00	0.00	0.00	0.00	0.00	0.00	XXX
89320		X	Semen analysis	0.00	0.00	0.00	0.00	0.00	0.00	0.00	0.00	0.00	0.00	XXX
89321		X	Semen analysis	0.00	0.00	0.00	0.00	0.00	0.00	0.00	0.00	0.00	0.00	XXX
89325		X	Sperm antibody test	0.00	0.00	0.00	0.00	0.00	0.00	0.00	0.00	0.00	0.00	XXX
89329		X	Sperm evaluation test	0.00	0.00	0.00	0.00	0.00	0.00	0.00	0.00	0.00	0.00	XXX
89330		X	Evaluation, cervical mucus	0.00	0.00	0.00	0.00	0.00	0.00	0.00	0.00	0.00	0.00	XXX
89350		A	Sputum specimen collection	0.00	0.40	0.41	NA	NA	0.02	0.42	0.43	NA	NA	XXX
89355		X	Exam feces for starch	0.00	0.00	0.00	0.00	0.00	0.00	0.00	0.00	0.00	0.00	XXX
89360		A	Collect sweat for test	0.00	0.45	0.46	NA	NA	0.02	0.47	0.48	NA	NA	XXX
89365		X	Water load test	0.00	0.00	0.00	0.00	0.00	0.00	0.00	0.00	0.00	0.00	XXX
89399		C	Pathology lab procedure	0.00	0.00	0.00	0.00	0.00	0.00	0.00	0.00	0.00	0.00	XXX
89399	26	C	Pathology lab procedure	0.00	0.00	0.00	0.00	0.00	0.00	0.00	0.00	0.00	0.00	XXX
89399	TC	C	Pathology lab procedure	0.00	0.00	0.00	0.00	0.00	0.00	0.00	0.00	0.00	0.00	XXX
90281		I	Human ig, im	0.00	0.00	0.00	0.00	0.00	0.00	0.00	0.00	0.00	0.00	XXX
90283		I	Human ig, iv	0.00	0.00	0.00	0.00	0.00	0.00	0.00	0.00	0.00	0.00	XXX
90287		I	Botulinum antitoxin	0.00	0.00	0.00	0.00	0.00	0.00	0.00	0.00	0.00	0.00	XXX
90288		I	Botulism ig, iv	0.00	0.00	0.00	0.00	0.00	0.00	0.00	0.00	0.00	0.00	XXX
90291		I	Cmv ig, iv	0.00	0.00	0.00	0.00	0.00	0.00	0.00	0.00	0.00	0.00	XXX
90296		E	Diphtheria antitoxin	0.00	0.00	0.00	0.00	0.00	0.00	0.00	0.00	0.00	0.00	XXX
90371		E	Hep b ig, im	0.00	0.00	0.00	0.00	0.00	0.00	0.00	0.00	0.00	0.00	XXX
90375		E	Rabies ig, im/sc	0.00	0.00	0.00	0.00	0.00	0.00	0.00	0.00	0.00	0.00	XXX
90376		E	Rabies ig, heat treated	0.00	0.00	0.00	0.00	0.00	0.00	0.00	0.00	0.00	0.00	XXX

[1] CPT codes and descriptions only are copyright 2000 American Medical Association. All Rights Reserved. Applicable FARS/DFARS Apply.
[2] Copyright 1994 American Dental Association. All rights reserved.
[3] + Indicates RVUs are not used for Medicare payment.
[4] PE RVUs = Practice Expense Relative Value Units.

ADDENDUM B.—RELATIVE VALUE UNITS (RVU'S) AND RELATED INFORMATION—Continued

CPT[1]/ HCPCS[2]	MOD	Status	Description	Physician Work RVUs[3]	Fully Implemented Non-Facility PE RVUs	Year 2001 Transitional Non-Facility PE RVUs	Fully Implemented Facility PE RVUs	Year 2001 Transitional Facility PE RVUs	Mal-Practice RVUs	Fully Implemented Non-Facility Total	Year 2001 Transitional Non-Facility Total	Fully Implemented Facility Total	Year 2001 Transitional Facility Total	Global
90378		X	Rsv ig, im, 50mg	0.00	0.00	0.00	0.00	0.00	0.00	0.00	0.00	0.00	0.00	XXX
90379		E	Rsv ig, iv	0.00	0.00	0.00	0.00	0.00	0.00	0.00	0.00	0.00	0.00	XXX
90384		I	Rh ig, full-dose, im	0.00	0.00	0.00	0.00	0.00	0.00	0.00	0.00	0.00	0.00	XXX
90385		E	Rh ig, minidose, im	0.00	0.00	0.00	0.00	0.00	0.00	0.00	0.00	0.00	0.00	XXX
90386		I	Rh ig, iv	0.00	0.00	0.00	0.00	0.00	0.00	0.00	0.00	0.00	0.00	XXX
90389		E	Tetanus ig, im	0.00	0.00	0.00	0.00	0.00	0.00	0.00	0.00	0.00	0.00	XXX
90393		E	Vaccina ig, im	0.00	0.00	0.00	0.00	0.00	0.00	0.00	0.00	0.00	0.00	XXX
90396		E	Varicella-zoster ig, im	0.00	0.00	0.00	0.00	0.00	0.00	0.00	0.00	0.00	0.00	XXX
90399		I	Immune globulin	0.00	0.00	0.00	0.00	0.00	0.00	0.00	0.00	0.00	0.00	XXX
90471		N	Immunization admin	0.00	0.00	0.00	0.00	0.00	0.01	0.01	0.01	0.01	0.01	XXX
90472		N	Immunization admin, each add	0.00	0.00	0.00	0.00	0.00	0.01	0.01	0.01	0.01	0.01	XXX
90476		E	Adenovirus vaccine, type 4	0.00	0.00	0.00	0.00	0.00	0.00	0.00	0.00	0.00	0.00	XXX
90477		E	Adenovirus vaccine, type 7	0.00	0.00	0.00	0.00	0.00	0.00	0.00	0.00	0.00	0.00	XXX
90581		E	Anthrax vaccine, sc	0.00	0.00	0.00	0.00	0.00	0.00	0.00	0.00	0.00	0.00	XXX
90585		E	Bcg vaccine, percut	0.00	0.00	0.00	0.00	0.00	0.00	0.00	0.00	0.00	0.00	XXX
90586		E	Bcg vaccine, intravesical	0.00	0.00	0.00	0.00	0.00	0.00	0.00	0.00	0.00	0.00	XXX
90632		E	Hep a vaccine, adult im	0.00	0.00	0.00	0.00	0.00	0.00	0.00	0.00	0.00	0.00	XXX
90633		E	Hep a vacc, ped/adol, 2 dose	0.00	0.00	0.00	0.00	0.00	0.00	0.00	0.00	0.00	0.00	XXX
90634		E	Hep a vacc, ped/adol, 3 dose	0.00	0.00	0.00	0.00	0.00	0.00	0.00	0.00	0.00	0.00	XXX
90636		E	Hep a/hep b vacc, adult im	0.00	0.00	0.00	0.00	0.00	0.00	0.00	0.00	0.00	0.00	XXX
90645		E	Hib vaccine, hboc, im	0.00	0.00	0.00	0.00	0.00	0.00	0.00	0.00	0.00	0.00	XXX
90646		E	Hib vaccine, prp-d, im	0.00	0.00	0.00	0.00	0.00	0.00	0.00	0.00	0.00	0.00	XXX
90647		E	Hib vaccine, prp-omp, im	0.00	0.00	0.00	0.00	0.00	0.00	0.00	0.00	0.00	0.00	XXX
90648		E	Hib vaccine, prp-t, im	0.00	0.00	0.00	0.00	0.00	0.00	0.00	0.00	0.00	0.00	XXX
90657		X	Flu vaccine, 6-35 mo, im	0.00	0.00	0.00	0.00	0.00	0.00	0.00	0.00	0.00	0.00	XXX
90658		X	Flu vaccine, 3 yrs, im	0.00	0.00	0.00	0.00	0.00	0.00	0.00	0.00	0.00	0.00	XXX
90659		X	Flu vaccine, whole, im	0.00	0.00	0.00	0.00	0.00	0.00	0.00	0.00	0.00	0.00	XXX
90660		X	Flu vaccine, nasal	0.00	0.00	0.00	0.00	0.00	0.00	0.00	0.00	0.00	0.00	XXX
90665		E	Lyme disease vaccine, im	0.00	0.00	0.00	0.00	0.00	0.00	0.00	0.00	0.00	0.00	XXX
90669		N	Pneumococcal vacc, ped<5	0.00	0.00	0.00	0.00	0.00	0.00	0.00	0.00	0.00	0.00	XXX
90675		E	Rabies vaccine, im	0.00	0.00	0.00	0.00	0.00	0.00	0.00	0.00	0.00	0.00	XXX
90676		E	Rabies vaccine, id	0.00	0.00	0.00	0.00	0.00	0.00	0.00	0.00	0.00	0.00	XXX
90680		E	Rotovirus vaccine, oral	0.00	0.00	0.00	0.00	0.00	0.00	0.00	0.00	0.00	0.00	XXX
90690		E	Typhoid vaccine, oral	0.00	0.00	0.00	0.00	0.00	0.00	0.00	0.00	0.00	0.00	XXX
90691		E	Typhoid vaccine, im	0.00	0.00	0.00	0.00	0.00	0.00	0.00	0.00	0.00	0.00	XXX
90692		E	Typhoid vaccine, h-p, sc/id	0.00	0.00	0.00	0.00	0.00	0.00	0.00	0.00	0.00	0.00	XXX
90693		E	Typhoid vaccine, akd, sc	0.00	0.00	0.00	0.00	0.00	0.00	0.00	0.00	0.00	0.00	XXX
90700		E	Dtap vaccine, im	0.00	0.00	0.00	0.00	0.00	0.00	0.00	0.00	0.00	0.00	XXX
90701		E	Dtp vaccine, im	0.00	0.00	0.00	0.00	0.00	0.00	0.00	0.00	0.00	0.00	XXX
90702		E	Dt vaccine < 7, im	0.00	0.00	0.00	0.00	0.00	0.00	0.00	0.00	0.00	0.00	XXX
90703		E	Tetanus vaccine, im	0.00	0.00	0.00	0.00	0.00	0.00	0.00	0.00	0.00	0.00	XXX
90704		E	Mumps vaccine, sc	0.00	0.00	0.00	0.00	0.00	0.00	0.00	0.00	0.00	0.00	XXX
90705		E	Measles vaccine, sc	0.00	0.00	0.00	0.00	0.00	0.00	0.00	0.00	0.00	0.00	XXX
90706		E	Rubella vaccine, sc	0.00	0.00	0.00	0.00	0.00	0.00	0.00	0.00	0.00	0.00	XXX
90707		E	Mmr vaccine, sc	0.00	0.00	0.00	0.00	0.00	0.00	0.00	0.00	0.00	0.00	XXX
90708		E	Measles-rubella vaccine, sc	0.00	0.00	0.00	0.00	0.00	0.00	0.00	0.00	0.00	0.00	XXX
90709		E	Rubella & mumps vaccine, sc	0.00	0.00	0.00	0.00	0.00	0.00	0.00	0.00	0.00	0.00	XXX
90710		E	Mmrv vaccine, sc	0.00	0.00	0.00	0.00	0.00	0.00	0.00	0.00	0.00	0.00	XXX
90712		E	Oral poliovirus vaccine	0.00	0.00	0.00	0.00	0.00	0.00	0.00	0.00	0.00	0.00	XXX
90713		E	Poliovirus, ipv, sc	0.00	0.00	0.00	0.00	0.00	0.00	0.00	0.00	0.00	0.00	XXX
90716		E	Chicken pox vaccine, sc	0.00	0.00	0.00	0.00	0.00	0.00	0.00	0.00	0.00	0.00	XXX
90717		E	Yellow fever vaccine, sc	0.00	0.00	0.00	0.00	0.00	0.00	0.00	0.00	0.00	0.00	XXX
90718		E	Td vaccine > 7, im	0.00	0.00	0.00	0.00	0.00	0.00	0.00	0.00	0.00	0.00	XXX
90719		E	Diphtheria vaccine, im	0.00	0.00	0.00	0.00	0.00	0.00	0.00	0.00	0.00	0.00	XXX
90720		E	Dtp/hib vaccine, im	0.00	0.00	0.00	0.00	0.00	0.00	0.00	0.00	0.00	0.00	XXX
90721		E	Dtap/hib vaccine, im	0.00	0.00	0.00	0.00	0.00	0.00	0.00	0.00	0.00	0.00	XXX
90723		X	Dtap-hep b-ipv vaccine, im	0.00	0.00	0.00	0.00	0.00	0.00	0.00	0.00	0.00	0.00	XXX
90725		E	Cholera vaccine, injectable	0.00	0.00	0.00	0.00	0.00	0.00	0.00	0.00	0.00	0.00	XXX
90727		E	Plague vaccine, im	0.00	0.00	0.00	0.00	0.00	0.00	0.00	0.00	0.00	0.00	XXX
90732		X	Pneumococcal vacc, adult/ill	0.00	0.00	0.00	0.00	0.00	0.00	0.00	0.00	0.00	0.00	XXX
90733		E	Meningococcal vaccine, sc	0.00	0.00	0.00	0.00	0.00	0.00	0.00	0.00	0.00	0.00	XXX
90735		E	Encephalitis vaccine, sc	0.00	0.00	0.00	0.00	0.00	0.00	0.00	0.00	0.00	0.00	XXX
90740		X	Hepb vacc, ill pat 3 dose im	0.00	0.00	0.00	0.00	0.00	0.00	0.00	0.00	0.00	0.00	XXX
90743		X	Hep b vacc, adol, 2 dose, im	0.00	0.00	0.00	0.00	0.00	0.00	0.00	0.00	0.00	0.00	XXX
90744		X	Hepb vacc ped/adol 3 dose im	0.00	0.00	0.00	0.00	0.00	0.00	0.00	0.00	0.00	0.00	XXX
90746		X	Hep b vaccine, adult, im	0.00	0.00	0.00	0.00	0.00	0.00	0.00	0.00	0.00	0.00	XXX
90747		X	Hepb vacc, ill pat 4 dose im	0.00	0.00	0.00	0.00	0.00	0.00	0.00	0.00	0.00	0.00	XXX
90748		E	Hep b/hib vaccine, im	0.00	0.00	0.00	0.00	0.00	0.00	0.00	0.00	0.00	0.00	XXX
90749		E	Vaccine toxoid	0.00	0.00	0.00	0.00	0.00	0.00	0.00	0.00	0.00	0.00	XXX
90780		A	IV infusion therapy, 1 hour	0.00	1.10	1.11	1.10	1.11	0.06	1.16	1.17	1.16	1.17	XXX
90781		A	IV infusion, additional hour	0.00	0.56	0.57	0.56	0.57	0.03	0.59	0.60	0.59	0.60	ZZZ
90782		T	Injection, sc/im	0.00	0.11	0.11	0.11	0.11	0.01	0.12	0.12	0.12	0.12	XXX
90783		T	Injection, ia	0.00	0.40	0.41	0.40	0.41	0.02	0.42	0.43	0.42	0.43	XXX
90784		T	Injection, iv	0.00	0.47	0.48	0.47	0.48	0.03	0.50	0.51	0.50	0.51	XXX
90788		T	Injection of antibiotic	0.00	0.12	0.12	0.12	0.12	0.01	0.13	0.13	0.13	0.13	XXX
90799		C	Ther/prophylactic/dx inject	0.00	0.00	0.00	0.00	0.00	0.00	0.00	0.00	0.00	0.00	XXX
90801		A	Psy dx interview	2.80	1.16	1.05	0.93	0.88	0.06	4.02	3.91	3.79	3.74	XXX
90802		A	Intac psy dx interview	3.01	1.17	0.98	0.99	0.85	0.07	4.25	4.06	4.07	3.93	XXX
90804		A	Psytx, office, 20-30 min	1.21	0.54	0.50	0.40	0.40	0.03	1.78	1.74	1.64	1.64	XXX
90805		A	Psytx, off, 20-30 min w/e&m	1.37	0.60	0.55	0.44	0.43	0.03	2.00	1.95	1.84	1.83	XXX
90806		A	Psytx, off, 45-50 min	1.86	0.77	0.73	0.62	0.61	0.04	2.67	2.63	2.52	2.51	XXX
90807		A	Psytx, off, 45-50 min w/e&m	2.02	0.80	0.75	0.66	0.64	0.05	2.87	2.82	2.73	2.71	XXX
90808		A	Psytx, office, 75-80 min	2.79	1.09	1.10	0.93	0.98	0.07	3.95	3.96	3.79	3.84	XXX

[1] CPT codes and descriptions only are copyright 2000 American Medical Association. All Rights Reserved. Applicable FARS/DFARS Apply.
[2] Copyright 1994 American Dental Association. All rights reserved.
[3] + Indicates RVUs are not used for Medicare payment.
[4] PE RVUs = Practice Expense Relative Value Units.

ADDENDUM B.—RELATIVE VALUE UNITS (RVU'S) AND RELATED INFORMATION—Continued

CPT[1]/ HCPCS[2]	MOD	Status	Description	Physician Work RVUs[3]	Fully Implemented Non-Facility PE RVUs	Year 2001 Transitional Non-Facility PE RVUs	Fully Implemented Facility PE RVUs	Year 2001 Transitional Facility PE RVUs	Mal-Practice RVUs	Fully Implemented Non-Facility Total	Year 2001 Transitional Non-Facility Total	Fully Implemented Facility Total	Year 2001 Transitional Facility Total	Global
90809		A	Psytx, off, 75-80, w/e&m	2.95	1.13	1.13	0.96	1.01	0.07	4.15	4.15	3.98	4.03	XXX
90810		A	Intac psytx, off, 20-30 min	1.32	0.56	0.58	0.44	0.49	0.03	1.91	1.93	1.79	1.84	XXX
90811		A	Intac psytx, 20-30, w/e&m	1.48	0.64	0.64	0.48	0.52	0.03	2.15	2.15	1.99	2.03	XXX
90812		A	Intac psytx, off, 45-50 min	1.97	0.83	0.78	0.65	0.65	0.05	2.85	2.80	2.67	2.67	XXX
90813		A	Intac psytx, 45-50 min w/e&m	2.13	0.87	0.81	0.70	0.69	0.05	3.05	2.99	2.88	2.87	XXX
90814		A	Intac psytx, off, 75-80 min	2.90	1.20	1.06	1.14	1.02	0.07	4.17	4.03	4.11	3.99	XXX
90815		A	Intac psytx, 75-80 w/e&m	3.06	1.21	1.07	0.98	0.90	0.07	4.34	4.20	4.11	4.03	XXX
90816		A	Psytx, hosp, 20-30 min	1.25	0.58	0.53	0.43	0.42	0.03	1.86	1.81	1.71	1.70	XXX
90817		A	Psytx, hosp, 20-30 min w/e&m	1.41	0.63	0.57	0.46	0.44	0.03	2.07	2.01	1.90	1.88	XXX
90818		A	Psytx, hosp, 45-50 min	1.89	0.82	0.76	0.65	0.64	0.04	2.75	2.69	2.58	2.57	XXX
90819		A	Psytx, hosp, 45-50 min w/e&m	2.05	0.83	0.77	0.66	0.64	0.05	2.93	2.87	2.76	2.74	XXX
90821		A	Psytx, hosp, 75-80 min	2.83	1.14	1.14	0.97	1.01	0.06	4.03	4.03	3.86	3.90	XXX
90822		A	Psytx, hosp, 75-80 min w/e&m	2.99	1.13	1.13	0.97	1.01	0.07	4.19	4.19	4.03	4.07	XXX
90823		A	Intac psytx, hosp, 20-30 min	1.36	0.68	0.67	0.45	0.50	0.03	2.07	2.06	1.84	1.89	XXX
90824		A	Intac psytx, hsp 20-30 w/e&m	1.52	0.72	0.70	0.49	0.53	0.03	2.27	2.25	2.04	2.08	XXX
90826		A	Intac psytx, hosp, 45-50 min	2.01	0.91	0.84	0.69	0.68	0.04	2.96	2.89	2.74	2.73	XXX
90827		A	Intac psytx, hsp 45-50 w/e&m	2.16	0.94	0.87	0.69	0.68	0.05	3.15	3.08	2.90	2.89	XXX
90828		A	Intac psytx, hosp, 75-80 min	2.94	1.23	1.08	1.02	0.93	0.07	4.24	4.09	4.03	3.94	XXX
90829		A	Intac psytx, hsp 75-80 w/e&m	3.10	1.26	1.11	1.00	0.91	0.07	4.43	4.28	4.17	4.08	XXX
90845		A	Psychoanalysis	1.79	0.70	0.64	0.59	0.55	0.04	2.53	2.47	2.42	2.38	XXX
90846		R	Family psytx w/o patient	1.83	0.74	0.72	0.62	0.63	0.04	2.61	2.59	2.49	2.50	XXX
90847		R	Family psytx w/patient	2.21	0.87	0.81	0.75	0.72	0.05	3.13	3.07	3.01	2.98	XXX
90849		R	Multiple family group psytx	0.59	0.37	0.35	0.20	0.22	0.01	0.97	0.95	0.80	0.82	XXX
90853		A	Group psychotherapy	0.59	0.35	0.33	0.20	0.22	0.01	0.95	0.93	0.80	0.82	XXX
90857		A	Intac group psytx	0.63	0.38	0.33	0.23	0.21	0.02	1.03	0.98	0.88	0.86	XXX
90862		A	Medication management	0.95	0.44	0.43	0.31	0.33	0.02	1.41	1.40	1.28	1.30	XXX
90865		A	Narcosynthesis	2.84	1.63	1.36	0.93	0.83	0.07	4.54	4.27	3.84	3.74	XXX
90870		A	Electroconvulsive therapy	1.88	0.75	0.71	0.75	0.71	0.04	2.67	2.63	2.67	2.63	000
90871		A	Electroconvulsive therapy	2.72	NA	NA	1.03	1.00	0.06	NA	NA	3.81	3.78	000
90875		N	Psychophysiological therapy	+1.20	0.88	0.88	0.48	0.48	0.03	2.11	2.11	1.71	1.71	XXX
90876		N	Psychophysiological therapy	+1.90	1.16	1.16	0.76	0.76	0.04	3.10	3.10	2.70	2.70	XXX
90880		A	Hypnotherapy	2.19	0.89	0.84	0.71	0.71	0.05	3.13	3.08	2.95	2.95	XXX
90882		N	Environmental manipulation	0.00	0.00	0.00	0.00	0.00	0.00	0.00	0.00	0.00	0.00	XXX
90885		B	Psy evaluation of records	+0.97	0.39	0.38	0.39	0.38	0.02	1.38	1.37	1.38	1.37	XXX
90887		B	Consultation with family	+1.48	0.82	0.71	0.59	0.53	0.03	2.33	2.22	2.10	2.04	XXX
90889		B	Preparation of report	0.00	0.00	0.00	0.00	0.00	0.00	0.00	0.00	0.00	0.00	XXX
90899		C	Psychiatric service/therapy	0.00	0.00	0.00	0.00	0.00	0.00	0.00	0.00	0.00	0.00	XXX
90901		A	Biofeedback train, any meth	0.41	0.72	0.80	0.18	0.40	0.02	1.15	1.23	0.61	0.83	000
90911		A	Biofeedback peri/uro/rectal	0.89	0.87	0.96	0.37	0.59	0.04	1.80	1.89	1.30	1.52	000
90918		A	ESRD related services, month	11.18	5.30	4.57	5.30	4.57	0.30	16.78	16.05	16.78	16.05	XXX
90919		A	ESRD related services, month	8.54	4.32	3.84	4.32	3.84	0.24	13.10	12.62	13.10	12.62	XXX
90920		A	ESRD related services, month	7.27	3.77	3.42	3.77	3.42	0.19	11.23	10.88	11.23	10.88	XXX
90921		A	ESRD related services, month	4.47	2.70	2.62	2.70	2.62	0.12	7.29	7.21	7.29	7.21	XXX
90922		A	ESRD related services, day	0.37	0.16	0.14	0.16	0.14	0.01	0.54	0.52	0.54	0.52	XXX
90923		A	Esrd related services, day	0.28	0.14	0.13	0.14	0.13	0.01	0.43	0.42	0.43	0.42	XXX
90924		A	Esrd related services, day	0.24	0.12	0.11	0.12	0.11	0.01	0.37	0.36	0.37	0.36	XXX
90925		A	Esrd related services, day	0.15	0.09	0.09	0.09	0.09	0.01	0.25	0.25	0.25	0.25	XXX
90935		A	Hemodialysis, one evaluation	1.22	NA	NA	0.78	0.95	0.03	NA	NA	2.03	2.20	000
90937		A	Hemodialysis, repeated eval	2.11	NA	NA	1.10	1.46	0.06	NA	NA	3.27	3.63	000
90940		X	Hemodialysis access study	0.00	0.00	0.00	0.00	0.00	0.00	0.00	0.00	0.00	0.00	XXX
90945		A	Dialysis, one evaluation	1.28	NA	NA	0.81	0.95	0.04	NA	NA	2.13	2.27	000
90947		A	Dialysis, repeated eval	2.16	NA	NA	1.12	1.41	0.06	NA	NA	3.34	3.63	000
90989		X	Dialysis training, complete	0.00	0.00	0.00	0.00	0.00	0.00	0.00	0.00	0.00	0.00	XXX
90993		X	Dialysis training, incompl	0.00	0.00	0.00	0.00	0.00	0.00	0.00	0.00	0.00	0.00	XXX
90997		A	Hemoperfusion	1.84	NA	NA	1.01	1.31	0.05	NA	NA	2.90	3.20	000
90999		C	Dialysis procedure	0.00	0.00	0.00	0.00	0.00	0.00	0.00	0.00	0.00	0.00	XXX
91000		A	Esophageal intubation	0.73	0.35	0.44	0.35	0.44	0.04	1.12	1.21	1.12	1.21	000
91000	26	A	Esophageal intubation	0.73	0.27	0.36	0.27	0.36	0.03	1.03	1.12	1.03	1.12	000
91000	TC	A	Esophageal intubation	0.00	0.08	0.08	NA	NA	0.01	0.09	0.09	NA	NA	000
91010		A	Esophagus motility study	1.25	1.27	1.54	1.27	1.54	0.10	2.62	2.89	2.62	2.89	000
91010	26	A	Esophagus motility study	1.25	0.45	0.71	0.45	0.71	0.05	1.75	2.01	1.75	2.01	000
91010	TC	A	Esophagus motility study	0.00	0.82	0.83	NA	NA	0.05	0.87	0.88	NA	NA	000
91011		A	Esophagus motility study	1.50	1.57	1.89	1.57	1.89	0.10	3.17	3.49	3.17	3.49	000
91011	26	A	Esophagus motility study	1.50	0.55	0.86	0.55	0.86	0.05	2.10	2.41	2.10	2.41	000
91011	TC	A	Esophagus motility study	0.00	1.02	1.03	NA	NA	0.05	1.07	1.08	NA	NA	000
91012		A	Esophagus motility study	1.46	1.67	1.99	1.67	1.99	0.12	3.25	3.57	3.25	3.57	000
91012	26	A	Esophagus motility study	1.46	0.53	0.84	0.53	0.84	0.06	2.05	2.36	2.05	2.36	000
91012	TC	A	Esophagus motility study	0.00	1.14	1.15	NA	NA	0.06	1.20	1.21	NA	NA	000
91020		A	Gastric motility	1.44	1.26	1.57	1.26	1.57	0.11	2.81	3.12	2.81	3.12	000
91020	26	A	Gastric motility	1.44	0.50	0.80	0.50	0.80	0.06	2.00	2.30	2.00	2.30	000
91020	TC	A	Gastric motility	0.00	0.76	0.77	NA	NA	0.05	0.81	0.82	NA	NA	000
91030		A	Acid perfusion of esophagus	0.91	0.55	0.56	0.55	0.56	0.05	1.51	1.52	1.51	1.52	000
91030	26	A	Acid perfusion of esophagus	0.91	0.33	0.34	0.33	0.34	0.03	1.27	1.28	1.27	1.28	000
91030	TC	A	Acid perfusion of esophagus	0.00	0.22	0.22	NA	NA	0.02	0.24	0.24	NA	NA	000
91032		A	Esophagus, acid reflux test	1.21	1.17	1.41	1.17	1.41	0.10	2.48	2.72	2.48	2.72	000
91032	26	A	Esophagus, acid reflux test	1.21	0.43	0.66	0.43	0.66	0.05	1.69	1.92	1.69	1.92	000
91032	TC	A	Esophagus, acid reflux test	0.00	0.74	0.75	NA	NA	0.05	0.79	0.80	NA	NA	000
91033		A	Prolonged acid reflux test	1.30	1.81	2.09	1.81	2.09	0.14	3.25	3.53	3.25	3.53	000
91033	26	A	Prolonged acid reflux test	1.30	0.47	0.74	0.47	0.74	0.05	1.82	2.09	1.82	2.09	000
91033	TC	A	Prolonged acid reflux test	0.00	1.34	1.35	NA	NA	0.09	1.43	1.44	NA	NA	000
91052		A	Gastric analysis test	0.79	0.62	0.69	0.62	0.69	0.05	1.46	1.53	1.46	1.53	000
91052	26	A	Gastric analysis test	0.79	0.28	0.35	0.28	0.35	0.03	1.10	1.17	1.10	1.17	000
91052	TC	A	Gastric analysis test	0.00	0.34	0.34	NA	NA	0.02	0.36	0.36	NA	NA	000

[1] CPT codes and descriptions only are copyright 2000 American Medical Association. All Rights Reserved. Applicable FARS/DFARS Apply.
[2] Copyright 1994 American Dental Association. All rights reserved.
[3] + Indicates RVUs are not used for Medicare payment.
[4] PE RVUs = Practice Expense Relative Value Units.

ADDENDUM B.—RELATIVE VALUE UNITS (RVU'S) AND RELATED INFORMATION—Continued

CPT[1]/ HCPCS[2]	MOD	Status	Description	Physician Work RVUs[3]	Fully Implemented Non-Facility PE RVUs	Year 2001 Transitional Non-Facility PE RVUs	Fully Implemented Facility PE RVUs	Year 2001 Transitional Facility PE RVUs	Mal-Practice RVUs	Fully Implemented Non-Facility Total	Year 2001 Transitional Non-Facility Total	Fully Implemented Facility Total	Year 2001 Transitional Facility Total	Global
91055	.....	A	Gastric intubation for smear	0.94	0.58	0.65	0.58	0.65	0.06	1.58	1.65	1.58	1.65	000
91055	26	A	Gastric intubation for smear	0.94	0.28	0.35	0.28	0.35	0.04	1.26	1.33	1.26	1.33	000
91055	TC	A	Gastric intubation for smear	0.00	0.30	0.30	NA	NA	0.02	0.32	0.32	NA	NA	000
91060	.....	A	Gastric saline load test	0.45	0.35	0.45	0.35	0.45	0.04	0.84	0.94	0.84	0.94	000
91060	26	A	Gastric saline load test	0.45	0.13	0.23	0.13	0.23	0.02	0.60	0.70	0.60	0.70	000
91060	TC	A	Gastric saline load test	0.00	0.22	0.22	NA	NA	0.02	0.24	0.24	NA	NA	000
91065	.....	A	Breath hydrogen test	0.20	0.43	0.47	0.43	0.47	0.03	0.66	0.70	0.66	0.70	000
91065	26	A	Breath hydrogen test	0.20	0.07	0.11	0.07	0.11	0.01	0.28	0.32	0.28	0.32	000
91065	TC	A	Breath hydrogen test	0.00	0.36	0.36	NA	NA	0.02	0.38	0.38	NA	NA	000
91100	.....	A	Pass intestine bleeding tube	1.08	NA	NA	0.46	0.50	0.06	NA	NA	1.60	1.64	000
91105	.....	A	Gastric intubation treatment	0.37	NA	NA	0.20	0.26	0.02	NA	NA	0.59	0.65	000
91122	.....	A	Anal pressure record	1.77	1.35	1.49	1.35	1.49	0.17	3.29	3.43	3.29	3.43	000
91122	26	A	Anal pressure record	1.77	0.65	0.78	0.65	0.78	0.10	2.52	2.65	2.52	2.65	000
91122	TC	A	Anal pressure record	0.00	0.70	0.71	NA	NA	0.07	0.77	0.78	NA	NA	000
91132	.....	C	Electrogastrography	0.00	0.00	0.00	0.00	0.00	0.00	0.00	0.00	0.00	0.00	XXX
91132	26	C	Electrogastrography	0.00	0.00	0.00	0.00	0.00	0.00	0.00	0.00	0.00	0.00	XXX
91132	TC	C	Electrogastrography	0.00	0.00	0.00	0.00	0.00	0.00	0.00	0.00	0.00	0.00	XXX
91133	.....	C	Electrogastrography w/test	0.00	0.00	0.00	0.00	0.00	0.00	0.00	0.00	0.00	0.00	XXX
91133	26	C	Electrogastrography w/test	0.00	0.00	0.00	0.00	0.00	0.00	0.00	0.00	0.00	0.00	XXX
91133	TC	C	Electrogastrography w/test	0.00	0.00	0.00	0.00	0.00	0.00	0.00	0.00	0.00	0.00	XXX
91299	.....	C	Gastroenterology procedure	0.00	0.00	0.00	0.00	0.00	0.00	0.00	0.00	0.00	0.00	XXX
91299	26	C	Gastroenterology procedure	0.00	0.00	0.00	0.00	0.00	0.00	0.00	0.00	0.00	0.00	XXX
91299	TC	C	Gastroenterology procedure	0.00	0.00	0.00	0.00	0.00	0.00	0.00	0.00	0.00	0.00	XXX
92002	.....	A	Eye exam, new patient	0.88	1.10	0.96	0.36	0.34	0.02	2.00	1.86	1.26	1.24	XXX
92004	.....	A	Eye exam, new patient	1.67	1.73	1.45	0.72	0.62	0.03	3.43	3.15	2.42	2.32	XXX
92012	.....	A	Eye exam established pat	0.67	1.05	0.91	0.31	0.29	0.01	1.73	1.59	0.99	0.97	XXX
92014	.....	A	Eye exam & treatment	1.10	1.36	1.17	0.51	0.46	0.02	2.48	2.29	1.63	1.58	XXX
92015	.....	N	Refraction	+0.38	1.40	1.14	0.15	0.20	0.01	1.79	1.53	0.54	0.59	XXX
92018	.....	A	New eye exam & treatment	1.51	NA	NA	0.72	0.67	0.03	NA	NA	2.26	2.21	XXX
92019	.....	A	Eye exam & treatment	1.31	NA	NA	0.62	0.53	0.03	NA	NA	1.96	1.87	XXX
92020	.....	A	Special eye evaluation	0.37	0.70	0.60	0.17	0.17	0.01	1.08	0.98	0.55	0.55	XXX
92060	.....	A	Special eye evaluation	0.69	1.53	1.25	1.53	1.25	0.02	2.24	1.96	2.24	1.96	XXX
92060	26	A	Special eye evaluation	0.69	0.30	0.28	0.30	0.28	0.01	1.00	0.98	1.00	0.98	XXX
92060	TC	A	Special eye evaluation	0.00	1.23	0.97	NA	NA	0.01	1.24	0.98	NA	NA	XXX
92065	.....	A	Orthoptic/pleoptic training	0.37	0.80	0.70	0.80	0.70	0.02	1.19	1.09	1.19	1.09	XXX
92065	26	A	Orthoptic/pleoptic training	0.37	0.16	0.18	0.16	0.18	0.01	0.54	0.56	0.54	0.56	XXX
92065	TC	A	Orthoptic/pleoptic training	0.00	0.64	0.52	NA	NA	0.01	0.65	0.53	NA	NA	XXX
92070	.....	A	Fitting of contact lens	0.70	1.03	1.10	0.34	0.42	0.01	1.74	1.81	1.05	1.13	XXX
92081	.....	A	Visual field examination(s)	0.36	1.42	1.16	1.42	1.16	0.02	1.80	1.54	1.80	1.54	XXX
92081	26	A	Visual field examination(s)	0.36	0.16	0.17	0.16	0.17	0.01	0.53	0.54	0.53	0.54	XXX
92081	TC	A	Visual field examination(s)	0.00	1.26	0.99	NA	NA	0.01	1.27	1.00	NA	NA	XXX
92082	.....	A	Visual field examination(s)	0.44	1.25	1.07	1.25	1.07	0.02	1.71	1.53	1.71	1.53	XXX
92082	26	A	Visual field examination(s)	0.44	0.20	0.23	0.20	0.23	0.01	0.65	0.68	0.65	0.68	XXX
92082	TC	A	Visual field examination(s)	0.00	1.05	0.84	NA	NA	0.01	1.06	0.85	NA	NA	XXX
92083	.....	A	Visual field examination(s)	0.50	1.23	1.15	1.23	1.15	0.02	1.75	1.67	1.75	1.67	XXX
92083	26	A	Visual field examination(s)	0.50	0.23	0.32	0.23	0.32	0.01	0.74	0.83	0.74	0.83	XXX
92083	TC	A	Visual field examination(s)	0.00	1.00	0.83	NA	NA	0.01	1.01	0.84	NA	NA	XXX
92100	.....	A	Serial tonometry exam(s)	0.92	0.79	0.66	0.40	0.34	0.02	1.73	1.60	1.34	1.28	XXX
92120	.....	A	Tonography & eye evaluation	0.81	0.77	0.66	0.32	0.28	0.02	1.60	1.49	1.15	1.11	XXX
92130	.....	A	Water provocation tonography	0.81	0.87	0.79	0.40	0.37	0.02	1.70	1.62	1.23	1.20	XXX
92135	.....	A	Opthalmic dx imaging	0.35	1.19	1.19	1.19	1.19	0.02	1.56	1.56	1.56	1.56	XXX
92135	26	A	Opthalmic dx imaging	0.35	0.16	0.16	0.16	0.16	0.01	0.52	0.52	0.52	0.52	XXX
92135	TC	A	Opthalmic dx imaging	0.00	1.03	1.03	NA	NA	0.01	1.04	1.04	NA	NA	XXX
92140	.....	A	Glaucoma provocative tests	0.50	0.95	0.80	0.22	0.21	0.01	1.46	1.31	0.73	0.72	XXX
92225	.....	A	Special eye exam, initial	0.38	1.64	1.35	0.16	0.18	0.01	2.03	1.74	0.55	0.57	XXX
92226	.....	A	Special eye exam, subsequent	0.33	1.73	1.41	0.15	0.17	0.01	2.07	1.75	0.49	0.51	XXX
92230	.....	A	Eye exam with photos	0.60	1.28	1.15	0.19	0.24	0.02	1.90	1.77	0.81	0.86	XXX
92235	.....	A	Eye exam with photos	0.81	2.31	2.16	2.31	2.16	0.07	3.19	3.04	3.19	3.04	XXX
92235	26	A	Eye exam with photos	0.81	0.40	0.46	0.40	0.46	0.02	1.23	1.29	1.23	1.29	XXX
92235	TC	A	Eye exam with photos	0.00	1.91	1.70	NA	NA	0.05	1.96	1.75	NA	NA	XXX
92240	.....	A	Icg angiography	1.10	2.75	2.49	2.75	2.49	0.07	3.92	3.66	3.92	3.66	XXX
92240	26	A	Icg angiography	1.10	0.53	0.56	0.53	0.56	0.02	1.65	1.68	1.65	1.68	XXX
92240	TC	A	Icg angiography	0.00	2.22	1.93	NA	NA	0.05	2.27	1.98	NA	NA	XXX
92250	.....	A	Eye exam with photos	0.44	1.75	1.43	1.75	1.43	0.02	2.21	1.89	2.21	1.89	XXX
92250	26	A	Eye exam with photos	0.44	0.21	0.23	0.21	0.23	0.01	0.66	0.68	0.66	0.68	XXX
92250	TC	A	Eye exam with photos	0.00	1.54	1.20	NA	NA	0.01	1.55	1.21	NA	NA	XXX
92260	.....	A	Ophthalmoscopy/dynamometry	0.20	0.22	0.31	0.10	0.15	0.01	0.43	0.52	0.31	0.36	XXX
92265	.....	A	Eye muscle evaluation	0.81	1.27	1.04	1.27	1.04	0.04	2.12	1.89	2.12	1.89	XXX
92265	26	A	Eye muscle evaluation	0.81	0.33	0.27	0.33	0.27	0.02	1.16	1.10	1.16	1.10	XXX
92265	TC	A	Eye muscle evaluation	0.00	0.94	0.77	NA	NA	0.02	0.96	0.79	NA	NA	XXX
92270	.....	A	Electro-oculography	0.81	1.03	0.95	1.03	0.95	0.05	1.89	1.81	1.89	1.81	XXX
92270	26	A	Electro-oculography	0.81	0.35	0.36	0.35	0.36	0.03	1.19	1.20	1.19	1.20	XXX
92270	TC	A	Electro-oculography	0.00	0.68	0.59	NA	NA	0.02	0.70	0.61	NA	NA	XXX
92275	.....	A	Electroretinography	1.01	1.17	1.13	1.17	1.13	0.04	2.22	2.18	2.22	2.18	XXX
92275	26	A	Electroretinography	1.01	0.45	0.48	0.45	0.48	0.02	1.48	1.51	1.48	1.51	XXX
92275	TC	A	Electroretinography	0.00	0.72	0.65	NA	NA	0.02	0.74	0.67	NA	NA	XXX
92283	.....	A	Color vision examination	0.17	0.65	0.57	0.65	0.57	0.02	0.84	0.76	0.84	0.76	XXX
92283	26	A	Color vision examination	0.17	0.07	0.10	0.07	0.10	0.01	0.25	0.28	0.25	0.28	XXX
92283	TC	A	Color vision examination	0.00	0.58	0.47	NA	NA	0.01	0.59	0.48	NA	NA	XXX
92284	.....	A	Dark adaptation eye exam	0.24	1.98	1.61	1.98	1.61	0.02	2.24	1.87	2.24	1.87	XXX
92284	26	A	Dark adaptation eye exam	0.24	0.08	0.14	0.08	0.14	0.01	0.33	0.39	0.33	0.39	XXX
92284	TC	A	Dark adaptation eye exam	0.00	1.90	1.47	NA	NA	0.01	1.91	1.48	NA	NA	XXX
92285	.....	A	Eye photography	0.20	1.90	1.51	1.90	1.51	0.02	2.12	1.73	2.12	1.73	XXX

[1] CPT codes and descriptions only are copyright 2000 American Medical Association. All Rights Reserved. Applicable FARS/DFARS Apply.
[2] Copyright 1994 American Dental Association. All rights reserved.
[3] + Indicates RVUs are not used for Medicare payment.
[4] PE RVUs = Practice Expense Relative Value Units.

ADDENDUM B.—RELATIVE VALUE UNITS (RVU'S) AND RELATED INFORMATION—Continued

CPT[1]/ HCPCS[2]	MOD	Status	Description	Physician Work RVUs[3]	Fully Implemented Non-Facility PE RVUs	Year 2001 Transitional Non-Facility PE RVUs	Fully Implemented Facility PE RVUs	Year 2001 Transitional Facility PE RVUs	Mal-Practice RVUs	Fully Implemented Non-Facility Total	Year 2001 Transitional Non-Facility Total	Fully Implemented Facility Total	Year 2001 Transitional Facility Total	Global
92285	26	A	Eye photography	0.20	0.09	0.12	0.09	0.12	0.01	0.30	0.33	0.30	0.33	XXX
92285	TC	A	Eye photography	0.00	1.81	1.39	NA	NA	0.01	1.82	1.40	NA	NA	XXX
92286		A	Internal eye photography	0.66	2.07	1.89	2.07	1.89	0.03	2.76	2.58	2.76	2.58	XXX
92286	26	A	Internal eye photography	0.66	0.32	0.47	0.32	0.47	0.01	0.99	1.14	0.99	1.14	XXX
92286	TC	A	Internal eye photography	0.00	1.75	1.42	NA	NA	0.02	1.77	1.44	NA	NA	XXX
92287		A	Internal eye photography	0.81	1.96	1.88	0.30	0.43	0.02	2.79	2.71	1.13	1.26	XXX
92310		N	Contact lens fitting	+1.17	1.08	1.16	0.47	0.70	0.00	2.25	2.33	1.64	1.87	XXX
92311		A	Contact lens fitting	1.08	1.05	1.03	0.40	0.42	0.03	2.16	2.14	1.51	1.53	XXX
92312		A	Contact lens fitting	1.26	1.03	1.09	0.46	0.50	0.03	2.32	2.38	1.75	1.79	XXX
92313		A	Contact lens fitting	0.92	1.06	1.04	0.32	0.36	0.02	2.00	1.98	1.26	1.30	XXX
92314		N	Prescription of contact lens	+0.69	0.88	0.87	0.28	0.42	0.00	1.57	1.56	0.97	1.11	XXX
92315		A	Prescription of contact lens	0.45	0.77	0.76	0.18	0.23	0.01	1.23	1.22	0.64	0.69	XXX
92316		A	Prescription of contact lens	0.68	0.85	0.90	0.27	0.33	0.01	1.54	1.59	0.96	1.02	XXX
92317		A	Prescription of contact lens	0.45	0.93	0.80	0.19	0.20	0.01	1.39	1.26	0.65	0.66	XXX
92325		A	Modification of contact lens	0.00	0.39	0.40	0.39	0.40	0.01	0.40	0.41	0.40	0.41	XXX
92326		A	Replacement of contact lens	0.00	1.62	1.64	1.62	1.64	0.05	1.67	1.69	1.67	1.69	XXX
92330		A	Fitting of artificial eye	1.08	1.02	1.07	0.41	0.46	0.04	2.14	2.19	1.53	1.58	XXX
92335		A	Fitting of artificial eye	0.45	0.83	1.16	0.18	0.40	0.01	1.29	1.62	0.64	0.86	XXX
92340		N	Fitting of spectacles	+0.37	0.66	0.61	0.15	0.22	0.00	1.03	0.98	0.52	0.59	XXX
92341		N	Fitting of spectacles	+0.47	0.69	0.66	0.19	0.28	0.00	1.16	1.13	0.66	0.75	XXX
92342		N	Fitting of spectacles	+0.53	0.72	0.70	0.21	0.32	0.00	1.25	1.23	0.74	0.85	XXX
92352		B	Special spectacles fitting	+0.37	0.66	0.58	0.15	0.20	0.01	1.04	0.96	0.53	0.58	XXX
92353		B	Special spectacles fitting	+0.50	0.71	0.64	0.20	0.26	0.02	1.23	1.16	0.72	0.78	XXX
92354		B	Special spectacles fitting	+0.00	8.79	8.88	8.79	8.88	0.08	8.87	8.96	8.87	8.96	XXX
92355		B	Special spectacles fitting	+0.00	4.30	4.35	4.30	4.35	0.01	4.31	4.36	4.31	4.36	XXX
92358		B	Eye prosthesis service	+0.00	0.96	0.97	0.96	0.97	0.04	1.00	1.01	1.00	1.01	XXX
92370		N	Repair & adjust spectacles	+0.32	0.50	0.47	0.13	0.19	0.00	0.82	0.79	0.45	0.51	XXX
92371		B	Repair & adjust spectacles	+0.00	0.61	0.62	0.61	0.62	0.02	0.63	0.64	0.63	0.64	XXX
92390		N	Supply of spectacles	0.00	0.00	0.00	0.00	0.00	0.00	0.00	0.00	0.00	0.00	XXX
92391		N	Supply of contact lenses	0.00	0.00	0.00	0.00	0.00	0.00	0.00	0.00	0.00	0.00	XXX
92392		I	Supply of low vision aids	+0.00	4.02	4.06	4.02	4.06	0.02	4.04	4.08	4.04	4.08	XXX
92393		I	Supply of artificial eye	+0.00	12.46	12.59	12.46	12.59	0.47	12.93	13.06	12.93	13.06	XXX
92395		I	Supply of spectacles	+0.00	1.36	1.38	1.36	1.38	0.08	1.44	1.46	1.44	1.46	XXX
92396		I	Supply of contact lenses	+0.00	2.29	2.31	2.29	2.31	0.06	2.35	2.37	2.35	2.37	XXX
92499		C	Eye service or procedure	0.00	0.00	0.00	0.00	0.00	0.00	0.00	0.00	0.00	0.00	XXX
92499	26	C	Eye service or procedure	0.00	0.00	0.00	0.00	0.00	0.00	0.00	0.00	0.00	0.00	XXX
92499	TC	C	Eye service or procedure	0.00	0.00	0.00	0.00	0.00	0.00	0.00	0.00	0.00	0.00	XXX
92502		A	Ear and throat examination	1.51	NA	NA	1.33	1.30	0.06	NA	NA	2.90	2.87	000
92504		A	Ear microscopy examination	0.18	1.04	0.85	0.09	0.10	0.01	1.23	1.04	0.28	0.29	XXX
92506		A	Speech/hearing evaluation	0.86	1.47	1.24	0.45	0.41	0.04	2.37	2.14	1.35	1.31	XXX
92507		A	Speech/hearing therapy	0.52	1.34	1.10	0.28	0.26	0.02	1.88	1.64	0.82	0.80	XXX
92508		A	Speech/hearing therapy	0.26	0.97	0.78	0.15	0.14	0.01	1.24	1.05	0.42	0.41	XXX
92510		A	Rehab for ear implant	1.50	1.94	1.83	0.85	0.82	0.06	3.50	3.39	2.41	2.38	XXX
92511		A	Nasopharyngoscopy	0.84	1.28	1.19	0.42	0.43	0.03	2.15	2.06	1.29	1.30	000
92512		A	Nasal function studies	0.55	1.09	0.95	0.20	0.22	0.02	1.66	1.52	0.77	0.79	XXX
92516		A	Facial nerve function test	0.43	0.91	0.79	0.23	0.23	0.02	1.36	1.24	0.68	0.68	XXX
92520		A	Laryngeal function studies	0.76	0.56	0.57	0.36	0.34	0.03	1.35	1.36	1.15	1.13	XXX
92525		N	Oral function evaluation	+1.50	1.55	1.44	0.60	0.59	0.07	3.12	3.01	2.17	2.16	XXX
92526		A	Oral function therapy	0.55	1.45	1.22	0.25	0.25	0.02	2.02	1.79	0.82	0.82	XXX
92531		B	Spontaneous nystagmus study	0.00	0.00	0.00	0.00	0.00	0.00	0.00	0.00	0.00	0.00	XXX
92532		B	Positional nystagmus study	0.00	0.00	0.00	0.00	0.00	0.00	0.00	0.00	0.00	0.00	XXX
92533		B	Caloric vestibular test	0.00	0.00	0.00	0.00	0.00	0.00	0.00	0.00	0.00	0.00	XXX
92534		B	Optokinetic nystagmus	0.00	0.00	0.00	0.00	0.00	0.00	0.00	0.00	0.00	0.00	XXX
92541		A	Spontaneous nystagmus test	0.40	0.43	0.50	0.43	0.50	0.04	0.87	0.94	0.87	0.94	XXX
92541	26	A	Spontaneous nystagmus test	0.40	0.20	0.27	0.20	0.27	0.02	0.62	0.69	0.62	0.69	XXX
92541	TC	A	Spontaneous nystagmus test	0.00	0.23	0.23	NA	NA	0.02	0.25	0.25	NA	NA	XXX
92542		A	Positional nystagmus test	0.33	0.42	0.48	0.42	0.48	0.03	0.78	0.84	0.78	0.84	XXX
92542	26	A	Positional nystagmus test	0.33	0.16	0.22	0.16	0.22	0.01	0.50	0.56	0.50	0.56	XXX
92542	TC	A	Positional nystagmus test	0.00	0.26	0.26	NA	NA	0.02	0.28	0.28	NA	NA	XXX
92543		A	Caloric vestibular test	0.10	0.16	0.18	0.16	0.18	0.02	0.28	0.30	0.28	0.30	XXX
92543	26	A	Caloric vestibular test	0.10	0.05	0.07	0.05	0.07	0.01	0.16	0.18	0.16	0.18	XXX
92543	TC	A	Caloric vestibular test	0.00	0.11	0.11	NA	NA	0.01	0.12	0.12	NA	NA	XXX
92544		A	Optokinetic nystagmus test	0.26	0.34	0.38	0.34	0.38	0.03	0.63	0.67	0.63	0.67	XXX
92544	26	A	Optokinetic nystagmus test	0.26	0.13	0.17	0.13	0.17	0.01	0.40	0.44	0.40	0.44	XXX
92544	TC	A	Optokinetic nystagmus test	0.00	0.21	0.21	NA	NA	0.02	0.23	0.23	NA	NA	XXX
92545		A	Oscillating tracking test	0.23	0.32	0.35	0.32	0.35	0.03	0.58	0.61	0.58	0.61	XXX
92545	26	A	Oscillating tracking test	0.23	0.11	0.14	0.11	0.14	0.01	0.35	0.38	0.35	0.38	XXX
92545	TC	A	Oscillating tracking test	0.00	0.21	0.21	NA	NA	0.02	0.23	0.23	NA	NA	XXX
92546		A	Sinusoidal rotational test	0.29	0.38	0.43	0.38	0.43	0.03	0.70	0.75	0.70	0.75	XXX
92546	26	A	Sinusoidal rotational test	0.29	0.14	0.19	0.14	0.19	0.01	0.44	0.49	0.44	0.49	XXX
92546	TC	A	Sinusoidal rotational test	0.00	0.24	0.24	NA	NA	0.02	0.26	0.26	NA	NA	XXX
92547		A	Supplemental electrical test	0.00	0.56	0.57	NA	NA	0.05	0.61	0.62	NA	NA	ZZZ
92548		A	Posturography	0.50	1.72	1.80	1.72	1.80	0.13	2.35	2.43	2.35	2.43	XXX
92548	26	A	Posturography	0.50	0.26	0.32	0.26	0.32	0.02	0.78	0.84	0.78	0.84	XXX
92548	TC	A	Posturography	0.00	1.46	1.48	NA	NA	0.11	1.57	1.59	NA	NA	XXX
92551		N	Pure tone hearing test, air	0.00	0.00	0.00	0.00	0.00	0.00	0.00	0.00	0.00	0.00	XXX
92552		A	Pure tone audiometry, air	0.00	0.44	0.45	NA	NA	0.03	0.47	0.48	NA	NA	XXX
92553		A	Audiometry, air & bone	0.00	0.65	0.66	NA	NA	0.05	0.70	0.71	NA	NA	XXX
92555		A	Speech threshold audiometry	0.00	0.37	0.38	NA	NA	0.03	0.40	0.41	NA	NA	XXX
92556		A	Speech audiometry, complete	0.00	0.57	0.58	NA	NA	0.05	0.62	0.63	NA	NA	XXX
92557		A	Comprehensive hearing test	0.00	1.18	1.19	NA	NA	0.10	1.28	1.29	NA	NA	XXX
92559		N	Group audiometric testing	0.00	0.00	0.00	0.00	0.00	0.00	0.00	0.00	0.00	0.00	XXX
92560		N	Bekesy audiometry, screen	0.00	0.00	0.00	0.00	0.00	0.00	0.00	0.00	0.00	0.00	XXX

[1] CPT codes and descriptions only are copyright 2000 American Medical Association. All Rights Reserved. Applicable FARS/DFARS Apply.
[2] Copyright 1994 American Dental Association. All rights reserved.
[3] + Indicates RVUs are not used for Medicare payment.
[4] PE RVUs = Practice Expense Relative Value Units.

ADDENDUM B.—RELATIVE VALUE UNITS (RVU'S) AND RELATED INFORMATION—Continued

CPT[1]/ HCPCS[2]	MOD	Status	Description	Physician Work RVUs[3]	Fully Implemented Non-Facility PE RVUs	Year 2001 Transitional Non-Facility PE RVUs	Fully Implemented Facility PE RVUs	Year 2001 Transitional Facility PE RVUs	Mal-Practice RVUs	Fully Implemented Non-Facility Total	Year 2001 Transitional Non-Facility Total	Fully Implemented Facility Total	Year 2001 Transitional Facility Total	Global
92561		A	Bekesy audiometry, diagnosis	0.00	0.71	0.72	NA	NA	0.05	0.76	0.77	NA	NA	XXX
92562		A	Loudness balance test	0.00	0.40	0.41	NA	NA	0.03	0.43	0.44	NA	NA	XXX
92563		A	Tone decay hearing test	0.00	0.37	0.38	NA	NA	0.03	0.40	0.41	NA	NA	XXX
92564		A	Sisi hearing test	0.00	0.47	0.48	NA	NA	0.04	0.51	0.52	NA	NA	XXX
92565		A	Stenger test, pure tone	0.00	0.39	0.40	NA	NA	0.03	0.42	0.43	NA	NA	XXX
92567		A	Tympanometry	0.00	0.52	0.53	NA	NA	0.05	0.57	0.58	NA	NA	XXX
92568		A	Acoustic reflex testing	0.00	0.37	0.38	NA	NA	0.03	0.40	0.41	NA	NA	XXX
92569		A	Acoustic reflex decay test	0.00	0.40	0.41	NA	NA	0.03	0.43	0.44	NA	NA	XXX
92571		A	Filtered speech hearing test	0.00	0.38	0.39	NA	NA	0.03	0.41	0.42	NA	NA	XXX
92572		A	Staggered spondaic word test	0.00	0.09	0.09	NA	NA	0.01	0.10	0.10	NA	NA	XXX
92573		A	Lombard test	0.00	0.35	0.35	NA	NA	0.03	0.38	0.38	NA	NA	XXX
92575		A	Sensorineural acuity test	0.00	0.30	0.30	NA	NA	0.02	0.32	0.32	NA	NA	XXX
92576		A	Synthetic sentence test	0.00	0.44	0.45	NA	NA	0.04	0.48	0.49	NA	NA	XXX
92577		A	Stenger test, speech	0.00	0.71	0.72	NA	NA	0.06	0.77	0.78	NA	NA	XXX
92579		A	Visual audiometry (vra)	0.00	0.72	0.73	NA	NA	0.05	0.77	0.78	NA	NA	XXX
92582		A	Conditioning play audiometry	0.00	0.72	0.73	NA	NA	0.05	0.77	0.78	NA	NA	XXX
92583		A	Select picture audiometry	0.00	0.88	0.89	NA	NA	0.07	0.95	0.96	NA	NA	XXX
92584		A	Electrocochleography	0.00	2.46	2.49	NA	NA	0.17	2.63	2.66	NA	NA	XXX
92585		A	Auditor evoke potent, compre	0.50	2.06	2.43	2.06	2.43	0.14	2.70	3.07	2.70	3.07	XXX
92585	26	A	Auditor evoke potent, compre	0.50	0.22	0.57	0.22	0.57	0.02	0.74	1.09	0.74	1.09	XXX
92585	TC	A	Auditor evoke potent, compre	0.00	1.84	1.86	NA	NA	0.12	1.96	1.98	NA	NA	XXX
92586		A	Auditor evoke potent, limit	0.00	1.84	1.84	NA	NA	0.12	1.96	1.96	NA	NA	XXX
92587		A	Evoked auditory test	0.13	1.37	1.39	1.37	1.39	0.10	1.60	1.62	1.60	1.62	XXX
92587	26	A	Evoked auditory test	0.13	0.07	0.08	0.07	0.08	0.01	0.21	0.22	0.21	0.22	XXX
92587	TC	A	Evoked auditory test	0.00	1.30	1.31	NA	NA	0.09	1.39	1.40	NA	NA	XXX
92588		A	Evoked auditory test	0.36	1.63	1.69	1.63	1.69	0.12	2.11	2.17	2.11	2.17	XXX
92588	26	A	Evoked auditory test	0.36	0.17	0.21	0.17	0.21	0.01	0.54	0.58	0.54	0.58	XXX
92588	TC	A	Evoked auditory test	0.00	1.46	1.48	NA	NA	0.11	1.57	1.59	NA	NA	XXX
92589		A	Auditory function test(s)	0.00	0.53	0.54	NA	NA	0.05	0.58	0.59	NA	NA	XXX
92590		N	Hearing aid exam, one ear	0.00	0.00	0.00	0.00	0.00	0.00	0.00	0.00	0.00	0.00	XXX
92591		N	Hearing aid exam, both ears	0.00	0.00	0.00	0.00	0.00	0.00	0.00	0.00	0.00	0.00	XXX
92592		N	Hearing aid check, one ear	0.00	0.00	0.00	0.00	0.00	0.00	0.00	0.00	0.00	0.00	XXX
92593		N	Hearing aid check, both ears	0.00	0.00	0.00	0.00	0.00	0.00	0.00	0.00	0.00	0.00	XXX
92594		N	Electro hearng aid test, one	0.00	0.00	0.00	0.00	0.00	0.00	0.00	0.00	0.00	0.00	XXX
92595		N	Electro hearng aid tst, both	0.00	0.00	0.00	0.00	0.00	0.00	0.00	0.00	0.00	0.00	XXX
92596		A	Ear protector evaluation	0.00	0.59	0.60	NA	NA	0.05	0.64	0.65	NA	NA	XXX
92597		N	Oral speech device eval	+1.35	1.49	1.39	0.54	0.68	0.05	2.89	2.79	1.94	2.08	XXX
92598		N	Modify oral speech device	+0.99	0.76	0.75	0.40	0.48	0.04	1.79	1.78	1.43	1.51	XXX
92599		C	ENT procedure/service	0.00	0.00	0.00	0.00	0.00	0.00	0.00	0.00	0.00	0.00	XXX
92599	26	C	ENT procedure/service	0.00	0.00	0.00	0.00	0.00	0.00	0.00	0.00	0.00	0.00	XXX
92599	TC	C	ENT procedure/service	0.00	0.00	0.00	0.00	0.00	0.00	0.00	0.00	0.00	0.00	XXX
92950		A	Heart/lung resuscitation cpr	3.80	1.38	1.65	1.17	1.49	0.21	5.39	5.66	5.18	5.50	000
92953		A	Temporary external pacing	0.23	NA	NA	0.24	0.25	0.01	NA	NA	0.48	0.49	000
92960		A	Cardioversion electric, ext	2.25	2.19	2.15	0.93	1.21	0.08	4.52	4.48	3.26	3.54	000
92961		A	Cardioversion, electric, int	4.60	NA	NA	1.96	1.96	0.17	NA	NA	6.73	6.73	000
92970		A	Cardioassist, internal	3.52	NA	NA	1.06	1.74	0.17	NA	NA	4.75	5.43	000
92971		A	Cardioassist, external	1.77	NA	NA	0.92	0.99	0.06	NA	NA	2.75	2.82	000
92975		A	Dissolve clot, heart vessel	7.25	NA	NA	3.16	3.92	0.22	NA	NA	10.63	11.39	000
92977		A	Dissolve clot, heart vessel	0.00	7.99	8.08	7.99	8.08	0.38	8.37	8.46	8.37	8.46	XXX
92978		A	Intravasc us, heart add-on	1.80	5.31	5.45	5.31	5.45	0.26	7.37	7.51	7.37	7.51	ZZZ
92978	26	A	Intravasc us, heart add-on	1.80	0.78	0.87	0.78	0.87	0.06	2.64	2.73	2.64	2.73	ZZZ
92978	TC	A	Intravasc us, heart add-on	0.00	4.53	4.58	NA	NA	0.20	4.73	4.78	NA	NA	ZZZ
92979		A	Intravasc us, heart add-on	1.44	2.91	3.00	2.91	3.00	0.15	4.50	4.59	4.50	4.59	ZZZ
92979	26	A	Intravasc us, heart add-on	1.44	0.63	0.70	0.63	0.70	0.04	2.11	2.18	2.11	2.18	ZZZ
92979	TC	A	Intravasc us, heart add-on	0.00	2.28	2.30	NA	NA	0.11	2.39	2.41	NA	NA	ZZZ
92980		A	Insert intracoronary stent	14.84	NA	NA	6.47	9.28	0.78	NA	NA	22.09	24.90	000
92981		A	Insert intracoronary stent	4.17	NA	NA	1.81	2.60	0.21	NA	NA	6.19	6.98	ZZZ
92982		A	Coronary artery dilation	10.98	NA	NA	4.81	6.89	0.57	NA	NA	16.36	18.44	000
92984		A	Coronary artery dilation	2.97	NA	NA	1.29	1.86	0.16	NA	NA	4.42	4.99	ZZZ
92986		A	Revision of aortic valve	21.80	NA	NA	11.22	11.68	1.14	NA	NA	34.16	34.62	090
92987		A	Revision of mitral valve	22.70	NA	NA	11.62	12.03	1.18	NA	NA	35.50	35.91	090
92990		A	Revision of pulmonary valve	17.34	NA	NA	9.38	9.64	0.90	NA	NA	27.62	27.88	090
92992		C	Revision of heart chamber	0.00	0.00	0.00	0.00	0.00	0.00	0.00	0.00	0.00	0.00	090
92993		C	Revision of heart chamber	0.00	0.00	0.00	0.00	0.00	0.00	0.00	0.00	0.00	0.00	090
92995		A	Coronary atherectomy	12.09	NA	NA	5.27	7.56	0.63	NA	NA	17.99	20.28	000
92996		A	Coronary atherectomy add-on	3.26	NA	NA	1.45	2.06	0.17	NA	NA	4.88	5.49	ZZZ
92997		A	Pul art balloon repr, percut	12.00	NA	NA	5.06	7.38	0.63	NA	NA	17.69	20.01	000
92998		A	Pul art balloon repr, percut	6.00	NA	NA	2.45	2.87	0.31	NA	NA	8.76	9.18	ZZZ
93000		A	Electrocardiogram, complete	0.17	0.52	0.56	NA	NA	0.03	0.72	0.76	NA	NA	XXX
93005		A	Electrocardiogram, tracing	0.00	0.45	0.46	NA	NA	0.02	0.47	0.48	NA	NA	XXX
93010		A	Electrocardiogram report	0.17	0.07	0.10	0.07	0.10	0.01	0.25	0.28	0.25	0.28	XXX
93012		A	Transmission of ecg	0.00	2.34	2.37	NA	NA	0.15	2.49	2.52	NA	NA	XXX
93014		A	Report on transmitted ecg	0.52	0.20	0.26	0.20	0.26	0.02	0.74	0.80	0.74	0.80	XXX
93015		A	Cardiovascular stress test	0.75	1.98	2.12	NA	NA	0.11	2.84	2.98	NA	NA	XXX
93016		A	Cardiovascular stress test	0.45	0.19	0.25	0.19	0.25	0.01	0.65	0.71	0.65	0.71	XXX
93017		A	Cardiovascular stress test	0.00	1.67	1.69	NA	NA	0.09	1.76	1.78	NA	NA	XXX
93018		A	Cardiovascular stress test	0.30	0.12	0.18	0.12	0.18	0.01	0.43	0.49	0.43	0.49	XXX
93024		A	Cardiac drug stress test	1.17	1.60	1.84	1.60	1.84	0.11	2.88	3.12	2.88	3.12	XXX
93024	26	A	Cardiac drug stress test	1.17	0.49	0.72	0.49	0.72	0.04	1.70	1.93	1.70	1.93	XXX
93024	TC	A	Cardiac drug stress test	0.00	1.11	1.12	NA	NA	0.07	1.18	1.19	NA	NA	XXX
93040		A	Rhythm ECG with report	0.16	0.19	0.21	NA	NA	0.02	0.37	0.39	NA	NA	XXX
93041		A	Rhythm ECG, tracing	0.00	0.14	0.14	NA	NA	0.01	0.15	0.15	NA	NA	XXX
93042		A	Rhythm ECG, report	0.16	0.05	0.07	0.05	0.07	0.01	0.22	0.24	0.22	0.24	XXX

[1] CPT codes and descriptions only are copyright 2000 American Medical Association. All Rights Reserved. Applicable FARS/DFARS Apply.
[2] Copyright 1994 American Dental Association. All rights reserved.
[3] + Indicates RVUs are not used for Medicare payment.
[4] PE RVUs = Practice Expense Relative Value Units.

ADDENDUM B.—RELATIVE VALUE UNITS (RVU'S) AND RELATED INFORMATION—Continued

CPT[1]/ HCPCS[2]	MOD	Status	Description	Physician Work RVUs[3]	Fully Implemented Non-Facility PE RVUs	Year 2001 Transitional Non-Facility PE RVUs	Fully Implemented Facility PE RVUs	Year 2001 Transitional Facility PE RVUs	Mal-Practice RVUs	Fully Implemented Non-Facility Total	Year 2001 Transitional Non-Facility Total	Fully Implemented Facility Total	Year 2001 Transitional Facility Total	Global
93224		A	ECG monitor/report, 24 hrs	0.52	3.61	3.74	NA	NA	0.21	4.34	4.47	NA	NA	XXX
93225		A	ECG monitor/record, 24 hrs	0.00	1.23	1.24	NA	NA	0.07	1.30	1.31	NA	NA	XXX
93226		A	ECG monitor/report, 24 hrs	0.00	2.17	2.19	NA	NA	0.12	2.29	2.31	NA	NA	XXX
93227		A	ECG monitor/review, 24 hrs	0.52	0.21	0.31	0.21	0.31	0.02	0.75	0.85	0.75	0.85	XXX
93230		A	ECG monitor/report, 24 hrs	0.52	3.88	4.02	NA	NA	0.22	4.62	4.76	NA	NA	XXX
93231		A	Ecg monitor/record, 24 hrs	0.00	1.51	1.53	NA	NA	0.09	1.60	1.62	NA	NA	XXX
93232		A	ECG monitor/report, 24 hrs	0.00	2.16	2.18	NA	NA	0.11	2.27	2.29	NA	NA	XXX
93233		A	ECG monitor/review, 24 hrs	0.52	0.21	0.31	0.21	0.31	0.02	0.75	0.85	0.75	0.85	XXX
93235		A	ECG monitor/report, 24 hrs	0.45	2.78	2.90	NA	NA	0.13	3.36	3.48	NA	NA	XXX
93236		A	ECG monitor/report, 24 hrs	0.00	2.60	2.63	NA	NA	0.12	2.72	2.75	NA	NA	XXX
93237		A	ECG monitor/review, 24 hrs	0.45	0.18	0.27	0.18	0.27	0.01	0.64	0.73	0.64	0.73	XXX
93268		A	ECG record/review	0.52	3.77	3.87	NA	NA	0.24	4.53	4.63	NA	NA	XXX
93270		A	ECG recording	0.00	1.23	1.24	NA	NA	0.07	1.30	1.31	NA	NA	XXX
93271		A	Ecg/monitoring and analysis	0.00	2.34	2.37	NA	NA	0.15	2.49	2.52	NA	NA	XXX
93272		A	Ecg/review, interpret only	0.52	0.20	0.26	0.20	0.26	0.02	0.74	0.80	0.74	0.80	XXX
93278		A	ECG/signal-averaged	0.25	1.25	1.31	1.25	1.31	0.10	1.60	1.66	1.60	1.66	XXX
93278	26	A	ECG/signal-averaged	0.25	0.11	0.16	0.11	0.16	0.01	0.37	0.42	0.37	0.42	XXX
93278	TC	A	ECG/signal-averaged	0.00	1.14	1.15	NA	NA	0.09	1.23	1.24	NA	NA	XXX
93303		A	Echo transthoracic	1.30	4.33	4.52	4.33	4.52	0.23	5.86	6.05	5.86	6.05	XXX
93303	26	A	Echo transthoracic	1.30	0.50	0.65	0.50	0.65	0.04	1.84	1.99	1.84	1.99	XXX
93303	TC	A	Echo transthoracic	0.00	3.83	3.87	NA	NA	0.19	4.02	4.06	NA	NA	XXX
93304		A	Echo transthoracic	0.75	2.24	2.37	2.24	2.37	0.13	3.12	3.25	3.12	3.25	XXX
93304	26	A	Echo transthoracic	0.75	0.31	0.42	0.31	0.42	0.02	1.08	1.19	1.08	1.19	XXX
93304	TC	A	Echo transthoracic	0.00	1.93	1.95	NA	NA	0.11	2.04	2.06	NA	NA	XXX
93307		A	Echo exam of heart	0.92	4.22	4.44	4.22	4.44	0.22	5.36	5.58	5.36	5.58	XXX
93307	26	A	Echo exam of heart	0.92	0.39	0.57	0.39	0.57	0.03	1.34	1.52	1.34	1.52	XXX
93307	TC	A	Echo exam of heart	0.00	3.83	3.87	NA	NA	0.19	4.02	4.06	NA	NA	XXX
93308		A	Echo exam of heart	0.53	2.15	2.27	2.15	2.27	0.13	2.81	2.93	2.81	2.93	XXX
93308	26	A	Echo exam of heart	0.53	0.22	0.32	0.22	0.32	0.02	0.77	0.87	0.77	0.87	XXX
93308	TC	A	Echo exam of heart	0.00	1.93	1.95	NA	NA	0.11	2.04	2.06	NA	NA	XXX
93312		A	Echo transesophageal	2.20	4.65	4.84	4.65	4.84	0.32	7.17	7.36	7.17	7.36	XXX
93312	26	A	Echo transesophageal	2.20	0.89	1.04	0.89	1.04	0.08	3.17	3.32	3.17	3.32	XXX
93312	TC	A	Echo transesophageal	0.00	3.76	3.80	NA	NA	0.24	4.00	4.04	NA	NA	XXX
93313		A	Echo transesophageal	0.95	4.30	3.41	0.22	0.35	0.05	5.30	4.41	1.22	1.35	XXX
93314		A	Echo transesophageal	1.25	4.28	4.37	4.28	4.37	0.28	5.81	5.90	5.81	5.90	XXX
93314	26	A	Echo transesophageal	1.25	0.52	0.57	0.52	0.57	0.04	1.81	1.86	1.81	1.86	XXX
93314	TC	A	Echo transesophageal	0.00	3.76	3.80	NA	NA	0.24	4.00	4.04	NA	NA	XXX
93315		A	Echo transesophageal	2.78	4.86	4.99	4.86	4.99	0.34	7.98	8.11	7.98	8.11	XXX
93315	26	A	Echo transesophageal	2.78	1.10	1.19	1.10	1.19	0.10	3.98	4.07	3.98	4.07	XXX
93315	TC	A	Echo transesophageal	0.00	3.76	3.80	NA	NA	0.24	4.00	4.04	NA	NA	XXX
93316		A	Echo transesophageal	0.95	3.09	2.50	0.23	0.36	0.05	4.09	3.50	1.23	1.36	XXX
93317		A	Echo transesophageal	1.83	4.52	4.55	4.52	4.55	0.30	6.65	6.68	6.65	6.68	XXX
93317	26	A	Echo transesophageal	1.83	0.76	0.75	0.76	0.75	0.06	2.65	2.64	2.65	2.64	XXX
93317	TC	A	Echo transesophageal	0.00	3.76	3.80	NA	NA	0.24	4.00	4.04	NA	NA	XXX
93318		C	Echo transesophageal intraop	0.00	0.00	0.00	0.00	0.00	0.00	0.00	0.00	0.00	0.00	XXX
93318	26	C	Echo transesophageal intraop	0.00	0.00	0.00	0.00	0.00	0.00	0.00	0.00	0.00	0.00	XXX
93318	TC	C	Echo transesophageal intraop	0.00	0.00	0.00	0.00	0.00	0.00	0.00	0.00	0.00	0.00	XXX
93320		A	Doppler echo exam, heart	0.38	1.86	1.96	1.86	1.96	0.11	2.35	2.45	2.35	2.45	ZZZ
93320	26	A	Doppler echo exam, heart	0.38	0.16	0.24	0.16	0.24	0.01	0.55	0.63	0.55	0.63	ZZZ
93320	TC	A	Doppler echo exam, heart	0.00	1.70	1.72	NA	NA	0.10	1.80	1.82	NA	NA	ZZZ
93321		A	Doppler echo exam, heart	0.15	1.16	1.20	1.16	1.20	0.08	1.39	1.43	1.39	1.43	ZZZ
93321	26	A	Doppler echo exam, heart	0.15	0.06	0.09	0.06	0.09	0.01	0.22	0.25	0.22	0.25	ZZZ
93321	TC	A	Doppler echo exam, heart	0.00	1.10	1.11	NA	NA	0.07	1.17	1.18	NA	NA	ZZZ
93325		A	Doppler color flow add-on	0.07	2.91	2.94	2.91	2.94	0.18	3.16	3.19	3.16	3.19	ZZZ
93325	26	A	Doppler color flow add-on	0.07	0.03	0.03	0.03	0.03	0.01	0.11	0.11	0.11	0.11	ZZZ
93325	TC	A	Doppler color flow add-on	0.00	2.88	2.91	NA	NA	0.17	3.05	3.08	NA	NA	ZZZ
93350		A	Echo transthoracic	0.78	2.08	2.25	2.08	2.25	0.13	2.99	3.16	2.99	3.16	XXX
93350	26	A	Echo transthoracic	0.78	0.33	0.48	0.33	0.48	0.02	1.13	1.28	1.13	1.28	XXX
93350	TC	A	Echo transthoracic	0.00	1.75	1.77	NA	NA	0.11	1.86	1.88	NA	NA	XXX
93501		A	Right heart catheterization	3.02	17.59	18.46	17.59	18.46	1.03	21.64	22.51	21.64	22.51	000
93501	26	A	Right heart catheterization	3.02	1.27	1.85	1.27	1.85	0.16	4.45	5.03	4.45	5.03	000
93501	TC	A	Right heart catheterization	0.00	16.32	16.61	NA	NA	0.87	17.19	17.48	NA	NA	000
93503		A	Insert/place heart catheter	2.91	NA	NA	0.75	1.21	0.16	NA	NA	3.82	4.28	000
93505		A	Biopsy of heart lining	4.38	3.78	4.18	3.78	4.18	0.36	8.52	8.92	8.52	8.92	000
93505	26	A	Biopsy of heart lining	4.38	1.87	2.23	1.87	2.23	0.23	6.48	6.84	6.48	6.84	000
93505	TC	A	Biopsy of heart lining	0.00	1.91	1.95	NA	NA	0.13	2.04	2.08	NA	NA	000
93508		A	Cath placement, angiography	4.10	13.94	14.47	13.94	14.47	0.75	18.79	19.32	18.79	19.32	000
93508	26	A	Cath placement, angiography	4.10	1.77	2.08	1.77	2.08	0.21	6.08	6.39	6.08	6.39	000
93508	TC	A	Cath placement, angiography	0.00	12.17	12.39	NA	NA	0.54	12.71	12.93	NA	NA	000
93510		A	Left heart catheterization	4.33	37.54	38.54	37.54	38.54	2.13	44.00	45.00	44.00	45.00	000
93510	26	A	Left heart catheterization	4.33	1.88	2.24	1.88	2.24	0.22	6.43	6.79	6.43	6.79	000
93510	TC	A	Left heart catheterization	0.00	35.66	36.30	NA	NA	1.91	37.57	38.21	NA	NA	000
93511		A	Left heart catheterization	5.03	36.89	37.69	36.89	37.69	2.11	44.03	44.83	44.03	44.83	000
93511	26	A	Left heart catheterization	5.03	2.18	2.35	2.18	2.35	0.26	7.47	7.64	7.47	7.64	000
93511	TC	A	Left heart catheterization	0.00	34.71	35.34	NA	NA	1.85	36.56	37.19	NA	NA	000
93514		A	Left heart catheterization	7.05	37.49	38.66	37.49	38.66	2.22	46.76	47.93	46.76	47.93	000
93514	26	A	Left heart catheterization	7.05	2.78	3.32	2.78	3.32	0.37	10.20	10.74	10.20	10.74	000
93514	TC	A	Left heart catheterization	0.00	34.71	35.34	NA	NA	1.85	36.56	37.19	NA	NA	000
93524		A	Left heart catheterization	6.95	48.31	49.66	48.31	49.66	2.79	58.05	59.40	58.05	59.40	000
93524	26	A	Left heart catheterization	6.95	2.95	3.48	2.95	3.48	0.36	10.26	10.79	10.26	10.79	000
93524	TC	A	Left heart catheterization	0.00	45.36	46.18	NA	NA	2.43	47.79	48.61	NA	NA	000
93526		A	Rt & Lt heart catheters	5.99	49.20	50.87	49.20	50.87	2.81	58.00	59.67	58.00	59.67	000
93526	26	A	Rt & Lt heart catheters	5.99	2.59	3.42	2.59	3.42	0.31	8.89	9.72	8.89	9.72	000

[1] CPT codes and descriptions only are copyright 2000 American Medical Association. All Rights Reserved. Applicable FARS/DFARS Apply.
[2] Copyright 1994 American Dental Association. All rights reserved.
[3] + Indicates RVUs are not used for Medicare payment.
[4] PE RVUs = Practice Expense Relative Value Units.

ADDENDUM B.—RELATIVE VALUE UNITS (RVU'S) AND RELATED INFORMATION—Continued

CPT[1]/ HCPCS[2]	MOD	Status	Description	Physician Work RVUs[3]	Fully Implemented Non-Facility PE RVUs	Year 2001 Transitional Non-Facility PE RVUs	Fully Implemented Facility PE RVUs	Year 2001 Transitional Facility PE RVUs	Mal-Practice RVUs	Fully Implemented Non-Facility Total	Year 2001 Transitional Non-Facility Total	Fully Implemented Facility Total	Year 2001 Transitional Facility Total	Global
93526	TC	A	Rt & Lt heart catheters	0.00	46.61	47.45	NA	NA	2.50	49.11	49.95	NA	NA	000
93527		A	Rt & Lt heart catheters	7.28	48.50	50.47	48.50	50.47	2.81	58.59	60.56	58.59	60.56	000
93527	26	A	Rt & Lt heart catheters	7.28	3.14	4.29	3.14	4.29	0.38	10.80	11.95	10.80	11.95	000
93527	TC	A	Rt & Lt heart catheters	0.00	45.36	46.18	NA	NA	2.43	47.79	48.61	NA	NA	000
93528		A	Rt & Lt heart catheters	9.00	49.31	50.35	49.31	50.35	2.90	61.21	62.25	61.21	62.25	000
93528	26	A	Rt & Lt heart catheters	9.00	3.95	4.17	3.95	4.17	0.47	13.42	13.64	13.42	13.64	000
93528	TC	A	Rt & Lt heart catheters	0.00	45.36	46.18	NA	NA	2.43	47.79	48.61	NA	NA	000
93529		A	Rt, Lt heart catheterization	4.80	47.42	48.52	47.42	48.52	2.68	54.90	56.00	54.90	56.00	000
93529	26	A	Rt, Lt heart catheterization	4.80	2.06	2.34	2.06	2.34	0.25	7.11	7.39	7.11	7.39	000
93529	TC	A	Rt, Lt heart catheterization	0.00	45.36	46.18	NA	NA	2.43	47.79	48.61	NA	NA	000
93530		A	Rt heart cath, congenital	4.23	17.91	18.78	17.91	18.78	1.11	23.25	24.12	23.25	24.12	000
93530	26	A	Rt heart cath, congenital	4.23	1.59	2.17	1.59	2.17	0.24	6.06	6.64	6.06	6.64	000
93530	TC	A	Rt heart cath, congenital	0.00	16.32	16.61	NA	NA	0.87	17.19	17.48	NA	NA	000
93531		A	R & l heart cath, congenital	8.35	49.98	51.46	49.98	51.46	2.96	61.29	62.77	61.29	62.77	000
93531	26	A	R & l heart cath, congenital	8.35	3.37	4.01	3.37	4.01	0.46	12.18	12.82	12.18	12.82	000
93531	TC	A	R & l heart cath, congenital	0.00	46.61	47.45	NA	NA	2.50	49.11	49.95	NA	NA	000
93532		A	R & l heart cath, congenital	10.00	49.37	51.13	49.37	51.13	2.95	62.32	64.08	62.32	64.08	000
93532	26	A	R & l heart cath, congenital	10.00	4.01	4.95	4.01	4.95	0.52	14.53	15.47	14.53	15.47	000
93532	TC	A	R & l heart cath, congenital	0.00	45.36	46.18	NA	NA	2.43	47.79	48.61	NA	NA	000
93533		A	R & l heart cath, congenital	6.70	47.90	48.88	47.90	48.88	2.86	57.46	58.44	57.46	58.44	000
93533	26	A	R & l heart cath, congenital	6.70	2.54	2.70	2.54	2.70	0.43	9.67	9.83	9.67	9.83	000
93533	TC	A	R & l heart cath, congenital	0.00	45.36	46.18	NA	NA	2.43	47.79	48.61	NA	NA	000
93536		A	Insert circulation assi	4.85	NA	NA	2.12	3.04	0.27	NA	NA	7.24	8.16	000
93539		A	Injection, cardiac cath	0.40	0.83	0.86	0.17	0.25	0.01	1.24	1.27	0.58	0.66	000
93540		A	Injection, cardiac cath	0.43	0.84	0.87	0.19	0.27	0.01	1.28	1.31	0.63	0.71	000
93541		A	Injection for lung angiogram	0.29	NA	NA	0.13	0.19	0.01	NA	NA	0.43	0.49	000
93542		A	Injection for heart x-rays	0.29	NA	NA	0.12	0.18	0.01	NA	NA	0.42	0.48	000
93543		A	Injection for heart x-rays	0.29	0.53	0.55	0.13	0.19	0.01	0.83	0.85	0.43	0.49	000
93544		A	Injection for aortography	0.25	0.52	0.55	0.11	0.16	0.01	0.78	0.81	0.37	0.42	000
93545		A	Inject for coronary x-rays	0.40	0.83	0.74	0.17	0.25	0.01	1.24	1.15	0.58	0.66	000
93555		A	Imaging, cardiac cath	0.81	6.40	6.50	6.40	6.50	0.31	7.52	7.62	7.52	7.62	XXX
93555	26	A	Imaging, cardiac cath	0.81	0.35	0.34	0.35	0.34	0.03	1.19	1.18	1.19	1.18	XXX
93555	TC	A	Imaging, cardiac cath	0.00	6.05	6.16	NA	NA	0.28	6.33	6.44	NA	NA	XXX
93556		A	Imaging, cardiac cath	0.83	9.91	10.11	9.91	10.11	0.45	11.19	11.39	11.19	11.39	XXX
93556	26	A	Imaging, cardiac cath	0.83	0.36	0.39	0.36	0.39	0.03	1.22	1.25	1.22	1.25	XXX
93556	TC	A	Imaging, cardiac cath	0.00	9.55	9.72	NA	NA	0.42	9.97	10.14	NA	NA	XXX
93561		A	Cardiac output measurement	0.50	0.69	0.81	0.69	0.81	0.07	1.26	1.38	1.26	1.38	000
93561	26	A	Cardiac output measurement	0.50	0.17	0.28	0.17	0.28	0.02	0.69	0.80	0.69	0.80	000
93561	TC	A	Cardiac output measurement	0.00	0.52	0.53	NA	NA	0.05	0.57	0.58	NA	NA	000
93562		A	Cardiac output measurement	0.16	0.35	0.40	0.35	0.40	0.04	0.55	0.60	0.55	0.60	000
93562	26	A	Cardiac output measurement	0.16	0.05	0.09	0.05	0.09	0.01	0.22	0.26	0.22	0.26	000
93562	TC	A	Cardiac output measurement	0.00	0.30	0.31	NA	NA	0.03	0.33	0.34	NA	NA	000
93571		A	Heart flow reserve measure	1.80	5.29	5.29	5.29	5.29	0.31	7.40	7.40	7.40	7.40	ZZZ
93571	26	A	Heart flow reserve measure	1.80	0.76	0.76	0.76	0.76	0.11	2.67	2.67	2.67	2.67	ZZZ
93571	TC	A	Heart flow reserve measure	0.00	4.53	4.53	NA	NA	0.20	4.73	4.73	NA	NA	ZZZ
93572		A	Heart flow reserve measure	1.44	2.88	2.88	2.88	2.88	0.28	4.60	4.60	4.60	4.60	ZZZ
93572	26	A	Heart flow reserve measure	1.44	0.60	0.60	0.60	0.60	0.17	2.21	2.21	2.21	2.21	ZZZ
93572	TC	A	Heart flow reserve measure	0.00	2.28	2.28	NA	NA	0.11	2.39	2.39	NA	NA	ZZZ
93600		A	Bundle of His recording	2.12	2.85	3.28	2.85	3.28	0.22	5.19	5.62	5.19	5.62	000
93600	26	A	Bundle of His recording	2.12	0.91	1.32	0.91	1.32	0.11	3.14	3.55	3.14	3.55	000
93600	TC	A	Bundle of His recording	0.00	1.94	1.96	NA	NA	0.11	2.05	2.07	NA	NA	000
93602		A	Intra-atrial recording	2.12	2.02	2.28	2.02	2.28	0.18	4.32	4.58	4.32	4.58	000
93602	26	A	Intra-atrial recording	2.12	0.92	1.17	0.92	1.17	0.12	3.16	3.41	3.16	3.41	000
93602	TC	A	Intra-atrial recording	0.00	1.10	1.11	NA	NA	0.06	1.16	1.17	NA	NA	000
93603		A	Right ventricular recording	2.12	2.59	2.98	2.59	2.98	0.20	4.91	5.30	4.91	5.30	000
93603	26	A	Right ventricular recording	2.12	0.92	1.29	0.92	1.29	0.11	3.15	3.52	3.15	3.52	000
93603	TC	A	Right ventricular recording	0.00	1.67	1.69	NA	NA	0.09	1.76	1.78	NA	NA	000
93607		A	Left ventricular recording	3.26	2.91	3.17	2.91	3.17	0.26	6.43	6.69	6.43	6.69	000
93607	26	A	Left ventricular recording	3.26	1.43	1.67	1.43	1.67	0.17	4.86	5.10	4.86	5.10	000
93607	TC	A	Left ventricular recording	0.00	1.48	1.50	NA	NA	0.09	1.57	1.59	NA	NA	000
93609		A	Mapping of tachycardia	10.07	7.04	7.03	7.04	7.03	0.66	17.77	17.76	17.77	17.76	000
93609	26	A	Mapping of tachycardia	10.07	4.34	4.30	4.34	4.30	0.52	14.93	14.89	14.93	14.89	000
93609	TC	A	Mapping of tachycardia	0.00	2.70	2.73	NA	NA	0.14	2.84	2.87	NA	NA	000
93610		A	Intra-atrial pacing	3.02	2.64	2.96	2.64	2.96	0.25	5.91	6.23	5.91	6.23	000
93610	26	A	Intra-atrial pacing	3.02	1.29	1.60	1.29	1.60	0.17	4.48	4.79	4.48	4.79	000
93610	TC	A	Intra-atrial pacing	0.00	1.35	1.36	NA	NA	0.08	1.43	1.44	NA	NA	000
93612		A	Intraventricular pacing	3.02	2.90	3.23	2.90	3.23	0.26	6.18	6.51	6.18	6.51	000
93612	26	A	Intraventricular pacing	3.02	1.30	1.61	1.30	1.61	0.17	4.49	4.80	4.49	4.80	000
93612	TC	A	Intraventricular pacing	0.00	1.60	1.62	NA	NA	0.09	1.69	1.71	NA	NA	000
93615		A	Esophageal recording	0.99	0.72	0.72	0.72	0.72	0.05	1.76	1.76	1.76	1.76	000
93615	26	A	Esophageal recording	0.99	0.40	0.40	0.40	0.40	0.03	1.42	1.42	1.42	1.42	000
93615	TC	A	Esophageal recording	0.00	0.32	0.32	NA	NA	0.02	0.34	0.34	NA	NA	000
93616		A	Esophageal recording	1.49	0.82	1.07	0.82	1.07	0.08	2.39	2.64	2.39	2.64	000
93616	26	A	Esophageal recording	1.49	0.50	0.75	0.50	0.75	0.06	2.05	2.30	2.05	2.30	000
93616	TC	A	Esophageal recording	0.00	0.32	0.32	NA	NA	0.02	0.34	0.34	NA	NA	000
93618		A	Heart rhythm pacing	4.26	5.78	6.63	5.78	6.63	0.42	10.46	11.31	10.46	11.31	000
93618	26	A	Heart rhythm pacing	4.26	1.84	2.65	1.84	2.65	0.22	6.32	7.13	6.32	7.13	000
93618	TC	A	Heart rhythm pacing	0.00	3.94	3.98	NA	NA	0.20	4.14	4.18	NA	NA	000
93619		A	Electrophysiology evaluation	7.32	10.80	12.28	10.80	12.28	0.77	18.89	20.37	18.89	20.37	000
93619	26	A	Electrophysiology evaluation	7.32	3.15	4.55	3.15	4.55	0.38	10.85	12.25	10.85	12.25	000
93619	TC	A	Electrophysiology evaluation	0.00	7.65	7.73	NA	NA	0.39	8.04	8.12	NA	NA	000
93620		A	Electrophysiology evaluation	11.59	13.91	16.21	13.91	16.21	1.04	26.54	28.84	26.54	28.84	000
93620	26	A	Electrophysiology evaluation	11.59	5.01	7.22	5.01	7.22	0.60	17.20	19.41	17.20	19.41	000

[1] CPT codes and descriptions only are copyright 2000 American Medical Association. All Rights Reserved. Applicable FARS/DFARS Apply.
[2] Copyright 1994 American Dental Association. All rights reserved.
[3] + Indicates RVUs are not used for Medicare payment.
[4] PE RVUs = Practice Expense Relative Value Units.

ADDENDUM B.—RELATIVE VALUE UNITS (RVU'S) AND RELATED INFORMATION—Continued

CPT[1]/ HCPCS[2]	MOD	Status	Description	Physician Work RVUs[3]	Fully Implemented Non-Facility PE RVUs	Year 2001 Transitional Non-Facility PE RVUs	Fully Implemented Facility PE RVUs	Year 2001 Transitional Facility PE RVUs	Mal-Practice RVUs	Fully Implemented Non-Facility Total	Year 2001 Transitional Non-Facility Total	Fully Implemented Facility Total	Year 2001 Transitional Facility Total	Global
93620	TC	A	Electrophysiology evaluation	0.00	8.90	8.99	NA	NA	0.44	9.34	9.43	NA	NA	000
93621		C	Electrophysiology evaluation	0.00	0.00	0.00	0.00	0.00	0.00	0.00	0.00	0.00	0.00	000
93621	26	A	Electrophysiology evaluation	12.66	5.47	7.88	5.47	7.88	0.66	18.79	21.20	18.79	21.20	000
93621	TC	C	Electrophysiology evaluation	0.00	0.00	0.00	0.00	0.00	0.00	0.00	0.00	0.00	0.00	000
93622		C	Electrophysiology evaluation	0.00	0.00	0.00	0.00	0.00	0.00	0.00	0.00	0.00	0.00	000
93622	26	A	Electrophysiology evaluation	12.74	5.48	7.91	5.48	7.91	0.67	18.89	21.32	18.89	21.32	000
93622	TC	C	Electrophysiology evaluation	0.00	0.00	0.00	0.00	0.00	0.00	0.00	0.00	0.00	0.00	000
93623		C	Stimulation, pacing heart	0.00	0.00	0.00	0.00	0.00	0.00	0.00	0.00	0.00	0.00	ZZZ
93623	26	A	Stimulation, pacing heart	2.85	1.23	1.68	1.23	1.68	0.15	4.23	4.68	4.23	4.68	ZZZ
93623	TC	C	Stimulation, pacing heart	0.00	0.00	0.00	0.00	0.00	0.00	0.00	0.00	0.00	0.00	ZZZ
93624		A	Electrophysiologic study	4.81	4.03	4.35	4.03	4.35	0.36	9.20	9.52	9.20	9.52	000
93624	26	A	Electrophysiologic study	4.81	2.06	2.36	2.06	2.36	0.25	7.12	7.42	7.12	7.42	000
93624	TC	A	Electrophysiologic study	0.00	1.97	1.99	NA	NA	0.11	2.08	2.10	NA	NA	000
93631		A	Heart pacing, mapping	7.60	9.30	10.13	9.30	10.13	1.17	18.07	18.90	18.07	18.90	000
93631	26	A	Heart pacing, mapping	7.60	3.20	3.96	3.20	3.96	0.66	11.46	12.22	11.46	12.22	000
93631	TC	A	Heart pacing, mapping	0.00	6.10	6.17	NA	NA	0.51	6.61	6.68	NA	NA	000
93640		A	Evaluation heart device	3.52	8.59	9.35	8.59	9.35	0.53	12.64	13.40	12.64	13.40	000
93640	26	A	Evaluation heart device	3.52	1.47	2.15	1.47	2.15	0.18	5.17	5.85	5.17	5.85	000
93640	TC	A	Evaluation heart device	0.00	7.12	7.20	NA	NA	0.35	7.47	7.55	NA	NA	000
93641		A	Electrophysiology evaluation	5.93	9.68	10.89	9.68	10.89	0.66	16.27	17.48	16.27	17.48	000
93641	26	A	Electrophysiology evaluation	5.93	2.56	3.69	2.56	3.69	0.31	8.80	9.93	8.80	9.93	000
93641	TC	A	Electrophysiology evaluation	0.00	7.12	7.20	NA	NA	0.35	7.47	7.55	NA	NA	000
93642		A	Electrophysiology evaluation	4.89	9.17	10.20	9.17	10.20	0.51	14.57	15.60	14.57	15.60	000
93642	26	A	Electrophysiology evaluation	4.89	2.05	3.00	2.05	3.00	0.16	7.10	8.05	7.10	8.05	000
93642	TC	A	Electrophysiology evaluation	0.00	7.12	7.20	NA	NA	0.35	7.47	7.55	NA	NA	000
93650		A	Ablate heart dysrhythm focus	10.51	NA	NA	4.61	6.60	0.55	NA	NA	15.67	17.66	000
93651		A	Ablate heart dysrhythm focus	16.25	NA	NA	7.06	10.13	0.85	NA	NA	24.16	27.23	000
93652		A	Ablate heart dysrhythm focus	17.68	NA	NA	7.66	10.58	0.92	NA	NA	26.26	29.18	000
93660		A	Tilt table evaluation	1.89	2.49	2.68	2.49	2.68	0.08	4.46	4.65	4.46	4.65	000
93660	26	A	Tilt table evaluation	1.89	0.82	1.01	0.82	1.01	0.06	2.77	2.96	2.77	2.96	000
93660	TC	A	Tilt table evaluation	0.00	1.67	1.67	NA	NA	0.02	1.69	1.69	NA	NA	000
93662		A	Intracardiac ecg (ice)	2.80	4.98	4.98	4.98	4.98	0.41	8.19	8.19	8.19	8.19	ZZZ
93662	26	A	Intracardiac ecg (ice)	2.80	1.22	1.22	1.22	1.22	0.11	4.13	4.13	4.13	4.13	ZZZ
93662	TC	A	Intracardiac ecg (ice)	0.00	3.76	3.76	NA	NA	0.30	4.06	4.06	NA	NA	ZZZ
93668		N	Peripheral vascular rehab	0.00	0.00	0.00	0.00	0.00	0.01	0.01	0.01	0.01	0.01	XXX
93720		A	Total body plethysmography	0.17	0.75	0.81	NA	NA	0.06	0.98	1.04	NA	NA	XXX
93721		A	Plethysmography tracing	0.00	0.70	0.71	NA	NA	0.05	0.75	0.76	NA	NA	XXX
93722		A	Plethysmography report	0.17	0.05	0.10	0.05	0.09	0.01	0.23	0.28	0.23	0.27	XXX
93724		A	Analyze pacemaker system	4.89	6.08	6.37	6.08	6.37	0.38	11.35	11.64	11.35	11.64	000
93724	26	A	Analyze pacemaker system	4.89	2.14	2.39	2.14	2.39	0.18	7.21	7.46	7.21	7.46	000
93724	TC	A	Analyze pacemaker system	0.00	3.94	3.98	NA	NA	0.20	4.14	4.18	NA	NA	000
93727		A	Analyze ilr system	0.52	0.22	0.22	0.22	0.22	0.05	0.79	0.79	0.79	0.79	XXX
93731		A	Analyze pacemaker system	0.45	0.68	0.73	0.68	0.73	0.05	1.18	1.23	1.18	1.23	XXX
93731	26	A	Analyze pacemaker system	0.45	0.19	0.23	0.19	0.23	0.02	0.66	0.70	0.66	0.70	XXX
93731	TC	A	Analyze pacemaker system	0.00	0.49	0.50	NA	NA	0.03	0.52	0.53	NA	NA	XXX
93732		A	Analyze pacemaker system	0.92	0.90	0.93	0.90	0.93	0.06	1.88	1.91	1.88	1.91	XXX
93732	26	A	Analyze pacemaker system	0.92	0.39	0.41	0.39	0.41	0.03	1.34	1.36	1.34	1.36	XXX
93732	TC	A	Analyze pacemaker system	0.00	0.51	0.52	NA	NA	0.03	0.54	0.55	NA	NA	XXX
93733		A	Telephone analy, pacemaker	0.17	0.79	0.84	0.79	0.84	0.06	1.02	1.07	1.02	1.07	XXX
93733	26	A	Telephone analy, pacemaker	0.17	0.07	0.11	0.07	0.11	0.01	0.25	0.29	0.25	0.29	XXX
93733	TC	A	Telephone analy, pacemaker	0.00	0.72	0.73	NA	NA	0.05	0.77	0.78	NA	NA	XXX
93734		A	Analyze pacemaker system	0.38	0.51	0.56	0.51	0.56	0.03	0.92	0.97	0.92	0.97	XXX
93734	26	A	Analyze pacemaker system	0.38	0.16	0.21	0.16	0.21	0.01	0.55	0.60	0.55	0.60	XXX
93734	TC	A	Analyze pacemaker system	0.00	0.35	0.35	NA	NA	0.02	0.37	0.37	NA	NA	XXX
93735		A	Analyze pacemaker system	0.74	0.76	0.81	0.76	0.81	0.06	1.56	1.61	1.56	1.61	XXX
93735	26	A	Analyze pacemaker system	0.74	0.32	0.36	0.32	0.36	0.03	1.09	1.13	1.09	1.13	XXX
93735	TC	A	Analyze pacemaker system	0.00	0.44	0.45	NA	NA	0.03	0.47	0.48	NA	NA	XXX
93736		A	Telephone analy, pacemaker	0.15	0.69	0.73	0.69	0.73	0.06	0.90	0.94	0.90	0.94	XXX
93736	26	A	Telephone analy, pacemaker	0.15	0.07	0.10	0.07	0.10	0.01	0.23	0.26	0.23	0.26	XXX
93736	TC	A	Telephone analy, pacemaker	0.00	0.62	0.63	NA	NA	0.05	0.67	0.68	NA	NA	XXX
93737		A	Analyze cardio/defibrillator	0.45	0.68	0.72	0.68	0.72	0.04	1.17	1.21	1.17	1.21	XXX
93737	26	A	Analyze cardio/defibrillator	0.45	0.19	0.22	0.19	0.22	0.01	0.65	0.68	0.65	0.68	XXX
93737	TC	A	Analyze cardio/defibrillator	0.00	0.49	0.50	NA	NA	0.03	0.52	0.53	NA	NA	XXX
93738		A	Analyze cardio/defibrillator	0.92	0.90	0.92	0.90	0.92	0.06	1.88	1.90	1.88	1.90	XXX
93738	26	A	Analyze cardio/defibrillator	0.92	0.39	0.40	0.39	0.40	0.03	1.34	1.35	1.34	1.35	XXX
93738	TC	A	Analyze cardio/defibrillator	0.00	0.51	0.52	NA	NA	0.03	0.54	0.55	NA	NA	XXX
93740		B	Temperature gradient studies	+0.16	0.21	0.28	0.21	0.28	0.02	0.39	0.46	0.39	0.46	XXX
93740	26	B	Temperature gradient studies	+0.16	0.06	0.13	0.06	0.13	0.01	0.23	0.30	0.23	0.30	XXX
93740	TC	B	Temperature gradient studies	+0.00	0.15	0.15	NA	NA	0.01	0.16	0.16	NA	NA	XXX
93741		A	Analyze ht pace device sngl	0.80	0.98	0.98	0.98	0.98	0.05	1.83	1.83	1.83	1.83	XXX
93741	26	A	Analyze ht pace device sngl	0.80	0.32	0.32	0.32	0.32	0.02	1.14	1.14	1.14	1.14	XXX
93741	TC	A	Analyze ht pace device sngl	0.00	0.66	0.66	NA	NA	0.03	0.69	0.69	NA	NA	XXX
93742		A	Analyze ht pace device sngl	0.91	1.02	1.02	1.02	1.02	0.05	1.98	1.98	1.98	1.98	XXX
93742	26	A	Analyze ht pace device sngl	0.91	0.36	0.36	0.36	0.36	0.02	1.29	1.29	1.29	1.29	XXX
93742	TC	A	Analyze ht pace device sngl	0.00	0.66	0.66	NA	NA	0.03	0.69	0.69	NA	NA	XXX
93743		A	Analyze ht pace device dual	1.03	1.14	1.14	1.14	1.14	0.06	2.23	2.23	2.23	2.23	XXX
93743	26	A	Analyze ht pace device dual	1.03	0.41	0.41	0.41	0.41	0.03	1.47	1.47	1.47	1.47	XXX
93743	TC	A	Analyze ht pace device dual	0.00	0.73	0.73	NA	NA	0.03	0.76	0.76	NA	NA	XXX
93744		A	Analyze ht pace device dual	1.18	1.13	1.13	1.13	1.13	0.06	2.37	2.37	2.37	2.37	XXX
93744	26	A	Analyze ht pace device dual	1.18	0.47	0.47	0.47	0.47	0.03	1.68	1.68	1.68	1.68	XXX
93744	TC	A	Analyze ht pace device dual	0.00	0.66	0.66	NA	NA	0.03	0.69	0.69	NA	NA	XXX
93760		N	Cephalic thermogram	0.00	0.00	0.00	0.00	0.00	0.00	0.00	0.00	0.00	0.00	XXX
93762		N	Peripheral thermogram	0.00	0.00	0.00	0.00	0.00	0.00	0.00	0.00	0.00	0.00	XXX

[1] CPT codes and descriptions only are copyright 2000 American Medical Association. All Rights Reserved. Applicable FARS/DFARS Apply.
[2] Copyright 1994 American Dental Association. All rights reserved.
[3] + Indicates RVUs are not used for Medicare payment.
[4] PE RVUs = Practice Expense Relative Value Units.

ADDENDUM B.—RELATIVE VALUE UNITS (RVU'S) AND RELATED INFORMATION—Continued

CPT[1]/ HCPCS[2]	MOD	Status	Description	Physician Work RVUs[3]	Fully Implemented Non-Facility PE RVUs	Year 2001 Transitional Non-Facility PE RVUs	Fully Implemented Facility PE RVUs	Year 2001 Transitional Facility PE RVUs	Mal-Practice RVUs	Fully Implemented Non-Facility Total	Year 2001 Transitional Non-Facility Total	Fully Implemented Facility Total	Year 2001 Transitional Facility Total	Global
93770		B	Measure venous pressure	+0.16	0.09	0.12	0.09	0.12	0.02	0.27	0.30	0.27	0.30	XXX
93770	26	B	Measure venous pressure	+0.16	0.06	0.09	0.06	0.09	0.01	0.23	0.26	0.23	0.26	XXX
93770	TC	B	Measure venous pressure	+0.00	0.03	0.03	NA	NA	0.01	0.04	0.04	NA	NA	XXX
93784		N	Ambulatory BP monitoring	0.00	0.00	0.00	0.00	0.00	0.00	0.00	0.00	0.00	0.00	XXX
93786		N	Ambulatory BP recording	0.00	0.00	0.00	0.00	0.00	0.00	0.00	0.00	0.00	0.00	XXX
93788		N	Ambulatory BP analysis	0.00	0.00	0.00	0.00	0.00	0.00	0.00	0.00	0.00	0.00	XXX
93790		N	Review/report BP recording	0.00	0.00	0.00	0.00	0.00	0.00	0.00	0.00	0.00	0.00	XXX
93797		A	Cardiac rehab	0.18	0.40	0.36	0.07	0.08	0.01	0.59	0.55	0.26	0.27	000
93798		A	Cardiac rehab/monitor	0.28	0.47	0.48	0.12	0.16	0.01	0.76	0.77	0.41	0.45	000
93799		C	Cardiovascular procedure	0.00	0.00	0.00	0.00	0.00	0.00	0.00	0.00	0.00	0.00	XXX
93799	26	C	Cardiovascular procedure	0.00	0.00	0.00	0.00	0.00	0.00	0.00	0.00	0.00	0.00	XXX
93799	TC	C	Cardiovascular procedure	0.00	0.00	0.00	0.00	0.00	0.00	0.00	0.00	0.00	0.00	XXX
93875		A	Extracranial study	0.22	1.18	1.24	1.18	1.24	0.10	1.50	1.56	1.50	1.56	XXX
93875	26	A	Extracranial study	0.22	0.08	0.13	0.08	0.13	0.01	0.31	0.36	0.31	0.36	XXX
93875	TC	A	Extracranial study	0.00	1.10	1.11	NA	NA	0.09	1.19	1.20	NA	NA	XXX
93880		A	Extracranial study	0.60	3.92	4.01	3.92	4.01	0.33	4.85	4.94	4.85	4.94	XXX
93880	26	A	Extracranial study	0.60	0.22	0.27	0.22	0.27	0.04	0.86	0.91	0.86	0.91	XXX
93880	TC	A	Extracranial study	0.00	3.70	3.74	NA	NA	0.29	3.99	4.03	NA	NA	XXX
93882		A	Extracranial study	0.40	2.61	2.67	2.61	2.67	0.22	3.23	3.29	3.23	3.29	XXX
93882	26	A	Extracranial study	0.40	0.15	0.18	0.15	0.18	0.04	0.59	0.62	0.59	0.62	XXX
93882	TC	A	Extracranial study	0.00	2.46	2.49	NA	NA	0.18	2.64	2.67	NA	NA	XXX
93886		A	Intracranial study	0.94	4.58	4.64	4.58	4.64	0.37	5.89	5.95	5.89	5.95	XXX
93886	26	A	Intracranial study	0.94	0.39	0.41	0.39	0.41	0.05	1.38	1.40	1.38	1.40	XXX
93886	TC	A	Intracranial study	0.00	4.19	4.23	NA	NA	0.32	4.51	4.55	NA	NA	XXX
93888		A	Intracranial study	0.62	3.04	3.09	3.04	3.09	0.26	3.92	3.97	3.92	3.97	XXX
93888	26	A	Intracranial study	0.62	0.24	0.26	0.24	0.26	0.04	0.90	0.92	0.90	0.92	XXX
93888	TC	A	Intracranial study	0.00	2.80	2.83	NA	NA	0.22	3.02	3.05	NA	NA	XXX
93922		A	Extremity study	0.25	1.23	1.29	1.23	1.29	0.13	1.61	1.67	1.61	1.67	XXX
93922	26	A	Extremity study	0.25	0.09	0.14	0.09	0.14	0.02	0.36	0.41	0.36	0.41	XXX
93922	TC	A	Extremity study	0.00	1.14	1.15	NA	NA	0.11	1.25	1.26	NA	NA	XXX
93923		A	Extremity study	0.45	2.34	2.45	2.34	2.45	0.22	3.01	3.12	3.01	3.12	XXX
93923	26	A	Extremity study	0.45	0.17	0.26	0.17	0.26	0.04	0.66	0.75	0.66	0.75	XXX
93923	TC	A	Extremity study	0.00	2.17	2.19	NA	NA	0.18	2.35	2.37	NA	NA	XXX
93924		A	Extremity study	0.50	2.54	2.67	2.54	2.67	0.26	3.30	3.43	3.30	3.43	XXX
93924	26	A	Extremity study	0.50	0.19	0.29	0.19	0.29	0.05	0.74	0.84	0.74	0.84	XXX
93924	TC	A	Extremity study	0.00	2.35	2.38	NA	NA	0.21	2.56	2.59	NA	NA	XXX
93925		A	Lower extremity study	0.58	3.93	4.02	3.93	4.02	0.33	4.84	4.93	4.84	4.93	XXX
93925	26	A	Lower extremity study	0.58	0.21	0.26	0.21	0.26	0.04	0.83	0.88	0.83	0.88	XXX
93925	TC	A	Lower extremity study	0.00	3.72	3.76	NA	NA	0.29	4.01	4.05	NA	NA	XXX
93926		A	Lower extremity study	0.39	2.62	2.69	2.62	2.69	0.22	3.23	3.30	3.23	3.30	XXX
93926	26	A	Lower extremity study	0.39	0.14	0.18	0.14	0.18	0.03	0.56	0.60	0.56	0.60	XXX
93926	TC	A	Lower extremity study	0.00	2.48	2.51	NA	NA	0.19	2.67	2.70	NA	NA	XXX
93930		A	Upper extremity study	0.46	4.12	4.22	4.12	4.22	0.34	4.92	5.02	4.92	5.02	XXX
93930	26	A	Upper extremity study	0.46	0.17	0.23	0.17	0.23	0.03	0.66	0.72	0.66	0.72	XXX
93930	TC	A	Upper extremity study	0.00	3.95	3.99	NA	NA	0.31	4.26	4.30	NA	NA	XXX
93931		A	Upper extremity study	0.31	2.73	2.80	2.73	2.80	0.22	3.26	3.33	3.26	3.33	XXX
93931	26	A	Upper extremity study	0.31	0.11	0.15	0.11	0.15	0.02	0.44	0.48	0.44	0.48	XXX
93931	TC	A	Upper extremity study	0.00	2.62	2.65	NA	NA	0.20	2.82	2.85	NA	NA	XXX
93965		A	Extremity study	0.35	1.22	1.30	1.22	1.30	0.12	1.69	1.77	1.69	1.77	XXX
93965	26	A	Extremity study	0.35	0.13	0.20	0.13	0.20	0.02	0.50	0.57	0.50	0.57	XXX
93965	TC	A	Extremity study	0.00	1.09	1.10	NA	NA	0.10	1.19	1.20	NA	NA	XXX
93970		A	Extremity study	0.68	4.35	4.44	4.35	4.44	0.38	5.41	5.50	5.41	5.50	XXX
93970	26	A	Extremity study	0.68	0.25	0.30	0.25	0.30	0.05	0.98	1.03	0.98	1.03	XXX
93970	TC	A	Extremity study	0.00	4.10	4.14	NA	NA	0.33	4.43	4.47	NA	NA	XXX
93971		A	Extremity study	0.45	2.89	2.95	2.89	2.95	0.25	3.59	3.65	3.59	3.65	XXX
93971	26	A	Extremity study	0.45	0.16	0.19	0.16	0.19	0.03	0.64	0.67	0.64	0.67	XXX
93971	TC	A	Extremity study	0.00	2.73	2.76	NA	NA	0.22	2.95	2.98	NA	NA	XXX
93975		A	Vascular study	1.80	5.32	5.32	5.32	5.32	0.47	7.59	7.59	7.59	7.59	XXX
93975	26	A	Vascular study	1.80	0.65	0.60	0.65	0.60	0.11	2.56	2.51	2.56	2.51	XXX
93975	TC	A	Vascular study	0.00	4.67	4.72	NA	NA	0.36	5.03	5.08	NA	NA	XXX
93976		A	Vascular study	1.21	3.54	3.54	3.54	3.54	0.31	5.06	5.06	5.06	5.06	XXX
93976	26	A	Vascular study	1.21	0.43	0.40	0.43	0.40	0.06	1.70	1.67	1.70	1.67	XXX
93976	TC	A	Vascular study	0.00	3.11	3.14	NA	NA	0.25	3.36	3.39	NA	NA	XXX
93978		A	Vascular study	0.65	4.06	4.15	4.06	4.15	0.36	5.07	5.16	5.07	5.16	XXX
93978	26	A	Vascular study	0.65	0.24	0.29	0.24	0.29	0.05	0.94	0.99	0.94	0.99	XXX
93978	TC	A	Vascular study	0.00	3.82	3.86	NA	NA	0.31	4.13	4.17	NA	NA	XXX
93979		A	Vascular study	0.44	2.71	2.77	2.71	2.77	0.24	3.39	3.45	3.39	3.45	XXX
93979	26	A	Vascular study	0.44	0.16	0.19	0.16	0.19	0.04	0.64	0.67	0.64	0.67	XXX
93979	TC	A	Vascular study	0.00	2.55	2.58	NA	NA	0.20	2.75	2.78	NA	NA	XXX
93980		A	Penile vascular study	1.25	3.92	4.07	3.92	4.07	0.35	5.52	5.67	5.52	5.67	XXX
93980	26	A	Penile vascular study	1.25	0.45	0.56	0.45	0.56	0.07	1.77	1.88	1.77	1.88	XXX
93980	TC	A	Penile vascular study	0.00	3.47	3.51	NA	NA	0.28	3.75	3.79	NA	NA	XXX
93981		A	Penile vascular study	0.44	3.36	3.46	3.36	3.46	0.28	4.08	4.18	4.08	4.18	XXX
93981	26	A	Penile vascular study	0.44	0.16	0.23	0.16	0.23	0.02	0.62	0.69	0.62	0.69	XXX
93981	TC	A	Penile vascular study	0.00	3.20	3.23	NA	NA	0.26	3.46	3.49	NA	NA	XXX
93990		A	Doppler flow testing	0.25	2.58	2.64	2.58	2.64	0.21	3.04	3.10	3.04	3.10	XXX
93990	26	A	Doppler flow testing	0.25	0.10	0.13	0.10	0.13	0.02	0.37	0.40	0.37	0.40	XXX
93990	TC	A	Doppler flow testing	0.00	2.48	2.51	NA	NA	0.19	2.67	2.70	NA	NA	XXX
94010		A	Breathing capacity test	0.17	0.79	0.77	0.79	0.77	0.03	0.99	0.97	0.99	0.97	XXX
94010	26	A	Breathing capacity test	0.17	0.05	0.11	0.05	0.11	0.01	0.23	0.29	0.23	0.29	XXX
94010	TC	A	Breathing capacity test	0.00	0.74	0.66	NA	NA	0.02	0.76	0.68	NA	NA	XXX
94014		A	Patient recorded spirometry	0.52	0.51	0.51	NA	NA	0.03	1.06	1.06	NA	NA	XXX
94015		A	Patient recorded spirometry	0.00	0.34	0.34	NA	NA	0.01	0.35	0.35	NA	NA	XXX

[1] CPT codes and descriptions only are copyright 2000 American Medical Association. All Rights Reserved. Applicable FARS/DFARS Apply.
[2] Copyright 1994 American Dental Association. All rights reserved.
[3] + Indicates RVUs are not used for Medicare payment.
[4] PE RVUs = Practice Expense Relative Value Units.

ADDENDUM B.—RELATIVE VALUE UNITS (RVU'S) AND RELATED INFORMATION—Continued

CPT[1]/ HCPCS[2]	MOD	Status	Description	Physician Work RVUs[3]	Fully Implemented Non-Facility PE RVUs	Year 2001 Transitional Non-Facility PE RVUs	Fully Implemented Facility PE RVUs	Year 2001 Transitional Facility PE RVUs	Mal-Practice RVUs	Fully Implemented Non-Facility Total	Year 2001 Transitional Non-Facility Total	Fully Implemented Facility Total	Year 2001 Transitional Facility Total	Global
94016		A	Review patient spirometry	0.52	0.17	0.17	0.17	0.17	0.02	0.71	0.71	0.71	0.71	XXX
94060		A	Evaluation of wheezing	0.31	1.18	1.22	1.18	1.22	0.06	1.55	1.59	1.55	1.59	XXX
94060	26	A	Evaluation of wheezing	0.31	0.10	0.17	0.10	0.17	0.01	0.42	0.49	0.42	0.49	XXX
94060	TC	A	Evaluation of wheezing	0.00	1.08	1.05	NA	NA	0.05	1.13	1.10	NA	NA	XXX
94070		A	Evaluation of wheezing	0.60	3.75	3.30	3.75	3.30	0.10	4.45	4.00	4.45	4.00	XXX
94070	26	A	Evaluation of wheezing	0.60	0.18	0.24	0.18	0.24	0.02	0.80	0.86	0.80	0.86	XXX
94070	TC	A	Evaluation of wheezing	0.00	3.57	3.06	NA	NA	0.08	3.65	3.14	NA	NA	XXX
94150		B	Vital capacity test	+0.07	0.61	0.51	0.61	0.51	0.02	0.70	0.60	0.70	0.60	XXX
94150	26	B	Vital capacity test	+0.07	0.03	0.05	0.03	0.05	0.01	0.11	0.13	0.11	0.13	XXX
94150	TC	B	Vital capacity test	+0.00	0.58	0.46	NA	NA	0.01	0.59	0.47	NA	NA	XXX
94200		A	Lung function test (MBC/MVV)	0.11	0.31	0.34	0.31	0.34	0.03	0.45	0.48	0.45	0.48	XXX
94200	26	A	Lung function test (MBC/MVV)	0.11	0.03	0.06	0.03	0.06	0.01	0.15	0.18	0.15	0.18	XXX
94200	TC	A	Lung function test (MBC/MVV)	0.00	0.28	0.28	NA	NA	0.02	0.30	0.30	NA	NA	XXX
94240		A	Residual lung capacity	0.26	1.37	1.27	1.37	1.27	0.05	1.68	1.58	1.68	1.58	XXX
94240	26	A	Residual lung capacity	0.26	0.08	0.12	0.08	0.12	0.01	0.35	0.39	0.35	0.39	XXX
94240	TC	A	Residual lung capacity	0.00	1.29	1.15	NA	NA	0.04	1.33	1.19	NA	NA	XXX
94250		A	Expired gas collection	0.11	0.63	0.55	0.63	0.55	0.02	0.76	0.68	0.76	0.68	XXX
94250	26	A	Expired gas collection	0.11	0.03	0.06	0.03	0.06	0.01	0.15	0.18	0.15	0.18	XXX
94250	TC	A	Expired gas collection	0.00	0.60	0.49	NA	NA	0.01	0.61	0.50	NA	NA	XXX
94260		A	Thoracic gas volume	0.13	0.39	0.47	0.39	0.47	0.04	0.56	0.64	0.56	0.64	XXX
94260	26	A	Thoracic gas volume	0.13	0.04	0.07	0.04	0.07	0.01	0.18	0.21	0.18	0.21	XXX
94260	TC	A	Thoracic gas volume	0.00	0.35	0.40	NA	NA	0.03	0.38	0.43	NA	NA	XXX
94350		A	Lung nitrogen washout curve	0.26	1.17	1.08	1.17	1.08	0.04	1.47	1.38	1.47	1.38	XXX
94350	26	A	Lung nitrogen washout curve	0.26	0.08	0.12	0.08	0.12	0.01	0.35	0.39	0.35	0.39	XXX
94350	TC	A	Lung nitrogen washout curve	0.00	1.09	0.96	NA	NA	0.03	1.12	0.99	NA	NA	XXX
94360		A	Measure airflow resistance	0.26	0.64	0.78	0.64	0.78	0.06	0.96	1.10	0.96	1.10	XXX
94360	26	A	Measure airflow resistance	0.26	0.08	0.11	0.08	0.11	0.01	0.35	0.38	0.35	0.38	XXX
94360	TC	A	Measure airflow resistance	0.00	0.56	0.67	NA	NA	0.05	0.61	0.72	NA	NA	XXX
94370		A	Breath airway closing volume	0.26	2.48	1.97	2.48	1.97	0.03	2.77	2.26	2.77	2.26	XXX
94370	26	A	Breath airway closing volume	0.26	0.08	0.10	0.08	0.10	0.01	0.35	0.37	0.35	0.37	XXX
94370	TC	A	Breath airway closing volume	0.00	2.40	1.87	NA	NA	0.02	2.42	1.89	NA	NA	XXX
94375		A	Respiratory flow volume loop	0.31	0.45	0.53	0.45	0.53	0.03	0.79	0.87	0.79	0.87	XXX
94375	26	A	Respiratory flow volume loop	0.31	0.09	0.13	0.09	0.13	0.01	0.41	0.45	0.41	0.45	XXX
94375	TC	A	Respiratory flow volume loop	0.00	0.36	0.40	NA	NA	0.02	0.38	0.42	NA	NA	XXX
94400		A	CO2 breathing response curve	0.40	0.84	0.85	0.84	0.85	0.06	1.30	1.31	1.30	1.31	XXX
94400	26	A	CO2 breathing response curve	0.40	0.13	0.23	0.13	0.23	0.01	0.54	0.64	0.54	0.64	XXX
94400	TC	A	CO2 breathing response curve	0.00	0.71	0.62	NA	NA	0.05	0.76	0.67	NA	NA	XXX
94450		A	Hypoxia response curve	0.40	0.81	0.77	0.81	0.77	0.04	1.25	1.21	1.25	1.21	XXX
94450	26	A	Hypoxia response curve	0.40	0.10	0.14	0.10	0.14	0.02	0.52	0.56	0.52	0.56	XXX
94450	TC	A	Hypoxia response curve	0.00	0.71	0.63	NA	NA	0.02	0.73	0.65	NA	NA	XXX
94620		A	Pulmonary stress test/simple	0.64	2.29	2.28	2.29	2.28	0.10	3.03	3.02	3.03	3.02	XXX
94620	26	A	Pulmonary stress test/simple	0.64	0.20	0.34	0.20	0.34	0.02	0.86	1.00	0.86	1.00	XXX
94620	TC	A	Pulmonary stress test/simple	0.00	2.09	1.94	NA	NA	0.08	2.17	2.02	NA	NA	XXX
94621		A	Pulm stress test/complex	1.42	2.12	2.15	2.12	2.15	0.13	3.67	3.70	3.67	3.70	XXX
94621	26	A	Pulm stress test/complex	1.42	0.44	0.52	0.44	0.52	0.05	1.91	1.99	1.91	1.99	XXX
94621	TC	A	Pulm stress test/complex	0.00	1.68	1.63	NA	NA	0.08	1.76	1.71	NA	NA	XXX
94640		A	Airway inhalation treatment	0.00	0.67	0.61	0.22	0.27	0.02	0.69	0.63	0.24	0.29	XXX
94642		C	Aerosol inhalation treatment	0.00	0.00	0.00	0.00	0.00	0.00	0.00	0.00	0.00	0.00	XXX
94650		A	Pressure breathing (IPPB)	0.00	0.64	0.58	0.20	0.25	0.02	0.66	0.60	0.22	0.27	XXX
94651		A	Pressure breathing (IPPB)	0.00	0.59	0.54	0.19	0.24	0.02	0.61	0.56	0.21	0.26	XXX
94652		A	Pressure breathing (IPPB)	0.00	0.72	0.65	0.22	0.28	0.06	0.78	0.71	0.28	0.34	XXX
94656		A	Initial ventilator mgmt	1.22	NA	NA	0.32	0.55	0.06	NA	NA	1.60	1.83	XXX
94657		A	Continued ventilator mgmt	0.83	NA	NA	0.25	0.36	0.03	NA	NA	1.11	1.22	XXX
94660		A	Pos airway pressure, CPAP	0.76	0.66	0.69	0.23	0.37	0.03	1.45	1.48	1.02	1.16	XXX
94662		A	Neg press ventilation, cnp	0.76	NA	NA	0.24	0.26	0.02	NA	NA	1.02	1.04	XXX
94664		A	Aerosol or vapor inhalations	0.00	0.50	0.51	0.16	0.26	0.03	0.53	0.54	0.19	0.29	XXX
94665		A	Aerosol or vapor inhalations	0.00	0.51	0.51	0.16	0.25	0.04	0.55	0.55	0.20	0.29	XXX
94667		A	Chest wall manipulation	0.00	0.81	0.76	0.26	0.35	0.04	0.85	0.80	0.30	0.39	XXX
94668		A	Chest wall manipulation	0.00	0.69	0.61	0.22	0.26	0.02	0.71	0.63	0.24	0.28	XXX
94680		A	Exhaled air analysis, o2	0.26	0.81	0.82	0.81	0.82	0.06	1.13	1.14	1.13	1.14	XXX
94680	26	A	Exhaled air analysis, o2	0.26	0.09	0.15	0.09	0.15	0.01	0.36	0.42	0.36	0.42	XXX
94680	TC	A	Exhaled air analysis, o2	0.00	0.72	0.67	NA	NA	0.05	0.77	0.72	NA	NA	XXX
94681		A	Exhaled air analysis, o2/co2	0.20	1.71	1.70	1.71	1.70	0.11	2.02	2.01	2.02	2.01	XXX
94681	26	A	Exhaled air analysis, o2/co2	0.20	0.07	0.11	0.07	0.11	0.01	0.28	0.32	0.28	0.32	XXX
94681	TC	A	Exhaled air analysis, o2/co2	0.00	1.64	1.59	NA	NA	0.10	1.74	1.69	NA	NA	XXX
94690		A	Exhaled air analysis	0.07	0.56	0.57	0.56	0.57	0.04	0.67	0.68	0.67	0.68	XXX
94690	26	A	Exhaled air analysis	0.07	0.02	0.03	0.02	0.03	0.01	0.10	0.11	0.10	0.11	XXX
94690	TC	A	Exhaled air analysis	0.00	0.54	0.54	NA	NA	0.03	0.57	0.57	NA	NA	XXX
94720		A	Monoxide diffusing capacity	0.26	1.39	1.32	1.39	1.32	0.06	1.71	1.64	1.71	1.64	XXX
94720	26	A	Monoxide diffusing capacity	0.26	0.08	0.12	0.08	0.12	0.01	0.35	0.39	0.35	0.39	XXX
94720	TC	A	Monoxide diffusing capacity	0.00	1.31	1.20	NA	NA	0.05	1.36	1.25	NA	NA	XXX
94725		A	Membrane diffusion capacity	0.26	0.82	1.12	0.82	1.12	0.11	1.19	1.49	1.19	1.49	XXX
94725	26	A	Membrane diffusion capacity	0.26	0.08	0.11	0.08	0.11	0.01	0.35	0.38	0.35	0.38	XXX
94725	TC	A	Membrane diffusion capacity	0.00	0.74	1.01	NA	NA	0.10	0.84	1.11	NA	NA	XXX
94750		A	Pulmonary compliance study	0.23	3.58	2.90	3.58	2.90	0.04	3.85	3.17	3.85	3.17	XXX
94750	26	A	Pulmonary compliance study	0.23	0.07	0.12	0.07	0.12	0.01	0.31	0.36	0.31	0.36	XXX
94750	TC	A	Pulmonary compliance study	0.00	3.51	2.78	NA	NA	0.03	3.54	2.81	NA	NA	XXX
94760		T	Measure blood oxygen level	0.00	0.09	0.14	NA	NA	0.02	0.11	0.16	NA	NA	XXX
94761		T	Measure blood oxygen level	0.00	0.17	0.30	NA	NA	0.05	0.22	0.35	NA	NA	XXX
94762		A	Measure blood oxygen level	0.00	0.11	0.38	NA	NA	0.08	0.19	0.46	NA	NA	XXX
94770		A	Exhaled carbon dioxide test	0.15	0.76	0.68	0.76	0.68	0.07	0.98	0.90	0.98	0.90	XXX
94770	26	A	Exhaled carbon dioxide test	0.15	0.04	0.06	0.04	0.06	0.01	0.20	0.22	0.20	0.22	XXX
94770	TC	A	Exhaled carbon dioxide test	0.00	0.72	0.62	NA	NA	0.06	0.78	0.68	NA	NA	XXX

[1] CPT codes and descriptions only are copyright 2000 American Medical Association. All Rights Reserved. Applicable FARS/DFARS Apply.
[2] Copyright 1994 American Dental Association. All rights reserved.
[3] + Indicates RVUs are not used for Medicare payment.
[4] PE RVUs = Practice Expense Relative Value Units.

ADDENDUM B.—RELATIVE VALUE UNITS (RVU'S) AND RELATED INFORMATION—Continued

CPT[1]/ HCPCS[2]	MOD	Status	Description	Physician Work RVUs[3]	Fully Implemented Non-Facility PE RVUs	Year 2001 Transitional Non-Facility PE RVUs	Fully Implemented Facility PE RVUs	Year 2001 Transitional Facility PE RVUs	Mal-Practice RVUs	Fully Implemented Non-Facility Total	Year 2001 Transitional Non-Facility Total	Fully Implemented Facility Total	Year 2001 Transitional Facility Total	Global
94772		C	Breath recording, infant	0.00	0.00	0.00	0.00	0.00	0.00	0.00	0.00	0.00	0.00	XXX
94772	26	C	Breath recording, infant	0.00	0.00	0.00	0.00	0.00	0.00	0.00	0.00	0.00	0.00	XXX
94772	TC	C	Breath recording, infant	0.00	0.00	0.00	0.00	0.00	0.00	0.00	0.00	0.00	0.00	XXX
94799		C	Pulmonary service/procedure	0.00	0.00	0.00	0.00	0.00	0.00	0.00	0.00	0.00	0.00	XXX
94799	26	C	Pulmonary service/procedure	0.00	0.00	0.00	0.00	0.00	0.00	0.00	0.00	0.00	0.00	XXX
94799	TC	C	Pulmonary service/procedure	0.00	0.00	0.00	0.00	0.00	0.00	0.00	0.00	0.00	0.00	XXX
95004		A	Allergy skin tests	0.00	0.10	0.10	0.10	0.10	0.01	0.11	0.11	0.11	0.11	XXX
95010		A	Sensitivity skin tests	0.15	0.45	0.37	0.07	0.07	0.01	0.61	0.53	0.23	0.23	XXX
95015		A	Sensitivity skin tests	0.15	0.49	0.40	0.07	0.07	0.01	0.65	0.56	0.23	0.23	XXX
95024		A	Allergy skin tests	0.00	0.14	0.14	0.14	0.14	0.01	0.15	0.15	0.15	0.15	XXX
95027		A	Skin end point titration	0.00	0.14	0.14	NA	NA	0.01	0.15	0.15	NA	NA	XXX
95028		A	Allergy skin tests	0.00	0.23	0.23	NA	NA	0.01	0.24	0.24	NA	NA	XXX
95044		A	Allergy patch tests	0.00	0.20	0.20	0.20	0.20	0.01	0.21	0.21	0.21	0.21	XXX
95052		A	Photo patch test	0.00	0.25	0.25	0.25	0.25	0.01	0.26	0.26	0.26	0.26	XXX
95056		A	Photosensitivity tests	0.00	0.17	0.17	0.17	0.15	0.01	0.18	0.18	0.18	0.16	XXX
95060		A	Eye allergy tests	0.00	0.35	0.35	NA	NA	0.02	0.37	0.37	NA	NA	XXX
95065		A	Nose allergy test	0.00	0.20	0.20	NA	NA	0.01	0.21	0.21	NA	NA	XXX
95070		A	Bronchial allergy tests	0.00	2.27	2.29	NA	NA	0.02	2.29	2.31	NA	NA	XXX
95071		A	Bronchial allergy tests	0.00	2.90	2.93	NA	NA	0.02	2.92	2.95	NA	NA	XXX
95075		A	Ingestion challenge test	0.95	0.89	1.20	0.43	0.59	0.03	1.87	2.18	1.41	1.57	XXX
95078		A	Provocative testing	0.00	0.25	0.25	NA	NA	0.02	0.27	0.27	NA	NA	XXX
95115		A	Immunotherapy, one injection	0.00	0.38	0.39	0.38	0.39	0.02	0.40	0.41	0.40	0.41	000
95117		A	Immunotherapy injections	0.00	0.50	0.51	0.50	0.51	0.02	0.52	0.53	0.52	0.53	000
95120		I	Immunotherapy, one injection	0.00	0.00	0.00	0.00	0.00	0.00	0.00	0.00	0.00	0.00	XXX
95125		I	Immunotherapy, many antigens	0.00	0.00	0.00	0.00	0.00	0.00	0.00	0.00	0.00	0.00	XXX
95130		I	Immunotherapy, insect venom	0.00	0.00	0.00	0.00	0.00	0.00	0.00	0.00	0.00	0.00	XXX
95131		I	Immunotherapy, insect venoms	0.00	0.00	0.00	0.00	0.00	0.00	0.00	0.00	0.00	0.00	XXX
95132		I	Immunotherapy, insect venoms	0.00	0.00	0.00	0.00	0.00	0.00	0.00	0.00	0.00	0.00	XXX
95133		I	Immunotherapy, insect venoms	0.00	0.00	0.00	0.00	0.00	0.00	0.00	0.00	0.00	0.00	XXX
95134		I	Immunotherapy, insect venoms	0.00	0.00	0.00	0.00	0.00	0.00	0.00	0.00	0.00	0.00	XXX
95144		A	Antigen therapy services	0.06	0.25	0.22	0.03	0.04	0.01	0.32	0.29	0.10	0.11	000
95145		A	Antigen therapy services	0.06	0.50	0.47	0.03	0.07	0.01	0.57	0.54	0.10	0.14	000
95146		A	Antigen therapy services	0.06	0.60	0.62	0.02	0.10	0.01	0.67	0.69	0.09	0.17	000
95147		A	Antigen therapy services	0.06	0.86	0.89	0.02	0.14	0.01	0.93	0.96	0.09	0.21	000
95148		A	Antigen therapy services	0.06	0.83	0.87	0.03	0.15	0.01	0.90	0.94	0.10	0.22	000
95149		A	Antigen therapy services	0.06	1.03	1.08	0.02	0.17	0.01	1.10	1.15	0.09	0.24	000
95165		A	Antigen therapy services	0.06	0.20	0.18	0.02	0.03	0.01	0.27	0.25	0.09	0.10	000
95170		A	Antigen therapy services	0.06	0.27	0.30	0.02	0.06	0.01	0.34	0.37	0.09	0.13	000
95180		A	Rapid desensitization	2.01	1.71	1.32	0.86	0.67	0.04	3.76	3.37	2.91	2.72	000
95199		C	Allergy immunology services	0.00	0.00	0.00	0.00	0.00	0.00	0.00	0.00	0.00	0.00	000
95805		A	Multiple sleep latency test	1.88	7.66	7.25	7.66	7.25	0.34	9.88	9.47	9.88	9.47	XXX
95805	26	A	Multiple sleep latency test	1.88	0.67	0.66	0.67	0.66	0.06	2.61	2.60	2.61	2.60	XXX
95805	TC	A	Multiple sleep latency test	0.00	6.99	6.59	NA	NA	0.28	7.27	6.87	NA	NA	XXX
95806		A	Sleep study, unattended	1.66	1.73	3.25	1.73	3.08	0.32	3.71	5.23	3.71	5.06	XXX
95806	26	A	Sleep study, unattended	1.66	0.54	1.07	0.54	0.90	0.06	2.26	2.79	2.26	2.62	XXX
95806	TC	A	Sleep study, unattended	0.00	1.19	2.18	NA	NA	0.26	1.45	2.44	NA	NA	XXX
95807		A	Sleep study, attended	1.66	10.83	10.34	10.83	10.34	0.40	12.89	12.40	12.89	12.40	XXX
95807	26	A	Sleep study, attended	1.66	0.53	0.90	0.53	0.90	0.05	2.24	2.61	2.24	2.61	XXX
95807	TC	A	Sleep study, attended	0.00	10.30	9.44	NA	NA	0.35	10.65	9.79	NA	NA	XXX
95808		A	Polysomnography, 1-3	2.65	17.52	15.51	17.52	15.51	0.44	20.61	18.60	20.61	18.60	XXX
95808	26	A	Polysomnography, 1-3	2.65	0.93	1.36	0.93	1.36	0.09	3.67	4.10	3.67	4.10	XXX
95808	TC	A	Polysomnography, 1-3	0.00	16.59	14.15	NA	NA	0.35	16.94	14.50	NA	NA	XXX
95810		A	Polysomnography, 4 or more	3.53	15.27	13.83	15.27	13.83	0.47	19.27	17.83	19.27	17.83	XXX
95810	26	A	Polysomnography, 4 or more	3.53	1.20	1.57	1.20	1.57	0.12	4.85	5.22	4.85	5.22	XXX
95810	TC	A	Polysomnography, 4 or more	0.00	14.07	12.26	NA	NA	0.35	14.42	12.61	NA	NA	XXX
95811		A	Polysomnography w/cpap	3.80	14.06	13.04	14.06	13.04	0.49	18.35	17.33	18.35	17.33	XXX
95811	26	A	Polysomnography w/cpap	3.80	1.28	1.66	1.28	1.66	0.13	5.21	5.59	5.21	5.59	XXX
95811	TC	A	Polysomnography w/cpap	0.00	12.78	11.38	NA	NA	0.36	13.14	11.74	NA	NA	XXX
95812		A	Electroencephalogram (EEG)	1.08	3.39	3.05	3.39	3.05	0.13	4.60	4.26	4.60	4.26	XXX
95812	26	A	Electroencephalogram (EEG)	1.08	0.46	0.48	0.46	0.48	0.04	1.58	1.60	1.58	1.60	XXX
95812	TC	A	Electroencephalogram (EEG)	0.00	2.93	2.57	NA	NA	0.09	3.02	2.66	NA	NA	XXX
95813		A	Electroencephalogram (EEG)	1.73	4.59	3.95	4.59	3.95	0.15	6.47	5.83	6.47	5.83	XXX
95813	26	A	Electroencephalogram (EEG)	1.73	0.71	0.67	0.71	0.67	0.06	2.50	2.46	2.50	2.46	XXX
95813	TC	A	Electroencephalogram (EEG)	0.00	3.88	3.28	NA	NA	0.09	3.97	3.37	NA	NA	XXX
95816		A	Electroencephalogram (EEG)	1.08	3.15	2.78	3.15	2.78	0.12	4.35	3.98	4.35	3.98	XXX
95816	26	A	Electroencephalogram (EEG)	1.08	0.47	0.43	0.47	0.43	0.04	1.59	1.55	1.59	1.55	XXX
95816	TC	A	Electroencephalogram (EEG)	0.00	2.68	2.35	NA	NA	0.08	2.76	2.43	NA	NA	XXX
95819		A	Electroencephalogram (EEG)	1.08	3.63	3.21	3.63	3.21	0.12	4.83	4.41	4.83	4.41	XXX
95819	26	A	Electroencephalogram (EEG)	1.08	0.47	0.49	0.47	0.49	0.04	1.59	1.61	1.59	1.61	XXX
95819	TC	A	Electroencephalogram (EEG)	0.00	3.16	2.72	NA	NA	0.08	3.24	2.80	NA	NA	XXX
95822		A	Sleep electroencephalogram	1.08	2.44	2.46	2.44	2.46	0.15	3.67	3.69	3.67	3.69	XXX
95822	26	A	Sleep electroencephalogram	1.08	0.47	0.51	0.47	0.51	0.04	1.59	1.63	1.59	1.63	XXX
95822	TC	A	Sleep electroencephalogram	0.00	1.97	1.95	NA	NA	0.11	2.08	2.06	NA	NA	XXX
95824		A	Electroencephalography	0.74	0.71	0.80	0.71	0.80	0.05	1.50	1.59	1.50	1.59	XXX
95824	26	H	Electroencephalography	0.00	0.00	0.00	0.00	0.00	0.00	0.00	0.00	0.00	0.00	XXX
95824	TC	H	Electroencephalography	0.00	0.00	0.00	NA	NA	0.00	0.00	0.00	NA	NA	XXX
95827		A	Night electroencephalogram	1.08	2.70	2.86	2.70	2.86	0.15	3.93	4.09	3.93	4.09	XXX
95827	26	A	Night electroencephalogram	1.08	0.42	0.56	0.42	0.56	0.03	1.53	1.67	1.53	1.67	XXX
95827	TC	A	Night electroencephalogram	0.00	2.28	2.30	NA	NA	0.12	2.40	2.42	NA	NA	XXX
95829		A	Surgery electrocorticogram	6.21	28.41	21.47	28.41	21.47	0.33	34.95	28.01	34.95	28.01	XXX
95829	26	A	Surgery electrocorticogram	6.21	2.01	1.63	2.01	1.63	0.31	8.53	8.15	8.53	8.15	XXX
95829	TC	A	Surgery electrocorticogram	0.00	26.40	19.84	NA	NA	0.02	26.42	19.86	NA	NA	XXX
95830		A	Insert electrodes for EEG	1.70	3.25	2.65	0.75	0.78	0.07	5.02	4.42	2.52	2.55	XXX

[1] CPT codes and descriptions only are copyright 2000 American Medical Association. All Rights Reserved. Applicable FARS/DFARS Apply.
[2] Copyright 1994 American Dental Association. All rights reserved.
[3] + Indicates RVUs are not used for Medicare payment.
[4] PE RVUs = Practice Expense Relative Value Units.

ADDENDUM B.—RELATIVE VALUE UNITS (RVU'S) AND RELATED INFORMATION—Continued

CPT[1]/ HCPCS[2]	MOD	Status	Description	Physician Work RVUs[3]	Fully Implemented Non-Facility PE RVUs	Year 2001 Transitional Non-Facility PE RVUs	Fully Implemented Facility PE RVUs	Year 2001 Transitional Facility PE RVUs	Mal-Practice RVUs	Fully Implemented Non-Facility Total	Year 2001 Transitional Non-Facility Total	Fully Implemented Facility Total	Year 2001 Transitional Facility Total	Global
95831	.....	A	Limb muscle testing, manual	0.28	0.47	0.43	0.13	0.14	0.01	0.76	0.72	0.42	0.43	XXX
95832	.....	A	Hand muscle testing, manual	0.29	0.43	0.39	0.11	0.12	0.01	0.73	0.69	0.41	0.42	XXX
95833	.....	A	Body muscle testing, manual	0.47	0.55	0.52	0.24	0.23	0.01	1.03	1.00	0.72	0.71	XXX
95834	.....	A	Body muscle testing, manual	0.60	0.62	0.63	0.29	0.30	0.02	1.24	1.25	0.91	0.92	XXX
95851	.....	A	Range of motion measurements	0.16	0.52	0.46	0.08	0.09	0.01	0.69	0.63	0.25	0.26	XXX
95852	.....	A	Range of motion measurements	0.11	0.42	0.36	0.05	0.06	0.01	0.54	0.48	0.17	0.18	XXX
95857	.....	A	Tensilon test	0.53	0.62	0.60	0.24	0.25	0.02	1.17	1.15	0.79	0.80	XXX
95858	.....	A	Tensilon test & myogram	1.56	1.10	1.11	1.10	1.11	0.07	2.73	2.74	2.73	2.74	XXX
95858	26	A	Tensilon test & myogram	1.56	0.71	0.71	0.71	0.71	0.04	2.31	2.31	2.31	2.31	XXX
95858	TC	A	Tensilon test & myogram	0.00	0.39	0.40	NA	NA	0.03	0.42	0.43	NA	NA	XXX
95860	.....	A	Muscle test, one limb	0.96	1.12	1.14	1.12	1.14	0.05	2.13	2.15	2.13	2.15	XXX
95860	26	A	Muscle test, one limb	0.96	0.44	0.53	0.44	0.53	0.03	1.43	1.52	1.43	1.52	XXX
95860	TC	A	Muscle test, one limb	0.00	0.68	0.61	NA	NA	0.02	0.70	0.63	NA	NA	XXX
95861	.....	A	Muscle test, two limbs	1.54	1.44	1.62	1.44	1.62	0.10	3.08	3.26	3.08	3.26	XXX
95861	26	A	Muscle test, two limbs	1.54	0.71	0.88	0.71	0.88	0.05	2.30	2.47	2.30	2.47	XXX
95861	TC	A	Muscle test, two limbs	0.00	0.73	0.74	NA	NA	0.05	0.78	0.79	NA	NA	XXX
95863	.....	A	Muscle test, 3 limbs	1.87	1.77	1.95	1.77	1.95	0.11	3.75	3.93	3.75	3.93	XXX
95863	26	A	Muscle test, 3 limbs	1.87	0.84	1.01	0.84	1.01	0.06	2.77	2.94	2.77	2.94	XXX
95863	TC	A	Muscle test, 3 limbs	0.00	0.93	0.94	NA	NA	0.05	0.98	0.99	NA	NA	XXX
95864	.....	A	Muscle test, 4 limbs	1.99	2.68	2.95	2.68	2.95	0.16	4.83	5.10	4.83	5.10	XXX
95864	26	A	Muscle test, 4 limbs	1.99	0.91	1.16	0.91	1.16	0.06	2.96	3.21	2.96	3.21	XXX
95864	TC	A	Muscle test, 4 limbs	0.00	1.77	1.79	NA	NA	0.10	1.87	1.89	NA	NA	XXX
95867	.....	A	Muscle test, head or neck	0.79	0.94	1.02	0.94	1.02	0.06	1.79	1.87	1.79	1.87	XXX
95867	26	A	Muscle test, head or neck	0.79	0.36	0.43	0.36	0.43	0.03	1.18	1.25	1.18	1.25	XXX
95867	TC	A	Muscle test, head or neck	0.00	0.58	0.59	NA	NA	0.03	0.61	0.62	NA	NA	XXX
95868	.....	A	Muscle test, head or neck	1.18	1.22	1.44	1.22	1.44	0.08	2.48	2.70	2.48	2.70	XXX
95868	26	A	Muscle test, head or neck	1.18	0.53	0.74	0.53	0.74	0.04	1.75	1.96	1.75	1.96	XXX
95868	TC	A	Muscle test, head or neck	0.00	0.69	0.70	NA	NA	0.04	0.73	0.74	NA	NA	XXX
95869	.....	A	Muscle test, thor paraspinal	0.37	0.38	0.43	0.38	0.43	0.03	0.78	0.83	0.78	0.83	XXX
95869	26	A	Muscle test, thor paraspinal	0.37	0.17	0.22	0.17	0.22	0.01	0.55	0.60	0.55	0.60	XXX
95869	TC	A	Muscle test, thor paraspinal	0.00	0.21	0.21	NA	NA	0.02	0.23	0.23	NA	NA	XXX
95870	.....	A	Muscle test, nonparaspinal	0.37	0.37	0.42	0.37	0.42	0.03	0.77	0.82	0.77	0.82	XXX
95870	26	A	Muscle test, nonparaspinal	0.37	0.16	0.21	0.16	0.21	0.01	0.54	0.59	0.54	0.59	XXX
95870	TC	A	Muscle test, nonparaspinal	0.00	0.21	0.21	NA	NA	0.02	0.23	0.23	NA	NA	XXX
95872	.....	A	Muscle test, one fiber	1.50	1.26	1.29	1.26	1.29	0.08	2.84	2.87	2.84	2.87	XXX
95872	26	A	Muscle test, one fiber	1.50	0.66	0.68	0.66	0.68	0.04	2.20	2.22	2.20	2.22	XXX
95872	TC	A	Muscle test, one fiber	0.00	0.60	0.61	NA	NA	0.04	0.64	0.65	NA	NA	XXX
95875	.....	A	Limb exercise test	1.34	1.32	1.15	1.32	1.15	0.09	2.75	2.58	2.75	2.58	XXX
95875	26	A	Limb exercise test	1.34	0.56	0.48	0.56	0.48	0.04	1.94	1.86	1.94	1.86	XXX
95875	TC	A	Limb exercise test	0.00	0.76	0.67	NA	NA	0.05	0.81	0.72	NA	NA	XXX
95900	.....	A	Motor nerve conduction test	0.42	0.70	0.70	0.70	0.70	0.03	1.15	1.15	1.15	1.15	XXX
95900	26	A	Motor nerve conduction test	0.42	0.19	0.24	0.19	0.24	0.01	0.62	0.67	0.62	0.67	XXX
95900	TC	A	Motor nerve conduction test	0.00	0.51	0.46	NA	NA	0.02	0.53	0.48	NA	NA	XXX
95903	.....	A	Motor nerve conduction test	0.60	0.52	0.55	0.52	0.55	0.04	1.16	1.19	1.16	1.19	XXX
95903	26	A	Motor nerve conduction test	0.60	0.27	0.30	0.27	0.30	0.02	0.89	0.92	0.89	0.92	XXX
95903	TC	A	Motor nerve conduction test	0.00	0.25	0.25	NA	NA	0.02	0.27	0.27	NA	NA	XXX
95904	.....	A	Sense/mixed n conduction tst	0.34	0.62	0.62	0.62	0.62	0.03	0.99	0.99	0.99	0.99	XXX
95904	26	A	Sense/mixed n conduction tst	0.34	0.15	0.21	0.15	0.21	0.01	0.50	0.56	0.50	0.56	XXX
95904	TC	A	Sense/mixed n conduction tst	0.00	0.47	0.41	NA	NA	0.02	0.49	0.43	NA	NA	XXX
95920	.....	A	Intraop nerve test add-on	2.11	2.26	2.42	2.26	2.42	0.20	4.57	4.73	4.57	4.73	ZZZ
95920	26	A	Intraop nerve test add-on	2.11	0.96	1.11	0.96	1.11	0.14	3.21	3.36	3.21	3.36	ZZZ
95920	TC	A	Intraop nerve test add-on	0.00	1.30	1.31	NA	NA	0.06	1.36	1.37	NA	NA	ZZZ
95921	.....	A	Autonomic nerv function test	0.90	0.71	0.72	0.71	0.72	0.05	1.66	1.67	1.66	1.67	XXX
95921	26	A	Autonomic nerv function test	0.90	0.34	0.34	0.34	0.34	0.03	1.27	1.27	1.27	1.27	XXX
95921	TC	A	Autonomic nerv function test	0.00	0.37	0.38	NA	NA	0.02	0.39	0.40	NA	NA	XXX
95922	.....	A	Autonomic nerv function test	0.96	0.79	0.79	0.79	0.79	0.05	1.80	1.80	1.80	1.80	XXX
95922	26	A	Autonomic nerv function test	0.96	0.42	0.41	0.42	0.41	0.03	1.41	1.40	1.41	1.40	XXX
95922	TC	A	Autonomic nerv function test	0.00	0.37	0.38	NA	NA	0.02	0.39	0.40	NA	NA	XXX
95923	.....	A	Autonomic nerv function test	0.90	2.60	2.14	2.60	2.14	0.05	3.55	3.09	3.55	3.09	XXX
95923	26	A	Autonomic nerv function test	0.90	0.39	0.38	0.39	0.38	0.03	1.32	1.31	1.32	1.31	XXX
95923	TC	A	Autonomic nerv function test	0.00	2.21	1.76	NA	NA	0.02	2.23	1.78	NA	NA	XXX
95925	.....	A	Somatosensory testing	0.54	1.13	1.26	1.13	1.26	0.07	1.74	1.87	1.74	1.87	XXX
95925	26	A	Somatosensory testing	0.54	0.23	0.35	0.23	0.35	0.02	0.79	0.91	0.79	0.91	XXX
95925	TC	A	Somatosensory testing	0.00	0.90	0.91	NA	NA	0.05	0.95	0.96	NA	NA	XXX
95926	.....	A	Somatosensory testing	0.54	1.14	1.26	1.14	1.26	0.07	1.75	1.87	1.75	1.87	XXX
95926	26	A	Somatosensory testing	0.54	0.24	0.35	0.24	0.35	0.02	0.80	0.91	0.80	0.91	XXX
95926	TC	A	Somatosensory testing	0.00	0.90	0.91	NA	NA	0.05	0.95	0.96	NA	NA	XXX
95927	.....	A	Somatosensory testing	0.54	1.16	1.28	1.16	1.28	0.08	1.78	1.90	1.78	1.90	XXX
95927	26	A	Somatosensory testing	0.54	0.26	0.37	0.26	0.37	0.03	0.83	0.94	0.83	0.94	XXX
95927	TC	A	Somatosensory testing	0.00	0.90	0.91	NA	NA	0.05	0.95	0.96	NA	NA	XXX
95930	.....	A	Visual evoked potential test	0.35	0.70	0.75	0.70	0.75	0.02	1.07	1.12	1.07	1.12	XXX
95930	26	A	Visual evoked potential test	0.35	0.15	0.27	0.15	0.27	0.01	0.51	0.63	0.51	0.63	XXX
95930	TC	A	Visual evoked potential test	0.00	0.55	0.48	NA	NA	0.01	0.56	0.49	NA	NA	XXX
95933	.....	A	Blink reflex test	0.59	1.02	1.11	1.02	1.11	0.07	1.68	1.77	1.68	1.77	XXX
95933	26	A	Blink reflex test	0.59	0.24	0.32	0.24	0.32	0.02	0.85	0.93	0.85	0.93	XXX
95933	TC	A	Blink reflex test	0.00	0.78	0.79	NA	NA	0.05	0.83	0.84	NA	NA	XXX
95934	.....	A	H-reflex test	0.51	0.44	0.48	0.44	0.48	0.04	0.99	1.03	0.99	1.03	XXX
95934	26	A	H-reflex test	0.51	0.23	0.27	0.23	0.27	0.02	0.76	0.80	0.76	0.80	XXX
95934	TC	A	H-reflex test	0.00	0.21	0.21	NA	NA	0.02	0.23	0.23	NA	NA	XXX
95936	.....	A	H-reflex test	0.55	0.46	0.49	0.46	0.49	0.04	1.05	1.08	1.05	1.08	XXX
95936	26	A	H-reflex test	0.55	0.25	0.28	0.25	0.28	0.02	0.82	0.85	0.82	0.85	XXX
95936	TC	A	H-reflex test	0.00	0.21	0.21	NA	NA	0.02	0.23	0.23	NA	NA	XXX
95937	.....	A	Neuromuscular junction test	0.65	0.62	0.67	0.62	0.67	0.04	1.31	1.36	1.31	1.36	XXX

[1] CPT codes and descriptions only are copyright 2000 American Medical Association. All Rights Reserved. Applicable FARS/DFARS Apply.
[2] Copyright 1994 American Dental Association. All rights reserved.
[3] + Indicates RVUs are not used for Medicare payment.
[4] PE RVUs = Practice Expense Relative Value Units.

ADDENDUM B.—RELATIVE VALUE UNITS (RVU'S) AND RELATED INFORMATION—Continued

CPT[1]/ HCPCS[2]	MOD	Status	Description	Physician Work RVUs[3]	Fully Implemented Non-Facility PE RVUs	Year 2001 Transitional Non-Facility PE RVUs	Fully Implemented Facility PE RVUs	Year 2001 Transitional Facility PE RVUs	Mal-Practice RVUs	Fully Implemented Non-Facility Total	Year 2001 Transitional Non-Facility Total	Fully Implemented Facility Total	Year 2001 Transitional Facility Total	Global
95937	26	A	Neuromuscular junction test	0.65	0.28	0.33	0.28	0.33	0.02	0.95	1.00	0.95	1.00	XXX
95937	TC	A	Neuromuscular junction test	0.00	0.34	0.34	NA	NA	0.02	0.36	0.36	NA	NA	XXX
95950		A	Ambulatory eeg monitoring	1.51	3.79	4.81	3.79	4.81	0.44	5.74	6.76	5.74	6.76	XXX
95950	26	A	Ambulatory eeg monitoring	1.51	0.67	0.83	0.67	0.83	0.08	2.26	2.42	2.26	2.42	XXX
95950	TC	A	Ambulatory eeg monitoring	0.00	3.12	3.98	NA	NA	0.36	3.48	4.34	NA	NA	XXX
95951		A	EEG monitoring/videorecord	6.00	23.52	20.04	23.52	20.04	0.58	30.10	26.62	30.10	26.62	XXX
95951	26	A	EEG monitoring/videorecord	6.00	2.61	2.37	2.61	2.37	0.20	8.81	8.57	8.81	8.57	XXX
95951	TC	A	EEG monitoring/videorecord	0.00	20.91	17.67	NA	NA	0.38	21.29	18.05	NA	NA	XXX
95953		A	EEG monitoring/computer	3.08	7.61	7.68	7.61	7.68	0.46	11.15	11.22	11.15	11.22	XXX
95953	26	A	EEG monitoring/computer	3.08	1.33	1.33	1.33	1.33	0.10	4.51	4.51	4.51	4.51	XXX
95953	TC	A	EEG monitoring/computer	0.00	6.28	6.35	NA	NA	0.36	6.64	6.71	NA	NA	XXX
95954		A	EEG monitoring/giving drugs	2.45	4.33	3.88	4.33	3.88	0.15	6.93	6.48	6.93	6.48	XXX
95954	26	A	EEG monitoring/giving drugs	2.45	1.06	1.30	1.06	1.30	0.10	3.61	3.85	3.61	3.85	XXX
95954	TC	A	EEG monitoring/giving drugs	0.00	3.27	2.58	NA	NA	0.05	3.32	2.63	NA	NA	XXX
95955		A	EEG during surgery	1.01	2.30	2.51	2.30	2.51	0.19	3.50	3.71	3.50	3.71	XXX
95955	26	A	EEG during surgery	1.01	0.35	0.54	0.35	0.54	0.05	1.41	1.60	1.41	1.60	XXX
95955	TC	A	EEG during surgery	0.00	1.95	1.97	NA	NA	0.14	2.09	2.11	NA	NA	XXX
95956		A	Eeg monitoring, cable/radio	3.08	31.25	25.48	31.25	25.48	0.47	34.80	29.03	34.80	29.03	XXX
95956	26	A	Eeg monitoring, cable/radio	3.08	1.34	1.41	1.34	1.41	0.11	4.53	4.60	4.53	4.60	XXX
95956	TC	A	Eeg monitoring, cable/radio	0.00	29.91	24.07	NA	NA	0.36	30.27	24.43	NA	NA	XXX
95957		A	EEG digital analysis	1.98	2.56	2.53	2.56	2.53	0.17	4.71	4.68	4.71	4.68	XXX
95957	26	A	EEG digital analysis	1.98	0.87	0.82	0.87	0.82	0.07	2.92	2.87	2.92	2.87	XXX
95957	TC	A	EEG digital analysis	0.00	1.69	1.71	NA	NA	0.10	1.79	1.81	NA	NA	XXX
95958		A	EEG monitoring/function test	4.25	3.53	3.98	3.53	3.98	0.29	8.07	8.52	8.07	8.52	XXX
95958	26	A	EEG monitoring/function test	4.25	1.80	2.23	1.80	2.23	0.18	6.23	6.66	6.23	6.66	XXX
95958	TC	A	EEG monitoring/function test	0.00	1.73	1.75	NA	NA	0.11	1.84	1.86	NA	NA	XXX
95961		A	Electrode stimulation, brain	2.97	2.63	2.70	2.63	2.70	0.24	5.84	5.91	5.84	5.91	XXX
95961	26	A	Electrode stimulation, brain	2.97	1.33	1.39	1.33	1.39	0.18	4.48	4.54	4.48	4.54	XXX
95961	TC	A	Electrode stimulation, brain	0.00	1.30	1.31	NA	NA	0.06	1.36	1.37	NA	NA	XXX
95962		A	Electrode stim, brain add-on	3.21	2.71	2.76	2.71	2.76	0.23	6.15	6.20	6.15	6.20	ZZZ
95962	26	A	Electrode stim, brain add-on	3.21	1.41	1.45	1.41	1.45	0.17	4.79	4.83	4.79	4.83	ZZZ
95962	TC	A	Electrode stim, brain add-on	0.00	1.30	1.31	NA	NA	0.06	1.36	1.37	NA	NA	ZZZ
95970		A	Analyze neurostim, no prog	0.45	0.17	0.17	0.14	0.14	0.03	0.65	0.65	0.62	0.62	XXX
95971		A	Analyze neurostim, simple	0.78	0.29	0.29	0.23	0.23	0.06	1.13	1.13	1.07	1.07	XXX
95972		A	Analyze neurostim, complex	1.50	0.63	0.63	0.55	0.55	0.17	2.30	2.30	2.22	2.22	XXX
95973		A	Analyze neurostim, complex	0.92	0.40	0.40	0.37	0.37	0.07	1.39	1.39	1.36	1.36	ZZZ
95974		A	Cranial neurostim, complex	3.00	1.32	1.32	1.32	1.32	0.15	4.47	4.47	4.47	4.47	XXX
95975		A	Cranial neurostim, complex	1.70	0.74	0.74	0.73	0.73	0.07	2.51	2.51	2.50	2.50	ZZZ
95999		C	Neurological procedure	0.00	0.00	0.00	0.00	0.00	0.00	0.00	0.00	0.00	0.00	XXX
96100		A	Psychological testing	0.00	1.75	1.77	1.75	1.77	0.15	1.90	1.92	1.90	1.92	XXX
96105		A	Assessment of aphasia	0.00	1.75	1.77	1.75	1.77	0.15	1.90	1.92	1.90	1.92	XXX
96110		C	Developmental test, lim	0.00	0.00	0.00	0.00	0.00	0.00	0.00	0.00	0.00	0.00	XXX
96111		A	Developmental test, extend	0.00	1.75	1.77	1.75	1.77	0.15	1.90	1.92	1.90	1.92	XXX
96115		A	Neurobehavior status exam	0.00	1.75	1.77	1.75	1.77	0.15	1.90	1.92	1.90	1.92	XXX
96117		A	Neuropsych test battery	0.00	1.75	1.77	1.75	1.77	0.15	1.90	1.92	1.90	1.92	XXX
96400		A	Chemotherapy, sc/im	0.00	0.13	0.13	0.13	0.13	0.01	0.14	0.14	0.14	0.14	XXX
96405		A	Intralesional chemo admin	0.52	1.82	1.47	0.25	0.24	0.02	2.36	2.01	0.79	0.78	000
96406		A	Intralesional chemo admin	0.80	2.53	2.05	0.31	0.31	0.02	3.35	2.87	1.13	1.13	000
96408		A	Chemotherapy, push technique	0.00	0.96	0.97	0.96	0.97	0.05	1.01	1.02	1.01	1.02	XXX
96410		A	Chemotherapy,infusion method	0.00	1.54	1.56	1.54	1.56	0.07	1.61	1.63	1.61	1.63	XXX
96412		A	Chemo, infuse method add-on	0.00	1.14	1.15	1.14	1.15	0.06	1.20	1.21	1.20	1.21	ZZZ
96414		A	Chemo, infuse method add-on	0.00	1.33	1.34	1.33	1.34	0.07	1.40	1.41	1.40	1.41	XXX
96420		A	Chemotherapy, push technique	0.00	1.24	1.25	1.24	1.25	0.07	1.31	1.32	1.31	1.32	XXX
96422		A	Chemotherapy,infusion method	0.00	1.22	1.23	1.22	1.23	0.07	1.29	1.30	1.29	1.30	XXX
96423		A	Chemo, infuse method add-on	0.00	0.48	0.49	0.48	0.49	0.02	0.50	0.51	0.50	0.51	ZZZ
96425		A	Chemotherapy,infusion method	0.00	1.42	1.44	1.42	1.44	0.07	1.49	1.51	1.49	1.51	XXX
96440		A	Chemotherapy, intracavitary	2.37	7.97	6.20	1.12	1.06	0.12	10.46	8.69	3.61	3.55	000
96445		A	Chemotherapy, intracavitary	2.20	8.33	6.51	1.04	0.91	0.07	10.60	8.78	3.31	3.18	000
96450		A	Chemotherapy, into CNS	1.89	6.73	5.28	0.90	0.79	0.06	8.68	7.23	2.85	2.74	000
96520		A	Pump refilling, maintenance	0.00	0.88	0.89	0.88	0.89	0.05	0.93	0.94	0.93	0.94	XXX
96530		A	Pump refilling, maintenance	0.00	1.06	1.07	1.06	1.07	0.05	1.11	1.12	1.11	1.12	XXX
96542		A	Chemotherapy injection	1.42	4.02	3.31	0.57	0.58	0.05	5.49	4.78	2.04	2.05	XXX
96545		B	Provide chemotherapy agent	0.00	0.00	0.00	0.00	0.00	0.00	0.00	0.00	0.00	0.00	XXX
96549		C	Chemotherapy, unspecified	0.00	0.00	0.00	0.00	0.00	0.00	0.00	0.00	0.00	0.00	XXX
96570		A	Photodynamic tx, 30 min	1.10	0.44	0.44	0.44	0.44	0.04	1.58	1.58	1.58	1.58	ZZZ
96571		A	Photodynamic tx, addl 15 min	0.55	0.22	0.22	0.22	0.22	0.02	0.79	0.79	0.79	0.79	ZZZ
96900		A	Ultraviolet light therapy	0.00	0.39	0.40	0.39	0.40	0.02	0.41	0.42	0.41	0.42	XXX
96902		B	Trichogram	+0.41	0.25	0.27	0.16	0.20	0.01	0.67	0.69	0.58	0.62	XXX
96910		A	Photochemotherapy with UV-B	0.00	0.58	0.59	0.58	0.59	0.03	0.61	0.62	0.61	0.62	XXX
96912		A	Photochemotherapy with UV-A	0.00	0.65	0.66	0.65	0.66	0.04	0.69	0.70	0.69	0.70	XXX
96913		A	Photochemotherapy, UV-A or B	0.00	1.35	1.36	1.35	1.36	0.08	1.43	1.44	1.43	1.44	XXX
96999		C	Dermatological procedure	0.00	0.00	0.00	0.00	0.00	0.00	0.00	0.00	0.00	0.00	XXX
97001		A	Pt evaluation	1.20	0.56	0.52	0.48	0.46	0.10	1.86	1.82	1.78	1.76	XXX
97002		A	Pt re-evaluation	0.60	0.35	0.27	0.26	0.21	0.04	0.99	0.91	0.90	0.85	XXX
97003		A	Ot evaluation	1.20	0.67	0.60	0.32	0.34	0.05	1.92	1.85	1.57	1.59	XXX
97004		A	Ot re-evaluation	0.60	0.43	0.33	0.13	0.11	0.02	1.05	0.95	0.75	0.73	XXX
97010		B	Hot or cold packs therapy	+0.06	0.24	0.24	0.01	0.07	0.01	0.31	0.31	0.08	0.14	XXX
97012		A	Mechanical traction therapy	0.25	0.27	0.26	0.05	0.09	0.01	0.53	0.52	0.31	0.35	XXX
97014		A	Electric stimulation therapy	0.18	0.25	0.24	0.03	0.08	0.01	0.44	0.43	0.22	0.27	XXX
97016		A	Vasopneumatic device therapy	0.18	0.25	0.26	0.03	0.09	0.01	0.44	0.45	0.22	0.28	XXX
97018		A	Paraffin bath therapy	0.06	0.22	0.23	0.01	0.07	0.01	0.29	0.30	0.08	0.14	XXX
97020		A	Microwave therapy	0.06	0.23	0.23	0.01	0.06	0.01	0.30	0.30	0.08	0.13	XXX
97022		A	Whirlpool therapy	0.17	0.43	0.38	0.03	0.08	0.01	0.61	0.56	0.21	0.26	XXX

[1] CPT codes and descriptions only are copyright 2000 American Medical Association. All Rights Reserved. Applicable FARS/DFARS Apply.
[2] Copyright 1994 American Dental Association. All rights reserved.
[3] + Indicates RVUs are not used for Medicare payment.
[4] PE RVUs = Practice Expense Relative Value Units.

ADDENDUM B.—RELATIVE VALUE UNITS (RVU'S) AND RELATED INFORMATION—Continued

CPT[1]/ HCPCS[2]	MOD	Status	Description	Physician Work RVUs[3]	Fully Implemented Non-Facility PE RVUs	Year 2001 Transitional Non-Facility PE RVUs	Fully Implemented Facility PE RVUs	Year 2001 Transitional Facility PE RVUs	Mal-Practice RVUs	Fully Implemented Non-Facility Total	Year 2001 Transitional Non-Facility Total	Fully Implemented Facility Total	Year 2001 Transitional Facility Total	Global
97024		A	Diathermy treatment	0.06	0.24	0.24	0.01	0.07	0.01	0.31	0.31	0.08	0.14	XXX
97026		A	Infrared therapy	0.06	0.22	0.22	0.01	0.06	0.01	0.29	0.29	0.08	0.13	XXX
97028		A	Ultraviolet therapy	0.08	0.22	0.22	0.01	0.06	0.01	0.31	0.31	0.10	0.15	XXX
97032		A	Electrical stimulation	0.25	0.28	0.25	0.05	0.08	0.01	0.54	0.51	0.31	0.34	XXX
97033		A	Electric current therapy	0.26	0.31	0.27	0.05	0.08	0.02	0.59	0.55	0.33	0.36	XXX
97034		A	Contrast bath therapy	0.21	0.27	0.23	0.04	0.06	0.01	0.49	0.45	0.26	0.28	XXX
97035		A	Ultrasound therapy	0.21	0.17	0.16	0.04	0.06	0.01	0.39	0.38	0.26	0.28	XXX
97036		A	Hydrotherapy	0.28	0.36	0.33	0.05	0.10	0.01	0.65	0.62	0.34	0.39	XXX
97039		A	Physical therapy treatment	0.20	0.27	0.27	0.04	0.10	0.01	0.48	0.48	0.25	0.31	XXX
97110		A	Therapeutic exercises	0.45	0.19	0.18	0.08	0.10	0.03	0.67	0.66	0.56	0.58	XXX
97112		A	Neuromuscular reeducation	0.45	0.30	0.26	0.08	0.10	0.02	0.77	0.73	0.55	0.57	XXX
97113		A	Aquatic therapy/exercises	0.44	0.32	0.30	0.08	0.12	0.03	0.79	0.77	0.55	0.59	XXX
97116		A	Gait training therapy	0.40	0.30	0.26	0.07	0.08	0.02	0.72	0.68	0.49	0.50	XXX
97124		A	Massage therapy	0.35	0.28	0.24	0.06	0.08	0.01	0.64	0.60	0.42	0.44	XXX
97139		A	Physical medicine procedure	0.21	0.25	0.23	0.04	0.07	0.01	0.47	0.45	0.26	0.29	XXX
97140		A	Manual therapy	0.43	0.31	0.31	0.08	0.08	0.02	0.76	0.76	0.53	0.53	XXX
97150		A	Group therapeutic procedures	0.27	0.27	0.26	0.05	0.09	0.02	0.56	0.55	0.34	0.38	XXX
97504		A	Orthotic training	0.45	0.30	0.26	0.08	0.10	0.03	0.78	0.74	0.56	0.58	XXX
97520		A	Prosthetic training	0.45	0.30	0.27	0.08	0.10	0.02	0.77	0.74	0.55	0.57	XXX
97530		A	Therapeutic activities	0.44	0.18	0.18	0.08	0.11	0.02	0.64	0.64	0.54	0.57	XXX
97532		A	Cognitive skills development	0.44	0.23	0.23	0.08	0.08	0.01	0.68	0.68	0.53	0.53	XXX
97533		A	Sensory integration	0.44	0.29	0.29	0.08	0.08	0.01	0.74	0.74	0.53	0.53	XXX
97535		A	Self care mngment training	0.45	0.30	0.27	0.08	0.11	0.02	0.77	0.74	0.55	0.58	XXX
97537		A	Community/work reintegration	0.45	0.30	0.27	0.08	0.11	0.01	0.76	0.73	0.54	0.57	XXX
97542		A	Wheelchair mngment training	0.25	0.26	0.24	0.05	0.08	0.01	0.52	0.50	0.31	0.34	XXX
97545		R	Work hardening	0.00	0.00	0.00	0.00	0.00	0.00	0.00	0.00	0.00	0.00	XXX
97546		R	Work hardening add-on	0.00	0.00	0.00	0.00	0.00	0.00	0.00	0.00	0.00	0.00	ZZZ
97601		A	Wound care selective	0.50	0.49	0.49	0.09	0.09	0.04	1.03	1.03	0.63	0.63	XXX
97602		B	Wound care non-selective	0.00	0.00	0.00	0.00	0.00	0.00	0.00	0.00	0.00	0.00	XXX
97703		A	Prosthetic checkout	0.25	0.15	0.16	0.05	0.09	0.02	0.42	0.43	0.32	0.36	XXX
97750		A	Physical performance test	0.45	0.24	0.25	0.08	0.13	0.02	0.71	0.72	0.55	0.60	XXX
97770		D	Cognitive skills development	0.00	0.00	0.00	0.00	0.00	0.00	0.00	0.00	0.00	0.00	XXX
97780		N	Acupuncture w/o stimul	0.00	0.00	0.00	0.00	0.00	0.00	0.00	0.00	0.00	0.00	XXX
97781		N	Acupuncture w/stimul	0.00	0.00	0.00	0.00	0.00	0.00	0.00	0.00	0.00	0.00	XXX
97799		C	Physical medicine procedure	0.00	0.00	0.00	0.00	0.00	0.00	0.00	0.00	0.00	0.00	XXX
97802		N	Medical nutrition, indiv, in	0.00	0.00	0.00	0.00	0.00	0.00	0.00	0.00	0.00	0.00	XXX
97803		N	Med nutrition, indiv, subseq	0.00	0.00	0.00	0.00	0.00	0.00	0.00	0.00	0.00	0.00	XXX
97804		N	Medical nutrition, group	0.00	0.00	0.00	0.00	0.00	0.00	0.00	0.00	0.00	0.00	XXX
98925		A	Osteopathic manipulation	0.45	0.39	0.36	0.15	0.18	0.01	0.85	0.82	0.61	0.64	000
98926		A	Osteopathic manipulation	0.65	0.45	0.45	0.26	0.30	0.02	1.12	1.12	0.93	0.97	000
98927		A	Osteopathic manipulation	0.87	0.52	0.49	0.31	0.34	0.03	1.42	1.39	1.21	1.24	000
98928		A	Osteopathic manipulation	1.03	0.60	0.57	0.36	0.39	0.03	1.66	1.63	1.42	1.45	000
98929		A	Osteopathic manipulation	1.19	0.66	0.60	0.38	0.39	0.04	1.89	1.83	1.61	1.62	000
98940		A	Chiropractic manipulation	0.45	0.25	0.27	0.13	0.14	0.01	0.71	0.73	0.59	0.60	000
98941		A	Chiropractic manipulation	0.65	0.31	0.31	0.18	0.18	0.02	0.98	0.98	0.85	0.85	000
98942		A	Chiropractic manipulation	0.87	0.37	0.36	0.25	0.23	0.03	1.27	1.26	1.15	1.13	000
98943		N	Chiropractic manipulation	+0.40	0.36	0.35	0.16	0.20	0.01	0.77	0.76	0.57	0.61	XXX
99000		B	Specimen handling	0.00	0.00	0.00	0.00	0.00	0.00	0.00	0.00	0.00	0.00	XXX
99001		B	Specimen handling	0.00	0.00	0.00	0.00	0.00	0.00	0.00	0.00	0.00	0.00	XXX
99002		B	Device handling	0.00	0.00	0.00	0.00	0.00	0.00	0.00	0.00	0.00	0.00	XXX
99024		B	Postop follow-up visit	0.00	0.00	0.00	0.00	0.00	0.00	0.00	0.00	0.00	0.00	XXX
99025		B	Initial surgical evaluation	0.00	0.00	0.00	0.00	0.00	0.00	0.00	0.00	0.00	0.00	XXX
99050		B	Medical services after hrs	0.00	0.00	0.00	0.00	0.00	0.00	0.00	0.00	0.00	0.00	XXX
99052		B	Medical services at night	0.00	0.00	0.00	0.00	0.00	0.00	0.00	0.00	0.00	0.00	XXX
99054		B	Medical servcs, unusual hrs	0.00	0.00	0.00	0.00	0.00	0.00	0.00	0.00	0.00	0.00	XXX
99056		B	Non-office medical services	0.00	0.00	0.00	0.00	0.00	0.00	0.00	0.00	0.00	0.00	XXX
99058		B	Office emergency care	0.00	0.00	0.00	0.00	0.00	0.00	0.00	0.00	0.00	0.00	XXX
99070		B	Special supplies	0.00	0.00	0.00	0.00	0.00	0.00	0.00	0.00	0.00	0.00	XXX
99071		B	Patient education materials	0.00	0.00	0.00	0.00	0.00	0.00	0.00	0.00	0.00	0.00	XXX
99075		N	Medical testimony	0.00	0.00	0.00	0.00	0.00	0.00	0.00	0.00	0.00	0.00	XXX
99078		B	Group health education	0.00	0.00	0.00	0.00	0.00	0.00	0.00	0.00	0.00	0.00	XXX
99080		B	Special reports or forms	0.00	0.00	0.00	0.00	0.00	0.00	0.00	0.00	0.00	0.00	XXX
99082		C	Unusual physician travel	0.00	0.00	0.00	0.00	0.00	0.00	0.00	0.00	0.00	0.00	XXX
99090		B	Computer data analysis	0.00	0.00	0.00	0.00	0.00	0.00	0.00	0.00	0.00	0.00	XXX
99100		B	Special anesthesia service	0.00	0.00	0.00	0.00	0.00	0.00	0.00	0.00	0.00	0.00	ZZZ
99116		B	Anesthesia with hypothermia	0.00	0.00	0.00	0.00	0.00	0.00	0.00	0.00	0.00	0.00	ZZZ
99135		B	Special anesthesia procedure	0.00	0.00	0.00	0.00	0.00	0.00	0.00	0.00	0.00	0.00	ZZZ
99140		B	Emergency anesthesia	0.00	0.00	0.00	0.00	0.00	0.00	0.00	0.00	0.00	0.00	ZZZ
99141		B	Sedation, iv/im or inhalant	+0.80	2.00	1.73	0.39	0.52	0.04	2.84	2.57	1.23	1.36	XXX
99142		B	Sedation, oral/rectal/nasal	+0.60	1.17	1.05	0.31	0.40	0.03	1.80	1.68	0.94	1.03	XXX
99170		A	Anogenital exam, child	1.75	1.87	1.87	0.70	0.70	0.07	3.69	3.69	2.52	2.52	000
99172		N	Ocular function screen	0.00	0.00	0.00	0.00	0.00	0.00	0.00	0.00	0.00	0.00	XXX
99173		N	Visual acuity screen	0.00	0.00	0.00	0.00	0.00	0.00	0.00	0.00	0.00	0.00	XXX
99175		A	Induction of vomiting	0.00	1.38	1.40	1.38	1.40	0.08	1.46	1.48	1.46	1.48	XXX
99183		A	Hyperbaric oxygen therapy	2.34	NA	NA	0.76	1.02	0.12	NA	NA	3.22	3.48	XXX
99185		A	Regional hypothermia	0.00	0.63	0.64	0.63	0.64	0.03	0.66	0.67	0.66	0.67	XXX
99186		A	Total body hypothermia	0.00	1.77	1.79	1.77	1.79	0.37	2.14	2.16	2.14	2.16	XXX
99190		X	Special pump services	0.00	0.00	0.00	0.00	0.00	0.00	0.00	0.00	0.00	0.00	XXX
99191		X	Special pump services	0.00	0.00	0.00	0.00	0.00	0.00	0.00	0.00	0.00	0.00	XXX
99192		X	Special pump services	0.00	0.00	0.00	0.00	0.00	0.00	0.00	0.00	0.00	0.00	XXX
99195		A	Phlebotomy	0.00	0.44	0.45	0.44	0.45	0.02	0.46	0.47	0.46	0.47	XXX
99199		C	Special service/proc/report	0.00	0.00	0.00	0.00	0.00	0.00	0.00	0.00	0.00	0.00	XXX
99201		A	Office/outpatient visit, new	0.45	0.46	0.46	0.16	0.17	0.02	0.93	0.93	0.63	0.64	XXX

[1] CPT codes and descriptions only are copyright 2000 American Medical Association. All Rights Reserved. Applicable FARS/DFARS Apply.
[2] Copyright 1994 American Dental Association. All rights reserved.
[3] + Indicates RVUs are not used for Medicare payment.
[4] PE RVUs = Practice Expense Relative Value Units.

ADDENDUM B.—RELATIVE VALUE UNITS (RVU'S) AND RELATED INFORMATION—Continued

CPT[1]/ HCPCS[2]	MOD	Status	Description	Physician Work RVUs[3]	Fully Implemented Non-Facility PE RVUs	Year 2001 Transitional Non-Facility PE RVUs	Fully Implemented Facility PE RVUs	Year 2001 Transitional Facility PE RVUs	Mal-Practice RVUs	Fully Implemented Non-Facility Total	Year 2001 Transitional Non-Facility Total	Fully Implemented Facility Total	Year 2001 Transitional Facility Total	Global
99202		A	Office/outpatient visit, new	0.88	0.74	0.69	0.33	0.31	0.05	1.67	1.62	1.26	1.24	XXX
99203		A	Office/outpatient visit, new	1.34	1.08	0.97	0.50	0.45	0.08	2.50	2.39	1.92	1.87	XXX
99204		A	Office/outpatient visit, new	2.00	1.50	1.37	0.74	0.66	0.10	3.60	3.47	2.84	2.76	XXX
99205		A	Office/outpatient visit, new	2.67	1.77	1.59	0.97	0.84	0.12	4.56	4.38	3.76	3.63	XXX
99211		A	Office/outpatient visit, est	0.17	0.37	0.34	0.06	0.07	0.01	0.55	0.52	0.24	0.25	XXX
99212		A	Office/outpatient visit, est	0.45	0.51	0.47	0.17	0.17	0.02	0.98	0.94	0.64	0.64	XXX
99213		A	Office/outpatient visit, est	0.67	0.67	0.62	0.24	0.23	0.03	1.37	1.32	0.94	0.93	XXX
99214		A	Office/outpatient visit, est	1.10	1.02	0.92	0.40	0.37	0.04	2.16	2.06	1.54	1.51	XXX
99215		A	Office/outpatient visit, est	1.77	1.32	1.22	0.65	0.59	0.07	3.16	3.06	2.49	2.43	XXX
99217		A	Observation care discharge	1.28	NA	NA	0.45	0.48	0.05	NA	NA	1.78	1.81	XXX
99218		A	Observation care	1.28	NA	NA	0.45	0.52	0.05	NA	NA	1.78	1.85	XXX
99219		A	Observation care	2.14	NA	NA	0.74	0.84	0.08	NA	NA	2.96	3.06	XXX
99220		A	Observation care	2.99	NA	NA	1.05	1.10	0.11	NA	NA	4.15	4.20	XXX
99221		A	Initial hospital care	1.28	NA	NA	0.47	0.54	0.05	NA	NA	1.80	1.87	XXX
99222		A	Initial hospital care	2.14	NA	NA	0.76	0.85	0.08	NA	NA	2.98	3.07	XXX
99223		A	Initial hospital care	2.99	NA	NA	1.07	1.11	0.10	NA	NA	4.16	4.20	XXX
99231		A	Subsequent hospital care	0.64	NA	NA	0.24	0.28	0.02	NA	NA	0.90	0.94	XXX
99232		A	Subsequent hospital care	1.06	NA	NA	0.38	0.41	0.03	NA	NA	1.47	1.50	XXX
99233		A	Subsequent hospital care	1.51	NA	NA	0.54	0.57	0.05	NA	NA	2.10	2.13	XXX
99234		A	Observ/hosp same date	1.95	NA	NA	0.70	0.71	0.11	NA	NA	2.76	2.77	XXX
99235		A	Observ/hosp same date	2.81	NA	NA	0.03	1.03	0.13	NA	NA	3.93	4.74	XXX
99236		A	Observ/hosp same date	3.66	NA	NA	1.25	1.25	0.17	NA	NA	5.08	5.85	XXX
99238		A	Hospital discharge day	1.28	NA	NA	0.45	0.48	0.04	NA	NA	1.77	1.80	XXX
99239		A	Hospital discharge day	1.75	NA	NA	0.62	0.60	0.05	NA	NA	2.42	2.40	XXX
99241		A	Office consultation	0.64	0.60	0.62	0.23	0.26	0.04	1.28	1.30	0.91	0.94	XXX
99242		A	Office consultation	1.29	1.00	0.96	0.49	0.47	0.09	2.38	2.34	1.87	1.85	XXX
99243		A	Office consultation	1.72	1.34	1.27	0.67	0.64	0.10	3.16	3.09	2.49	2.46	XXX
99244		A	Office consultation	2.58	1.78	1.67	0.97	0.90	0.13	4.49	4.38	3.68	3.61	XXX
99245		A	Office consultation	3.43	2.24	2.14	1.29	1.20	0.16	5.83	5.73	4.88	4.79	XXX
99251		A	Initial inpatient consult	0.66	NA	NA	0.30	0.41	0.04	NA	NA	1.00	1.11	XXX
99252		A	Initial inpatient consult	1.32	NA	NA	0.57	0.63	0.08	NA	NA	1.97	2.03	XXX
99253		A	Initial inpatient consult	1.82	NA	NA	0.76	0.83	0.09	NA	NA	2.67	2.74	XXX
99254		A	Initial inpatient consult	2.64	NA	NA	1.07	1.13	0.11	NA	NA	3.82	3.88	XXX
99255		A	Initial inpatient consult	3.65	NA	NA	1.44	1.51	0.15	NA	NA	5.24	5.31	XXX
99261		A	Follow-up inpatient consult	0.42	NA	NA	0.21	0.25	0.02	NA	NA	0.65	0.69	XXX
99262		A	Follow-up inpatient consult	0.85	NA	NA	0.37	0.40	0.03	NA	NA	1.25	1.28	XXX
99263		A	Follow-up inpatient consult	1.27	NA	NA	0.52	0.57	0.04	NA	NA	1.83	1.88	XXX
99271		A	Confirmatory consultation	0.45	0.64	0.64	0.21	0.24	0.03	1.12	1.12	0.69	0.72	XXX
99272		A	Confirmatory consultation	0.84	0.87	0.85	0.37	0.38	0.06	1.77	1.75	1.27	1.28	XXX
99273		A	Confirmatory consultation	1.19	1.09	1.10	0.51	0.52	0.07	2.35	2.36	1.77	1.78	XXX
99274		A	Confirmatory consultation	1.73	1.41	1.39	0.73	0.71	0.09	3.23	3.21	2.55	2.53	XXX
99275		A	Confirmatory consultation	2.31	1.64	1.70	0.91	1.16	0.10	4.05	4.11	3.32	3.57	XXX
99281		A	Emergency dept visit	0.33	NA	NA	0.09	0.14	0.02	NA	NA	0.44	0.49	XXX
99282		A	Emergency dept visit	0.55	NA	NA	0.15	0.22	0.03	NA	NA	0.73	0.80	XXX
99283		A	Emergency dept visit	1.24	NA	NA	0.32	0.37	0.08	NA	NA	1.64	1.69	XXX
99284		A	Emergency dept visit	1.95	NA	NA	0.49	0.56	0.12	NA	NA	2.56	2.63	XXX
99285		A	Emergency dept visit	3.06	NA	NA	0.74	0.86	0.19	NA	NA	3.99	4.11	XXX
99288		B	Direct advanced life support	0.00	0.00	0.00	0.00	0.00	0.00	0.00	0.00	0.00	0.00	XXX
99291		A	Critical care, first hour	4.00	1.57	1.57	1.32	1.38	0.14	5.71	5.71	5.46	5.52	XXX
99292		A	Critical care, addl 30 min	2.00	0.85	0.81	0.65	0.66	0.07	2.92	2.88	2.72	2.73	ZZZ
99295		A	Neonatal critical care	16.00	NA	NA	4.86	5.02	0.70	NA	NA	21.56	21.72	XXX
99296		A	Neonatal critical care	8.00	NA	NA	2.61	2.63	0.23	NA	NA	10.84	10.86	XXX
99297		A	Neonatal critical care	4.00	NA	NA	1.32	1.32	0.12	NA	NA	5.44	5.44	XXX
99298		A	Neonatal critical care	2.75	NA	NA	0.96	0.96	0.10	NA	NA	3.81	3.81	XXX
99301		A	Nursing facility care	1.20	NA	NA	0.42	0.44	0.04	NA	NA	1.66	1.68	XXX
99302		A	Nursing facility care	1.61	NA	NA	0.56	0.56	0.05	NA	NA	2.22	2.22	XXX
99303		A	Nursing facility care	2.01	NA	NA	0.69	0.78	0.06	NA	NA	2.76	2.85	XXX
99311		A	Nursing fac care, subseq	0.60	NA	NA	0.21	0.25	0.02	NA	NA	0.83	0.87	XXX
99312		A	Nursing fac care, subseq	1.00	NA	NA	0.34	0.37	0.03	NA	NA	1.37	1.40	XXX
99313		A	Nursing fac care, subseq	1.42	NA	NA	0.49	0.49	0.04	NA	NA	1.95	1.95	XXX
99315		A	Nursing fac discharge day	1.13	NA	NA	0.39	0.43	0.04	NA	NA	1.56	1.60	XXX
99316		A	Nursing fac discharge day	1.50	NA	NA	0.52	0.53	0.05	NA	NA	2.07	2.08	XXX
99321		A	Rest home visit, new patient	0.71	0.43	0.42	0.35	0.36	0.02	1.16	1.15	1.08	1.09	XXX
99322		A	Rest home visit, new patient	1.01	0.68	0.65	0.45	0.48	0.03	1.72	1.69	1.49	1.52	XXX
99323		A	Rest home visit, new patient	1.28	0.93	0.90	0.56	0.62	0.04	2.25	2.22	1.88	1.94	XXX
99331		A	Rest home visit, est pat	0.60	0.47	0.43	0.31	0.31	0.02	1.09	1.05	0.93	0.93	XXX
99332		A	Rest home visit, est pat	0.80	0.59	0.54	0.38	0.38	0.03	1.42	1.37	1.21	1.21	XXX
99333		A	Rest home visit, est pat	1.00	0.72	0.66	0.45	0.46	0.03	1.75	1.69	1.48	1.49	XXX
99341		A	Home visit, new patient	1.01	0.54	0.55	0.48	0.51	0.05	1.60	1.61	1.54	1.57	XXX
99342		A	Home visit, new patient	1.52	0.84	0.79	0.68	0.67	0.05	2.41	2.36	2.25	2.24	XXX
99343		A	Home visit, new patient	2.27	1.30	1.19	1.28	1.17	0.07	3.64	3.53	3.62	3.51	XXX
99344		A	Home visit, new patient	3.03	1.60	1.43	1.30	1.21	0.10	4.73	4.56	4.43	4.34	XXX
99345		A	Home visit, new patient	3.79	1.85	1.62	1.36	1.25	0.12	5.76	5.53	5.27	5.16	XXX
99347		A	Home visit, est patient	0.76	0.47	0.48	0.36	0.39	0.03	1.26	1.27	1.15	1.18	XXX
99348		A	Home visit, est patient	1.26	0.72	0.69	0.53	0.54	0.04	2.02	1.99	1.83	1.84	XXX
99349		A	Home visit, est patient	2.02	1.07	0.97	0.80	0.77	0.06	3.15	3.05	2.88	2.85	XXX
99350		A	Home visit, est patient	3.03	1.48	1.32	1.16	1.08	0.10	4.61	4.45	4.29	4.21	XXX
99354		A	Prolonged service, office	1.77	1.43	1.28	0.63	0.58	0.06	3.26	3.11	2.46	2.41	ZZZ
99355		A	Prolonged service, office	1.77	1.23	1.13	0.62	0.57	0.06	3.06	2.96	2.45	2.40	ZZZ
99356		A	Prolonged service, inpatient	1.71	NA	NA	0.60	0.68	0.06	NA	NA	2.37	2.45	ZZZ
99357		A	Prolonged service, inpatient	1.71	NA	NA	0.62	0.70	0.06	NA	NA	2.39	2.47	ZZZ
99358		B	Prolonged serv, w/o contact	0.00	0.00	0.00	0.00	0.00	0.00	0.00	0.00	0.00	0.00	ZZZ
99359		B	Prolonged serv, w/o contact	0.00	0.00	0.00	0.00	0.00	0.00	0.00	0.00	0.00	0.00	ZZZ

[1] CPT codes and descriptions only are copyright 2000 American Medical Association. All Rights Reserved. Applicable FARS/DFARS Apply.
[2] Copyright 1994 American Dental Association. All rights reserved.
[3] + Indicates RVUs are not used for Medicare payment.
[4] PE RVUs = Practice Expense Relative Value Units.

ADDENDUM B.—RELATIVE VALUE UNITS (RVU'S) AND RELATED INFORMATION—Continued

CPT[1]/ HCPCS[2]	MOD	Status	Description	Physician Work RVUs[3]	Fully Implemented Non-Facility PE RVUs	Year 2001 Transitional Non-Facility PE RVUs	Fully Implemented Facility PE RVUs	Year 2001 Transitional Facility PE RVUs	Mal-Practice RVUs	Fully Implemented Non-Facility Total	Year 2001 Transitional Non-Facility Total	Fully Implemented Facility Total	Year 2001 Transitional Facility Total	Global
99360		X	Physician standby services	0.00	0.00	0.00	0.00	0.00	0.00	0.00	0.00	0.00	0.00	XXX
99361		B	Physician/team conference	0.00	0.00	0.00	0.00	0.00	0.00	0.00	0.00	0.00	0.00	XXX
99362		B	Physician/team conference	0.00	0.00	0.00	0.00	0.00	0.00	0.00	0.00	0.00	0.00	XXX
99371		B	Physician phone consultation	0.00	0.00	0.00	0.00	0.00	0.00	0.00	0.00	0.00	0.00	XXX
99372		B	Physician phone consultation	0.00	0.00	0.00	0.00	0.00	0.00	0.00	0.00	0.00	0.00	XXX
99373		B	Physician phone consultation	0.00	0.00	0.00	0.00	0.00	0.00	0.00	0.00	0.00	0.00	XXX
99374		B	Home health care supervision	+1.10	1.42	1.20	0.44	0.47	0.04	2.56	2.34	1.58	1.61	XXX
99375		N	Home health care supervision	0.00	0.00	0.00	0.00	0.00	0.00	0.00	0.00	0.00	0.00	XXX
99377		B	Hospice care supervision	+1.10	1.42	1.20	0.44	0.47	0.04	2.56	2.34	1.58	1.61	XXX
99378		N	Hospice care supervision	0.00	0.00	0.00	0.00	0.00	0.00	0.00	0.00	0.00	0.00	XXX
99379		B	Nursing fac care supervision	+1.10	1.42	1.20	0.44	0.47	0.03	2.55	2.33	1.57	1.60	XXX
99380		B	Nursing fac care supervision	+1.73	1.67	1.39	0.69	0.66	0.05	3.45	3.17	2.47	2.44	XXX
99381		N	Prev visit, new, infant	+1.19	1.46	1.43	0.48	0.69	0.04	2.69	2.66	1.71	1.92	XXX
99382		N	Prev visit, new, age 1-4	+1.36	1.50	1.51	0.54	0.79	0.04	2.90	2.91	1.94	2.19	XXX
99383		N	Prev visit, new, age 5-11	+1.36	1.44	1.46	0.54	0.79	0.04	2.84	2.86	1.94	2.19	XXX
99384		N	Prev visit, new, age 12-17	+1.53	1.52	1.57	0.61	0.89	0.05	3.10	3.15	2.19	2.47	XXX
99385		N	Prev visit, new, age 18-39	+1.53	1.52	1.52	0.61	0.84	0.05	3.10	3.10	2.19	2.42	XXX
99386		N	Prev visit, new, age 40-64	+1.88	1.71	1.75	0.75	1.03	0.06	3.65	3.69	2.69	2.97	XXX
99387		N	Prev visit, new, 65 & over	+2.06	1.83	1.88	0.82	1.13	0.06	3.95	4.00	2.94	3.25	XXX
99391		N	Prev visit, est, infant	+1.02	0.99	1.03	0.41	0.60	0.03	2.04	2.08	1.46	1.65	XXX
99392		N	Prev visit, est, age 1-4	+1.19	1.06	1.13	0.48	0.69	0.04	2.29	2.36	1.71	1.92	XXX
99393		N	Prev visit, est, age 5-11	+1.19	1.03	1.11	0.48	0.69	0.04	2.26	2.34	1.71	1.92	XXX
99394		N	Prev visit, est, age 12-17	+1.36	1.11	1.22	0.54	0.79	0.04	2.51	2.62	1.94	2.19	XXX
99395		N	Prev visit, est, age 18-39	+1.36	1.14	1.20	0.54	0.75	0.04	2.54	2.60	1.94	2.15	XXX
99396		N	Prev visit, est, age 40-64	+1.53	1.23	1.30	0.61	0.84	0.05	2.81	2.88	2.19	2.42	XXX
99397		N	Prev visit, est, 65 & over	+1.71	1.34	1.43	0.68	0.93	0.05	3.10	3.19	2.44	2.69	XXX
99401		N	Preventive counseling, indiv	+0.48	0.59	0.57	0.19	0.27	0.01	1.08	1.06	0.68	0.76	XXX
99402		N	Preventive counseling, indiv	+0.98	0.84	0.87	0.39	0.54	0.02	1.84	1.87	1.39	1.54	XXX
99403		N	Preventive counseling, indiv	+1.46	1.08	1.17	0.58	0.80	0.03	2.57	2.66	2.07	2.29	XXX
99404		N	Preventive counseling, indiv	+1.95	1.32	1.47	0.78	1.07	0.04	3.31	3.46	2.77	3.06	XXX
99411		N	Preventive counseling, group	+0.15	0.17	0.17	0.06	0.08	0.01	0.33	0.33	0.22	0.24	XXX
99412		N	Preventive counseling, group	+0.25	0.24	0.24	0.10	0.14	0.01	0.50	0.50	0.36	0.40	XXX
99420		N	Health risk assessment test	0.00	0.00	0.00	0.00	0.00	0.00	0.00	0.00	0.00	0.00	XXX
99429		N	Unlisted preventive service	0.00	0.00	0.00	0.00	0.00	0.00	0.00	0.00	0.00	0.00	XXX
99431		A	Initial care, normal newborn	1.17	NA	NA	0.36	0.60	0.04	NA	NA	1.57	1.81	XXX
99432		A	Newborn care, not in hosp	1.26	1.14	1.21	0.33	0.60	0.06	2.46	2.53	1.65	1.92	XXX
99433		A	Normal newborn care/hospital	0.62	NA	NA	0.20	0.32	0.02	NA	NA	0.84	0.96	XXX
99435		A	Newborn discharge day hosp	1.50	NA	NA	0.57	0.85	0.05	NA	NA	2.12	2.40	XXX
99436		A	Attendance, birth	1.50	0.60	0.87	0.46	0.77	0.05	2.15	2.42	2.01	2.32	XXX
99440		A	Newborn resuscitation	2.93	NA	NA	0.86	1.47	0.11	NA	NA	3.90	4.51	XXX
99450		N	Life/disability evaluation	0.00	0.00	0.00	0.00	0.00	0.00	0.00	0.00	0.00	0.00	XXX
99455		R	Disability examination	0.00	0.00	0.00	0.00	0.00	0.00	0.00	0.00	0.00	0.00	XXX
99456		R	Disability examination	0.00	0.00	0.00	0.00	0.00	0.00	0.00	0.00	0.00	0.00	XXX
99499		C	Unlisted e&m service	0.00	0.00	0.00	0.00	0.00	0.00	0.00	0.00	0.00	0.00	XXX
A0021		I	Outside state ambulance serv	0.00	0.00	0.00	0.00	0.00	0.00	0.00	0.00	0.00	0.00	XXX
A0030		D	Air ambulance service	0.00	0.00	0.00	0.00	0.00	0.00	0.00	0.00	0.00	0.00	XXX
A0040		D	Helicopter ambulance service	0.00	0.00	0.00	0.00	0.00	0.00	0.00	0.00	0.00	0.00	XXX
A0050		D	Water amb service emergency	0.00	0.00	0.00	0.00	0.00	0.00	0.00	0.00	0.00	0.00	XXX
A0080		I	Noninterest escort in non er	0.00	0.00	0.00	0.00	0.00	0.00	0.00	0.00	0.00	0.00	XXX
A0090		I	Interest escort in non er	0.00	0.00	0.00	0.00	0.00	0.00	0.00	0.00	0.00	0.00	XXX
A0100		I	Nonemergency transport taxi	0.00	0.00	0.00	0.00	0.00	0.00	0.00	0.00	0.00	0.00	XXX
A0110		I	Nonemergency transport bus	0.00	0.00	0.00	0.00	0.00	0.00	0.00	0.00	0.00	0.00	XXX
A0120		I	Noner transport mini-bus	0.00	0.00	0.00	0.00	0.00	0.00	0.00	0.00	0.00	0.00	XXX
A0130		I	Noner transport wheelch van	0.00	0.00	0.00	0.00	0.00	0.00	0.00	0.00	0.00	0.00	XXX
A0140		I	Nonemergency transport air	0.00	0.00	0.00	0.00	0.00	0.00	0.00	0.00	0.00	0.00	XXX
A0160		I	Noner transport case worker	0.00	0.00	0.00	0.00	0.00	0.00	0.00	0.00	0.00	0.00	XXX
A0170		I	Noner transport parking fees	0.00	0.00	0.00	0.00	0.00	0.00	0.00	0.00	0.00	0.00	XXX
A0180		I	Noner transport lodgng recip	0.00	0.00	0.00	0.00	0.00	0.00	0.00	0.00	0.00	0.00	XXX
A0190		I	Noner transport meals recip	0.00	0.00	0.00	0.00	0.00	0.00	0.00	0.00	0.00	0.00	XXX
A0200		I	Noner transport lodgng escrt	0.00	0.00	0.00	0.00	0.00	0.00	0.00	0.00	0.00	0.00	XXX
A0210		I	Noner transport meals escort	0.00	0.00	0.00	0.00	0.00	0.00	0.00	0.00	0.00	0.00	XXX
A0225		X	Neonatal emergency transport	0.00	0.00	0.00	0.00	0.00	0.00	0.00	0.00	0.00	0.00	XXX
A0300		D	Ambulance basic non-emer all	0.00	0.00	0.00	0.00	0.00	0.00	0.00	0.00	0.00	0.00	XXX
A0302		D	Ambulance basic emergeny all	0.00	0.00	0.00	0.00	0.00	0.00	0.00	0.00	0.00	0.00	XXX
A0304		D	Amb adv non-er no serv all	0.00	0.00	0.00	0.00	0.00	0.00	0.00	0.00	0.00	0.00	XXX
A0306		D	Amb adv non-er spec serv all	0.00	0.00	0.00	0.00	0.00	0.00	0.00	0.00	0.00	0.00	XXX
A0308		D	Amb adv er no spec serv all	0.00	0.00	0.00	0.00	0.00	0.00	0.00	0.00	0.00	0.00	XXX
A0310		D	Amb adv er spec serv all	0.00	0.00	0.00	0.00	0.00	0.00	0.00	0.00	0.00	0.00	XXX
A0320		D	Amb basic non-er + supplies	0.00	0.00	0.00	0.00	0.00	0.00	0.00	0.00	0.00	0.00	XXX
A0322		D	Amb basic emerg + supplies	0.00	0.00	0.00	0.00	0.00	0.00	0.00	0.00	0.00	0.00	XXX
A0324		D	Adv non-er serv sep mileage	0.00	0.00	0.00	0.00	0.00	0.00	0.00	0.00	0.00	0.00	XXX
A0326		D	Adv non-er no serv sep mile	0.00	0.00	0.00	0.00	0.00	0.00	0.00	0.00	0.00	0.00	XXX
A0328		D	Adv er no serv sep mileage	0.00	0.00	0.00	0.00	0.00	0.00	0.00	0.00	0.00	0.00	XXX
A0330		D	Adv er spec serv sep mile	0.00	0.00	0.00	0.00	0.00	0.00	0.00	0.00	0.00	0.00	XXX
A0340		D	Amb basic non-er + mileage	0.00	0.00	0.00	0.00	0.00	0.00	0.00	0.00	0.00	0.00	XXX
A0342		D	Ambul basic emer + mileage	0.00	0.00	0.00	0.00	0.00	0.00	0.00	0.00	0.00	0.00	XXX
A0344		D	Amb adv non-er no serv +mile	0.00	0.00	0.00	0.00	0.00	0.00	0.00	0.00	0.00	0.00	XXX
A0346		D	Amb adv non-er serv + mile	0.00	0.00	0.00	0.00	0.00	0.00	0.00	0.00	0.00	0.00	XXX
A0348		D	Adv emer no spec serv + mile	0.00	0.00	0.00	0.00	0.00	0.00	0.00	0.00	0.00	0.00	XXX
A0350		D	Adv emer spec serv + mileage	0.00	0.00	0.00	0.00	0.00	0.00	0.00	0.00	0.00	0.00	XXX
A0360		D	Basic non-er sep mile & supp	0.00	0.00	0.00	0.00	0.00	0.00	0.00	0.00	0.00	0.00	XXX
A0362		D	Basic emer sep mile & supply	0.00	0.00	0.00	0.00	0.00	0.00	0.00	0.00	0.00	0.00	XXX
A0364		D	Adv non-er no serv sep mi&su	0.00	0.00	0.00	0.00	0.00	0.00	0.00	0.00	0.00	0.00	XXX

[1] CPT codes and descriptions only are copyright 2000 American Medical Association. All Rights Reserved. Applicable FARS/DFARS Apply.
[2] Copyright 1994 American Dental Association. All rights reserved.
[3] + Indicates RVUs are not used for Medicare payment.
[4] PE RVUs = Practice Expense Relative Value Units.

ADDENDUM B.—RELATIVE VALUE UNITS (RVU'S) AND RELATED INFORMATION—Continued

CPT[1]/ HCPCS[2]	MOD	Status	Description	Physician Work RVUs[3]	Fully Implemented Non-Facility PE RVUs	Year 2001 Transitional Non-Facility PE RVUs	Fully Implemented Facility PE RVUs	Year 2001 Transitional Facility PE RVUs	Mal-Practice RVUs	Fully Implemented Non-Facility Total	Year 2001 Transitional Non-Facility Total	Fully Implemented Facility Total	Year 2001 Transitional Facility Total	Global
A0366		D	Adv non-er serv sep mil&supp	0.00	0.00	0.00	0.00	0.00	0.00	0.00	0.00	0.00	0.00	XXX
A0368		X	Adv er no serv sep mile&supp	0.00	0.00	0.00	0.00	0.00	0.00	0.00	0.00	0.00	0.00	XXX
A0370		D	Adv er spec serv sep mi&supp	0.00	0.00	0.00	0.00	0.00	0.00	0.00	0.00	0.00	0.00	XXX
A0380		D	Basic life support mileage	0.00	0.00	0.00	0.00	0.00	0.00	0.00	0.00	0.00	0.00	XXX
A0382		X	Basic support routine suppls	0.00	0.00	0.00	0.00	0.00	0.00	0.00	0.00	0.00	0.00	XXX
A0384		X	Bls defibrillation supplies	0.00	0.00	0.00	0.00	0.00	0.00	0.00	0.00	0.00	0.00	XXX
A0390		D	Advanced life support mileag	0.00	0.00	0.00	0.00	0.00	0.00	0.00	0.00	0.00	0.00	XXX
A0392		X	Als defibrillation supplies	0.00	0.00	0.00	0.00	0.00	0.00	0.00	0.00	0.00	0.00	XXX
A0394		X	Als IV drug therapy supplies	0.00	0.00	0.00	0.00	0.00	0.00	0.00	0.00	0.00	0.00	XXX
A0396		X	Als esophageal intub suppls	0.00	0.00	0.00	0.00	0.00	0.00	0.00	0.00	0.00	0.00	XXX
A0398		X	Als routine disposble suppls	0.00	0.00	0.00	0.00	0.00	0.00	0.00	0.00	0.00	0.00	XXX
A0420		X	Ambulance waiting 1/2 hr	0.00	0.00	0.00	0.00	0.00	0.00	0.00	0.00	0.00	0.00	XXX
A0422		X	Ambulance 02 life sustaining	0.00	0.00	0.00	0.00	0.00	0.00	0.00	0.00	0.00	0.00	XXX
A0424		X	Extra ambulance attendant	0.00	0.00	0.00	0.00	0.00	0.00	0.00	0.00	0.00	0.00	XXX
A0425		X	Ground mileage	0.00	0.00	0.00	0.00	0.00	0.00	0.00	0.00	0.00	0.00	XXX
A0426		X	Als 1	0.00	0.00	0.00	0.00	0.00	0.00	0.00	0.00	0.00	0.00	XXX
A0427		X	ALS1-emergency	0.00	0.00	0.00	0.00	0.00	0.00	0.00	0.00	0.00	0.00	XXX
A0428		X	bls	0.00	0.00	0.00	0.00	0.00	0.00	0.00	0.00	0.00	0.00	XXX
A0429		X	BLS-emergency	0.00	0.00	0.00	0.00	0.00	0.00	0.00	0.00	0.00	0.00	XXX
A0430		X	Fixed wing air transport	0.00	0.00	0.00	0.00	0.00	0.00	0.00	0.00	0.00	0.00	XXX
A0431		X	Rotary wing air transport	0.00	0.00	0.00	0.00	0.00	0.00	0.00	0.00	0.00	0.00	XXX
A0432		X	PI volunteer ambulance co	0.00	0.00	0.00	0.00	0.00	0.00	0.00	0.00	0.00	0.00	XXX
A0433		X	als 2	0.00	0.00	0.00	0.00	0.00	0.00	0.00	0.00	0.00	0.00	XXX
A0434		X	Specialty care transport	0.00	0.00	0.00	0.00	0.00	0.00	0.00	0.00	0.00	0.00	XXX
A0435		X	Fixed wing air mileage	0.00	0.00	0.00	0.00	0.00	0.00	0.00	0.00	0.00	0.00	XXX
A0436		X	Rotary wing air mileage	0.00	0.00	0.00	0.00	0.00	0.00	0.00	0.00	0.00	0.00	XXX
A0888		N	Noncovered ambulance mileage	0.00	0.00	0.00	0.00	0.00	0.00	0.00	0.00	0.00	0.00	XXX
A0999		X	Unlisted ambulance service	0.00	0.00	0.00	0.00	0.00	0.00	0.00	0.00	0.00	0.00	XXX
A4206		I	1 CC sterile syringe&needle	0.00	0.00	0.00	0.00	0.00	0.00	0.00	0.00	0.00	0.00	XXX
A4207		I	2 CC sterile syringe&needle	0.00	0.00	0.00	0.00	0.00	0.00	0.00	0.00	0.00	0.00	XXX
A4208		I	3 CC sterile syringe&needle	0.00	0.00	0.00	0.00	0.00	0.00	0.00	0.00	0.00	0.00	XXX
A4209		I	5+ CC sterile syringe&needle	0.00	0.00	0.00	0.00	0.00	0.00	0.00	0.00	0.00	0.00	XXX
A4210		N	Nonneedle injection device	0.00	0.00	0.00	0.00	0.00	0.00	0.00	0.00	0.00	0.00	XXX
A4211		P	Supp for self-adm injections	0.00	0.00	0.00	0.00	0.00	0.00	0.00	0.00	0.00	0.00	XXX
A4212		P	Non coring needle or stylet	0.00	0.00	0.00	0.00	0.00	0.00	0.00	0.00	0.00	0.00	XXX
A4213		I	20+ CC syringe only	0.00	0.00	0.00	0.00	0.00	0.00	0.00	0.00	0.00	0.00	XXX
A4214		P	30 CC sterile water/saline	0.00	0.00	0.00	0.00	0.00	0.00	0.00	0.00	0.00	0.00	XXX
A4215		I	Sterile needle	0.00	0.00	0.00	0.00	0.00	0.00	0.00	0.00	0.00	0.00	XXX
A4220		P	Infusion pump refill kit	0.00	0.00	0.00	0.00	0.00	0.00	0.00	0.00	0.00	0.00	XXX
A4221		X	Maint drug infus cath per wk	0.00	0.00	0.00	0.00	0.00	0.00	0.00	0.00	0.00	0.00	XXX
A4222		X	Drug infusion pump supplies	0.00	0.00	0.00	0.00	0.00	0.00	0.00	0.00	0.00	0.00	XXX
A4230		X	Infus insulin pump non needl	0.00	0.00	0.00	0.00	0.00	0.00	0.00	0.00	0.00	0.00	XXX
A4231		X	Infusion insulin pump needle	0.00	0.00	0.00	0.00	0.00	0.00	0.00	0.00	0.00	0.00	XXX
A4232		X	Syringe w/needle insulin 3cc	0.00	0.00	0.00	0.00	0.00	0.00	0.00	0.00	0.00	0.00	XXX
A4244		I	Alcohol or peroxide per pint	0.00	0.00	0.00	0.00	0.00	0.00	0.00	0.00	0.00	0.00	XXX
A4245		I	Alcohol wipes per box	0.00	0.00	0.00	0.00	0.00	0.00	0.00	0.00	0.00	0.00	XXX
A4246		I	Betadine/phisohex solution	0.00	0.00	0.00	0.00	0.00	0.00	0.00	0.00	0.00	0.00	XXX
A4247		I	Betadine/iodine swabs/wipes	0.00	0.00	0.00	0.00	0.00	0.00	0.00	0.00	0.00	0.00	XXX
A4250		N	Urine reagent strips/tablets	0.00	0.00	0.00	0.00	0.00	0.00	0.00	0.00	0.00	0.00	XXX
A4253		P	Blood glucose/reagent strips	0.00	0.00	0.00	0.00	0.00	0.00	0.00	0.00	0.00	0.00	XXX
A4254		X	Battery for glucose monitor	0.00	0.00	0.00	0.00	0.00	0.00	0.00	0.00	0.00	0.00	XXX
A4255		X	Glucose monitor platforms	0.00	0.00	0.00	0.00	0.00	0.00	0.00	0.00	0.00	0.00	XXX
A4256		P	Calibrator solution/chips	0.00	0.00	0.00	0.00	0.00	0.00	0.00	0.00	0.00	0.00	XXX
A4258		P	Lancet device each	0.00	0.00	0.00	0.00	0.00	0.00	0.00	0.00	0.00	0.00	XXX
A4259		P	Lancets per box	0.00	0.00	0.00	0.00	0.00	0.00	0.00	0.00	0.00	0.00	XXX
A4260		N	Levonorgestrel implant	0.00	0.00	0.00	0.00	0.00	0.00	0.00	0.00	0.00	0.00	XXX
A4261		N	Cervical cap contraceptive	0.00	0.00	0.00	0.00	0.00	0.00	0.00	0.00	0.00	0.00	XXX
A4262		B	Temporary tear duct plug	0.00	0.00	0.00	0.00	0.00	0.00	0.00	0.00	0.00	0.00	XXX
A4263		A	Permanent tear duct plug	0.00	0.00	0.26	0.00	0.26	0.00	0.00	0.26	0.00	0.26	XXX
A4265		P	Paraffin	0.00	0.00	0.00	0.00	0.00	0.00	0.00	0.00	0.00	0.00	XXX
A4270		B	Disposable endoscope sheath	0.00	0.00	0.00	0.00	0.00	0.00	0.00	0.00	0.00	0.00	XXX
A4280		X	Brst prsths adhsv attchmnt	0.00	0.00	0.00	0.00	0.00	0.00	0.00	0.00	0.00	0.00	XXX
A4290		X	Sacral nerve stim test lead	0.00	0.00	0.00	0.00	0.00	0.00	0.00	0.00	0.00	0.00	XXX
A4300		A	Cath impl vasc access portal	0.00	0.00	0.26	0.00	0.26	0.00	0.00	0.26	0.00	0.26	XXX
A4301		P	Implantable access syst perc	0.00	0.00	0.00	0.00	0.00	0.00	0.00	0.00	0.00	0.00	XXX
A4305		P	Drug delivery system >=50 ML	0.00	0.00	0.00	0.00	0.00	0.00	0.00	0.00	0.00	0.00	XXX
A4306		P	Drug delivery system <=5 ML	0.00	0.00	0.00	0.00	0.00	0.00	0.00	0.00	0.00	0.00	XXX
A4310		P	Insert tray w/o bag/cath	0.00	0.00	0.00	0.00	0.00	0.00	0.00	0.00	0.00	0.00	XXX
A4311		P	Catheter w/o bag 2-way latex	0.00	0.00	0.00	0.00	0.00	0.00	0.00	0.00	0.00	0.00	XXX
A4312		P	Cath w/o bag 2-way silicone	0.00	0.00	0.00	0.00	0.00	0.00	0.00	0.00	0.00	0.00	XXX
A4313		P	Catheter w/bag 3-way	0.00	0.00	0.00	0.00	0.00	0.00	0.00	0.00	0.00	0.00	XXX
A4314		P	Cath w/drainage 2-way latex	0.00	0.00	0.00	0.00	0.00	0.00	0.00	0.00	0.00	0.00	XXX
A4315		P	Cath w/drainage 2-way silcne	0.00	0.00	0.00	0.00	0.00	0.00	0.00	0.00	0.00	0.00	XXX
A4316		P	Cath w/drainage 3-way	0.00	0.00	0.00	0.00	0.00	0.00	0.00	0.00	0.00	0.00	XXX
A4319		X	Sterile H2O irrigation solut	0.00	0.00	0.00	0.00	0.00	0.00	0.00	0.00	0.00	0.00	XXX
A4320		P	Irrigation tray	0.00	0.00	0.00	0.00	0.00	0.00	0.00	0.00	0.00	0.00	XXX
A4321		X	Cath therapeutic irrig agent	0.00	0.00	0.00	0.00	0.00	0.00	0.00	0.00	0.00	0.00	XXX
A4322		P	Irrigation syringe	0.00	0.00	0.00	0.00	0.00	0.00	0.00	0.00	0.00	0.00	XXX
A4323		P	Saline irrigation solution	0.00	0.00	0.00	0.00	0.00	0.00	0.00	0.00	0.00	0.00	XXX
A4324		X	Male ext cath w/adh coating	0.00	0.00	0.00	0.00	0.00	0.00	0.00	0.00	0.00	0.00	XXX
A4325		X	Male ext cath w/adh strip	0.00	0.00	0.00	0.00	0.00	0.00	0.00	0.00	0.00	0.00	XXX
A4326		P	Male external catheter	0.00	0.00	0.00	0.00	0.00	0.00	0.00	0.00	0.00	0.00	XXX
A4327		P	Fem urinary collect dev cup	0.00	0.00	0.00	0.00	0.00	0.00	0.00	0.00	0.00	0.00	XXX

[1] CPT codes and descriptions only are copyright 2000 American Medical Association. All Rights Reserved. Applicable FARS/DFARS Apply.
[2] Copyright 1994 American Dental Association. All rights reserved.
[3] + Indicates RVUs are not used for Medicare payment.
[4] PE RVUs = Practice Expense Relative Value Units.

ADDENDUM B.—RELATIVE VALUE UNITS (RVU'S) AND RELATED INFORMATION—Continued

CPT[1]/ HCPCS[2]	MOD	Status	Description	Physician Work RVUs[3]	Fully Implemented Non-Facility PE RVUs	Year 2001 Transitional Non-Facility PE RVUs	Fully Implemented Facility PE RVUs	Year 2001 Transitional Facility PE RVUs	Mal-Practice RVUs	Fully Implemented Non-Facility Total	Year 2001 Transitional Non-Facility Total	Fully Implemented Facility Total	Year 2001 Transitional Facility Total	Global
A4328		P	Fem urinary collect pouch	0.00	0.00	0.00	0.00	0.00	0.00	0.00	0.00	0.00	0.00	XXX
A4329		P	External catheter start set	0.00	0.00	0.00	0.00	0.00	0.00	0.00	0.00	0.00	0.00	XXX
A4330		P	Stool collection pouch	0.00	0.00	0.00	0.00	0.00	0.00	0.00	0.00	0.00	0.00	XXX
A4331		X	Extension drainage tubing	0.00	0.00	0.00	0.00	0.00	0.00	0.00	0.00	0.00	0.00	XXX
A4332		X	Lubricant for cath insertion	0.00	0.00	0.00	0.00	0.00	0.00	0.00	0.00	0.00	0.00	XXX
A4333		X	Urinary cath anchor device	0.00	0.00	0.00	0.00	0.00	0.00	0.00	0.00	0.00	0.00	XXX
A4334		X	Urinary cath leg strap	0.00	0.00	0.00	0.00	0.00	0.00	0.00	0.00	0.00	0.00	XXX
A4335		P	Incontinence supply	0.00	0.00	0.00	0.00	0.00	0.00	0.00	0.00	0.00	0.00	XXX
A4338		P	Indwelling catheter latex	0.00	0.00	0.00	0.00	0.00	0.00	0.00	0.00	0.00	0.00	XXX
A4340		P	Indwelling catheter special	0.00	0.00	0.00	0.00	0.00	0.00	0.00	0.00	0.00	0.00	XXX
A4344		P	Cath indw foley 2 way silicn	0.00	0.00	0.00	0.00	0.00	0.00	0.00	0.00	0.00	0.00	XXX
A4346		P	Cath indw foley 3 way	0.00	0.00	0.00	0.00	0.00	0.00	0.00	0.00	0.00	0.00	XXX
A4347		P	Male external catheter	0.00	0.00	0.00	0.00	0.00	0.00	0.00	0.00	0.00	0.00	XXX
A4348		X	Male ext cath extended wear	0.00	0.00	0.00	0.00	0.00	0.00	0.00	0.00	0.00	0.00	XXX
A4351		P	Straight tip urine catheter	0.00	0.00	0.00	0.00	0.00	0.00	0.00	0.00	0.00	0.00	XXX
A4352		P	Coude tip urinary catheter	0.00	0.00	0.00	0.00	0.00	0.00	0.00	0.00	0.00	0.00	XXX
A4353		X	Intermittent urinary cath	0.00	0.00	0.00	0.00	0.00	0.00	0.00	0.00	0.00	0.00	XXX
A4354		P	Cath insertion tray w/bag	0.00	0.00	0.00	0.00	0.00	0.00	0.00	0.00	0.00	0.00	XXX
A4355		P	Bladder irrigation tubing	0.00	0.00	0.00	0.00	0.00	0.00	0.00	0.00	0.00	0.00	XXX
A4356		P	Ext ureth clmp or compr dvc	0.00	0.00	0.00	0.00	0.00	0.00	0.00	0.00	0.00	0.00	XXX
A4357		P	Bedside drainage bag	0.00	0.00	0.00	0.00	0.00	0.00	0.00	0.00	0.00	0.00	XXX
A4358		P	Urinary leg bag	0.00	0.00	0.00	0.00	0.00	0.00	0.00	0.00	0.00	0.00	XXX
A4359		P	Urinary suspensory w/o leg b	0.00	0.00	0.00	0.00	0.00	0.00	0.00	0.00	0.00	0.00	XXX
A4361		P	Ostomy face plate	0.00	0.00	0.00	0.00	0.00	0.00	0.00	0.00	0.00	0.00	XXX
A4362		P	Solid skin barrier	0.00	0.00	0.00	0.00	0.00	0.00	0.00	0.00	0.00	0.00	XXX
A4364		P	Liq adhes for facial prosth	0.00	0.00	0.00	0.00	0.00	0.00	0.00	0.00	0.00	0.00	XXX
A4365		X	Adhesive remover wipes	0.00	0.00	0.00	0.00	0.00	0.00	0.00	0.00	0.00	0.00	XXX
A4367		P	Ostomy belt	0.00	0.00	0.00	0.00	0.00	0.00	0.00	0.00	0.00	0.00	XXX
A4368		X	Ostomy filter	0.00	0.00	0.00	0.00	0.00	0.00	0.00	0.00	0.00	0.00	XXX
A4369		X	Skin barrier liquid per oz	0.00	0.00	0.00	0.00	0.00	0.00	0.00	0.00	0.00	0.00	XXX
A4370		X	Skin barrier paste per oz	0.00	0.00	0.00	0.00	0.00	0.00	0.00	0.00	0.00	0.00	XXX
A4371		X	Skin barrier powder per oz	0.00	0.00	0.00	0.00	0.00	0.00	0.00	0.00	0.00	0.00	XXX
A4372		X	Skin barrier solid 4x4 equiv	0.00	0.00	0.00	0.00	0.00	0.00	0.00	0.00	0.00	0.00	XXX
A4373		X	Skin barrier with flange	0.00	0.00	0.00	0.00	0.00	0.00	0.00	0.00	0.00	0.00	XXX
A4374		X	Skin barrier extended wear	0.00	0.00	0.00	0.00	0.00	0.00	0.00	0.00	0.00	0.00	XXX
A4375		X	Drainable plastic pch w fcpl	0.00	0.00	0.00	0.00	0.00	0.00	0.00	0.00	0.00	0.00	XXX
A4376		X	Drainable rubber pch w fcplt	0.00	0.00	0.00	0.00	0.00	0.00	0.00	0.00	0.00	0.00	XXX
A4377		X	Drainable plstic pch w/o fp	0.00	0.00	0.00	0.00	0.00	0.00	0.00	0.00	0.00	0.00	XXX
A4378		X	Drainable rubber pch w/o fp	0.00	0.00	0.00	0.00	0.00	0.00	0.00	0.00	0.00	0.00	XXX
A4379		X	Urinary plastic pouch w fcpl	0.00	0.00	0.00	0.00	0.00	0.00	0.00	0.00	0.00	0.00	XXX
A4380		X	Urinary rubber pouch w fcplt	0.00	0.00	0.00	0.00	0.00	0.00	0.00	0.00	0.00	0.00	XXX
A4381		X	Urinary plastic pouch w/o fp	0.00	0.00	0.00	0.00	0.00	0.00	0.00	0.00	0.00	0.00	XXX
A4382		X	Urinary hvy plstc pch w/o fp	0.00	0.00	0.00	0.00	0.00	0.00	0.00	0.00	0.00	0.00	XXX
A4383		X	Urinary rubber pouch w/o fp	0.00	0.00	0.00	0.00	0.00	0.00	0.00	0.00	0.00	0.00	XXX
A4384		X	Ostomy faceplt/silicone ring	0.00	0.00	0.00	0.00	0.00	0.00	0.00	0.00	0.00	0.00	XXX
A4385		X	Ost skn barrier sld ext wear	0.00	0.00	0.00	0.00	0.00	0.00	0.00	0.00	0.00	0.00	XXX
A4386		X	Ost skn barrier w flng ex wr	0.00	0.00	0.00	0.00	0.00	0.00	0.00	0.00	0.00	0.00	XXX
A4387		X	Ost clsd pouch w att st barr	0.00	0.00	0.00	0.00	0.00	0.00	0.00	0.00	0.00	0.00	XXX
A4388		X	Drainable pch w ex wear barr	0.00	0.00	0.00	0.00	0.00	0.00	0.00	0.00	0.00	0.00	XXX
A4389		X	Drainable pch w st wear barr	0.00	0.00	0.00	0.00	0.00	0.00	0.00	0.00	0.00	0.00	XXX
A4390		X	Drainable pch ex wear convex	0.00	0.00	0.00	0.00	0.00	0.00	0.00	0.00	0.00	0.00	XXX
A4391		X	Urinary pouch w ex wear barr	0.00	0.00	0.00	0.00	0.00	0.00	0.00	0.00	0.00	0.00	XXX
A4392		X	Urinary pouch w st wear barr	0.00	0.00	0.00	0.00	0.00	0.00	0.00	0.00	0.00	0.00	XXX
A4393		X	Urine pch w ex wear bar conv	0.00	0.00	0.00	0.00	0.00	0.00	0.00	0.00	0.00	0.00	XXX
A4394		X	Ostomy pouch liq deodorant	0.00	0.00	0.00	0.00	0.00	0.00	0.00	0.00	0.00	0.00	XXX
A4395		X	Ostomy pouch solid deodorant	0.00	0.00	0.00	0.00	0.00	0.00	0.00	0.00	0.00	0.00	XXX
A4396		X	Peristomal hernia supprt blt	0.00	0.00	0.00	0.00	0.00	0.00	0.00	0.00	0.00	0.00	XXX
A4397		P	Irrigation supply sleeve	0.00	0.00	0.00	0.00	0.00	0.00	0.00	0.00	0.00	0.00	XXX
A4398		P	Ostomy irrigation bag	0.00	0.00	0.00	0.00	0.00	0.00	0.00	0.00	0.00	0.00	XXX
A4399		P	Ostomy irrig cone/cath w brs	0.00	0.00	0.00	0.00	0.00	0.00	0.00	0.00	0.00	0.00	XXX
A4400		P	Ostomy irrigation set	0.00	0.00	0.00	0.00	0.00	0.00	0.00	0.00	0.00	0.00	XXX
A4402		P	Lubricant per ounce	0.00	0.00	0.00	0.00	0.00	0.00	0.00	0.00	0.00	0.00	XXX
A4404		P	Ostomy ring each	0.00	0.00	0.00	0.00	0.00	0.00	0.00	0.00	0.00	0.00	XXX
A4421		P	Ostomy supply misc	0.00	0.00	0.00	0.00	0.00	0.00	0.00	0.00	0.00	0.00	XXX
A4454		P	Tape all types all sizes	0.00	0.00	0.00	0.00	0.00	0.00	0.00	0.00	0.00	0.00	XXX
A4455		P	Adhesive remover per ounce	0.00	0.00	0.00	0.00	0.00	0.00	0.00	0.00	0.00	0.00	XXX
A4460		P	Elastic compression bandage	0.00	0.00	0.00	0.00	0.00	0.00	0.00	0.00	0.00	0.00	XXX
A4462		X	Abdmnl drssng holder/binder	0.00	0.00	0.00	0.00	0.00	0.00	0.00	0.00	0.00	0.00	XXX
A4464		N	Joint support device/garment	0.00	0.00	0.00	0.00	0.00	0.00	0.00	0.00	0.00	0.00	XXX
A4465		P	Non-elastic extremity binder	0.00	0.00	0.00	0.00	0.00	0.00	0.00	0.00	0.00	0.00	XXX
A4470		P	Gravlee jet washer	0.00	0.00	0.00	0.00	0.00	0.00	0.00	0.00	0.00	0.00	XXX
A4480		P	Vabra aspirator	0.00	0.00	0.00	0.00	0.00	0.00	0.00	0.00	0.00	0.00	XXX
A4481		X	Tracheostoma filter	0.00	0.00	0.00	0.00	0.00	0.00	0.00	0.00	0.00	0.00	XXX
A4483		X	Moisture exchanger	0.00	0.00	0.00	0.00	0.00	0.00	0.00	0.00	0.00	0.00	XXX
A4490		N	Above knee surgical stocking	0.00	0.00	0.00	0.00	0.00	0.00	0.00	0.00	0.00	0.00	XXX
A4495		N	Thigh length surg stocking	0.00	0.00	0.00	0.00	0.00	0.00	0.00	0.00	0.00	0.00	XXX
A4500		N	Below knee surgical stocking	0.00	0.00	0.00	0.00	0.00	0.00	0.00	0.00	0.00	0.00	XXX
A4510		N	Full length surg stocking	0.00	0.00	0.00	0.00	0.00	0.00	0.00	0.00	0.00	0.00	XXX
A4550		A	Surgical trays	0.00	0.00	0.26	0.00	0.26	0.00	0.00	0.26	0.00	0.26	XXX
A4554		N	Disposable underpads	0.00	0.00	0.00	0.00	0.00	0.00	0.00	0.00	0.00	0.00	XXX
A4556		P	Electrodes, pair	0.00	0.00	0.00	0.00	0.00	0.00	0.00	0.00	0.00	0.00	XXX
A4557		P	Lead wires, pair	0.00	0.00	0.00	0.00	0.00	0.00	0.00	0.00	0.00	0.00	XXX
A4558		P	Conductive paste or gel	0.00	0.00	0.00	0.00	0.00	0.00	0.00	0.00	0.00	0.00	XXX

[1] CPT codes and descriptions only are copyright 2000 American Medical Association. All Rights Reserved. Applicable FARS/DFARS Apply.
[2] Copyright 1994 American Dental Association. All rights reserved.
[3] + Indicates RVUs are not used for Medicare payment.
[4] PE RVUs = Practice Expense Relative Value Units.

ADDENDUM B.—RELATIVE VALUE UNITS (RVU'S) AND RELATED INFORMATION—Continued

CPT[1]/ HCPCS[2]	MOD	Status	Description	Physician Work RVUs[3]	Fully Implemented Non-Facility PE RVUs	Year 2001 Transitional Non-Facility PE RVUs	Fully Implemented Facility PE RVUs	Year 2001 Transitional Facility PE RVUs	Mal-Practice RVUs	Fully Implemented Non-Facility Total	Year 2001 Transitional Non-Facility Total	Fully Implemented Facility Total	Year 2001 Transitional Facility Total	Global
A4560		D	Pessary	0.00	0.00	0.00	0.00	0.00	0.00	0.00	0.00	0.00	0.00	XXX
A4561		X	Pessary rubber, any type	0.00	0.00	0.00	0.00	0.00	0.00	0.00	0.00	0.00	0.00	XXX
A4562		X	Pessary, non rubber,any type	0.00	0.00	0.00	0.00	0.00	0.00	0.00	0.00	0.00	0.00	XXX
A4565		X	Slings	0.00	0.00	0.00	0.00	0.00	0.00	0.00	0.00	0.00	0.00	XXX
A4570		X	Splint	0.00	0.00	0.00	0.00	0.00	0.00	0.00	0.00	0.00	0.00	XXX
A4572		X	Rib belt	0.00	0.00	0.00	0.00	0.00	0.00	0.00	0.00	0.00	0.00	XXX
A4575		N	Hyperbaric o2 chamber disps	0.00	0.00	0.00	0.00	0.00	0.00	0.00	0.00	0.00	0.00	XXX
A4580		X	Cast supplies (plaster)	0.00	0.00	0.00	0.00	0.00	0.00	0.00	0.00	0.00	0.00	XXX
A4590		X	Special casting material	0.00	0.00	0.00	0.00	0.00	0.00	0.00	0.00	0.00	0.00	XXX
A4595		X	TENS suppl 2 lead per month	0.00	0.00	0.00	0.00	0.00	0.00	0.00	0.00	0.00	0.00	XXX
A4608		X	Transtracheal oxygen cath	0.00	0.00	0.00	0.00	0.00	0.00	0.00	0.00	0.00	0.00	XXX
A4611		X	Heavy duty battery	0.00	0.00	0.00	0.00	0.00	0.00	0.00	0.00	0.00	0.00	XXX
A4612		X	Battery cables	0.00	0.00	0.00	0.00	0.00	0.00	0.00	0.00	0.00	0.00	XXX
A4613		X	Battery charger	0.00	0.00	0.00	0.00	0.00	0.00	0.00	0.00	0.00	0.00	XXX
A4614		X	Hand-held PEFR meter	0.00	0.00	0.00	0.00	0.00	0.00	0.00	0.00	0.00	0.00	XXX
A4615		X	Cannula nasal	0.00	0.00	0.00	0.00	0.00	0.00	0.00	0.00	0.00	0.00	XXX
A4616		X	Tubing (oxygen) per foot	0.00	0.00	0.00	0.00	0.00	0.00	0.00	0.00	0.00	0.00	XXX
A4617		X	Mouth piece	0.00	0.00	0.00	0.00	0.00	0.00	0.00	0.00	0.00	0.00	XXX
A4618		X	Breathing circuits	0.00	0.00	0.00	0.00	0.00	0.00	0.00	0.00	0.00	0.00	XXX
A4619		X	Face tent	0.00	0.00	0.00	0.00	0.00	0.00	0.00	0.00	0.00	0.00	XXX
A4620		X	Variable concentration mask	0.00	0.00	0.00	0.00	0.00	0.00	0.00	0.00	0.00	0.00	XXX
A4621		X	Tracheotomy mask or collar	0.00	0.00	0.00	0.00	0.00	0.00	0.00	0.00	0.00	0.00	XXX
A4622		X	Tracheostomy or larngectomy	0.00	0.00	0.00	0.00	0.00	0.00	0.00	0.00	0.00	0.00	XXX
A4623		X	Tracheostomy inner cannula	0.00	0.00	0.00	0.00	0.00	0.00	0.00	0.00	0.00	0.00	XXX
A4624		X	Tracheal suction tube	0.00	0.00	0.00	0.00	0.00	0.00	0.00	0.00	0.00	0.00	XXX
A4625		X	Trach care kit for new trach	0.00	0.00	0.00	0.00	0.00	0.00	0.00	0.00	0.00	0.00	XXX
A4626		X	Tracheostomy cleaning brush	0.00	0.00	0.00	0.00	0.00	0.00	0.00	0.00	0.00	0.00	XXX
A4627		N	Spacer bag/reservoir	0.00	0.00	0.00	0.00	0.00	0.00	0.00	0.00	0.00	0.00	XXX
A4628		X	Oropharyngeal suction cath	0.00	0.00	0.00	0.00	0.00	0.00	0.00	0.00	0.00	0.00	XXX
A4629		X	Tracheostomy care kit	0.00	0.00	0.00	0.00	0.00	0.00	0.00	0.00	0.00	0.00	XXX
A4630		X	Repl bat t.e.n.s. own by pt	0.00	0.00	0.00	0.00	0.00	0.00	0.00	0.00	0.00	0.00	XXX
A4631		X	Wheelchair battery	0.00	0.00	0.00	0.00	0.00	0.00	0.00	0.00	0.00	0.00	XXX
A4635		X	Underarm crutch pad	0.00	0.00	0.00	0.00	0.00	0.00	0.00	0.00	0.00	0.00	XXX
A4636		X	Handgrip for cane etc	0.00	0.00	0.00	0.00	0.00	0.00	0.00	0.00	0.00	0.00	XXX
A4637		X	Repl tip cane/crutch/walker	0.00	0.00	0.00	0.00	0.00	0.00	0.00	0.00	0.00	0.00	XXX
A4640		X	Alternating pressure pad	0.00	0.00	0.00	0.00	0.00	0.00	0.00	0.00	0.00	0.00	XXX
A4641		E	Diagnostic imaging agent	0.00	0.00	0.00	0.00	0.00	0.00	0.00	0.00	0.00	0.00	XXX
A4642		E	Satumomab pendetide per dose	0.00	0.00	0.00	0.00	0.00	0.00	0.00	0.00	0.00	0.00	XXX
A4643		E	High dose contrast MRI	0.00	0.00	0.00	0.00	0.00	0.00	0.00	0.00	0.00	0.00	XXX
A4644		E	Contrast 100-199 MGs iodine	0.00	0.00	0.00	0.00	0.00	0.00	0.00	0.00	0.00	0.00	XXX
A4645		E	Contrast 200-299 MGs iodine	0.00	0.00	0.00	0.00	0.00	0.00	0.00	0.00	0.00	0.00	XXX
A4646		E	Contrast 300-399 MGs iodine	0.00	0.00	0.00	0.00	0.00	0.00	0.00	0.00	0.00	0.00	XXX
A4647		B	Supp- paramagnetic contr mat	0.00	0.00	0.00	0.00	0.00	0.00	0.00	0.00	0.00	0.00	XXX
A4649		P	Surgical supplies	0.00	0.00	0.00	0.00	0.00	0.00	0.00	0.00	0.00	0.00	XXX
A4650		X	Supp esrd centrifuge	0.00	0.00	0.00	0.00	0.00	0.00	0.00	0.00	0.00	0.00	XXX
A4655		X	Esrd syringe/needle	0.00	0.00	0.00	0.00	0.00	0.00	0.00	0.00	0.00	0.00	XXX
A4660		X	Esrd blood pressure device	0.00	0.00	0.00	0.00	0.00	0.00	0.00	0.00	0.00	0.00	XXX
A4663		X	Esrd blood pressure cuff	0.00	0.00	0.00	0.00	0.00	0.00	0.00	0.00	0.00	0.00	XXX
A4670		N	Auto blood pressure monitor	0.00	0.00	0.00	0.00	0.00	0.00	0.00	0.00	0.00	0.00	XXX
A4680		X	Activated carbon filters	0.00	0.00	0.00	0.00	0.00	0.00	0.00	0.00	0.00	0.00	XXX
A4690		X	Dialyzers	0.00	0.00	0.00	0.00	0.00	0.00	0.00	0.00	0.00	0.00	XXX
A4700		X	Standard dialysate solution	0.00	0.00	0.00	0.00	0.00	0.00	0.00	0.00	0.00	0.00	XXX
A4705		X	Bicarb dialysate solution	0.00	0.00	0.00	0.00	0.00	0.00	0.00	0.00	0.00	0.00	XXX
A4712		X	Sterile water	0.00	0.00	0.00	0.00	0.00	0.00	0.00	0.00	0.00	0.00	XXX
A4714		X	Treated water for dialysis	0.00	0.00	0.00	0.00	0.00	0.00	0.00	0.00	0.00	0.00	XXX
A4730		X	Fistula cannulation set dial	0.00	0.00	0.00	0.00	0.00	0.00	0.00	0.00	0.00	0.00	XXX
A4735		X	Local/topical anesthetics	0.00	0.00	0.00	0.00	0.00	0.00	0.00	0.00	0.00	0.00	XXX
A4740		X	Esrd shunt accessory	0.00	0.00	0.00	0.00	0.00	0.00	0.00	0.00	0.00	0.00	XXX
A4750		X	Arterial or venous tubing	0.00	0.00	0.00	0.00	0.00	0.00	0.00	0.00	0.00	0.00	XXX
A4755		X	Arterial and venous tubing	0.00	0.00	0.00	0.00	0.00	0.00	0.00	0.00	0.00	0.00	XXX
A4760		X	Standard testing solution	0.00	0.00	0.00	0.00	0.00	0.00	0.00	0.00	0.00	0.00	XXX
A4765		X	Dialysate concentrate	0.00	0.00	0.00	0.00	0.00	0.00	0.00	0.00	0.00	0.00	XXX
A4770		X	Blood testing supplies	0.00	0.00	0.00	0.00	0.00	0.00	0.00	0.00	0.00	0.00	XXX
A4771		X	Blood clotting time tube	0.00	0.00	0.00	0.00	0.00	0.00	0.00	0.00	0.00	0.00	XXX
A4772		X	Dextrostick/glucose strips	0.00	0.00	0.00	0.00	0.00	0.00	0.00	0.00	0.00	0.00	XXX
A4773		X	Hemostix	0.00	0.00	0.00	0.00	0.00	0.00	0.00	0.00	0.00	0.00	XXX
A4774		X	Ammonia test paper	0.00	0.00	0.00	0.00	0.00	0.00	0.00	0.00	0.00	0.00	XXX
A4780		X	Esrd sterilizing agent	0.00	0.00	0.00	0.00	0.00	0.00	0.00	0.00	0.00	0.00	XXX
A4790		X	Esrd cleansing agents	0.00	0.00	0.00	0.00	0.00	0.00	0.00	0.00	0.00	0.00	XXX
A4800		X	Heparin/antidote dialysis	0.00	0.00	0.00	0.00	0.00	0.00	0.00	0.00	0.00	0.00	XXX
A4820		X	Supplies hemodialysis kit	0.00	0.00	0.00	0.00	0.00	0.00	0.00	0.00	0.00	0.00	XXX
A4850		X	Rubber tipped hemostats	0.00	0.00	0.00	0.00	0.00	0.00	0.00	0.00	0.00	0.00	XXX
A4860		X	Disposable catheter caps	0.00	0.00	0.00	0.00	0.00	0.00	0.00	0.00	0.00	0.00	XXX
A4870		X	Plumbing/electrical work	0.00	0.00	0.00	0.00	0.00	0.00	0.00	0.00	0.00	0.00	XXX
A4880		X	Water storage tanks	0.00	0.00	0.00	0.00	0.00	0.00	0.00	0.00	0.00	0.00	XXX
A4890		R	Contracts/repair/maintenance	0.00	0.00	0.00	0.00	0.00	0.00	0.00	0.00	0.00	0.00	XXX
A4900		X	Capd supply kit	0.00	0.00	0.00	0.00	0.00	0.00	0.00	0.00	0.00	0.00	XXX
A4901		X	Ccpd supply kit	0.00	0.00	0.00	0.00	0.00	0.00	0.00	0.00	0.00	0.00	XXX
A4905		X	Ipd supply kit	0.00	0.00	0.00	0.00	0.00	0.00	0.00	0.00	0.00	0.00	XXX
A4910		X	Esrd nonmedical supplies	0.00	0.00	0.00	0.00	0.00	0.00	0.00	0.00	0.00	0.00	XXX
A4912		X	Gomco drain bottle	0.00	0.00	0.00	0.00	0.00	0.00	0.00	0.00	0.00	0.00	XXX
A4913		X	Esrd supply	0.00	0.00	0.00	0.00	0.00	0.00	0.00	0.00	0.00	0.00	XXX
A4914		X	Preparation kit	0.00	0.00	0.00	0.00	0.00	0.00	0.00	0.00	0.00	0.00	XXX

[1] CPT codes and descriptions only are copyright 2000 American Medical Association. All Rights Reserved. Applicable FARS/DFARS Apply.
[2] Copyright 1994 American Dental Association. All rights reserved.
[3] + Indicates RVUs are not used for Medicare payment.
[4] PE RVUs = Practice Expense Relative Value Units.

ADDENDUM B.—RELATIVE VALUE UNITS (RVU'S) AND RELATED INFORMATION—Continued

CPT[1]/ HCPCS[2]	MOD	Status	Description	Physician Work RVUs[3]	Fully Implemented Non-Facility PE RVUs	Year 2001 Transitional Non-Facility PE RVUs	Fully Implemented Facility PE RVUs	Year 2001 Transitional Facility PE RVUs	Mal-Practice RVUs	Fully Implemented Non-Facility Total	Year 2001 Transitional Non-Facility Total	Fully Implemented Facility Total	Year 2001 Transitional Facility Total	Global
A4918		X	Venous pressure clamp	0.00	0.00	0.00	0.00	0.00	0.00	0.00	0.00	0.00	0.00	XXX
A4919		X	Supp dialysis dialyzer holde	0.00	0.00	0.00	0.00	0.00	0.00	0.00	0.00	0.00	0.00	XXX
A4920		X	Harvard pressure clamp	0.00	0.00	0.00	0.00	0.00	0.00	0.00	0.00	0.00	0.00	XXX
A4921		X	Measuring cylinder	0.00	0.00	0.00	0.00	0.00	0.00	0.00	0.00	0.00	0.00	XXX
A4927		X	Gloves	0.00	0.00	0.00	0.00	0.00	0.00	0.00	0.00	0.00	0.00	XXX
A5051		P	Pouch clsd w barr attached	0.00	0.00	0.00	0.00	0.00	0.00	0.00	0.00	0.00	0.00	XXX
A5052		P	Clsd ostomy pouch w/o barr	0.00	0.00	0.00	0.00	0.00	0.00	0.00	0.00	0.00	0.00	XXX
A5053		P	Clsd ostomy pouch faceplate	0.00	0.00	0.00	0.00	0.00	0.00	0.00	0.00	0.00	0.00	XXX
A5054		P	Clsd ostomy pouch w/flange	0.00	0.00	0.00	0.00	0.00	0.00	0.00	0.00	0.00	0.00	XXX
A5055		P	Stoma cap	0.00	0.00	0.00	0.00	0.00	0.00	0.00	0.00	0.00	0.00	XXX
A5061		P	Pouch drainable w barrier at	0.00	0.00	0.00	0.00	0.00	0.00	0.00	0.00	0.00	0.00	XXX
A5062		P	Drnble ostomy pouch w/o barr	0.00	0.00	0.00	0.00	0.00	0.00	0.00	0.00	0.00	0.00	XXX
A5063		P	Drain ostomy pouch w/flange	0.00	0.00	0.00	0.00	0.00	0.00	0.00	0.00	0.00	0.00	XXX
A5064		I	Drain ostomy pouch w/fceplte	0.00	0.00	0.00	0.00	0.00	0.00	0.00	0.00	0.00	0.00	XXX
A5065		D	Drain ostomy pouch on fcplte	0.00	0.00	0.00	0.00	0.00	0.00	0.00	0.00	0.00	0.00	XXX
A5071		P	Urinary pouch w/barrier	0.00	0.00	0.00	0.00	0.00	0.00	0.00	0.00	0.00	0.00	XXX
A5072		P	Urinary pouch w/o barrier	0.00	0.00	0.00	0.00	0.00	0.00	0.00	0.00	0.00	0.00	XXX
A5073		P	Urinary pouch on barr w/flng	0.00	0.00	0.00	0.00	0.00	0.00	0.00	0.00	0.00	0.00	XXX
A5074		I	Urinary pouch w/faceplate	0.00	0.00	0.00	0.00	0.00	0.00	0.00	0.00	0.00	0.00	XXX
A5075		I	Urinary pouch on faceplate	0.00	0.00	0.00	0.00	0.00	0.00	0.00	0.00	0.00	0.00	XXX
A5081		P	Continent stoma plug	0.00	0.00	0.00	0.00	0.00	0.00	0.00	0.00	0.00	0.00	XXX
A5082		P	Continent stoma catheter	0.00	0.00	0.00	0.00	0.00	0.00	0.00	0.00	0.00	0.00	XXX
A5093		P	Ostomy accessory convex inse	0.00	0.00	0.00	0.00	0.00	0.00	0.00	0.00	0.00	0.00	XXX
A5102		P	Bedside drain btl w/wo tube	0.00	0.00	0.00	0.00	0.00	0.00	0.00	0.00	0.00	0.00	XXX
A5105		P	Urinary suspensory	0.00	0.00	0.00	0.00	0.00	0.00	0.00	0.00	0.00	0.00	XXX
A5112		P	Urinary leg bag	0.00	0.00	0.00	0.00	0.00	0.00	0.00	0.00	0.00	0.00	XXX
A5113		P	Latex leg strap	0.00	0.00	0.00	0.00	0.00	0.00	0.00	0.00	0.00	0.00	XXX
A5114		P	Foam/fabric leg strap	0.00	0.00	0.00	0.00	0.00	0.00	0.00	0.00	0.00	0.00	XXX
A5119		P	Skin barrier wipes box pr 50	0.00	0.00	0.00	0.00	0.00	0.00	0.00	0.00	0.00	0.00	XXX
A5121		P	Solid skin barrier 6x6	0.00	0.00	0.00	0.00	0.00	0.00	0.00	0.00	0.00	0.00	XXX
A5122		P	Solid skin barrier 8x8	0.00	0.00	0.00	0.00	0.00	0.00	0.00	0.00	0.00	0.00	XXX
A5123		P	Skin barrier with flange	0.00	0.00	0.00	0.00	0.00	0.00	0.00	0.00	0.00	0.00	XXX
A5126		P	Disk/foam pad +or- adhesive	0.00	0.00	0.00	0.00	0.00	0.00	0.00	0.00	0.00	0.00	XXX
A5131		P	Appliance cleaner	0.00	0.00	0.00	0.00	0.00	0.00	0.00	0.00	0.00	0.00	XXX
A5149		D	Incontinence/ostomy supply	0.00	0.00	0.00	0.00	0.00	0.00	0.00	0.00	0.00	0.00	XXX
A5200		X	Percutaneous catheter anchor	0.00	0.00	0.00	0.00	0.00	0.00	0.00	0.00	0.00	0.00	XXX
A5500		X	Diab shoe for density insert	0.00	0.00	0.00	0.00	0.00	0.00	0.00	0.00	0.00	0.00	XXX
A5501		X	Diabetic custom molded shoe	0.00	0.00	0.00	0.00	0.00	0.00	0.00	0.00	0.00	0.00	XXX
A5502		X	Diabetic shoe density insert	0.00	0.00	0.00	0.00	0.00	0.00	0.00	0.00	0.00	0.00	XXX
A5503		X	Diabetic shoe w/roller/rockr	0.00	0.00	0.00	0.00	0.00	0.00	0.00	0.00	0.00	0.00	XXX
A5504		X	Diabetic shoe with wedge	0.00	0.00	0.00	0.00	0.00	0.00	0.00	0.00	0.00	0.00	XXX
A5505		X	Diab shoe w/metatarsal bar	0.00	0.00	0.00	0.00	0.00	0.00	0.00	0.00	0.00	0.00	XXX
A5506		X	Diabetic shoe w/off set heel	0.00	0.00	0.00	0.00	0.00	0.00	0.00	0.00	0.00	0.00	XXX
A5507		X	Modification diabetic shoe	0.00	0.00	0.00	0.00	0.00	0.00	0.00	0.00	0.00	0.00	XXX
A5508		X	Diabetic deluxe shoe	0.00	0.00	0.00	0.00	0.00	0.00	0.00	0.00	0.00	0.00	XXX
A6020		P	Collagen wound dressing	0.00	0.00	0.00	0.00	0.00	0.00	0.00	0.00	0.00	0.00	XXX
A6021		X	Collagen dressing <=16 sq in	0.00	0.00	0.00	0.00	0.00	0.00	0.00	0.00	0.00	0.00	XXX
A6022		X	Collagen drsg>6<=48 sq in	0.00	0.00	0.00	0.00	0.00	0.00	0.00	0.00	0.00	0.00	XXX
A6023		X	Collagen dressing >48 sq in	0.00	0.00	0.00	0.00	0.00	0.00	0.00	0.00	0.00	0.00	XXX
A6024		X	Collagen dsg wound filler	0.00	0.00	0.00	0.00	0.00	0.00	0.00	0.00	0.00	0.00	XXX
A6025		I	Silicone gel sheet, each	0.00	0.00	0.00	0.00	0.00	0.00	0.00	0.00	0.00	0.00	XXX
A6154		P	Wound pouch each	0.00	0.00	0.00	0.00	0.00	0.00	0.00	0.00	0.00	0.00	XXX
A6196		P	Alginate dressing <=16 sq in	0.00	0.00	0.00	0.00	0.00	0.00	0.00	0.00	0.00	0.00	XXX
A6197		P	Alginate drsg >16 <=48 sq in	0.00	0.00	0.00	0.00	0.00	0.00	0.00	0.00	0.00	0.00	XXX
A6198		P	alginate dressing > 48 sq in	0.00	0.00	0.00	0.00	0.00	0.00	0.00	0.00	0.00	0.00	XXX
A6199		P	Alginate drsg wound filler	0.00	0.00	0.00	0.00	0.00	0.00	0.00	0.00	0.00	0.00	XXX
A6200		X	Compos drsg <=16 no border	0.00	0.00	0.00	0.00	0.00	0.00	0.00	0.00	0.00	0.00	XXX
A6201		X	Compos drsg >16<=48 no bdr	0.00	0.00	0.00	0.00	0.00	0.00	0.00	0.00	0.00	0.00	XXX
A6202		X	Compos drsg >48 no border	0.00	0.00	0.00	0.00	0.00	0.00	0.00	0.00	0.00	0.00	XXX
A6203		P	Composite drsg <= 16 sq in	0.00	0.00	0.00	0.00	0.00	0.00	0.00	0.00	0.00	0.00	XXX
A6204		P	Composite drsg >16<=48 sq in	0.00	0.00	0.00	0.00	0.00	0.00	0.00	0.00	0.00	0.00	XXX
A6205		P	Composite drsg > 48 sq in	0.00	0.00	0.00	0.00	0.00	0.00	0.00	0.00	0.00	0.00	XXX
A6206		P	Contact layer <= 16 sq in	0.00	0.00	0.00	0.00	0.00	0.00	0.00	0.00	0.00	0.00	XXX
A6207		P	Contact layer >16<= 48 sq in	0.00	0.00	0.00	0.00	0.00	0.00	0.00	0.00	0.00	0.00	XXX
A6208		P	Contact layer > 48 sq in	0.00	0.00	0.00	0.00	0.00	0.00	0.00	0.00	0.00	0.00	XXX
A6209		P	Foam drsg <=16 sq in w/o bdr	0.00	0.00	0.00	0.00	0.00	0.00	0.00	0.00	0.00	0.00	XXX
A6210		P	Foam drg >16<=48 sq in w/o b	0.00	0.00	0.00	0.00	0.00	0.00	0.00	0.00	0.00	0.00	XXX
A6211		P	Foam drg > 48 sq in w/o brdr	0.00	0.00	0.00	0.00	0.00	0.00	0.00	0.00	0.00	0.00	XXX
A6212		P	Foam drg <=16 sq in w/border	0.00	0.00	0.00	0.00	0.00	0.00	0.00	0.00	0.00	0.00	XXX
A6213		P	Foam drg >16<=48 sq in w/bdr	0.00	0.00	0.00	0.00	0.00	0.00	0.00	0.00	0.00	0.00	XXX
A6214		P	Foam drg > 48 sq in w/border	0.00	0.00	0.00	0.00	0.00	0.00	0.00	0.00	0.00	0.00	XXX
A6215		P	Foam dressing wound filler	0.00	0.00	0.00	0.00	0.00	0.00	0.00	0.00	0.00	0.00	XXX
A6216		P	Non-sterile gauze<=16 sq in	0.00	0.00	0.00	0.00	0.00	0.00	0.00	0.00	0.00	0.00	XXX
A6217		P	Non-sterile gauze>16<=48 sq	0.00	0.00	0.00	0.00	0.00	0.00	0.00	0.00	0.00	0.00	XXX
A6218		P	Non-sterile gauze > 48 sq in	0.00	0.00	0.00	0.00	0.00	0.00	0.00	0.00	0.00	0.00	XXX
A6219		P	Gauze <= 16 sq in w/border	0.00	0.00	0.00	0.00	0.00	0.00	0.00	0.00	0.00	0.00	XXX
A6220		P	Gauze >16 <=48 sq in w/bordr	0.00	0.00	0.00	0.00	0.00	0.00	0.00	0.00	0.00	0.00	XXX
A6221		P	Gauze > 48 sq in w/border	0.00	0.00	0.00	0.00	0.00	0.00	0.00	0.00	0.00	0.00	XXX
A6222		P	Gauze <=16 in no w/sal w/o b	0.00	0.00	0.00	0.00	0.00	0.00	0.00	0.00	0.00	0.00	XXX
A6223		P	Gauze >16<=48 no w/sal w/o b	0.00	0.00	0.00	0.00	0.00	0.00	0.00	0.00	0.00	0.00	XXX
A6224		P	Gauze > 48 in no w/sal w/o b	0.00	0.00	0.00	0.00	0.00	0.00	0.00	0.00	0.00	0.00	XXX
A6228		P	Gauze <= 16 sq in water/sal	0.00	0.00	0.00	0.00	0.00	0.00	0.00	0.00	0.00	0.00	XXX
A6229		P	Gauze >16<=48 sq in watr/sal	0.00	0.00	0.00	0.00	0.00	0.00	0.00	0.00	0.00	0.00	XXX

[1] CPT codes and descriptions only are copyright 2000 American Medical Association. All Rights Reserved. Applicable FARS/DFARS Apply.
[2] Copyright 1994 American Dental Association. All rights reserved.
[3] + Indicates RVUs are not used for Medicare payment.
[4] PE RVUs = Practice Expense Relative Value Units.

ADDENDUM B.—RELATIVE VALUE UNITS (RVU'S) AND RELATED INFORMATION—Continued

CPT[1]/ HCPCS[2]	MOD	Status	Description	Physician Work RVUs[3]	Fully Implemented Non-Facility PE RVUs	Year 2001 Transitional Non-Facility PE RVUs	Fully Implemented Facility PE RVUs	Year 2001 Transitional Facility PE RVUs	Mal-Practice RVUs	Fully Implemented Non-Facility Total	Year 2001 Transitional Non-Facility Total	Fully Implemented Facility Total	Year 2001 Transitional Facility Total	Global
A6230		P	Gauze > 48 sq in water/salne	0.00	0.00	0.00	0.00	0.00	0.00	0.00	0.00	0.00	0.00	XXX
A6231		X	Hydrogel dsg<=16 sq in	0.00	0.00	0.00	0.00	0.00	0.00	0.00	0.00	0.00	0.00	XXX
A6232		X	Hydrogel dsg>16<=48 sq in	0.00	0.00	0.00	0.00	0.00	0.00	0.00	0.00	0.00	0.00	XXX
A6233		X	Hydrogel dressing >48 sq in	0.00	0.00	0.00	0.00	0.00	0.00	0.00	0.00	0.00	0.00	XXX
A6234		P	Hydrocolld drg <=16 w/o bdr	0.00	0.00	0.00	0.00	0.00	0.00	0.00	0.00	0.00	0.00	XXX
A6235		P	Hydrocolld drg >16<=48 w/o b	0.00	0.00	0.00	0.00	0.00	0.00	0.00	0.00	0.00	0.00	XXX
A6236		P	Hydrocolld drg > 48 in w/o b	0.00	0.00	0.00	0.00	0.00	0.00	0.00	0.00	0.00	0.00	XXX
A6237		P	Hydrocolld drg <=16 in w/bdr	0.00	0.00	0.00	0.00	0.00	0.00	0.00	0.00	0.00	0.00	XXX
A6238		P	Hydrocolld drg >16<=48 w/bdr	0.00	0.00	0.00	0.00	0.00	0.00	0.00	0.00	0.00	0.00	XXX
A6239		P	Hydrocolld drg > 48 in w/bdr	0.00	0.00	0.00	0.00	0.00	0.00	0.00	0.00	0.00	0.00	XXX
A6240		P	Hydrocolld drg filler paste	0.00	0.00	0.00	0.00	0.00	0.00	0.00	0.00	0.00	0.00	XXX
A6241		P	Hydrocolloid drg filler dry	0.00	0.00	0.00	0.00	0.00	0.00	0.00	0.00	0.00	0.00	XXX
A6242		P	Hydrogel drg <=16 in w/o bdr	0.00	0.00	0.00	0.00	0.00	0.00	0.00	0.00	0.00	0.00	XXX
A6243		P	Hydrogel drg >16<=48 w/o bdr	0.00	0.00	0.00	0.00	0.00	0.00	0.00	0.00	0.00	0.00	XXX
A6244		P	Hydrogel drg >48 in w/o bdr	0.00	0.00	0.00	0.00	0.00	0.00	0.00	0.00	0.00	0.00	XXX
A6245		P	Hydrogel drg <= 16 in w/bdr	0.00	0.00	0.00	0.00	0.00	0.00	0.00	0.00	0.00	0.00	XXX
A6246		P	Hydrogel drg >16<=48 in w/b	0.00	0.00	0.00	0.00	0.00	0.00	0.00	0.00	0.00	0.00	XXX
A6247		P	Hydrogel drg > 48 sq in w/b	0.00	0.00	0.00	0.00	0.00	0.00	0.00	0.00	0.00	0.00	XXX
A6248		P	Hydrogel drsg gel filler	0.00	0.00	0.00	0.00	0.00	0.00	0.00	0.00	0.00	0.00	XXX
A6250		P	Skin seal protect moisturizr	0.00	0.00	0.00	0.00	0.00	0.00	0.00	0.00	0.00	0.00	XXX
A6251		P	Absorpt drg <=16 sq in w/o b	0.00	0.00	0.00	0.00	0.00	0.00	0.00	0.00	0.00	0.00	XXX
A6252		P	Absorpt drg >16 <=48 w/o bdr	0.00	0.00	0.00	0.00	0.00	0.00	0.00	0.00	0.00	0.00	XXX
A6253		P	Absorpt drg > 48 sq in w/o b	0.00	0.00	0.00	0.00	0.00	0.00	0.00	0.00	0.00	0.00	XXX
A6254		P	Absorpt drg <=16 sq in w/bdr	0.00	0.00	0.00	0.00	0.00	0.00	0.00	0.00	0.00	0.00	XXX
A6255		P	Absorpt drg >16<=48 in w/bdr	0.00	0.00	0.00	0.00	0.00	0.00	0.00	0.00	0.00	0.00	XXX
A6256		P	Absorpt drg > 48 sq in w/bdr	0.00	0.00	0.00	0.00	0.00	0.00	0.00	0.00	0.00	0.00	XXX
A6257		P	Transparent film <= 16 sq in	0.00	0.00	0.00	0.00	0.00	0.00	0.00	0.00	0.00	0.00	XXX
A6258		P	Transparent film >16<=48 in	0.00	0.00	0.00	0.00	0.00	0.00	0.00	0.00	0.00	0.00	XXX
A6259		P	Transparent film > 48 sq in	0.00	0.00	0.00	0.00	0.00	0.00	0.00	0.00	0.00	0.00	XXX
A6260		P	Wound cleanser any type/size	0.00	0.00	0.00	0.00	0.00	0.00	0.00	0.00	0.00	0.00	XXX
A6261		P	Wound filler gel/paste /oz	0.00	0.00	0.00	0.00	0.00	0.00	0.00	0.00	0.00	0.00	XXX
A6262		P	Wound filler dry form / gram	0.00	0.00	0.00	0.00	0.00	0.00	0.00	0.00	0.00	0.00	XXX
A6263		P	Non-sterile elastic gauze/yd	0.00	0.00	0.00	0.00	0.00	0.00	0.00	0.00	0.00	0.00	XXX
A6264		P	Non-sterile no elastic gauze	0.00	0.00	0.00	0.00	0.00	0.00	0.00	0.00	0.00	0.00	XXX
A6265		P	Tape per 18 sq inches	0.00	0.00	0.00	0.00	0.00	0.00	0.00	0.00	0.00	0.00	XXX
A6266		P	Impreg gauze no h20/sal/yard	0.00	0.00	0.00	0.00	0.00	0.00	0.00	0.00	0.00	0.00	XXX
A6402		P	Sterile gauze <= 16 sq in	0.00	0.00	0.00	0.00	0.00	0.00	0.00	0.00	0.00	0.00	XXX
A6403		P	Sterile gauze>16 <= 48 sq in	0.00	0.00	0.00	0.00	0.00	0.00	0.00	0.00	0.00	0.00	XXX
A6404		P	Sterile gauze > 48 sq in	0.00	0.00	0.00	0.00	0.00	0.00	0.00	0.00	0.00	0.00	XXX
A6405		P	Sterile elastic gauze /yd	0.00	0.00	0.00	0.00	0.00	0.00	0.00	0.00	0.00	0.00	XXX
A6406		P	Sterile non-elastic gauze/yd	0.00	0.00	0.00	0.00	0.00	0.00	0.00	0.00	0.00	0.00	XXX
A7000		X	Disposable canister for pump	0.00	0.00	0.00	0.00	0.00	0.00	0.00	0.00	0.00	0.00	XXX
A7001		X	Nondisposable pump canister	0.00	0.00	0.00	0.00	0.00	0.00	0.00	0.00	0.00	0.00	XXX
A7002		X	Tubing used w suction pump	0.00	0.00	0.00	0.00	0.00	0.00	0.00	0.00	0.00	0.00	XXX
A7003		X	Nebulizer administration set	0.00	0.00	0.00	0.00	0.00	0.00	0.00	0.00	0.00	0.00	XXX
A7004		X	Disposable nebulizer sml vol	0.00	0.00	0.00	0.00	0.00	0.00	0.00	0.00	0.00	0.00	XXX
A7005		X	Nondisposable nebulizer set	0.00	0.00	0.00	0.00	0.00	0.00	0.00	0.00	0.00	0.00	XXX
A7006		X	Filtered nebulizer admin set	0.00	0.00	0.00	0.00	0.00	0.00	0.00	0.00	0.00	0.00	XXX
A7007		X	Lg vol nebulizer disposable	0.00	0.00	0.00	0.00	0.00	0.00	0.00	0.00	0.00	0.00	XXX
A7008		X	Disposable nebulizer prefill	0.00	0.00	0.00	0.00	0.00	0.00	0.00	0.00	0.00	0.00	XXX
A7009		X	Nebulizer reservoir bottle	0.00	0.00	0.00	0.00	0.00	0.00	0.00	0.00	0.00	0.00	XXX
A7010		X	Disposable corrugated tubing	0.00	0.00	0.00	0.00	0.00	0.00	0.00	0.00	0.00	0.00	XXX
A7011		X	Nondispos corrugated tubing	0.00	0.00	0.00	0.00	0.00	0.00	0.00	0.00	0.00	0.00	XXX
A7012		X	Nebulizer water collec devic	0.00	0.00	0.00	0.00	0.00	0.00	0.00	0.00	0.00	0.00	XXX
A7013		X	Disposable compressor filter	0.00	0.00	0.00	0.00	0.00	0.00	0.00	0.00	0.00	0.00	XXX
A7014		X	Compressor nondispos filter	0.00	0.00	0.00	0.00	0.00	0.00	0.00	0.00	0.00	0.00	XXX
A7015		X	Aerosol mask used w nebulize	0.00	0.00	0.00	0.00	0.00	0.00	0.00	0.00	0.00	0.00	XXX
A7016		X	Nebulizer dome & mouthpiece	0.00	0.00	0.00	0.00	0.00	0.00	0.00	0.00	0.00	0.00	XXX
A7017		X	Nebulizer not used w oxygen	0.00	0.00	0.00	0.00	0.00	0.00	0.00	0.00	0.00	0.00	XXX
A7018		X	Water distilled w/nebulizer	0.00	0.00	0.00	0.00	0.00	0.00	0.00	0.00	0.00	0.00	XXX
A7019		X	Saline solution dispenser	0.00	0.00	0.00	0.00	0.00	0.00	0.00	0.00	0.00	0.00	XXX
A7020		X	Sterile H2O or NSS w lgv neb	0.00	0.00	0.00	0.00	0.00	0.00	0.00	0.00	0.00	0.00	XXX
A7501		X	Tracheostoma valve w diaphra	0.00	0.00	0.00	0.00	0.00	0.00	0.00	0.00	0.00	0.00	XXX
A7502		X	Replacement diaphragm/fplate	0.00	0.00	0.00	0.00	0.00	0.00	0.00	0.00	0.00	0.00	XXX
A7503		X	HMES filter holder or cap	0.00	0.00	0.00	0.00	0.00	0.00	0.00	0.00	0.00	0.00	XXX
A7504		X	Tracheostoma HMES filter	0.00	0.00	0.00	0.00	0.00	0.00	0.00	0.00	0.00	0.00	XXX
A7505		X	HMES or trach valve housing	0.00	0.00	0.00	0.00	0.00	0.00	0.00	0.00	0.00	0.00	XXX
A7506		X	HMES/trachvalve adhesivedisk	0.00	0.00	0.00	0.00	0.00	0.00	0.00	0.00	0.00	0.00	XXX
A7507		X	Integrated filter & holder	0.00	0.00	0.00	0.00	0.00	0.00	0.00	0.00	0.00	0.00	XXX
A7508		X	Housing & Integrated Adhesiv	0.00	0.00	0.00	0.00	0.00	0.00	0.00	0.00	0.00	0.00	XXX
A7509		X	Heat & moisture exchange sys	0.00	0.00	0.00	0.00	0.00	0.00	0.00	0.00	0.00	0.00	XXX
A9150		E	Misc/exper non-prescript dru	0.00	0.00	0.00	0.00	0.00	0.00	0.00	0.00	0.00	0.00	XXX
A9160		N	Podiatrist non-covered servi	0.00	0.00	0.00	0.00	0.00	0.00	0.00	0.00	0.00	0.00	XXX
A9170		N	Chiropractor non-covered ser	0.00	0.00	0.00	0.00	0.00	0.00	0.00	0.00	0.00	0.00	XXX
A9190		N	Misc/expe personal comfort i	0.00	0.00	0.00	0.00	0.00	0.00	0.00	0.00	0.00	0.00	XXX
A9270		N	Non-covered item or service	0.00	0.00	0.00	0.00	0.00	0.00	0.00	0.00	0.00	0.00	XXX
A9300		N	Exercise equipment	0.00	0.00	0.00	0.00	0.00	0.00	0.00	0.00	0.00	0.00	XXX
A9500		E	Technetium TC 99m sestamibi	0.00	0.00	0.00	0.00	0.00	0.00	0.00	0.00	0.00	0.00	XXX
A9502		X	Technetium TC99M tetrofosmin	0.00	0.00	0.00	0.00	0.00	0.00	0.00	0.00	0.00	0.00	XXX
A9503		E	Technetium TC 99m medronate	0.00	0.00	0.00	0.00	0.00	0.00	0.00	0.00	0.00	0.00	XXX
A9504		X	Technetium tc 99m apcitide	0.00	0.00	0.00	0.00	0.00	0.00	0.00	0.00	0.00	0.00	XXX
A9505		E	Thallous chloride TL 201/mci	0.00	0.00	0.00	0.00	0.00	0.00	0.00	0.00	0.00	0.00	XXX
A9507		X	Indium/111 capromab pendetid	0.00	0.00	0.00	0.00	0.00	0.00	0.00	0.00	0.00	0.00	XXX

[1] CPT codes and descriptions only are copyright 2000 American Medical Association. All Rights Reserved. Applicable FARS/DFARS Apply.
[2] Copyright 1994 American Dental Association. All rights reserved.
[3] + Indicates RVUs are not used for Medicare payment.
[4] PE RVUs = Practice Expense Relative Value Units.

ADDENDUM B.—RELATIVE VALUE UNITS (RVU'S) AND RELATED INFORMATION—Continued

CPT[1]/ HCPCS[2]	MOD	Status	Description	Physician Work RVUs[3]	Fully Implemented Non-Facility PE RVUs	Year 2001 Transitional Non-Facility PE RVUs	Fully Implemented Facility PE RVUs	Year 2001 Transitional Facility PE RVUs	Mal-Practice RVUs	Fully Implemented Non-Facility Total	Year 2001 Transitional Non-Facility Total	Fully Implemented Facility Total	Year 2001 Transitional Facility Total	Global
A9508		X	Iobenguane sulfate I-131	0.00	0.00	0.00	0.00	0.00	0.00	0.00	0.00	0.00	0.00	XXX
A9510		X	Technetium TC99m Disofenin	0.00	0.00	0.00	0.00	0.00	0.00	0.00	0.00	0.00	0.00	XXX
A9600		X	Strontium-89 chloride	0.00	0.00	0.00	0.00	0.00	0.00	0.00	0.00	0.00	0.00	XXX
A9605		X	Samarium sm153 lexidronamm	0.00	0.00	0.00	0.00	0.00	0.00	0.00	0.00	0.00	0.00	XXX
A9700		X	Echocardiography Contrast	0.00	0.00	0.00	0.00	0.00	0.00	0.00	0.00	0.00	0.00	XXX
A9900		X	Supply/accessory/service	0.00	0.00	0.00	0.00	0.00	0.00	0.00	0.00	0.00	0.00	XXX
A9901		X	Delivery/set up/dispensing	0.00	0.00	0.00	0.00	0.00	0.00	0.00	0.00	0.00	0.00	XXX
D0120		N	Periodic oral evaluation	0.00	0.00	0.00	0.00	0.00	0.00	0.00	0.00	0.00	0.00	XXX
D0140		N	Limit oral eval problm focus	0.00	0.00	0.00	0.00	0.00	0.00	0.00	0.00	0.00	0.00	XXX
D0150		R	Comprehensve oral evaluation	0.00	0.00	0.00	0.00	0.00	0.00	0.00	0.00	0.00	0.00	YYY
D0160		N	Extensv oral eval prob focus	0.00	0.00	0.00	0.00	0.00	0.00	0.00	0.00	0.00	0.00	XXX
D0170		N	Re-eval,est pt,problem focus	0.00	0.00	0.00	0.00	0.00	0.00	0.00	0.00	0.00	0.00	XXX
D0210		I	Intraor complete film series	0.00	0.00	0.00	0.00	0.00	0.00	0.00	0.00	0.00	0.00	XXX
D0220		I	Intraoral periapical first f	0.00	0.00	0.00	0.00	0.00	0.00	0.00	0.00	0.00	0.00	XXX
D0230		I	Intraoral periapical ea add	0.00	0.00	0.00	0.00	0.00	0.00	0.00	0.00	0.00	0.00	XXX
D0240		R	Intraoral occlusal film	0.00	0.00	0.00	0.00	0.00	0.00	0.00	0.00	0.00	0.00	YYY
D0250		R	Extraoral first film	0.00	0.00	0.00	0.00	0.00	0.00	0.00	0.00	0.00	0.00	YYY
D0260		R	Extraoral ea additional film	0.00	0.00	0.00	0.00	0.00	0.00	0.00	0.00	0.00	0.00	YYY
D0270		R	Dental bitewing single film	0.00	0.00	0.00	0.00	0.00	0.00	0.00	0.00	0.00	0.00	YYY
D0272		R	Dental bitewings two films	0.00	0.00	0.00	0.00	0.00	0.00	0.00	0.00	0.00	0.00	YYY
D0274		R	Dental bitewings four films	0.00	0.00	0.00	0.00	0.00	0.00	0.00	0.00	0.00	0.00	YYY
D0277		R	Vert bitewings-sev to eight	0.00	0.00	0.00	0.00	0.00	0.00	0.00	0.00	0.00	0.00	XXX
D0290		I	Dental film skull/facial bon	0.00	0.00	0.00	0.00	0.00	0.00	0.00	0.00	0.00	0.00	XXX
D0310		I	Dental saliography	0.00	0.00	0.00	0.00	0.00	0.00	0.00	0.00	0.00	0.00	XXX
D0320		I	Dental tmj arthrogram incl i	0.00	0.00	0.00	0.00	0.00	0.00	0.00	0.00	0.00	0.00	XXX
D0321		I	Dental other tmj films	0.00	0.00	0.00	0.00	0.00	0.00	0.00	0.00	0.00	0.00	XXX
D0322		I	Dental tomographic survey	0.00	0.00	0.00	0.00	0.00	0.00	0.00	0.00	0.00	0.00	XXX
D0330		I	Dental panoramic film	0.00	0.00	0.00	0.00	0.00	0.00	0.00	0.00	0.00	0.00	XXX
D0340		I	Dental cephalometric film	0.00	0.00	0.00	0.00	0.00	0.00	0.00	0.00	0.00	0.00	XXX
D0350		I	Oral/facial images	0.00	0.00	0.00	0.00	0.00	0.00	0.00	0.00	0.00	0.00	XXX
D0415		N	Bacteriologic study	0.00	0.00	0.00	0.00	0.00	0.00	0.00	0.00	0.00	0.00	XXX
D0425		N	Caries susceptibility test	0.00	0.00	0.00	0.00	0.00	0.00	0.00	0.00	0.00	0.00	XXX
D0460		R	Pulp vitality test	0.00	0.00	0.00	0.00	0.00	0.00	0.00	0.00	0.00	0.00	YYY
D0470		N	Diagnostic casts	0.00	0.00	0.00	0.00	0.00	0.00	0.00	0.00	0.00	0.00	XXX
D0472		R	Gross exam, prep & report	0.00	0.00	0.00	0.00	0.00	0.00	0.00	0.00	0.00	0.00	XXX
D0473		R	Micro exam, prep & report	0.00	0.00	0.00	0.00	0.00	0.00	0.00	0.00	0.00	0.00	XXX
D0474		R	Micro w exam of surg margins	0.00	0.00	0.00	0.00	0.00	0.00	0.00	0.00	0.00	0.00	XXX
D0480		R	Cytopath smear prep & report	0.00	0.00	0.00	0.00	0.00	0.00	0.00	0.00	0.00	0.00	XXX
D0501		R	Histopathologic examinations	0.00	0.00	0.00	0.00	0.00	0.00	0.00	0.00	0.00	0.00	YYY
D0502		R	Other oral pathology procedu	0.00	0.00	0.00	0.00	0.00	0.00	0.00	0.00	0.00	0.00	YYY
D0999		R	Unspecified diagnostic proce	0.00	0.00	0.00	0.00	0.00	0.00	0.00	0.00	0.00	0.00	YYY
D1110		N	Dental prophylaxis adult	0.00	0.00	0.00	0.00	0.00	0.00	0.00	0.00	0.00	0.00	XXX
D1120		N	Dental prophylaxis child	0.00	0.00	0.00	0.00	0.00	0.00	0.00	0.00	0.00	0.00	XXX
D1201		N	Topical fluor w prophy child	0.00	0.00	0.00	0.00	0.00	0.00	0.00	0.00	0.00	0.00	XXX
D1203		N	Topical fluor w/o prophy chi	0.00	0.00	0.00	0.00	0.00	0.00	0.00	0.00	0.00	0.00	XXX
D1204		N	Topical fluor w/o prophy adu	0.00	0.00	0.00	0.00	0.00	0.00	0.00	0.00	0.00	0.00	XXX
D1205		N	Topical fluoride w/ prophy a	0.00	0.00	0.00	0.00	0.00	0.00	0.00	0.00	0.00	0.00	XXX
D1310		N	Nutri counsel-control caries	0.00	0.00	0.00	0.00	0.00	0.00	0.00	0.00	0.00	0.00	XXX
D1320		N	Tobacco counseling	0.00	0.00	0.00	0.00	0.00	0.00	0.00	0.00	0.00	0.00	XXX
D1330		N	Oral hygiene instruction	0.00	0.00	0.00	0.00	0.00	0.00	0.00	0.00	0.00	0.00	XXX
D1351		N	Dental sealant per tooth	0.00	0.00	0.00	0.00	0.00	0.00	0.00	0.00	0.00	0.00	XXX
D1510		R	Space maintainer fxd unilat	0.00	0.00	0.00	0.00	0.00	0.00	0.00	0.00	0.00	0.00	YYY
D1515		R	Fixed bilat space maintainer	0.00	0.00	0.00	0.00	0.00	0.00	0.00	0.00	0.00	0.00	YYY
D1520		R	Remove unilat space maintain	0.00	0.00	0.00	0.00	0.00	0.00	0.00	0.00	0.00	0.00	YYY
D1525		R	Remove bilat space maintain	0.00	0.00	0.00	0.00	0.00	0.00	0.00	0.00	0.00	0.00	YYY
D1550		R	Recement space maintainer	0.00	0.00	0.00	0.00	0.00	0.00	0.00	0.00	0.00	0.00	YYY
D2110		N	Amalgam one surface primary	0.00	0.00	0.00	0.00	0.00	0.00	0.00	0.00	0.00	0.00	XXX
D2120		N	Amalgam two surfaces primary	0.00	0.00	0.00	0.00	0.00	0.00	0.00	0.00	0.00	0.00	XXX
D2130		N	Amalgam three surfaces prima	0.00	0.00	0.00	0.00	0.00	0.00	0.00	0.00	0.00	0.00	XXX
D2131		N	Amalgam four/more surf prima	0.00	0.00	0.00	0.00	0.00	0.00	0.00	0.00	0.00	0.00	XXX
D2140		N	Amalgam one surface permanen	0.00	0.00	0.00	0.00	0.00	0.00	0.00	0.00	0.00	0.00	XXX
D2150		N	Amalgam two surfaces permane	0.00	0.00	0.00	0.00	0.00	0.00	0.00	0.00	0.00	0.00	XXX
D2160		N	Amalgam three surfaces perma	0.00	0.00	0.00	0.00	0.00	0.00	0.00	0.00	0.00	0.00	XXX
D2161		N	Amalgam 4 or > surfaces perm	0.00	0.00	0.00	0.00	0.00	0.00	0.00	0.00	0.00	0.00	XXX
D2330		N	Resin one surface-anterior	0.00	0.00	0.00	0.00	0.00	0.00	0.00	0.00	0.00	0.00	XXX
D2331		N	Resin two surfaces-anterior	0.00	0.00	0.00	0.00	0.00	0.00	0.00	0.00	0.00	0.00	XXX
D2332		N	Resin three surfaces-anterio	0.00	0.00	0.00	0.00	0.00	0.00	0.00	0.00	0.00	0.00	XXX
D2335		N	Resin 4/> surf or w incis an	0.00	0.00	0.00	0.00	0.00	0.00	0.00	0.00	0.00	0.00	XXX
D2336		N	Composite resin crown	0.00	0.00	0.00	0.00	0.00	0.00	0.00	0.00	0.00	0.00	XXX
D2337		N	Compo resin crown ant-perm	0.00	0.00	0.00	0.00	0.00	0.00	0.00	0.00	0.00	0.00	XXX
D2380		N	Resin one surf poster primar	0.00	0.00	0.00	0.00	0.00	0.00	0.00	0.00	0.00	0.00	XXX
D2381		N	Resin two surf poster primar	0.00	0.00	0.00	0.00	0.00	0.00	0.00	0.00	0.00	0.00	XXX
D2382		N	Resin three/more surf post p	0.00	0.00	0.00	0.00	0.00	0.00	0.00	0.00	0.00	0.00	XXX
D2385		N	Resin one surf poster perman	0.00	0.00	0.00	0.00	0.00	0.00	0.00	0.00	0.00	0.00	XXX
D2386		N	Resin two surf poster perman	0.00	0.00	0.00	0.00	0.00	0.00	0.00	0.00	0.00	0.00	XXX
D2387		N	Resin three/more surf post p	0.00	0.00	0.00	0.00	0.00	0.00	0.00	0.00	0.00	0.00	XXX
D2388		N	Resin four/more, post perm	0.00	0.00	0.00	0.00	0.00	0.00	0.00	0.00	0.00	0.00	XXX
D2410		N	Dental gold foil one surface	0.00	0.00	0.00	0.00	0.00	0.00	0.00	0.00	0.00	0.00	XXX
D2420		N	Dental gold foil two surface	0.00	0.00	0.00	0.00	0.00	0.00	0.00	0.00	0.00	0.00	XXX
D2430		N	Dental gold foil three surfa	0.00	0.00	0.00	0.00	0.00	0.00	0.00	0.00	0.00	0.00	XXX
D2510		N	Dental inlay metalic 1 surf	0.00	0.00	0.00	0.00	0.00	0.00	0.00	0.00	0.00	0.00	XXX
D2520		N	Dental inlay metallic 2 surf	0.00	0.00	0.00	0.00	0.00	0.00	0.00	0.00	0.00	0.00	XXX
D2530		N	Dental inlay metl 3/more sur	0.00	0.00	0.00	0.00	0.00	0.00	0.00	0.00	0.00	0.00	XXX

[1] CPT codes and descriptions only are copyright 2000 American Medical Association. All Rights Reserved. Applicable FARS/DFARS Apply.
[2] Copyright 1994 American Dental Association. All rights reserved.
[3] + Indicates RVUs are not used for Medicare payment.
[4] PE RVUs = Practice Expense Relative Value Units.

ADDENDUM B.—RELATIVE VALUE UNITS (RVU'S) AND RELATED INFORMATION—Continued

CPT[1]/ HCPCS[2]	MOD	Status	Description	Physician Work RVUs[3]	Fully Implemented Non-Facility PE RVUs	Year 2001 Transitional Non-Facility PE RVUs	Fully Implemented Facility PE RVUs	Year 2001 Transitional Facility PE RVUs	Mal-Practice RVUs	Fully Implemented Non-Facility Total	Year 2001 Transitional Non-Facility Total	Fully Implemented Facility Total	Year 2001 Transitional Facility Total	Global
D2542		N	Dental onlay metallic 2 surf	0.00	0.00	0.00	0.00	0.00	0.00	0.00	0.00	0.00	0.00	XXX
D2543		N	Dental onlay metallic 3 surf	0.00	0.00	0.00	0.00	0.00	0.00	0.00	0.00	0.00	0.00	XXX
D2544		N	Dental onlay metl 4/more sur	0.00	0.00	0.00	0.00	0.00	0.00	0.00	0.00	0.00	0.00	XXX
D2610		N	Inlay porcelain/ceramic 1 su	0.00	0.00	0.00	0.00	0.00	0.00	0.00	0.00	0.00	0.00	XXX
D2620		N	Inlay porcelain/ceramic 2 su	0.00	0.00	0.00	0.00	0.00	0.00	0.00	0.00	0.00	0.00	XXX
D2630		N	Dental onlay porc 3/more sur	0.00	0.00	0.00	0.00	0.00	0.00	0.00	0.00	0.00	0.00	XXX
D2642		N	Dental onlay porcelin 2 surf	0.00	0.00	0.00	0.00	0.00	0.00	0.00	0.00	0.00	0.00	XXX
D2643		N	Dental onlay porcelin 3 surf	0.00	0.00	0.00	0.00	0.00	0.00	0.00	0.00	0.00	0.00	XXX
D2644		N	Dental onlay porc 4/more sur	0.00	0.00	0.00	0.00	0.00	0.00	0.00	0.00	0.00	0.00	XXX
D2650		N	Inlay composite/resin one su	0.00	0.00	0.00	0.00	0.00	0.00	0.00	0.00	0.00	0.00	XXX
D2651		N	Inlay composite/resin two su	0.00	0.00	0.00	0.00	0.00	0.00	0.00	0.00	0.00	0.00	XXX
D2652		N	Dental inlay resin 3/mre sur	0.00	0.00	0.00	0.00	0.00	0.00	0.00	0.00	0.00	0.00	XXX
D2662		N	Dental onlay resin 2 surface	0.00	0.00	0.00	0.00	0.00	0.00	0.00	0.00	0.00	0.00	XXX
D2663		N	Dental onlay resin 3 surface	0.00	0.00	0.00	0.00	0.00	0.00	0.00	0.00	0.00	0.00	XXX
D2664		N	Dental onlay resin 4/mre sur	0.00	0.00	0.00	0.00	0.00	0.00	0.00	0.00	0.00	0.00	XXX
D2710		N	Crown resin laboratory	0.00	0.00	0.00	0.00	0.00	0.00	0.00	0.00	0.00	0.00	XXX
D2720		N	Crown resin w/ high noble me	0.00	0.00	0.00	0.00	0.00	0.00	0.00	0.00	0.00	0.00	XXX
D2721		N	Crown resin w/ base metal	0.00	0.00	0.00	0.00	0.00	0.00	0.00	0.00	0.00	0.00	XXX
D2722		N	Crown resin w/ noble metal	0.00	0.00	0.00	0.00	0.00	0.00	0.00	0.00	0.00	0.00	XXX
D2740		N	Crown porcelain/ceramic subs	0.00	0.00	0.00	0.00	0.00	0.00	0.00	0.00	0.00	0.00	XXX
D2750		N	Crown porcelain w/ h noble m	0.00	0.00	0.00	0.00	0.00	0.00	0.00	0.00	0.00	0.00	XXX
D2751		N	Crown porcelain fused base m	0.00	0.00	0.00	0.00	0.00	0.00	0.00	0.00	0.00	0.00	XXX
D2752		N	Crown porcelain w/ noble met	0.00	0.00	0.00	0.00	0.00	0.00	0.00	0.00	0.00	0.00	XXX
D2780		N	Crown 3/4 cast hi noble met	0.00	0.00	0.00	0.00	0.00	0.00	0.00	0.00	0.00	0.00	XXX
D2781		N	Crown 3/4 cast base metal	0.00	0.00	0.00	0.00	0.00	0.00	0.00	0.00	0.00	0.00	XXX
D2782		N	Crown 3/4 cast noble metal	0.00	0.00	0.00	0.00	0.00	0.00	0.00	0.00	0.00	0.00	XXX
D2783		N	Crown 3/4 porcelain/ceramic	0.00	0.00	0.00	0.00	0.00	0.00	0.00	0.00	0.00	0.00	XXX
D2790		N	Crown full cast high noble m	0.00	0.00	0.00	0.00	0.00	0.00	0.00	0.00	0.00	0.00	XXX
D2791		N	Crown full cast base metal	0.00	0.00	0.00	0.00	0.00	0.00	0.00	0.00	0.00	0.00	XXX
D2792		N	Crown full cast noble metal	0.00	0.00	0.00	0.00	0.00	0.00	0.00	0.00	0.00	0.00	XXX
D2799		N	Provisional crown	0.00	0.00	0.00	0.00	0.00	0.00	0.00	0.00	0.00	0.00	XXX
D2910		N	Dental recement inlay	0.00	0.00	0.00	0.00	0.00	0.00	0.00	0.00	0.00	0.00	XXX
D2920		N	Dental recement crown	0.00	0.00	0.00	0.00	0.00	0.00	0.00	0.00	0.00	0.00	XXX
D2930		N	Prefab stnlss steel crwn pri	0.00	0.00	0.00	0.00	0.00	0.00	0.00	0.00	0.00	0.00	XXX
D2931		N	Prefab stnlss steel crown pe	0.00	0.00	0.00	0.00	0.00	0.00	0.00	0.00	0.00	0.00	XXX
D2932		N	Prefabricated resin crown	0.00	0.00	0.00	0.00	0.00	0.00	0.00	0.00	0.00	0.00	XXX
D2933		N	Prefab stainless steel crown	0.00	0.00	0.00	0.00	0.00	0.00	0.00	0.00	0.00	0.00	XXX
D2940		N	Dental sedative filling	0.00	0.00	0.00	0.00	0.00	0.00	0.00	0.00	0.00	0.00	XXX
D2950		N	Core build-up incl any pins	0.00	0.00	0.00	0.00	0.00	0.00	0.00	0.00	0.00	0.00	XXX
D2951		N	Tooth pin retention	0.00	0.00	0.00	0.00	0.00	0.00	0.00	0.00	0.00	0.00	XXX
D2952		N	Post and core cast + crown	0.00	0.00	0.00	0.00	0.00	0.00	0.00	0.00	0.00	0.00	XXX
D2953		N	Each addtnl cast post	0.00	0.00	0.00	0.00	0.00	0.00	0.00	0.00	0.00	0.00	XXX
D2954		N	Prefab post/core + crown	0.00	0.00	0.00	0.00	0.00	0.00	0.00	0.00	0.00	0.00	XXX
D2955		N	Post removal	0.00	0.00	0.00	0.00	0.00	0.00	0.00	0.00	0.00	0.00	XXX
D2957		N	Each addtnl prefab post	0.00	0.00	0.00	0.00	0.00	0.00	0.00	0.00	0.00	0.00	XXX
D2960		N	Laminate labial veneer	0.00	0.00	0.00	0.00	0.00	0.00	0.00	0.00	0.00	0.00	XXX
D2961		N	Lab labial veneer resin	0.00	0.00	0.00	0.00	0.00	0.00	0.00	0.00	0.00	0.00	XXX
D2962		N	Lab labial veneer porcelain	0.00	0.00	0.00	0.00	0.00	0.00	0.00	0.00	0.00	0.00	XXX
D2970		R	Temporary- fractured tooth	0.00	0.00	0.00	0.00	0.00	0.00	0.00	0.00	0.00	0.00	YYY
D2980		N	Crown repair	0.00	0.00	0.00	0.00	0.00	0.00	0.00	0.00	0.00	0.00	XXX
D2999		R	Dental unspec restorative pr	0.00	0.00	0.00	0.00	0.00	0.00	0.00	0.00	0.00	0.00	YYY
D3110		N	Pulp cap direct	0.00	0.00	0.00	0.00	0.00	0.00	0.00	0.00	0.00	0.00	XXX
D3120		N	Pulp cap indirect	0.00	0.00	0.00	0.00	0.00	0.00	0.00	0.00	0.00	0.00	XXX
D3220		N	Therapeutic pulpotomy	0.00	0.00	0.00	0.00	0.00	0.00	0.00	0.00	0.00	0.00	XXX
D3221		N	Gross pulpal debridement	0.00	0.00	0.00	0.00	0.00	0.00	0.00	0.00	0.00	0.00	XXX
D3230		N	Pulpal therapy anterior prim	0.00	0.00	0.00	0.00	0.00	0.00	0.00	0.00	0.00	0.00	XXX
D3240		N	Pulpal therapy posterior pri	0.00	0.00	0.00	0.00	0.00	0.00	0.00	0.00	0.00	0.00	XXX
D3310		N	Anterior	0.00	0.00	0.00	0.00	0.00	0.00	0.00	0.00	0.00	0.00	XXX
D3320		N	Root canal therapy 2 canals	0.00	0.00	0.00	0.00	0.00	0.00	0.00	0.00	0.00	0.00	XXX
D3330		N	Root canal therapy 3 canals	0.00	0.00	0.00	0.00	0.00	0.00	0.00	0.00	0.00	0.00	XXX
D3331		N	Non-surg tx root canal obs	0.00	0.00	0.00	0.00	0.00	0.00	0.00	0.00	0.00	0.00	XXX
D3332		N	Incomplete endodontic tx	0.00	0.00	0.00	0.00	0.00	0.00	0.00	0.00	0.00	0.00	XXX
D3333		N	Internal root repair	0.00	0.00	0.00	0.00	0.00	0.00	0.00	0.00	0.00	0.00	XXX
D3346		N	Retreat root canal anterior	0.00	0.00	0.00	0.00	0.00	0.00	0.00	0.00	0.00	0.00	XXX
D3347		N	Retreat root canal bicuspid	0.00	0.00	0.00	0.00	0.00	0.00	0.00	0.00	0.00	0.00	XXX
D3348		N	Retreat root canal molar	0.00	0.00	0.00	0.00	0.00	0.00	0.00	0.00	0.00	0.00	XXX
D3351		N	Apexification/recalc initial	0.00	0.00	0.00	0.00	0.00	0.00	0.00	0.00	0.00	0.00	XXX
D3352		N	Apexification/recalc interim	0.00	0.00	0.00	0.00	0.00	0.00	0.00	0.00	0.00	0.00	XXX
D3353		N	Apexification/recalc final	0.00	0.00	0.00	0.00	0.00	0.00	0.00	0.00	0.00	0.00	XXX
D3410		N	Apicoect/perirad surg anter	0.00	0.00	0.00	0.00	0.00	0.00	0.00	0.00	0.00	0.00	XXX
D3421		N	Root surgery bicuspid	0.00	0.00	0.00	0.00	0.00	0.00	0.00	0.00	0.00	0.00	XXX
D3425		N	Root surgery molar	0.00	0.00	0.00	0.00	0.00	0.00	0.00	0.00	0.00	0.00	XXX
D3426		N	Root surgery ea add root	0.00	0.00	0.00	0.00	0.00	0.00	0.00	0.00	0.00	0.00	XXX
D3430		N	Retrograde filling	0.00	0.00	0.00	0.00	0.00	0.00	0.00	0.00	0.00	0.00	XXX
D3450		N	Root amputation	0.00	0.00	0.00	0.00	0.00	0.00	0.00	0.00	0.00	0.00	XXX
D3460		R	Endodontic endosseous implan	0.00	0.00	0.00	0.00	0.00	0.00	0.00	0.00	0.00	0.00	YYY
D3470		N	Intentional replantation	0.00	0.00	0.00	0.00	0.00	0.00	0.00	0.00	0.00	0.00	XXX
D3910		N	Isolation- tooth w rubb dam	0.00	0.00	0.00	0.00	0.00	0.00	0.00	0.00	0.00	0.00	XXX
D3920		N	Tooth splitting	0.00	0.00	0.00	0.00	0.00	0.00	0.00	0.00	0.00	0.00	XXX
D3950		N	Canal prep/fitting of dowel	0.00	0.00	0.00	0.00	0.00	0.00	0.00	0.00	0.00	0.00	XXX
D3999		R	Endodontic procedure	0.00	0.00	0.00	0.00	0.00	0.00	0.00	0.00	0.00	0.00	YYY
D4210		I	Gingivectomy/plasty per quad	0.00	0.00	0.00	0.00	0.00	0.00	0.00	0.00	0.00	0.00	XXX
D4211		I	Gingivectomy/plasty per toot	0.00	0.00	0.00	0.00	0.00	0.00	0.00	0.00	0.00	0.00	XXX

[1] CPT codes and descriptions only are copyright 2000 American Medical Association. All Rights Reserved. Applicable FARS/DFARS Apply.
[2] Copyright 1994 American Dental Association. All rights reserved.
[3] + Indicates RVUs are not used for Medicare payment.
[4] PE RVUs = Practice Expense Relative Value Units.

ADDENDUM B.—RELATIVE VALUE UNITS (RVU'S) AND RELATED INFORMATION—Continued

CPT[1]/ HCPCS[2]	MOD	Status	Description	Physician Work RVUs[3]	Fully Implemented Non-Facility PE RVUs	Year 2001 Transitional Non-Facility PE RVUs	Fully Implemented Facility PE RVUs	Year 2001 Transitional Facility PE RVUs	Mal-Practice RVUs	Fully Implemented Non-Facility Total	Year 2001 Transitional Non-Facility Total	Fully Implemented Facility Total	Year 2001 Transitional Facility Total	Global
D4220		N	Gingival curettage per quadr	0.00	0.00	0.00	0.00	0.00	0.00	0.00	0.00	0.00	0.00	XXX
D4240		N	Gingival flap proc w/ planin	0.00	0.00	0.00	0.00	0.00	0.00	0.00	0.00	0.00	0.00	XXX
D4245		N	Apically positioned flap	0.00	0.00	0.00	0.00	0.00	0.00	0.00	0.00	0.00	0.00	XXX
D4249		N	Crown lengthen hard tissue	0.00	0.00	0.00	0.00	0.00	0.00	0.00	0.00	0.00	0.00	XXX
D4260		R	Osseous surgery per quadrant	0.00	0.00	0.00	0.00	0.00	0.00	0.00	0.00	0.00	0.00	YYY
D4263		R	Bone replce graft first site	0.00	0.00	0.00	0.00	0.00	0.00	0.00	0.00	0.00	0.00	YYY
D4264		R	Bone replce graft each add	0.00	0.00	0.00	0.00	0.00	0.00	0.00	0.00	0.00	0.00	YYY
D4266		N	Guided tiss regen resorble	0.00	0.00	0.00	0.00	0.00	0.00	0.00	0.00	0.00	0.00	XXX
D4267		N	Guided tiss regen nonresorb	0.00	0.00	0.00	0.00	0.00	0.00	0.00	0.00	0.00	0.00	XXX
D4268		R	Surgical revision procedure	0.00	0.00	0.00	0.00	0.00	0.00	0.00	0.00	0.00	0.00	XXX
D4270		R	Pedicle soft tissue graft pr	0.00	0.00	0.00	0.00	0.00	0.00	0.00	0.00	0.00	0.00	YYY
D4271		R	Free soft tissue graft proc	0.00	0.00	0.00	0.00	0.00	0.00	0.00	0.00	0.00	0.00	YYY
D4273		R	Subepithelial tissue graft	0.00	0.00	0.00	0.00	0.00	0.00	0.00	0.00	0.00	0.00	YYY
D4274		N	Distal/proximal wedge proc	0.00	0.00	0.00	0.00	0.00	0.00	0.00	0.00	0.00	0.00	XXX
D4320		N	Provision splnt intracoronal	0.00	0.00	0.00	0.00	0.00	0.00	0.00	0.00	0.00	0.00	XXX
D4321		N	Provisional splint extracoro	0.00	0.00	0.00	0.00	0.00	0.00	0.00	0.00	0.00	0.00	XXX
D4341		N	Periodontal scaling & root	0.00	0.00	0.00	0.00	0.00	0.00	0.00	0.00	0.00	0.00	XXX
D4355		R	Full mouth debridement	0.00	0.00	0.00	0.00	0.00	0.00	0.00	0.00	0.00	0.00	YYY
D4381		R	Localized chemo delivery	0.00	0.00	0.00	0.00	0.00	0.00	0.00	0.00	0.00	0.00	YYY
D4910		N	Periodontal maint procedures	0.00	0.00	0.00	0.00	0.00	0.00	0.00	0.00	0.00	0.00	XXX
D4920		N	Unscheduled dressing change	0.00	0.00	0.00	0.00	0.00	0.00	0.00	0.00	0.00	0.00	XXX
D4999		N	Unspecified periodontal proc	0.00	0.00	0.00	0.00	0.00	0.00	0.00	0.00	0.00	0.00	XXX
D5110		N	Dentures complete maxillary	0.00	0.00	0.00	0.00	0.00	0.00	0.00	0.00	0.00	0.00	XXX
D5120		N	Dentures complete mandible	0.00	0.00	0.00	0.00	0.00	0.00	0.00	0.00	0.00	0.00	XXX
D5130		N	Dentures immediat maxillary	0.00	0.00	0.00	0.00	0.00	0.00	0.00	0.00	0.00	0.00	XXX
D5140		N	Dentures immediat mandible	0.00	0.00	0.00	0.00	0.00	0.00	0.00	0.00	0.00	0.00	XXX
D5211		N	Dentures maxill part resin	0.00	0.00	0.00	0.00	0.00	0.00	0.00	0.00	0.00	0.00	XXX
D5212		N	Dentures mand part resin	0.00	0.00	0.00	0.00	0.00	0.00	0.00	0.00	0.00	0.00	XXX
D5213		N	Dentures maxill part metal	0.00	0.00	0.00	0.00	0.00	0.00	0.00	0.00	0.00	0.00	XXX
D5214		N	Dentures mandibl part metal	0.00	0.00	0.00	0.00	0.00	0.00	0.00	0.00	0.00	0.00	XXX
D5281		N	Removable partial denture	0.00	0.00	0.00	0.00	0.00	0.00	0.00	0.00	0.00	0.00	XXX
D5410		N	Dentures adjust cmplt maxil	0.00	0.00	0.00	0.00	0.00	0.00	0.00	0.00	0.00	0.00	XXX
D5411		N	Dentures adjust cmplt mand	0.00	0.00	0.00	0.00	0.00	0.00	0.00	0.00	0.00	0.00	XXX
D5421		N	Dentures adjust part maxill	0.00	0.00	0.00	0.00	0.00	0.00	0.00	0.00	0.00	0.00	XXX
D5422		N	Dentures adjust part mandbl	0.00	0.00	0.00	0.00	0.00	0.00	0.00	0.00	0.00	0.00	XXX
D5510		N	Dentur repr broken compl bas	0.00	0.00	0.00	0.00	0.00	0.00	0.00	0.00	0.00	0.00	XXX
D5520		N	Replace denture teeth complt	0.00	0.00	0.00	0.00	0.00	0.00	0.00	0.00	0.00	0.00	XXX
D5610		N	Dentures repair resin base	0.00	0.00	0.00	0.00	0.00	0.00	0.00	0.00	0.00	0.00	XXX
D5620		N	Rep part denture cast frame	0.00	0.00	0.00	0.00	0.00	0.00	0.00	0.00	0.00	0.00	XXX
D5630		N	Rep partial denture clasp	0.00	0.00	0.00	0.00	0.00	0.00	0.00	0.00	0.00	0.00	XXX
D5640		N	Replace part denture teeth	0.00	0.00	0.00	0.00	0.00	0.00	0.00	0.00	0.00	0.00	XXX
D5650		N	Add tooth to partial denture	0.00	0.00	0.00	0.00	0.00	0.00	0.00	0.00	0.00	0.00	XXX
D5660		N	Add clasp to partial denture	0.00	0.00	0.00	0.00	0.00	0.00	0.00	0.00	0.00	0.00	XXX
D5710		N	Dentures rebase cmplt maxil	0.00	0.00	0.00	0.00	0.00	0.00	0.00	0.00	0.00	0.00	XXX
D5711		N	Dentures rebase cmplt mand	0.00	0.00	0.00	0.00	0.00	0.00	0.00	0.00	0.00	0.00	XXX
D5720		N	Dentures rebase part maxill	0.00	0.00	0.00	0.00	0.00	0.00	0.00	0.00	0.00	0.00	XXX
D5721		N	Dentures rebase part mandbl	0.00	0.00	0.00	0.00	0.00	0.00	0.00	0.00	0.00	0.00	XXX
D5730		N	Denture reln cmplt maxil ch	0.00	0.00	0.00	0.00	0.00	0.00	0.00	0.00	0.00	0.00	XXX
D5731		N	Denture reln cmplt mand chr	0.00	0.00	0.00	0.00	0.00	0.00	0.00	0.00	0.00	0.00	XXX
D5740		N	Denture reln part maxil chr	0.00	0.00	0.00	0.00	0.00	0.00	0.00	0.00	0.00	0.00	XXX
D5741		N	Denture reln part mand chr	0.00	0.00	0.00	0.00	0.00	0.00	0.00	0.00	0.00	0.00	XXX
D5750		N	Denture reln cmplt max lab	0.00	0.00	0.00	0.00	0.00	0.00	0.00	0.00	0.00	0.00	XXX
D5751		N	Denture reln cmplt mand lab	0.00	0.00	0.00	0.00	0.00	0.00	0.00	0.00	0.00	0.00	XXX
D5760		N	Denture reln part maxil lab	0.00	0.00	0.00	0.00	0.00	0.00	0.00	0.00	0.00	0.00	XXX
D5761		N	Denture reln part mand lab	0.00	0.00	0.00	0.00	0.00	0.00	0.00	0.00	0.00	0.00	XXX
D5810		N	Denture interm cmplt maxill	0.00	0.00	0.00	0.00	0.00	0.00	0.00	0.00	0.00	0.00	XXX
D5811		N	Denture interm cmplt mandbl	0.00	0.00	0.00	0.00	0.00	0.00	0.00	0.00	0.00	0.00	XXX
D5820		N	Denture interm part maxill	0.00	0.00	0.00	0.00	0.00	0.00	0.00	0.00	0.00	0.00	XXX
D5821		N	Denture interm part mandbl	0.00	0.00	0.00	0.00	0.00	0.00	0.00	0.00	0.00	0.00	XXX
D5850		N	Denture tiss conditn maxill	0.00	0.00	0.00	0.00	0.00	0.00	0.00	0.00	0.00	0.00	XXX
D5851		N	Denture tiss condtin mandbl	0.00	0.00	0.00	0.00	0.00	0.00	0.00	0.00	0.00	0.00	XXX
D5860		N	Overdenture complete	0.00	0.00	0.00	0.00	0.00	0.00	0.00	0.00	0.00	0.00	XXX
D5861		N	Overdenture partial	0.00	0.00	0.00	0.00	0.00	0.00	0.00	0.00	0.00	0.00	XXX
D5862		N	Precision attachment	0.00	0.00	0.00	0.00	0.00	0.00	0.00	0.00	0.00	0.00	XXX
D5867		N	Replacement of precision att	0.00	0.00	0.00	0.00	0.00	0.00	0.00	0.00	0.00	0.00	XXX
D5875		N	Prosthesis modification	0.00	0.00	0.00	0.00	0.00	0.00	0.00	0.00	0.00	0.00	XXX
D5899		N	Removable prosthodontic proc	0.00	0.00	0.00	0.00	0.00	0.00	0.00	0.00	0.00	0.00	XXX
D5911		R	Facial moulage sectional	0.00	0.00	0.00	0.00	0.00	0.00	0.00	0.00	0.00	0.00	YYY
D5912		R	Facial moulage complete	0.00	0.00	0.00	0.00	0.00	0.00	0.00	0.00	0.00	0.00	YYY
D5913		I	Nasal prosthesis	0.00	0.00	0.00	0.00	0.00	0.00	0.00	0.00	0.00	0.00	XXX
D5914		I	Auricular prosthesis	0.00	0.00	0.00	0.00	0.00	0.00	0.00	0.00	0.00	0.00	XXX
D5915		I	Orbital prosthesis	0.00	0.00	0.00	0.00	0.00	0.00	0.00	0.00	0.00	0.00	XXX
D5916		I	Ocular prosthesis	0.00	0.00	0.00	0.00	0.00	0.00	0.00	0.00	0.00	0.00	XXX
D5919		I	Facial prosthesis	0.00	0.00	0.00	0.00	0.00	0.00	0.00	0.00	0.00	0.00	XXX
D5922		I	Nasal septal prosthesis	0.00	0.00	0.00	0.00	0.00	0.00	0.00	0.00	0.00	0.00	XXX
D5923		I	Ocular prosthesis interim	0.00	0.00	0.00	0.00	0.00	0.00	0.00	0.00	0.00	0.00	XXX
D5924		I	Cranial prosthesis	0.00	0.00	0.00	0.00	0.00	0.00	0.00	0.00	0.00	0.00	XXX
D5925		I	Facial augmentation implant	0.00	0.00	0.00	0.00	0.00	0.00	0.00	0.00	0.00	0.00	XXX
D5926		I	Replacement nasal prosthesis	0.00	0.00	0.00	0.00	0.00	0.00	0.00	0.00	0.00	0.00	XXX
D5927		I	Auricular replacement	0.00	0.00	0.00	0.00	0.00	0.00	0.00	0.00	0.00	0.00	XXX
D5928		I	Orbital replacement	0.00	0.00	0.00	0.00	0.00	0.00	0.00	0.00	0.00	0.00	XXX
D5929		I	Facial replacement	0.00	0.00	0.00	0.00	0.00	0.00	0.00	0.00	0.00	0.00	XXX
D5931		I	Surgical obturator	0.00	0.00	0.00	0.00	0.00	0.00	0.00	0.00	0.00	0.00	XXX

[1] CPT codes and descriptions only are copyright 2000 American Medical Association. All Rights Reserved. Applicable FARS/DFARS Apply.
[2] Copyright 1994 American Dental Association. All rights reserved.
[3] + Indicates RVUs are not used for Medicare payment.
[4] PE RVUs = Practice Expense Relative Value Units.

ADDENDUM B.—RELATIVE VALUE UNITS (RVU'S) AND RELATED INFORMATION—Continued

CPT[1]/ HCPCS[2]	MOD	Status	Description	Physician Work RVUs[3]	Fully Implemented Non-Facility PE RVUs	Year 2001 Transitional Non-Facility PE RVUs	Fully Implemented Facility PE RVUs	Year 2001 Transitional Facility PE RVUs	Mal-Practice RVUs	Fully Implemented Non-Facility Total	Year 2001 Transitional Non-Facility Total	Fully Implemented Facility Total	Year 2001 Transitional Facility Total	Global
D5932		I	Postsurgical obturator	0.00	0.00	0.00	0.00	0.00	0.00	0.00	0.00	0.00	0.00	XXX
D5933		I	Refitting of obturator	0.00	0.00	0.00	0.00	0.00	0.00	0.00	0.00	0.00	0.00	XXX
D5934		I	Mandibular flange prosthesis	0.00	0.00	0.00	0.00	0.00	0.00	0.00	0.00	0.00	0.00	XXX
D5935		I	Mandibular denture prosth	0.00	0.00	0.00	0.00	0.00	0.00	0.00	0.00	0.00	0.00	XXX
D5936		I	Temp obturator prosthesis	0.00	0.00	0.00	0.00	0.00	0.00	0.00	0.00	0.00	0.00	XXX
D5937		I	Trismus appliance	0.00	0.00	0.00	0.00	0.00	0.00	0.00	0.00	0.00	0.00	XXX
D5951		R	Feeding aid	0.00	0.00	0.00	0.00	0.00	0.00	0.00	0.00	0.00	0.00	YYY
D5952		I	Pediatric speech aid	0.00	0.00	0.00	0.00	0.00	0.00	0.00	0.00	0.00	0.00	XXX
D5953		I	Adult speech aid	0.00	0.00	0.00	0.00	0.00	0.00	0.00	0.00	0.00	0.00	XXX
D5954		I	Superimposed prosthesis	0.00	0.00	0.00	0.00	0.00	0.00	0.00	0.00	0.00	0.00	XXX
D5955		I	Palatal lift prosthesis	0.00	0.00	0.00	0.00	0.00	0.00	0.00	0.00	0.00	0.00	XXX
D5958		I	Intraoral con def inter plt	0.00	0.00	0.00	0.00	0.00	0.00	0.00	0.00	0.00	0.00	XXX
D5959		I	Intraoral con def mod palat	0.00	0.00	0.00	0.00	0.00	0.00	0.00	0.00	0.00	0.00	XXX
D5960		I	Modify speech aid prosthesis	0.00	0.00	0.00	0.00	0.00	0.00	0.00	0.00	0.00	0.00	XXX
D5982		I	Surgical stent	0.00	0.00	0.00	0.00	0.00	0.00	0.00	0.00	0.00	0.00	XXX
D5983		R	Radiation applicator	0.00	0.00	0.00	0.00	0.00	0.00	0.00	0.00	0.00	0.00	YYY
D5984		R	Radiation shield	0.00	0.00	0.00	0.00	0.00	0.00	0.00	0.00	0.00	0.00	YYY
D5985		R	Radiation cone locator	0.00	0.00	0.00	0.00	0.00	0.00	0.00	0.00	0.00	0.00	YYY
D5986		N	Fluoride applicator	0.00	0.00	0.00	0.00	0.00	0.00	0.00	0.00	0.00	0.00	XXX
D5987		R	Commissure splint	0.00	0.00	0.00	0.00	0.00	0.00	0.00	0.00	0.00	0.00	YYY
D5988		I	Surgical splint	0.00	0.00	0.00	0.00	0.00	0.00	0.00	0.00	0.00	0.00	XXX
D5999		I	Maxillofacial prosthesis	0.00	0.00	0.00	0.00	0.00	0.00	0.00	0.00	0.00	0.00	XXX
D6010		I	Odontics endosteal implant	0.00	0.00	0.00	0.00	0.00	0.00	0.00	0.00	0.00	0.00	XXX
D6020		I	Odontics abutment placement	0.00	0.00	0.00	0.00	0.00	0.00	0.00	0.00	0.00	0.00	XXX
D6040		I	Odontics eposteal implant	0.00	0.00	0.00	0.00	0.00	0.00	0.00	0.00	0.00	0.00	XXX
D6050		I	Odontics transosteal implnt	0.00	0.00	0.00	0.00	0.00	0.00	0.00	0.00	0.00	0.00	XXX
D6055		I	Implant connecting bar	0.00	0.00	0.00	0.00	0.00	0.00	0.00	0.00	0.00	0.00	XXX
D6056		N	Prefabricated abutment	0.00	0.00	0.00	0.00	0.00	0.00	0.00	0.00	0.00	0.00	XXX
D6057		N	Custom abutment	0.00	0.00	0.00	0.00	0.00	0.00	0.00	0.00	0.00	0.00	XXX
D6058		N	Abutment supported crown	0.00	0.00	0.00	0.00	0.00	0.00	0.00	0.00	0.00	0.00	XXX
D6059		N	Abutment supported mtl crown	0.00	0.00	0.00	0.00	0.00	0.00	0.00	0.00	0.00	0.00	XXX
D6060		N	Abutment supported mtl crown	0.00	0.00	0.00	0.00	0.00	0.00	0.00	0.00	0.00	0.00	XXX
D6061		N	Abutment supported mtl crown	0.00	0.00	0.00	0.00	0.00	0.00	0.00	0.00	0.00	0.00	XXX
D6062		N	Abutment supported mtl crown	0.00	0.00	0.00	0.00	0.00	0.00	0.00	0.00	0.00	0.00	XXX
D6063		N	Abutment supported mtl crown	0.00	0.00	0.00	0.00	0.00	0.00	0.00	0.00	0.00	0.00	XXX
D6064		N	Abutment supported mtl crown	0.00	0.00	0.00	0.00	0.00	0.00	0.00	0.00	0.00	0.00	XXX
D6065		N	Implant supported crown	0.00	0.00	0.00	0.00	0.00	0.00	0.00	0.00	0.00	0.00	XXX
D6066		N	Implant supported mtl crown	0.00	0.00	0.00	0.00	0.00	0.00	0.00	0.00	0.00	0.00	XXX
D6067		N	Implant supported mtl crown	0.00	0.00	0.00	0.00	0.00	0.00	0.00	0.00	0.00	0.00	XXX
D6068		N	Abutment supported retainer	0.00	0.00	0.00	0.00	0.00	0.00	0.00	0.00	0.00	0.00	XXX
D6069		N	Abutment supported retainer	0.00	0.00	0.00	0.00	0.00	0.00	0.00	0.00	0.00	0.00	XXX
D6070		N	Abutment supported retainer	0.00	0.00	0.00	0.00	0.00	0.00	0.00	0.00	0.00	0.00	XXX
D6071		N	Abutment supported retainer	0.00	0.00	0.00	0.00	0.00	0.00	0.00	0.00	0.00	0.00	XXX
D6072		N	Abutment supported retainer	0.00	0.00	0.00	0.00	0.00	0.00	0.00	0.00	0.00	0.00	XXX
D6073		N	Abutment supported retainer	0.00	0.00	0.00	0.00	0.00	0.00	0.00	0.00	0.00	0.00	XXX
D6074		N	Abutment supported retainer	0.00	0.00	0.00	0.00	0.00	0.00	0.00	0.00	0.00	0.00	XXX
D6075		N	Implant supported retainer	0.00	0.00	0.00	0.00	0.00	0.00	0.00	0.00	0.00	0.00	XXX
D6076		N	Implant supported retainer	0.00	0.00	0.00	0.00	0.00	0.00	0.00	0.00	0.00	0.00	XXX
D6077		N	Implant supported retainer	0.00	0.00	0.00	0.00	0.00	0.00	0.00	0.00	0.00	0.00	XXX
D6078		N	Implnt/abut suprtd fixd dent	0.00	0.00	0.00	0.00	0.00	0.00	0.00	0.00	0.00	0.00	XXX
D6079		N	Implnt/abut suprtd fixd dent	0.00	0.00	0.00	0.00	0.00	0.00	0.00	0.00	0.00	0.00	XXX
D6080		I	Implant maintenance	0.00	0.00	0.00	0.00	0.00	0.00	0.00	0.00	0.00	0.00	XXX
D6090		I	Repair implant	0.00	0.00	0.00	0.00	0.00	0.00	0.00	0.00	0.00	0.00	XXX
D6095		I	Odontics repr abutment	0.00	0.00	0.00	0.00	0.00	0.00	0.00	0.00	0.00	0.00	XXX
D6100		I	Removal of implant	0.00	0.00	0.00	0.00	0.00	0.00	0.00	0.00	0.00	0.00	XXX
D6199		I	Implant procedure	0.00	0.00	0.00	0.00	0.00	0.00	0.00	0.00	0.00	0.00	XXX
D6210		N	Prosthodont high noble metal	0.00	0.00	0.00	0.00	0.00	0.00	0.00	0.00	0.00	0.00	XXX
D6211		N	Bridge base metal cast	0.00	0.00	0.00	0.00	0.00	0.00	0.00	0.00	0.00	0.00	XXX
D6212		N	Bridge noble metal cast	0.00	0.00	0.00	0.00	0.00	0.00	0.00	0.00	0.00	0.00	XXX
D6240		N	Bridge porcelain high noble	0.00	0.00	0.00	0.00	0.00	0.00	0.00	0.00	0.00	0.00	XXX
D6241		N	Bridge porcelain base metal	0.00	0.00	0.00	0.00	0.00	0.00	0.00	0.00	0.00	0.00	XXX
D6242		N	Bridge porcelain nobel metal	0.00	0.00	0.00	0.00	0.00	0.00	0.00	0.00	0.00	0.00	XXX
D6245		N	Bridge porcelain/ceramic	0.00	0.00	0.00	0.00	0.00	0.00	0.00	0.00	0.00	0.00	XXX
D6250		N	Bridge resin w/high noble	0.00	0.00	0.00	0.00	0.00	0.00	0.00	0.00	0.00	0.00	XXX
D6251		N	Bridge resin base metal	0.00	0.00	0.00	0.00	0.00	0.00	0.00	0.00	0.00	0.00	XXX
D6252		N	Bridge resin w/noble metal	0.00	0.00	0.00	0.00	0.00	0.00	0.00	0.00	0.00	0.00	XXX
D6519		N	Inlay/onlay porce/ceramic	0.00	0.00	0.00	0.00	0.00	0.00	0.00	0.00	0.00	0.00	XXX
D6520		N	Dental retainer two surfaces	0.00	0.00	0.00	0.00	0.00	0.00	0.00	0.00	0.00	0.00	XXX
D6530		N	Retainer metallic 3+ surface	0.00	0.00	0.00	0.00	0.00	0.00	0.00	0.00	0.00	0.00	XXX
D6543		N	Dental retainr onlay 3 surf	0.00	0.00	0.00	0.00	0.00	0.00	0.00	0.00	0.00	0.00	XXX
D6544		N	Dental retainr onlay 4/more	0.00	0.00	0.00	0.00	0.00	0.00	0.00	0.00	0.00	0.00	XXX
D6545		N	Dental retainr cast metl	0.00	0.00	0.00	0.00	0.00	0.00	0.00	0.00	0.00	0.00	XXX
D6548		N	Porcelain/ceramic retainer	0.00	0.00	0.00	0.00	0.00	0.00	0.00	0.00	0.00	0.00	XXX
D6720		N	Retain crown resin w hi nble	0.00	0.00	0.00	0.00	0.00	0.00	0.00	0.00	0.00	0.00	XXX
D6721		N	Crown resin w/base metal	0.00	0.00	0.00	0.00	0.00	0.00	0.00	0.00	0.00	0.00	XXX
D6722		N	Crown resin w/noble metal	0.00	0.00	0.00	0.00	0.00	0.00	0.00	0.00	0.00	0.00	XXX
D6740		N	Crown porcelain/ceramic	0.00	0.00	0.00	0.00	0.00	0.00	0.00	0.00	0.00	0.00	XXX
D6750		N	Crown porcelain high noble	0.00	0.00	0.00	0.00	0.00	0.00	0.00	0.00	0.00	0.00	XXX
D6751		N	Crown porcelain base metal	0.00	0.00	0.00	0.00	0.00	0.00	0.00	0.00	0.00	0.00	XXX
D6752		N	Crown porcelain noble metal	0.00	0.00	0.00	0.00	0.00	0.00	0.00	0.00	0.00	0.00	XXX
D6780		N	Crown 3/4 high noble metal	0.00	0.00	0.00	0.00	0.00	0.00	0.00	0.00	0.00	0.00	XXX
D6781		N	Crown 3/4 cast based metal	0.00	0.00	0.00	0.00	0.00	0.00	0.00	0.00	0.00	0.00	XXX
D6782		N	Crown 3/4 cast noble metal	0.00	0.00	0.00	0.00	0.00	0.00	0.00	0.00	0.00	0.00	XXX

[1] CPT codes and descriptions only are copyright 2000 American Medical Association. All Rights Reserved. Applicable FARS/DFARS Apply.
[2] Copyright 1994 American Dental Association. All rights reserved.
[3] + Indicates RVUs are not used for Medicare payment.
[4] PE RVUs = Practice Expense Relative Value Units.

ADDENDUM B.—RELATIVE VALUE UNITS (RVU'S) AND RELATED INFORMATION—Continued

CPT[1]/ HCPCS[2]	MOD	Status	Description	Physician Work RVUs[3]	Fully Implemented Non-Facility PE RVUs	Year 2001 Transitional Non-Facility PE RVUs	Fully Implemented Facility PE RVUs	Year 2001 Transitional Facility PE RVUs	Mal-Practice RVUs	Fully Implemented Non-Facility Total	Year 2001 Transitional Non-Facility Total	Fully Implemented Facility Total	Year 2001 Transitional Facility Total	Global
D6783		N	Crown 3/4 porcelain/ceramic	0.00	0.00	0.00	0.00	0.00	0.00	0.00	0.00	0.00	0.00	XXX
D6790		N	Crown full high noble metal	0.00	0.00	0.00	0.00	0.00	0.00	0.00	0.00	0.00	0.00	XXX
D6791		N	Crown full base metal cast	0.00	0.00	0.00	0.00	0.00	0.00	0.00	0.00	0.00	0.00	XXX
D6792		N	Crown full noble metal cast	0.00	0.00	0.00	0.00	0.00	0.00	0.00	0.00	0.00	0.00	XXX
D6920		R	Dental connector bar	0.00	0.00	0.00	0.00	0.00	0.00	0.00	0.00	0.00	0.00	YYY
D6930		N	Dental recement bridge	0.00	0.00	0.00	0.00	0.00	0.00	0.00	0.00	0.00	0.00	XXX
D6940		N	Stress breaker	0.00	0.00	0.00	0.00	0.00	0.00	0.00	0.00	0.00	0.00	XXX
D6950		N	Precision attachment	0.00	0.00	0.00	0.00	0.00	0.00	0.00	0.00	0.00	0.00	XXX
D6970		N	Post & core plus retainer	0.00	0.00	0.00	0.00	0.00	0.00	0.00	0.00	0.00	0.00	XXX
D6971		N	Cast post bridge retainer	0.00	0.00	0.00	0.00	0.00	0.00	0.00	0.00	0.00	0.00	XXX
D6972		N	Prefab post & core plus reta	0.00	0.00	0.00	0.00	0.00	0.00	0.00	0.00	0.00	0.00	XXX
D6973		N	Core build up for retainer	0.00	0.00	0.00	0.00	0.00	0.00	0.00	0.00	0.00	0.00	XXX
D6975		N	Coping metal	0.00	0.00	0.00	0.00	0.00	0.00	0.00	0.00	0.00	0.00	XXX
D6976		N	Each addtnl cast post	0.00	0.00	0.00	0.00	0.00	0.00	0.00	0.00	0.00	0.00	XXX
D6977		N	Each addtl prefab post	0.00	0.00	0.00	0.00	0.00	0.00	0.00	0.00	0.00	0.00	XXX
D6980		N	Bridge repair	0.00	0.00	0.00	0.00	0.00	0.00	0.00	0.00	0.00	0.00	XXX
D6999		N	Fixed prosthodontic proc	0.00	0.00	0.00	0.00	0.00	0.00	0.00	0.00	0.00	0.00	XXX
D7110		R	Oral surgery single tooth	0.00	0.00	0.00	0.00	0.00	0.00	0.00	0.00	0.00	0.00	YYY
D7120		R	Each add tooth extraction	0.00	0.00	0.00	0.00	0.00	0.00	0.00	0.00	0.00	0.00	YYY
D7130		R	Tooth root removal	0.00	0.00	0.00	0.00	0.00	0.00	0.00	0.00	0.00	0.00	YYY
D7210		R	Rem imp tooth w mucoper flp	0.00	0.00	0.00	0.00	0.00	0.00	0.00	0.00	0.00	0.00	YYY
D7220		R	Impact tooth remov soft tiss	0.00	0.00	0.00	0.00	0.00	0.00	0.00	0.00	0.00	0.00	YYY
D7230		R	Impact tooth remov part bony	0.00	0.00	0.00	0.00	0.00	0.00	0.00	0.00	0.00	0.00	YYY
D7240		R	Impact tooth remov comp bony	0.00	0.00	0.00	0.00	0.00	0.00	0.00	0.00	0.00	0.00	YYY
D7241		R	Impact tooth rem bony w/comp	0.00	0.00	0.00	0.00	0.00	0.00	0.00	0.00	0.00	0.00	YYY
D7250		R	Tooth root removal	0.00	0.00	0.00	0.00	0.00	0.00	0.00	0.00	0.00	0.00	YYY
D7260		R	Oral antral fistula closure	0.00	0.00	0.00	0.00	0.00	0.00	0.00	0.00	0.00	0.00	YYY
D7270		N	Tooth reimplantation	0.00	0.00	0.00	0.00	0.00	0.00	0.00	0.00	0.00	0.00	XXX
D7272		N	Tooth transplantation	0.00	0.00	0.00	0.00	0.00	0.00	0.00	0.00	0.00	0.00	XXX
D7280		N	Exposure impact tooth orthod	0.00	0.00	0.00	0.00	0.00	0.00	0.00	0.00	0.00	0.00	XXX
D7281		N	Exposure tooth aid eruption	0.00	0.00	0.00	0.00	0.00	0.00	0.00	0.00	0.00	0.00	XXX
D7285		I	Biopsy of oral tissue hard	0.00	0.00	0.00	0.00	0.00	0.00	0.00	0.00	0.00	0.00	XXX
D7286		I	Biopsy of oral tissue soft	0.00	0.00	0.00	0.00	0.00	0.00	0.00	0.00	0.00	0.00	XXX
D7290		N	Repositioning of teeth	0.00	0.00	0.00	0.00	0.00	0.00	0.00	0.00	0.00	0.00	XXX
D7291		R	Transseptal fiberotomy	0.00	0.00	0.00	0.00	0.00	0.00	0.00	0.00	0.00	0.00	YYY
D7310		I	Alveoplasty w/ extraction	0.00	0.00	0.00	0.00	0.00	0.00	0.00	0.00	0.00	0.00	XXX
D7320		I	Alveoplasty w/o extraction	0.00	0.00	0.00	0.00	0.00	0.00	0.00	0.00	0.00	0.00	XXX
D7340		I	Vestibuloplasty ridge extens	0.00	0.00	0.00	0.00	0.00	0.00	0.00	0.00	0.00	0.00	XXX
D7350		I	Vestibuloplasty exten graft	0.00	0.00	0.00	0.00	0.00	0.00	0.00	0.00	0.00	0.00	XXX
D7410		I	Rad exc lesion up to 1.25 cm	0.00	0.00	0.00	0.00	0.00	0.00	0.00	0.00	0.00	0.00	XXX
D7420		I	Lesion > 1.25 cm	0.00	0.00	0.00	0.00	0.00	0.00	0.00	0.00	0.00	0.00	XXX
D7430		I	Exc benign tumor to 1.25 cm	0.00	0.00	0.00	0.00	0.00	0.00	0.00	0.00	0.00	0.00	XXX
D7431		I	Benign tumor exc > 1.25 cm	0.00	0.00	0.00	0.00	0.00	0.00	0.00	0.00	0.00	0.00	XXX
D7440		I	Malig tumor exc to 1.25 cm	0.00	0.00	0.00	0.00	0.00	0.00	0.00	0.00	0.00	0.00	XXX
D7441		I	Malig tumor > 1.25 cm	0.00	0.00	0.00	0.00	0.00	0.00	0.00	0.00	0.00	0.00	XXX
D7450		I	Rem odontogen cyst to 1.25cm	0.00	0.00	0.00	0.00	0.00	0.00	0.00	0.00	0.00	0.00	XXX
D7451		I	Rem odontogen cyst > 1.25 cm	0.00	0.00	0.00	0.00	0.00	0.00	0.00	0.00	0.00	0.00	XXX
D7460		I	Rem nonodonto cyst to 1.25cm	0.00	0.00	0.00	0.00	0.00	0.00	0.00	0.00	0.00	0.00	XXX
D7461		I	Rem nonodonto cyst > 1.25 cm	0.00	0.00	0.00	0.00	0.00	0.00	0.00	0.00	0.00	0.00	XXX
D7465		I	Lesion destruction	0.00	0.00	0.00	0.00	0.00	0.00	0.00	0.00	0.00	0.00	XXX
D7471		I	Rem exostosis any site	0.00	0.00	0.00	0.00	0.00	0.00	0.00	0.00	0.00	0.00	XXX
D7480		I	Partial ostectomy	0.00	0.00	0.00	0.00	0.00	0.00	0.00	0.00	0.00	0.00	XXX
D7490		I	Mandible resection	0.00	0.00	0.00	0.00	0.00	0.00	0.00	0.00	0.00	0.00	XXX
D7510		I	I&d absc intraoral soft tiss	0.00	0.00	0.00	0.00	0.00	0.00	0.00	0.00	0.00	0.00	XXX
D7520		I	I&d abscess extraoral	0.00	0.00	0.00	0.00	0.00	0.00	0.00	0.00	0.00	0.00	XXX
D7530		I	Removal fb skin/areolar tiss	0.00	0.00	0.00	0.00	0.00	0.00	0.00	0.00	0.00	0.00	XXX
D7540		I	Removal of fb reaction	0.00	0.00	0.00	0.00	0.00	0.00	0.00	0.00	0.00	0.00	XXX
D7550		I	Removal of sloughed off bone	0.00	0.00	0.00	0.00	0.00	0.00	0.00	0.00	0.00	0.00	XXX
D7560		I	Maxillary sinusotomy	0.00	0.00	0.00	0.00	0.00	0.00	0.00	0.00	0.00	0.00	XXX
D7610		I	Maxilla open reduct simple	0.00	0.00	0.00	0.00	0.00	0.00	0.00	0.00	0.00	0.00	XXX
D7620		I	Clsd reduct simpl maxilla fx	0.00	0.00	0.00	0.00	0.00	0.00	0.00	0.00	0.00	0.00	XXX
D7630		I	Open red simpl mandible fx	0.00	0.00	0.00	0.00	0.00	0.00	0.00	0.00	0.00	0.00	XXX
D7640		I	Clsd red simpl mandible fx	0.00	0.00	0.00	0.00	0.00	0.00	0.00	0.00	0.00	0.00	XXX
D7650		I	Open red simp malar/zygom fx	0.00	0.00	0.00	0.00	0.00	0.00	0.00	0.00	0.00	0.00	XXX
D7660		I	Clsd red simp malar/zygom fx	0.00	0.00	0.00	0.00	0.00	0.00	0.00	0.00	0.00	0.00	XXX
D7670		I	Closd rductn splint alveolus	0.00	0.00	0.00	0.00	0.00	0.00	0.00	0.00	0.00	0.00	XXX
D7680		I	Reduct simple facial bone fx	0.00	0.00	0.00	0.00	0.00	0.00	0.00	0.00	0.00	0.00	XXX
D7710		I	Maxilla open reduct compound	0.00	0.00	0.00	0.00	0.00	0.00	0.00	0.00	0.00	0.00	XXX
D7720		I	Clsd reduct compd maxilla fx	0.00	0.00	0.00	0.00	0.00	0.00	0.00	0.00	0.00	0.00	XXX
D7730		I	Open reduct compd mandble fx	0.00	0.00	0.00	0.00	0.00	0.00	0.00	0.00	0.00	0.00	XXX
D7740		I	Clsd reduct compd mandble fx	0.00	0.00	0.00	0.00	0.00	0.00	0.00	0.00	0.00	0.00	XXX
D7750		I	Open red comp malar/zygma fx	0.00	0.00	0.00	0.00	0.00	0.00	0.00	0.00	0.00	0.00	XXX
D7760		I	Clsd red comp malar/zygma fx	0.00	0.00	0.00	0.00	0.00	0.00	0.00	0.00	0.00	0.00	XXX
D7770		I	Open reduc compd alveolus fx	0.00	0.00	0.00	0.00	0.00	0.00	0.00	0.00	0.00	0.00	XXX
D7780		I	Reduct compnd facial bone fx	0.00	0.00	0.00	0.00	0.00	0.00	0.00	0.00	0.00	0.00	XXX
D7810		I	Tmj open reduct-dislocation	0.00	0.00	0.00	0.00	0.00	0.00	0.00	0.00	0.00	0.00	XXX
D7820		I	Closed tmp manipulation	0.00	0.00	0.00	0.00	0.00	0.00	0.00	0.00	0.00	0.00	XXX
D7830		I	Tmj manipulation under anest	0.00	0.00	0.00	0.00	0.00	0.00	0.00	0.00	0.00	0.00	XXX
D7840		I	Removal of tmj condyle	0.00	0.00	0.00	0.00	0.00	0.00	0.00	0.00	0.00	0.00	XXX
D7850		I	Tmj meniscectomy	0.00	0.00	0.00	0.00	0.00	0.00	0.00	0.00	0.00	0.00	XXX
D7852		I	Tmj repair of joint disc	0.00	0.00	0.00	0.00	0.00	0.00	0.00	0.00	0.00	0.00	XXX
D7854		I	Tmj excisn of joint membrane	0.00	0.00	0.00	0.00	0.00	0.00	0.00	0.00	0.00	0.00	XXX
D7856		I	Tmj cutting of a muscle	0.00	0.00	0.00	0.00	0.00	0.00	0.00	0.00	0.00	0.00	XXX

[1] CPT codes and descriptions only are copyright 2000 American Medical Association. All Rights Reserved. Applicable FARS/DFARS Apply.
[2] Copyright 1994 American Dental Association. All rights reserved.
[3] + Indicates RVUs are not used for Medicare payment.
[4] PE RVUs = Practice Expense Relative Value Units.

ADDENDUM B.—RELATIVE VALUE UNITS (RVU'S) AND RELATED INFORMATION—Continued

CPT[1]/ HCPCS[2]	MOD	Status	Description	Physician Work RVUs[3]	Fully Implemented Non-Facility PE RVUs	Year 2001 Transitional Non-Facility PE RVUs	Fully Implemented Facility PE RVUs	Year 2001 Transitional Facility PE RVUs	Mal-Practice RVUs	Fully Implemented Non-Facility Total	Year 2001 Transitional Non-Facility Total	Fully Implemented Facility Total	Year 2001 Transitional Facility Total	Global
D7858		I	Tmj reconstruction	0.00	0.00	0.00	0.00	0.00	0.00	0.00	0.00	0.00	0.00	XXX
D7860		I	Tmj cutting into joint	0.00	0.00	0.00	0.00	0.00	0.00	0.00	0.00	0.00	0.00	XXX
D7865		I	Tmj reshaping components	0.00	0.00	0.00	0.00	0.00	0.00	0.00	0.00	0.00	0.00	XXX
D7870		I	Tmj aspiration joint fluid	0.00	0.00	0.00	0.00	0.00	0.00	0.00	0.00	0.00	0.00	XXX
D7871		N	Lysis + lavage w catheters	0.00	0.00	0.00	0.00	0.00	0.00	0.00	0.00	0.00	0.00	XXX
D7872		I	Tmj diagnostic arthroscopy	0.00	0.00	0.00	0.00	0.00	0.00	0.00	0.00	0.00	0.00	XXX
D7873		I	Tmj arthroscopy lysis adhesn	0.00	0.00	0.00	0.00	0.00	0.00	0.00	0.00	0.00	0.00	XXX
D7874		I	Tmj arthroscopy disc reposit	0.00	0.00	0.00	0.00	0.00	0.00	0.00	0.00	0.00	0.00	XXX
D7875		I	Tmj arthroscopy synovectomy	0.00	0.00	0.00	0.00	0.00	0.00	0.00	0.00	0.00	0.00	XXX
D7876		I	Tmj arthroscopy discectomy	0.00	0.00	0.00	0.00	0.00	0.00	0.00	0.00	0.00	0.00	XXX
D7877		I	Tmj arthroscopy debridement	0.00	0.00	0.00	0.00	0.00	0.00	0.00	0.00	0.00	0.00	XXX
D7880		I	Occlusal orthotic appliance	0.00	0.00	0.00	0.00	0.00	0.00	0.00	0.00	0.00	0.00	XXX
D7899		I	Tmj unspecified therapy	0.00	0.00	0.00	0.00	0.00	0.00	0.00	0.00	0.00	0.00	XXX
D7910		I	Dent sutur recent wnd to 5cm	0.00	0.00	0.00	0.00	0.00	0.00	0.00	0.00	0.00	0.00	XXX
D7911		I	Dental suture wound to 5 cm	0.00	0.00	0.00	0.00	0.00	0.00	0.00	0.00	0.00	0.00	XXX
D7912		I	Suture complicate wnd > 5 cm	0.00	0.00	0.00	0.00	0.00	0.00	0.00	0.00	0.00	0.00	XXX
D7920		I	Dental skin graft	0.00	0.00	0.00	0.00	0.00	0.00	0.00	0.00	0.00	0.00	XXX
D7940		R	Reshaping bone orthognathic	0.00	0.00	0.00	0.00	0.00	0.00	0.00	0.00	0.00	0.00	YYY
D7941		I	Bone cutting ramus closed	0.00	0.00	0.00	0.00	0.00	0.00	0.00	0.00	0.00	0.00	XXX
D7943		I	Cutting ramus open w/graft	0.00	0.00	0.00	0.00	0.00	0.00	0.00	0.00	0.00	0.00	XXX
D7944		I	Bone cutting segmented	0.00	0.00	0.00	0.00	0.00	0.00	0.00	0.00	0.00	0.00	XXX
D7945		I	Bone cutting body mandible	0.00	0.00	0.00	0.00	0.00	0.00	0.00	0.00	0.00	0.00	XXX
D7946		I	Reconstruction maxilla total	0.00	0.00	0.00	0.00	0.00	0.00	0.00	0.00	0.00	0.00	XXX
D7947		I	Reconstruct maxilla segment	0.00	0.00	0.00	0.00	0.00	0.00	0.00	0.00	0.00	0.00	XXX
D7948		I	Reconstruct midface no graft	0.00	0.00	0.00	0.00	0.00	0.00	0.00	0.00	0.00	0.00	XXX
D7949		I	Reconstruct midface w/graft	0.00	0.00	0.00	0.00	0.00	0.00	0.00	0.00	0.00	0.00	XXX
D7950		I	Mandible graft	0.00	0.00	0.00	0.00	0.00	0.00	0.00	0.00	0.00	0.00	XXX
D7955		I	Repair maxillofacial defects	0.00	0.00	0.00	0.00	0.00	0.00	0.00	0.00	0.00	0.00	XXX
D7960		I	Frenulectomy/frenulotomy	0.00	0.00	0.00	0.00	0.00	0.00	0.00	0.00	0.00	0.00	XXX
D7970		I	Excision hyperplastic tissue	0.00	0.00	0.00	0.00	0.00	0.00	0.00	0.00	0.00	0.00	XXX
D7971		I	Excision pericoronal gingiva	0.00	0.00	0.00	0.00	0.00	0.00	0.00	0.00	0.00	0.00	XXX
D7980		I	Sialolithotomy	0.00	0.00	0.00	0.00	0.00	0.00	0.00	0.00	0.00	0.00	XXX
D7981		I	Excision of salivary gland	0.00	0.00	0.00	0.00	0.00	0.00	0.00	0.00	0.00	0.00	XXX
D7982		I	Sialodochoplasty	0.00	0.00	0.00	0.00	0.00	0.00	0.00	0.00	0.00	0.00	XXX
D7983		I	Closure of salivary fistula	0.00	0.00	0.00	0.00	0.00	0.00	0.00	0.00	0.00	0.00	XXX
D7990		I	Emergency tracheotomy	0.00	0.00	0.00	0.00	0.00	0.00	0.00	0.00	0.00	0.00	XXX
D7991		I	Dental coronoidectomy	0.00	0.00	0.00	0.00	0.00	0.00	0.00	0.00	0.00	0.00	XXX
D7995		I	Synthetic graft facial bones	0.00	0.00	0.00	0.00	0.00	0.00	0.00	0.00	0.00	0.00	XXX
D7996		I	Implant mandible for augment	0.00	0.00	0.00	0.00	0.00	0.00	0.00	0.00	0.00	0.00	XXX
D7997		N	Appliance removal	0.00	0.00	0.00	0.00	0.00	0.00	0.00	0.00	0.00	0.00	XXX
D7999		I	Oral surgery procedure	0.00	0.00	0.00	0.00	0.00	0.00	0.00	0.00	0.00	0.00	XXX
D8010		N	Limited dental tx primary	0.00	0.00	0.00	0.00	0.00	0.00	0.00	0.00	0.00	0.00	XXX
D8020		N	Limited dental tx transition	0.00	0.00	0.00	0.00	0.00	0.00	0.00	0.00	0.00	0.00	XXX
D8030		N	Limited dental tx adolescent	0.00	0.00	0.00	0.00	0.00	0.00	0.00	0.00	0.00	0.00	XXX
D8040		N	Limited dental tx adult	0.00	0.00	0.00	0.00	0.00	0.00	0.00	0.00	0.00	0.00	XXX
D8050		N	Intercep dental tx primary	0.00	0.00	0.00	0.00	0.00	0.00	0.00	0.00	0.00	0.00	XXX
D8060		N	Intercep dental tx transitn	0.00	0.00	0.00	0.00	0.00	0.00	0.00	0.00	0.00	0.00	XXX
D8070		N	Compre dental tx transition	0.00	0.00	0.00	0.00	0.00	0.00	0.00	0.00	0.00	0.00	XXX
D8080		N	Compre dental tx adolescent	0.00	0.00	0.00	0.00	0.00	0.00	0.00	0.00	0.00	0.00	XXX
D8090		N	Compre dental tx adult	0.00	0.00	0.00	0.00	0.00	0.00	0.00	0.00	0.00	0.00	XXX
D8210		N	Orthodontic rem appliance tx	0.00	0.00	0.00	0.00	0.00	0.00	0.00	0.00	0.00	0.00	XXX
D8220		N	Fixed appliance therapy habt	0.00	0.00	0.00	0.00	0.00	0.00	0.00	0.00	0.00	0.00	XXX
D8660		N	Preorthodontic tx visit	0.00	0.00	0.00	0.00	0.00	0.00	0.00	0.00	0.00	0.00	XXX
D8670		N	Periodic orthodontc tx visit	0.00	0.00	0.00	0.00	0.00	0.00	0.00	0.00	0.00	0.00	XXX
D8680		N	Orthodontic retention	0.00	0.00	0.00	0.00	0.00	0.00	0.00	0.00	0.00	0.00	XXX
D8690		N	Orthodontic treatment	0.00	0.00	0.00	0.00	0.00	0.00	0.00	0.00	0.00	0.00	XXX
D8691		N	Repair ortho appliance	0.00	0.00	0.00	0.00	0.00	0.00	0.00	0.00	0.00	0.00	XXX
D8692		N	Replacement retainer	0.00	0.00	0.00	0.00	0.00	0.00	0.00	0.00	0.00	0.00	XXX
D8999		N	Orthodontic procedure	0.00	0.00	0.00	0.00	0.00	0.00	0.00	0.00	0.00	0.00	XXX
D9110		R	Tx dental pain minor proc	0.00	0.00	0.00	0.00	0.00	0.00	0.00	0.00	0.00	0.00	YYY
D9210		I	Dent anesthesia w/o surgery	0.00	0.00	0.00	0.00	0.00	0.00	0.00	0.00	0.00	0.00	XXX
D9211		I	Regional block anesthesia	0.00	0.00	0.00	0.00	0.00	0.00	0.00	0.00	0.00	0.00	XXX
D9212		I	Trigeminal block anesthesia	0.00	0.00	0.00	0.00	0.00	0.00	0.00	0.00	0.00	0.00	XXX
D9215		I	Local anesthesia	0.00	0.00	0.00	0.00	0.00	0.00	0.00	0.00	0.00	0.00	XXX
D9220		I	General anesthesia	0.00	0.00	0.00	0.00	0.00	0.00	0.00	0.00	0.00	0.00	XXX
D9221		I	General anesthesia ea ad 15m	0.00	0.00	0.00	0.00	0.00	0.00	0.00	0.00	0.00	0.00	XXX
D9230		R	Analgesia	0.00	0.00	0.00	0.00	0.00	0.00	0.00	0.00	0.00	0.00	YYY
D9241		I	Intravenous sedation	0.00	0.00	0.00	0.00	0.00	0.00	0.00	0.00	0.00	0.00	XXX
D9242		I	IV sedation ea ad 30 m	0.00	0.00	0.00	0.00	0.00	0.00	0.00	0.00	0.00	0.00	XXX
D9248		R	Sedation (non-iv)	0.00	0.00	0.00	0.00	0.00	0.00	0.00	0.00	0.00	0.00	XXX
D9310		I	Dental consultation	0.00	0.00	0.00	0.00	0.00	0.00	0.00	0.00	0.00	0.00	XXX
D9410		I	Dental house call	0.00	0.00	0.00	0.00	0.00	0.00	0.00	0.00	0.00	0.00	XXX
D9420		I	Hospital call	0.00	0.00	0.00	0.00	0.00	0.00	0.00	0.00	0.00	0.00	XXX
D9430		I	Office visit during hours	0.00	0.00	0.00	0.00	0.00	0.00	0.00	0.00	0.00	0.00	XXX
D9440		I	Office visit after hours	0.00	0.00	0.00	0.00	0.00	0.00	0.00	0.00	0.00	0.00	XXX
D9610		I	Dent therapeutic drug inject	0.00	0.00	0.00	0.00	0.00	0.00	0.00	0.00	0.00	0.00	XXX
D9630		R	Other drugs/medicaments	0.00	0.00	0.00	0.00	0.00	0.00	0.00	0.00	0.00	0.00	YYY
D9910		N	Dent appl desensitizing med	0.00	0.00	0.00	0.00	0.00	0.00	0.00	0.00	0.00	0.00	XXX
D9911		N	Appl desensitizing resin	0.00	0.00	0.00	0.00	0.00	0.00	0.00	0.00	0.00	0.00	XXX
D9920		N	Behavior management	0.00	0.00	0.00	0.00	0.00	0.00	0.00	0.00	0.00	0.00	XXX
D9930		R	Treatment of complications	0.00	0.00	0.00	0.00	0.00	0.00	0.00	0.00	0.00	0.00	YYY
D9940		R	Dental occlusal guard	0.00	0.00	0.00	0.00	0.00	0.00	0.00	0.00	0.00	0.00	YYY
D9941		N	Fabrication athletic guard	0.00	0.00	0.00	0.00	0.00	0.00	0.00	0.00	0.00	0.00	XXX

[1] CPT codes and descriptions only are copyright 2000 American Medical Association. All Rights Reserved. Applicable FARS/DFARS Apply.
[2] Copyright 1994 American Dental Association. All rights reserved.
[3] + Indicates RVUs are not used for Medicare payment.
[4] PE RVUs = Practice Expense Relative Value Units.

ADDENDUM B.—RELATIVE VALUE UNITS (RVU'S) AND RELATED INFORMATION—Continued

CPT[1]/ HCPCS[2]	MOD	Status	Description	Physician Work RVUs[3]	Fully Implemented Non-Facility PE RVUs	Year 2001 Transitional Non-Facility PE RVUs	Fully Implemented Facility PE RVUs	Year 2001 Transitional Facility PE RVUs	Mal-Practice RVUs	Fully Implemented Non-Facility Total	Year 2001 Transitional Non-Facility Total	Fully Implemented Facility Total	Year 2001 Transitional Facility Total	Global
D9950		R	Occlusion analysis	0.00	0.00	0.00	0.00	0.00	0.00	0.00	0.00	0.00	0.00	YYY
D9951		R	Limited occlusal adjustment	0.00	0.00	0.00	0.00	0.00	0.00	0.00	0.00	0.00	0.00	YYY
D9952		R	Complete occlusal adjustment	0.00	0.00	0.00	0.00	0.00	0.00	0.00	0.00	0.00	0.00	YYY
D9970		N	Enamel microabrasion	0.00	0.00	0.00	0.00	0.00	0.00	0.00	0.00	0.00	0.00	XXX
D9971		N	Odontoplasty 1-2 teeth	0.00	0.00	0.00	0.00	0.00	0.00	0.00	0.00	0.00	0.00	XXX
D9972		N	Extrnl bleaching per arch	0.00	0.00	0.00	0.00	0.00	0.00	0.00	0.00	0.00	0.00	XXX
D9973		N	Extrnl bleaching per tooth	0.00	0.00	0.00	0.00	0.00	0.00	0.00	0.00	0.00	0.00	XXX
D9974		N	Intrnl bleaching per tooth	0.00	0.00	0.00	0.00	0.00	0.00	0.00	0.00	0.00	0.00	XXX
D9999		I	Adjunctive procedure	0.00	0.00	0.00	0.00	0.00	0.00	0.00	0.00	0.00	0.00	XXX
G0001		X	Drawing blood for specimen	0.00	0.00	0.00	0.00	0.00	0.00	0.00	0.00	0.00	0.00	XXX
G0002		A	Temporary urinary catheter	0.50	3.00	2.44	0.17	0.32	0.03	3.53	2.97	0.70	0.85	000
G0004		A	ECG transm phys review & int	0.52	7.41	7.54	NA	NA	0.45	8.38	8.51	NA	NA	XXX
G0005		A	ECG 24 hour recording	0.00	1.23	1.24	NA	NA	0.07	1.30	1.31	NA	NA	XXX
G0006		A	ECG transmission & analysis	0.00	5.97	6.03	NA	NA	0.36	6.33	6.39	NA	NA	XXX
G0007		A	ECG phy review & interpret	0.52	0.21	0.27	0.21	0.27	0.02	0.75	0.81	0.75	0.81	XXX
G0008		X	Admin influenza virus vac	0.00	0.00	0.00	0.00	0.00	0.00	0.00	0.00	0.00	0.00	XXX
G0009		X	Admin pneumococcal vaccine	0.00	0.00	0.00	0.00	0.00	0.00	0.00	0.00	0.00	0.00	XXX
G0010		X	Admin hepatitis b vaccine	0.00	0.00	0.00	0.00	0.00	0.00	0.00	0.00	0.00	0.00	XXX
G0015		A	Post symptom ECG tracing	0.00	5.97	6.03	NA	NA	0.36	6.33	6.39	NA	NA	XXX
G0016		A	Post symptom ECG md review	0.52	0.23	0.28	0.23	0.28	0.02	0.77	0.82	0.77	0.82	XXX
G0025		A	Collagen skin test kit	0.00	0.00	0.26	0.00	0.26	0.00	0.00	0.26	0.00	0.26	XXX
G0026		X	Fecal leukocyte examination	0.00	0.00	0.00	0.00	0.00	0.00	0.00	0.00	0.00	0.00	XXX
G0027		X	Semen analysis	0.00	0.00	0.00	0.00	0.00	0.00	0.00	0.00	0.00	0.00	XXX
G0030		C	PET imaging prev PET single	0.00	0.00	0.00	0.00	0.00	0.00	0.00	0.00	0.00	0.00	XXX
G0030	26	A	PET imaging prev PET single	1.50	0.52	0.52	0.52	0.52	0.04	2.06	2.06	2.06	2.06	XXX
G0030	TC	C	PET imaging prev PET single	0.00	0.00	0.00	0.00	0.00	0.00	0.00	0.00	0.00	0.00	XXX
G0031		C	PET imaging prev PET multple	0.00	0.00	0.00	0.00	0.00	0.00	0.00	0.00	0.00	0.00	XXX
G0031	26	A	PET imaging prev PET multple	1.87	0.70	0.70	0.70	0.70	0.06	2.63	2.63	2.63	2.63	XXX
G0031	TC	C	PET imaging prev PET multple	0.00	0.00	0.00	0.00	0.00	0.00	0.00	0.00	0.00	0.00	XXX
G0032		C	PET follow SPECT 78464 singl	0.00	0.00	0.00	0.00	0.00	0.00	0.00	0.00	0.00	0.00	XXX
G0032	26	A	PET follow SPECT 78464 singl	1.50	0.52	0.52	0.52	0.52	0.05	2.07	2.07	2.07	2.07	XXX
G0032	TC	C	PET follow SPECT 78464 singl	0.00	0.00	0.00	0.00	0.00	0.00	0.00	0.00	0.00	0.00	XXX
G0033		C	PET follow SPECT 78464 mult	0.00	0.00	0.00	0.00	0.00	0.00	0.00	0.00	0.00	0.00	XXX
G0033	26	A	PET follow SPECT 78464 mult	1.87	0.70	0.70	0.70	0.70	0.06	2.63	2.63	2.63	2.63	XXX
G0033	TC	C	PET follow SPECT 78464 mult	0.00	0.00	0.00	0.00	0.00	0.00	0.00	0.00	0.00	0.00	XXX
G0034		C	PET follow SPECT 76865 singl	0.00	0.00	0.00	0.00	0.00	0.00	0.00	0.00	0.00	0.00	XXX
G0034	26	A	PET follow SPECT 76865 singl	1.50	0.52	0.52	0.52	0.52	0.05	2.07	2.07	2.07	2.07	XXX
G0034	TC	C	PET follow SPECT 76865 singl	0.00	0.00	0.00	0.00	0.00	0.00	0.00	0.00	0.00	0.00	XXX
G0035		C	PET follow SPECT 78465 mult	0.00	0.00	0.00	0.00	0.00	0.00	0.00	0.00	0.00	0.00	XXX
G0035	26	A	PET follow SPECT 78465 mult	1.87	0.70	0.70	0.70	0.70	0.06	2.63	2.63	2.63	2.63	XXX
G0035	TC	C	PET follow SPECT 78465 mult	0.00	0.00	0.00	0.00	0.00	0.00	0.00	0.00	0.00	0.00	XXX
G0036		C	PET follow cornry angio sing	0.00	0.00	0.00	0.00	0.00	0.00	0.00	0.00	0.00	0.00	XXX
G0036	26	A	PET follow cornry angio sing	1.50	0.52	0.52	0.52	0.52	0.04	2.06	2.06	2.06	2.06	XXX
G0036	TC	C	PET follow cornry angio sing	0.00	0.00	0.00	0.00	0.00	0.00	0.00	0.00	0.00	0.00	XXX
G0037		C	PET follow cornry angio mult	0.00	0.00	0.00	0.00	0.00	0.00	0.00	0.00	0.00	0.00	XXX
G0037	26	A	PET follow cornry angio mult	1.87	0.70	0.70	0.70	0.70	0.06	2.63	2.63	2.63	2.63	XXX
G0037	TC	C	PET follow cornry angio mult	0.00	0.00	0.00	0.00	0.00	0.00	0.00	0.00	0.00	0.00	XXX
G0038		C	PET follow myocard perf sing	0.00	0.00	0.00	0.00	0.00	0.00	0.00	0.00	0.00	0.00	XXX
G0038	26	A	PET follow myocard perf sing	1.50	0.52	0.52	0.52	0.52	0.04	2.06	2.06	2.06	2.06	XXX
G0038	TC	C	PET follow myocard perf sing	0.00	0.00	0.00	0.00	0.00	0.00	0.00	0.00	0.00	0.00	XXX
G0039		C	PET follow myocard perf mult	0.00	0.00	0.00	0.00	0.00	0.00	0.00	0.00	0.00	0.00	XXX
G0039	26	A	PET follow myocard perf mult	1.87	0.70	0.70	0.70	0.70	0.07	2.64	2.64	2.64	2.64	XXX
G0039	TC	C	PET follow myocard perf mult	0.00	0.00	0.00	0.00	0.00	0.00	0.00	0.00	0.00	0.00	XXX
G0040		C	PET follow stress echo singl	0.00	0.00	0.00	0.00	0.00	0.00	0.00	0.00	0.00	0.00	XXX
G0040	26	A	PET follow stress echo singl	1.50	0.52	0.52	0.52	0.52	0.04	2.06	2.06	2.06	2.06	XXX
G0040	TC	C	PET follow stress echo singl	0.00	0.00	0.00	0.00	0.00	0.00	0.00	0.00	0.00	0.00	XXX
G0041		C	PET follow stress echo mult	0.00	0.00	0.00	0.00	0.00	0.00	0.00	0.00	0.00	0.00	XXX
G0041	26	A	PET follow stress echo mult	1.87	0.70	0.70	0.70	0.70	0.05	2.62	2.62	2.62	2.62	XXX
G0041	TC	C	PET follow stress echo mult	0.00	0.00	0.00	0.00	0.00	0.00	0.00	0.00	0.00	0.00	XXX
G0042		C	PET follow ventriculogm sing	0.00	0.00	0.00	0.00	0.00	0.00	0.00	0.00	0.00	0.00	XXX
G0042	26	A	PET follow ventriculogm sing	1.50	0.52	0.52	0.52	0.52	0.04	2.06	2.06	2.06	2.06	XXX
G0042	TC	C	PET follow ventriculogm sing	0.00	0.00	0.00	0.00	0.00	0.00	0.00	0.00	0.00	0.00	XXX
G0043		C	PET follow ventriculogm mult	0.00	0.00	0.00	0.00	0.00	0.00	0.00	0.00	0.00	0.00	XXX
G0043	26	A	PET follow ventriculogm mult	1.87	0.70	0.70	0.70	0.70	0.06	2.63	2.63	2.63	2.63	XXX
G0043	TC	C	PET follow ventriculogm mult	0.00	0.00	0.00	0.00	0.00	0.00	0.00	0.00	0.00	0.00	XXX
G0044		C	PET following rest ECG singl	0.00	0.00	0.00	0.00	0.00	0.00	0.00	0.00	0.00	0.00	XXX
G0044	26	A	PET following rest ECG singl	1.50	0.52	0.52	0.52	0.52	0.04	2.06	2.06	2.06	2.06	XXX
G0044	TC	C	PET following rest ECG singl	0.00	0.00	0.00	0.00	0.00	0.00	0.00	0.00	0.00	0.00	XXX
G0045		C	PET following rest ECG mult	0.00	0.00	0.00	0.00	0.00	0.00	0.00	0.00	0.00	0.00	XXX
G0045	26	A	PET following rest ECG mult	1.87	0.70	0.70	0.70	0.70	0.06	2.63	2.63	2.63	2.63	XXX
G0045	TC	C	PET following rest ECG mult	0.00	0.00	0.00	0.00	0.00	0.00	0.00	0.00	0.00	0.00	XXX
G0046		C	PET follow stress ECG singl	0.00	0.00	0.00	0.00	0.00	0.00	0.00	0.00	0.00	0.00	XXX
G0046	26	A	PET follow stress ECG singl	1.50	0.52	0.52	0.52	0.52	0.04	2.06	2.06	2.06	2.06	XXX
G0046	TC	C	PET follow stress ECG singl	0.00	0.00	0.00	0.00	0.00	0.00	0.00	0.00	0.00	0.00	XXX
G0047		C	PET follow stress ECG mult	0.00	0.00	0.00	0.00	0.00	0.00	0.00	0.00	0.00	0.00	XXX
G0047	26	A	PET follow stress ECG mult	1.87	0.70	0.70	0.70	0.70	0.06	2.63	2.63	2.63	2.63	XXX
G0047	TC	C	PET follow stress ECG mult	0.00	0.00	0.00	0.00	0.00	0.00	0.00	0.00	0.00	0.00	XXX
G0050		A	Residual urine by ultrasound	0.00	0.85	0.86	NA	NA	0.04	0.89	0.90	NA	NA	XXX
G0101		A	CA screen;pelvic/breast exam	0.45	0.66	0.57	0.17	0.20	0.01	1.12	1.03	0.63	0.66	XXX
G0102		A	Prostate ca screening; dre	0.17	0.37	0.34	0.06	0.07	0.01	0.55	0.52	0.24	0.25	XXX
G0103		X	Psa, total screening	0.00	0.00	0.00	0.00	0.00	0.00	0.00	0.00	0.00	0.00	XXX
G0104		A	CA screen;flexi sigmoidscope	0.88	1.75	1.65	0.42	0.46	0.05	2.68	2.58	1.35	1.39	000
G0105		A	Colorectal scrn; hi risk ind	3.68	6.60	6.07	1.70	2.38	0.20	10.48	8.95	5.58	6.26	000

[1] CPT codes and descriptions only are copyright 2000 American Medical Association. All Rights Reserved. Applicable FARS/DFARS Apply.
[2] Copyright 1994 American Dental Association. All rights reserved.
[3] + Indicates RVUs are not used for Medicare payment.
[4] PE RVUs = Practice Expense Relative Value Units.

ADDENDUM B.—RELATIVE VALUE UNITS (RVU'S) AND RELATED INFORMATION—Continued

CPT[1]/ HCPCS[2]	MOD	Status	Description	Physician Work RVUs[3]	Fully Implemented Non-Facility PE RVUs	Year 2001 Transitional Non-Facility PE RVUs	Fully Implemented Facility PE RVUs	Year 2001 Transitional Facility PE RVUs	Mal-Practice RVUs	Fully Implemented Non-Facility Total	Year 2001 Transitional Non-Facility Total	Fully Implemented Facility Total	Year 2001 Transitional Facility Total	Global
G0106		A	Colon CA screen;barium enema	0.99	2.57	2.63	2.57	2.63	0.15	3.71	3.77	3.71	3.77	XXX
G0106	26	A	Colon CA screen;barium enema	0.99	0.35	0.39	0.35	0.39	0.04	1.38	1.42	1.38	1.42	XXX
G0106	TC	A	Colon CA screen;barium enema	0.00	2.22	2.24	NA	NA	0.11	2.33	2.35	NA	NA	XXX
G0107		X	CA screen; fecal blood test	0.00	0.00	0.00	0.00	0.00	0.00	0.00	0.00	0.00	0.00	XXX
G0108		A	Diab manage trn per indiv	0.00	1.64	1.64	NA	NA	0.01	1.65	1.65	NA	NA	XXX
G0109		A	Diab manage trn ind/group	0.00	0.96	0.96	NA	NA	0.01	0.97	0.97	NA	NA	XXX
G0110		R	Nett pulm-rehab educ; ind	0.90	0.74	0.63	0.36	0.34	0.03	1.67	1.56	1.29	1.27	XXX
G0111		R	Nett pulm-rehab educ; group	0.27	0.30	0.28	0.11	0.14	0.01	0.58	0.56	0.39	0.42	XXX
G0112		R	Nett;nutrition guid, initial	1.72	1.44	1.34	0.69	0.78	0.05	3.21	3.11	2.46	2.55	XXX
G0113		R	Nett;nutrition guid,subseqnt	1.29	1.11	1.04	0.52	0.60	0.04	2.44	2.37	1.85	1.93	XXX
G0114		R	Nett; psychosocial consult	1.20	0.49	0.46	0.48	0.46	0.03	1.72	1.69	1.71	1.69	XXX
G0115		R	Nett; psychological testing	1.20	0.67	0.60	0.38	0.38	0.04	1.91	1.84	1.62	1.62	XXX
G0116		R	Nett; psychosocial counsel	1.11	1.20	1.00	0.44	0.43	0.04	2.35	2.15	1.59	1.58	XXX
G0120		A	Colon ca scrn; barium enema	0.99	2.57	2.63	2.57	2.63	0.15	3.71	3.77	3.71	3.77	XXX
G0120	26	A	Colon ca scrn; barium enema	0.99	0.35	0.39	0.35	0.39	0.04	1.38	1.42	1.38	1.42	XXX
G0120	TC	A	Colon ca scrn; barium enema	0.00	2.22	2.24	NA	NA	0.11	2.33	2.35	NA	NA	XXX
G0121		N	Colon ca scrn not hi rsk ind	+3.70	6.51	6.00	1.48	2.22	0.14	10.35	9.84	5.32	6.06	XXX
G0122		N	Colon ca scrn; barium enema	+0.99	2.62	2.66	2.62	2.66	0.15	3.76	3.80	3.76	3.80	XXX
G0122	26	N	Colon ca scrn; barium enema	+0.99	0.40	0.42	0.40	0.42	0.04	1.43	1.45	1.43	1.45	XXX
G0122	TC	N	Colon ca scrn; barium enema	+0.00	2.22	2.24	NA	NA	0.11	2.33	2.35	NA	NA	XXX
G0123		X	Screen cerv/vag thin layer	0.00	0.00	0.00	0.00	0.00	0.00	0.00	0.00	0.00	0.00	XXX
G0124		A	Screen c/v thin layer by MD	0.42	0.18	0.22	0.18	0.22	0.01	0.61	0.65	0.61	0.65	XXX
G0125		A	Lung image (PET)	1.50	56.10	56.11	56.10	56.11	2.00	59.60	59.61	59.60	59.61	XXX
G0125	26	A	Lung image (PET)	1.50	0.52	0.52	0.52	0.52	0.05	2.07	2.07	2.07	2.07	XXX
G0125	TC	A	Lung image (PET)	0.00	55.58	55.59	NA	NA	1.95	57.53	57.54	NA	NA	XXX
G0126		A	Lung image (PET) staging	1.87	56.28	56.29	56.28	56.29	2.01	60.16	60.17	60.16	60.17	XXX
G0126	26	A	Lung image (PET) staging	1.87	0.70	0.70	0.70	0.70	0.06	2.63	2.63	2.63	2.63	XXX
G0126	TC	A	Lung image (PET) staging	0.00	55.58	55.59	NA	NA	1.95	57.53	57.54	NA	NA	XXX
G0127		R	Trim nail(s)	0.11	0.49	0.43	0.04	0.06	0.01	0.61	0.55	0.16	0.18	000
G0128		R	CORF skilled nursing service	0.08	0.03	0.03	0.03	0.03	0.01	0.12	0.12	0.12	0.12	XXX
G0130		A	Single energy x-ray study	0.22	0.90	0.90	0.90	0.90	0.05	1.17	1.17	1.17	1.17	XXX
G0130	26	A	Single energy x-ray study	0.22	0.11	0.11	0.11	0.11	0.01	0.34	0.34	0.34	0.34	XXX
G0130	TC	A	Single energy x-ray study	0.00	0.79	0.79	NA	NA	0.04	0.83	0.83	NA	NA	XXX
G0131		A	CT scan, bone density study	0.25	3.18	3.18	3.18	3.18	0.14	3.57	3.57	3.57	3.57	XXX
G0131	26	A	CT scan, bone density study	0.25	0.13	0.13	0.13	0.13	0.01	0.39	0.39	0.39	0.39	XXX
G0131	TC	A	CT scan, bone density study	0.00	3.05	3.05	NA	NA	0.13	3.18	3.18	NA	NA	XXX
G0132		A	CT scan, bone density study	0.22	0.90	0.90	0.90	0.90	0.05	1.17	1.17	1.17	1.17	XXX
G0132	26	A	CT scan, bone density study	0.22	0.11	0.11	0.11	0.11	0.01	0.34	0.34	0.34	0.34	XXX
G0132	TC	A	CT scan, bone density study	0.00	0.79	0.79	NA	NA	0.04	0.83	0.83	NA	NA	XXX
G0141		A	Scr c/v cyto,autosys and md	0.42	0.18	0.22	0.18	0.22	0.01	0.61	0.65	0.61	0.65	XXX
G0143		X	Scr c/v cyto,thinlayer,rescr	0.00	0.00	0.00	0.00	0.00	0.00	0.00	0.00	0.00	0.00	XXX
G0144		X	Scr c/v cyto,thinlayer,rescr	0.00	0.00	0.00	0.00	0.00	0.00	0.00	0.00	0.00	0.00	XXX
G0145		X	Scr c/v cyto,thinlayer,rescr	0.00	0.00	0.00	0.00	0.00	0.00	0.00	0.00	0.00	0.00	XXX
G0147		X	Scr c/v cyto, automated sys	0.00	0.00	0.00	0.00	0.00	0.00	0.00	0.00	0.00	0.00	XXX
G0148		X	Scr c/v cyto, autosys, rescr	0.00	0.00	0.00	0.00	0.00	0.00	0.00	0.00	0.00	0.00	XXX
G0159		D	Perc declot dialysis graft	0.00	0.00	0.00	0.00	0.00	0.00	0.00	0.00	0.00	0.00	XXX
G0160		D	Cryo. ablation, prostate	0.00	0.00	0.00	0.00	0.00	0.00	0.00	0.00	0.00	0.00	090
G0161		D	Echo guide for cryo probes	0.00	0.00	0.00	0.00	0.00	0.00	0.00	0.00	0.00	0.00	XXX
G0161	26	D	Echo guide for cryo probes	0.00	0.00	0.00	0.00	0.00	0.00	0.00	0.00	0.00	0.00	XXX
G0161	TC	D	Echo guide for cryo probes	0.00	0.00	0.00	0.00	0.00	0.00	0.00	0.00	0.00	0.00	XXX
G0163		A	Pet for rec of colorectal ca	1.50	56.15	56.15	56.15	56.15	2.00	59.65	59.65	59.65	59.65	XXX
G0163	26	A	Pet for rec of colorectal ca	1.50	0.57	0.57	0.57	0.57	0.05	2.12	2.12	2.12	2.12	XXX
G0163	TC	A	Pet for rec of colorectal ca	0.00	55.58	55.58	NA	NA	1.95	57.53	57.53	NA	NA	XXX
G0164		A	Pet for lymphoma staging	1.87	56.28	56.28	56.28	56.28	2.01	60.16	60.16	60.16	60.16	XXX
G0164	26	A	Pet for lymphoma staging	1.87	0.70	0.70	0.70	0.70	0.06	2.63	2.63	2.63	2.63	XXX
G0164	TC	A	Pet for lymphoma staging	0.00	55.58	55.58	NA	NA	1.95	57.53	57.53	NA	NA	XXX
G0165		A	Pet,rec of melanoma/met ca	1.50	56.17	56.17	56.17	56.17	2.00	59.67	59.67	59.67	59.67	XXX
G0165	26	A	Pet,rec of melanoma/met ca	1.50	0.59	0.59	0.59	0.59	0.05	2.14	2.14	2.14	2.14	XXX
G0165	TC	A	Pet,rec of melanoma/met ca	0.00	55.58	55.58	NA	NA	1.95	57.53	57.53	NA	NA	XXX
G0166		A	Extrnl counterpulse, per tx	0.07	3.68	3.68	0.03	0.03	0.01	3.76	3.76	0.11	0.11	XXX
G0167		C	Hyperbaric oz tx;no md reqrd	0.00	0.00	0.00	0.00	0.00	0.00	0.00	0.00	0.00	0.00	XXX
G0168		A	Wound closure by adhesive	0.45	1.79	1.79	0.25	0.25	0.01	2.25	2.25	0.71	0.71	000
G0169		D	Removal tissue; no anesthsia	0.00	0.00	0.00	0.00	0.00	0.00	0.00	0.00	0.00	0.00	XXX
G0170		D	Skin biograft	0.00	0.00	0.00	0.00	0.00	0.00	0.00	0.00	0.00	0.00	010
G0171		D	Skin biograft add-on	0.00	0.00	0.00	0.00	0.00	0.00	0.00	0.00	0.00	0.00	ZZZ
G0173		X	Stereo radoisurgery,complete	0.00	0.00	0.00	0.00	0.00	0.00	0.00	0.00	0.00	0.00	XXX
G0174		X	Intensitymodulatedradiation	0.00	0.00	0.00	0.00	0.00	0.00	0.00	0.00	0.00	0.00	XXX
G0175		X	OPPS Service,sched team conf	0.00	0.00	0.00	0.00	0.00	0.00	0.00	0.00	0.00	0.00	XXX
G0176		X	OPPS/PHP;activity therapy	0.00	0.00	0.00	0.00	0.00	0.00	0.00	0.00	0.00	0.00	XXX
G0177		X	OPPS/PHP; train & educ serv	0.00	0.00	0.00	0.00	0.00	0.00	0.00	0.00	0.00	0.00	XXX
G0178		X	Intensitymodulatedradiation	0.00	0.00	0.00	0.00	0.00	0.00	0.00	0.00	0.00	0.00	XXX
G0179		A	Intensitymodulatedradiation	0.45	1.09	1.09	0.18	0.18	0.06	1.60	1.60	0.69	0.69	XXX
G0180		A	MD certification HHA patient	0.67	1.18	1.18	0.27	0.27	0.06	1.91	1.91	1.00	1.00	XXX
G0181		A	Home health care supervision	1.73	1.40	1.40	0.63	0.63	0.06	3.19	3.19	2.42	2.42	XXX
G0182		A	Hospice care supervision	1.73	1.73	1.73	0.60	0.60	0.06	3.52	3.52	2.39	2.39	XXX
G0183		X	Ocular photodynamic therapy	0.00	0.00	0.00	0.00	0.00	0.00	0.00	0.00	0.00	0.00	XXX
G0184		A	Ocular photocoagulation	0.47	0.23	0.23	0.23	0.23	0.50	1.20	1.20	1.20	1.20	ZZZ
G0185		C	Transpuppillary thermotx	0.00	0.00	0.00	0.00	0.00	0.00	0.00	0.00	0.00	0.00	YYY
G0186		C	Dstry eye lesn,fdr vssl tech	0.00	0.00	0.00	0.00	0.00	0.00	0.00	0.00	0.00	0.00	YYY
G0187		C	Dstry mclr drusen,photocoag	0.00	0.00	0.00	0.00	0.00	0.00	0.00	0.00	0.00	0.00	YYY
G0188		C	Xray lwr extrmty-full lngth	0.00	0.00	0.00	0.00	0.00	0.00	0.00	0.00	0.00	0.00	XXX
G0188	26	C	Xray lwr extrmty-full lngth	0.00	0.00	0.00	0.00	0.00	0.00	0.00	0.00	0.00	0.00	XXX
G0188	TC	C	Xray lwr extrmty-full lngth	0.00	0.00	0.00	0.00	0.00	0.00	0.00	0.00	0.00	0.00	XXX

[1] CPT codes and descriptions only are copyright 2000 American Medical Association. All Rights Reserved. Applicable FARS/DFARS Apply.
[2] Copyright 1994 American Dental Association. All rights reserved.
[3] + Indicates RVUs are not used for Medicare payment.
[4] PE RVUs = Practice Expense Relative Value Units.

ADDENDUM B.—RELATIVE VALUE UNITS (RVU'S) AND RELATED INFORMATION—Continued

CPT[1]/ HCPCS[2]	MOD	Status	Description	Physician Work RVUs[3]	Fully Implemented Non-Facility PE RVUs	Year 2001 Transitional Non-Facility PE RVUs	Fully Implemented Facility PE RVUs	Year 2001 Transitional Facility PE RVUs	Mal-Practice RVUs	Fully Implemented Non-Facility Total	Year 2001 Transitional Non-Facility Total	Fully Implemented Facility Total	Year 2001 Transitional Facility Total	Global
G0190		X	MD recertification HHA patient	0.00	0.00	0.00	0.00	0.00	0.00	0.00	0.00	0.00	0.00	XXX
G0191		X	Immunization admin,each add	0.00	0.00	0.00	0.00	0.00	0.00	0.00	0.00	0.00	0.00	XXX
G0192		N	Immunization oral/intranasal	0.00	0.00	0.00	0.00	0.00	0.00	0.00	0.00	0.00	0.00	XXX
G0193		C	Endoscopicstudyswallowfunctn	0.00	0.00	0.00	0.00	0.00	0.00	0.00	0.00	0.00	0.00	XXX
G0194		C	Sensorytestingendoscopicstud	0.00	0.00	0.00	0.00	0.00	0.00	0.00	0.00	0.00	0.00	XXX
G0195		C	Clinicalevalswallowingfunct	0.00	0.00	0.00	0.00	0.00	0.00	0.00	0.00	0.00	0.00	XXX
G0196		C	Evalofswallowingwithradioopa	0.00	0.00	0.00	0.00	0.00	0.00	0.00	0.00	0.00	0.00	XXX
G0197		A	Evalofptforprescipspeechdevi	1.35	1.91	1.91	0.77	0.77	0.04	3.30	3.30	2.16	2.16	XXX
G0198		A	Patientadapation&trainforspe	0.99	1.05	1.05	0.57	0.57	0.03	2.07	2.07	1.59	1.59	XXX
G0199		A	Reevaluationofpatientusespec	1.01	1.72	1.72	0.58	0.58	0.03	2.76	2.76	1.62	1.62	XXX
G0200		A	Evalofpatientprescipofvoicep	1.35	1.91	1.91	0.77	0.77	0.04	3.30	3.30	2.16	2.16	XXX
G0201		A	Modifortraininginusevoicepro	0.99	1.05	1.05	0.57	0.57	0.03	2.07	2.07	1.59	1.59	XXX
G9001		X	MCCD, initial rate	0.00	0.00	0.00	0.00	0.00	0.00	0.00	0.00	0.00	0.00	XXX
G9002		X	MCCD,maintenance rate	0.00	0.00	0.00	0.00	0.00	0.00	0.00	0.00	0.00	0.00	XXX
G9003		X	MCCD, risk adj hi, initial	0.00	0.00	0.00	0.00	0.00	0.00	0.00	0.00	0.00	0.00	XXX
G9004		X	MCCD, risk adj lo, initial	0.00	0.00	0.00	0.00	0.00	0.00	0.00	0.00	0.00	0.00	XXX
G9005		X	MCCD, risk adj, maintenance	0.00	0.00	0.00	0.00	0.00	0.00	0.00	0.00	0.00	0.00	XXX
G9006		X	MCCD, Home monitoring	0.00	0.00	0.00	0.00	0.00	0.00	0.00	0.00	0.00	0.00	XXX
G9007		X	MCCD, sch team conf	0.00	0.00	0.00	0.00	0.00	0.00	0.00	0.00	0.00	0.00	XXX
G9008		X	Mccd,phys coor-care ovrsght	0.00	0.00	0.00	0.00	0.00	0.00	0.00	0.00	0.00	0.00	XXX
G9016		N	Demo-smoking cessation coun	0.00	0.00	0.00	0.00	0.00	0.00	0.00	0.00	0.00	0.00	XXX
H0001		I	Alcohol and/or drug assess	0.00	0.00	0.00	0.00	0.00	0.00	0.00	0.00	0.00	0.00	XXX
H0002		I	Alcohol and/or drug screenin	0.00	0.00	0.00	0.00	0.00	0.00	0.00	0.00	0.00	0.00	XXX
H0003		I	Alcohol and/or drug screenin	0.00	0.00	0.00	0.00	0.00	0.00	0.00	0.00	0.00	0.00	XXX
H0004		I	Alcohol and/or drug services	0.00	0.00	0.00	0.00	0.00	0.00	0.00	0.00	0.00	0.00	XXX
H0005		I	Alcohol and/or drug services	0.00	0.00	0.00	0.00	0.00	0.00	0.00	0.00	0.00	0.00	XXX
H0006		I	Alcohol and/or drug services	0.00	0.00	0.00	0.00	0.00	0.00	0.00	0.00	0.00	0.00	XXX
H0007		I	Alcohol and/or drug services	0.00	0.00	0.00	0.00	0.00	0.00	0.00	0.00	0.00	0.00	XXX
H0008		I	Alcohol and/or drug services	0.00	0.00	0.00	0.00	0.00	0.00	0.00	0.00	0.00	0.00	XXX
H0009		I	Alcohol and/or drug services	0.00	0.00	0.00	0.00	0.00	0.00	0.00	0.00	0.00	0.00	XXX
H0010		I	Alcohol and/or drug services	0.00	0.00	0.00	0.00	0.00	0.00	0.00	0.00	0.00	0.00	XXX
H0011		I	Alcohol and/or drug services	0.00	0.00	0.00	0.00	0.00	0.00	0.00	0.00	0.00	0.00	XXX
H0012		I	Alcohol and/or drug services	0.00	0.00	0.00	0.00	0.00	0.00	0.00	0.00	0.00	0.00	XXX
H0013		I	Alcohol and/or drug services	0.00	0.00	0.00	0.00	0.00	0.00	0.00	0.00	0.00	0.00	XXX
H0014		I	Alcohol and/or drug services	0.00	0.00	0.00	0.00	0.00	0.00	0.00	0.00	0.00	0.00	XXX
H0015		I	Alcohol and/or drug services	0.00	0.00	0.00	0.00	0.00	0.00	0.00	0.00	0.00	0.00	XXX
H0016		I	Alcohol and/or drug services	0.00	0.00	0.00	0.00	0.00	0.00	0.00	0.00	0.00	0.00	XXX
H0017		I	Alcohol and/or drug services	0.00	0.00	0.00	0.00	0.00	0.00	0.00	0.00	0.00	0.00	XXX
H0018		I	Alcohol and/or drug services	0.00	0.00	0.00	0.00	0.00	0.00	0.00	0.00	0.00	0.00	XXX
H0019		I	Alcohol and/or drug services	0.00	0.00	0.00	0.00	0.00	0.00	0.00	0.00	0.00	0.00	XXX
H0020		I	Alcohol and/or drug services	0.00	0.00	0.00	0.00	0.00	0.00	0.00	0.00	0.00	0.00	XXX
H0021		I	Alcohol and/or drug training	0.00	0.00	0.00	0.00	0.00	0.00	0.00	0.00	0.00	0.00	XXX
H0022		I	Alcohol and/or drug interven	0.00	0.00	0.00	0.00	0.00	0.00	0.00	0.00	0.00	0.00	XXX
H0023		I	Alcohol and/or drug outreach	0.00	0.00	0.00	0.00	0.00	0.00	0.00	0.00	0.00	0.00	XXX
H0024		I	Alcohol and/or drug preventi	0.00	0.00	0.00	0.00	0.00	0.00	0.00	0.00	0.00	0.00	XXX
H0025		I	Alcohol and/or drug preventi	0.00	0.00	0.00	0.00	0.00	0.00	0.00	0.00	0.00	0.00	XXX
H0026		I	Alcohol and/or drug preventi	0.00	0.00	0.00	0.00	0.00	0.00	0.00	0.00	0.00	0.00	XXX
H0027		I	Alcohol and/or drug preventi	0.00	0.00	0.00	0.00	0.00	0.00	0.00	0.00	0.00	0.00	XXX
H0028		I	Alcohol and/or drug preventi	0.00	0.00	0.00	0.00	0.00	0.00	0.00	0.00	0.00	0.00	XXX
H0029		I	Alcohol and/or drug preventi	0.00	0.00	0.00	0.00	0.00	0.00	0.00	0.00	0.00	0.00	XXX
H0030		I	Alcohol and/or drug hotline	0.00	0.00	0.00	0.00	0.00	0.00	0.00	0.00	0.00	0.00	XXX
J0120		E	Tetracyclin injection	0.00	0.00	0.00	0.00	0.00	0.00	0.00	0.00	0.00	0.00	XXX
J0130		E	Abciximab injection	0.00	0.00	0.00	0.00	0.00	0.00	0.00	0.00	0.00	0.00	XXX
J0150		E	Injection adenosine 6 MG	0.00	0.00	0.00	0.00	0.00	0.00	0.00	0.00	0.00	0.00	XXX
J0151		E	Adenosine injection	0.00	0.00	0.00	0.00	0.00	0.00	0.00	0.00	0.00	0.00	XXX
J0170		E	Adrenalin epinephrin inject	0.00	0.00	0.00	0.00	0.00	0.00	0.00	0.00	0.00	0.00	XXX
J0190		E	Inj biperiden lactate/5 mg	0.00	0.00	0.00	0.00	0.00	0.00	0.00	0.00	0.00	0.00	XXX
J0200		E	Alatrofloxacin mesylate	0.00	0.00	0.00	0.00	0.00	0.00	0.00	0.00	0.00	0.00	XXX
J0205		E	Alglucerase injection	0.00	0.00	0.00	0.00	0.00	0.00	0.00	0.00	0.00	0.00	XXX
J0207		E	Amifostine	0.00	0.00	0.00	0.00	0.00	0.00	0.00	0.00	0.00	0.00	XXX
J0210		E	Methyldopate hcl injection	0.00	0.00	0.00	0.00	0.00	0.00	0.00	0.00	0.00	0.00	XXX
J0256		E	Alpha 1 proteinase inhibitor	0.00	0.00	0.00	0.00	0.00	0.00	0.00	0.00	0.00	0.00	XXX
J0270		E	Alprostadil for injection	0.00	0.00	0.00	0.00	0.00	0.00	0.00	0.00	0.00	0.00	XXX
J0275		E	Alprostadil urethral suppos	0.00	0.00	0.00	0.00	0.00	0.00	0.00	0.00	0.00	0.00	XXX
J0280		E	Aminophyllin 250 MG inj	0.00	0.00	0.00	0.00	0.00	0.00	0.00	0.00	0.00	0.00	XXX
J0282		E	Amiodarone HCl	0.00	0.00	0.00	0.00	0.00	0.00	0.00	0.00	0.00	0.00	XXX
J0285		E	Amphotericin B	0.00	0.00	0.00	0.00	0.00	0.00	0.00	0.00	0.00	0.00	XXX
J0286		E	Amphotericin B lipid complex	0.00	0.00	0.00	0.00	0.00	0.00	0.00	0.00	0.00	0.00	XXX
J0290		E	Ampicillin 500 MG inj	0.00	0.00	0.00	0.00	0.00	0.00	0.00	0.00	0.00	0.00	XXX
J0295		E	Ampicillin sodium per 1.5 gm	0.00	0.00	0.00	0.00	0.00	0.00	0.00	0.00	0.00	0.00	XXX
J0300		E	Amobarbital 125 MG inj	0.00	0.00	0.00	0.00	0.00	0.00	0.00	0.00	0.00	0.00	XXX
J0330		E	Succinycholine chloride inj	0.00	0.00	0.00	0.00	0.00	0.00	0.00	0.00	0.00	0.00	XXX
J0340		E	Nandrolon phenpropionate inj	0.00	0.00	0.00	0.00	0.00	0.00	0.00	0.00	0.00	0.00	XXX
J0350		E	Injection anistreplase 30 u	0.00	0.00	0.00	0.00	0.00	0.00	0.00	0.00	0.00	0.00	XXX
J0360		E	Hydralazine hcl injection	0.00	0.00	0.00	0.00	0.00	0.00	0.00	0.00	0.00	0.00	XXX
J0380		E	Inj metaraminol bitartrate	0.00	0.00	0.00	0.00	0.00	0.00	0.00	0.00	0.00	0.00	XXX
J0390		E	Chloroquine injection	0.00	0.00	0.00	0.00	0.00	0.00	0.00	0.00	0.00	0.00	XXX
J0395		E	Arbutamine HCl injection	0.00	0.00	0.00	0.00	0.00	0.00	0.00	0.00	0.00	0.00	XXX
J0400		E	Inj trimethaphan camsylate	0.00	0.00	0.00	0.00	0.00	0.00	0.00	0.00	0.00	0.00	XXX
J0456		E	Azithromycin	0.00	0.00	0.00	0.00	0.00	0.00	0.00	0.00	0.00	0.00	XXX
J0460		E	Atropine sulfate injection	0.00	0.00	0.00	0.00	0.00	0.00	0.00	0.00	0.00	0.00	XXX
J0470		E	Dimecaprol injection	0.00	0.00	0.00	0.00	0.00	0.00	0.00	0.00	0.00	0.00	XXX
J0475		E	Baclofen 10 MG injection	0.00	0.00	0.00	0.00	0.00	0.00	0.00	0.00	0.00	0.00	XXX

[1] CPT codes and descriptions only are copyright 2000 American Medical Association. All Rights Reserved. Applicable FARS/DFARS Apply.
[2] Copyright 1994 American Dental Association. All rights reserved.
[3] + Indicates RVUs are not used for Medicare payment.
[4] PE RVUs = Practice Expense Relative Value Units.

ADDENDUM B.—RELATIVE VALUE UNITS (RVU'S) AND RELATED INFORMATION—Continued

CPT[1]/ HCPCS[2]	MOD	Status	Description	Physician Work RVUs[3]	Fully Implemented Non-Facility PE RVUs	Year 2001 Transitional Non-Facility PE RVUs	Fully Implemented Facility PE RVUs	Year 2001 Transitional Facility PE RVUs	Malpractice RVUs	Fully Implemented Non-Facility Total	Year 2001 Transitional Non-Facility Total	Fully Implemented Facility Total	Year 2001 Transitional Facility Total	Global
J0476		E	Baclofen intrathecal trial	0.00	0.00	0.00	0.00	0.00	0.00	0.00	0.00	0.00	0.00	XXX
J0500		E	Dicyclomine injection	0.00	0.00	0.00	0.00	0.00	0.00	0.00	0.00	0.00	0.00	XXX
J0510		E	Benzquinamide injection	0.00	0.00	0.00	0.00	0.00	0.00	0.00	0.00	0.00	0.00	XXX
J0515		E	Inj benztropine mesylate	0.00	0.00	0.00	0.00	0.00	0.00	0.00	0.00	0.00	0.00	XXX
J0520		E	Bethanechol chloride inject	0.00	0.00	0.00	0.00	0.00	0.00	0.00	0.00	0.00	0.00	XXX
J0530		E	Penicillin g benzathine inj	0.00	0.00	0.00	0.00	0.00	0.00	0.00	0.00	0.00	0.00	XXX
J0540		E	Penicillin g benzathine inj	0.00	0.00	0.00	0.00	0.00	0.00	0.00	0.00	0.00	0.00	XXX
J0550		E	Penicillin g benzathine inj	0.00	0.00	0.00	0.00	0.00	0.00	0.00	0.00	0.00	0.00	XXX
J0560		E	Penicillin g benzathine inj	0.00	0.00	0.00	0.00	0.00	0.00	0.00	0.00	0.00	0.00	XXX
J0570		E	Penicillin g benzathine inj	0.00	0.00	0.00	0.00	0.00	0.00	0.00	0.00	0.00	0.00	XXX
J0580		E	Penicillin g benzathine inj	0.00	0.00	0.00	0.00	0.00	0.00	0.00	0.00	0.00	0.00	XXX
J0585		E	Botulinum toxin a per unit	0.00	0.00	0.00	0.00	0.00	0.00	0.00	0.00	0.00	0.00	XXX
J0590		E	Ethylnorepinephrine hcl inj	0.00	0.00	0.00	0.00	0.00	0.00	0.00	0.00	0.00	0.00	XXX
J0600		E	Edetate calcium disodium inj	0.00	0.00	0.00	0.00	0.00	0.00	0.00	0.00	0.00	0.00	XXX
J0610		E	Calcium gluconate injection	0.00	0.00	0.00	0.00	0.00	0.00	0.00	0.00	0.00	0.00	XXX
J0620		E	Calcium glycer & lact/10 ML	0.00	0.00	0.00	0.00	0.00	0.00	0.00	0.00	0.00	0.00	XXX
J0630		E	Calcitonin salmon injection	0.00	0.00	0.00	0.00	0.00	0.00	0.00	0.00	0.00	0.00	XXX
J0635		E	Calcitriol injection	0.00	0.00	0.00	0.00	0.00	0.00	0.00	0.00	0.00	0.00	XXX
J0640		E	Leucovorin calcium injection	0.00	0.00	0.00	0.00	0.00	0.00	0.00	0.00	0.00	0.00	XXX
J0670		E	Inj mepivacaine HCL/10 ml	0.00	0.00	0.00	0.00	0.00	0.00	0.00	0.00	0.00	0.00	XXX
J0690		E	Cefazolin sodium injection	0.00	0.00	0.00	0.00	0.00	0.00	0.00	0.00	0.00	0.00	XXX
J0694		E	Cefoxitin sodium injection	0.00	0.00	0.00	0.00	0.00	0.00	0.00	0.00	0.00	0.00	XXX
J0695		E	Cefonocid sodium injection	0.00	0.00	0.00	0.00	0.00	0.00	0.00	0.00	0.00	0.00	XXX
J0696		E	Ceftriaxone sodium injection	0.00	0.00	0.00	0.00	0.00	0.00	0.00	0.00	0.00	0.00	XXX
J0697		E	Sterile cefuroxime injection	0.00	0.00	0.00	0.00	0.00	0.00	0.00	0.00	0.00	0.00	XXX
J0698		E	Cefotaxime sodium injection	0.00	0.00	0.00	0.00	0.00	0.00	0.00	0.00	0.00	0.00	XXX
J0702		E	Betamethasone acet&sod phosp	0.00	0.00	0.00	0.00	0.00	0.00	0.00	0.00	0.00	0.00	XXX
J0704		E	Betamethasone sod phosp/4 MG	0.00	0.00	0.00	0.00	0.00	0.00	0.00	0.00	0.00	0.00	XXX
J0710		E	Cephapirin sodium injection	0.00	0.00	0.00	0.00	0.00	0.00	0.00	0.00	0.00	0.00	XXX
J0713		E	Inj ceftazidime per 500 mg	0.00	0.00	0.00	0.00	0.00	0.00	0.00	0.00	0.00	0.00	XXX
J0715		E	Ceftizoxime sodium / 500 MG	0.00	0.00	0.00	0.00	0.00	0.00	0.00	0.00	0.00	0.00	XXX
J0720		E	Chloramphenicol sodium injec	0.00	0.00	0.00	0.00	0.00	0.00	0.00	0.00	0.00	0.00	XXX
J0725		E	Chorionic gonadotropin/1000u	0.00	0.00	0.00	0.00	0.00	0.00	0.00	0.00	0.00	0.00	XXX
J0730		E	Chlorpheniramin maleate inj	0.00	0.00	0.00	0.00	0.00	0.00	0.00	0.00	0.00	0.00	XXX
J0735		E	Clonidine hydrochloride	0.00	0.00	0.00	0.00	0.00	0.00	0.00	0.00	0.00	0.00	XXX
J0740		E	Cidofovir injection	0.00	0.00	0.00	0.00	0.00	0.00	0.00	0.00	0.00	0.00	XXX
J0743		E	Cilastatin sodium injection	0.00	0.00	0.00	0.00	0.00	0.00	0.00	0.00	0.00	0.00	XXX
J0745		E	Inj codeine phosphate /30 MG	0.00	0.00	0.00	0.00	0.00	0.00	0.00	0.00	0.00	0.00	XXX
J0760		E	Colchicine injection	0.00	0.00	0.00	0.00	0.00	0.00	0.00	0.00	0.00	0.00	XXX
J0770		E	Colistimethate sodium inj	0.00	0.00	0.00	0.00	0.00	0.00	0.00	0.00	0.00	0.00	XXX
J0780		E	Prochlorperazine injection	0.00	0.00	0.00	0.00	0.00	0.00	0.00	0.00	0.00	0.00	XXX
J0800		E	Corticotropin injection	0.00	0.00	0.00	0.00	0.00	0.00	0.00	0.00	0.00	0.00	XXX
J0810		E	Cortisone injection	0.00	0.00	0.00	0.00	0.00	0.00	0.00	0.00	0.00	0.00	XXX
J0835		E	Inj cosyntropin per 0.25 MG	0.00	0.00	0.00	0.00	0.00	0.00	0.00	0.00	0.00	0.00	XXX
J0850		E	Cytomegalovirus imm IV /vial	0.00	0.00	0.00	0.00	0.00	0.00	0.00	0.00	0.00	0.00	XXX
J0895		E	Deferoxamine mesylate inj	0.00	0.00	0.00	0.00	0.00	0.00	0.00	0.00	0.00	0.00	XXX
J0900		E	Testosterone enanthate inj	0.00	0.00	0.00	0.00	0.00	0.00	0.00	0.00	0.00	0.00	XXX
J0945		E	Brompheniramine maleate inj	0.00	0.00	0.00	0.00	0.00	0.00	0.00	0.00	0.00	0.00	XXX
J0970		E	Estradiol valerate injection	0.00	0.00	0.00	0.00	0.00	0.00	0.00	0.00	0.00	0.00	XXX
J1000		E	Depo-estradiol cypionate inj	0.00	0.00	0.00	0.00	0.00	0.00	0.00	0.00	0.00	0.00	XXX
J1020		E	Methylprednisolone 20 MG inj	0.00	0.00	0.00	0.00	0.00	0.00	0.00	0.00	0.00	0.00	XXX
J1030		E	Methylprednisolone 40 MG inj	0.00	0.00	0.00	0.00	0.00	0.00	0.00	0.00	0.00	0.00	XXX
J1040		E	Methylprednisolone 80 MG inj	0.00	0.00	0.00	0.00	0.00	0.00	0.00	0.00	0.00	0.00	XXX
J1050		E	Medroxyprogesterone inj	0.00	0.00	0.00	0.00	0.00	0.00	0.00	0.00	0.00	0.00	XXX
J1055		N	Medrxyprogester acetate inj	0.00	0.00	0.00	0.00	0.00	0.00	0.00	0.00	0.00	0.00	XXX
J1060		E	Testosterone cypionate 1 ML	0.00	0.00	0.00	0.00	0.00	0.00	0.00	0.00	0.00	0.00	XXX
J1070		E	Testosterone cypionat 100 MG	0.00	0.00	0.00	0.00	0.00	0.00	0.00	0.00	0.00	0.00	XXX
J1080		E	Testosterone cypionat 200 MG	0.00	0.00	0.00	0.00	0.00	0.00	0.00	0.00	0.00	0.00	XXX
J1090		E	Testosterone cypionate 50 MG	0.00	0.00	0.00	0.00	0.00	0.00	0.00	0.00	0.00	0.00	XXX
J1095		E	Inj dexamethasone acetate	0.00	0.00	0.00	0.00	0.00	0.00	0.00	0.00	0.00	0.00	XXX
J1100		E	Dexamethasone sodium phos	0.00	0.00	0.00	0.00	0.00	0.00	0.00	0.00	0.00	0.00	XXX
J1110		E	Inj dihydroergotamine mesylt	0.00	0.00	0.00	0.00	0.00	0.00	0.00	0.00	0.00	0.00	XXX
J1120		E	Acetazolamid sodium injectio	0.00	0.00	0.00	0.00	0.00	0.00	0.00	0.00	0.00	0.00	XXX
J1160		E	Digoxin injection	0.00	0.00	0.00	0.00	0.00	0.00	0.00	0.00	0.00	0.00	XXX
J1165		E	Phenytoin sodium injection	0.00	0.00	0.00	0.00	0.00	0.00	0.00	0.00	0.00	0.00	XXX
J1170		E	Hydromorphone injection	0.00	0.00	0.00	0.00	0.00	0.00	0.00	0.00	0.00	0.00	XXX
J1180		E	Dyphylline injection	0.00	0.00	0.00	0.00	0.00	0.00	0.00	0.00	0.00	0.00	XXX
J1190		E	Dexrazoxane HCl injection	0.00	0.00	0.00	0.00	0.00	0.00	0.00	0.00	0.00	0.00	XXX
J1200		E	Diphenhydramine hcl injectio	0.00	0.00	0.00	0.00	0.00	0.00	0.00	0.00	0.00	0.00	XXX
J1205		E	Chlorothiazide sodium inj	0.00	0.00	0.00	0.00	0.00	0.00	0.00	0.00	0.00	0.00	XXX
J1212		E	Dimethyl sulfoxide 50% 50 ML	0.00	0.00	0.00	0.00	0.00	0.00	0.00	0.00	0.00	0.00	XXX
J1230		E	Methadone injection	0.00	0.00	0.00	0.00	0.00	0.00	0.00	0.00	0.00	0.00	XXX
J1240		E	Dimenhydrinate injection	0.00	0.00	0.00	0.00	0.00	0.00	0.00	0.00	0.00	0.00	XXX
J1245		E	Dipyridamole injection	0.00	0.00	0.00	0.00	0.00	0.00	0.00	0.00	0.00	0.00	XXX
J1250		E	Inj dobutamine HCL/250 mg	0.00	0.00	0.00	0.00	0.00	0.00	0.00	0.00	0.00	0.00	XXX
J1260		E	Dolasetron mesylate	0.00	0.00	0.00	0.00	0.00	0.00	0.00	0.00	0.00	0.00	XXX
J1320		E	Amitriptyline injection	0.00	0.00	0.00	0.00	0.00	0.00	0.00	0.00	0.00	0.00	XXX
J1325		E	Epoprostenol injection	0.00	0.00	0.00	0.00	0.00	0.00	0.00	0.00	0.00	0.00	XXX
J1327		E	Eptifibatide injection	0.00	0.00	0.00	0.00	0.00	0.00	0.00	0.00	0.00	0.00	XXX
J1330		E	Ergonovine maleate injection	0.00	0.00	0.00	0.00	0.00	0.00	0.00	0.00	0.00	0.00	XXX
J1362		E	Erythromycin glucep / 250 MG	0.00	0.00	0.00	0.00	0.00	0.00	0.00	0.00	0.00	0.00	XXX
J1364		E	Erythro lactobionate /500 MG	0.00	0.00	0.00	0.00	0.00	0.00	0.00	0.00	0.00	0.00	XXX
J1380		E	Estradiol valerate 10 MG inj	0.00	0.00	0.00	0.00	0.00	0.00	0.00	0.00	0.00	0.00	XXX

[1] CPT codes and descriptions only are copyright 2000 American Medical Association. All Rights Reserved. Applicable FARS/DFARS Apply.
[2] Copyright 1994 American Dental Association. All rights reserved.
[3] + Indicates RVUs are not used for Medicare payment.
[4] PE RVUs = Practice Expense Relative Value Units.

ADDENDUM B.—RELATIVE VALUE UNITS (RVU'S) AND RELATED INFORMATION—Continued

CPT[1]/ HCPCS[2]	MOD	Status	Description	Physician Work RVUs[3]	Fully Implemented Non-Facility PE RVUs	Year 2001 Transitional Non-Facility PE RVUs	Fully Implemented Facility PE RVUs	Year 2001 Transitional Facility PE RVUs	Mal-Practice RVUs	Fully Implemented Non-Facility Total	Year 2001 Transitional Non-Facility Total	Fully Implemented Facility Total	Year 2001 Transitional Facility Total	Global
J1390		E	Estradiol valerate 20 MG inj	0.00	0.00	0.00	0.00	0.00	0.00	0.00	0.00	0.00	0.00	XXX
J1410		E	Inj estrogen conjugate 25 MG	0.00	0.00	0.00	0.00	0.00	0.00	0.00	0.00	0.00	0.00	XXX
J1435		E	Injection estrone per 1 MG	0.00	0.00	0.00	0.00	0.00	0.00	0.00	0.00	0.00	0.00	XXX
J1436		E	Etidronate disodium inj	0.00	0.00	0.00	0.00	0.00	0.00	0.00	0.00	0.00	0.00	XXX
J1438		E	Etanercept injection	0.00	0.00	0.00	0.00	0.00	0.00	0.00	0.00	0.00	0.00	XXX
J1440		E	Filgrastim 300 mcg injeciton	0.00	0.00	0.00	0.00	0.00	0.00	0.00	0.00	0.00	0.00	XXX
J1441		E	Filgrastim 480 mcg injection	0.00	0.00	0.00	0.00	0.00	0.00	0.00	0.00	0.00	0.00	XXX
J1450		E	Fluconazole	0.00	0.00	0.00	0.00	0.00	0.00	0.00	0.00	0.00	0.00	XXX
J1452		E	Intraocular Fomivirsen na	0.00	0.00	0.00	0.00	0.00	0.00	0.00	0.00	0.00	0.00	XXX
J1455		E	Foscarnet sodium injection	0.00	0.00	0.00	0.00	0.00	0.00	0.00	0.00	0.00	0.00	XXX
J1460		E	Gamma globulin 1 CC inj	0.00	0.00	0.00	0.00	0.00	0.00	0.00	0.00	0.00	0.00	XXX
J1470		E	Gamma globulin 2 CC inj	0.00	0.00	0.00	0.00	0.00	0.00	0.00	0.00	0.00	0.00	XXX
J1480		E	Gamma globulin 3 CC inj	0.00	0.00	0.00	0.00	0.00	0.00	0.00	0.00	0.00	0.00	XXX
J1490		E	Gamma globulin 4 CC inj	0.00	0.00	0.00	0.00	0.00	0.00	0.00	0.00	0.00	0.00	XXX
J1500		E	Gamma globulin 5 CC inj	0.00	0.00	0.00	0.00	0.00	0.00	0.00	0.00	0.00	0.00	XXX
J1510		E	Gamma globulin 6 CC inj	0.00	0.00	0.00	0.00	0.00	0.00	0.00	0.00	0.00	0.00	XXX
J1520		E	Gamma globulin 7 CC inj	0.00	0.00	0.00	0.00	0.00	0.00	0.00	0.00	0.00	0.00	XXX
J1530		E	Gamma globulin 8 CC inj	0.00	0.00	0.00	0.00	0.00	0.00	0.00	0.00	0.00	0.00	XXX
J1540		E	Gamma globulin 9 CC inj	0.00	0.00	0.00	0.00	0.00	0.00	0.00	0.00	0.00	0.00	XXX
J1550		E	Gamma globulin 10 CC inj	0.00	0.00	0.00	0.00	0.00	0.00	0.00	0.00	0.00	0.00	XXX
J1560		E	Gamma globulin > 10 CC inj	0.00	0.00	0.00	0.00	0.00	0.00	0.00	0.00	0.00	0.00	XXX
J1561		E	Immune globulin 500 mg	0.00	0.00	0.00	0.00	0.00	0.00	0.00	0.00	0.00	0.00	XXX
J1562		D	Immune globulin 5 gms	0.00	0.00	0.00	0.00	0.00	0.00	0.00	0.00	0.00	0.00	XXX
J1563		E	IV immune globulin	0.00	0.00	0.00	0.00	0.00	0.00	0.00	0.00	0.00	0.00	XXX
J1565		E	RSV-ivig	0.00	0.00	0.00	0.00	0.00	0.00	0.00	0.00	0.00	0.00	XXX
J1570		E	Ganciclovir sodium injection	0.00	0.00	0.00	0.00	0.00	0.00	0.00	0.00	0.00	0.00	XXX
J1580		E	Garamycin gentamicin inj	0.00	0.00	0.00	0.00	0.00	0.00	0.00	0.00	0.00	0.00	XXX
J1600		E	Gold sodium thiomaleate inj	0.00	0.00	0.00	0.00	0.00	0.00	0.00	0.00	0.00	0.00	XXX
J1610		E	Glucagon hydrochloride/1 MG	0.00	0.00	0.00	0.00	0.00	0.00	0.00	0.00	0.00	0.00	XXX
J1620		E	Gonadorelin hydroch/ 100 mcg	0.00	0.00	0.00	0.00	0.00	0.00	0.00	0.00	0.00	0.00	XXX
J1626		E	Granisetron HCl injection	0.00	0.00	0.00	0.00	0.00	0.00	0.00	0.00	0.00	0.00	XXX
J1630		E	Haloperidol injection	0.00	0.00	0.00	0.00	0.00	0.00	0.00	0.00	0.00	0.00	XXX
J1631		E	Haloperidol decanoate inj	0.00	0.00	0.00	0.00	0.00	0.00	0.00	0.00	0.00	0.00	XXX
J1642		E	Inj heparin sodium per 10 u	0.00	0.00	0.00	0.00	0.00	0.00	0.00	0.00	0.00	0.00	XXX
J1644		E	Inj heparin sodium per 1000u	0.00	0.00	0.00	0.00	0.00	0.00	0.00	0.00	0.00	0.00	XXX
J1645		E	Dalteparin sodium	0.00	0.00	0.00	0.00	0.00	0.00	0.00	0.00	0.00	0.00	XXX
J1650		E	Inj enoxaparin sodium	0.00	0.00	0.00	0.00	0.00	0.00	0.00	0.00	0.00	0.00	XXX
J1670		E	Tetanus immune globulin inj	0.00	0.00	0.00	0.00	0.00	0.00	0.00	0.00	0.00	0.00	XXX
J1690		E	Prednisolone tebutate inj	0.00	0.00	0.00	0.00	0.00	0.00	0.00	0.00	0.00	0.00	XXX
J1700		E	Hydrocortisone acetate inj	0.00	0.00	0.00	0.00	0.00	0.00	0.00	0.00	0.00	0.00	XXX
J1710		E	Hydrocortisone sodium ph inj	0.00	0.00	0.00	0.00	0.00	0.00	0.00	0.00	0.00	0.00	XXX
J1720		E	Hydrocortisone sodium succ i	0.00	0.00	0.00	0.00	0.00	0.00	0.00	0.00	0.00	0.00	XXX
J1730		E	Diazoxide injection	0.00	0.00	0.00	0.00	0.00	0.00	0.00	0.00	0.00	0.00	XXX
J1739		E	Hydroxyprogesterone cap 125	0.00	0.00	0.00	0.00	0.00	0.00	0.00	0.00	0.00	0.00	XXX
J1741		E	Hydroxyprogesterone cap 250	0.00	0.00	0.00	0.00	0.00	0.00	0.00	0.00	0.00	0.00	XXX
J1742		E	Ibutilide fumarate injection	0.00	0.00	0.00	0.00	0.00	0.00	0.00	0.00	0.00	0.00	XXX
J1745		E	Infliximab injection	0.00	0.00	0.00	0.00	0.00	0.00	0.00	0.00	0.00	0.00	XXX
J1750		E	Iron dextran	0.00	0.00	0.00	0.00	0.00	0.00	0.00	0.00	0.00	0.00	XXX
J1785		E	Injection imiglucerase /unit	0.00	0.00	0.00	0.00	0.00	0.00	0.00	0.00	0.00	0.00	XXX
J1790		E	Droperidol injection	0.00	0.00	0.00	0.00	0.00	0.00	0.00	0.00	0.00	0.00	XXX
J1800		E	Propranolol injection	0.00	0.00	0.00	0.00	0.00	0.00	0.00	0.00	0.00	0.00	XXX
J1810		E	Droperidol/fentanyl inj	0.00	0.00	0.00	0.00	0.00	0.00	0.00	0.00	0.00	0.00	XXX
J1820		E	Insulin injection	0.00	0.00	0.00	0.00	0.00	0.00	0.00	0.00	0.00	0.00	XXX
J1825		E	Interferon beta-1a	0.00	0.00	0.00	0.00	0.00	0.00	0.00	0.00	0.00	0.00	XXX
J1830		E	Interferon beta-1b / .25 MG	0.00	0.00	0.00	0.00	0.00	0.00	0.00	0.00	0.00	0.00	XXX
J1840		E	Kanamycin sulfate 500 MG inj	0.00	0.00	0.00	0.00	0.00	0.00	0.00	0.00	0.00	0.00	XXX
J1850		E	Kanamycin sulfate 75 MG inj	0.00	0.00	0.00	0.00	0.00	0.00	0.00	0.00	0.00	0.00	XXX
J1885		E	Ketorolac tromethamine inj	0.00	0.00	0.00	0.00	0.00	0.00	0.00	0.00	0.00	0.00	XXX
J1890		E	Cephalothin sodium injection	0.00	0.00	0.00	0.00	0.00	0.00	0.00	0.00	0.00	0.00	XXX
J1910		E	Kutapressin injection	0.00	0.00	0.00	0.00	0.00	0.00	0.00	0.00	0.00	0.00	XXX
J1930		E	Propiomazine injection	0.00	0.00	0.00	0.00	0.00	0.00	0.00	0.00	0.00	0.00	XXX
J1940		E	Furosemide injection	0.00	0.00	0.00	0.00	0.00	0.00	0.00	0.00	0.00	0.00	XXX
J1950		E	Leuprolide acetate /3.75 MG	0.00	0.00	0.00	0.00	0.00	0.00	0.00	0.00	0.00	0.00	XXX
J1955		E	Inj levocarnitine per 1 gm	0.00	0.00	0.00	0.00	0.00	0.00	0.00	0.00	0.00	0.00	XXX
J1956		E	Levofloxacin injection	0.00	0.00	0.00	0.00	0.00	0.00	0.00	0.00	0.00	0.00	XXX
J1960		E	Levorphanol tartrate inj	0.00	0.00	0.00	0.00	0.00	0.00	0.00	0.00	0.00	0.00	XXX
J1970		E	Methotrimeprazine injection	0.00	0.00	0.00	0.00	0.00	0.00	0.00	0.00	0.00	0.00	XXX
J1980		E	Hyoscyamine sulfate inj	0.00	0.00	0.00	0.00	0.00	0.00	0.00	0.00	0.00	0.00	XXX
J1990		E	Chlordiazepoxide injection	0.00	0.00	0.00	0.00	0.00	0.00	0.00	0.00	0.00	0.00	XXX
J2000		E	Lidocaine injection	0.00	0.00	0.00	0.00	0.00	0.00	0.00	0.00	0.00	0.00	XXX
J2010		E	Lincomycin injection	0.00	0.00	0.00	0.00	0.00	0.00	0.00	0.00	0.00	0.00	XXX
J2060		E	Lorazepam injection	0.00	0.00	0.00	0.00	0.00	0.00	0.00	0.00	0.00	0.00	XXX
J2150		E	Mannitol injection	0.00	0.00	0.00	0.00	0.00	0.00	0.00	0.00	0.00	0.00	XXX
J2175		E	Meperidine hydrochl /100 MG	0.00	0.00	0.00	0.00	0.00	0.00	0.00	0.00	0.00	0.00	XXX
J2180		E	Meperidine/promethazine inj	0.00	0.00	0.00	0.00	0.00	0.00	0.00	0.00	0.00	0.00	XXX
J2210		E	Methylergonovin maleate inj	0.00	0.00	0.00	0.00	0.00	0.00	0.00	0.00	0.00	0.00	XXX
J2240		E	Metocurine iodide injection	0.00	0.00	0.00	0.00	0.00	0.00	0.00	0.00	0.00	0.00	XXX
J2250		E	Inj midazolam hydrochloride	0.00	0.00	0.00	0.00	0.00	0.00	0.00	0.00	0.00	0.00	XXX
J2260		E	Inj milrinone lactate / 5 ML	0.00	0.00	0.00	0.00	0.00	0.00	0.00	0.00	0.00	0.00	XXX
J2270		E	Morphine sulfate injection	0.00	0.00	0.00	0.00	0.00	0.00	0.00	0.00	0.00	0.00	XXX
J2271		E	Morphine so4 injection 100mg	0.00	0.00	0.00	0.00	0.00	0.00	0.00	0.00	0.00	0.00	XXX
J2275		E	Morphine sulfate injection	0.00	0.00	0.00	0.00	0.00	0.00	0.00	0.00	0.00	0.00	XXX
J2300		E	Inj nalbuphine hydrochloride	0.00	0.00	0.00	0.00	0.00	0.00	0.00	0.00	0.00	0.00	XXX

[1] CPT codes and descriptions only are copyright 2000 American Medical Association. All Rights Reserved. Applicable FARS/DFARS Apply.
[2] Copyright 1994 American Dental Association. All rights reserved.
[3] + Indicates RVUs are not used for Medicare payment.
[4] PE RVUs = Practice Expense Relative Value Units.

ADDENDUM B.—RELATIVE VALUE UNITS (RVU'S) AND RELATED INFORMATION—Continued

CPT[1]/ HCPCS[2]	MOD	Status	Description	Physician Work RVUs[3]	Fully Implemented Non-Facility PE RVUs	Year 2001 Transitional Non-Facility PE RVUs	Fully Implemented Facility PE RVUs	Year 2001 Transitional Facility PE RVUs	Mal-Practice RVUs	Fully Implemented Non-Facility Total	Year 2001 Transitional Non-Facility Total	Fully Implemented Facility Total	Year 2001 Transitional Facility Total	Global
J2310		E	Inj naloxone hydrochloride	0.00	0.00	0.00	0.00	0.00	0.00	0.00	0.00	0.00	0.00	XXX
J2320		E	Nandrolone decanoate 50 MG	0.00	0.00	0.00	0.00	0.00	0.00	0.00	0.00	0.00	0.00	XXX
J2321		E	Nandrolone decanoate 100 MG	0.00	0.00	0.00	0.00	0.00	0.00	0.00	0.00	0.00	0.00	XXX
J2322		E	Nandrolone decanoate 200 MG	0.00	0.00	0.00	0.00	0.00	0.00	0.00	0.00	0.00	0.00	XXX
J2330		E	Thiothixene injection	0.00	0.00	0.00	0.00	0.00	0.00	0.00	0.00	0.00	0.00	XXX
J2350		E	Niacinamide/niacin injection	0.00	0.00	0.00	0.00	0.00	0.00	0.00	0.00	0.00	0.00	XXX
J2352		E	Octreotide acetate injection	0.00	0.00	0.00	0.00	0.00	0.00	0.00	0.00	0.00	0.00	XXX
J2355		E	Oprelvekin injection	0.00	0.00	0.00	0.00	0.00	0.00	0.00	0.00	0.00	0.00	XXX
J2360		E	Orphenadrine injection	0.00	0.00	0.00	0.00	0.00	0.00	0.00	0.00	0.00	0.00	XXX
J2370		E	Phenylephrine hcl injection	0.00	0.00	0.00	0.00	0.00	0.00	0.00	0.00	0.00	0.00	XXX
J2400		E	Chloroprocaine hcl injection	0.00	0.00	0.00	0.00	0.00	0.00	0.00	0.00	0.00	0.00	XXX
J2405		E	Ondansetron hcl injection	0.00	0.00	0.00	0.00	0.00	0.00	0.00	0.00	0.00	0.00	XXX
J2410		E	Oxymorphone hcl injection	0.00	0.00	0.00	0.00	0.00	0.00	0.00	0.00	0.00	0.00	XXX
J2430		E	Pamidronate disodium /30 MG	0.00	0.00	0.00	0.00	0.00	0.00	0.00	0.00	0.00	0.00	XXX
J2440		E	Papaverin hcl injection	0.00	0.00	0.00	0.00	0.00	0.00	0.00	0.00	0.00	0.00	XXX
J2460		E	Oxytetracycline injection	0.00	0.00	0.00	0.00	0.00	0.00	0.00	0.00	0.00	0.00	XXX
J2480		E	Hydrochlorides of opium inj	0.00	0.00	0.00	0.00	0.00	0.00	0.00	0.00	0.00	0.00	XXX
J2500		E	Paricalcitol	0.00	0.00	0.00	0.00	0.00	0.00	0.00	0.00	0.00	0.00	XXX
J2510		E	Penicillin g procaine inj	0.00	0.00	0.00	0.00	0.00	0.00	0.00	0.00	0.00	0.00	XXX
J2512		E	Inj pentagastrin per 2 ML	0.00	0.00	0.00	0.00	0.00	0.00	0.00	0.00	0.00	0.00	XXX
J2515		E	Pentobarbital sodium inj	0.00	0.00	0.00	0.00	0.00	0.00	0.00	0.00	0.00	0.00	XXX
J2540		E	Penicillin g potassium inj	0.00	0.00	0.00	0.00	0.00	0.00	0.00	0.00	0.00	0.00	XXX
J2543		E	Piperacillin/tazobactam	0.00	0.00	0.00	0.00	0.00	0.00	0.00	0.00	0.00	0.00	XXX
J2545		E	Pentamidine isethionte/300mg	0.00	0.00	0.00	0.00	0.00	0.00	0.00	0.00	0.00	0.00	XXX
J2550		E	Promethazine hcl injection	0.00	0.00	0.00	0.00	0.00	0.00	0.00	0.00	0.00	0.00	XXX
J2560		E	Phenobarbital sodium inj	0.00	0.00	0.00	0.00	0.00	0.00	0.00	0.00	0.00	0.00	XXX
J2590		E	Oxytocin injection	0.00	0.00	0.00	0.00	0.00	0.00	0.00	0.00	0.00	0.00	XXX
J2597		E	Inj desmopressin acetate	0.00	0.00	0.00	0.00	0.00	0.00	0.00	0.00	0.00	0.00	XXX
J2640		E	Prednisolone sodium ph inj	0.00	0.00	0.00	0.00	0.00	0.00	0.00	0.00	0.00	0.00	XXX
J2650		E	Prednisolone acetate inj	0.00	0.00	0.00	0.00	0.00	0.00	0.00	0.00	0.00	0.00	XXX
J2670		E	Totazoline hcl injection	0.00	0.00	0.00	0.00	0.00	0.00	0.00	0.00	0.00	0.00	XXX
J2675		E	Inj progesterone per 50 MG	0.00	0.00	0.00	0.00	0.00	0.00	0.00	0.00	0.00	0.00	XXX
J2680		E	Fluphenazine decanoate 25 MG	0.00	0.00	0.00	0.00	0.00	0.00	0.00	0.00	0.00	0.00	XXX
J2690		E	Procainamide hcl injection	0.00	0.00	0.00	0.00	0.00	0.00	0.00	0.00	0.00	0.00	XXX
J2700		E	Oxacillin sodium injeciton	0.00	0.00	0.00	0.00	0.00	0.00	0.00	0.00	0.00	0.00	XXX
J2710		E	Neostigmine methylslfte inj	0.00	0.00	0.00	0.00	0.00	0.00	0.00	0.00	0.00	0.00	XXX
J2720		E	Inj protamine sulfate/10 MG	0.00	0.00	0.00	0.00	0.00	0.00	0.00	0.00	0.00	0.00	XXX
J2725		E	Inj protirelin per 250 mcg	0.00	0.00	0.00	0.00	0.00	0.00	0.00	0.00	0.00	0.00	XXX
J2730		E	Pralidoxime chloride inj	0.00	0.00	0.00	0.00	0.00	0.00	0.00	0.00	0.00	0.00	XXX
J2760		E	Phentolaine mesylate inj	0.00	0.00	0.00	0.00	0.00	0.00	0.00	0.00	0.00	0.00	XXX
J2765		E	Metoclopramide hcl injection	0.00	0.00	0.00	0.00	0.00	0.00	0.00	0.00	0.00	0.00	XXX
J2770		E	Quinupristin/dalfopristin	0.00	0.00	0.00	0.00	0.00	0.00	0.00	0.00	0.00	0.00	XXX
J2780		E	Ranitidine hydrochloride inj	0.00	0.00	0.00	0.00	0.00	0.00	0.00	0.00	0.00	0.00	XXX
J2790		E	Rho d immune globulin inj	0.00	0.00	0.00	0.00	0.00	0.00	0.00	0.00	0.00	0.00	XXX
J2792		E	Rho(D) immune globulin h, sd	0.00	0.00	0.00	0.00	0.00	0.00	0.00	0.00	0.00	0.00	XXX
J2795		E	Ropivacaine HCl injection	0.00	0.00	0.00	0.00	0.00	0.00	0.00	0.00	0.00	0.00	XXX
J2800		E	Methocarbamol injection	0.00	0.00	0.00	0.00	0.00	0.00	0.00	0.00	0.00	0.00	XXX
J2810		E	Inj theophylline per 40 MG	0.00	0.00	0.00	0.00	0.00	0.00	0.00	0.00	0.00	0.00	XXX
J2820		E	Sargramostim injection	0.00	0.00	0.00	0.00	0.00	0.00	0.00	0.00	0.00	0.00	XXX
J2860		E	Secobarbital sodium inj	0.00	0.00	0.00	0.00	0.00	0.00	0.00	0.00	0.00	0.00	XXX
J2910		E	Aurothioglucose injeciton	0.00	0.00	0.00	0.00	0.00	0.00	0.00	0.00	0.00	0.00	XXX
J2912		E	Sodium chloride injection	0.00	0.00	0.00	0.00	0.00	0.00	0.00	0.00	0.00	0.00	XXX
J2915		E	NA Ferric Gluconate Complex	0.00	0.00	0.00	0.00	0.00	0.00	0.00	0.00	0.00	0.00	XXX
J2920		E	Methylprednisolone injection	0.00	0.00	0.00	0.00	0.00	0.00	0.00	0.00	0.00	0.00	XXX
J2930		E	Methylprednisolone injection	0.00	0.00	0.00	0.00	0.00	0.00	0.00	0.00	0.00	0.00	XXX
J2950		E	Promazine hcl injeciton	0.00	0.00	0.00	0.00	0.00	0.00	0.00	0.00	0.00	0.00	XXX
J2970		E	Methicillin sodium injection	0.00	0.00	0.00	0.00	0.00	0.00	0.00	0.00	0.00	0.00	XXX
J2993		E	Reteplase injection	0.00	0.00	0.00	0.00	0.00	0.00	0.00	0.00	0.00	0.00	XXX
J2994		D	Reteplase double bolus	0.00	0.00	0.00	0.00	0.00	0.00	0.00	0.00	0.00	0.00	XXX
J2995		E	Inj streptokinase /250000 IU	0.00	0.00	0.00	0.00	0.00	0.00	0.00	0.00	0.00	0.00	XXX
J2996		D	Alteplase recombinant inj	0.00	0.00	0.00	0.00	0.00	0.00	0.00	0.00	0.00	0.00	XXX
J2997		E	Alteplase recombinant	0.00	0.00	0.00	0.00	0.00	0.00	0.00	0.00	0.00	0.00	XXX
J3000		E	Streptomycin injection	0.00	0.00	0.00	0.00	0.00	0.00	0.00	0.00	0.00	0.00	XXX
J3010		E	Fentanyl citrate injeciton	0.00	0.00	0.00	0.00	0.00	0.00	0.00	0.00	0.00	0.00	XXX
J3030		E	Sumatriptan succinate / 6 MG	0.00	0.00	0.00	0.00	0.00	0.00	0.00	0.00	0.00	0.00	XXX
J3070		E	Pentazocine hcl injeciton	0.00	0.00	0.00	0.00	0.00	0.00	0.00	0.00	0.00	0.00	XXX
J3080		E	Chlorprothixene injection	0.00	0.00	0.00	0.00	0.00	0.00	0.00	0.00	0.00	0.00	XXX
J3105		E	Terbutaline sulfate inj	0.00	0.00	0.00	0.00	0.00	0.00	0.00	0.00	0.00	0.00	XXX
J3120		E	Testosterone enanthate inj	0.00	0.00	0.00	0.00	0.00	0.00	0.00	0.00	0.00	0.00	XXX
J3130		E	Testosterone enanthate inj	0.00	0.00	0.00	0.00	0.00	0.00	0.00	0.00	0.00	0.00	XXX
J3140		E	Testosterone suspension inj	0.00	0.00	0.00	0.00	0.00	0.00	0.00	0.00	0.00	0.00	XXX
J3150		E	Testosteron propionate inj	0.00	0.00	0.00	0.00	0.00	0.00	0.00	0.00	0.00	0.00	XXX
J3230		E	Chlorpromazine hcl injection	0.00	0.00	0.00	0.00	0.00	0.00	0.00	0.00	0.00	0.00	XXX
J3240		E	Thyrotropin injection	0.00	0.00	0.00	0.00	0.00	0.00	0.00	0.00	0.00	0.00	XXX
J3245		E	Tirofiban hydrochloride	0.00	0.00	0.00	0.00	0.00	0.00	0.00	0.00	0.00	0.00	XXX
J3250		E	Trimethobenzamide hcl inj	0.00	0.00	0.00	0.00	0.00	0.00	0.00	0.00	0.00	0.00	XXX
J3260		E	Tobramycin sulfate injection	0.00	0.00	0.00	0.00	0.00	0.00	0.00	0.00	0.00	0.00	XXX
J3265		E	Injection torsemide 10 mg/ml	0.00	0.00	0.00	0.00	0.00	0.00	0.00	0.00	0.00	0.00	XXX
J3270		E	Imipramine hcl injection	0.00	0.00	0.00	0.00	0.00	0.00	0.00	0.00	0.00	0.00	XXX
J3280		E	Thiethylperazine maleate inj	0.00	0.00	0.00	0.00	0.00	0.00	0.00	0.00	0.00	0.00	XXX
J3301		E	Triamcinolone acetonide inj	0.00	0.00	0.00	0.00	0.00	0.00	0.00	0.00	0.00	0.00	XXX
J3302		E	Triamcinolone diacetate inj	0.00	0.00	0.00	0.00	0.00	0.00	0.00	0.00	0.00	0.00	XXX
J3303		E	Triamcinolone hexacetonl inj	0.00	0.00	0.00	0.00	0.00	0.00	0.00	0.00	0.00	0.00	XXX

[1] CPT codes and descriptions only are copyright 2000 American Medical Association. All Rights Reserved. Applicable FARS/DFARS Apply.
[2] Copyright 1994 American Dental Association. All rights reserved.
[3] + Indicates RVUs are not used for Medicare payment.
[4] PE RVUs = Practice Expense Relative Value Units.

ADDENDUM B.—RELATIVE VALUE UNITS (RVU'S) AND RELATED INFORMATION—Continued

CPT[1]/ HCPCS[2]	MOD	Status	Description	Physician Work RVUs[3]	Fully Implemented Non-Facility PE RVUs	Year 2001 Transitional Non-Facility PE RVUs	Fully Implemented Facility PE RVUs	Year 2001 Transitional Facility PE RVUs	Mal-Practice RVUs	Fully Implemented Non-Facility Total	Year 2001 Transitional Non-Facility Total	Fully Implemented Facility Total	Year 2001 Transitional Facility Total	Global
J3305		E	Inj trimetrexate glucoronate	0.00	0.00	0.00	0.00	0.00	0.00	0.00	0.00	0.00	0.00	XXX
J3310		E	Perphenazine injeciton	0.00	0.00	0.00	0.00	0.00	0.00	0.00	0.00	0.00	0.00	XXX
J3320		E	Spectinomycn di-hcl inj	0.00	0.00	0.00	0.00	0.00	0.00	0.00	0.00	0.00	0.00	XXX
J3350		E	Urea injection	0.00	0.00	0.00	0.00	0.00	0.00	0.00	0.00	0.00	0.00	XXX
J3360		E	Diazepam injection	0.00	0.00	0.00	0.00	0.00	0.00	0.00	0.00	0.00	0.00	XXX
J3364		E	Urokinase 5000 IU injection	0.00	0.00	0.00	0.00	0.00	0.00	0.00	0.00	0.00	0.00	XXX
J3365		E	Urokinase 250,000 IU inj	0.00	0.00	0.00	0.00	0.00	0.00	0.00	0.00	0.00	0.00	XXX
J3370		R	Vancomycin hcl injeciton	0.00	0.00	0.00	0.00	0.00	0.00	0.00	0.00	0.00	0.00	XXX
J3390		E	Methoxamine injection	0.00	0.00	0.00	0.00	0.00	0.00	0.00	0.00	0.00	0.00	XXX
J3400		E	Triflupromazine hcl inj	0.00	0.00	0.00	0.00	0.00	0.00	0.00	0.00	0.00	0.00	XXX
J3410		E	Hydroxyzine hcl injeciton	0.00	0.00	0.00	0.00	0.00	0.00	0.00	0.00	0.00	0.00	XXX
J3420		E	Vitamin b12 injection	0.00	0.00	0.00	0.00	0.00	0.00	0.00	0.00	0.00	0.00	XXX
J3430		E	Vitamin k phytonadione inj	0.00	0.00	0.00	0.00	0.00	0.00	0.00	0.00	0.00	0.00	XXX
J3450		E	Mephentermine sulfate inj	0.00	0.00	0.00	0.00	0.00	0.00	0.00	0.00	0.00	0.00	XXX
J3470		E	Hyaluronidase injection	0.00	0.00	0.00	0.00	0.00	0.00	0.00	0.00	0.00	0.00	XXX
J3475		E	Inj magnesium sulfate	0.00	0.00	0.00	0.00	0.00	0.00	0.00	0.00	0.00	0.00	XXX
J3480		E	Inj potassium chloride	0.00	0.00	0.00	0.00	0.00	0.00	0.00	0.00	0.00	0.00	XXX
J3485		E	Zidovudine	0.00	0.00	0.00	0.00	0.00	0.00	0.00	0.00	0.00	0.00	XXX
J3490		E	Drugs unclassified injection	0.00	0.00	0.00	0.00	0.00	0.00	0.00	0.00	0.00	0.00	XXX
J3520		N	Edetate disodium per 150 mg	0.00	0.00	0.00	0.00	0.00	0.00	0.00	0.00	0.00	0.00	XXX
J3530		E	Nasal vaccine inhalation	0.00	0.00	0.00	0.00	0.00	0.00	0.00	0.00	0.00	0.00	XXX
J3535		N	Metered dose inhaler drug	0.00	0.00	0.00	0.00	0.00	0.00	0.00	0.00	0.00	0.00	XXX
J3570		N	Laetrile amygdalin vit B17	0.00	0.00	0.00	0.00	0.00	0.00	0.00	0.00	0.00	0.00	XXX
J7030		E	Normal saline solution infus	0.00	0.00	0.00	0.00	0.00	0.00	0.00	0.00	0.00	0.00	XXX
J7040		E	Normal saline solution infus	0.00	0.00	0.00	0.00	0.00	0.00	0.00	0.00	0.00	0.00	XXX
J7042		E	5% dextrose/normal saline	0.00	0.00	0.00	0.00	0.00	0.00	0.00	0.00	0.00	0.00	XXX
J7050		E	Normal saline solution infus	0.00	0.00	0.00	0.00	0.00	0.00	0.00	0.00	0.00	0.00	XXX
J7051		E	Sterile saline/water	0.00	0.00	0.00	0.00	0.00	0.00	0.00	0.00	0.00	0.00	XXX
J7060		E	5% dextrose/water	0.00	0.00	0.00	0.00	0.00	0.00	0.00	0.00	0.00	0.00	XXX
J7070		E	D5w infusion	0.00	0.00	0.00	0.00	0.00	0.00	0.00	0.00	0.00	0.00	XXX
J7100		E	Dextran 40 infusion	0.00	0.00	0.00	0.00	0.00	0.00	0.00	0.00	0.00	0.00	XXX
J7110		E	Dextran 75 infusion	0.00	0.00	0.00	0.00	0.00	0.00	0.00	0.00	0.00	0.00	XXX
J7120		E	Ringers lactate infusion	0.00	0.00	0.00	0.00	0.00	0.00	0.00	0.00	0.00	0.00	XXX
J7130		E	Hypertonic saline solution	0.00	0.00	0.00	0.00	0.00	0.00	0.00	0.00	0.00	0.00	XXX
J7190		X	Factor viii	0.00	0.00	0.00	0.00	0.00	0.00	0.00	0.00	0.00	0.00	XXX
J7191		X	Factor VIII (porcine)	0.00	0.00	0.00	0.00	0.00	0.00	0.00	0.00	0.00	0.00	XXX
J7192		X	Factor viii recombinant	0.00	0.00	0.00	0.00	0.00	0.00	0.00	0.00	0.00	0.00	XXX
J7194		X	Factor ix complex	0.00	0.00	0.00	0.00	0.00	0.00	0.00	0.00	0.00	0.00	XXX
J7197		X	Antithrombin iii injection	0.00	0.00	0.00	0.00	0.00	0.00	0.00	0.00	0.00	0.00	XXX
J7198		E	Anti-inhibitor	0.00	0.00	0.00	0.00	0.00	0.00	0.00	0.00	0.00	0.00	XXX
J7199		E	Hemophilia clot factor noc	0.00	0.00	0.00	0.00	0.00	0.00	0.00	0.00	0.00	0.00	XXX
J7300		N	Intraut copper contraceptive	0.00	0.00	0.00	0.00	0.00	0.00	0.00	0.00	0.00	0.00	XXX
J7310		E	Ganciclovir long act implant	0.00	0.00	0.00	0.00	0.00	0.00	0.00	0.00	0.00	0.00	XXX
J7315		E	Sodium hyaluronate injection	0.00	0.00	0.00	0.00	0.00	0.00	0.00	0.00	0.00	0.00	XXX
J7320		E	Hylan G-F 20 injection	0.00	0.00	0.00	0.00	0.00	0.00	0.00	0.00	0.00	0.00	XXX
J7330		E	Cultured chondrocytes implnt	0.00	0.00	0.00	0.00	0.00	0.00	0.00	0.00	0.00	0.00	XXX
J7500		X	Azathioprine oral 50mg	0.00	0.00	0.00	0.00	0.00	0.00	0.00	0.00	0.00	0.00	XXX
J7501		X	Azathioprine parenteral	0.00	0.00	0.00	0.00	0.00	0.00	0.00	0.00	0.00	0.00	XXX
J7502		E	Cyclosporine oral 100 mg	0.00	0.00	0.00	0.00	0.00	0.00	0.00	0.00	0.00	0.00	XXX
J7504		X	Lymphocyte immune globulin	0.00	0.00	0.00	0.00	0.00	0.00	0.00	0.00	0.00	0.00	XXX
J7505		X	Monoclonal antibodies	0.00	0.00	0.00	0.00	0.00	0.00	0.00	0.00	0.00	0.00	XXX
J7506		X	Prednisone oral	0.00	0.00	0.00	0.00	0.00	0.00	0.00	0.00	0.00	0.00	XXX
J7507		E	Tacrolimus oral per 1 MG	0.00	0.00	0.00	0.00	0.00	0.00	0.00	0.00	0.00	0.00	XXX
J7508		E	Tacrolimus oral per 5 MG	0.00	0.00	0.00	0.00	0.00	0.00	0.00	0.00	0.00	0.00	XXX
J7509		X	Methylprednisolone oral	0.00	0.00	0.00	0.00	0.00	0.00	0.00	0.00	0.00	0.00	XXX
J7510		X	Prednisolone oral per 5 mg	0.00	0.00	0.00	0.00	0.00	0.00	0.00	0.00	0.00	0.00	XXX
J7513		E	Daclizumab, parenteral	0.00	0.00	0.00	0.00	0.00	0.00	0.00	0.00	0.00	0.00	XXX
J7515		E	Cyclosporine oral 25 mg	0.00	0.00	0.00	0.00	0.00	0.00	0.00	0.00	0.00	0.00	XXX
J7516		E	Cyclosporin parenteral 250mg	0.00	0.00	0.00	0.00	0.00	0.00	0.00	0.00	0.00	0.00	XXX
J7517		E	Mycophenolate mofetil oral	0.00	0.00	0.00	0.00	0.00	0.00	0.00	0.00	0.00	0.00	XXX
J7520		E	Sirolimus, oral	0.00	0.00	0.00	0.00	0.00	0.00	0.00	0.00	0.00	0.00	XXX
J7525		E	Tacrolimus injection	0.00	0.00	0.00	0.00	0.00	0.00	0.00	0.00	0.00	0.00	XXX
J7599		X	Immunosuppressive drug noc	0.00	0.00	0.00	0.00	0.00	0.00	0.00	0.00	0.00	0.00	XXX
J7608		E	Acetylcysteine inh sol u d	0.00	0.00	0.00	0.00	0.00	0.00	0.00	0.00	0.00	0.00	XXX
J7610		D	Acetylcysteine 10% injection	0.00	0.00	0.00	0.00	0.00	0.00	0.00	0.00	0.00	0.00	XXX
J7615		D	Acetylcysteine 20% injection	0.00	0.00	0.00	0.00	0.00	0.00	0.00	0.00	0.00	0.00	XXX
J7618		E	Albuterol inh sol con	0.00	0.00	0.00	0.00	0.00	0.00	0.00	0.00	0.00	0.00	XXX
J7619		E	Albuterol inh sol u d	0.00	0.00	0.00	0.00	0.00	0.00	0.00	0.00	0.00	0.00	XXX
J7620		D	Albuterol sulfate .083%/ml	0.00	0.00	0.00	0.00	0.00	0.00	0.00	0.00	0.00	0.00	XXX
J7625		D	Albuterol sulfate .5% inj	0.00	0.00	0.00	0.00	0.00	0.00	0.00	0.00	0.00	0.00	XXX
J7627		D	Bitolterolmesylate inhal sol	0.00	0.00	0.00	0.00	0.00	0.00	0.00	0.00	0.00	0.00	XXX
J7628		E	Bitolterol mes inhal sol con	0.00	0.00	0.00	0.00	0.00	0.00	0.00	0.00	0.00	0.00	XXX
J7629		E	Bitolterol mes inh sol u d	0.00	0.00	0.00	0.00	0.00	0.00	0.00	0.00	0.00	0.00	XXX
J7630		D	Cromolyn sodium injeciton	0.00	0.00	0.00	0.00	0.00	0.00	0.00	0.00	0.00	0.00	XXX
J7631		E	Cromolyn sodium inh sol u d	0.00	0.00	0.00	0.00	0.00	0.00	0.00	0.00	0.00	0.00	XXX
J7635		E	Atropine inhal sol con	0.00	0.00	0.00	0.00	0.00	0.00	0.00	0.00	0.00	0.00	XXX
J7636		E	Atropine inhal sol unit dose	0.00	0.00	0.00	0.00	0.00	0.00	0.00	0.00	0.00	0.00	XXX
J7637		E	Dexamethasone inhal sol con	0.00	0.00	0.00	0.00	0.00	0.00	0.00	0.00	0.00	0.00	XXX
J7638		E	Dexamethasone inhal sol u d	0.00	0.00	0.00	0.00	0.00	0.00	0.00	0.00	0.00	0.00	XXX
J7639		E	Dornase alpha inhal sol u d	0.00	0.00	0.00	0.00	0.00	0.00	0.00	0.00	0.00	0.00	XXX
J7640		D	Epinephrine injection	0.00	0.00	0.00	0.00	0.00	0.00	0.00	0.00	0.00	0.00	XXX
J7642		E	Glycopyrrolate inhal sol con	0.00	0.00	0.00	0.00	0.00	0.00	0.00	0.00	0.00	0.00	XXX
J7643		E	Glycopyrrolate inhal sol u d	0.00	0.00	0.00	0.00	0.00	0.00	0.00	0.00	0.00	0.00	XXX

[1] CPT codes and descriptions only are copyright 2000 American Medical Association. All Rights Reserved. Applicable FARS/DFARS Apply.
[2] Copyright 1994 American Dental Association. All rights reserved.
[3] + Indicates RVUs are not used for Medicare payment.
[4] PE RVUs = Practice Expense Relative Value Units.

ADDENDUM B.—RELATIVE VALUE UNITS (RVU'S) AND RELATED INFORMATION—Continued

CPT[1]/ HCPCS[2]	MOD	Status	Description	Physician Work RVUs[3]	Fully Implemented Non-Facility PE RVUs	Year 2001 Transitional Non-Facility PE RVUs	Fully Implemented Facility PE RVUs	Year 2001 Transitional Facility PE RVUs	Mal-Practice RVUs	Fully Implemented Non-Facility Total	Year 2001 Transitional Non-Facility Total	Fully Implemented Facility Total	Year 2001 Transitional Facility Total	Global
J7644		E	Ipratropium brom inh sol u d	0.00	0.00	0.00	0.00	0.00	0.00	0.00	0.00	0.00	0.00	XXX
J7645		D	Ipratropium bromide .02%/ml	0.00	0.00	0.00	0.00	0.00	0.00	0.00	0.00	0.00	0.00	XXX
J7648		E	Isoetharine hcl inh sol con	0.00	0.00	0.00	0.00	0.00	0.00	0.00	0.00	0.00	0.00	XXX
J7649		E	Isoetharine hcl inh sol u d	0.00	0.00	0.00	0.00	0.00	0.00	0.00	0.00	0.00	0.00	XXX
J7650		D	Isoetharine hcl .1% inj	0.00	0.00	0.00	0.00	0.00	0.00	0.00	0.00	0.00	0.00	XXX
J7651		D	Isoetharine hcl .125% inj	0.00	0.00	0.00	0.00	0.00	0.00	0.00	0.00	0.00	0.00	XXX
J7652		D	Isoetharine hcl .167% inj	0.00	0.00	0.00	0.00	0.00	0.00	0.00	0.00	0.00	0.00	XXX
J7653		D	Isoetharine hcl .2%/ inj	0.00	0.00	0.00	0.00	0.00	0.00	0.00	0.00	0.00	0.00	XXX
J7654		D	Isoetharine hcl .25% inj	0.00	0.00	0.00	0.00	0.00	0.00	0.00	0.00	0.00	0.00	XXX
J7655		D	Isoetharine hcl 1% inj	0.00	0.00	0.00	0.00	0.00	0.00	0.00	0.00	0.00	0.00	XXX
J7658		E	Isoproterenolhcl inh sol con	0.00	0.00	0.00	0.00	0.00	0.00	0.00	0.00	0.00	0.00	XXX
J7659		E	Isoproterenol hcl inh sol ud	0.00	0.00	0.00	0.00	0.00	0.00	0.00	0.00	0.00	0.00	XXX
J7660		D	Isoproterenol hcl .5% inj	0.00	0.00	0.00	0.00	0.00	0.00	0.00	0.00	0.00	0.00	XXX
J7665		D	Isoproterenol hcl 1% inj	0.00	0.00	0.00	0.00	0.00	0.00	0.00	0.00	0.00	0.00	XXX
J7668		E	Metaproterenol inh sol con	0.00	0.00	0.00	0.00	0.00	0.00	0.00	0.00	0.00	0.00	XXX
J7669		E	Metaproterenol inh sol u d	0.00	0.00	0.00	0.00	0.00	0.00	0.00	0.00	0.00	0.00	XXX
J7670		D	Metaproterenol sulfate .4%	0.00	0.00	0.00	0.00	0.00	0.00	0.00	0.00	0.00	0.00	XXX
J7672		D	Metaproterenol sulfate .6%	0.00	0.00	0.00	0.00	0.00	0.00	0.00	0.00	0.00	0.00	XXX
J7675		D	Metaproterenol sulfate 5%	0.00	0.00	0.00	0.00	0.00	0.00	0.00	0.00	0.00	0.00	XXX
J7680		E	Terbutaline so4 inh sol con	0.00	0.00	0.00	0.00	0.00	0.00	0.00	0.00	0.00	0.00	XXX
J7681		E	Terbutaline so4 inh sol u d	0.00	0.00	0.00	0.00	0.00	0.00	0.00	0.00	0.00	0.00	XXX
J7682		E	Tobramycin inhalation sol	0.00	0.00	0.00	0.00	0.00	0.00	0.00	0.00	0.00	0.00	XXX
J7683		E	Triamcinolone inh sol con	0.00	0.00	0.00	0.00	0.00	0.00	0.00	0.00	0.00	0.00	XXX
J7684		E	Triamcinolone inh sol u d	0.00	0.00	0.00	0.00	0.00	0.00	0.00	0.00	0.00	0.00	XXX
J7699		E	Inhalation solution for DME	0.00	0.00	0.00	0.00	0.00	0.00	0.00	0.00	0.00	0.00	XXX
J7799		E	Non-inhalation drug for DME	0.00	0.00	0.00	0.00	0.00	0.00	0.00	0.00	0.00	0.00	XXX
J8499		N	Oral prescrip drug non chemo	0.00	0.00	0.00	0.00	0.00	0.00	0.00	0.00	0.00	0.00	XXX
J8510		E	Oral busulfan	0.00	0.00	0.00	0.00	0.00	0.00	0.00	0.00	0.00	0.00	XXX
J8520		E	Capecitabine, oral, 150 mg	0.00	0.00	0.00	0.00	0.00	0.00	0.00	0.00	0.00	0.00	XXX
J8521		E	Capecitabine, oral, 500 mg	0.00	0.00	0.00	0.00	0.00	0.00	0.00	0.00	0.00	0.00	XXX
J8530		E	Cyclophosphamide oral 25 MG	0.00	0.00	0.00	0.00	0.00	0.00	0.00	0.00	0.00	0.00	XXX
J8560		E	Etoposide oral 50 MG	0.00	0.00	0.00	0.00	0.00	0.00	0.00	0.00	0.00	0.00	XXX
J8600		E	Melphalan oral 2 MG	0.00	0.00	0.00	0.00	0.00	0.00	0.00	0.00	0.00	0.00	XXX
J8610		E	Methotrexate oral 2.5 MG	0.00	0.00	0.00	0.00	0.00	0.00	0.00	0.00	0.00	0.00	XXX
J8700		E	Temozolmide	0.00	0.00	0.00	0.00	0.00	0.00	0.00	0.00	0.00	0.00	XXX
J8999		E	Oral prescription drug chemo	0.00	0.00	0.00	0.00	0.00	0.00	0.00	0.00	0.00	0.00	XXX
J9000		E	Doxorubic hcl 10 MG vl chemo	0.00	0.00	0.00	0.00	0.00	0.00	0.00	0.00	0.00	0.00	XXX
J9001		E	Doxorubicin hcl liposome inj	0.00	0.00	0.00	0.00	0.00	0.00	0.00	0.00	0.00	0.00	XXX
J9015		E	Aldesleukin/single use vial	0.00	0.00	0.00	0.00	0.00	0.00	0.00	0.00	0.00	0.00	XXX
J9020		E	Asparaginase injection	0.00	0.00	0.00	0.00	0.00	0.00	0.00	0.00	0.00	0.00	XXX
J9031		E	Bcg live intravesical vac	0.00	0.00	0.00	0.00	0.00	0.00	0.00	0.00	0.00	0.00	XXX
J9040		E	Bleomycin sulfate injection	0.00	0.00	0.00	0.00	0.00	0.00	0.00	0.00	0.00	0.00	XXX
J9045		E	Carboplatin injection	0.00	0.00	0.00	0.00	0.00	0.00	0.00	0.00	0.00	0.00	XXX
J9050		E	Carmus bischl nitro inj	0.00	0.00	0.00	0.00	0.00	0.00	0.00	0.00	0.00	0.00	XXX
J9060		E	Cisplatin 10 MG injeciton	0.00	0.00	0.00	0.00	0.00	0.00	0.00	0.00	0.00	0.00	XXX
J9062		E	Cisplatin 50 MG injeciton	0.00	0.00	0.00	0.00	0.00	0.00	0.00	0.00	0.00	0.00	XXX
J9065		E	Inj cladribine per 1 MG	0.00	0.00	0.00	0.00	0.00	0.00	0.00	0.00	0.00	0.00	XXX
J9070		E	Cyclophosphamide 100 MG inj	0.00	0.00	0.00	0.00	0.00	0.00	0.00	0.00	0.00	0.00	XXX
J9080		E	Cyclophosphamide 200 MG inj	0.00	0.00	0.00	0.00	0.00	0.00	0.00	0.00	0.00	0.00	XXX
J9090		E	Cyclophosphamide 500 MG inj	0.00	0.00	0.00	0.00	0.00	0.00	0.00	0.00	0.00	0.00	XXX
J9091		E	Cyclophosphamide 1.0 grm inj	0.00	0.00	0.00	0.00	0.00	0.00	0.00	0.00	0.00	0.00	XXX
J9092		E	Cyclophosphamide 2.0 grm inj	0.00	0.00	0.00	0.00	0.00	0.00	0.00	0.00	0.00	0.00	XXX
J9093		E	Cyclophosphamide lyophilized	0.00	0.00	0.00	0.00	0.00	0.00	0.00	0.00	0.00	0.00	XXX
J9094		E	Cyclophosphamide lyophilized	0.00	0.00	0.00	0.00	0.00	0.00	0.00	0.00	0.00	0.00	XXX
J9095		E	Cyclophosphamide lyophilized	0.00	0.00	0.00	0.00	0.00	0.00	0.00	0.00	0.00	0.00	XXX
J9096		E	Cyclophosphamide lyophilized	0.00	0.00	0.00	0.00	0.00	0.00	0.00	0.00	0.00	0.00	XXX
J9097		E	Cyclophosphamide lyophilized	0.00	0.00	0.00	0.00	0.00	0.00	0.00	0.00	0.00	0.00	XXX
J9100		E	Cytarabine hcl 100 MG inj	0.00	0.00	0.00	0.00	0.00	0.00	0.00	0.00	0.00	0.00	XXX
J9110		E	Cytarabine hcl 500 MG inj	0.00	0.00	0.00	0.00	0.00	0.00	0.00	0.00	0.00	0.00	XXX
J9120		E	Dactinomycin actinomycin d	0.00	0.00	0.00	0.00	0.00	0.00	0.00	0.00	0.00	0.00	XXX
J9130		E	Dacarbazine 10 MG inj	0.00	0.00	0.00	0.00	0.00	0.00	0.00	0.00	0.00	0.00	XXX
J9140		E	Dacarbazine 200 MG inj	0.00	0.00	0.00	0.00	0.00	0.00	0.00	0.00	0.00	0.00	XXX
J9150		E	Daunorubicin	0.00	0.00	0.00	0.00	0.00	0.00	0.00	0.00	0.00	0.00	XXX
J9151		E	Daunorubicin citrate liposom	0.00	0.00	0.00	0.00	0.00	0.00	0.00	0.00	0.00	0.00	XXX
J9160		E	Denileukin diftitox, 300 mcg	0.00	0.00	0.00	0.00	0.00	0.00	0.00	0.00	0.00	0.00	XXX
J9165		E	Diethylstilbestrol injection	0.00	0.00	0.00	0.00	0.00	0.00	0.00	0.00	0.00	0.00	XXX
J9170		E	Docetaxel	0.00	0.00	0.00	0.00	0.00	0.00	0.00	0.00	0.00	0.00	XXX
J9180		E	Epirubicin HCl injection	0.00	0.00	0.00	0.00	0.00	0.00	0.00	0.00	0.00	0.00	XXX
J9181		E	Etoposide 10 MG inj	0.00	0.00	0.00	0.00	0.00	0.00	0.00	0.00	0.00	0.00	XXX
J9182		E	Etoposide 100 MG inj	0.00	0.00	0.00	0.00	0.00	0.00	0.00	0.00	0.00	0.00	XXX
J9185		E	Fludarabine phosphate inj	0.00	0.00	0.00	0.00	0.00	0.00	0.00	0.00	0.00	0.00	XXX
J9190		E	Fluorouracil injection	0.00	0.00	0.00	0.00	0.00	0.00	0.00	0.00	0.00	0.00	XXX
J9200		E	Floxuridine injection	0.00	0.00	0.00	0.00	0.00	0.00	0.00	0.00	0.00	0.00	XXX
J9201		E	Gemcitabine HCl	0.00	0.00	0.00	0.00	0.00	0.00	0.00	0.00	0.00	0.00	XXX
J9202		E	Goserelin acetate implant	0.00	0.00	0.00	0.00	0.00	0.00	0.00	0.00	0.00	0.00	XXX
J9206		E	Irinotecan injection	0.00	0.00	0.00	0.00	0.00	0.00	0.00	0.00	0.00	0.00	XXX
J9208		E	Ifosfomide injection	0.00	0.00	0.00	0.00	0.00	0.00	0.00	0.00	0.00	0.00	XXX
J9209		E	Mesna injection	0.00	0.00	0.00	0.00	0.00	0.00	0.00	0.00	0.00	0.00	XXX
J9211		E	Idarubicin hcl injeciton	0.00	0.00	0.00	0.00	0.00	0.00	0.00	0.00	0.00	0.00	XXX
J9212		E	Interferon alfacon-1	0.00	0.00	0.00	0.00	0.00	0.00	0.00	0.00	0.00	0.00	XXX
J9213		E	Interferon alfa-2a inj	0.00	0.00	0.00	0.00	0.00	0.00	0.00	0.00	0.00	0.00	XXX
J9214		E	Interferon alfa-2b inj	0.00	0.00	0.00	0.00	0.00	0.00	0.00	0.00	0.00	0.00	XXX
J9215		E	Interferon alfa-n3 inj	0.00	0.00	0.00	0.00	0.00	0.00	0.00	0.00	0.00	0.00	XXX

[1] CPT codes and descriptions only are copyright 2000 American Medical Association. All Rights Reserved. Applicable FARS/DFARS Apply.
[2] Copyright 1994 American Dental Association. All rights reserved.
[3] + Indicates RVUs are not used for Medicare payment.
[4] PE RVUs = Practice Expense Relative Value Units.

ADDENDUM B.—RELATIVE VALUE UNITS (RVU'S) AND RELATED INFORMATION—Continued

CPT[1]/ HCPCS[2]	MOD	Status	Description	Physician Work RVUs[3]	Fully Implemented Non-Facility PE RVUs	Year 2001 Transitional Non-Facility PE RVUs	Fully Implemented Facility PE RVUs	Year 2001 Transitional Facility PE RVUs	Mal-Practice RVUs	Fully Implemented Non-Facility Total	Year 2001 Transitional Non-Facility Total	Fully Implemented Facility Total	Year 2001 Transitional Facility Total	Global
J9216		E	Interferon gamma 1-b inj	0.00	0.00	0.00	0.00	0.00	0.00	0.00	0.00	0.00	0.00	XXX
J9217		E	Leuprolide acetate suspnsion	0.00	0.00	0.00	0.00	0.00	0.00	0.00	0.00	0.00	0.00	XXX
J9218		E	Leuprolide acetate injeciton	0.00	0.00	0.00	0.00	0.00	0.00	0.00	0.00	0.00	0.00	XXX
J9219		E	Leuprolide acetate implant	0.00	0.00	0.00	0.00	0.00	0.00	0.00	0.00	0.00	0.00	XXX
J9230		E	Mechlorethamine hcl inj	0.00	0.00	0.00	0.00	0.00	0.00	0.00	0.00	0.00	0.00	XXX
J9245		E	Inj melphalan hydrochl 50 MG	0.00	0.00	0.00	0.00	0.00	0.00	0.00	0.00	0.00	0.00	XXX
J9250		E	Methotrexate sodium inj	0.00	0.00	0.00	0.00	0.00	0.00	0.00	0.00	0.00	0.00	XXX
J9260		E	Methotrexate sodium inj	0.00	0.00	0.00	0.00	0.00	0.00	0.00	0.00	0.00	0.00	XXX
J9265		E	Paclitaxel injection	0.00	0.00	0.00	0.00	0.00	0.00	0.00	0.00	0.00	0.00	XXX
J9266		E	Pegaspargase/singl dose vial	0.00	0.00	0.00	0.00	0.00	0.00	0.00	0.00	0.00	0.00	XXX
J9268		E	Pentostatin injection	0.00	0.00	0.00	0.00	0.00	0.00	0.00	0.00	0.00	0.00	XXX
J9270		E	Plicamycin (mithramycin) inj	0.00	0.00	0.00	0.00	0.00	0.00	0.00	0.00	0.00	0.00	XXX
J9280		E	Mitomycin 5 MG inj	0.00	0.00	0.00	0.00	0.00	0.00	0.00	0.00	0.00	0.00	XXX
J9290		E	Mitomycin 20 MG inj	0.00	0.00	0.00	0.00	0.00	0.00	0.00	0.00	0.00	0.00	XXX
J9291		E	Mitomycin 40 MG inj	0.00	0.00	0.00	0.00	0.00	0.00	0.00	0.00	0.00	0.00	XXX
J9293		E	Mitoxantrone hydrochl / 5 MG	0.00	0.00	0.00	0.00	0.00	0.00	0.00	0.00	0.00	0.00	XXX
J9310		E	Rituximab cancer treatment	0.00	0.00	0.00	0.00	0.00	0.00	0.00	0.00	0.00	0.00	XXX
J9320		E	Streptozocin injection	0.00	0.00	0.00	0.00	0.00	0.00	0.00	0.00	0.00	0.00	XXX
J9340		E	Thiotepa injection	0.00	0.00	0.00	0.00	0.00	0.00	0.00	0.00	0.00	0.00	XXX
J9350		E	Topotecan	0.00	0.00	0.00	0.00	0.00	0.00	0.00	0.00	0.00	0.00	XXX
J9355		E	Trastuzumab	0.00	0.00	0.00	0.00	0.00	0.00	0.00	0.00	0.00	0.00	XXX
J9357		E	Valrubicin, 200 mg	0.00	0.00	0.00	0.00	0.00	0.00	0.00	0.00	0.00	0.00	XXX
J9360		E	Vinblastine sulfate inj	0.00	0.00	0.00	0.00	0.00	0.00	0.00	0.00	0.00	0.00	XXX
J9370		E	Vincristine sulfate 1 MG inj	0.00	0.00	0.00	0.00	0.00	0.00	0.00	0.00	0.00	0.00	XXX
J9375		E	Vincristine sulfate 2 MG inj	0.00	0.00	0.00	0.00	0.00	0.00	0.00	0.00	0.00	0.00	XXX
J9380		E	Vincristine sulfate 5 MG inj	0.00	0.00	0.00	0.00	0.00	0.00	0.00	0.00	0.00	0.00	XXX
J9390		E	Vinorelbine tartrate/10 mg	0.00	0.00	0.00	0.00	0.00	0.00	0.00	0.00	0.00	0.00	XXX
J9600		E	Porfimer sodium	0.00	0.00	0.00	0.00	0.00	0.00	0.00	0.00	0.00	0.00	XXX
J9999		E	Chemotherapy drug	0.00	0.00	0.00	0.00	0.00	0.00	0.00	0.00	0.00	0.00	XXX
M0064		A	Visit for drug monitoring	0.37	0.26	0.25	0.12	0.14	0.01	0.64	0.63	0.50	0.52	XXX
M0075		N	Cellular therapy	0.00	0.00	0.00	0.00	0.00	0.00	0.00	0.00	0.00	0.00	XXX
M0076		N	Prolotherapy	0.00	0.00	0.00	0.00	0.00	0.00	0.00	0.00	0.00	0.00	XXX
M0100		N	Intragastric hypothermia	0.00	0.00	0.00	0.00	0.00	0.00	0.00	0.00	0.00	0.00	XXX
M0300		N	IV chelationtherapy	0.00	0.00	0.00	0.00	0.00	0.00	0.00	0.00	0.00	0.00	XXX
M0301		N	Fabric wrapping of aneurysm	0.00	0.00	0.00	0.00	0.00	0.00	0.00	0.00	0.00	0.00	XXX
M0302		A	Assessment of cardiac output	0.17	0.88	0.88	0.88	0.88	0.02	1.07	1.07	1.07	1.07	XXX
M0302	26	A	Assessment of cardiac output	0.17	0.08	0.08	0.08	0.08	0.01	0.26	0.26	0.26	0.26	XXX
M0302	TC	A	Assessment of cardiac output	0.00	0.80	0.80	NA	NA	0.01	0.81	0.81	NA	NA	XXX
P2028		X	Cephalin floculation test	0.00	0.00	0.00	0.00	0.00	0.00	0.00	0.00	0.00	0.00	XXX
P2029		X	Congo red blood test	0.00	0.00	0.00	0.00	0.00	0.00	0.00	0.00	0.00	0.00	XXX
P2031		N	Hair analysis	0.00	0.00	0.00	0.00	0.00	0.00	0.00	0.00	0.00	0.00	XXX
P2033		X	Blood thymol turbidity	0.00	0.00	0.00	0.00	0.00	0.00	0.00	0.00	0.00	0.00	XXX
P2038		X	Blood mucoprotein	0.00	0.00	0.00	0.00	0.00	0.00	0.00	0.00	0.00	0.00	XXX
P3000		X	Screen pap by tech w md supv	0.00	0.00	0.00	0.00	0.00	0.00	0.00	0.00	0.00	0.00	XXX
P3001		A	Screening pap smear by phys	0.42	0.18	0.22	0.18	0.22	0.01	0.61	0.65	0.61	0.65	XXX
P7001		I	Culture bacterial urine	0.00	0.00	0.00	0.00	0.00	0.00	0.00	0.00	0.00	0.00	XXX
P9010		E	Whole blood for transfusion	0.00	0.00	0.00	0.00	0.00	0.00	0.00	0.00	0.00	0.00	XXX
P9011		E	Blood split unit	0.00	0.00	0.00	0.00	0.00	0.00	0.00	0.00	0.00	0.00	XXX
P9012		E	Cryoprecipitate each unit	0.00	0.00	0.00	0.00	0.00	0.00	0.00	0.00	0.00	0.00	XXX
P9013		D	Unit/s blood fibrinogen	0.00	0.00	0.00	0.00	0.00	0.00	0.00	0.00	0.00	0.00	XXX
P9016		E	RBC leukocytes reduced	0.00	0.00	0.00	0.00	0.00	0.00	0.00	0.00	0.00	0.00	XXX
P9017		E	One donor fresh frozn plasma	0.00	0.00	0.00	0.00	0.00	0.00	0.00	0.00	0.00	0.00	XXX
P9018		D	Plasma protein fract, unit	0.00	0.00	0.00	0.00	0.00	0.00	0.00	0.00	0.00	0.00	XXX
P9019		E	Platelets, each unit	0.00	0.00	0.00	0.00	0.00	0.00	0.00	0.00	0.00	0.00	XXX
P9020		E	Plaelet rich plasma unit	0.00	0.00	0.00	0.00	0.00	0.00	0.00	0.00	0.00	0.00	XXX
P9021		E	Red blood cells unit	0.00	0.00	0.00	0.00	0.00	0.00	0.00	0.00	0.00	0.00	XXX
P9022		E	Washed red blood cells unit	0.00	0.00	0.00	0.00	0.00	0.00	0.00	0.00	0.00	0.00	XXX
P9023		X	Frozen plasma, pooled, sd	0.00	0.00	0.00	0.00	0.00	0.00	0.00	0.00	0.00	0.00	XXX
P9031		X	Platelets leukocytes reduced	0.00	0.00	0.00	0.00	0.00	0.00	0.00	0.00	0.00	0.00	XXX
P9032		X	Platelets, irradiated	0.00	0.00	0.00	0.00	0.00	0.00	0.00	0.00	0.00	0.00	XXX
P9033		X	Platelets leukoreduced irrad	0.00	0.00	0.00	0.00	0.00	0.00	0.00	0.00	0.00	0.00	XXX
P9034		X	Platelets, pheresis	0.00	0.00	0.00	0.00	0.00	0.00	0.00	0.00	0.00	0.00	XXX
P9035		X	Platelet pheres leukoreduced	0.00	0.00	0.00	0.00	0.00	0.00	0.00	0.00	0.00	0.00	XXX
P9036		X	Platelet pheresis irradiated	0.00	0.00	0.00	0.00	0.00	0.00	0.00	0.00	0.00	0.00	XXX
P9037		X	Plate pheres leukoredu irrad	0.00	0.00	0.00	0.00	0.00	0.00	0.00	0.00	0.00	0.00	XXX
P9038		X	RBC irradiated	0.00	0.00	0.00	0.00	0.00	0.00	0.00	0.00	0.00	0.00	XXX
P9039		X	RBC deglycerolized	0.00	0.00	0.00	0.00	0.00	0.00	0.00	0.00	0.00	0.00	XXX
P9040		X	RBC leukoreduced irradiated	0.00	0.00	0.00	0.00	0.00	0.00	0.00	0.00	0.00	0.00	XXX
P9041		X	Albumin(human), 5%	0.00	0.00	0.00	0.00	0.00	0.00	0.00	0.00	0.00	0.00	XXX
P9042		X	Albumin (human), 25%	0.00	0.00	0.00	0.00	0.00	0.00	0.00	0.00	0.00	0.00	XXX
P9043		X	Plasma protein fraction	0.00	0.00	0.00	0.00	0.00	0.00	0.00	0.00	0.00	0.00	XXX
P9044		X	Cryoprecipitatereducedplasma	0.00	0.00	0.00	0.00	0.00	0.00	0.00	0.00	0.00	0.00	XXX
P9603		X	One-way allow prorated miles	0.00	0.00	0.00	0.00	0.00	0.00	0.00	0.00	0.00	0.00	XXX
P9604		X	One-way allow prorated trip	0.00	0.00	0.00	0.00	0.00	0.00	0.00	0.00	0.00	0.00	XXX
P9612		X	Catheterize for urine spec	0.00	0.00	0.00	0.00	0.00	0.00	0.00	0.00	0.00	0.00	XXX
P9615		X	Urine specimen collect mult	0.00	0.00	0.00	0.00	0.00	0.00	0.00	0.00	0.00	0.00	XXX
Q0034		D	Admin of influenza vaccine	0.00	0.00	0.00	0.00	0.00	0.00	0.00	0.00	0.00	0.00	XXX
Q0035		A	Cardiokymography	0.17	0.45	0.48	0.45	0.48	0.03	0.65	0.68	0.65	0.68	XXX
Q0035	26	A	Cardiokymography	0.17	0.07	0.09	0.07	0.09	0.01	0.25	0.27	0.25	0.27	XXX
Q0035	TC	A	Cardiokymography	0.00	0.38	0.39	NA	NA	0.02	0.40	0.41	NA	NA	XXX
Q0091		A	Obtaining screen pap smear	0.37	0.72	0.62	0.14	0.18	0.01	1.10	1.00	0.52	0.56	XXX
Q0092		A	Set up port xray equipment	0.00	0.32	0.32	NA	NA	0.01	0.33	0.33	NA	NA	XXX
Q0111		X	Wet mounts/ w preparations	0.00	0.00	0.00	0.00	0.00	0.00	0.00	0.00	0.00	0.00	XXX

[1] CPT codes and descriptions only are copyright 2000 American Medical Association. All Rights Reserved. Applicable FARS/DFARS Apply.
[2] Copyright 1994 American Dental Association. All rights reserved.
[3] + Indicates RVUs are not used for Medicare payment.
[4] PE RVUs = Practice Expense Relative Value Units.

ADDENDUM B.—RELATIVE VALUE UNITS (RVU'S) AND RELATED INFORMATION—Continued

CPT[1]/ HCPCS[2]	MOD	Status	Description	Physician Work RVUs[3]	Fully Implemented Non-Facility PE RVUs	Year 2001 Transitional Non-Facility PE RVUs	Fully Implemented Facility PE RVUs	Year 2001 Transitional Facility PE RVUs	Mal-Practice RVUs	Fully Implemented Non-Facility Total	Year 2001 Transitional Non-Facility Total	Fully Implemented Facility Total	Year 2001 Transitional Facility Total	Global
Q0112		X	Potassium hydroxide preps	0.00	0.00	0.00	0.00	0.00	0.00	0.00	0.00	0.00	0.00	XXX
Q0113		X	Pinworm examinations	0.00	0.00	0.00	0.00	0.00	0.00	0.00	0.00	0.00	0.00	XXX
Q0114		X	Fern test	0.00	0.00	0.00	0.00	0.00	0.00	0.00	0.00	0.00	0.00	XXX
Q0115		X	Post-coital mucous exam	0.00	0.00	0.00	0.00	0.00	0.00	0.00	0.00	0.00	0.00	XXX
Q0136		X	Non esrd epoetin alpha inj	0.00	0.00	0.00	0.00	0.00	0.00	0.00	0.00	0.00	0.00	XXX
Q0144		N	Azithromycin dihydrate, oral	0.00	0.00	0.00	0.00	0.00	0.00	0.00	0.00	0.00	0.00	XXX
Q0156		D	Human albumin 5%	0.00	0.00	0.00	0.00	0.00	0.00	0.00	0.00	0.00	0.00	XXX
Q0157		D	Human albumin 25%	0.00	0.00	0.00	0.00	0.00	0.00	0.00	0.00	0.00	0.00	XXX
Q0160		X	Factor IX non-recombinant	0.00	0.00	0.00	0.00	0.00	0.00	0.00	0.00	0.00	0.00	XXX
Q0161		X	Factor IX recombinant	0.00	0.00	0.00	0.00	0.00	0.00	0.00	0.00	0.00	0.00	XXX
Q0163		X	Diphenhydramine HCl 50mg	0.00	0.00	0.00	0.00	0.00	0.00	0.00	0.00	0.00	0.00	XXX
Q0164		X	Prochlorperazine maleate 5mg	0.00	0.00	0.00	0.00	0.00	0.00	0.00	0.00	0.00	0.00	XXX
Q0165		X	Prochlorperazine maleate10mg	0.00	0.00	0.00	0.00	0.00	0.00	0.00	0.00	0.00	0.00	XXX
Q0166		X	Granisetron HCl 1 mg oral	0.00	0.00	0.00	0.00	0.00	0.00	0.00	0.00	0.00	0.00	XXX
Q0167		X	Dronabinol 2.5mg oral	0.00	0.00	0.00	0.00	0.00	0.00	0.00	0.00	0.00	0.00	XXX
Q0168		X	Dronabinol 5mg oral	0.00	0.00	0.00	0.00	0.00	0.00	0.00	0.00	0.00	0.00	XXX
Q0169		X	Promethazine HCl 12.5mg oral	0.00	0.00	0.00	0.00	0.00	0.00	0.00	0.00	0.00	0.00	XXX
Q0170		X	Promethazine HCl 25 mg oral	0.00	0.00	0.00	0.00	0.00	0.00	0.00	0.00	0.00	0.00	XXX
Q0171		X	Chlorpromazine HCl 10mg oral	0.00	0.00	0.00	0.00	0.00	0.00	0.00	0.00	0.00	0.00	XXX
Q0172		X	Chlorpromazine HCl 25mg oral	0.00	0.00	0.00	0.00	0.00	0.00	0.00	0.00	0.00	0.00	XXX
Q0173		X	Trimethobenzamide HCl 250mg	0.00	0.00	0.00	0.00	0.00	0.00	0.00	0.00	0.00	0.00	XXX
Q0174		X	Thiethylperazine maleate10mg	0.00	0.00	0.00	0.00	0.00	0.00	0.00	0.00	0.00	0.00	XXX
Q0175		X	Perphenazine 4mg oral	0.00	0.00	0.00	0.00	0.00	0.00	0.00	0.00	0.00	0.00	XXX
Q0176		X	Perphenazine 8mg oral	0.00	0.00	0.00	0.00	0.00	0.00	0.00	0.00	0.00	0.00	XXX
Q0177		X	Hydroxyzine pamoate 25mg	0.00	0.00	0.00	0.00	0.00	0.00	0.00	0.00	0.00	0.00	XXX
Q0178		X	Hydroxyzine pamoate 50mg	0.00	0.00	0.00	0.00	0.00	0.00	0.00	0.00	0.00	0.00	XXX
Q0179		X	Ondansetron HCl 8mg oral	0.00	0.00	0.00	0.00	0.00	0.00	0.00	0.00	0.00	0.00	XXX
Q0180		X	Dolasetron mesylate oral	0.00	0.00	0.00	0.00	0.00	0.00	0.00	0.00	0.00	0.00	XXX
Q0181		X	Unspecified oral anti-emetic	0.00	0.00	0.00	0.00	0.00	0.00	0.00	0.00	0.00	0.00	XXX
Q0183		X	Nonmetabolic active tissue	0.00	0.00	0.00	0.00	0.00	0.00	0.00	0.00	0.00	0.00	XXX
Q0184		X	Metabolically active tissue	0.00	0.00	0.00	0.00	0.00	0.00	0.00	0.00	0.00	0.00	XXX
Q0185		X	Metabolic active D/E tissue	0.00	0.00	0.00	0.00	0.00	0.00	0.00	0.00	0.00	0.00	XXX
Q0186		D	Paramedic intercept, rural	0.00	0.00	0.00	0.00	0.00	0.00	0.00	0.00	0.00	0.00	XXX
Q0187		E	Factor viia recombinant	0.00	0.00	0.00	0.00	0.00	0.00	0.00	0.00	0.00	0.00	XXX
Q1001		X	Ntiol category 1	0.00	0.00	0.00	0.00	0.00	0.00	0.00	0.00	0.00	0.00	XXX
Q1002		X	Ntiol category 2	0.00	0.00	0.00	0.00	0.00	0.00	0.00	0.00	0.00	0.00	XXX
Q1003		X	Ntiol category 3	0.00	0.00	0.00	0.00	0.00	0.00	0.00	0.00	0.00	0.00	XXX
Q1004		X	Ntiol category 4	0.00	0.00	0.00	0.00	0.00	0.00	0.00	0.00	0.00	0.00	XXX
Q1005		X	Ntiol category 5	0.00	0.00	0.00	0.00	0.00	0.00	0.00	0.00	0.00	0.00	XXX
Q2001		N	Oral cabergoline 0.5 mg	0.00	0.00	0.00	0.00	0.00	0.00	0.00	0.00	0.00	0.00	XXX
Q2002		E	Elliotts b solution per ml	0.00	0.00	0.00	0.00	0.00	0.00	0.00	0.00	0.00	0.00	XXX
Q2003		E	Aprotinin, 10,000 kiu	0.00	0.00	0.00	0.00	0.00	0.00	0.00	0.00	0.00	0.00	XXX
Q2004		E	Bladder calculi irrig sol	0.00	0.00	0.00	0.00	0.00	0.00	0.00	0.00	0.00	0.00	XXX
Q2005		E	Corticorelin ovine triflutat	0.00	0.00	0.00	0.00	0.00	0.00	0.00	0.00	0.00	0.00	XXX
Q2006		E	Digoxin immune fab (ovine)	0.00	0.00	0.00	0.00	0.00	0.00	0.00	0.00	0.00	0.00	XXX
Q2007		E	Ethanolamine oleate 100 mg	0.00	0.00	0.00	0.00	0.00	0.00	0.00	0.00	0.00	0.00	XXX
Q2008		E	Fomepizole, 1.5 mg	0.00	0.00	0.00	0.00	0.00	0.00	0.00	0.00	0.00	0.00	XXX
Q2009		E	Fosphenytoin, 50 mg	0.00	0.00	0.00	0.00	0.00	0.00	0.00	0.00	0.00	0.00	XXX
Q2010		E	Glatiramer acetate, per dose	0.00	0.00	0.00	0.00	0.00	0.00	0.00	0.00	0.00	0.00	XXX
Q2011		E	Hemin, per 1 mg	0.00	0.00	0.00	0.00	0.00	0.00	0.00	0.00	0.00	0.00	XXX
Q2012		E	Pegademase bovine, 25 iu	0.00	0.00	0.00	0.00	0.00	0.00	0.00	0.00	0.00	0.00	XXX
Q2013		E	Pentastarch 10% solution	0.00	0.00	0.00	0.00	0.00	0.00	0.00	0.00	0.00	0.00	XXX
Q2014		E	Sermorelin acetate, 0.5 mg	0.00	0.00	0.00	0.00	0.00	0.00	0.00	0.00	0.00	0.00	XXX
Q2015		E	Somatrem, 5 mg	0.00	0.00	0.00	0.00	0.00	0.00	0.00	0.00	0.00	0.00	XXX
Q2016		E	Somatropin, 1 mg	0.00	0.00	0.00	0.00	0.00	0.00	0.00	0.00	0.00	0.00	XXX
Q2017		E	Teniposide, 50 mg	0.00	0.00	0.00	0.00	0.00	0.00	0.00	0.00	0.00	0.00	XXX
Q2018		E	Urofollitropin, 75 iu	0.00	0.00	0.00	0.00	0.00	0.00	0.00	0.00	0.00	0.00	XXX
Q2019		E	Basiliximab	0.00	0.00	0.00	0.00	0.00	0.00	0.00	0.00	0.00	0.00	XXX
Q2020		E	Histrelin acetate	0.00	0.00	0.00	0.00	0.00	0.00	0.00	0.00	0.00	0.00	XXX
Q2021		E	Lepirudin	0.00	0.00	0.00	0.00	0.00	0.00	0.00	0.00	0.00	0.00	XXX
Q2022		E	VonWillebrandFactrCmplxperIU	0.00	0.00	0.00	0.00	0.00	0.00	0.00	0.00	0.00	0.00	XXX
Q3001		E	Brachytherapy Radioelements	0.00	0.00	0.00	0.00	0.00	0.00	0.00	0.00	0.00	0.00	XXX
Q3002		E	Gallium ga 67	0.00	0.00	0.00	0.00	0.00	0.00	0.00	0.00	0.00	0.00	XXX
Q3003		E	Technetium tc99m bicisate	0.00	0.00	0.00	0.00	0.00	0.00	0.00	0.00	0.00	0.00	XXX
Q3004		E	Xenon xe 133	0.00	0.00	0.00	0.00	0.00	0.00	0.00	0.00	0.00	0.00	XXX
Q3005		E	Technetium tc99m mertiatide	0.00	0.00	0.00	0.00	0.00	0.00	0.00	0.00	0.00	0.00	XXX
Q3006		E	Technetium tc99m glucepatate	0.00	0.00	0.00	0.00	0.00	0.00	0.00	0.00	0.00	0.00	XXX
Q3007		E	Sodium phosphate p32	0.00	0.00	0.00	0.00	0.00	0.00	0.00	0.00	0.00	0.00	XXX
Q3008		E	Indium 111-in pentetreotide	0.00	0.00	0.00	0.00	0.00	0.00	0.00	0.00	0.00	0.00	XXX
Q3009		E	Technetium tc99m oxidronate	0.00	0.00	0.00	0.00	0.00	0.00	0.00	0.00	0.00	0.00	XXX
Q3010		E	Technetium tc99mlabeledrbcs	0.00	0.00	0.00	0.00	0.00	0.00	0.00	0.00	0.00	0.00	XXX
Q3011		E	Chromic phosphate p32	0.00	0.00	0.00	0.00	0.00	0.00	0.00	0.00	0.00	0.00	XXX
Q3012		E	Cyanocobalamin cobalt co57	0.00	0.00	0.00	0.00	0.00	0.00	0.00	0.00	0.00	0.00	XXX
Q9920		E	Epoetin with hct <= 20	0.00	0.00	0.00	0.00	0.00	0.00	0.00	0.00	0.00	0.00	XXX
Q9921		E	Epoetin with hct = 21	0.00	0.00	0.00	0.00	0.00	0.00	0.00	0.00	0.00	0.00	XXX
Q9922		E	Epoetin with hct = 22	0.00	0.00	0.00	0.00	0.00	0.00	0.00	0.00	0.00	0.00	XXX
Q9923		E	Epoetin with hct = 23	0.00	0.00	0.00	0.00	0.00	0.00	0.00	0.00	0.00	0.00	XXX
Q9924		E	Epoetin with hct = 24	0.00	0.00	0.00	0.00	0.00	0.00	0.00	0.00	0.00	0.00	XXX
Q9925		E	Epoetin with hct = 25	0.00	0.00	0.00	0.00	0.00	0.00	0.00	0.00	0.00	0.00	XXX
Q9926		E	Epoetin with hct = 26	0.00	0.00	0.00	0.00	0.00	0.00	0.00	0.00	0.00	0.00	XXX
Q9927		E	Epoetin with hct = 27	0.00	0.00	0.00	0.00	0.00	0.00	0.00	0.00	0.00	0.00	XXX
Q9928		E	Epoetin with hct = 28	0.00	0.00	0.00	0.00	0.00	0.00	0.00	0.00	0.00	0.00	XXX
Q9929		E	Epoetin with hct = 29	0.00	0.00	0.00	0.00	0.00	0.00	0.00	0.00	0.00	0.00	XXX

[1] CPT codes and descriptions only are copyright 2000 American Medical Association. All Rights Reserved. Applicable FARS/DFARS Apply.
[2] Copyright 1994 American Dental Association. All rights reserved.
[3] + Indicates RVUs are not used for Medicare payment.
[4] PE RVUs = Practice Expense Relative Value Units.

ADDENDUM B.—RELATIVE VALUE UNITS (RVU'S) AND RELATED INFORMATION—Continued

CPT[1]/ HCPCS[2]	MOD	Status	Description	Physician Work RVUs[3]	Fully Implemented Non-Facility PE RVUs	Year 2001 Transitional Non-Facility PE RVUs	Fully Implemented Facility PE RVUs	Year 2001 Transitional Facility PE RVUs	Mal-Practice RVUs	Fully Implemented Non-Facility Total	Year 2001 Transitional Non-Facility Total	Fully Implemented Facility Total	Year 2001 Transitional Facility Total	Global
Q9930		E	Epoetin with hct = 30	0.00	0.00	0.00	0.00	0.00	0.00	0.00	0.00	0.00	0.00	XXX
Q9931		E	Epoetin with hct = 31	0.00	0.00	0.00	0.00	0.00	0.00	0.00	0.00	0.00	0.00	XXX
Q9932		E	Epoetin with hct = 32	0.00	0.00	0.00	0.00	0.00	0.00	0.00	0.00	0.00	0.00	XXX
Q9933		E	Epoetin with hct = 33	0.00	0.00	0.00	0.00	0.00	0.00	0.00	0.00	0.00	0.00	XXX
Q9934		E	Epoetin with hct = 34	0.00	0.00	0.00	0.00	0.00	0.00	0.00	0.00	0.00	0.00	XXX
Q9935		E	Epoetin with hct = 35	0.00	0.00	0.00	0.00	0.00	0.00	0.00	0.00	0.00	0.00	XXX
Q9936		E	Epoetin with hct = 36	0.00	0.00	0.00	0.00	0.00	0.00	0.00	0.00	0.00	0.00	XXX
Q9937		E	Epoetin with hct = 37	0.00	0.00	0.00	0.00	0.00	0.00	0.00	0.00	0.00	0.00	XXX
Q9938		E	Epoetin with hct = 38	0.00	0.00	0.00	0.00	0.00	0.00	0.00	0.00	0.00	0.00	XXX
Q9939		E	Epoetin with hct = 39	0.00	0.00	0.00	0.00	0.00	0.00	0.00	0.00	0.00	0.00	XXX
Q9940		E	Epoetin with hct >= 40	0.00	0.00	0.00	0.00	0.00	0.00	0.00	0.00	0.00	0.00	XXX
R0070		C	Transport portable x-ray	0.00	0.00	0.00	0.00	0.00	0.00	0.00	0.00	0.00	0.00	XXX
R0075		C	Transport port x-ray multipl	0.00	0.00	0.00	0.00	0.00	0.00	0.00	0.00	0.00	0.00	XXX
R0076		B	Transport portable EKG	0.00	0.00	0.00	0.00	0.00	0.00	0.00	0.00	0.00	0.00	XXX
S0009		I	Injection, butorphanol tartr	0.00	0.00	0.00	0.00	0.00	0.00	0.00	0.00	0.00	0.00	XXX
S0010		D	Injection, somatrem, 5 mg	0.00	0.00	0.00	0.00	0.00	0.00	0.00	0.00	0.00	0.00	XXX
S0011		D	Injection, somatropin, 5 mg	0.00	0.00	0.00	0.00	0.00	0.00	0.00	0.00	0.00	0.00	XXX
S0012		I	Butorphanol tartrate, nasal	0.00	0.00	0.00	0.00	0.00	0.00	0.00	0.00	0.00	0.00	XXX
S0014		I	Tacrine hydrochloride, 10 mg	0.00	0.00	0.00	0.00	0.00	0.00	0.00	0.00	0.00	0.00	XXX
S0016		I	Injection, amikacin sulfate	0.00	0.00	0.00	0.00	0.00	0.00	0.00	0.00	0.00	0.00	XXX
S0017		I	Injection, aminocaproic acid	0.00	0.00	0.00	0.00	0.00	0.00	0.00	0.00	0.00	0.00	XXX
S0020		I	Injection, bupivicaine hydro	0.00	0.00	0.00	0.00	0.00	0.00	0.00	0.00	0.00	0.00	XXX
S0021		I	Injection, cefoperazone sod	0.00	0.00	0.00	0.00	0.00	0.00	0.00	0.00	0.00	0.00	XXX
S0023		I	Injection, cimetidine hydroc	0.00	0.00	0.00	0.00	0.00	0.00	0.00	0.00	0.00	0.00	XXX
S0024		I	Injection, ciprofloxacin	0.00	0.00	0.00	0.00	0.00	0.00	0.00	0.00	0.00	0.00	XXX
S0028		I	Injection, famotidine, 20 mg	0.00	0.00	0.00	0.00	0.00	0.00	0.00	0.00	0.00	0.00	XXX
S0029		I	Injection, fluconazole	0.00	0.00	0.00	0.00	0.00	0.00	0.00	0.00	0.00	0.00	XXX
S0030		I	Injection, metronidazole	0.00	0.00	0.00	0.00	0.00	0.00	0.00	0.00	0.00	0.00	XXX
S0032		I	Injection, nafcillin sodium	0.00	0.00	0.00	0.00	0.00	0.00	0.00	0.00	0.00	0.00	XXX
S0034		I	Injection, ofloxacin, 400 mg	0.00	0.00	0.00	0.00	0.00	0.00	0.00	0.00	0.00	0.00	XXX
S0039		I	Injection, sulfamethoxazole	0.00	0.00	0.00	0.00	0.00	0.00	0.00	0.00	0.00	0.00	XXX
S0040		I	Injection, ticarcillin disod	0.00	0.00	0.00	0.00	0.00	0.00	0.00	0.00	0.00	0.00	XXX
S0071		I	Injection, acyclovir sodium	0.00	0.00	0.00	0.00	0.00	0.00	0.00	0.00	0.00	0.00	XXX
S0072		I	Injection, amikacin sulfate	0.00	0.00	0.00	0.00	0.00	0.00	0.00	0.00	0.00	0.00	XXX
S0073		I	Injection, aztreonam, 500 mg	0.00	0.00	0.00	0.00	0.00	0.00	0.00	0.00	0.00	0.00	XXX
S0074		I	Injection, cefotetan disodiu	0.00	0.00	0.00	0.00	0.00	0.00	0.00	0.00	0.00	0.00	XXX
S0077		I	Injection, clindamycin phosp	0.00	0.00	0.00	0.00	0.00	0.00	0.00	0.00	0.00	0.00	XXX
S0078		I	Injection, fosphenytoin sodi	0.00	0.00	0.00	0.00	0.00	0.00	0.00	0.00	0.00	0.00	XXX
S0080		I	Injection, pentamidine iseth	0.00	0.00	0.00	0.00	0.00	0.00	0.00	0.00	0.00	0.00	XXX
S0081		I	Injection, piperacillin sodi	0.00	0.00	0.00	0.00	0.00	0.00	0.00	0.00	0.00	0.00	XXX
S0085		I	injection, gatifloxacin	0.00	0.00	0.00	0.00	0.00	0.00	0.00	0.00	0.00	0.00	XXX
S0086		I	Injection, verteporfin, 15mg	0.00	0.00	0.00	0.00	0.00	0.00	0.00	0.00	0.00	0.00	XXX
S0090		I	Sildenafil citrate, 25 mg	0.00	0.00	0.00	0.00	0.00	0.00	0.00	0.00	0.00	0.00	XXX
S0096		I	Injection, itraconazole, 200	0.00	0.00	0.00	0.00	0.00	0.00	0.00	0.00	0.00	0.00	XXX
S0097		D	Injection, ibutilide fumarat	0.00	0.00	0.00	0.00	0.00	0.00	0.00	0.00	0.00	0.00	XXX
S0098		D	Injection, sodium ferric glu	0.00	0.00	0.00	0.00	0.00	0.00	0.00	0.00	0.00	0.00	XXX
S0156		I	Exemestane, 25 mg	0.00	0.00	0.00	0.00	0.00	0.00	0.00	0.00	0.00	0.00	XXX
S0157		I	Becaplermin gel 1%, 0.5 gm	0.00	0.00	0.00	0.00	0.00	0.00	0.00	0.00	0.00	0.00	XXX
S0220		I	Medical conference by physic	0.00	0.00	0.00	0.00	0.00	0.00	0.00	0.00	0.00	0.00	XXX
S0221		I	Medical conference, 60 min	0.00	0.00	0.00	0.00	0.00	0.00	0.00	0.00	0.00	0.00	XXX
S0601		I	Screening proctoscopy	0.00	0.00	0.00	0.00	0.00	0.00	0.00	0.00	0.00	0.00	XXX
S0605		I	Digital rectal examination,	0.00	0.00	0.00	0.00	0.00	0.00	0.00	0.00	0.00	0.00	XXX
S0610		I	Annual gynecological examina	0.00	0.00	0.00	0.00	0.00	0.00	0.00	0.00	0.00	0.00	XXX
S0612		I	Annual gynecological examina	0.00	0.00	0.00	0.00	0.00	0.00	0.00	0.00	0.00	0.00	XXX
S0620		I	Routine ophthalmological exa	0.00	0.00	0.00	0.00	0.00	0.00	0.00	0.00	0.00	0.00	XXX
S0621		I	Routine ophthalmological exa	0.00	0.00	0.00	0.00	0.00	0.00	0.00	0.00	0.00	0.00	XXX
S0630		I	Removal of sutures	0.00	0.00	0.00	0.00	0.00	0.00	0.00	0.00	0.00	0.00	XXX
S0800		I	Laser in situ keratomileusis	0.00	0.00	0.00	0.00	0.00	0.00	0.00	0.00	0.00	0.00	XXX
S0810		I	Photorefractive keratectomy	0.00	0.00	0.00	0.00	0.00	0.00	0.00	0.00	0.00	0.00	XXX
S0820		I	Computerized corneal topogra	0.00	0.00	0.00	0.00	0.00	0.00	0.00	0.00	0.00	0.00	XXX
S0830		I	Ultrasound pachymetry	0.00	0.00	0.00	0.00	0.00	0.00	0.00	0.00	0.00	0.00	XXX
S1015		I	IV tubing extension set	0.00	0.00	0.00	0.00	0.00	0.00	0.00	0.00	0.00	0.00	XXX
S1016		I	Non-pvc intravenous administ	0.00	0.00	0.00	0.00	0.00	0.00	0.00	0.00	0.00	0.00	XXX
S2050		D	Donor enterectomy, with prep	0.00	0.00	0.00	0.00	0.00	0.00	0.00	0.00	0.00	0.00	XXX
S2052		I	Transplantation of small int	0.00	0.00	0.00	0.00	0.00	0.00	0.00	0.00	0.00	0.00	XXX
S2053		I	Transplantation of small int	0.00	0.00	0.00	0.00	0.00	0.00	0.00	0.00	0.00	0.00	XXX
S2054		I	Transplantation of multivisc	0.00	0.00	0.00	0.00	0.00	0.00	0.00	0.00	0.00	0.00	XXX
S2055		I	Harvesting of donor multivis	0.00	0.00	0.00	0.00	0.00	0.00	0.00	0.00	0.00	0.00	XXX
S2060		I	Lobar lung transplantation	0.00	0.00	0.00	0.00	0.00	0.00	0.00	0.00	0.00	0.00	XXX
S2061		I	Donor lobectomy (lung)	0.00	0.00	0.00	0.00	0.00	0.00	0.00	0.00	0.00	0.00	XXX
S2102		I	Islet cell tissue transplant	0.00	0.00	0.00	0.00	0.00	0.00	0.00	0.00	0.00	0.00	XXX
S2103		I	Adrenal tissue transplant	0.00	0.00	0.00	0.00	0.00	0.00	0.00	0.00	0.00	0.00	XXX
S2109		D	Autologous chondrocyte trans	0.00	0.00	0.00	0.00	0.00	0.00	0.00	0.00	0.00	0.00	XXX
S2120		I	Low density lipoprotein(LDL)	0.00	0.00	0.00	0.00	0.00	0.00	0.00	0.00	0.00	0.00	XXX
S2140		I	Cord blood harvesting	0.00	0.00	0.00	0.00	0.00	0.00	0.00	0.00	0.00	0.00	XXX
S2142		I	Cord blood-derived stem-cell	0.00	0.00	0.00	0.00	0.00	0.00	0.00	0.00	0.00	0.00	XXX
S2180		I	Donor leukocyte infusion	0.00	0.00	0.00	0.00	0.00	0.00	0.00	0.00	0.00	0.00	XXX
S2190		D	Subcutaneous implantation of	0.00	0.00	0.00	0.00	0.00	0.00	0.00	0.00	0.00	0.00	XXX
S2202		I	Echosclerotherapy	0.00	0.00	0.00	0.00	0.00	0.00	0.00	0.00	0.00	0.00	XXX
S2204		D	Transmyocardial laser revasc	0.00	0.00	0.00	0.00	0.00	0.00	0.00	0.00	0.00	0.00	XXX
S2205		I	Minimally invasive direct co	0.00	0.00	0.00	0.00	0.00	0.00	0.00	0.00	0.00	0.00	XXX
S2206		I	Minimally invasive direct co	0.00	0.00	0.00	0.00	0.00	0.00	0.00	0.00	0.00	0.00	XXX
S2207		I	Minimally invasive direct co	0.00	0.00	0.00	0.00	0.00	0.00	0.00	0.00	0.00	0.00	XXX

[1] CPT codes and descriptions only are copyright 2000 American Medical Association. All Rights Reserved. Applicable FARS/DFARS Apply.
[2] Copyright 1994 American Dental Association. All rights reserved.
[3] + Indicates RVUs are not used for Medicare payment.
[4] PE RVUs = Practice Expense Relative Value Units.

ADDENDUM B.—RELATIVE VALUE UNITS (RVU'S) AND RELATED INFORMATION—Continued

CPT[1]/ HCPCS[2]	MOD	Status	Description	Physician Work RVUs[3]	Fully Implemented Non-Facility PE RVUs	Year 2001 Transitional Non-Facility PE RVUs	Fully Implemented Facility PE RVUs	Year 2001 Transitional Facility PE RVUs	Mal-Practice RVUs	Fully Implemented Non-Facility Total	Year 2001 Transitional Non-Facility Total	Fully Implemented Facility Total	Year 2001 Transitional Facility Total	Global
S2208		I	Minimally invasive direct co	0.00	0.00	0.00	0.00	0.00	0.00	0.00	0.00	0.00	0.00	XXX
S2209		I	Minimally invasive direct co	0.00	0.00	0.00	0.00	0.00	0.00	0.00	0.00	0.00	0.00	XXX
S2210		I	Cryosurgical ablation (in si	0.00	0.00	0.00	0.00	0.00	0.00	0.00	0.00	0.00	0.00	XXX
S2220		I	Thrombectomy, coronary	0.00	0.00	0.00	0.00	0.00	0.00	0.00	0.00	0.00	0.00	XXX
S2300		I	Arthroscopy, shoulder, surgi	0.00	0.00	0.00	0.00	0.00	0.00	0.00	0.00	0.00	0.00	XXX
S2340		I	Chemodenervation of abductor	0.00	0.00	0.00	0.00	0.00	0.00	0.00	0.00	0.00	0.00	XXX
S2350		I	Diskectomy, anterior, with d	0.00	0.00	0.00	0.00	0.00	0.00	0.00	0.00	0.00	0.00	XXX
S2351		I	Diskectomy, anterior, with d	0.00	0.00	0.00	0.00	0.00	0.00	0.00	0.00	0.00	0.00	XXX
S2370		I	Intradiscal electrothermal	0.00	0.00	0.00	0.00	0.00	0.00	0.00	0.00	0.00	0.00	XXX
S2371		I	Each additional interspace	0.00	0.00	0.00	0.00	0.00	0.00	0.00	0.00	0.00	0.00	XXX
S3620		X	Newborn metabolic screening	0.00	0.00	0.00	0.00	0.00	0.00	0.00	0.00	0.00	0.00	XXX
S3645		I	HIV-1 antibody testing of or	0.00	0.00	0.00	0.00	0.00	0.00	0.00	0.00	0.00	0.00	XXX
S3650		I	Saliva test, hormone level;	0.00	0.00	0.00	0.00	0.00	0.00	0.00	0.00	0.00	0.00	XXX
S3652		I	Saliva test, hormone level;	0.00	0.00	0.00	0.00	0.00	0.00	0.00	0.00	0.00	0.00	XXX
S3700		I	Bladder tumor-associated	0.00	0.00	0.00	0.00	0.00	0.00	0.00	0.00	0.00	0.00	XXX
S3708		I	Gastrointestinal fat absorpt	0.00	0.00	0.00	0.00	0.00	0.00	0.00	0.00	0.00	0.00	XXX
S3902		I	Ballistocardiogram	0.00	0.00	0.00	0.00	0.00	0.00	0.00	0.00	0.00	0.00	XXX
S3904		I	Masters two step	0.00	0.00	0.00	0.00	0.00	0.00	0.00	0.00	0.00	0.00	XXX
S3906		I	Transfusion, direct, blood	0.00	0.00	0.00	0.00	0.00	0.00	0.00	0.00	0.00	0.00	XXX
S5000		I	Prescription drug, generic	0.00	0.00	0.00	0.00	0.00	0.00	0.00	0.00	0.00	0.00	XXX
S5001		I	Prescription drug,brand name	0.00	0.00	0.00	0.00	0.00	0.00	0.00	0.00	0.00	0.00	XXX
S5002		I	Fat emulsion 10% in 250 ml	0.00	0.00	0.00	0.00	0.00	0.00	0.00	0.00	0.00	0.00	XXX
S5003		I	Fat emulsion 20% in 250 ml	0.00	0.00	0.00	0.00	0.00	0.00	0.00	0.00	0.00	0.00	XXX
S5010		I	5% dextrose and 45% saline	0.00	0.00	0.00	0.00	0.00	0.00	0.00	0.00	0.00	0.00	XXX
S5011		I	5% dextrose in lactated ring	0.00	0.00	0.00	0.00	0.00	0.00	0.00	0.00	0.00	0.00	XXX
S5012		I	5% dextrose with potassium	0.00	0.00	0.00	0.00	0.00	0.00	0.00	0.00	0.00	0.00	XXX
S5013		I	5% dextrose/45%saline,1000ml	0.00	0.00	0.00	0.00	0.00	0.00	0.00	0.00	0.00	0.00	XXX
S5014		I	5% dextrose/45%saline,1500ml	0.00	0.00	0.00	0.00	0.00	0.00	0.00	0.00	0.00	0.00	XXX
S5016		I	Antibiotic admin supplies w/	0.00	0.00	0.00	0.00	0.00	0.00	0.00	0.00	0.00	0.00	XXX
S5017		I	Antibiotic adminsupplies w/o	0.00	0.00	0.00	0.00	0.00	0.00	0.00	0.00	0.00	0.00	XXX
S5018		I	Pain therapy admin supplies	0.00	0.00	0.00	0.00	0.00	0.00	0.00	0.00	0.00	0.00	XXX
S5019		I	Chemotherapy admin supplies	0.00	0.00	0.00	0.00	0.00	0.00	0.00	0.00	0.00	0.00	XXX
S5020		I	Chemotherapy admin supplies	0.00	0.00	0.00	0.00	0.00	0.00	0.00	0.00	0.00	0.00	XXX
S5021		I	Hydration therapy admin supp	0.00	0.00	0.00	0.00	0.00	0.00	0.00	0.00	0.00	0.00	XXX
S5022		I	Growth hormone therapy	0.00	0.00	0.00	0.00	0.00	0.00	0.00	0.00	0.00	0.00	XXX
S5025		I	Infusion pump rental,perdiem	0.00	0.00	0.00	0.00	0.00	0.00	0.00	0.00	0.00	0.00	XXX
S5503		I	Maintenance of implanted vas	0.00	0.00	0.00	0.00	0.00	0.00	0.00	0.00	0.00	0.00	XXX
S8001		I	Radiofrequency stimulation	0.00	0.00	0.00	0.00	0.00	0.00	0.00	0.00	0.00	0.00	XXX
S8035		I	Magnetic source imaging	0.00	0.00	0.00	0.00	0.00	0.00	0.00	0.00	0.00	0.00	XXX
S8040		I	Topographic brain mapping	0.00	0.00	0.00	0.00	0.00	0.00	0.00	0.00	0.00	0.00	XXX
S8048		D	Isolated limb perfusion	0.00	0.00	0.00	0.00	0.00	0.00	0.00	0.00	0.00	0.00	XXX
S8049		I	Intraoperative radiation the	0.00	0.00	0.00	0.00	0.00	0.00	0.00	0.00	0.00	0.00	XXX
S8060		D	Supply of contrast material	0.00	0.00	0.00	0.00	0.00	0.00	0.00	0.00	0.00	0.00	XXX
S8080		I	Scintimammography	0.00	0.00	0.00	0.00	0.00	0.00	0.00	0.00	0.00	0.00	XXX
S8085		I	Fluorine-18 fluorodeoxygluco	0.00	0.00	0.00	0.00	0.00	0.00	0.00	0.00	0.00	0.00	XXX
S8092		I	Electron beam computed tomog	0.00	0.00	0.00	0.00	0.00	0.00	0.00	0.00	0.00	0.00	XXX
S8095		I	Wig (for medically-induced h	0.00	0.00	0.00	0.00	0.00	0.00	0.00	0.00	0.00	0.00	XXX
S8096		I	Portable peak flow meter	0.00	0.00	0.00	0.00	0.00	0.00	0.00	0.00	0.00	0.00	XXX
S8105		I	Oximeter for measuring blood	0.00	0.00	0.00	0.00	0.00	0.00	0.00	0.00	0.00	0.00	XXX
S8110		I	Peak expiratory flow rate (p	0.00	0.00	0.00	0.00	0.00	0.00	0.00	0.00	0.00	0.00	XXX
S8200		I	Chest compression vest	0.00	0.00	0.00	0.00	0.00	0.00	0.00	0.00	0.00	0.00	XXX
S8205		I	Chest compression system gen	0.00	0.00	0.00	0.00	0.00	0.00	0.00	0.00	0.00	0.00	XXX
S8210		I	Mucus trap	0.00	0.00	0.00	0.00	0.00	0.00	0.00	0.00	0.00	0.00	XXX
S8260		I	Oral orthotic for treatment	0.00	0.00	0.00	0.00	0.00	0.00	0.00	0.00	0.00	0.00	XXX
S8300		D	Sacral nerve stimulation tes	0.00	0.00	0.00	0.00	0.00	0.00	0.00	0.00	0.00	0.00	XXX
S8400		I	Incontinence pants, each	0.00	0.00	0.00	0.00	0.00	0.00	0.00	0.00	0.00	0.00	XXX
S8402		I	Diapers, each	0.00	0.00	0.00	0.00	0.00	0.00	0.00	0.00	0.00	0.00	XXX
S8405		I	Incontinence liners, each	0.00	0.00	0.00	0.00	0.00	0.00	0.00	0.00	0.00	0.00	XXX
S8950		I	Complex lymphedema therapy,	0.00	0.00	0.00	0.00	0.00	0.00	0.00	0.00	0.00	0.00	XXX
S8999		I	Resuscitation bag	0.00	0.00	0.00	0.00	0.00	0.00	0.00	0.00	0.00	0.00	XXX
S9001		I	Home uterine monitor with or	0.00	0.00	0.00	0.00	0.00	0.00	0.00	0.00	0.00	0.00	XXX
S9007		I	Ultrafiltration monitor	0.00	0.00	0.00	0.00	0.00	0.00	0.00	0.00	0.00	0.00	XXX
S9015		I	Automated EEG monitoring	0.00	0.00	0.00	0.00	0.00	0.00	0.00	0.00	0.00	0.00	XXX
S9022		I	Digital subtraction angiogra	0.00	0.00	0.00	0.00	0.00	0.00	0.00	0.00	0.00	0.00	XXX
S9023		I	Xenon regional cerebral bloo	0.00	0.00	0.00	0.00	0.00	0.00	0.00	0.00	0.00	0.00	XXX
S9024		I	Paranasal sinus ultrasound	0.00	0.00	0.00	0.00	0.00	0.00	0.00	0.00	0.00	0.00	XXX
S9025		I	Omnicardiogram/cardiointegra	0.00	0.00	0.00	0.00	0.00	0.00	0.00	0.00	0.00	0.00	XXX
S9033		D	Gait analysis	0.00	0.00	0.00	0.00	0.00	0.00	0.00	0.00	0.00	0.00	XXX
S9035		I	Medical equipment or supplie	0.00	0.00	0.00	0.00	0.00	0.00	0.00	0.00	0.00	0.00	XXX
S9055		I	Procuren or other growth fac	0.00	0.00	0.00	0.00	0.00	0.00	0.00	0.00	0.00	0.00	XXX
S9056		I	Coma stimulation per diem	0.00	0.00	0.00	0.00	0.00	0.00	0.00	0.00	0.00	0.00	XXX
S9061		I	Medical supplies and equipme	0.00	0.00	0.00	0.00	0.00	0.00	0.00	0.00	0.00	0.00	XXX
S9075		I	Smoking cessation treatment	0.00	0.00	0.00	0.00	0.00	0.00	0.00	0.00	0.00	0.00	XXX
S9085		I	Meniscal allograft transplan	0.00	0.00	0.00	0.00	0.00	0.00	0.00	0.00	0.00	0.00	XXX
S9088		I	Services provided in urgent	0.00	0.00	0.00	0.00	0.00	0.00	0.00	0.00	0.00	0.00	XXX
S9090		I	Vertebral axial decompressio	0.00	0.00	0.00	0.00	0.00	0.00	0.00	0.00	0.00	0.00	XXX
S9122		I	Home health aide or certifie	0.00	0.00	0.00	0.00	0.00	0.00	0.00	0.00	0.00	0.00	XXX
S9123		I	Nursing care, in the home; b	0.00	0.00	0.00	0.00	0.00	0.00	0.00	0.00	0.00	0.00	XXX
S9124		I	Nursing care, in the home; b	0.00	0.00	0.00	0.00	0.00	0.00	0.00	0.00	0.00	0.00	XXX
S9125		I	Respite care, in the home, p	0.00	0.00	0.00	0.00	0.00	0.00	0.00	0.00	0.00	0.00	XXX
S9126		I	Hospice care, in the home, p	0.00	0.00	0.00	0.00	0.00	0.00	0.00	0.00	0.00	0.00	XXX
S9127		I	Social work visit, in the ho	0.00	0.00	0.00	0.00	0.00	0.00	0.00	0.00	0.00	0.00	XXX
S9128		I	Speech therapy, in the home,	0.00	0.00	0.00	0.00	0.00	0.00	0.00	0.00	0.00	0.00	XXX

[1] CPT codes and descriptions only are copyright 2000 American Medical Association. All Rights Reserved. Applicable FARS/DFARS Apply.
[2] Copyright 1994 American Dental Association. All rights reserved.
[3] + Indicates RVUs are not used for Medicare payment.
[4] PE RVUs = Practice Expense Relative Value Units.

ADDENDUM B.—RELATIVE VALUE UNITS (RVU'S) AND RELATED INFORMATION—Continued

CPT[1]/ HCPCS[2]	MOD	Status	Description	Physician Work RVUs[3]	Fully Implemented Non-Facility PE RVUs	Year 2001 Transitional Non-Facility PE RVUs	Fully Implemented Facility PE RVUs	Year 2001 Transitional Facility PE RVUs	Mal-Practice RVUs	Fully Implemented Non-Facility Total	Year 2001 Transitional Non-Facility Total	Fully Implemented Facility Total	Year 2001 Transitional Facility Total	Global
S9129		I	Occupational therapy, in the	0.00	0.00	0.00	0.00	0.00	0.00	0.00	0.00	0.00	0.00	XXX
S9140		I	Diabetic Management Program,	0.00	0.00	0.00	0.00	0.00	0.00	0.00	0.00	0.00	0.00	XXX
S9141		I	Diabetic Management Program,	0.00	0.00	0.00	0.00	0.00	0.00	0.00	0.00	0.00	0.00	XXX
S9200		I	Nursing services and all nec	0.00	0.00	0.00	0.00	0.00	0.00	0.00	0.00	0.00	0.00	XXX
S9210		I	Nursing services and all nec	0.00	0.00	0.00	0.00	0.00	0.00	0.00	0.00	0.00	0.00	XXX
S9220		I	Nursing services and all nec	0.00	0.00	0.00	0.00	0.00	0.00	0.00	0.00	0.00	0.00	XXX
S9225		I	Nursing services and all nec	0.00	0.00	0.00	0.00	0.00	0.00	0.00	0.00	0.00	0.00	XXX
S9230		I	Nursing services and all nec	0.00	0.00	0.00	0.00	0.00	0.00	0.00	0.00	0.00	0.00	XXX
S9300		I	Nursing services and all nec	0.00	0.00	0.00	0.00	0.00	0.00	0.00	0.00	0.00	0.00	XXX
S9308		I	Nursing services and all nec	0.00	0.00	0.00	0.00	0.00	0.00	0.00	0.00	0.00	0.00	XXX
S9310		I	Nursing services and all nec	0.00	0.00	0.00	0.00	0.00	0.00	0.00	0.00	0.00	0.00	XXX
S9395		I	Nursing services and all nec	0.00	0.00	0.00	0.00	0.00	0.00	0.00	0.00	0.00	0.00	XXX
S9420		I	Nursing services and all nec	0.00	0.00	0.00	0.00	0.00	0.00	0.00	0.00	0.00	0.00	XXX
S9423		I	Nursing services, patient as	0.00	0.00	0.00	0.00	0.00	0.00	0.00	0.00	0.00	0.00	XXX
S9425		I	Nursing services and all nec	0.00	0.00	0.00	0.00	0.00	0.00	0.00	0.00	0.00	0.00	XXX
S9435		I	Medical foods for inborn err	0.00	0.00	0.00	0.00	0.00	0.00	0.00	0.00	0.00	0.00	XXX
S9455		I	Diabetic Management Program,	0.00	0.00	0.00	0.00	0.00	0.00	0.00	0.00	0.00	0.00	XXX
S9460		I	Diabetic Management Program,	0.00	0.00	0.00	0.00	0.00	0.00	0.00	0.00	0.00	0.00	XXX
S9465		I	Diabetic Management Program,	0.00	0.00	0.00	0.00	0.00	0.00	0.00	0.00	0.00	0.00	XXX
S9470		I	Nutritional counseling, diet	0.00	0.00	0.00	0.00	0.00	0.00	0.00	0.00	0.00	0.00	XXX
S9472		I	Cardiac rehabilitation progr	0.00	0.00	0.00	0.00	0.00	0.00	0.00	0.00	0.00	0.00	XXX
S9473		I	Pulmonary rehabilitation pro	0.00	0.00	0.00	0.00	0.00	0.00	0.00	0.00	0.00	0.00	XXX
S9474		I	Enterostomal therapy by a re	0.00	0.00	0.00	0.00	0.00	0.00	0.00	0.00	0.00	0.00	XXX
S9475		I	Ambulatory setting substance	0.00	0.00	0.00	0.00	0.00	0.00	0.00	0.00	0.00	0.00	XXX
S9480		I	Intensive outpatient psychia	0.00	0.00	0.00	0.00	0.00	0.00	0.00	0.00	0.00	0.00	XXX
S9485		I	Crisis intervention mental h	0.00	0.00	0.00	0.00	0.00	0.00	0.00	0.00	0.00	0.00	XXX
S9524		I	Nursing services related to	0.00	0.00	0.00	0.00	0.00	0.00	0.00	0.00	0.00	0.00	XXX
S9526		I	Skilled nursing visits for	0.00	0.00	0.00	0.00	0.00	0.00	0.00	0.00	0.00	0.00	XXX
S9527		I	Insertion of a peripherally	0.00	0.00	0.00	0.00	0.00	0.00	0.00	0.00	0.00	0.00	XXX
S9528		I	Insertion of midline central	0.00	0.00	0.00	0.00	0.00	0.00	0.00	0.00	0.00	0.00	XXX
S9533		I	Pain management, intravenous	0.00	0.00	0.00	0.00	0.00	0.00	0.00	0.00	0.00	0.00	XXX
S9535		I	Administration of hematopoie	0.00	0.00	0.00	0.00	0.00	0.00	0.00	0.00	0.00	0.00	XXX
S9539		I	Administration of antibiotic	0.00	0.00	0.00	0.00	0.00	0.00	0.00	0.00	0.00	0.00	XXX
S9543		I	Administration of medication	0.00	0.00	0.00	0.00	0.00	0.00	0.00	0.00	0.00	0.00	XXX
S9545		I	Administration of immune glo	0.00	0.00	0.00	0.00	0.00	0.00	0.00	0.00	0.00	0.00	XXX
S9550		I	Home IV therapy, hydration	0.00	0.00	0.00	0.00	0.00	0.00	0.00	0.00	0.00	0.00	XXX
S9555		I	Additional home infusion	0.00	0.00	0.00	0.00	0.00	0.00	0.00	0.00	0.00	0.00	XXX
S9990		I	Services provided as part of	0.00	0.00	0.00	0.00	0.00	0.00	0.00	0.00	0.00	0.00	XXX
S9991		I	Services provided as part of	0.00	0.00	0.00	0.00	0.00	0.00	0.00	0.00	0.00	0.00	XXX
S9992		I	Transportation costs to and	0.00	0.00	0.00	0.00	0.00	0.00	0.00	0.00	0.00	0.00	XXX
S9994		I	Lodging costs (e.g. hotel ch	0.00	0.00	0.00	0.00	0.00	0.00	0.00	0.00	0.00	0.00	XXX
S9996		I	Meals for clinical trial par	0.00	0.00	0.00	0.00	0.00	0.00	0.00	0.00	0.00	0.00	XXX
S9999		I	Sales tax	0.00	0.00	0.00	0.00	0.00	0.00	0.00	0.00	0.00	0.00	XXX
V2020		X	Vision svcs frames purchases	0.00	0.00	0.00	0.00	0.00	0.00	0.00	0.00	0.00	0.00	XXX
V2025		N	Eyeglasses delux frames	0.00	0.00	0.00	0.00	0.00	0.00	0.00	0.00	0.00	0.00	XXX
V2100		X	Lens spher single plano 4.00	0.00	0.00	0.00	0.00	0.00	0.00	0.00	0.00	0.00	0.00	XXX
V2101		X	Single visn sphere 4.12-7.00	0.00	0.00	0.00	0.00	0.00	0.00	0.00	0.00	0.00	0.00	XXX
V2102		X	Singl visn sphere 7.12-20.00	0.00	0.00	0.00	0.00	0.00	0.00	0.00	0.00	0.00	0.00	XXX
V2103		X	Spherocylindr 4.00d/12-2.00d	0.00	0.00	0.00	0.00	0.00	0.00	0.00	0.00	0.00	0.00	XXX
V2104		X	Spherocylindr 4.00d/2.12-4d	0.00	0.00	0.00	0.00	0.00	0.00	0.00	0.00	0.00	0.00	XXX
V2105		X	Spherocylinder 4.00d/4.25-6d	0.00	0.00	0.00	0.00	0.00	0.00	0.00	0.00	0.00	0.00	XXX
V2106		X	Spherocylinder 4.00d/>6.00d	0.00	0.00	0.00	0.00	0.00	0.00	0.00	0.00	0.00	0.00	XXX
V2107		X	Spherocylinder 4.25d/12-2d	0.00	0.00	0.00	0.00	0.00	0.00	0.00	0.00	0.00	0.00	XXX
V2108		X	Spherocylinder 4.25d/2.12-4d	0.00	0.00	0.00	0.00	0.00	0.00	0.00	0.00	0.00	0.00	XXX
V2109		X	Spherocylinder 4.25d/4.25-6d	0.00	0.00	0.00	0.00	0.00	0.00	0.00	0.00	0.00	0.00	XXX
V2110		X	Spherocylinder 4.25d/over 6d	0.00	0.00	0.00	0.00	0.00	0.00	0.00	0.00	0.00	0.00	XXX
V2111		X	Spherocylindr 7.25d/.25-2.25	0.00	0.00	0.00	0.00	0.00	0.00	0.00	0.00	0.00	0.00	XXX
V2112		X	Spherocylindr 7.25d/2.25-4d	0.00	0.00	0.00	0.00	0.00	0.00	0.00	0.00	0.00	0.00	XXX
V2113		X	Spherocylindr 7.25d/4.25-6d	0.00	0.00	0.00	0.00	0.00	0.00	0.00	0.00	0.00	0.00	XXX
V2114		X	Spherocylinder over 12.00d	0.00	0.00	0.00	0.00	0.00	0.00	0.00	0.00	0.00	0.00	XXX
V2115		X	Lens lenticular bifocal	0.00	0.00	0.00	0.00	0.00	0.00	0.00	0.00	0.00	0.00	XXX
V2116		X	Nonaspheric lens bifocal	0.00	0.00	0.00	0.00	0.00	0.00	0.00	0.00	0.00	0.00	XXX
V2117		X	Aspheric lens bifocal	0.00	0.00	0.00	0.00	0.00	0.00	0.00	0.00	0.00	0.00	XXX
V2118		X	Lens aniseikonic single	0.00	0.00	0.00	0.00	0.00	0.00	0.00	0.00	0.00	0.00	XXX
V2199		X	Lens single vision not oth c	0.00	0.00	0.00	0.00	0.00	0.00	0.00	0.00	0.00	0.00	XXX
V2200		X	Lens spher bifoc plano 4.00d	0.00	0.00	0.00	0.00	0.00	0.00	0.00	0.00	0.00	0.00	XXX
V2201		X	Lens sphere bifocal 4.12-7.0	0.00	0.00	0.00	0.00	0.00	0.00	0.00	0.00	0.00	0.00	XXX
V2202		X	Lens sphere bifocal 7.12-20.	0.00	0.00	0.00	0.00	0.00	0.00	0.00	0.00	0.00	0.00	XXX
V2203		X	Lens sphcyl bifocal 4.00d/.1	0.00	0.00	0.00	0.00	0.00	0.00	0.00	0.00	0.00	0.00	XXX
V2204		X	Lens sphcy bifocal 4.00d/2.1	0.00	0.00	0.00	0.00	0.00	0.00	0.00	0.00	0.00	0.00	XXX
V2205		X	Lens sphcy bifocal 4.00d/4.2	0.00	0.00	0.00	0.00	0.00	0.00	0.00	0.00	0.00	0.00	XXX
V2206		X	Lens sphcy bifocal 4.00d/ove	0.00	0.00	0.00	0.00	0.00	0.00	0.00	0.00	0.00	0.00	XXX
V2207		X	Lens sphcy bifocal 4.25-7d/.	0.00	0.00	0.00	0.00	0.00	0.00	0.00	0.00	0.00	0.00	XXX
V2208		X	Lens sphcy bifocal 4.25-7/2.	0.00	0.00	0.00	0.00	0.00	0.00	0.00	0.00	0.00	0.00	XXX
V2209		X	Lens sphcy bifocal 4.25-7/4.	0.00	0.00	0.00	0.00	0.00	0.00	0.00	0.00	0.00	0.00	XXX
V2210		X	Lens sphcy bifocal 4.25-7/ov	0.00	0.00	0.00	0.00	0.00	0.00	0.00	0.00	0.00	0.00	XXX
V2211		X	Lens sphcy bifo 7.25-12/.25-	0.00	0.00	0.00	0.00	0.00	0.00	0.00	0.00	0.00	0.00	XXX
V2212		X	Lens sphcyl bifo 7.25-12/2.2	0.00	0.00	0.00	0.00	0.00	0.00	0.00	0.00	0.00	0.00	XXX
V2213		X	Lens sphcyl bifo 7.25-12/4.2	0.00	0.00	0.00	0.00	0.00	0.00	0.00	0.00	0.00	0.00	XXX
V2214		X	Lens sphcyl bifocal over 12.	0.00	0.00	0.00	0.00	0.00	0.00	0.00	0.00	0.00	0.00	XXX
V2215		X	Lens lenticular bifocal	0.00	0.00	0.00	0.00	0.00	0.00	0.00	0.00	0.00	0.00	XXX
V2216		X	Lens lenticular nonaspheric	0.00	0.00	0.00	0.00	0.00	0.00	0.00	0.00	0.00	0.00	XXX
V2217		X	Lens lenticular aspheric bif	0.00	0.00	0.00	0.00	0.00	0.00	0.00	0.00	0.00	0.00	XXX

[1] CPT codes and descriptions only are copyright 2000 American Medical Association. All Rights Reserved. Applicable FARS/DFARS Apply.
[2] Copyright 1994 American Dental Association. All rights reserved.
[3] + Indicates RVUs are not used for Medicare payment.
[4] PE RVUs = Practice Expense Relative Value Units.

ADDENDUM B.—RELATIVE VALUE UNITS (RVU'S) AND RELATED INFORMATION—Continued

CPT[1]/ HCPCS[2]	MOD	Status	Description	Physician Work RVUs[3]	Fully Implemented Non-Facility PE RVUs	Year 2001 Transitional Non-Facility PE RVUs	Fully Implemented Facility PE RVUs	Year 2001 Transitional Facility PE RVUs	Mal-Practice RVUs	Fully Implemented Non-Facility Total	Year 2001 Transitional Non-Facility Total	Fully Implemented Facility Total	Year 2001 Transitional Facility Total	Global
V2218		X	Lens aniseikonic bifocal	0.00	0.00	0.00	0.00	0.00	0.00	0.00	0.00	0.00	0.00	XXX
V2219		X	Lens bifocal seg width over	0.00	0.00	0.00	0.00	0.00	0.00	0.00	0.00	0.00	0.00	XXX
V2220		X	Lens bifocal add over 3.25d	0.00	0.00	0.00	0.00	0.00	0.00	0.00	0.00	0.00	0.00	XXX
V2299		X	Lens bifocal speciality	0.00	0.00	0.00	0.00	0.00	0.00	0.00	0.00	0.00	0.00	XXX
V2300		X	Lens sphere trifocal 4.00d	0.00	0.00	0.00	0.00	0.00	0.00	0.00	0.00	0.00	0.00	XXX
V2301		X	Lens sphere trifocal 4.12-7.	0.00	0.00	0.00	0.00	0.00	0.00	0.00	0.00	0.00	0.00	XXX
V2302		X	Lens sphere trifocal 7.12-20	0.00	0.00	0.00	0.00	0.00	0.00	0.00	0.00	0.00	0.00	XXX
V2303		X	Lens sphcy trifocal 4.0/.12-	0.00	0.00	0.00	0.00	0.00	0.00	0.00	0.00	0.00	0.00	XXX
V2304		X	Lens sphcy trifocal 4.0/2.25	0.00	0.00	0.00	0.00	0.00	0.00	0.00	0.00	0.00	0.00	XXX
V2305		X	Lens sphcy trifocal 4.0/4.25	0.00	0.00	0.00	0.00	0.00	0.00	0.00	0.00	0.00	0.00	XXX
V2306		X	Lens sphcyl trifocal 4.00/>6	0.00	0.00	0.00	0.00	0.00	0.00	0.00	0.00	0.00	0.00	XXX
V2307		X	Lens sphcy trifocal 4.25-7/.	0.00	0.00	0.00	0.00	0.00	0.00	0.00	0.00	0.00	0.00	XXX
V2308		X	Lens sphc trifocal 4.25-7/2.	0.00	0.00	0.00	0.00	0.00	0.00	0.00	0.00	0.00	0.00	XXX
V2309		X	Lens sphc trifocal 4.25-7/4.	0.00	0.00	0.00	0.00	0.00	0.00	0.00	0.00	0.00	0.00	XXX
V2310		X	Lens sphc trifocal 4.25-7/>6	0.00	0.00	0.00	0.00	0.00	0.00	0.00	0.00	0.00	0.00	XXX
V2311		X	Lens sphc trifo 7.25-12/.25-	0.00	0.00	0.00	0.00	0.00	0.00	0.00	0.00	0.00	0.00	XXX
V2312		X	Lens sphc trifo 7.25-12/2.25	0.00	0.00	0.00	0.00	0.00	0.00	0.00	0.00	0.00	0.00	XXX
V2313		X	Lens sphc trifo 7.25-12/4.25	0.00	0.00	0.00	0.00	0.00	0.00	0.00	0.00	0.00	0.00	XXX
V2314		X	Lens sphcyl trifocal over 12	0.00	0.00	0.00	0.00	0.00	0.00	0.00	0.00	0.00	0.00	XXX
V2315		X	Lens lenticular trifocal	0.00	0.00	0.00	0.00	0.00	0.00	0.00	0.00	0.00	0.00	XXX
V2316		X	Lens lenticular nonaspheric	0.00	0.00	0.00	0.00	0.00	0.00	0.00	0.00	0.00	0.00	XXX
V2317		X	Lens lenticular aspheric tri	0.00	0.00	0.00	0.00	0.00	0.00	0.00	0.00	0.00	0.00	XXX
V2318		X	Lens aniseikonic trifocal	0.00	0.00	0.00	0.00	0.00	0.00	0.00	0.00	0.00	0.00	XXX
V2319		X	Lens trifocal seg width > 28	0.00	0.00	0.00	0.00	0.00	0.00	0.00	0.00	0.00	0.00	XXX
V2320		X	Lens trifocal add over 3.25d	0.00	0.00	0.00	0.00	0.00	0.00	0.00	0.00	0.00	0.00	XXX
V2399		X	Lens trifocal speciality	0.00	0.00	0.00	0.00	0.00	0.00	0.00	0.00	0.00	0.00	XXX
V2410		X	Lens variab asphericity sing	0.00	0.00	0.00	0.00	0.00	0.00	0.00	0.00	0.00	0.00	XXX
V2430		X	Lens variable asphericity bi	0.00	0.00	0.00	0.00	0.00	0.00	0.00	0.00	0.00	0.00	XXX
V2499		X	Variable asphericity lens	0.00	0.00	0.00	0.00	0.00	0.00	0.00	0.00	0.00	0.00	XXX
V2500		X	Contact lens pmma spherical	0.00	0.00	0.00	0.00	0.00	0.00	0.00	0.00	0.00	0.00	XXX
V2501		X	Cntct lens pmma-toric/prism	0.00	0.00	0.00	0.00	0.00	0.00	0.00	0.00	0.00	0.00	XXX
V2502		X	Contact lens pmma bifocal	0.00	0.00	0.00	0.00	0.00	0.00	0.00	0.00	0.00	0.00	XXX
V2503		X	Cntct lens pmma color vision	0.00	0.00	0.00	0.00	0.00	0.00	0.00	0.00	0.00	0.00	XXX
V2510		X	Cntct gas permeable sphericl	0.00	0.00	0.00	0.00	0.00	0.00	0.00	0.00	0.00	0.00	XXX
V2511		X	Cntct toric prism ballast	0.00	0.00	0.00	0.00	0.00	0.00	0.00	0.00	0.00	0.00	XXX
V2512		X	Cntct lens gas permbl bifocl	0.00	0.00	0.00	0.00	0.00	0.00	0.00	0.00	0.00	0.00	XXX
V2513		X	Contact lens extended wear	0.00	0.00	0.00	0.00	0.00	0.00	0.00	0.00	0.00	0.00	XXX
V2520		P	Contact lens hydrophilic	0.00	0.00	0.00	0.00	0.00	0.00	0.00	0.00	0.00	0.00	XXX
V2521		X	Cntct lens hydrophilic toric	0.00	0.00	0.00	0.00	0.00	0.00	0.00	0.00	0.00	0.00	XXX
V2522		X	Cntct lens hydrophil bifocl	0.00	0.00	0.00	0.00	0.00	0.00	0.00	0.00	0.00	0.00	XXX
V2523		X	Cntct lens hydrophil extend	0.00	0.00	0.00	0.00	0.00	0.00	0.00	0.00	0.00	0.00	XXX
V2530		X	Contact lens gas impermeable	0.00	0.00	0.00	0.00	0.00	0.00	0.00	0.00	0.00	0.00	XXX
V2531		X	Contact lens gas permeable	0.00	0.00	0.00	0.00	0.00	0.00	0.00	0.00	0.00	0.00	XXX
V2599		X	Contact lens/es other type	0.00	0.00	0.00	0.00	0.00	0.00	0.00	0.00	0.00	0.00	XXX
V2600		X	Hand held low vision aids	0.00	0.00	0.00	0.00	0.00	0.00	0.00	0.00	0.00	0.00	XXX
V2610		X	Single lens spectacle mount	0.00	0.00	0.00	0.00	0.00	0.00	0.00	0.00	0.00	0.00	XXX
V2615		X	Telescop/othr compound lens	0.00	0.00	0.00	0.00	0.00	0.00	0.00	0.00	0.00	0.00	XXX
V2623		X	Plastic eye prosth custom	0.00	0.00	0.00	0.00	0.00	0.00	0.00	0.00	0.00	0.00	XXX
V2624		X	Polishing artifical eye	0.00	0.00	0.00	0.00	0.00	0.00	0.00	0.00	0.00	0.00	XXX
V2625		X	Enlargemnt of eye prosthesis	0.00	0.00	0.00	0.00	0.00	0.00	0.00	0.00	0.00	0.00	XXX
V2626		X	Reduction of eye prosthesis	0.00	0.00	0.00	0.00	0.00	0.00	0.00	0.00	0.00	0.00	XXX
V2627		X	Scleral cover shell	0.00	0.00	0.00	0.00	0.00	0.00	0.00	0.00	0.00	0.00	XXX
V2628		X	Fabrication & fitting	0.00	0.00	0.00	0.00	0.00	0.00	0.00	0.00	0.00	0.00	XXX
V2629		X	Prosthetic eye other type	0.00	0.00	0.00	0.00	0.00	0.00	0.00	0.00	0.00	0.00	XXX
V2630		X	Anter chamber intraocul lens	0.00	0.00	0.00	0.00	0.00	0.00	0.00	0.00	0.00	0.00	XXX
V2631		X	Iris support intraoclr lens	0.00	0.00	0.00	0.00	0.00	0.00	0.00	0.00	0.00	0.00	XXX
V2632		X	Post chmbr intraocular lens	0.00	0.00	0.00	0.00	0.00	0.00	0.00	0.00	0.00	0.00	XXX
V2700		X	Balance lens	0.00	0.00	0.00	0.00	0.00	0.00	0.00	0.00	0.00	0.00	XXX
V2710		X	Glass/plastic slab off prism	0.00	0.00	0.00	0.00	0.00	0.00	0.00	0.00	0.00	0.00	XXX
V2715		X	Prism lens/es	0.00	0.00	0.00	0.00	0.00	0.00	0.00	0.00	0.00	0.00	XXX
V2718		X	Fresnell prism press-on lens	0.00	0.00	0.00	0.00	0.00	0.00	0.00	0.00	0.00	0.00	XXX
V2730		X	Special base curve	0.00	0.00	0.00	0.00	0.00	0.00	0.00	0.00	0.00	0.00	XXX
V2740		X	Rose tint plastic	0.00	0.00	0.00	0.00	0.00	0.00	0.00	0.00	0.00	0.00	XXX
V2741		X	Non-rose tint plastic	0.00	0.00	0.00	0.00	0.00	0.00	0.00	0.00	0.00	0.00	XXX
V2742		X	Rose tint glass	0.00	0.00	0.00	0.00	0.00	0.00	0.00	0.00	0.00	0.00	XXX
V2743		X	Non-rose tint glass	0.00	0.00	0.00	0.00	0.00	0.00	0.00	0.00	0.00	0.00	XXX
V2744		X	Tint photochromatic lens/es	0.00	0.00	0.00	0.00	0.00	0.00	0.00	0.00	0.00	0.00	XXX
V2750		X	Anti-reflective coating	0.00	0.00	0.00	0.00	0.00	0.00	0.00	0.00	0.00	0.00	XXX
V2755		X	UV lens/es	0.00	0.00	0.00	0.00	0.00	0.00	0.00	0.00	0.00	0.00	XXX
V2760		X	Scratch resistant coating	0.00	0.00	0.00	0.00	0.00	0.00	0.00	0.00	0.00	0.00	XXX
V2770		X	Occluder lens/es	0.00	0.00	0.00	0.00	0.00	0.00	0.00	0.00	0.00	0.00	XXX
V2780		X	Oversize lens/es	0.00	0.00	0.00	0.00	0.00	0.00	0.00	0.00	0.00	0.00	XXX
V2781		X	Progressive lens per lens	0.00	0.00	0.00	0.00	0.00	0.00	0.00	0.00	0.00	0.00	XXX
V2785		X	Corneal tissue processing	0.00	0.00	0.00	0.00	0.00	0.00	0.00	0.00	0.00	0.00	XXX
V2790		X	Amniotic membrane	0.00	0.00	0.00	0.00	0.00	0.00	0.00	0.00	0.00	0.00	XXX
V2799		X	Miscellaneous vision service	0.00	0.00	0.00	0.00	0.00	0.00	0.00	0.00	0.00	0.00	XXX
V5008		N	Hearing screening	0.00	0.00	0.00	0.00	0.00	0.00	0.00	0.00	0.00	0.00	XXX
V5010		N	Assessment for hearing aid	0.00	0.00	0.00	0.00	0.00	0.00	0.00	0.00	0.00	0.00	XXX
V5011		N	Hearing aid fitting/checking	0.00	0.00	0.00	0.00	0.00	0.00	0.00	0.00	0.00	0.00	XXX
V5014		N	Hearing aid repair/modifying	0.00	0.00	0.00	0.00	0.00	0.00	0.00	0.00	0.00	0.00	XXX
V5020		N	Conformity evaluation	0.00	0.00	0.00	0.00	0.00	0.00	0.00	0.00	0.00	0.00	XXX
V5030		N	Body-worn hearing aid air	0.00	0.00	0.00	0.00	0.00	0.00	0.00	0.00	0.00	0.00	XXX
V5040		N	Body-worn hearing aid bone	0.00	0.00	0.00	0.00	0.00	0.00	0.00	0.00	0.00	0.00	XXX

[1] CPT codes and descriptions only are copyright 2000 American Medical Association. All Rights Reserved. Applicable FARS/DFARS Apply.
[2] Copyright 1994 American Dental Association. All rights reserved.
[3] + Indicates RVUs are not used for Medicare payment.
[4] PE RVUs = Practice Expense Relative Value Units.

ADDENDUM B.—RELATIVE VALUE UNITS (RVU'S) AND RELATED INFORMATION—Continued

CPT[1]/ HCPCS[2]	MOD	Status	Description	Physician Work RVUs[3]	Fully Implemented Non-Facility PE RVUs	Year 2001 Transitional Non-Facility PE RVUs	Fully Implemented Facility PE RVUs	Year 2001 Transitional Facility PE RVUs	Mal-Practice RVUs	Fully Implemented Non-Facility Total	Year 2001 Transitional Non-Facility Total	Fully Implemented Facility Total	Year 2001 Transitional Facility Total	Global
V5050		N	Hearing aid monaural in ear	0.00	0.00	0.00	0.00	0.00	0.00	0.00	0.00	0.00	0.00	XXX
V5060		N	Behind ear hearing aid	0.00	0.00	0.00	0.00	0.00	0.00	0.00	0.00	0.00	0.00	XXX
V5070		N	Glasses air conduction	0.00	0.00	0.00	0.00	0.00	0.00	0.00	0.00	0.00	0.00	XXX
V5080		N	Glasses bone conduction	0.00	0.00	0.00	0.00	0.00	0.00	0.00	0.00	0.00	0.00	XXX
V5090		N	Hearing aid dispensing fee	0.00	0.00	0.00	0.00	0.00	0.00	0.00	0.00	0.00	0.00	XXX
V5100		N	Body-worn bilat hearing aid	0.00	0.00	0.00	0.00	0.00	0.00	0.00	0.00	0.00	0.00	XXX
V5110		N	Hearing aid dispensing fee	0.00	0.00	0.00	0.00	0.00	0.00	0.00	0.00	0.00	0.00	XXX
V5120		N	Body-worn binaur hearing aid	0.00	0.00	0.00	0.00	0.00	0.00	0.00	0.00	0.00	0.00	XXX
V5130		N	In ear binaural hearing aid	0.00	0.00	0.00	0.00	0.00	0.00	0.00	0.00	0.00	0.00	XXX
V5140		N	Behind ear binaur hearing ai	0.00	0.00	0.00	0.00	0.00	0.00	0.00	0.00	0.00	0.00	XXX
V5150		N	Glasses binaural hearing aid	0.00	0.00	0.00	0.00	0.00	0.00	0.00	0.00	0.00	0.00	XXX
V5160		N	Dispensing fee binaural	0.00	0.00	0.00	0.00	0.00	0.00	0.00	0.00	0.00	0.00	XXX
V5170		N	Within ear cros hearing aid	0.00	0.00	0.00	0.00	0.00	0.00	0.00	0.00	0.00	0.00	XXX
V5180		N	Behind ear cros hearing aid	0.00	0.00	0.00	0.00	0.00	0.00	0.00	0.00	0.00	0.00	XXX
V5190		N	Glasses cros hearing aid	0.00	0.00	0.00	0.00	0.00	0.00	0.00	0.00	0.00	0.00	XXX
V5200		N	Cros hearing aid dispens fee	0.00	0.00	0.00	0.00	0.00	0.00	0.00	0.00	0.00	0.00	XXX
V5210		N	In ear bicros hearing aid	0.00	0.00	0.00	0.00	0.00	0.00	0.00	0.00	0.00	0.00	XXX
V5220		N	Behind ear bicros hearing ai	0.00	0.00	0.00	0.00	0.00	0.00	0.00	0.00	0.00	0.00	XXX
V5230		N	Glasses bicros hearing aid	0.00	0.00	0.00	0.00	0.00	0.00	0.00	0.00	0.00	0.00	XXX
V5240		N	Dispensing fee bicros	0.00	0.00	0.00	0.00	0.00	0.00	0.00	0.00	0.00	0.00	XXX
V5299		R	Hearing service	0.00	0.00	0.00	0.00	0.00	0.00	0.00	0.00	0.00	0.00	XXX
V5336		N	Repair communication device	0.00	0.00	0.00	0.00	0.00	0.00	0.00	0.00	0.00	0.00	XXX
V5362		R	Speech screening	0.00	0.00	0.00	0.00	0.00	0.00	0.00	0.00	0.00	0.00	XXX
V5363		R	Language screening	0.00	0.00	0.00	0.00	0.00	0.00	0.00	0.00	0.00	0.00	XXX
V5364		R	Dysphagia screening	0.00	0.00	0.00	0.00	0.00	0.00	0.00	0.00	0.00	0.00	XXX

[1] CPT codes and descriptions only are copyright 2000 American Medical Association. All Rights Reserved. Applicable FARS/DFARS Apply.
[2] Copyright 1994 American Dental Association. All rights reserved.
[3] + Indicates RVUs are not used for Medicare payment.
[4] PE RVUs = Practice Expense Relative Value Units.

ADDENDUM C.—CODES WITH INTERIM RVUS

CPT[1]/ HCPCS[2]	MOD	Status	Description	Physician Work RVUs[3]	Fully Implemented Non-Facility PE RVUs	Year 2001 Transitional Non-Facility PE RVUs	Fully Implemented Facility PE RVUs	Year 2001 Transitional Facility PE RVUs	Mal-Practice RVUs	Fully Implemented Non-Facility Total	Year 2001 Transitional Non-Facility Total	Fully Implemented Facility Total	Year 2001 Transitional Facility Total	Global
11980		A	Implant hormone pellet(s)	1.48	1.14	1.14	0.63	0.63	0.10	2.72	2.72	2.21	2.21	000
15342		A	Cultured skin graft, 25 cm	1.00	2.20	2.20	0.78	0.78	0.39	3.59	3.59	2.17	2.17	010
15343		A	Culture skn graft addl 25 cm	0.25	0.28	0.28	0.10	0.10	0.09	0.62	0.62	0.44	0.44	ZZZ
16035		A	Incision of burn scab, initi	3.75	NA	NA	1.59	1.70	0.36	NA	NA	5.70	5.81	090
16036		A	Incise burn scab, addl incis	1.50	NA	NA	0.64	0.64	0.18	NA	NA	2.32	2.32	ZZZ
19100		A	Bx breast percut w/o image	1.27	3.33	2.67	0.46	0.43	0.10	4.70	4.04	1.83	1.80	000
19101		A	Biopsy of breast, open	3.18	9.82	8.00	2.97	2.86	0.20	13.20	11.38	6.35	6.24	010
19102		A	Bx breast percut w/image	2.00	4.58	4.58	0.73	0.73	0.08	6.66	6.66	2.81	2.81	000
19103		A	Bx breast percut w/device	2.37	10.83	10.83	0.86	0.86	0.08	13.28	13.28	3.31	3.31	000
19120		A	Removal of breast lesion	5.56	4.41	4.10	3.62	3.50	0.56	10.53	10.22	9.74	9.62	090
19125		A	Excision, breast lesion	6.06	5.04	4.57	3.78	3.62	0.61	11.71	11.24	10.45	10.29	090
19126		A	Excision, addl breast lesion	2.93	NA	NA	1.11	1.23	0.30	NA	NA	4.34	4.46	ZZZ
19295		A	Place breast clip, percut	0.00	2.61	2.61	0.94	0.94	0.01	2.62	2.62	0.95	0.95	ZZZ
20979		A	Us bone stimulation	0.62	0.57	0.57	0.25	0.25	0.04	1.23	1.23	0.91	0.91	000
21199		A	Reconstr lwr jaw w/advance	16.00	NA	NA	10.53	10.53	1.00	NA	NA	27.53	27.53	090
22520		A	Percut vertebroplasty thor	8.91	NA	NA	3.95	3.95	0.89	NA	NA	13.75	13.75	010
22521		A	Percut vertebroplasty lumb	8.34	NA	NA	3.72	3.72	0.84	NA	NA	12.90	12.90	010
22522		A	Percut vertebroplasty addl	3.00	NA	NA	1.20	1.20	0.30	NA	NA	4.50	4.50	ZZZ
30465		A	Repair nasal stenosis	11.64	NA	NA	9.12	9.12	0.82	NA	NA	21.58	21.58	090
33140		A	Heart revascularize (tmr)	20.00	NA	NA	12.79	12.79	2.27	NA	NA	35.06	35.06	090
33141		A	Heart tmr w/other procedure	4.84	NA	NA	1.97	1.97	0.60	NA	NA	7.41	7.41	ZZZ
33533		A	CABG, arterial, single	25.83	NA	NA	19.44	22.29	3.24	NA	NA	48.51	51.36	090
33534		A	CABG, arterial, two	28.82	NA	NA	20.12	23.69	3.63	NA	NA	52.57	56.14	090
33535		A	CABG, arterial, three	31.81	NA	NA	21.05	25.28	3.97	NA	NA	56.83	61.06	090
33536		A	Cabg, arterial, four or more	34.79	NA	NA	18.16	24.00	3.29	NA	NA	56.24	62.08	090
34800		A	Endovasc abdo repair w/tube	20.75	NA	NA	9.72	9.72	1.49	NA	NA	31.96	31.96	090
34802		A	Endovasc abdo repr w/device	23.00	NA	NA	10.62	10.62	1.65	NA	NA	35.27	35.27	090
34804		A	Endovasc abdo repr w/device	23.00	NA	NA	10.62	10.62	1.65	NA	NA	35.27	35.27	090
34808		A	Endovasc abdo occlud device	4.13	NA	NA	1.65	1.65	0.29	NA	NA	6.07	6.07	ZZZ
34812		A	Xpose for endoprosth, aortic	6.75	NA	NA	2.70	2.70	0.49	NA	NA	9.94	9.94	000
34813		A	Xpose for endoprosth, femorl	4.80	NA	NA	1.92	1.92	0.34	NA	NA	7.06	7.06	ZZZ
34820		A	Xpose for endoprosth, iliac	9.75	NA	NA	3.90	3.90	0.70	NA	NA	14.35	14.35	000
34825		A	Endovasc extend prosth, init	12.00	NA	NA	6.23	6.23	0.86	NA	NA	19.09	19.09	090
34826		A	Endovasc exten prosth, addl	4.13	NA	NA	1.65	1.65	0.29	NA	NA	6.07	6.07	ZZZ
34830		A	Open aortic tube prosth repr	32.59	NA	NA	14.81	14.81	2.34	NA	NA	49.74	49.74	090
34831		A	Open aortoiliac prosth repr	35.34	NA	NA	15.90	15.90	2.53	NA	NA	53.77	53.77	090
34832		A	Open aortofemor prosth repr	35.34	NA	NA	15.90	15.90	2.53	NA	NA	53.77	53.77	090
35600		A	Harvest artery for cabg	4.95	NA	NA	1.98	1.98	0.54	NA	NA	7.47	7.47	ZZZ
36540		B	Collect blood venous device	0.00	0.00	0.00	0.00	0.00	0.00	0.00	0.00	0.00	0.00	XXX
36831		A	Av fistula excision, open	8.00	2.95	2.95	2.95	2.95	0.79	11.74	11.74	11.74	11.74	090
36832		A	Av fistula revision, open	10.50	NA	NA	5.90	6.35	1.13	NA	NA	17.53	17.98	090
36870		A	Av fistula revision, open	5.16	30.67	30.67	2.51	2.51	0.40	36.23	36.23	8.07	8.07	090

[1] CPT codes and descriptions only are copyright 2000 American Medical Association. All Rights Reserved. Applicable FARS/DFARS Apply.
[2] Copyright 1994 American Dental Association. All rights reserved.
[3] + Indicates RVUs are not used for Medicare payment.
[4] PE RVUs = Practice Expense Relative Value Units.

ADDENDUM C.—CODES WITH INTERIM RVUS—Continued

CPT[1]/ HCPCS[2]	MOD	Status	Description	Physician Work RVUs[3]	Fully Implemented Non-Facility PE RVUs	Year 2001 Transitional Non-Facility PE RVUs	Fully Implemented Facility PE RVUs	Year 2001 Transitional Facility PE RVUs	Mal-Practice RVUs	Fully Implemented Non-Facility Total	Year 2001 Transitional Non-Facility Total	Fully Implemented Facility Total	Year 2001 Transitional Facility Total	Global
38500		A	Biopsy/removal, lymph nodes	2.88	2.64	2.41	2.30	2.16	0.28	5.80	5.57	5.46	5.32	010
38530		A	Biopsy/removal, lymph nodes	6.13	NA	NA	5.36	4.88	0.63	NA	NA	12.12	11.64	090
43231		A	Esoph endoscopy w/us exam	4.09	NA	NA	1.84	1.84	0.24	NA	NA	6.17	6.17	000
43232		A	Esoph endoscopy w/us fn bx	4.71	NA	NA	2.18	2.18	0.28	NA	NA	7.17	7.17	000
43240		A	Esoph endoscope w/drain cyst	7.39	NA	NA	3.05	3.05	0.45	NA	NA	10.89	10.89	000
43241		A	Upper GI endoscopy with tube	2.59	NA	NA	1.22	1.69	0.14	NA	NA	3.95	4.42	000
43242		A	Uppr gi endoscopy w/us fn bx	5.51	1.98	1.98	1.98	1.98	0.34	7.83	7.83	7.83	7.83	000
43256		A	Uppr gi endoscopy w stent	4.35	1.56	1.56	1.56	1.56	0.26	6.17	6.17	6.17	6.17	000
43752		B	Nasal/orogastric w/stent	0.00	0.00	0.00	0.00	0.00	0.00	0.00	0.00	0.00	0.00	XXX
44132		N	Enterectomy, cadaver donor	0.00	0.00	0.00	0.00	0.00	0.00	0.00	0.00	0.00	0.00	XXX
44133		N	Enterectomy, live donor	0.00	0.00	0.00	0.00	0.00	0.00	0.00	0.00	0.00	0.00	XXX
44135		N	Intestine transplnt, cadaver	0.00	0.00	0.00	0.00	0.00	0.00	0.00	0.00	0.00	0.00	XXX
44136		N	Intestine transplant, live	0.00	0.00	0.00	0.00	0.00	0.00	0.00	0.00	0.00	0.00	XXX
44360		A	Small bowel endoscopy	2.59	NA	NA	1.31	1.85	0.14	NA	NA	4.04	4.58	000
44361		A	Small bowel endoscopy/biopsy	2.87	NA	NA	1.41	2.02	0.15	NA	NA	4.43	5.04	000
44363		A	Small bowel endoscopy	3.50	NA	NA	1.60	2.01	0.19	NA	NA	5.29	5.70	000
44364		A	Small bowel endoscopy	3.74	NA	NA	1.73	2.56	0.21	NA	NA	5.68	6.51	000
44365		A	Small bowel endoscopy	3.31	NA	NA	1.58	2.30	0.18	NA	NA	5.07	5.79	000
44366		A	Small bowel endoscopy	4.41	NA	NA	1.96	2.96	0.22	NA	NA	6.59	7.59	000
44369		A	Small bowel endoscopy	4.52	NA	NA	1.95	2.98	0.23	NA	NA	6.70	7.73	000
44370		A	Small bowel endoscopy/stent	4.33	1.56	1.56	1.56	1.56	0.26	6.15	6.15	6.15	6.15	000
44372		A	Small bowel endoscopy	4.41	NA	NA	1.99	2.98	0.27	NA	NA	6.67	7.66	000
44373		A	Small bowel endoscopy	3.50	NA	NA	1.70	2.45	0.19	NA	NA	5.39	6.14	000
44376		A	Small bowel endoscopy	5.26	NA	NA	2.28	2.81	0.29	NA	NA	7.83	8.36	000
44377		A	Small bowel endoscopy/biopsy	5.53	NA	NA	2.38	2.94	0.28	NA	NA	8.19	8.75	000
44378		A	Small bowel endoscopy	7.13	NA	NA	2.95	3.64	0.37	NA	NA	10.45	11.14	000
44379		A	S bowel endoscope w/stent	7.07	2.52	2.52	2.52	2.52	0.45	10.04	10.04	10.04	10.04	000
44380		A	Small bowel endoscopy	1.05	NA	NA	0.74	1.01	0.08	NA	NA	1.87	2.14	000
44382		A	Small bowel endoscopy	1.27	NA	NA	0.82	1.16	0.09	NA	NA	2.18	2.52	000
44383		A	Ileoscopy w/stent	2.41	0.87	0.87	0.87	0.87	0.15	3.43	3.43	3.43	3.43	000
44388		A	Colon endoscopy	2.50	5.48	5.09	1.26	1.79	0.18	8.16	7.77	3.94	4.47	000
44389		A	Colonoscopy with biopsy	2.77	5.92	5.53	1.37	1.96	0.18	8.87	8.48	4.32	4.91	000
44390		A	Colonoscopy for foreign body	3.39	6.56	5.63	1.59	1.91	0.22	10.17	9.24	5.20	5.52	000
44391		A	Colonoscopy for bleeding	3.82	5.60	5.63	1.55	2.45	0.23	9.65	9.68	5.60	6.50	000
44392		A	Colonoscopy & polypectomy	3.38	6.12	5.99	1.59	2.33	0.23	9.73	9.60	5.20	5.94	000
44393		A	Colonoscopy, lesion removal	4.28	6.79	6.56	1.92	2.88	0.27	11.34	11.11	6.47	7.43	000
44394		A	Colonoscopy w/snare	3.92	6.54	6.31	1.79	2.67	0.26	10.72	10.49	5.97	6.85	000
44397		A	Colonoscopy w stent	4.23	NA	NA	1.90	1.90	0.30	NA	NA	6.43	6.43	000
44500		A	Intro, gastrointestinal tube	0.49	NA	NA	0.35	0.36	0.02	NA	NA	0.86	0.87	000
45300		A	Proctosigmoidoscopy dx	0.38	1.24	1.08	0.23	0.25	0.05	1.67	1.51	0.66	0.68	000
45303		A	Proctosigmoidoscopy dilate	0.44	1.41	1.23	0.26	0.28	0.06	1.91	1.73	0.76	0.78	000
45305		A	Protosigmoidoscopy w/bx	0.56	1.34	1.23	0.30	0.34	0.09	1.99	1.88	0.95	0.99	000
45307		A	Protosigmoidoscopy fb	0.94	2.26	2.04	0.44	0.68	0.15	3.35	3.13	1.53	1.77	000
45308		A	Protosigmoidoscopy removal	0.83	1.49	1.43	0.40	0.46	0.13	2.45	2.39	1.36	1.42	000
45309		A	Protosigmoidoscopy removal	1.11	2.07	1.86	0.50	0.53	0.17	3.35	3.14	1.78	1.81	000
45315		A	Protosigmoidoscopy removal	1.40	2.32	2.06	0.62	0.79	0.20	3.92	3.66	2.22	2.39	000
45317		A	Protosigmoidoscopy bleed	1.50	1.76	1.66	0.65	0.83	0.20	3.46	3.36	2.35	2.53	000
45320		A	Protosigmoidoscopy ablate	1.58	1.71	1.79	0.68	1.02	0.20	3.49	3.57	2.46	2.80	000
45321		A	Protosigmoidoscopy volvul	1.17	NA	NA	0.53	0.80	0.17	NA	NA	1.87	2.14	000
45327		A	Proctosigmoidoscopy w/stent	1.46	NA	NA	0.83	0.83	0.12	NA	NA	2.41	2.41	000
45330		A	Diagnostic sigmoidoscopy	0.88	1.75	1.65	0.42	0.46	0.05	2.68	2.58	1.35	1.39	000
45331		A	Sigmoidoscopy and biopsy	1.15	1.98	1.92	0.52	0.77	0.07	3.20	3.14	1.74	1.99	000
45332		A	Sigmoidoscopy w/fb removal	1.79	3.54	3.13	0.75	1.04	0.11	5.44	5.03	2.65	2.94	000
45333		A	Sigmoidoscopy & polypectomy	1.79	3.14	2.96	0.75	1.15	0.12	5.05	4.87	2.66	3.06	000
45334		A	Sigmoidoscopy for bleeding	2.73	NA	NA	1.09	1.55	0.16	NA	NA	3.98	4.44	000
45337		A	Sigmoidoscopy & decompress	2.15	NA	NA	0.89	1.37	0.15	NA	NA	3.19	3.67	000
45338		A	Sigmoidoscpy w/tumr remove	2.34	3.67	3.36	0.95	1.32	0.15	6.16	5.85	3.44	3.81	000
45339		A	Sigmoidoscopy w/ablate tumr	2.86	2.85	3.02	1.14	1.74	0.17	5.88	6.05	4.17	4.77	000
45341		A	Sigmoidoscopy w/ultrasound	3.46	NA	NA	1.66	1.66	0.24	NA	NA	5.36	5.36	000
45342		A	Sigmoidoscopy w/us guide bx	4.08	NA	NA	1.81	1.81	0.29	NA	NA	6.18	6.18	000
45345		A	Sigmodoscopy w/stent	2.66	NA	NA	1.30	1.30	0.18	NA	NA	4.14	4.14	000
45378		A	Diagnostic colonoscopy	3.68	6.60	6.07	1.70	2.38	0.20	10.48	9.95	5.58	6.26	000
45379		A	Colonoscopy w/fb removal	4.69	7.33	6.94	2.05	2.95	0.25	12.27	11.88	6.99	7.89	000
45380		A	Colonoscopy and biopsy	3.98	6.78	6.39	1.81	2.56	0.21	10.97	10.58	6.00	6.75	000
45382		A	Colonoscopy/control bleeding	5.69	7.95	7.56	2.23	3.27	0.27	13.91	13.52	8.19	9.23	000
45383		A	Lesion removal colonoscopy	5.83	7.82	7.47	2.48	3.47	0.32	13.97	13.62	8.63	9.62	000
45384		A	Lesion remove colonoscopy	4.67	7.41	6.96	2.06	2.95	0.24	12.32	11.87	6.97	7.86	000
45385		A	Lesion removal colonoscopy	5.27	7.57	7.48	2.28	3.30	0.28	13.12	13.03	7.83	8.85	000
45387		A	Colonoscopy w/stent	5.62	NA	NA	2.41	2.41	0.36	NA	NA	8.39	8.39	000
47379		C	Laparoscope procedure, liver	0.00	0.00	0.00	0.00	0.00	0.00	0.00	0.00	0.00	0.00	YYY
50545		A	Laparo radical nephrectomy	24.00	NA	NA	9.41	9.41	1.81	NA	NA	35.22	35.22	090
50546		A	Laparoscopic nephrectomy	20.48	NA	NA	8.31	8.31	1.37	NA	NA	30.16	30.16	090
50548		A	Laparo remove k/ureter	24.40	NA	NA	9.44	9.44	1.49	NA	NA	35.33	35.33	090
50947		A	Laparo new ureter/bladder	24.50	NA	NA	11.62	11.62	1.84	NA	NA	37.96	37.96	090
50948		A	Laparo new ureter/bladder	22.50	NA	NA	10.51	10.51	1.70	NA	NA	34.71	34.71	090
50949		C	Laparoscope proc, ureter	0.00	0.00	0.00	0.00	0.00	0.00	0.00	0.00	0.00	0.00	YYY
52341		A	Cysto w/ureter stricture tx	6.00	NA	NA	2.40	2.40	0.34	NA	NA	8.74	8.74	000
52342		A	Cysto w/up stricture tx	6.50	NA	NA	2.60	2.60	0.36	NA	NA	9.46	9.46	000
52343		A	Cysto w/renal stricture tx	7.20	NA	NA	2.88	2.88	0.40	NA	NA	10.48	10.48	000
52344		A	Cysto/uretero, stone remove	7.70	NA	NA	3.08	3.08	0.42	NA	NA	11.20	11.20	000
52345		A	Cysto/uretero w/up stricture	8.20	NA	NA	3.28	3.28	0.46	NA	NA	11.94	11.94	000
52346		A	Cystouretero w/renal strict	9.23	NA	NA	3.69	3.69	0.51	NA	NA	13.43	13.43	000
52351		A	Cystouretro & or pyeloscope	5.86	NA	NA	1.96	2.74	0.32	NA	NA	8.14	8.92	000

[1] CPT codes and descriptions only are copyright 2000 American Medical Association. All Rights Reserved. Applicable FARS/DFARS Apply.
[2] Copyright 1994 American Dental Association. All rights reserved.
[3] + Indicates RVUs are not used for Medicare payment.
[4] PE RVUs = Practice Expense Relative Value Units.

ADDENDUM C.—CODES WITH INTERIM RVUS—Continued

CPT[1]/ HCPCS[2]	MOD	Status	Description	Physician Work RVUs[3]	Fully Implemented Non-Facility PE RVUs	Year 2001 Transitional Non-Facility PE RVUs	Fully Implemented Facility PE RVUs	Year 2001 Transitional Facility PE RVUs	Mal-Practice RVUs	Fully Implemented Non-Facility Total	Year 2001 Transitional Non-Facility Total	Fully Implemented Facility Total	Year 2001 Transitional Facility Total	Global
52352		A	Cystouretro w/stone remove	6.88	NA	NA	2.30	3.78	0.38	NA	NA	9.56	11.04	000
52353		A	Cystouretero w/lithotripsy	7.97	NA	NA	2.66	4.38	0.44	NA	NA	11.07	12.79	000
52354		A	Cystouretero w/biopsy	7.34	NA	NA	2.45	3.44	0.41	NA	NA	10.20	11.19	000
52355		A	Cystouretero w/excise tumor	8.82	NA	NA	2.95	3.82	0.50	NA	NA	12.27	13.14	000
52400		A	Cystouretero w/congen repr	9.68	NA	NA	5.36	5.42	0.53	NA	NA	15.57	15.63	090
54512		A	Excise lesion testis	8.58	NA	NA	4.86	4.86	0.51	NA	NA	13.95	13.95	090
54522		A	Orchiectomy, partial	9.50	NA	NA	5.79	5.79	0.57	NA	NA	15.86	15.86	090
55873		A	Cryoablate prostate	17.80	NA	NA	10.16	10.16	1.01	NA	NA	28.97	28.97	090
57022		A	I &d vaginal hematoma, ob	2.56	NA	NA	1.60	1.60	0.14	NA	NA	4.30	4.30	010
57023		A	I &d vag hematoma, trauma	2.56	NA	NA	1.60	1.60	0.14	NA	NA	4.30	4.30	010
57287		A	Revise/remove sling repair	10.71	NA	NA	7.02	7.02	0.64	NA	NA	18.37	18.37	090
58353		A	Endometr ablate, thermal	3.56	NA	NA	2.16	2.16	0.19	NA	NA	5.91	5.91	010
61697		A	Brain aneurysm repr, complx	50.52	NA	NA	27.76	27.76	9.57	NA	NA	87.85	87.85	090
61698		A	Brain aneurysm repr, complx	48.41	NA	NA	26.87	26.87	9.28	NA	NA	84.56	84.56	090
61700		A	Brain aneurysm repr , simple	50.52	NA	NA	27.76	29.42	10.18	NA	NA	88.46	90.12	090
61702		A	Inner skull vessel surgery	48.41	NA	NA	26.87	30.01	9.75	NA	NA	85.03	88.17	090
62252		A	Csf shunt reprogram	0.74	1.40	1.40	1.40	1.40	0.04	2.18	2.18	2.18	2.18	XXX
63040		A	Laminotomy, single cervical	18.81	NA	NA	12.98	15.35	3.36	NA	NA	35.15	37.52	090
63042		A	Laminotomy, single lumbar	17.47	NA	NA	12.60	14.67	3.11	NA	NA	33.18	35.25	090
63043		B	Laminotomy, addl cervical	0.00	0.00	0.00	0.00	0.00	0.00	0.00	0.00	0.00	0.00	ZZZ
63044		B	Laminotomy, addl lumbar	0.00	0.00	0.00	0.00	0.00	0.00	0.00	0.00	0.00	0.00	ZZZ
64612		A	Destroy nerve, face muscle	1.96	2.95	2.61	1.65	1.44	0.09	5.00	4.66	3.70	3.49	010
64613		A	Destroy nerve, spine muscle	1.96	1.61	1.60	1.37	1.23	0.10	3.67	3.66	3.43	3.29	010
64614		A	Destroy nerve, extrem musc	2.20	3.37	3.37	0.81	0.81	0.16	5.73	5.73	3.17	3.17	010
66982		A	Cataract surgery, complex	13.50	NA	NA	9.09	9.09	0.55	NA	NA	23.14	23.14	090
66984		A	Cataract surg w/iol, i stage	10.23	NA	NA	7.60	8.77	0.41	NA	NA	18.24	19.41	090
67221		A	Ocular photodynamic ther	4.01	4.40	4.40	2.00	2.00	0.50	8.91	8.91	6.51	6.51	000
69714		A	Implant temple bone w/stimul	14.00	NA	NA	8.71	8.71	0.97	NA	NA	23.68	23.68	090
69715		A	Temple bne implnt w/stimulat	18.25	NA	NA	10.49	10.49	1.25	NA	NA	29.99	29.99	090
69717		A	Temple bone implant revision	14.98	NA	NA	8.37	8.37	1.04	NA	NA	24.39	24.39	090
69718		A	Revise temple bone implant	18.50	NA	NA	10.58	10.58	1.27	NA	NA	30.35	30.35	090
70496		A	Ct angiography, head	1.75	7.71	7.71	7.71	7.71	0.54	10.00	10.00	10.00	10.00	XXX
70498		A	Ct angiography, neck	1.75	7.71	7.71	7.71	7.71	0.54	10.00	10.00	10.00	10.00	XXX
70540		A	Mri orbit/face/neck w/o dye	0.98	11.48	11.69	11.48	11.69	0.36	12.82	13.03	12.82	13.03	XXX
70542		A	Mri orbit/face/neck w/dye	1.17	13.76	13.76	13.76	13.76	0.43	15.36	15.36	15.36	15.36	XXX
70543		A	Mri orbt/fac/nck w/o&w dye	1.56	25.27	25.27	25.27	25.27	0.78	27.61	27.61	27.61	27.61	XXX
70544		A	Mr angiography head w/o dye	1.20	11.56	11.56	11.56	11.56	0.56	13.32	13.32	13.32	13.32	XXX
70545		A	Mr angiography head w/dye	1.20	11.56	11.56	11.56	11.56	0.56	13.32	13.32	13.32	13.32	XXX
70546		A	Mr angiograph head w/o&w dye	1.80	22.89	22.89	22.89	22.89	0.56	25.25	25.25	25.25	25.25	XXX
70547		A	Mr angiography neck w/o dye	1.20	11.56	11.56	11.56	11.56	0.56	13.32	13.32	13.32	13.32	XXX
70548		A	Mr angiography neck w/dye	1.20	11.56	11.56	11.56	11.56	0.56	13.32	13.32	13.32	13.32	XXX
70549		A	Mr angiograph neck w/o&w dye	1.80	22.89	22.89	22.89	22.89	0.56	25.25	25.25	25.25	25.25	XXX
71275		A	Ct angiography, chest	1.20	9.26	9.26	9.26	9.26	0.37	10.83	10.83	10.83	10.83	XXX
71550		A	Mri chest w/o dye	1.10	11.52	11.74	11.52	11.74	0.41	13.03	13.25	13.03	13.25	XXX
71551		A	Mri chest w/dye	1.30	13.80	13.80	13.80	13.80	0.48	15.58	15.58	15.58	15.58	XXX
71552		A	Mri chest w/o&w dye	1.70	25.31	25.31	25.31	25.31	0.63	27.64	27.64	27.64	27.64	XXX
72191		A	Ct angiograph pelv w/o&w dye	1.20	8.91	8.91	8.91	8.91	0.37	10.48	10.48	10.48	10.48	XXX
72195		A	Mri pelvis w/o dye	1.10	11.52	11.52	11.52	11.52	0.41	13.03	13.03	13.03	13.03	XXX
72196		A	Mri pelvis w/dye	1.30	13.80	13.44	13.80	13.44	0.48	15.58	15.22	15.58	15.22	XXX
72197		A	Mri pelvis w/o & w dye	1.70	25.31	25.31	25.31	25.31	0.85	27.86	27.86	27.86	27.86	XXX
73206		A	Ct angio upr extrm w/o&w dye	1.20	7.85	7.85	7.85	7.85	0.37	9.42	9.42	9.42	9.42	XXX
73218		A	Mri upper extremity w/o dye	0.98	11.48	11.48	11.48	11.48	0.36	12.82	12.82	12.82	12.82	XXX
73219		A	Mri upper extremity w/dye	1.17	13.76	13.76	13.76	13.76	0.43	15.36	15.36	15.36	15.36	XXX
73220		A	Mri uppr extremity w/o&w dye	1.56	25.27	22.03	25.27	22.03	0.78	27.61	24.37	27.61	24.37	XXX
73221		A	Mri joint upr extrem w/o dye	0.98	11.48	11.63	11.48	11.63	0.36	12.82	12.97	12.82	12.97	XXX
73222		A	Mri joint upr extrem w/ dye	1.17	13.76	13.76	13.76	13.76	0.43	15.36	15.36	15.36	15.36	XXX
73223		A	Mri joint upr extr w/o&w dye	1.56	25.27	25.27	25.27	25.27	0.78	27.61	27.61	27.61	27.61	XXX
73706		A	Ct angio lwr extr w/o&w dye	1.20	7.85	7.85	7.85	7.85	0.37	9.42	9.42	9.42	9.42	XXX
73718		A	Mri lower extremity w/o dye	0.98	11.48	11.48	11.48	11.48	0.36	12.82	12.82	12.82	12.82	XXX
73719		A	Mri lower extremity w/dye	1.17	13.76	13.76	13.76	13.76	0.43	15.36	15.36	15.36	15.36	XXX
73720		A	Mri lwr extremity w/o&w dye	1.56	25.26	22.02	25.26	22.02	0.78	27.60	24.36	27.60	24.36	XXX
73721		A	Mri joint of lwr extre w/o d	0.98	11.48	11.63	11.48	11.63	0.36	12.82	12.97	12.82	12.97	XXX
73722		A	Mri joint of lwr extr w/dye	1.17	13.76	13.76	13.76	13.76	0.43	15.36	15.36	15.36	15.36	XXX
73723		A	Mri joint lwr extr w/o&w dye	1.56	25.27	25.27	25.27	25.27	0.78	27.61	27.61	27.61	27.61	XXX
74175		A	Ct angio abdom w/o&w dye	1.20	8.91	8.91	8.91	8.91	0.37	10.48	10.48	10.48	10.48	XXX
74181		A	Mri abdomen w/o dye	1.10	11.52	11.74	11.52	11.74	0.41	13.03	13.25	13.03	13.25	XXX
74182		A	Mri abdomen w/dye	1.30	13.80	13.80	13.80	13.80	0.48	15.58	15.58	15.58	15.58	XXX
74183		A	Mri abdomen w/o&w dye	1.70	25.31	25.31	25.31	25.31	0.85	27.86	27.86	27.86	27.86	XXX
75635		A	Ct angio abdominal arteries	1.89	9.19	9.19	9.19	9.19	0.37	11.45	11.45	11.45	11.45	XXX
75952		A	Endovasc repair abdom aorta	4.00	1.60	1.60	1.60	1.60	0.68	6.28	6.28	6.28	6.28	XXX
75953		A	Abdom aneurysm endovas rpr	1.36	0.54	0.54	0.54	0.54	0.68	2.58	2.58	2.58	2.58	XXX
76012		A	Percut vertebroplasty fluor	1.31	0.49	0.49	0.49	0.49	1.10	2.90	2.90	2.90	2.90	XXX
76013		A	Percut vertebroplasty, ct	1.38	0.52	0.52	0.52	0.52	0.48	2.38	2.38	2.38	2.38	XXX
76393		A	Mr guidance for needle place	1.50	11.66	11.66	11.66	11.66	0.52	13.68	13.68	13.68	13.68	XXX
76818		A	Fetl biophys profil w/stress	0.86	1.93	1.96	1.93	1.96	0.12	2.91	2.94	2.91	2.94	XXX
76819		A	Fetl biophys profil w/o strs	0.63	1.84	1.84	1.84	1.84	0.11	2.58	2.58	2.58	2.58	XXX
76975		A	GI endoscopic ultrasound	0.81	1.80	1.84	1.80	1.84	0.11	2.72	2.76	2.72	2.76	XXX
77520		C	Proton trmt, simple w/o comp	0.00	0.00	0.00	0.00	0.00	0.00	0.00	0.00	0.00	0.00	XXX
77522		C	Proton trmt, simple w/comp	0.00	0.00	0.00	0.00	0.00	0.00	0.00	0.00	0.00	0.00	XXX
77523		C	Proton trmt, intermediate	0.00	0.00	0.00	0.00	0.00	0.00	0.00	0.00	0.00	0.00	XXX
77525		C	Proton treatment, complex	0.00	0.00	0.00	0.00	0.00	0.00	0.00	0.00	0.00	0.00	XXX
90940		X	Hemodialysis access study	0.00	0.00	0.00	0.00	0.00	0.00	0.00	0.00	0.00	0.00	XXX
91132		C	Electrogastrography	0.00	0.00	0.00	0.00	0.00	0.00	0.00	0.00	0.00	0.00	XXX

[1] CPT codes and descriptions only are copyright 2000 American Medical Association. All Rights Reserved. Applicable FARS/DFARS Apply.
[2] Copyright 1994 American Dental Association. All rights reserved.
[3] + Indicates RVUs are not used for Medicare payment.
[4] PE RVUs = Practice Expense Relative Value Units.

ADDENDUM C.—CODES WITH INTERIM RVUS—Continued

CPT[1]/ HCPCS[2]	MOD	Status	Description	Physician Work RVUs[3]	Fully Implemented Non-Facility PE RVUs	Year 2001 Transitional Non-Facility PE RVUs	Fully Implemented Facility PE RVUs	Year 2001 Transitional Facility PE RVUs	Mal-Practice RVUs	Fully Implemented Non-Facility Total	Year 2001 Transitional Non-Facility Total	Fully Implemented Facility Total	Year 2001 Transitional Facility Total	Global
91133		C	Electrogastrography w/test	0.00	0.00	0.00	0.00	0.00	0.00	0.00	0.00	0.00	0.00	XXX
92585		A	Auditor evoke potent, compre	0.50	2.06	2.43	2.06	2.43	0.14	2.70	3.07	2.70	3.07	XXX
92586		A	Auditor evoke potent, limit	0.00	1.84	1.84	NA	NA	0.12	1.96	1.96	NA	NA	XXX
93662		A	Intracardiac ecg (ice)	2.80	4.98	4.98	4.98	4.98	0.41	8.19	8.19	8.19	8.19	ZZZ
93668		N	Peripheral vascular rehab	0.00	0.00	0.00	0.00	0.00	0.01	0.01	0.01	0.01	0.01	XXX
96570		A	Photodynamic tx, 30 min	1.10	0.44	0.44	0.44	0.44	0.04	1.58	1.58	1.58	1.58	ZZZ
96571		A	Photodynamic tx, addl 15 min	0.55	0.22	0.22	0.22	0.22	0.02	0.79	0.79	0.79	0.79	ZZZ
97532		A	Cognitive skills development	0.44	0.23	0.23	0.08	0.08	0.01	0.68	0.68	0.53	0.53	XXX
97533		A	Sensory integration	0.44	0.29	0.29	0.08	0.08	0.01	0.74	0.74	0.53	0.53	XXX
97601		A	Wound care selective	0.50	0.49	0.49	0.09	0.09	0.04	1.03	1.03	0.63	0.63	XXX
97602		B	Wound care non-selective	0.00	0.00	0.00	0.00	0.00	0.00	0.00	0.00	0.00	0.00	XXX
97802		N	Medical nutrition, indiv, in	0.00	0.00	0.00	0.00	0.00	0.00	0.00	0.00	0.00	0.00	XXX
97803		N	Med nutrition, indiv, subseq	0.00	0.00	0.00	0.00	0.00	0.00	0.00	0.00	0.00	0.00	XXX
97804		N	Medical nutrition, group	0.00	0.00	0.00	0.00	0.00	0.00	0.00	0.00	0.00	0.00	XXX
99172		N	Ocular function screen	0.00	0.00	0.00	0.00	0.00	0.00	0.00	0.00	0.00	0.00	XXX
99234		A	Observ/hosp same date	1.95	NA	NA	0.70	0.71	0.11	NA	NA	2.76	2.77	XXX
99235		A	Observ/hosp same date	2.81	NA	NA	0.99	1.03	0.13	NA	NA	3.93	3.97	XXX
99236		A	Observ/hosp same date	3.66	NA	NA	1.25	1.25	0.17	NA	NA	5.08	5.08	XXX
99291		A	Critical care, first hour	4.00	1.57	1.57	1.32	1.38	0.14	5.71	5.71	5.46	5.52	XXX
99292		A	Critical care, addl 30 min	2.00	0.85	0.81	0.65	0.66	0.07	2.92	2.88	2.72	2.73	ZZZ
G0179		A	MD recertification HHA patient	0.45	1.09	1.09	0.18	0.18	0.06	1.60	1.60	0.69	0.69	XXX
G0180		A	MD certification HHA patient	0.67	1.18	1.18	0.27	0.27	0.06	1.91	1.91	1.00	1.00	XXX
G0181		A	Home health care supervision	1.73	1.40	1.40	0.63	0.63	0.06	3.19	3.19	2.42	2.42	XXX
G0182		A	Hospice care supervision	1.73	1.73	1.73	0.60	0.60	0.06	3.52	3.52	2.39	2.39	XXX
G0184		A	Ocular photocoagulation	0.47	0.23	0.23	0.23	0.23	0.50	1.20	1.20	1.20	1.20	ZZZ
G0193		C	Endoscopic study swallow functn	0.00	0.00	0.00	0.00	0.00	0.00	0.00	0.00	0.00	0.00	XXX
G0194		C	Sensory testing endoscopic stud	0.00	0.00	0.00	0.00	0.00	0.00	0.00	0.00	0.00	0.00	XXX
G0195		C	Clinical eval swallowing funct	0.00	0.00	0.00	0.00	0.00	0.00	0.00	0.00	0.00	0.00	XXX
G0196		C	Eval of swallowing with radioopa	0.00	0.00	0.00	0.00	0.00	0.00	0.00	0.00	0.00	0.00	XXX
G0197		A	Eval of pt for prescip speech devi	1.35	1.91	1.91	0.77	0.77	0.04	3.30	3.30	2.16	2.16	XXX
G0198		A	Patient adapation & train for spe	0.99	1.05	1.05	0.57	0.57	0.03	2.07	2.07	1.59	1.59	XXX
G0199		A	Reevaluation of patient use spec	1.01	1.72	1.72	0.58	0.58	0.03	2.76	2.76	1.62	1.62	XXX
G0200		A	Eval of patient prescip of voice p	1.35	1.91	1.91	0.77	0.77	0.04	3.30	3.30	2.16	2.16	XXX
G0201		A	Modi for training in use voice pro	0.99	1.05	1.05	0.57	0.57	0.03	2.07	2.07	1.59	1.59	XXX
M0302		A	Assessment of cardiac output	0.17	0.88	0.88	0.88	0.88	0.02	1.07	1.07	1.07	1.07	XXX

[1] CPT codes and descriptions only are copyright 2000 American Medical Association. All Rights Reserved. Applicable FARS/DFARS Apply.
[2] Copyright 1994 American Dental Association. All rights reserved.
[3] + Indicates RVUs are not used for Medicare payment.
[4] PE RVUs = Practice Expense Relative Value Units.

ADDENDUM D.—2002 GEOGRAPHIC PRACTICE COST INDICES BY MEDICARE CARRIER AND LOCALITY

Carrier No.	Locality No.	Locality name	Work	Practice expense	Malpractice
00510	00	ALABAMA	0.978	0.870	0.807
00831	01	ALASKA	1.064	1.172	1.223
00832	00	ARIZONA	0.994	0.978	1.111
00520	13	ARKANSAS	0.953	0.847	0.340
02050	26	ANAHEIM/SANTA ANA, CA	1.037	1.184	0.955
02050	18	LOS ANGELES, CA	1.056	1.139	0.955
31140	03	MARIN/NAPA/SOLANO, CA	1.015	1.248	0.687
31140	07	OAKLAND/BERKELEY, CA	1.041	1.235	0.687
31140	05	SAN FRANCISCO, CA	1.068	1.458	0.687
31140	06	SAN MATEO, CA	1.048	1.432	0.687
31140	09	SANTA CLARA, CA	1.063	1.380	0.639
02050	17	VENTURA, CA	1.028	1.125	0.783
02050	99	REST OF CALIFORNIA*	1.007	1.034	0.748
31140	99	REST OF CALIFORNIA*	1.007	1.034	0.748
00824	01	COLORADO	0.985	0.992	0.840
10230	00	CONNECTICUT	1.050	1.156	0.966
00902	01	DELAWARE	1.019	1.035	0.712
00903	01	DC + MD/VA SUBURBS	1.050	1.166	0.909
00590	03	FORT LAUDERDALE, FL	0.996	1.018	1.877
00590	04	MIAMI, FL	1.015	1.052	2.528
00590	99	REST OF FLORIDA	0.975	0.946	1.265
00511	01	ATLANTA, GA	1.006	1.059	0.935
00511	99	REST OF GEORGIA	0.970	0.892	0.935
00833	01	HAWAII/GUAM	0.997	1.124	0.834
05130	00	IDAHO	0.960	0.881	0.497
00952	16	CHICAGO, IL	1.028	1.092	1.797
00952	12	EAST ST. LOUIS, IL	0.988	0.924	1.691
00952	15	SUBURBAN CHICAGO, IL	1.006	1.071	1.645
00952	99	REST OF ILLINOIS	0.964	0.889	1.157
00630	00	INDIANA	0.981	0.922	0.481
00826	00	IOWA	0.959	0.876	0.596

ADDENDUM D.—2002 GEOGRAPHIC PRACTICE COST INDICES BY MEDICARE CARRIER AND LOCALITY—Continued

Carrier No.	Locality No.	Locality name	Work	Practice expense	Malpractice
00650	00	KANSAS*	0.963	0.895	0.756
00740	04	KANSAS*	0.963	0.895	0.756
00660	00	KENTUCKY	0.970	0.866	0.877
00528	01	NEW ORLEANS, LA	0.998	0.945	1.283
00528	99	REST OF LOUISIANA	0.968	0.870	1.073
31142	03	SOUTHERN MAINE	0.979	0.999	0.666
31142	99	REST OF MAINE	0.961	0.910	0.666
00901	01	BALTIMORE/SURR. CNTYS, MD	1.021	1.038	0.916
00901	99	REST OF MARYLAND	0.984	0.972	0.774
31143	01	METROPOLITAN BOSTON	1.041	1.239	0.784
31143	99	REST OF MASSACHUSETTS	1.010	1.129	0.784
00953	01	DETROIT, MI	1.043	1.038	2.738
00953	99	REST OF MICHIGAN	0.997	0.938	1.571
10240	00	MINNESOTA	0.990	0.974	0.452
10250	00	MISSISSIPPI	0.957	0.837	0.779
00740	02	METROPOLITAN KANSAS CITY, MO	0.988	0.967	0.846
00523	01	METROPOLITAN ST. LOUIS, MO	0.994	0.938	0.846
00740	99	REST OF MISSOURI*	0.946	0.825	0.793
00523	99	REST OF MISSOURI*	0.946	0.825	0.793
00751	01	MONTANA	0.950	0.876	0.727
00655	00	NEBRASKA	0.948	0.877	0.430
00834	00	NEVADA	1.005	1.039	1.209
31144	40	NEW HAMPSHIRE	0.986	1.030	0.825
00805	01	NORTHERN NJ	1.058	1.193	0.860
00805	99	REST OF NEW JERSEY	1.029	1.110	0.860
00521	05	NEW MEXICO	0.973	0.900	0.902
00803	01	MANHATTAN, NY	1.094	1.351	1.668
00803	02	NYC SUBURBS/LONG I., NY	1.068	1.251	1.952
00803	03	POUGHKPSIE/N NYC SUBURBS, NY	1.011	1.075	1.275
14330	04	QUEENS, NY	1.058	1.228	1.871
00801	99	REST OF NEW YORK	0.998	0.944	0.764
05535	00	NORTH CAROLINA	0.970	0.931	0.595
00820	01	NORTH DAKOTA	0.950	0.880	0.657
16360	00	OHIO	0.988	0.944	0.957
00522	00	OKLAHOMA	0.968	0.876	0.444
00835	01	PORTLAND, OR	0.996	1.049	0.436
00835	99	REST OF OREGON	0.961	0.933	0.436
00865	01	METROPOLITAN PHILADELPHIA, PA	1.023	1.092	1.413
00865	99	REST OF PENNSYLVANIA	0.989	0.929	0.774
00973	20	PUERTO RICO	0.881	0.712	0.275
00870	01	RHODE ISLAND	1.017	1.065	0.883
00880	01	SOUTH CAROLINA	0.974	0.904	0.279
00820	02	SOUTH DAKOTA	0.935	0.878	0.406
05440	35	TENNESSEE	0.975	0.900	0.592
00900	31	AUSTIN, TX	0.986	0.996	0.859
00900	20	BEAUMONT, TX	0.992	0.890	1.338
00900	09	BRAZORIA, TX	0.992	0.978	1.338
00900	11	DALLAS, TX	1.010	1.065	0.931
00900	28	FORT WORTH, TX	0.987	0.981	0.931
00900	15	GALVESTON, TX	0.988	0.969	1.338
00900	18	HOUSTON, TX	1.020	1.007	1.336
00900	99	REST OF TEXAS	0.966	0.880	0.956
00910	09	UTAH	0.976	0.941	0.644
31145	50	VERMONT	0.973	0.986	0.539
00973	50	VIRGIN ISLANDS	0.965	1.023	1.002
10490	00	VIRGINIA	0.984	0.938	0.500
00836	02	SEATTLE (KING CNTY), WA	1.005	1.100	0.788
00836	99	REST OF WASHINGTON	0.981	0.972	0.788
16510	16	WEST VIRGINIA	0.963	0.850	1.378
00951	00	WISCONSIN	0.981	0.929	0.939
00825	21	WYOMING	0.967	0.895	1.005

*Payment locality is serviced by two carriers.

Note: Work GPCI is the 1/4 work GPCI required by Section 1848(e)(1)(A)(iii) of the Social Security Act. GPCIs rescaled by the following factors for budget netrality: Work = 0.99699; Practice Expense = 0.99235; Malpractice Expense = 1.00215.

ADDENDUM E.—2001 GEOGRAPHIC PRACTICE COST INDICES BY MEDICARE CARRIER AND LOCALITY

Carrier No.	Locality No.	Locality name	Work	Practice expense	Malpractice
00510	00	ALABAMA	0.978	0.871	0.841

ADDENDUM E.—2001 GEOGRAPHIC PRACTICE COST INDICES BY MEDICARE CARRIER AND LOCALITY—Continued

Carrier No.	Locality No.	Locality name	Work	Practice expense	Malpractice
00831	01	ALASKA	1.063	1.172	1.378
00832	00	ARIZONA	0.994	0.975	1.150
00520	13	ARKANSAS	0.953	0.851	0.371
02050	26	ANAHEIM/SANTA ANA, CA	1.036	1.187	0.901
02050	18	LOS ANGELES, CA	1.055	1.169	0.901
31140	03	MARIN/NAPA/SOLANO, CA	1.014	1.205	0.677
31140	07	OAKLAND/BERKELEY, CA	1.040	1.216	0.677
31140	05	SAN FRANCISCO, CA	1.067	1.378	0.677
31140	06	SAN MATEO, CA	1.047	1.353	0.677
31140	09	SANTA CLARA, CA	1.062	1.321	0.653
02050	17	VENTURA, CA	1.027	1.128	0.750
02050	99	REST OF CALIFORNIA*	1.007	1.039	0.723
31140	99	REST OF CALIFORNIA*	1.007	1.039	0.723
00824	01	COLORADO	0.986	0.981	0.817
10230	00	CONNECTICUT	1.049	1.164	1.009
00902	01	DELAWARE	1.019	1.032	0.786
00903	01	DC + MD/VA SUBURBS	1.050	1.164	0.970
00590	03	FORT LAUDERDALE, FL	0.996	1.022	1.830
00590	04	MIAMI, FL	1.015	1.064	2.439
00590	99	REST OF FLORIDA	0.975	0.947	1.296
00511	01	ATLANTA, GA	1.006	1.046	0.943
00511	99	REST OF GEORGIA	0.970	0.896	0.943
00833	01	HAWAII/GUAM	0.997	1.154	0.894
05130	00	IDAHO	0.960	0.887	0.532
00952	16	CHICAGO, IL	1.027	1.090	1.745
00952	12	EAST ST. LOUIS, IL	0.988	0.927	1.589
00952	15	SUBURBAN CHICAGO, IL	1.006	1.069	1.505
00952	99	REST OF ILLINOIS	0.964	0.888	1.074
00630	00	INDIANA	0.981	0.919	0.445
00826	00	IOWA	0.959	0.879	0.622
00650	00	KANSAS*	0.963	0.897	0.823
00740	04	KANSAS*	0.963	0.897	0.823
00660	00	KENTUCKY	0.970	0.870	0.842
00528	01	NEW ORLEANS, LA	0.998	0.947	1.218
00528	99	REST OF LOUISIANA	0.969	0.876	1.052
31142	03	SOUTHERN MAINE	0.979	1.015	0.687
31142	99	REST OF MAINE	0.961	0.917	0.687
00901	01	BALTIMORE/SURR. CNTYS, MD	1.020	1.038	1.007
00901	99	REST OF MARYLAND	0.985	0.979	0.820
31143	01	METROPOLITAN BOSTON	1.040	1.218	0.748
31143	99	REST OF MASSACHUSETTS	1.010	1.111	0.748
00953	01	DETROIT, MI	1.042	1.030	2.903
00953	99	REST OF MICHIGAN	0.996	0.938	1.700
10240	00	MINNESOTA	0.990	0.971	0.479
10250	00	MISSISSIPPI	0.957	0.841	0.750
00740	02	METROPOLITAN KANSAS CITY, MO	0.988	0.958	1.021
00523	01	METROPOLITAN ST. LOUIS, MO	0.994	0.940	1.022
00740	99	REST OF MISSOURI*	0.946	0.826	0.979
00523	99	REST OF MISSOURI*	0.946	0.826	0.979
00751	01	MONTANA	0.951	0.877	0.729
00655	00	NEBRASKA	0.949	0.875	0.436
00834	00	NEVADA	1.005	1.035	1.103
31144	40	NEW HAMPSHIRE	0.987	1.032	0.919
00805	01	NORTHERN NJ	1.057	1.192	0.827
00805	99	REST OF NEW JERSEY	1.028	1.102	0.827
00521	05	NEW MEXICO	0.973	0.905	0.809
00803	01	MANHATTAN, NY	1.093	1.352	1.661
00803	02	NYC SUBURBS/LONG I., NY	1.067	1.242	1.942
00803	03	POUGHKPSIE/N NYC SUBURBS, NY	1.010	1.079	1.300
14330	04	QUEENS, NY	1.057	1.231	1.855
00801	99	REST OF NEW YORK	0.998	0.951	0.778
05535	00	NORTH CAROLINA	0.970	0.927	0.546
00820	01	NORTH DAKOTA	0.950	0.879	0.657
16360	00	OHIO	0.989	0.941	1.016
00522	00	OKLAHOMA	0.969	0.879	0.447
00835	01	PORTLAND, OR	0.996	1.035	0.511
00835	99	REST OF OREGON	0.961	0.935	0.511
00865	01	METROPOLITAN PHILADELPHIA, PA	1.023	1.090	1.310
00865	99	REST OF PENNSYLVANIA	0.989	0.930	0.705
00973	20	PUERTO RICO	0.882	0.720	0.317
00870	01	RHODE ISLAND	1.017	1.067	1.036

ADDENDUM E.—2001 GEOGRAPHIC PRACTICE COST INDICES BY MEDICARE CARRIER AND LOCALITY—Continued

Carrier No.	Locality No.	Locality name	Work	Practice expense	Malpractice
00880	01	SOUTH CAROLINA	0.975	0.905	0.279
00820	02	SOUTH DAKOTA	0.935	0.876	0.420
05440	35	TENNESSEE	0.975	0.900	0.572
00900	31	AUSTIN, TX	0.986	0.998	0.854
00900	20	BEAUMONT, TX	0.992	0.895	1.362
00900	09	BRAZORIA, TX	0.992	0.978	1.362
00900	11	DALLAS, TX	1.010	1.040	0.930
00900	28	FORT WORTH, TX	0.987	0.976	0.930
00900	15	GALVESTON, TX	0.988	0.969	1.362
00900	18	HOUSTON, TX	1.020	1.007	1.377
00900	99	REST OF TEXAS	0.966	0.884	0.914
00910	09	UTAH	0.977	0.925	0.619
31145	50	VERMONT	0.973	0.985	0.544
00973	50	VIRGIN ISLANDS	0.965	1.029	1.017
10490	00	VIRGINIA	0.985	0.939	0.529
00836	02	SEATTLE (KING CNTY), WA	1.005	1.090	0.765
00836	99	REST OF WASHINGTON	0.982	0.974	0.765
16510	16	WEST VIRGINIA	0.963	0.852	1.242
00951	00	WISCONSIN	0.981	0.931	0.890
00825	21	WYOMING	0.967	0.895	0.855

*Payment locality is serviced by two carriers.

Note: Work GPCI is the ¼ work GPCI required by Section 1848(e)(1)(A)(iii) of the Social Security Act. GPCIs rescaled by the following factors for budget neutrality: Work = 0.99699; Practice Expense = 0.99235; Malpractice Expense = 1.00215.

ADDENDUM F.—PROPOSED 2002 VERSUS 1999 GEOGRAPHIC ADJUSTMENT FACTORS (GAF)

[In Descending Order of Difference]

Locality	1999 GAF	2002 GAF	Difference	Percent difference
SAN MATEO, CA	1.122	1.199	0.077	6.89
SAN FRANCISCO, CA	1.143	1.221	0.078	6.84
SANTA CLARA, CA	1.125	1.184	0.059	5.28
MARIN/NAPA/SOLANO, CA	1.058	1.104	0.046	4.33
METROPOLITAN BOSTON	1.088	1.117	0.029	2.64
OAKLAND/BERKELEY, CA	1.086	1.113	0.027	2.46
REST OF MASSACHUSETTS	1.030	1.053	0.023	2.24
DALLAS, TX	1.009	1.031	0.022	2.19
UTAH	0.931	0.951	0.020	2.10
SEATTLE (KING CNTY), WA	1.023	1.038	0.015	1.48
INDIANA	0.927	0.941	0.014	1.46
NORTH CAROLINA	0.928	0.942	0.014	1.46
WYOMING	0.925	0.938	0.013	1.36
PORTLAND, OR	0.987	1.000	0.013	1.35
REST OF NEW JERSEY	1.044	1.058	0.014	1.34
COLORADO	0.971	0.983	0.012	1.27
ATLANTA, GA	1.015	1.026	0.011	1.10
SOUTH CAROLINA	0.913	0.923	0.010	1.06
NEVADA	1.016	1.026	0.010	1.00
SOUTH DAKOTA	0.886	0.895	0.009	0.99
MINNESOTA	0.957	0.966	0.009	0.99
REST OF PENNSYLVANIA	0.948	0.956	0.008	0.89
NORTHERN NJ	1.099	1.109	0.010	0.89
VERMONT	0.957	0.965	0.008	0.88
NEBRASKA	0.894	0.902	0.008	0.87
TENNESSEE	0.924	0.932	0.008	0.82
VENTURA, CA	1.055	1.062	0.007	0.66
NORTH DAKOTA	0.906	0.912	0.006	0.63
ANAHEIM/SANTA ANA, CA	1.090	1.097	0.007	0.63
REST OF ILLINOIS	0.933	0.939	0.006	0.60
SUBURBAN CHICAGO, IL	1.048	1.054	0.006	0.57
METROPOLITAN PHILADELPHIA, PA	1.059	1.065	0.006	0.56
FORT WORTH, TX	0.978	0.983	0.005	0.55
OKLAHOMA	0.908	0.913	0.005	0.52
NEW MEXICO	0.935	0.940	0.005	0.49
WEST VIRGINIA	0.925	0.929	0.004	0.39
VIRGINIA	0.946	0.950	0.004	0.37
REST OF WASHINGTON	0.968	0.971	0.003	0.35
REST OF CALIFORNIA	1.007	1.010	0.003	0.32
ARKANSAS	0.886	0.889	0.003	0.32

ADDENDUM F.—PROPOSED 2002 VERSUS 1999 GEOGRAPHIC ADJUSTMENT FACTORS (GAF)—Continued

[In Descending Order of Difference]

Locality	1999 GAF	2002 GAF	Difference	Percent difference
WISCONSIN	0.955	0.957	0.002	0.26
MONTANA	0.910	0.912	0.002	0.19
AUSTIN, TX	0.985	0.986	0.001	0.14
DELAWARE	1.015	1.016	0.001	0.12
MISSISSIPPI	0.900	0.901	0.001	0.08
IOWA	0.912	0.913	0.001	0.08
KENTUCKY	0.923	0.924	0.001	0.07
REST OF TEXAS	0.929	0.930	0.001	0.07
DC + MD/VA SUBURBS	1.095	1.095	−0.000	−0.02
IDAHO	0.913	0.912	−0.001	−0.14
REST OF OREGON	0.934	0.933	−0.001	−0.15
NEW ORLEANS, LA	0.986	0.984	−0.002	−0.17
ARIZONA	0.994	0.991	−0.003	−0.27
NYC SUBURBS/LONG I., NY	1.177	1.173	−0.004	−0.30
ALABAMA	0.930	0.927	−0.003	−0.36
REST OF MAINE	0.934	0.931	−0.003	−0.36
CHICAGO, IL	1.084	1.080	−0.004	−0.38
OHIO	0.973	0.968	−0.005	−0.47
MANHATTAN, NY	1.227	1.221	−0.006	−0.47
REST OF GEORGIA	0.940	0.936	−0.004	−0.47
PUERTO RICO	0.794	0.790	−0.004	−0.47
BALTIMORE/SURR. CNTYS, MD	1.031	1.025	−0.006	−0.57
VIRGIN ISLANDS	0.997	0.991	−0.006	−0.57
EAST ST. LOUIS, IL	0.989	0.983	−0.006	−0.57
REST OF NEW YORK	0.973	0.967	−0.006	−0.57
KANSAS	0.933	0.928	−0.005	−0.58
CONNECTICUT	1.100	1.093	−0.007	−0.65
REST OF LOUISIANA	0.936	0.930	−0.006	−0.68
BRAZORIA, TX	1.005	0.997	−0.008	−0.77
METROPOLITAN KANSAS CITY, MO	0.982	0.974	−0.008	−0.77
REST OF MARYLAND	0.980	0.972	−0.008	−0.77
HOUSTON, TX	1.034	1.025	−0.009	−0.86
NEW HAMPSHIRE	1.008	0.999	−0.009	−0.86
GALVESTON, TX	1.000	0.991	−0.009	−0.87
REST OF FLORIDA	0.981	0.972	−0.009	−0.88
POUGHKPSIE/N NYC SUBURBS, NY	1.056	1.046	−0.010	−0.94
SOUTHERN MAINE	0.987	0.977	−0.010	−0.97
QUEENS, NY	1.167	1.156	−0.011	−0.98
FORT LAUDERDALE, FL	1.046	1.033	−0.013	−1.23
RHODE ISLAND	1.047	1.033	−0.014	−1.33
BEAUMONT, TX	0.973	0.959	−0.014	−1.39
ALASKA	1.131	1.115	−0.016	−1.44
LOS ANGELES, CA	1.104	1.088	−0.016	−1.46
METROPOLITAN ST. LOUIS, MO	0.983	0.965	−0.018	−1.79
REST OF MISSOURI	0.908	0.890	−0.018	−2.00
REST OF MICHIGAN	1.013	0.990	−0.023	−2.24
MIAMI, FL	1.105	1.079	−0.026	−2.36
HAWAII/GUAM	1.072	1.046	−0.026	−2.42
DETROIT, MI	1.131	1.095	−0.036	−3.20

Addendum G—Technical Addendum To The April 1999 Report On The Development Of Resource Based Malpractice Relative Value Units Prepared By KPMG

Table of Contents

Executive Summary

E.1. Changes in This Update of the Resource Based Malpractice Relative Value Units
E.2. Impact by Physician Specialty
E.3. Impact by Class of Procedure

Background

B.1. Background of the Malpractice RVU
B.2. Malpractice Insurance Premium Rate Survey

Methodology

M.1. Overview
M.2. Mapping of Medicare Specialties to ISO Codes
M.3. Calculating the National Average Specialist Premiums
M.4. Specialist Risk Factors
Surgical Codes vs. Non Surgical codes
Obstetrical Codes
Obstetrics/Gynecology Risk Factors
Spinal Surgeries
Invasive Cardiology Procedures
Risk Factor Assignment Algorithm
M.5. Physician Profile Dataset
M.6. Calculating Average Risk Factors by Procedure
M.7. Codes Whose RBMRVUS were not Assigned Using the Risk Factor Algorithms
M.8. Budget Neutrality Adjustment
M.9. Numerical Example

Executive Summary

E.1. Changes in This Update of the Resource Based Malpractice Relative Value Units

This addendum to the original April 1999 Report on Resource Based Malpractice Relative Value Units (RBMRVUs) describes the first update to the RBMRVUs. The Original Report converted the Malpractice Relative

Value Units (RVUs) to a resource basis from a charge basis and was the source of the 2000 Malpractice RVUs. The conversion was accomplished by deriving physician specialty surgical and non-surgical risk factors from Malpractice premium and rating data. These risk factors were than used to calculate RBMRVUs by procedure based on the composition of physician specialties performing the procedure.

The changes included in this update are as follows:

- 1996–98 Malpractice Premium Data replaces 1993–95 Malpractice Premium Data.
- Where premium data was not available, KPMG consulted the rating manuals of 5 physician malpractice insurers as opposed to using just St. Paul's manual.
- In the Original Report, Neurosurgeons had separate risk factors for surgical and non-surgical procedures. This has been changed so that the same surgical risk factor is used for all procedures performed by Neurosurgeons.
- The risk factor used for most surgical procedures performed by Neurologists and Cardiologists is now the factor for minor surgery. In the original report, the factor for major surgery was used. Pursuant to our conversation, the change was made because the surgical procedures performed by Neurologists and Cardiologists are less intensive than those performed by their surgical counterparts This change was made for all procedures except invasive Cardiology procedures, which are discussed in the following item.
- Risk factors for invasive Cardiology procedures, including Cardiac Catheterizations and Angioplasties, were established separately from risk factors for other procedures, and were based on data from the new malpractice survey for Cardiologists performing these procedures. These invasive Cardiology procedures have the following Current Procedural Terminology (CPT) Codes: 92980–92998, 93501–93536, 93600–93614, 93617–93641 and 93643–93652.
- 1999 Physician Utilization data provided by HCFA mapped to 2000 CPT codes was used as the basis for the distribution of physician specialty by procedure. The first report used 1997 utilization data mapped to 1999 CPT codes.

This addendum includes an analysis of the impact of the new risk factors and a numerical example illustrating the calculation of the CPT level RBMRVUs. This addendum has been organized according to the structure of the initial Resource Based Malpractice RVU report. Only those sections with changes have been updated.

E.2. Impact by Physician Specialty

The exhibit on pages 6–7 illustrates the impact that this update has on the various physician specialties. All figures are expressed as a percentage of total RVUs, including the impact percentages. Anesthesiologists and Pathologists derive only a small portion of their income from procedures which have explicit Malpractice Relative Value Units. The impact to Anesthesiologists and Pathologists as presented in this exhibit shows the change in the portion of their income attributable only to those codes having explicit Malpractice Relative Value Units. Total RVUs are calculated using the 2000 physician fee schedule. Other changes will take place in 2001 that may change these percentages as a percentage of total RVUs. In particular, an additional year of phasing in the Resource Based Practice Expense RVUs may have a significant impact on the Malpractice RVUs as a percentage of total RVUs by specialty. It is the intention of this exhibit to show only the isolated impact of the RBMRVU change. For this reason, other changes made in the 2001 RBRVS have not been included.

This update produces more modest changes than were originally made by converting the Malpractice RVUs from a charge basis to a resource basis. The biggest gains are for Orthopedic Surgeons (+1.1%) and Hand Surgeons (+0.7%). These changes occur for the following reasons:

- *Orthopedic Surgeons:* The 1993–95 Malpractice Survey only tracked Orthopedic Surgeons that perform spinal surgeries. In the Original Report, a reduction was made in the Orthopedic Surgical Risk Factor to reflect the possibility that the premium data in the survey might be artificially high for other Orthopedic Surgeons. The 1996–98 Malpractice Premium Survey provided additional data on this subject. When Malpractice Insurers differentiate between Orthopedic Surgeons that do and don't perform spinal surgery the differences can be substantial; however, the survey indicated that this practice is not as widespread as originally anticipated. For this reason, the average 1996–98 premium data was used as the basis for the Orthopedic Surgeons' risk factor in this update.
- *Hand Surgeons:* Orthopedic Surgeons also perform many of the surgical procedures that Hand Surgeons perform; resulting in a carry over effect to the Hand Surgeon specialty.

The biggest reductions are for Anesthesiologists (−1.3%), Nephrologists (−0.9%), and Cardiologists (−0.7%). Explanation of these losses are as follows:

- *Anesthesiologists:* Based on the 1996–98 Malpractice Survey, Anesthesiologists' premiums are decreasing at the fastest rate (3.75% per year). Because Anesthesiologists receive very little of their Medicare fees from the Malpractice RVUs in this update, this change impacts them less than the −1.3% change would imply.
- *Nephrologists:* Nephrologists are not tracked in the survey; their risk factor was based on the St. Paul's underwriting manual in the original RBMRVU report. This update uses five separate underwriting manuals (although only four had risk factors for Nephrologists). St. Paul's assigns Nephrologists the highest risk factor of the four, and was the only insurer to have separate factors for surgical and non-surgical.
- *Cardiologists:* Cardiologists have been impacted by the reduction in the risk factor for invasive Cardiology procedures. Our new RBMRVUs for these procedures used risk factors appropriate for Cardiologists performing these procedures.

IMPACT ANALYSIS BY MEDICARE SPECIALTY CODE

[All Figures Expressed as a Percentage of Total RVUs]

Spclty code	Medicare description	Resource-based RBMRVUs by year		Impact from 2000 to 2001*
		2000	2001	
01	General practice	2.6%	2.7%	+0.1%
02	General surgery	4.5%	4.5%	+0.1%
03	Allergy/Immunology	3.9%	4.0%	+0.1%

IMPACT ANALYSIS BY MEDICARE SPECIALTY CODE—Continued

[All Figures Expressed as a Percentage of Total RVUs]

Spclty code	Medicare description	Resource-based RBMRVUs by year		Impact from 2000 to 2001*
		2000	2001	
04	Otolaryngology	3.3%	3.4%	+0.1%
05	Anesthesiology	4.9%	3.6%	−1.3%
06	Cardiology	3.6%	2.9%	−0.7
07	Dermatology	2.4%	2.5%	+0.1%
08	Family practice	2.3%	2.5%	+0.2%
10	Gastroenterology	2.9%	2.7%	−0.2%
11	Internal medicine	2.5%	2.5%	+0.0%
12	Osteopathic manipulative therapy	2.5%	2.6%	+0.1%
13	Neurology	2.7%	2.8%	+0.0%
14	Neurosurgery	6.4%	7.0%	+0.6%
16	Obstetrics/Gynecology	3.1%	3.6%	+0.5%
18	Ophthalmology	2.0%	1.9%	−0.1%
19	Oral surgery (dentists only)	3.1%	3.3%	+0.2%
20	Orthopedic surgery	4.0%	5.1%	+1.1%
22	Pathology	1.9%	2.5%	+0.6%
24	Plastic and reconstructive surgery	3.7%	3.9%	+0.2%
25	Physical medicine and rehab	2.6%	2.5%	−0.1%
26	Psychiatry	2.0%	1.9%	−0.1%
28	Colorectal surgery (formerly proctology)	4.0%	3.7%	−0.2%
29	Pulmonary disease	2.6%	2.6%	+0.1%
30	Diagnostic radiology	3.4%	3.6%	+0.2%
33	Thoracic surgery	5.4%	5.3%	−0.1%
34	Urology	2.8%	3.0%	+0.2%
35	Chiropractic	1.8%	1.8%	0.0%
36	Nuclear medicine	3.4%	3.4%	+0.0%
37	Pediatric medicine	2.9%	2.9%	+0.0%
38	Geriataric medicine	2.4%	2.4%	+0.1%
39	Nephrology	3.2%	2.2%	−0.9%
40	Hand surgery	3.6%	4.3%	+0.7%
41	Optometrist	1.8%	1.6%	−0.2%
44	Infectious disease	2.6%	2.6%	+0.0%
46	Endocrinology	2.4%	2.5%	+0.1%
48	Podiatry	3.1%	3.0%	−0.1%
62	Psychologist	6.3%	6.2%	−0.1%
64	Audiologist	7.1%	7.1%	+0.0%
65	Physical therapist	2.9%	2.6%	−0.3%
66	Rheumatology	2.4%	2.7%	+0.3%
67	Occupational therapist	3.0%	2.7%	−0.3%
68	Clinical psychologist	2.5%	2.2%	−0.3%
69	Clinical lab	2.4%	2.8%	+0.4%
70	Multispecialty clinic or group practice	3.1%	3.1%	0.0%
76	Peripheral vascular disease	4.7%	4.7%	+0.0%
77	Vascular surgery	5.3%	5.2%	0.0%
78	Cardiac surgery	5.6%	5.4%	−0.1%
79	Addiction medicine	2.2%	2.2%	0.0%
81	Critical care	2.8%	2.8%	−0.1%
82	Hematology	2.7%	2.7%	+0.1%
83	Hematology/oncology	2.8%	2.9%	+0.1%
84	Preventive medicine	2.6%	2.6%	+0.0%
85	Maxillofacial Surgery	3.4%	3.6%	+0.2%
86	Neuropsychiatry	2.3%	2.3%	−0.1%
90	Medical oncology	2.9%	3.0%	+0.1%
91	Surgical oncology	4.0%	4.3%	+0.3%
92	Radiation oncology	3.3%	3.5%	+0.3%
93	Emergency Medicine	4.3%	4.2%	−0.1%
94	Interventional Radiology	3.3%	3.4%	+0.1%
95	Independent physiological lab	5.0%	5.0%	0.0%
97	Physician assistant	2.2%	2.3%	+0.1%
98	Gynecologist/oncologist	3.5%	4.0%	+0.6%
	Total	3.0%	3.0%	+0.0

*Rounding may create the appearance of arithmetic errors.

E.3. Impact by Class of Procedure

The exhibit on pages 9–11 shows the impact that the proposed update to the RBMRVUs will have on different types of procedures. All figures are again expressed as a percentage of total RVUs including the impact percentages. The largest increases are for Maternity (+2.0%), Musculoskeletal surgeries

(+1.4%) and Female Genital surgeries (+1.2%). (Cytogenic Studies also increase +1.3%; however, utilization is very small and there is only one CPT code in this range 88230–88299 that uses RVUs: 88291). Following is an explanation of these gains:

• *Musculoskeletal Surgeries:* These surgeries tend to be performed by Orthopedic Surgeons. Since Orthopedic Surgeons' risk factors increased, the Malpractice RVUs for these codes have also increased.

• *Maternity:* RVUs for maternity procedures are linked to the risk factor selected for Obstetrics. This is not a specialty tracked in the physician malpractice survey—the risk factor was assigned by reviewing rating manuals. The five malpractice insurers' manuals showed an increased risk factor was needed for Obstetrics.

• *Female Genital Surgeries:* Similar to Obstetrics, the five malpractice insurers' manuals showed that an increase was needed in the surgical risk factor for Gynecologists.

The largest decreases were for Dialysis (−1.6%) and Medical Cardiovascular procedures (−1.4%).

Following is an explanation of these reductions:

• *Dialysis:* The RVUs decreased because of the decrease in risk factor for Nephrologists.

• *Medical Cardiovascular:* These procedures include the invasive Cardiology procedures mentioned in the previous section for Cardiologists. The risk factor for Cardiologists was reduced, and the resulting RVUs for these procedures are more reflective of actual insurer practice.

IMPACT ANALYSIS BY PROCEDURE TYPE

[All Figures Expressed as a Percentage of Total RVUs]

Type	Resource-based RBMRVUs by year		Impact by year
	2000	2001	2000 to 2001*
Surgical:			
Auditory System	3.2%	3.2%	+0.0%
Cardiovascular System	5.7%	5.3%	−0.4%
Digestive System	4.3%	4.1%	−0.3%
Endocrine System	5.2%	5.4%	+0.1%
Eye and Ocular Adnexa	2.0%	2.1%	+0.0%
Female Genital System	4.3%	5.5%	+1.2%
Hemic and Lymphatic Systems	4.9%	5.2%	+0.3%
Integumentary System	3.4%	3.3%	0.0%
Male Genital System	3.1%	3.3%	+0.2%
Maternity Care and Delivery	8.1%	10.1%	+2.0%
Mediastinum and Diaphragm	5.5%	5.4%	0.0%
Muskuloskeletal System	4.6%	6.0%	+1.4%
Nervous System	7.2%	6.8%	−0.5%
Operating Microscope	10.8%	9.8%	−0.9%
Respiratory System	4.0%	4.0%	0.0%
Urinary System	3.1%	3.3%	+0.2%
Subtotal	4.1%	4.2%	+0.1%
E&M:			
Care Plan Oversight Services	2.2%	2.2%	0.0%
Consultations	2.8%	3.0%	+0.2%
Critical Care Services	2.8%	2.8%	0.0%
Domiciliary, Rest Home or Custodial Care	2.2%	2.1%	0.0%
Emergency Department Services	4.5%	4.3%	−0.1%
Home Services	2.3%	2.3%	+0.0%
Hospital Inpatient Services	2.4%	2.4%	0.0%
Hospital Observation	2.6%	2.6%	0.0%
Neonatal Intensive Care	2.6%	3.0%	+0.3%
Newborn Care	1.9%	2.0%	+0.1%
Nursing Facility Services	2.3%	2.2%	0.0%
Office or Other Outpatient	1.9%	2.3%	+0.3%
Prolonged Services	2.2%	2.2%	0.0%
Subtotal	2.4%	2.5%	+0.2%
Medicine:			
Allergy and Clinical Immunology	4.7%	4.7%	0.0%
Biofeedback	2.0%	1.8%	−0.2%
Cardiovascular	4.4%	3.0%	−1.4%
Central Nervous System Tests	7.7%	7.7%	0.0%
Chemotherapy	4.6%	4.6%	+0.0%
Chiropractic Manipulative Therapy	1.8%	1.8%	0.0%
Dialysis	3.6%	2.0%	−1.6%
Gastroenterology	3.3%	3.3%	0.0%
Neurology and Neuromuscular Procedures	3.0%	2.9%	−0.2%
Non-Invasive Vascular Diagnostic Studies	6.2%	6.2%	0.0%
Opthalmology	1.7%	1.4%	−0.3%
Osteopathic Manipulative Therapy	2.1%	1.9%	−0.3%

IMPACT ANALYSIS BY PROCEDURE TYPE—Continued

[All Figures Expressed as a Percentage of Total RVUs]

Type	Resource-based RBMRVUs by year		Impact by year
	2000	2001	2000 to 2001*
Physical Medicine and Rehabilitation	2.8%	2.6%	−0.3%
Subtotal	3.4%	2.7%	−0.7%
Pathology & Lab:			
Chemistry	1.7%	1.7%	0.0%
Consultations (Clinical Pathology)	1.8%	1.9%	+0.1%
Cytogenic Studies	1.3%	2.6%	+1.3%
Cytopathology	2.1%	2.7%	+0.6%
Hematology & Coagulation	1.5%	1.6%	+0.1%
Immunology	3.4%	3.5%	+0.1%
Microbiology	1.8%	1.8%	0.0%
Other	1.8%	1.8%	0.0%
Surgical pathology	2.0%	2.6%	+0.6%
Subtotal	2.0%	2.6%	0.5%
Radiology			
Diagnostic Imaging	3.6%	3.8%	+0.2%
Diagnostic Ultrasound	3.5%	3.6%	+0.1%
Nuclear Medicine	3.6%	3.6%	+0.1%
Radiation Oncology	3.3%	3.6%	+0.3%
Subtotal	3.5%	3.7%	+0.2%

*Rounding may create the appearance of arithmetic errors.

Background

B.1. Background of the Malpractice RVU

Please see the April 1999 report on RBMRVUs for a complete description of the charge based Malpractice RVUs.

B.2. Malpractice Insurance Premium Rate Survey

The original development of Resource Based Malpractice RVUs relied upon malpractice insurance premiums for the 1993–95 period. As part of the update to the Malpractice Geographic Practice Cost Indices (GPCI) scheduled to be implemented in the 2001 fee schedule, KPMG collected physician malpractice insurance data for the 1996–98 period. One of the purposes of this addendum is to establish new specialist risk factors derived from the information collected in the most recent survey.

In order to collect the necessary premium data, 52 Departments of Insurance (DOI) from all fifty states, Washington D.C. and Puerto Rico were contacted and sent questionnaires. Each Department of Insurance was requested to supply:

- 1996–98 Premium Rates for the top Physician Malpractice Insurers doing business in the state. These premium rates had to conform to a very specific benefit plan. Annual premiums were collected and/or adjusted to the following specifications: $1 million limit on individual claims/ $3 million limit on aggregate claims, mature ''claims-made'' coverage (see Section 4.2.2. of the Third Update of the GPCI for a detailed discussion of ''claims-made'').
- Name and number of contacts at the DOI and Insurance Carriers.
- Definitions of the geographic rating areas used in the state.
- Definitions of Risk Classifications.

For the majority of states, copies of rate filings were obtained. A few states summarized this information by specialty across insurer. Some states did not have filings or could not comply with the survey in a timely manner. For these states, malpractice insurers were contacted directly.

Some states have Joint Underwriting Associations (JUAs) and Patient Compensation Funds (PCFs) that impact physician malpractice costs. The South Carolina JUA was included because it has the majority market share. All other JUAs were excluded. PCFs were included only when participation was mandatory, with one exception. In South Carolina, the PCF was included even though it is not mandatory because the majority of South Carolina physicians that participate in the JUA also participate in the PCF.

Since PCFs often provide unlimited coverage, states with mandatory PCFs may have a cost level that is higher than the $1 million/$3 million limits mentioned previously. For those states, no actuarial adjustment was made to reduce the premium level to a $1 million/$3 million policy. This was considered appropriate since the intention of the survey was to track actual physician costs as closely as possible.

Overall KPMG collected physician malpractice insurance premium data on a total of 46 companies across all 50 states, Puerto Rico, and Washington, D.C. Insurance companies that operated in more than one state are counted once in this total. In 38 states KPMG collected data from at least two companies. In the remainder of the states, KPMG received information from one company. In each of these states, the sole insurer had a medical malpractice market share of 49% or more (medical malpractice insurance includes physician and hospital malpractice insurance). On average, data was collected from insurance companies with a 56% medical malpractice market share.

There is reason to believe that the actual captured *physician* malpractice insurance market share is larger than stated here. This is due to the fact that market share statistics included hospital malpractice insurance, but companies that primarily deal in hospital

malpractice have been largely excluded. The most credible and consistently available source of medical malpractice insurance premium data comes from National Association of Insurance Commissioners (NAIC) annual statement blanks. Unfortunately, the annual statement line for medical malpractice includes both hospital and physician malpractice insurance. Departments of Insurance provided input regarding significant physician malpractice insurance carriers.

The Office of Management and Budget (OMB) approved physician malpractice survey was primarily designed to update the GPCI not the Malpractice RVU. The needs of the two updates are not the same. While the GPCI focuses on regional cost differences, the ideal Malpractice RVU survey would provide more detail on premium variations by specialty. In accordance with the OMB approved survey, malpractice data was collected for twenty physician specialties. (There are over 90 HCFA specialty codes.) Since the amount of time it takes to perform the survey is a critical component of OMB approval, the number of specialties tracked in the survey has not been changed. In order to supplement the premium survey, five rating manuals were used from among the largest malpractice insurers in order to derive risk factors for specialties not tracked in the survey. Even for the twenty specialties tracked in the survey, it was necessary to supplement the premium data with risk factors from the selected five insurers. Since the survey specified the level of surgical involvement for a specialty, it was not possible to get a surgical and non-surgical risk factor from the same premium data.

Typically malpractice insurers sub-divide each specialty into three separate levels of surgical involvement:

1. Major Surgery
2. Minor Surgery (typically assisting the surgeon or performing very minor surgeries)
3. No Surgery

The surgical risk factors are derived from the highest level of surgical involvement listed for the specialty in the insurers rating manual, typically the ''major surgery'' category. The non-surgical factors are derived from the lowest level of surgical involvement listed, typically the ''no surgery'' factors. For those surveyed specialties that had minor surgical involvement, the premium data was used as a reasonability check with the selected surgical and non-surgical risk factors. The minor surgery premium risk factor should fall between the surgical and non-surgical factors and should also be in line with the minor surgery risk factor of the median or most representative rating manual.

For Cardiologists and Neurologists, the minor surgery premium average was also used to set the surgical risk factors. This is due to the fact that the surgical procedures that these specialties perform tend to fit the minor surgery category.

One American Medical Association (AMA) suggestion regarding the first calculation of the RBMRVUs was their desire that surgical specialties always be granted their surgical risk factor even for the non-surgical procedures that they perform. This change has been incorporated in this update of the risk factors for specialties defined as surgeons. The two specialties impacted by this change are Neurosurgeons and Surgical Oncologists.

In the first RBMRVU calculation, Neurologists and Neurosurgeons shared surgical and non-surgical risk factors. This was not inconsistent with the St. Paul's rating manual. Neurosurgeons received higher Malpractice RVU compensation because they performed more surgical procedures. However, the surgical risk factor for Neurosurgeons is now used to calculate the malpractice RVUs for all procedures they perform—surgical and non-surgical. As noted above, Neurologists receive the minor surgery risk factor for the surgical procedures they perform.

In the original report, Surgical Oncologists were mapped to the Avg. Physician risk factors with separate surgical and non-surgical risk factors. In this update, Surgical Oncologists are given the General Surgeons' risk factors which are the same for surgical and non-surgical procedures.

The following table (A–1) shows how the premium data was used for each of the twenty tracked physician specialties (note that any risk factor that is not calculated using premium data from the survey was derived from the rating manual risk factors):

TABLE A–1.—USES OF THE PHYSICIAN MALPRACTICE PREMIUM DATA COLLECTED IN THE SURVEY

Specialty	Surgery	Used for surgical RF?	Used for non-surgical RF?	Used for reasonability check?
Ophthalmology	Major	Yes	No	Yes.
General Surgery	Major	Yes	Yes	Yes.
Thoracic Surgery	Major	Yes	Yes	Yes.
Urology Surgery	Major	Yes	Yes	Yes.
Anesthesiology	Major	Yes	Yes	Yes.
Neurosurgery	Major	Yes	Yes	Yes.
Orthopedic Surgery	Major	Yes	Yes	Yes.
Plastic Surgery	Major	Yes	Yes	Yes.
Otorhinolaryngology	Major	Yes	No	Yes.
Gynecology	None	No	Yes	Yes.
Psychiatry	None	No	Yes	Yes.
Pulmonary Disease	None	Yes	Yes	Yes.
Gastroenterology	Minor	No	No	Yes.
Radiology	Minor	Yes	Yes	Yes.
Cardiovascular Disease	Minor	Yes	No	Yes.
Dermatology	Minor	No	No	Yes.
Internal Medicine	Minor	No	No	Yes.
Neurology	Minor	Yes	No	Yes.
Pathology	Minor	Yes	Yes	Yes.
General/Family Practice	Minor	No	No	Yes.

Methodology

M.1. Overview

Please see the Final Report on the Resource Based Malpractice RVUs for a complete overview of the methodology. This update only describes changes to the original methodology. The following changes are being implemented in this update:

- 1996–98 Malpractice Premium Data is used in place of 1993–95 Premium Data.
- Physician premium data from the survey is used to calculate risk factors according to Table A–1 of this update.
- The premium weighted average risk factors of five selected Malpractice Insurers are used. They are Continental Casualty Company (CNA), St. Paul Fire and Marine Insurance Company (St. Paul), Medical Liability Mutual Insurance Company (MLMIC), Medical Protective Company (Medical Protective), and Doctors Company. These five insurers are among the largest malpractice insurers. This is the methodology used for all specialties that are not based on malpractice premium data.

M.2. Mapping of Medicare Specialties to ISO Codes

Please see the April 1999 Report on RBMRVUs for a complete discussion of malpractice insurer's ISO codes and how they are translated into Medicare Physician Specialty Codes.

M.3. Calculating the National Average Specialist Premiums

Please see section M.3. of the Final Report on the Resource Based Malpractice RVUs for a complete discussion of methodology. One of the adjustments described in that report ''normalizes'' the premium data in the survey for the geographic spread of specialties. A geographic bias is measured by calculating the average Malpractice GPCI that a specialty receives. Variations can be noticeable. For example, it was found that Psychiatrists have a Malpractice GPCI that is 5.6% above the average while General/Family Practitioners are 6.2% below the average. Not to adjust for this phenomenon would effectively create a ''double count'' of the geographic concentration of a given specialty. Specialties more highly concentrated in high malpractice cost areas would receive higher RVUs because their premiums would be higher, in part due to their geographic concentration in higher cost areas. At the same time they would receive a higher Malpractice GPCI for the identical reason. For specialties more highly concentrated in lower malpractice cost areas, the opposite would be true. They would be effectively ''double penalized'' for their concentration in low malpractice cost areas. By dividing each specialty's premium by its average Malpractice GPCI, risk factors developed from these new adjusted premiums more accurately reflect the relative cost differences of each specialty as opposed to the geographic dispersion of the specialty.

This normalization calculation has been updated for the risk factors used in this update. A 1998 RVU distribution was used in place of the 1997 RVU distribution used in the original report. The 2002–3 Malpractice GPCI was used as the basis for the normalization. The 2001 ''phase-in'' Malpractice GPCI was considered, but the 2002–2003 Malpractice GPCI was utilized since it will be in place longer than the 2001 Malpractice GPCI and it is unlikely that Malpractice RVUs will be updated in the interim (beyond updates for new CPT codes).

In Table A–2, the average malpractice premiums tracked in the survey are shown along with their average 2002–3 Malpractice GPCI and the adjusted premium used for risk factors. Note that Psychiatry has been normalized to a 1.31 risk factor to be consistent with the average non-surgical factor developed from the five malpractice insurers' rate manuals (see Table A–3) for Psychiatry. This makes it easier to perform an ''apples to apples'' comparison of the risk factors developed from premium data versus the comparable rating manual risk factors.

M.4. Specialist Risk Factors

Surgical Codes vs. Non Surgical Codes

Consistent with the development of the original RBMRVUs, separate surgical and non-surgical risk factors continue to be used. For the purposes of calculating RBMRVUs surgeries are defined as CPT codes falling in the range of 10000 through 69999, and codes 92980–92998, 93501–93536, 93600–93614, 93617–93641 and 93643–93652.

Obstetrical Codes

Medicare specialty codes do not distinguish between Obstetricians and Gynecologists. However, malpractice premiums can be quite different for these specialties. Because the majority of Medicare OB/GYN services will be Gynecological, a Gynecology risk factor was used for all OB/GYN procedures, except those that are clearly Obstetrical, such as maternity codes (59000–59899). These codes were assigned a risk factor that is consistent with a risk factor for an Obstetrician who performs surgery in the Original Report. This practice is continued in this addendum. The obstetrical risk factor has been updated.

Obstetrics/Gynecology Risk Factors

Obstetricians and Gynecologists have raised the concern about their average malpractice premium and their corresponding Malpractice RVUs. The survey tracked the Malpractice premium for a Gynecologist who does not perform surgery. We recognize that approximately 40% of Work RVUs paid to Gynecologists under the Medicare program are for surgical procedures. We also recognize that Obstetricians have virtually no utilization under the Medicare program and that they will pay much more for Malpractice Insurance than the typical Gynecologist.

These issues have been addressed in the risk factor methodology. First, Gynecologists receive a risk factor consistent with their Malpractice Survey Premium only for non-surgical procedures. For their surgical procedures they receive a risk factor that is 3.26 times (6.17 vs. 1.89) that which would be granted if we only used their Survey Premium. Second, Obstetricians have been handled by making an explicit adjustment to the maternity codes in order to reflect their higher malpractice costs. These codes are granted a risk factor of 10.83 (based on the rate manuals) which is 76% higher than the Gynecologists' Surgical risk factor and 461% higher than the Gynecologists' Non Surgical risk factor.

Spinal Surgeries

If the risk factor calculated for a Spinal Surgery procedure (CPTs 22100–22899) falls below the risk factor for an Orthopedic Surgeon performing Spinal Surgery (8.64), then the risk factor for an Orthopedic Surgeon performing spinal surgery is used.

Invasive Cardiology Procedures

The following codes receive the greater of their actual average risk factor or the risk factor for invasive Cardiology (3.16): 92980–92998, 93501–93536, 93600–93614, 93617–93641 and 93643–93652.

Risk Factor Assignment Algorithm

The Risk Factor Assignment Algorithm from the original report is presented in this section. Changes are indicated in bold:

Having discussed the background and issues surrounding the physician risk factors, the actual mechanics of the algorithm used to assign risk factors will now be described. The assignment algorithm was as follows:

1. The lowest normalized malpractice premium specialty was determined to be Psychiatry. This specialty was assigned a risk factor value of ''1.31''. This factor was selected to be consistent with the risk factor developed for non-surgical Psychiatry developed from rating manuals.

2. If the specialty's normalized average malpractice premium is the basis for the risk factor (as defined in Table A–1), the Risk Factor was calculated as follows:

$$\text{SPEC}_{\text{RF}} = \left(\text{NORMAL PREM}_{\text{SPEC}} / \text{NORMAL PREM}_{\text{PSYCHIATRIST}}\right) \times 1.31.$$

$$\text{NORMAL PREM}_{\text{SPEC}} = \text{PREM}_{\text{SPEC}} / \text{AVG MGPCI}_{\text{SPEC}}$$

For example, Ophthalmologists' had a 96–98 average premium of $11,209. Their average MGPCI was 0.98915. Dividing $11,209 by .98915 yields $11,332 as the normalized average premium. Dividing this result by the adjusted Psychiatrists' premium ($11,332/$6,263) gives an answer of 1.81. This 1.81 is then multiplied by 1.31 to give the final risk factor of 2.37.

3. If the risk factor was not being set with malpractice premium data, five rating manuals from among the largest malpractice insurers were consulted and an average risk factor (RF) was developed based on the market share weighted average. Using Psychiatry, non-surgical as an example: C.N.A. Weighting × C.N.A. RF + St. Paul Weighting × St. Paul RF + M.L.M.I.C. Weighting × M.L.M.I.C. RF + Medical Protective Weighting × Medical Protective Risk Factor + Doctors Weighting × Doctors Risk Factor =

25.955% × 1.50 + 25.547% × 1.00 + 20.923% × 1.00 + 14.637% × 1.33 + 12.938% × 2.00 = Note that Weightings are developed by calculating the Insurers' annual earned premium as a percent of the total for all five insurers.

M.5. Physician Profile Dataset

The April 1999 report on the RBMRVU describes this dataset. For this update, we used 1999 utilization data cross walked to 2000 CPT codes. HCFA performed this cross walk before giving the utilization data to KPMG. The most critical task performed on this data by KPMG was the application of the Modifiers to the underlying utilization data. KPMG made the conversions to the Allowed Services counts outlined in the table on the next page. The adjustments in the table are consistent with the modifier adjustments that HCFA specifies for processing physician claims.

Modifier	Description	Code type	Handling/value of code
51	Multiple Procedures	Rule applies	50%.
		Endoscopic Procedure*	100%; summary data only. Since claims history could not be taken into account endoscopies are counted 100%.
		Modifier does not apply	100%.
		No payment adjustment	100%.
54	Surgical Only	Surgery code	Intraoperative % applied.
		Non surgery code	0%.
55	Post Operative Only	Surgery code	Post Op % applied.
		Non surgery code	0%.
56	Pre Operative Only	Surgery code	Pre Op % applied.
		Non surgery code	0%.
62	Co Surgeons	Co Surgeons not permitted	0%.
		Co Surgeons permitted with or without documentation.	62.5%.
		Does not apply	0%.
80	Asst. Surgeon	Don't pay or does not apply	0%.
		Asst Surgeon permitted with or without documentation.	16%.
26	Prof. Only		100%.
TC	Technical Only		Malpractice RVUs are unchanged.
53	Terminated endoscopy		100%.

*This is more likely to distort the impact analysis rather than the average risk factor. Endoscopies will be over-weighted in the impact analysis.

M.6. Calculating Average Risk Factors by Procedure

Please see the April 1999 report for a complete description of the calculation. The formula for calculating the risk factors is stated below:

SPEC = Allergist/Immunologist through Vascular Surgeon

$$\frac{\left(\sum \text{SERVICES}_{\text{PROC/MOD, SPEC}} \times \text{RF}_{\text{SPEC}}\right)}{\text{SERVICES}_{\text{PROC/MOD}}} = \text{Avg. RF}_{\text{PROC/MOD}}$$

Where:

$SERVICES_{PROC/MOD, SPEC}$ = Number of procedures performed in 1999 by specialty for specific procedure code

RF_{SPEC}= Risk factor for specialty calculated in M.4.

$SERVICES_{PROC/MOD}$ = Number of procedures performed in 1999 for specific procedure code

Avg. $RF_{PROC/MOD}$ = The average risk factor for the particular combination of procedure and modifier code.

M.7. Codes Whose RBMRVUs were not Assigned Using the Risk Factor Algorithms

Please see table A–5 for the assignments made for codes with insufficient utilization data.

M.8. Budget Neutrality Adjustment

Please see the April 1999 report for a complete discussion. The new budget neutrality adjustment is .0171569. Note that this adjustment is applied before inclusion of the technical codes which are left unchanged.

The formula for budget neutrality and the final calculation of RBMRVUs is given below:

$$\frac{\text{2000 Aggregate MP RVUs}}{\left(\sum_{PROC=00000\text{ to }99999} SERVICES_{PROC/MOD} \times \text{RAW } RBMRVU_{PROC/MOD}\right)} = \text{BN Adj.}$$

This budget neutrality adjustment is multiplied by the Unadjusted RBMRVUs to get the final RBMRVUs.

$$RBMRVU_{PROC/MOD} = \text{Raw } RBMRVU_{PROC/MOD} \times \text{BN Adj.}$$

Where:

$SERVICES_{PROC/MOD}$ = Number of procedures performed in 1999 for specific procedure code

Raw $RBMRVU_{PROC/MOD}$ = The resource-based RVU allocation for the risk-factor method prior to adjustment for budget neutrality

2000 Aggregate MP RVUs = 2000 aggregate malpractice RVUs projected from the 1999 utilization data and 2000 malpractice RVUs

BN Adj = 2001 budget neutrality adjustment, forces RBMRVUs to be budget neutral to the 1999 experience

$RBMRVU_{PROC/MOD}$ = RBMRVU after applying 2001 budget neutrality adjustment

M.9. Numerical Example

The development of risk factors has been demonstrated in a previous section. This numerical example will focus on applying those risk factors to the Procedure Code Malpractice Relative Value Units.

This example will look at the calculation of the Resource Based Malpractice RVU for code 99213–Office/Outpatient Visit, Established Patient, and is shown on the next page. We start with raw physician specialty utilization databased on 1999 utilization and mapped to 2000 codes by the Health Care Financing Administration. In the exhibit, Column B shows the distribution of services by specialty. Column B is labeled ''Adjusted Allowed Services'' because certain modifier rules have been applied to the counts.

NUMERICAL EXAMPLE FOR CPT CODE 99213 CALCULATION OF THE AVERAGE RISK FACTOR

Code	Description	A Risk factor	B Adjusted allowed svcs	C Percent of total	D Product A X B
1	General practice	1.73	4,507,361	5.18	7,797,735
2	General surgery	6.14	1,516,808	1.74	9,313,201
3	Allergy/Immunology	1.05	306,558	0.35	321,886
4	Otolaryngology	2.31	1,484,673	1.70	3,429,595
5	Anesthesiology	3.28	289,300	0.33	948,904
6	Cardiology	1.81	5,711,251	6.56	10,337,364
7	Dermatology	1.12	1,904,507	2.19	2,133,048
8	Family practice	1.73	18,552,260	21.30	32,095,410
10	Gastroenterology	1.95	1,564,620	1.80	3,051,009
11	Internal medicine	1.89	25,202,921	28.94	47,633,521
12	Osteopathic manipulative therapy	2.19	86,452	0.10	189,330
13	Neurology	1.96	1,102,524	1.27	2,160,947
14	Neurosurgery	12.64	187,609	0.22	2,371,378
16	Obstetrics/Gynecology	1.89	822,589	0.94	1,554,693
18	Ophthalmology	1.18	3,171,237	3.64	3,742,060
19	Oral surgery (dentists only)	2.19	9,070	0.01	19,863
20	Orthopedic surgery	8.53	2,643,730	3.04	22,551,017
22	Pathology	2.07	25,423	0.03	52,626
24	Plastic and reconstructive surgery	6.57	114,446	0.13	751,910
25	Physical medicine and rehab	1.07	340,226	0.39	364,042
26	Psychiatry	1.31	91,260	0.10	119,551
28	Colorectal surgery (formerly proctolog)	3.81	52,161	0.06	198,733
29	Pulmonary disease	1.94	1,785,484	2.05	3,463,839

NUMERICAL EXAMPLE FOR CPT CODE 99213 CALCULATION OF THE AVERAGE RISK FACTOR—Continued

Code	Description	A Risk factor	B Adjusted allowed svcs	C Percent of total	D Product A X B
30	Diagnostic radiology	2.60	71,349	0.08	185,507
33	Thoracic surgery	8.14	90,142	0.10	733,756
34	Urology	3.58	3,013,435	3.46	10,788,097
36	Nuclear medicine	1.38	10,151	0.01	14,008
37	Pediatric medicine	1.75	128,072	0.15	224,126
38	Geriataric medicine	1.16	242,737	0.28	281,575
39	Nephrology	1.57	661,649	0.76	1,038,789
40	Hand surgery	5.75	32,714	0.04	188,106
41	Optometrist	2.19	629,614	0.72	1,378,855
44	Infectious disease	1.57	242,070	0.28	380,050
46	Endocrinology	1.57	689,586	0.79	1,082,650
48	Podiatry	2.19	1,392,115	1.60	3,048,732
65	Physical therapist	1.07	18	0.00	19
66	Rheumatology	1.68	1,248,991	1.43	2,098,305
67	Occupational therapist	1.08	4	0.00	4
68	Clinical psychologist	1.31	10	0.00	13
69	Clinical lab	2.07	95	0.00	197
70	Multispecialty clinic or group practice	2.19	3,515,620	4.04	7,699,208
76	Peripheral vascular disease	2.19	15,471	0.02	33,881
77	Vascular surgery	7.41	157,071	0.18	1,163,896
78	Cardiac surgery	7.93	15,718	0.02	124,644
79	Addiction medicine	1.31	9,586	0.01	12,558
81	Critical care	2.19	57,499	0.07	125,923
82	Hematology	1.62	70,854	0.08	114,783
83	Hematology/oncology	1.62	1,531,160	1.76	2,480,479
84	Preventive medicine	1.29	7,780	0.01	10,036
85	Maxillofacial surgery	6.57	4,718	0.01	30,997
86	Neuropsychiatry	1.31	2,358	0.00	3,089
90	Medical oncology	1.85	592,350	0.68	1,095,848
91	Surgical oncology	6.14	30,958	0.04	190,082
92	Radiation oncology	2.40	186,255	0.21	447,012
93	Emergency medicine	4.30	294,726	0.34	1,267,322
94	Interventional Radiology	2.68	1,908	0.00	5,113
95	Independent physiological lab	2.07	3	0.00	6
98	Gynecologist/oncologist	1.93	30,429	0.03	58,728
	SUBTOTAL FOR RISK FCTR CALCULATION	2.21	86,449,686	99.26	190,908,055
	OTHER		645,885	0.74	N/A
	TOTAL		87,095,571	100.00	

$$\text{Avg RF for this Procedure} = \frac{\text{Sum of Column D}}{\text{Sum of Column B}} = \frac{190{,}908{,}055}{86{,}449{,}686} = 2.21$$

Notice that 0.74% of the services are performed by specialties that have not had risk factors developed for them (''OTHER''). For this 99213 code, this is largely comprised of Physician Assistants and Nurse Practitioners.

The next step is to determine the average risk factor. Column D shows the product of each specialties' risk factor multiplied by the number of Allowed Services for that specialty. If we add up each specialties' product and divide by the total number of allowed services, we have calculated the average risk factor for the code. For code 99213 this is (190,908,055) / (86,449,686) = 2.21. Note that this is just an application of the following formula shown in Section M6:

$$\text{SPEC} = \text{Allergist/Immunologist through Vascular Surgeon}$$

$$\frac{\left(\sum \text{SERVICES}_{\text{PROC/MOD, SPEC}} \times \text{RF}_{\text{SPEC}}\right)}{\text{SERVICES}_{\text{PROC/MOD}}} = \text{Avg. RF}_{\text{PROC/MOD}}$$

Next we need to multiply the average risk factor for the code by the Work RVUs for the code. For code 99213 this is: 2.21 * 0.67 = 1.48. Finally the budget neutrality adjustment of .0171569 is applied to 1.48. The result is .0171569 * 1.48 = .03 Malpractice RVUs.

Attachments

Table A–2: Average Premiums, MGPCI, and Resulting Risk Factors by Specialty

Table A–3: Weighted Average Risk Factors Developed from Five Rating Manuals

Table A–4: Selected Risk Factors by HCFA Specialty

Table A–5: Cross Walk Assumptions 1

TABLE A–2.—AVERAGE PREMIUMS, MGPCI AND RESULTING RISK FACTORS BY SPECIALTY

ISO	Specialty	1996 avg	1997 avg	1998 avg	93–95	96–98	Annual trend	Avg MGPCI	Normalized 96–98***	Risk fctr***
80114	Opthalmology	$11,304	$11,377	$10,945	$10,960	$11,209	0.75%	0.989%	$11,332	2.37
80143	General surgery	27,667	28,116	27,694	27,020	27,825	0.98%	0.948	29,367	6.14
80144	Thoracic surgery	39,056	39,020	38,359	38,789	38,812	0.02%	0.997	38,919	8.14
80145	Urology	16,799	17,163	16,911	15,817	16,958	2.35%	0.991	17,116	3.58
80151	Anesthesiology	15,708	15,468	14,904	17,231	15,360	−3.75%	0.980	15,678	3.28
80152	Neurosurgery	58,104	58,263	56,735	54,610	57,701	1.85%	0.954	60,455	12.64
80154	Orthopedic surgery	39,182	38,882	37,688	38,877	38,584	−0.25%	0.946	40,774	8.53
80156	Plastic surgery	31,670	31,708	31,062	30,599	31,480	0.95%	1.002	31,415	6.57
80159	Otolaryngology	20,603	19,845	19,521	19,748	19,990	0.41%	0.989	20,212	4.23
80244	Gynecology	8,445	8,690	8,790	*n/a	8,642	*n/a	0.957	9,033	1.89
80249	Psychiatry**	6,645	6,533	6,664	7,240	6,614	−2.96%	1.056	6,263	1.31
80269	Pulmonary disease	9,352	9,553	9,620	8,594	9,508	3.42%	1.025	9,278	1.94
80274	Gastroenterology	11,691	11,890	11,655	11,008	11,745	2.18%	1.008	11,648	2.44
80280	Diagnostic radiology	12,099	12,651	12,365	10,783	12,372	4.68%	0.994	12,442	2.60
80281	Cardiology	13,265	13,367	12,980	12,465	13,204	1.94%	1.013	13,037	2.73
80282	Dermatology	10,690	10,856	10,394	10,946	10,650	−0.91%	1.037	10,272	2.15
80284	Internal medicine	11,770	11,941	11,798	11,491	11,836	0.99%	1.019	11,611	2.43
80288	Neurology	14,000	13,758	13,421	12,396	13,726	3.45%	1.029	13,335	2.79
80292	Pathology	9,633	9,690	9,439	8,913	9,587	2.46%	0.969	9,895	2.07
80423	General practice	11,181	11,354	11,167	10,465	11,234	2.39%	0.938	11,977	2.51

*Data not available.
**Psychiatry is set to 1.31 to be consistent with risk factor taken from rating manuals (see Table A–3).
***Actual precision on premium and GPCIs is greater than shown. May not be able to reproduce results exactly due to rounding.

TABLE A–3.—WEIGHTED AVERAGE RISK FACTORS DEVELOPED FROM FIVE RATING MANUALS

[Calculation of Weighted Average Risk Factors]

Code	Description	Weights--> Weighted Avg. Risk Factors		25.955% C.N.A.		25.547% St. Paul		20.923% Insurers MLMIC		14.637% Med. Prof.		12.938% Doctors	
		Non Surg	Surg	Non Surg	Surg	Non Surg	Surg	Non Surg	Surg	Non Surg	Surg	Non Surg	Surg
01	General practice	1.73	4.43	1.67	6.17	1.23	2.93	2.24	5.09	1.57	2.60	2.18	4.89
02	General surgery	6.24	6.24	6.17	6.17	4.64	4.64	8.04	8.04	5.38	5.38	7.63	7.63
03	Allergy/Immunology	1.05	1.29	1.00	1.00	1.00	1.00	1.00	1.00	1.00	2.60	1.40	1.40
04	Otolaryngology	2.31	3.92	1.00	3.58	1.23	2.93	3.59	5.09	1.33	2.60	6.12	6.12
05	Anesthesiology	3.11	3.11	3.58	3.58	2.43	2.43	3.14	3.14	3.36	3.36	3.15	3.15
06	Cardiology	1.81	2.85	1.50	3.58	1.23	1.79	2.91	2.91	1.33	2.60	2.37	3.62
	Cardiac Catheterization	3.16	3.16	3.58	3.58	2.36	2.36	3.20	3.20	3.36	3.36	3.62	3.62
07	Dermatology	1.12	2.41	1.00	1.50	1.00	4.64	1.00	1.00	1.00	2.60	1.93	1.93
08	Family practice	1.73	4.43	1.67	6.17	1.23	2.93	2.24	5.09	1.57	2.60	2.18	4.89
10	Gastroenterology	1.95	2.78	1.50	3.58	1.23	2.36	2.91	2.91	1.57	1.57	3.13	3.13
11	Internal medicine	1.89	2.53	1.67	3.58	1.23	1.79	2.91	2.91	1.57	1.57	2.37	2.37
13	Neurology	1.96	2.11	1.67	1.67	1.23	1.79	2.39	2.39	1.57	1.47	3.75	3.75
14	Neurosurgery	12.67	12.67	10.00	10.00	9.42	9.42	20.96	20.96	10.63	10.63	13.31	13.31
16	Gynecology	1.93	6.17	1.50	6.17	1.23	4.64	3.59	9.01	1.33	5.38	2.18	5.48
	Obstetrics	n/a	10.83	n/a	10.00	n/a	7.15	n/a	15.53	n/a	10.63	n/a	12.41
18	Ophthalmology	1.18	2.36	1.00	1.50	1.23	1.79	1.00	3.20	1.33	2.60	1.55	3.60
20	Orthopedic surgery wo Spinal	8.45	8.45	8.17	8.17	6.01	6.01	12.18	12.18	7.97	7.97	8.36	8.36
	Orthopedic surgery with Spinal	8.64	8.64	8.17	8.17	6.01	6.01	12.18	12.18	9.30	9.30	8.36	8.36
22	Pathology	1.57	1.77	1.50	1.50	1.00	1.79	1.81	1.81	1.57	1.57	2.43	2.43
24	Plastic Surgery	7.19	7.19	8.17	8.17	4.64	4.64	9.01	9.01	7.97	7.97	6.42	6.42
25	Physical Med & Rehab	1.07	1.07	1.00	1.00	1.23	1.23	1.00	1.00	n/a	n/a	1.00	1.00
26	Psychiatry	1.31	1.49	1.50	1.50	1.00	1.00	1.00	1.00	1.33	2.60	2.00	2.00
28	Colorectal surgery	3.81	3.81	3.58	3.58	2.36	2.36	5.09	5.09	n/a	n/a	5.02	5.02
29	Pulmonary disease	1.82	1.82	1.00	1.00	1.23	1.23	2.91	2.91	1.57	1.57	3.13	3.13
30	Diagnostic radiology	2.28	2.58	1.67	1.67	1.23	1.79	4.24	4.24	1.57	2.60	3.26	3.26
33	Thoracic surgery	7.20	7.20	6.17	6.17	6.01	6.01	8.04	8.04	9.30	9.30	7.91	7.91
34	Urology	3.59	3.59	3.58	3.58	2.36	2.36	5.09	5.09	2.60	2.60	4.71	4.71
36	Nuclear medicine	1.38	1.61	1.50	1.50	1.23	1.23	n/a	n/a	1.33	2.60	1.47	1.47
37	Pediatric medicine	1.75	4.92	1.67	6.17	1.23	4.64	n/a	n/a	n/a	n/a	2.97	2.97
38	Geriataric medicine	1.16	2.08	1.00	1.50	1.23	2.36	n/a	n/a	1.33	2.60	n/a	n/a
39	Nephrology	1.57	1.94	1.50	1.50	1.23	2.36	n/a	n/a	1.57	1.57	2.37	2.37
40	Hand surgery	5.75	5.75	6.17	6.17	4.64	4.64	n/a	n/a	5.38	5.38	7.54	7.54
44	Infectious disease	1.57	1.75	1.50	1.50	1.23	1.79	n/a	n/a	1.57	1.57	2.37	2.37
46	Endocrinology	1.57	1.94	1.50	1.50	1.23	2.36	n/a	n/a	1.57	1.57	2.37	2.37
66	Rheumatology	1.68	2.01	1.00	1.00	1.23	1.79	2.91	2.91	1.33	2.60	2.37	2.37
67	Occupational therapist	1.08	1.08	1.00	1.00	1.23	1.23	1.00	1.00	n/a	n/a	n/a	n/a
77	Vascular surgery	7.41	7.41	6.17	6.17	6.01	6.01	9.01	9.01	9.30	9.30	7.91	7.91
78	Cardiac surgery	7.93	7.93	8.17	8.17	6.01	6.01	9.01	9.01	9.30	9.30	7.91	7.91
82	Hematology	1.62	1.76	1.50	1.50	1.23	1.79	1.81	1.81	1.57	1.57	2.37	2.37
83	Hematology/oncology	1.62	1.76	1.50	1.50	1.23	1.79	1.81	1.81	1.57	1.57	2.37	2.37
84	Preventive medicine	1.29	4.43	1.00	6.17	1.23	2.93	1.00	5.09	1.57	2.60	2.18	4.89
90	Medical oncology	1.85	1.85	1.50	1.50	1.23	1.23	2.91	2.91	1.57	1.57	2.37	2.37
92	Radiation oncology	2.40	2.40	1.50	1.50	2.36	2.36	2.91	2.91	2.60	2.60	3.26	3.26
93	Emergency medicine	4.30	4.96	6.17	6.17	2.93	4.64	3.25	3.25	3.36	4.82	6.06	6.06
94	Interventional Radiology	2.68	2.68	1.50	1.50	2.36	2.36	4.24	4.24	2.60	2.60	3.26	3.26
98	Gynecologist/oncologist	1.93	6.17	1.50	6.17	1.23	4.64	3.59	9.01	1.33	5.38	2.18	5.48

TABLE A–4.—MEDICARE SPECIALTIES AND RISK FACTOR ASSIGNMENT

Code	Medical description	Non surgical risk factor	Surgical risk factor	Notes
01	General practice	1.73	4.43	Rating Manuals used.
02	General surgery	6.14	6.14	Premium data used.
03	Allergy/Immunology	1.05	1.29	Rating Manuals used.
04	Otolaryngology	2.31	4.23	Surg RF from survey, Non-Surg RF from manuals.
05	Anesthesiology	3.28	3.28	Premium data used.
06	Cardiology	1.81	2.73	Surg RF from survey, Non-Surg RF from manuals.
07	Dermatology	1.12	2.41	Rating Manuals used.
08	Family practice	1.73	4.43	Rating Manuals used.
10	Gastroenterology	1.95	2.78	Rating Manuals used.
11	Internal medicine	1.89	2.53	Rating Manuals used.
12	Osteopathic manipulative therapy	2.19	3.75	Cross walked to All Physician Average Risk Factors.
13	Neurology	1.96	2.79	Surg RF from survey, Non-Surg RF from manuals.
14	Neurosurgery	12.64	12.64	Premium data used.
16	Obstetrics/Gynecology	1.89	6.17	Surg RF from manuals, Non-Surg RF from survey.
18	Ophthalmology	1.18	2.37	Surg RF from survey, Non-Surg RF from Manuals.
19	Oral surgery (dentists only)	2.19	3.75	Cross walked to All Physician Average Risk Factors.
20	Orthopedic surgery	8.53	8.53	Premium data used.
22	Pathology	2.07	2.07	Premium data used.
24	Plastic and reconstructive surgery	6.57	6.57	Premium data used.
25	Physical medicine and rehab	1.07	1.07	Rating Manuals used.
26	Psychiatry	1.31	1.49	Surg RF from manuals, Non-Surg RF from survey.
28	Colorectal surgery (formerly proctology)	3.81	3.81	Rating Manuals used.
29	Pulmonary disease	1.94	1.94	Premium data used.
30	Diagnostic radiology	2.60	2.60	Premium data used.
33	Thoracic surgery	8.14	8.14	Premium data used.
34	Urology	3.58	3.58	Premium data used.
35	Chiropractic	1.89	2.53	Cross walked to Internal Medicine Risk Factor.
36	Nuclear medicine	1.38	1.61	Rating Manuals used.
37	Pediatric medicine	1.75	4.92	Rating Manuals used.
38	Geriataric medicine	1.16	2.08	Rating Manuals used.
39	Nephrology	1.57	1.94	Rating Manuals used.
40	Hand surgery	5.75	5.75	Rating Manuals used.
41	Optometrist	2.19	3.75	Cross walked to All Physician Average Risk Factors.
44	Infectious disease	1.57	1.75	Rating Manuals used.
46	Endocrinology	1.57	1.94	Rating Manuals used.
48	Podiatry	2.19	3.75	Cross walked to All Physician Average Risk Factors.
62	Psychologist	1.31	1.49	Cross walked to Psychiatrists' Risk Factors.
65	Physical Therapist	1.07	1.07	Cross walked to Physical Med. & Rehab Risk Factors.
66	Rheumatology	1.68	2.01	Rating Manuals used.
67	Occupational therapist (independently practicing)	1.08	1.08	Rating Manuals used.
68	Clinical psychologist	1.31	1.49	Cross walked to Psychiatrists' Risk Factors.
69	Clinical lab	2.07	2.07	Cross walked to Pathologists' Risk Factors.
70	Multispecialty clinic or group practice	2.19	3.75	Cross walked to All Physician Average Risk Factors.
76	Peripheral vascular disease	2.19	3.75	Cross walked to All Physician Average Risk Factors.
77	Vascular surgery	7.41	7.41	Rating Manuals used.
78	Cardiac surgery	7.93	7.93	Rating Manuals used.
79	Addiction medicine	1.31	1.49	Cross walked to Psychiatrists' Risk Factors.
81	Critical care	2.19	3.75	Cross walked to All Physician Average Risk Factors.
82	Hematology	1.62	1.76	Rating Manuals used.
83	Hematology/oncology	1.62	1.76	Rating Manuals used.
84	Preventive medicine	1.29	4.43	Rating Manuals used.
85	Maxillofacial surgery	6.57	6.57	Cross walked to Plastic Surgeons' Risk Factors.
86	Neuropsychiatry	1.31	1.49	Cross walked to Psychiatrists' Risk Factors.
90	Medical oncology	1.85	1.85	Rating Manuals used.
91	Surgical Oncology	6.14	6.14	Cross walked to General Surgeons' Risk Factors.
92	Radiation oncology	2.40	2.40	Rating Manuals used.
93	Emergency medicine	4.30	4.96	Rating Manuals used.
94	Interventional Radiology	2.68	2.68	Rating Manuals used.
95	Independent physiological lab	2.07	2.07	Cross walked to Pathologists' Risk Factors.
98	Gynecologist/oncologist	1.93	6.17	Rating Manuals used.

EXHIBIT A–5.—CROSS WALK ASSUMPTIONS

HCPCS	MOD	Description	Status	Cross walk assumption		
				HCPCS	MOD	Description
11975		Insert contraceptive cap	N	11976		Removal of contraceptive cap.
11977		Removal/reinsert contra cap	N	11976		Removal of contraceptive cap.
11980		Implant hormone pellet(s)	A	XXXXX		AVG SURGICAL.
13300		Repair of wound or lesion	D	13102		Repair wound/lesion add-on.
15580		Attach skin pedicle graft	D	15574		Form skin pedicle flap.
15625		Skin graft	D	15350		Skin homograft.
15775		Hair transplant punch grafts	R	15776		Hair transplant punch grafts.
15850		Removal of sutures	B	15851		Removal of sutures.
20979		Us bone stimulation	N	XXXXX		Interventional Radiology.
21077		Prepare face/oral prosthesis	A	21076		Prepare face/oral prosthesis.
21083		Prepare face/oral prosthesis	A	21076		Prepare face/oral prosthesis.
21127		Augmentation, lower jaw bone	A	21125		Augmentation, lower jaw bone.
21155		Reconstruct midface, lefort	A	21154		Reconstruct midface, lefort.
21159		Reconstruct midface, lefort	A	21154		Reconstruct midface, lefort.
21263		Revise eye sockets	A	21260		Revise eye sockets.
24931		Amputate upper arm & implant	A	24900		Amputation of upper arm.
25455		Revision of wrist joint	A	25450		Revision of wrist joint.
26504		Hand tendon reconstruction	A	26500		Hand tendon reconstruction.
26551		Great toe-hand transfer	A	XXXXX		Orthopedic Surgeon.
26554		Double transfer, toe-hand	A	XXXXX		Orthopedic Surgeon.
26556		Toe joint transfer	A	XXXXX		Orthopedic Surgeon.
27734		Repair lower leg epiphyses	A	27730		Repair of tibia epiphysis.
32001		Total lung lavage	D	32997		Total lung lavage.
33242		Repair pulse generator/leads	D	33218		Revise eltrd pacing-defib.
33247		Insert/replace leads	D	33216		Revise eltrd pacing-defib.
33506		Repair artery, translocation	A	33502		Coronary artery correction.
33688		Repair heart septum defect	A	33684		Repair heart septum defect.
33710		Repair of heart defects	A	33702		Repair of heart defects.
33771		Repair great vessels defect	A	33770		Repair great vessels defect.
33774		Repair great vessels defect	A	33770		Repair great vessels defect.
33775		Repair great vessels defect	A	33770		Repair great vessels defect.
33776		Repair great vessels defect	A	33770		Repair great vessels defect.
33777		Repair great vessels defect	A	33770		Repair great vessels defect.
33778		Repair great vessels defect	A	33770		Repair great vessels defect.
33781		Repair great vessels defect	A	33770		Repair great vessels defect.
33918		Repair pulmonary atresia	A	33917		Repair pulmonary atresia.
33968		Remove aortic assist device	A	33971		Aortic circulation assist.
36550		Declot vascular device	A	36533		Insertion of access device.
42210		Reconstruct cleft palate	A	42205		Reconstruct cleft palate.
42227		Lengthening of palate	A	42226		Lengthening of palate.
42509		Parotid duct diversion	A	42507		Parotid duct diversion.
42835		Removal of adenoids	A	42830		Removal of adenoids.
46742		Repair of imperforated anus	A	46753		Reconstruction of anus.
46746		Repair of cloacal anomaly	A	46744		Repair of cloacal anomaly.
46748		Repair of cloacal anomaly	A	46744		Repair of cloacal anomaly.
46751		Repair of anal sphincter	A	46753		Reconstruction of anus.
47136		Transplantation of liver	R	47130		Partial removal of liver.
49611		Repair umbilical lesion	A	49610		Repair umbilical lesion.
50526		Repair renal-abdomen fistula	A	50525		Repair renal-abdomen fistula.
54316		Reconstruction of urethra	A	54322		Reconstruction of urethra.
54901		Fusion of spermatic ducts	A	54900		Fusion of spermatic ducts.
56300		Laparoscopy; diagnostic	D	49320		Diag laparo separate proc.
56301		Laparoscopy; tubal cautery	D	58670		Laparoscopy, tubal cautery.
56302		Laparoscopy; tubal block	D	58671		Laparoscopy, tubal block.
56303		Laparoscopy; excise lesions	D	58662		Laparoscopy, excise lesions.
56304		Laparoscopy; lysis	D	58660		Laparoscopy, lysis.
56305		Laparoscopy; biopsy	D	49321		Laparoscopy, biopsy.
56306		Laparoscopy; aspiration	D	49322		Laparoscopy, aspiration.
56307		Laparoscopy; remove adnexa	D	58661		Laparoscopy, remove adnexa.
56308		Laparoscopy; hysterectomy	D	58550		Laparo-asst vag hysterectomy.
56309		Laparoscopy; remove myoma	D	58551		Laparoscopy, remove myoma.
56310		Laparoscopic enterolysis	D	44200		Laparoscopy, enterolysis.
56311		Laparoscopic lymph node biop	D	38570		Laparoscopy, lymph node biop.
56312		Laparoscopic lymphadenectomy	D	38571		Laparoscopy, lymphadenectomy.
56313		Laparoscopic lymphadenectomy	D	38572		Laparoscopy, lymphadenectomy.
56314		Lapar; drain lymphocele	D	49323		Laparo drain lymphocele.
56315		Laparoscopic appendectomy	D	44970		Laparoscopy, appendectomy.
56316		Laparoscopic hernia repair	D	49650		Laparo hernia repair initial.
56317		Laparoscopic hernia repair	D	49651		Laparo hernia repair recur.
56318		Laparoscopic orchiectomy	D	54690		Laparoscopy, surgical; orchiectomy.

EXHIBIT A–5.—CROSS WALK ASSUMPTIONS—Continued

HCPCS	MOD	Description	Status	Cross walk assumption		
				HCPCS	MOD	Description
56320		Laparoscopy, spermatic veins	D	55550		Laparo ligate spermatic vein.
56322		Laparoscopy, vagus nerves	D	43651		Laparoscopy, vagus nerve.
56323		Laparoscopy, vagus nerves	D	43652		Laparoscopy, vagus nerve.
56324		Laparoscopy, cholecystoenter	D	47570		Laparo cholecystoenterostomy.
56340		Laparoscopic cholecystectomy	D	47562		Laparoscopic cholecystectomy.
56341		Laparoscopic cholecystectomy	D	47563		Laparo cholecystectomy/graph.
56342		Laparoscopic cholecystectomy	D	47564		Laparo cholecystectomy/explr.
56343		Laparoscopic salpingostomy	D	58673		Laparoscopy, salpingostomy.
56344		Laparoscopic fimbrioplasty	D	58672		Laparoscopy, fimbrioplasty.
56346		Laparoscopic gastrostomy	D	43653		Laparoscopy, gastrostomy.
56348		Laparo; resect intestine	D	44202		Laparo, resect intestine.
56349		Laparoscopy; fundoplasty	D	43280		Laparoscopy, fundoplasty.
56350		Hysteroscopy; diagnostic	D	58555		Hysteroscopy, dx, sep proc.
56351		Hysteroscopy; biopsy	D	58558		Hysteroscopy, biopsy.
56352		Hysteroscopy; lysis	D	58559		Hysteroscopy, lysis.
56353		Hysteroscopy; resect septum	D	58560		Hysteroscopy, resect septum.
56354		Hysteroscopy; remove myoma	D	58561		Hysteroscopy, remove myoma.
56355		Hysteroscopy; remove impact	D	58562		Hysteroscopy, remove fb.
56356		Hysteroscopy; ablation	D	58563		Hysteroscopy, ablation.
56362		Laparoscopy w/cholangio	D	47560		Laparoscopy w/cholangio.
56363		Laparoscopy w/biopsy	D	47561		Laparo w/cholangio/biopsy.
58300		Insert intrauterine device	N	58301		Remove intrauterine device.
58970		Retrieval of oocyte	A	XXXXX		Gynecologist.
58976		Transfer of embryo	A	XXXXX		Gynecologist.
61544		Remove & treat brain lesion	A	61533		Implant brain electrodes.
61609		Transect artery, sinus	A	XXXXX		Neurosurgeon.
61611		Transect artery, sinus	A	XXXXX		Neurosurgeon.
61855		Implant neuroelectrodes	D	61862		Implant neurostimul, subcort.
61865		Implant neuroelectrodes	D	61862		Implant neurostimul, subcort.
61885		Implant neurostim one array	A	XXXXX		Neurosurgeon.
62115		Reduction of skull defect	A	XXXXX		Neurosurgeon.
62274		Inject spinal anesthetic	D	62310		Inject spine c/t.
62275		Inject spinal anesthetic	D	62310		Inject spine c/t.
62276		Inject spinal anesthetic	D	62318		Inject spine w/cath, c/t.
62277		Inject spinal anesthetic	D	62318		Inject spine w/cath, c/t.
62278		Inject spinal anesthetic	D	62311		Inject spine l/s (cd).
62279		Inject spinal anesthetic	D	62319		Inject spine w/cath l/s (cd).
62288		Injection into spinal canal	D	62310		Inject spine c/t.
62289		Injection into spinal canal	D	62311		Inject spine l/s (cd).
62298		Injection into spinal canal	D	62310		Inject spine c/t.
63196		Incise spinal column & cord	A	63197		Incise spinal column & cord.
63198		Incise spinal column & cord	A	63197		Incise spinal column & cord.
63199		Incise spinal column & cord	A	63197		Incise spinal column & cord.
64440		Injection for nerve block	D	64479		Inj foramen epidural c/t.
64441		Injection for nerve block	D	64480		Inj foramen epidural add-on.
64442		Injection for nerve block	D	64475		Inj paravertebral l/s.
64443		Inject, nerve block add-on	D	64476		Inj paravertebral l/s add-on.
64862		Repair of low back nerves	A	64861		Repair of arm nerves.
64870		Fusion of facial/other nerve	A	64866		Fusion of facial/other nerve.
64876		Repair nerve/shorten bone	A	64874		Repair & revise nerve add-on.
77419		Weekly radiation therapy	D	77427		Radiation tx management, x5.
77420		Weekly radiation therapy	D	77427		Radiation tx management, x5.
77425		Weekly radiation therapy	D	77427		Radiation tx management, x5.
77430		Weekly radiation therapy	D	77427		Radiation tx management, x5.
78351		Bone mineral, dual photon	N	78350		Bone mineral, single photon.
89136		Sample stomach contents	A	89135		Sample stomach contents.
90875		Psychophysiological therapy	N	XXXXX		PSYCHIATRY.
90876		Psychophysiological therapy	N	XXXXX		PSYCHIATRY.
90885		Psy evaluation of records	B	XXXXX		PSYCHIATRY.
90887		Consultation with family	B	XXXXX		PSYCHIATRY.
92015		Refraction	N	XXXXX		OPTHALMOLOGY.
92352		Special spectacles fitting	B	XXXXX		OPTOMETRIST.
92353		Special spectacles fitting	B	XXXXX		OPTOMETRIST.
92354		Special spectacles fitting	B	XXXXX		OPTOMETRIST.
92355		Special spectacles fitting	B	XXXXX		OPTOMETRIST.
92358		Eye prosthesis service	B	XXXXX		OPTHALMOLOGY.
92371		Repair & adjust spectacles	B	XXXXX		OPTOMETRIST.
92392		Supply of low vision aids	I	XXXXX		OPTOMETRIST.
92393		Supply of artificial eye	I	XXXXX		OPTHALMOLOGY.
92395		Supply of spectacles	I	XXXXX		OPTOMETRIST.

EXHIBIT A–5.—CROSS WALK ASSUMPTIONS—Continued

HCPCS	MOD	Description	Status	Cross walk assumption		
				HCPCS	MOD	Description
92396		Supply of contact lenses	I	XXXXX		OPTOMETRIST.
96570		Photodynamic tx, 30 min	A	XXXXX		SURGICAL ONCOLOGY.
96571		Photodynamic tx, addl 15 min	A	XXXXX		SURGICAL ONCOLOGY.
96902		Trichogram	B	XXXXX		DERMATOLOGY.
97010		Hot or cold packs therapy	B	XXXXX		PHYSICAL MEDICINE.
98943		Chiropractic manipulation	N	98942		Chiropractic manipulation.
99141		Sedation, iv/im or inhalant	B	XXXXX		ANESTHESIOLOGIST.
99142		Sedation, oral/rectal/nasal	B	XXXXX		ANESTHESIOLOGIST.
99170		Anogenital exam, child	A	XXXXX		AVG NON SURGICAL.
99374		Home health care supervision	B	99375		Home health care supervision.
99377		Hospice care supervision	B	99378		Hospice care supervision.
99379		Nursing fac care supervision	B	99313		Nursing fac care, subseq.
99380		Nursing fac care supervision	B	99313		Nursing fac care, subseq.
99381		Prev visit, new, infant	N	XXXXX		PEDIATRICIAN.
99382		Prev visit, new, age 1-4	N	XXXXX		PEDIATRICIAN.
99383		Prev visit, new, age 5-11	N	XXXXX		PEDIATRICIAN.
99384		Prev visit, new, age 12-17	N	XXXXX		FAMILY PRACTITIONER.
99385		Prev visit, new, age 18-39	N	XXXXX		FAMILY PRACTITIONER.
99386		Prev visit, new, age 40-64	N	XXXXX		FAMILY PRACTITIONER.
99387		Prev visit, new, 65 & over	N	XXXXX		FAMILY PRACTITIONER.
99391		Prev visit, est, infant	N	XXXXX		PEDIATRICIAN.
99392		Prev visit, est, age 1-4	N	XXXXX		PEDIATRICIAN.
99393		Prev visit, est, age 5-11	N	XXXXX		PEDIATRICIAN.
99394		Prev visit, est, age 12-17	N	XXXXX		FAMILY PRACTITIONER.
99395		Prev visit, est, age 18-39	N	XXXXX		FAMILY PRACTITIONER.
99396		Prev visit, est, age 40-64	N	XXXXX		FAMILY PRACTITIONER.
99397		Prev visit, est, 65 & over	N	XXXXX		FAMILY PRACTITIONER.
99401		Preventive counseling, indiv	N	XXXXX		PSYCHIATRIST.
99402		Preventive counseling, indiv	N	XXXXX		PSYCHIATRIST.
99403		Preventive counseling, indiv	N	XXXXX		PSYCHIATRIST.
99404		Preventive counseling, indiv	N	XXXXX		PSYCHIATRIST.
99411		Preventive counseling, group	N	XXXXX		PSYCHIATRIST.
99412		Preventive counseling, group	N	XXXXX		PSYCHIATRIST.
G0102		Prostate ca screening; dre	A	XXXXX		UROLOGIST.
G0114		Nett; psychosocial consult	R	XXXXX		PSYCHIATRIST.
G0121		Colon ca scrn not hi rsk ind	N	XXXXX		AVG NON SURGICAL.
G0128		CORF skilled nursing service	R	XXXXX		NURSE PRACTITIONER.
G0166		Extrnl counterpulse, per tx	A	XXXXX		NURSE PRACTITIONER.
G0167		Hyperbaric oz tx;no md reqrd	A	XXXXX		NURSE PRACTITIONER.
G0168		Wound closure by adhesive	A	XXXXX		NURSE PRACTITIONER.
G0169		Removal tissue; no anesthsia	A	XXXXX		AVG SURGICAL.
G0170		Skin biograft	A	15350		Skin homograft.
G0171		Skin biograft add-on	A	15350		Skin homograft.
Q0068		Extracorpeal plasmapheresis	D	XXXXX		AVG NON SURGICAL.

[FR Doc. 00–27833 Filed 10–31–00; 8:45 am]

BILLING CODE 4210–01–P

Federal Register

Wednesday,
November 1, 2000

Part III

Department of Education

34 CFR Part 692

Special Leveraging Educational Assistance Partnership Program; Final Rule

DEPARTMENT OF EDUCATION

34 CFR Part 692

RIN 1845–AA18

Special Leveraging Educational Assistance Partnership Program

AGENCY: Office of Postsecondary Education, Department of Education.

ACTION: Final regulations.

SUMMARY: These final regulations govern the new Special Leveraging Educational Assistance Partnership (SLEAP) Program. These regulations implement changes made to the Higher Education Act of 1965, as amended (HEA), by the Higher Education Amendments of 1998, Public Law 105–481 (1998 Amendments).

DATES: *Effective Date:* These regulations are effective July 1, 2001.

Implementation Date: The Secretary has determined, in accordance with section 482(c)(2)(A) of the HEA (20 U.S.C. 1089(c)(2)(A)), that States may, at their discretion, choose to implement the provisions of these final regulations on or after November 1, 2000. For further information see ''Implementation Date of These Regulations'' under the **SUPPLEMENTARY INFORMATION** section of this preamble.

FOR FURTHER INFORMATION CONTACT: Ms. Jackie Butler, U.S. Department of Education, 400 Maryland Avenue, SW., room 3045, ROB–3, Washington, DC 20202–5447. Telephone: (202) 708–8242.

If you use a telecommunications device for the deaf (TDD), you may call the Federal Information Relay Service (FIRS) at 1–800–877–8339.

Individuals with disabilities may obtain this document in an alternative format (e.g., Braille, large print, audiotape, or computer diskette) on request to the contact person listed under **FOR FURTHER INFORMATION CONTACT.**

SUPPLEMENTARY INFORMATION: These regulations implement a new program, the SLEAP Program, added by the 1998 Amendments. On July 27, 2000, we published a notice of proposed rulemaking (NPRM) in the **Federal Register** (65 FR 46324). In the NPRM, we proposed to amend the Leveraging Educational Assistance Partnership (LEAP) Program regulations (part 692) to incorporate the newly created SLEAP Program.

In the preamble to the NPRM, we discussed the proposed regulatory provisions that were not of a minor or technical nature, and we will not repeat that discussion here. Therefore, to fully understand the SLEAP Program regulations, we strongly encourage a review of the NPRM preamble. The following list summarizes those major provisions and identifies the pages of the preamble to the NPRM on which the discussion can be found:

Section 692.53—What Requirements Must a State Satisfy To Receive SLEAP Program Funds?

This section specifies the requirements that a State must meet to receive funds under the SLEAP Program. (page 46325)

Section 692.54—What Eligibility Requirements Must a Student Satisfy To Participate in the SLEAP Program?

This section specifies the eligibility requirements that postsecondary students must meet to receive SLEAP financial assistance and non-postsecondary students must meet to receive services under the SLEAP Program. (page 46325)

Section 692.60—What Must a State Do To Receive an Allotment Under the SLEAP Program?

This section specifies the procedures that a State must follow to receive a SLEAP allotment. (pages 46325–46326)

Section 692.70—How Does the Secretary Allot Funds to the States?

This section specifies the formula used to allocate SLEAP funds to the participating States. (page 46326)

Section 692.71—What Activities May Be Funded Under the SLEAP Program?

This section specifies the authorized SLEAP activities. (pages 46326–46327)

Substantive Changes to the NPRM

There are no differences between the proposed regulations contained in the NPRM and these final regulations.

Implementation Date of These Regulations

Section 482(c) of the HEA requires that regulations affecting programs under Title IV of the HEA be published in final form by November 1 prior to the start of the award year (which begins July 1) in which they apply. However, that section also permits the Secretary to designate any regulation as one that an entity subject to the regulation may choose to implement earlier. If the Secretary designates a regulation for early implementation, he may specify when and under what conditions the entity may implement it. Under this authority, the Secretary designates §§ 692.50 through 692.80 of the SLEAP Program regulations for early implementation. Upon publication, these regulations may be implemented by the States at their discretion.

Analysis of Comments and Changes

The regulaions in this document were developed through the use of negotiated rulemaking. Section 492 of the HEA requires that, before publishing any proposed regulations to implement programs under Title IV of the HEA, the Secretary obtain public involvement in the development of the proposed regulations. After obtaining advice and recommendations, the Secretary must conduct a negotiated rulemaking process to develop the proposed regulations.

These regulations were published in the **Federal Register** in proposed form on July 27, 2000, following the completion of the negotiated rulemaking process. The Secretary invited comments on the proposed regulations by September 11, and two comments were received. An analysis of the comments follows.

We discuss issues under the sections of the regulations to which they pertain. Generally, we do not address technical and other minor changes—and suggested changes the law does not authorize the Secretary to make.

Section 692.53—What Requirements Must a State Satisfy To Receive SLEAP Program Funds?

Comments: One commenter believed that a problem exists with the proposed SLEAP regulations in § 692.53(c)(3)(i). The referenced regulatory provision requires the States to comply with the provisions of § 692.21(e), (f), (g), and (j). The commenter questioned the reference to § 692.21(f).

The commenter indicated that some of the postsecondary authorized SLEAP activities target students at four-year institutions. For example, the commenter indicated that few community colleges have a teacher preparation program, yet one of the allowable activities is a scholarship program for eligible students who wish to become teachers. The commenter further pointed out that the referenced § 692.21(f) requires that, with a limited exception, all public and private nonprofit institutions of higher education, including two-year institutions shall be eligible to participate in the SLEAP Program. The commenter indicated that these two provisions may be inconsistent. The commenter suggested that if an institution, such as a two-year institution, does not have a program that fits into one of the SLEAP activities, the State should not have to ensure that

students at that institution receive SLEAP funds.

Discussion: We disagree with the commenter that some of the postsecondary authorized SLEAP activities are targeted to four-year institutions. Neither the statute nor the regulations for the SLEAP Program require that the student be enrolled in a four-year institution. The commenter used as an example a teacher preparation program. However, the statute and regulations refer to a scholarship program for eligible needy students who wish to enter teaching. This SLEAP activity does not require that the student be enrolled in a four-year institution or program for the State to determine that the student wishes to enter teaching. This is also true for all other allowable postsecondary authorized SLEAP activities.

Changes: None.

Comments: The same commenter also had a problem with the requirement in § 692.53(c)(3)(i) that States comply with the requirement in § 692.21(g). Section 692.21(g) provides that ''if a State awards grants to independent students * * *, a reasonable portion of the State's allocation must be awarded to those [independent] students.'' The commenter believed that it is impractical for a State to ensure that a reasonable portion of the State's SLEAP allocation is awarded to independent students as required by § 692.21(g), because of the unique and specific authorized SLEAP activities and the limited funds available for those activities. The commenter suggested that a State only should ensure that independent students were not systematically excluded or that the students were included in the pool of students considered for SLEAP funding.

Discussion: We disagree. We do not believe that either the type of authorized activities under the SLEAP Program or the amount of funds appropriated for that program preclude the implementation of this provision. Moreover, the requirement of § 692.21(g) flows from the statutory requirement in section 415C(b)(7) of the HEA.

Changes: None.

Section 692.54—What Eligibility Requirements Must a Student Satisfy To Participate in the SLEAP Program?

Comments: On commenter believed that the eligibility requirements for non-postsecondary students in § 692.54(b) of the proposed SLEAP regulations exceeds the Secretary's regulatory authority. The commenter stated that a student receiving early intervention, mentoring, career education, or transition program services should not have to meet the applicable citizenship and residency requirements set forth in § 668.33 of the Student Assistance General Provisions regulations. The commenter believed that this eligibility requirement is not required or written in the statute. The commenter noted that States typically do not collect this information and this provision could serve as a disincentive for States to use the SLEAP funds for early intervention activities. The commenter recommended that the Department not regulate in this area and allow the States to define student eligibility for the non-postsecondary activities.

Discussion: We disagree. The SLEAP Program is authorized under Title IV, Part A, Subpart 4 of the HEA. Under section 415E(c)(1) through (c)(8) of the HEA, only ''eligible students'' may benefit from the activities authorized under the SLEAP Program, regardless of whether those activities are scholarships, grants, work assistance, or services, and regardless of whether the students are postsecondary or non-postsecondary students. Section 484 of the HEA sets forth the student eligibility requirements for the financial assistance provided under programs authorized under Title IV of the HEA, including LEAP and SLEAP. Accordingly, there can be no doubt that ''eligible students'' receiving scholarships, grants, or work assistance under the SLEAP Program must satisfy the applicable provisions of section 484 of the HEA. We see no logical basis for defining an ''eligible student'' differently for recipients of non-aid SLEAP activities. Thus, such a student must also satisfy the applicable provisions of section 484 of the HEA, and the citizenship and eligible non-citizenship requirement in section 484 is the one requirement in that section that is applicable to all recipients of SLEAP activities.

This position mirrors the one we adopted for the former National Early Intervention Scholarship and Partnership (NEISP) Program. The NEISP statute also referred to eligible students for purposes of being a participant in the early intervention component. The NEISP regulations required that the States select only students for the early intervention component who were citizens or eligible noncitizens. Moreover, this position is consistent with the student eligibility requirements for the Talent Search and Upward Bound Programs, each of which serve students before they enroll in postsecondary institutions.

Changes: None.

Executive Order 12866

We have reviewed these final regulations in accordance with Executive Order 12866. Under the terms of the order, we have assessed the potential costs and benefits of this regulatory action.

The potential costs associated with the final regulations are those resulting from statutory requirements and those we have determined are necessary for administering this program effectively and efficiently.

In assessing the potential costs and benefits, both quantitative and qualitative, of these final regulations, we have determined that the benefits of the regulations justify the costs.

We have also determined that this regulatory action does not unduly interfere with State, local, and tribal governments in the exercise of their governmental functions.

We discussed the potential costs and benefits of these final regulations in the preamble to the NPRM on page 46327.

Paperwork Reduction Act of 1995

The Paperwork Reduction Act of 1995 does not require you to respond to a collection of information unless it displays a valid Office of Management and Budget (OMB) control number. There are no collections of information in these final regulations that require the display of an OMB control number.

Intergovernmental Review

The SLEAP Program is subject to the requirements of Executive Order 12372 and the regulations in 34 CFR part 79. The objective of the Executive order is to foster an intergovernmental partnership and a strengthened federalism by relying on processes developed by State and local governments for coordination and review of proposed Federal financial assistance.

In accordance with the order, we intend this document to provide early notification of the Department's specific plans and actions for this program.

Assessment of Educational Impact

In the NPRM we requested comments on whether the proposed regulations would require transmission of information that any other agency or authority of the United States gathers or makes available.

Based on the response to the NPRM and on our review, we have determined that these final regulations do not require transmission of information that any other agency or authority of the United States gathers or makes available.

Electronic Access to This Document

You may view this document in text or Adobe Portable Document Format (PDF) on the Internet at the following sites:

http://ocfo.ed.gov/fedreg.htm
http://ifap.ed.gov/csb_html/fedlreg.htm

To use PDF you must have Adobe Acrobat Reader, which is available free at the first of the previous sites. If you have questions about using PDF, call the U.S. Government Printing Office (GPO), toll free, at 1–888–293–6498; or in the Washington, D.C. area at (202) 512–1530.

Note: The official version of this document is the document published in the **Federal Register**. Free Internet access to the official edition of the **Federal Register** and the Code of Federal Regulations is available on GPO Access at: http://www.access.gpo.gov/nara/index.html

(Catalog of Federal Domestic Assistance Number: 84.069 Special Leveraging Educational Assistance Partnership Program)

List of Subjects in 34 CFR Part 692

Grant programs—education, Postsecondary education, State administered—education, Student aid—education, Reporting and recordkeeping requirements.

Dated: October 24, 2000.

Richard W. Riley,

Secretary of Education.

For the reasons stated in the preamble, the Secretary amends title 34 of the Code of Federal Regulations by amending part 692 as follows:

PART 692—LEVERAGING EDUCATIONAL ASSISTANCE PARTNERSHIP PROGRAM

1. The authority citation for part 692 continues to read as follows:

Authority: 20 U.S.C. 1070c through c-4, unless otherwise noted.

2. Subpart B is revised to read as follows:

Subpart B—Special Leveraging Educational Assistance Partnership Program

General

Sec.

692.50 What is the Special Leveraging Educational AssistancePartnership Program?
692.51 What other regulations apply to the SLEAP Program?
692.52 What definitions apply to the SLEAP Program?
692.53 What requirements must a State satisfy to receive SLEAP Program funds?
692.54 What eligibility requirements must a student satisfy to participate in the SLEAP Program?

How Does a State Apply To Participate in the SLEAP Program?

692.60 What must a State do to receive an allotment under the SLEAP Program?

What Is the Amount of Assistance and How May It Be Used?

692.70 How does the Secretary allot funds to the States?
692.71 What activities may be funded under the SLEAP Program?

How Does a State Administer Its Community Service Work-Study Program?

692.80 How does a State administer its community service work-study program?

* * * * *

Subpart B—Special Leveraging Educational Assistance Partnership Program

General

§ 692.50 What is the Special Leveraging Educational Assistance Partnership Program?

The Special Leveraging Educational Assistance Partnership (SLEAP) Program assists States in providing—

(a) Grants, scholarships, and community service work-study assistance to eligible postsecondary education students who demonstrate financial need;

(b) Assistance to fund early intervention, mentoring, and career education programs for eligible students enrolled in preschool, elementary school, or secondary school who demonstrate financial need; and

(c) Assistance to fund transition programs for eligible students enrolled in secondary school who demonstrate financial need.

(Authority: 20 U.S.C. 1070c–3a)

§ 692.51 What other regulations apply to the SLEAP Program?

The regulations listed in § 692.3 also apply to the SLEAP Program.

(Authority: 20 U.S.C. 1070c–3a)

§ 692.52 What definitions apply to the SLEAP Program?

The following definitions apply to the SLEAP Program:

(a) The definitions listed in § 692.4.

(b) The definitions of the following terms in 34 CFR 77.1 (EDGAR):

Elementary school.
Preschool.
Secondary school.

(Authority: 20 U.S.C. 1070c–3a)

§ 692.53 What requirements must a State satisfy to receive SLEAP Program funds?

To receive SLEAP Program funds for any fiscal year, a State must—

(a) Participate in the LEAP Program;

(b) Meet the requirements in § 692.60; and

(c) Have a program that—

(1) Provides assistance only to students who meet the eligibility requirements in § 692.54;

(2) Satisfies the requirements in §§ 692.21(a) and (k); and

(3)(i) Satisfies the requirements in §§ 692.21(e), (f), (g), and (j), if that program provides students with postsecondary education assistance; or

(ii) Provides that no student or parent may be charged a fee that is payable to an organization other than the State for the purpose of collecting data to make a determination of financial need for preschool, elementary, or secondary school students.

(Authority: 20 U.S.C. 1070c–3a)

§ 692.54 What eligibility requirements must a student satisfy to participate in the SLEAP Program?

(a) To receive postsecondary financial assistance under the SLEAP Program, a student must meet the eligibility requirements contained in § 692.40.

(b) To receive early intervention, mentoring, career education or transition program services under the SLEAP Program, a preschool, elementary, or secondary school student must—

(1) Meet the applicable citizenship and residency requirements in 34 CFR 668.33; and

(2) Demonstrate financial need as determined by the State.

(Authority: 20 U.S.C. 1070c–3a)

How Does a State Apply To Participate in the SLEAP Program?

§ 692.60 What must a State do to receive an allotment under the SLEAP Program?

To receive an allotment under the SLEAP Program, a State must—

(a) Submit an application in accordance with the provisions in § 692.20;

(b) Identify the activities in § 692.71 that it plans to carry out;

(c) Provide an assurance that for the fiscal year prior to the fiscal year for which the State is requesting Federal funds, the amount the State expended from non-Federal sources per student, or the aggregate amount the State expended, for all the authorized activities in § 692.71 will be no less than the amount the State expended from non-Federal sources per student, or in the aggregate, for those activities for the second fiscal year prior to the fiscal year for which the State is requesting Federal funds; and

(d) Ensure that the Federal share will not exceed one-third of the total funds expended under the SLEAP Program.

(Authority: 20 U.S.C. 1070c–3a)

What Is the Amount of Assistance and How May It Be Used?

§ 692.70 How does the Secretary allot funds to the States?

For each fiscal year, the Secretary allots to each eligible State that applies for SLEAP funds an amount in accordance with the provisions in § 692.10.

(Authority: 20 U.S.C. 1070c–3a)

§ 692.71 What activities may be funded under the SLEAP Program?

A State may use the funds it receives under the SLEAP Program to implement one or more of the following:

(a) Increase the dollar amount of grants awarded under the LEAP Program to eligible students who demonstrate financial need as determined in § 692.41.

(b) Carry out transition programs from secondary school to postsecondary education for eligible students who demonstrate financial need as determined by the State.

(c) Carry out a financial aid program for eligible students who demonstrate financial need as determined in § 692.41 and who wish to enter careers in information technology or other fields of study determined by the State to be critical to the State's workforce needs.

(d) Make funds available for community service work-study activities for eligible students who demonstrate financial need as determined in § 692.41.

(e) Create a postsecondary scholarship program for eligible students who demonstrate financial need as determined in § 692.41 and who wish to enter teaching.

(f) Create a scholarship program for eligible students who demonstrate financial need as determined in § 692.41 and who wish to enter a program of study leading to a degree in mathematics, computer science, or engineering.

(g) Carry out early intervention programs, mentoring programs, and career education programs for eligible students who demonstrate financial need as determined by the State.

(h) Award merit or academic scholarships to eligible students who demonstrate financial need as determined in § 692.41.

(Authority: 20 U.S.C. 1070c–3a)

How Does a State Administer Its Community Service Work-Study Program?

§ 692.80 How does a State administer its community service work-study program?

When administering its community service work-study program, a State must follow the provisions in § 692.30, other than the provisions of paragraph (a)(1) of that section.

(Authority: 20 U.S.C. 1070c–3a)

[FR Doc. 00–27740 Filed 10–31–00; 8:45 am]

BILLING CODE 4000–01–U

Federal Register

Wednesday,
November 1, 2000

Part IV

Department of Education

34 CFR Part 674
Federal Perkins Loan Program; Final Rule

DEPARTMENT OF EDUCATION

34 CFR Part 674

RIN 1845–AA15

Federal Perkins Loan Program

AGENCY: Office of Postsecondary Education, Department of Education.

ACTION: Final regulations.

SUMMARY: The Secretary amends the Federal Perkins Loan (Perkins Loan) Program regulations. These final regulations are intended to improve collections in the Perkins Loan Program by providing greater flexibility in the process of assigning defaulted Perkins loans to the Secretary for collection. They are intended to address the large number of Perkins loan accounts that have been in default status for more than five years.

These regulations also allow State institutions participating in the Perkins Loan Program to invoke their right to sovereign immunity in bankruptcy proceedings and clarify the maximum collection costs that may be assessed to a borrower who defaults again on a previously rehabilitated defaulted loan.

DATES: These regulations are effective July 1, 2001.

FOR FURTHER INFORMATION CONTACT: Vanessa Freeman, Program Analyst, U.S. Department of Education, 400 Maryland Avenue, SW., Room 3045, Regional Office Building #3, Washington, DC 20202–5447. Telephone: (202) 708–8242. If you use a telecommunications device for the deaf (TDD), you may call the Federal Information Relay Service (FIRS) at 1–800–877–8339.

Individuals with disabilities may obtain this document in an alternative format (*e.g.,* Braille, large print, audiotape, or computer diskette) on request to the contact person listed in the preceding paragraph.

SUPPLEMENTARY INFORMATION: On July 27, 2000, the Secretary published a notice of proposed rulemaking (NPRM) for the Federal Perkins Loan Program in the **Federal Register** (65 FR 46127). In the preamble to the NPRM, the Secretary discussed on pages 46128–46130 the major proposed changes to the regulations.

Analysis of Comments and Changes

The regulations in this document were developed through the use of negotiated rulemaking. Section 492 of the Higher Education Act requires that, before publishing any proposed regulations to implement programs under Title IV of the Act, the Secretary obtain public involvement in the development of the proposed regulations. After obtaining advice and recommendations, the Secretary must conduct a negotiated rulemaking process to develop the proposed regulations.

These regulations were published in proposed form on July 27, 2000, in conformance with the consensus of the negotiated rulemaking committee. Under the committee's protocols, consensus meant that no member of the committee dissented from the agreed-upon language. The Secretary invited comments on the proposed regulations by September 11, 2000 and 10 comments were received. An analysis of the comments follows.

We discuss substantive issues under the sections of the regulations to which they pertain. Generally, we do not address technical and other minor changes and suggested changes the law does not authorize the Secretary to make.

Section 674.49 Bankruptcy of the Borrower

Comment: All of the commenters expressed support for the proposed regulations and specifically applauded the proposal that will allow a public institution determined to be an agency of a State to invoke its right of sovereign immunity under the eleventh amendment to the Constitution of the United States.

Discussion: We thank the commenters for their support.

Changes: None.

Section 674.39 Loan Rehabilitation

Comment: All of the commenters expressed support for the technical provision that reflects the Secretary's interpretation that the 24 percent cap on collection costs that may be charged a borrower on a rehabilitated defaulted loan no longer applies if the borrower defaults again on that loan.

Discussion: We thank the commenters for their support.

Changes: None.

Sections 674.13 and 674.50 Reimbursement to the Fund and Assignment of Defaulted Loans to the United States

Comment: One commenter recommended that we actively seek input from institutions participating in the Federal Perkins Loan Program to ensure the success of voluntary assignment of Perkins loans to the Department. The commenter believes that if the process is developed in a vacuum without the advice and input of Perkins Loan Program participants, the program will have a very high probability of failure. The commenter also recommended that, in the event the new process is not successful, the Secretary determine the reasons for the lack of success before proposing new requirements, specifically any form of mandatory assignment.

Discussion: We appreciate the commenter's concern and are committed to developing a simplified voluntary assignment process for aging accounts. We will work with interested institutions and organizations to develop a less administratively burdensome process that institutions will readily use. However, should the voluntary process prove unsuccessful, we believe that to preserve program integrity and support, the Secretary must consider all other possible alternatives, including mandatory assignment of these aging accounts. In that event, any proposed changes would be subject to the negotiated rulemaking process, which provides for active participation by the student financial aid community.

Changes: None.

Comment: One commenter expressed the view that loan assignments by schools reduce funds available for future students. The commenter believes that it is not in the best interest of an institution to assign loans to the Department since funds collected by the Department are not returned to the Perkins Loan Program.

Discussion: We have researched the issue of whether collections received by us on assigned Federal Perkins Loans can remain in the program. We have determined that these funds may be redistributed within the Perkins Loan Program, although not specifically to the school that assigned the loan, and we are committed to doing so.

Changes: None.

Comment: One commenter suggested a list of documents that should be required when a loan is assigned to us for collection.

Discussion: We appreciate the commenter's suggestions. However, the change in section 674.50(c) of the regulations, which lists all possible documentation that may be required for assignment, is intended to improve Perkins loan collections by providing greater flexibility in the process of assigning certain defaulted Perkins Loans to us. We plan to work closely with the student aid community to develop the procedural guidelines for assignment, including identifying the minimum required documentation necessary for us to collect effectively on the assigned loans. We believe that separately codifying the required

documentation for certain categories of assignments undermines the flexibility achieved through this regulatory change.

Changes: None.

Comment: One commenter recommended that we establish a referral process on aged Perkins accounts. The commenter stated that a referral process would increase the collection tools available to institutions while preserving institutional control of the accounts.

Discussion: Our experience with an earlier Perkins Loan referral program was that the program was difficult to administer for both schools and the Department. More importantly, we have collection tools that are not available to schools, such as administrative wage garnishment, federal offset, and litigation by the Department of Justice that cannot be used if we do not hold legal title to the loan. We believe that under certain circumstances, such as an institution's inability to collect on a portion of its default portfolio for a lengthy period of time, maintaining program integrity and returning dollars generally to the Perkins Loan program outweighs preserving institutional control of these accounts.

Changes: None.

Comment: One commenter expressed the view that we should recognize the fact that accounts that are more than five years in default are still collectible. The commenter believes that schools that have loans in default over five years would have already obtained judgments that enable the schools to enforce wage garnishments. The commenter stated that borrowers must often satisfy such judgments before buying and selling real estate and are therefore highly motivated to pay the loan in full.

Discussion: We understand that some schools may have undertaken judicial wage garnishment to collect some of these aging, defaulted accounts. Clearly, if payments related to judicial wage garnishment are being received, the account would be an unlikely candidate for voluntary assignment. However, we believe that administrative wage garnishment, which only the Secretary can undertake on Federal Perkins loans, is a far more efficient and cost-effective collection tool than across-the-board litigation on aging, non-paying accounts. Such litigation poses significant costs to the school's fund and reduces dollars available for future students. Further, we believe that some schools may have exhausted all available collection efforts on some unknown number of these accounts and that we should have the opportunity to make use of our collection advantages to return money to the Perkins Loan Program.

Changes: None.

Comment: One commenter feels that we should eliminate the provision that requires institutions to reimburse the Fund for all loans not accepted for assignment.

Discussion: The proposed change in § 674.13 modifies this provision of the regulations to allow us discretion in deciding when to require a school to reimburse its Perkins Fund. We believe that there will still be circumstances under which reimbursement of a school's fund would be appropriate, such as when the actions of a school render a loan legally unenforceable. Therefore, we decline to eliminate all possibility of reimbursement associated with assignment.

Changes: None.

Section 674.49 Bankruptcy of Borrower

Comment: One commenter noted that the proposed regulation that eliminates the requirement that an institution file a proof of claim if it wishes to invoke its right of sovereign immunity appeared to apply only to Chapter 7 bankruptcy filings.

Discussion: We would like to clarify that although the preamble to the proposed regulation only referenced Chapter 7 bankruptcy proceedings as it relates to claims of sovereign immunity, the proposed regulatory language itself also eliminated the proof of claim filing requirement for Chapter 13 bankruptcy proceedings.

Changes: None.

Executive Order 12866

We have reviewed these final regulations in accordance with Executive Order 12866. Under the terms of the order we have assessed the potential costs and benefits of this regulatory action.

The potential costs associated with these final regulations are those resulting from statutory requirements and those we have determined as necessary for administering this program effectively and efficiently. Elsewhere in this **SUPPLEMENTARY INFORMATION** section, we identify and explain any burdens associated with information collection requirements. See the heading Paperwork Reduction Act of 1995.

In assessing the potential costs and benefits—both quantitative and qualitative—of these final regulations, we have determined that the benefits would justify the costs.

We have also determined that these final regulations do not unduly interfere with State, local, and tribal governments in the exercise of their governmental functions.

We discussed the potential costs and benefits of these final regulations in the preamble to the NPRM (65 FR 46129). We include additional discussion of potential costs and benefits in the section of this preamble titled Analysis of Comments and Changes.

Paperwork Reduction Act of 1995

The Paperwork Reduction Act of 1995 does not require you to respond to a collection of information unless it displays a valid OMB control number. We display the valid OMB control numbers assigned to the collections of information in these final regulations at the end of the affected sections of the regulations.

Assessment of Educational Impact

In the NPRM we requested comments on whether the proposed regulation would require transmission of information that any other agency or authority of the United States gathers or makes available.

Based on the response to the NPRM and on our review, we have determined that these final regulations do not require transmission of information that any other agency or authority of the United States gathers or makes available.

Electronic Access to This Document

You may view this document, as well as other Department of Education documents published in the **Federal Register** in text or Adobe Portable Document Format (PDF) on the Internet at the following sites:

http://ocfo.ed.gov/fedreg.htm
http://ifap.ed.gov/csb_html/fedlreg.htm

To use the PDF you must have the Adobe Acrobat Reader Program with Search, which is available free at the previous sites. If you have questions about using the PDF, call the U.S. Government Printing Office (GPO), toll free, at 1–888–293–6498; or in the Washington, DC, area at (202) 512–1530.

Note: The official version of this document is the document published in the **Federal Register**. Free Internet access to the official edition of the **Federal Register** and the Code of Federal Regulations is available on GPO Access at: http://www.access.gpo.gov/nara/index.html

(Catalog of Federal Domestic Assistance Number: 84.037 Federal Perkins Loan Program)

List of Subjects in 34 CFR Part 674

Loan programs—education, Student aid, Reporting and recordkeeping requirements.

Dated: October 24, 2000.

Richard W. Riley,

Secretary of Education.

For the reasons discussed in the preamble, the Secretary amends part 674 of title 34 of the Code of Federal Regulations as follows:

PART 674—FEDERAL PERKINS LOAN PROGRAM

1. The authority citation for part 674 continues to read as follows:

Authority: 20 U.S.C. 1087aa–1087ii and 20 U.S.C. 421–429, unless otherwise noted.

2. Section 674.13 is amended by revising the introductory text in paragraph (a) and adding an OMB control number following the section to read as follows:

§ 674.13 Reimbursement to the Fund.

(a) The Secretary may require an institution to reimburse its Fund in an amount equal to that portion of the outstanding balance of—

* * * * *

(Approved by the Office of Management and Budget under control number 1845–0019)

3. Section 674.39 is amended by revising paragraph (c) and revising the OMB control number following the section to read as follows:

§ 674.39 Loan rehabilitation.

* * * * *

(c) Collection costs on a rehabilitated loan—

(1) If charged to the borrower, may not exceed 24 percent of the unpaid principal and accrued interest as of the date following application of the twelfth payment;

(2) That exceed the amounts specified in paragraph (c)(1) of this section, may be charged to an institution's Fund until July 1, 2002 in accordance with § 674.47(e)(5); and

(3) Are not restricted to 24 percent in the event the borrower defaults on the rehabilitated loan.

* * * * *

(Approved by the Office of Management and Budget under control number 1845–0023)

4. Section 674.49 is amended by revising paragraph (b) and revising the OMB control number following the section to read as follows:

§ 674.49 Bankruptcy of borrower.

* * * * *

(b) *Proof of claim.* The institution must file a proof of claim in the bankruptcy proceeding unless—

(1) In the case of a proceeding under chapter 7 of the Bankruptcy Code, the notice of meeting of creditors states that the borrower has no assets, or

(2) In the case of a bankruptcy proceeding under either Chapter 7 or Chapter 13 of the Bankruptcy Code in which the repayment plan proposes that the borrower repay less than the full amount owed on the loan, the institution has an authoritative determination by an appropriate State official that in the opinion of the State official, the institution is an agency of the State and is, on that basis, under applicable State law, immune from suit.

* * * * *

(Approved by the Office of Management and Budget under control number 1845–0023)

5. Section 674.50 is amended by revising paragraph (c) introductory text and by revising the OMB control number following the section to read as follows:

§ 674.50 Assignment of defaulted loans to the United States.

* * * * *

(c) The Secretary may require an institution to submit the following documents for any loan it proposes to assign—

* * * * *

(Approved by the Office of Management and Budget under control number 1845–0019)

[FR Doc. 00–27739 Filed 10–31–00; 8:45 am]

BILLING CODE 4000–01–P

Federal Register

Wednesday,
November 1, 2000

Part V

Department of Education

34 CFR Parts 682 and 685

Federal Family Education Loan (FFEL) Program and William D. Ford Federal District Loan Program; Final Rule

DEPARTMENT OF EDUCATION

34 CFR Parts 682 and 685

RIN 1845–AA16

Federal Family Education Loan (FFEL) Program and William D. Ford Federal Direct Loan Program

AGENCY: Office of Postsecondary Education, Department of Education.

ACTION: Final regulations.

SUMMARY: The Secretary amends the Federal Family Education Loan (FFEL) Program regulations and the William D. Ford Federal Direct Loan (Direct Loan) Program regulations. These regulations are intended to reduce administrative burden for program participants, provide benefits to borrowers, and protect the taxpayers' interests.

DATES: *Effective Date:* These regulations are effective July 1, 2001.

Implementation Date: The Secretary has determined, in accordance with section 482(c)(2)(A) of the HEA (20 U.S.C. 1089(c)(2)(A)), that guaranty agencies may, at their discretion, choose to implement § 682.410(b)(6) on or after November 1, 2000.

FOR FURTHER INFORMATION CONTACT: For the FFEL Program, Mr. George Harris, or for the Direct Loan Program, Mr. Jon Utz; U.S. Department of Education, 400 Maryland Avenue, SW., room 3045, ROB–3, Washington, DC 20202–5449. Telephone: (202) 708–8242. If you use a telecommunications device for the deaf (TDD), you may call the Federal Information Relay Service (FIRS) at 1–800–877–8339.

Individuals with disabilities may obtain this document in an alternative format (e.g., Braille, large print, audiotape, or computer diskette) on request to the contact person listed under **FOR FURTHER INFORMATION CONTACT**.

SUPPLEMENTARY INFORMATION: The regulations in this document were developed through the use of negotiated rulemaking. Section 492 of the Higher Education Act of 1965, as amended (HEA), requires that, before publishing any proposed regulations to implement programs under Title IV of the HEA, the Secretary obtain public involvement in the development of the proposed regulations. After obtaining advice and recommendations, the Secretary must conduct a negotiated rulemaking process to develop the proposed regulations.

On July 27, 2000 the Secretary published a notice of proposed rulemaking (NPRM) for parts 682 and 685 in the **Federal Register** (65 FR 46316). In the preamble to the NPRM, the Secretary discussed on pages 46317–46320 the major proposed changes to the regulations. The Secretary invited comments on the proposed regulations by September 11, 2000 and 16 parties submitted comments.

On August 10, 2000, the Secretary published another NPRM for parts 600, 668, 675, 682, 685, and 690 in the **Federal Register** (65 FR 49134). In the preamble to that NPRM, the Secretary discussed on pages 49135–49147 the major proposed changes to the regulations. The Secretary invited comments on these proposed regulations by September 25, 2000, and 33 parties submitted comments. To consolidate all of the provisions for the FFEL and Direct Loan programs, these final regulations include not only the provisions from the July 27, 2000 NPRM, but also the amendments to parts 682 and 685 from the August 10, 2000 NPRM. We strongly urge the reader to refer to the preambles from both of the NPRMs for a full discussion of these regulations.

In addition to minor technical revisions, these regulations contain a few significant changes from these two NPRMs that we fully explain in the Analysis of Comments and Changes that follows. The only significant comment we received concerning the changes to parts 682 and 685 proposed in the August 10, 2000 NPRM is reflected under our discussion related to 682.604(b).

Analysis of Comments and Changes

We discuss substantive issues under the sections of the regulations to which they pertain. Generally, we do not address technical and other minor changes—and suggested changes the law does not authorize the Secretary to make.

FFEL and Direct Loan Program Changes

Sections 682.210 and 685.204—Deferment

Comment: One commenter did not agree with the proposal to remove the current provisions that prohibit the granting of an economic hardship for a period beginning more than 6 months before the date the lender receives the request and the supporting documentation. The commenter agreed that supporting documentation for other deferments (*e.g.*, a military or disability deferment) frequently must be certified and provided by other parties, but believed that documentation of a borrower's income and debt for purposes of an economic hardship deferment should be readily in the borrower's possession.

Discussion: While some forms of deferment documentation are more readily accessible to borrowers than other forms of documentation, the accessibility of documentation is not the primary reason why we have decided to eliminate the 6-month limitation on the retroactive application of a deferment. The primary rationale for eliminating this limitation is that borrowers frequently are unaware that they may qualify for a deferment until it is too late (because of the 6-month limitation) to take full advantage of a deferment they are entitled to receive. During the negotiated rulemaking sessions, representatives of schools, borrower organizations and FFEL lenders and servicers all indicated that this lack of awareness applies to all deferment categories, including economic hardship deferments. Therefore, we believe it is appropriate to eliminate the 6-month limit for that deferment as well as the others.

Changes: None.

Comment: One commenter recommended that the removal of the 6-month limitation on the application of a deferment be applied retroactively to assist borrowers who otherwise would have been eligible for the deferment, but who encountered loan problems because they did not submit documentation to support their deferment in a timely manner.

Discussion: We believe that borrowers have been, and should continue to be, responsible for providing deferment documentation to loan holders on a timely basis. The removal of the 6-month limitation on the retroactive application of deferments does not mean that the rules for granting deferments that existed in the past should be changed. In fact, we believe that applying these new rules to past requests for deferments would create significant confusion and complications for program participants without helping a significant number of borrowers. Upon the effective date of these regulations (July 1, 2001), the removal of the 6-month limitation on the retroactive application of a deferment will apply to any period of authorized deferment that includes July 1, 2001 or a later date. For program integrity reasons, a period of authorized deferment that does not include July 1, 2001 or a later date, and that was subject to the 6-month limit when the deferment was granted, may not be revised.

We want to stress that the documentation required to support an application for a deferment with a begin

date more than 6 months prior to the date of the application must be related to the date that the borrower claims he or she met the requirements for the deferment. For example, if a borrower requests an economic hardship deferment for a period that began two years prior to the date of the request, the documentation and income must support the borrower's qualification for that deferment at the start of that period. If the supporting documentation does not support the beginning date claimed by the borrower, but the lender determines that the borrower met the conditions for the deferment sometime after that date, a deferment may be granted retroactively only to the date the borrower met the conditions for the deferment.

Changes: None.

Comment: One commenter was concerned that the removal of the 6-month limitation on the retroactive application of a deferment would weaken the incentive for borrowers to submit their deferment documentation in a timely manner. The commenter envisioned situations in which borrowers who had defaulted on their loans would provide deferment documentation many months or even years after default. The commenter believed that this could result in significant issues related to loan repurchases, reapplication of payments, and credit bureau reporting. To help retain an incentive for borrowers to provide their deferment documentation timely, the commenter recommended a change to the existing requirements of § 682.210(a)(7) by removing the sentence, ''The 270- or 330-day period required to establish default does not run during the deferment and post-deferment grace periods.''

Discussion: We do not believe that the situation envisioned by the commenter is likely to occur. Under 34 CFR 682.210(a)(8), a borrower who has failed to make payments for 270 days and for whom the lender has submitted a default claim may receive a deferment on a loan only if he or she has made repayment arrangements acceptable to the lender. After a lender's default claim is paid by a guaranty agency, the borrower is ineligible for a deferment on the loan. Thus, unless there was a mistake by the lender and the loan was not properly in default at the time the claim was paid, the guaranty agency would not consider the borrower's request for a deferment under the conditions outlined by the commenter.

Changes: None.

Comment: One commenter believed that it was illogical to use old income data from a borrower's most recently filed Federal income tax return to determine if the borrower would qualify for a current or future economic hardship deferment.

Discussion: Section 435(o)(1)(B) of the HEA refers to the borrower's ''adjusted gross income'' as an income measurement to be used to determine if a borrower would have an economic hardship in repaying a loan. The term ''adjusted gross income'' is generally used to refer to the amount reported on a Federal income tax return. In light of the statutory use of this term, we believe that it is appropriate to refer to the borrower's most recent Federal income tax return as the source for this amount.

Changes: None.

Comment: One commenter thought it was confusing to have a stipulation in § 682.210(h)(2)(i) that an initial unemployment period may not be granted more than 6 months prospectively. The commenter believed that by specifying this requirement here, it was unclear why a similar specific restriction was not mentioned for subsequent periods of unemployment deferment.

Discussion: We agree that the clarity of the regulatory language concerning an initial period of unemployment deferment could be improved. For subsequent periods of unemployment, there already exists a 6-month prospective limit on the granting of an unemployment deferment in § 682.210(h)(4).

Changes: We have revised § 682.210(h)(2)(i) to clarify the length of time that an initial period of unemployment deferment can be granted.

Sections 682.402 and 685.214—False Certification Discharge

Comment: One commenter advocated a regulatory change in light of the ruling of the U.S. Court of Appeals for the District of Columbia, in *Jordan* v. *Riley* 194 F.3d 169 (D.C. Cir. 1999). In that ruling, the court held that the employment attempt provisions in the false certification discharge regulations of the FFEL and Direct Loan programs were inconsistent with the HEA. Consequently, the commenter believed that the regulations should be revised to require guaranty agencies or the Department to review all applications for false certification discharge that had been denied based on the borrower's employment history. The commenter stated that such borrowers should not be required to resubmit applications.

Discussion: The issue raised by the commenter does not relate to these regulations, but is more appropriately addressed in other ways. Accordingly, the regulations will not be revised, but we will work with the Federal student loan community to determine how to make information on this case generally available to the public.

Changes: None.

Comment: Several commenters noted that the ability-to-benefit regulations in 34 CFR 668.32 were revised October 22, 1999, and became effective July 1, 2000. The commenters noted that those regulations should have been incorporated into the changes proposed for § 682.402(e)(13)(ii) in the July 27, 2000 NPRM.

Discussion: We agree.

Changes: The regulations have been revised accordingly.

FFEL Changes

Section 682.410—Fiscal, Administrative, and Enforcement Requirements

Comment: One commenter recommended that the notice a guaranty agency is required to send to the borrower within 45 days after paying a lender's default claim should advise the borrower that he or she can contact the Department's Student Loan Ombudsman Office. The commenter believed that this option should be emphasized instead of suggesting that the borrower may wish to contact a lawyer. In the commenter's opinion, most borrowers who contact lawyers regarding disputed student loan repayment obligations incur unnecessary legal costs. Another commenter argued that it would be inconsistent to require guaranty agencies to advise borrowers that they may wish to contact a lawyer and not have the same type of requirement apply to the Federal Perkins Loan Program and the Direct Loan Program. The commenter believed that this requirement would cause an increase in the number of frivolous lawsuits and be detrimental to the interests of all parties, including borrowers who contacted lawyers. The commenter recommended a deletion of this requirement.

Discussion: Proposed § 682.410(b)(6)(v) specifically requires that the guaranty agency's notice to the borrower include a statement that ''borrowers may have certain legal rights in the collection of debts, and that borrowers may wish to contact counselors or lawyers regarding those rights.'' This language was developed during negotiated rulemaking by a group that included representatives of guaranty agencies, collection contractors, and borrower and student representatives. The Department accepted the language because it

encouraged borrowers to get help in understanding their legal rights. We do not share the commenters' concerns that the addition of this language will encourage unnecessary litigation. The proposed rule specifically encourages borrowers to contact ''counselors or lawyers'' to get assistance. In some cases, a borrower may be helped by a debt management or other counselor. In other cases, legal advice may be needed. In any case, we believe that encouraging borrowers to get assistance in understanding their legal rights and obligations may contribute to resolving disputes between guaranty agencies and borrowers.

We do not agree with the commenter's suggestion that we should add a specific reference to the availability of the Department's Student Loan Ombudsman Office in this notice. Current regulations require a lender to notify the borrower of the availability of the Student Loan Ombudsman's Office as part of the lender's collection activity on a delinquent loan. In addition, under 34 CFR 682.410(b)(5)(vii), a guaranty agency is required to provide information on the availability of the Department's Student Loan Ombudsman Office if the borrower appeals an adverse decision resulting from the agency's administrative review of the borrower's loan obligation. We believe that these notices provide borrowers with sufficient notice of the opportunity to contact the Ombudsman's office. We do not believe that adding a reference to the Ombudsman's Office in the notice sent by the guaranty agency to the borrower under § 682.410(b)(6)(v) would improve this process. In fact, at this stage of the process it is most important for the borrower to be in contact with the guaranty agency directly. While the Ombudsman's Office may facilitate that communication in some cases, we believe it is better to encourage borrowers and their representatives to be directly in contact with the guaranty agency rather than to contact the Ombudsman's office.

In regard to the commenter's suggestion that the statement regarding the borrower's legal rights also be added to notices in the Direct Loan and Perkins programs, we note that the notices sent to borrowers in those programs are not the subject of these regulations. However, in collecting Direct loans that are in default, we generally follow the same or similar collection activities required of guaranty agencies under § 682.410(b). We will consider the commenter's suggestion when we revise the Direct Loan collection notices and when new regulations governing the Perkins Loan Program are developed.

Changes: None.

Comment: One commenter believed that the regulations should require a guaranty agency to advise borrowers of their legal rights, as known by the agency, and to disclose the number and types of court cases involving borrowers, and the results of those cases. The commenter also believed that the agency should be required to provide the names and contact information for at least three attorneys located near the borrower who have recently brought successful cases against the agency.

Discussion: We do not believe it is necessary or appropriate for the guaranty agency to provide the borrower the information suggested by the commenter. It would put the guaranty agency in the inappropriate position of providing legal advice to a possibly adverse party. Therefore, we have not accepted the commenter's suggestions.

Changes: None.

Comment: One commenter believed that the notice required to be sent to the borrower in accordance with § 682.410(b)(6)(vi) should be sent within a specified number of days, rather than within ''a reasonable time.''

Discussion: The regulations were revised to give guaranty agencies greater flexibility in the collection of defaulted loans from borrowers. We see no reason to undermine that goal by revising the regulations to be more prescriptive in this area.

Changes: None.

Section 682.414—Records, Reports, and Inspection Requirements for Guaranty Agency Programs

Comments: One commenter believed that the starting ''clock'' for measuring the 3-year (or 5-year) record retention period should be tied to the date loans are reported to us on the guaranty agency's quarterly report, rather than from the dates provided in the regulations. The commenter thought this would make it easier for a guaranty agency to schedule its record destruction and facilitate the agency's retention of records for longer time periods if needed.

Discussion: The effect of the commenter's recommendation would be to expand the record retention period by requiring a guaranty agency to retain loan records for the 3-year period following the date the loan is repaid in full by the borrower, plus the additional period from the actual paid-in-full date to the date the paid-in-full loan is reported on the guaranty agency's next quarterly report. By setting minimum retention periods, the regulations already permit a guaranty agency to establish its record retention procedures consistent with its administrative needs even if that means the records are retained longer than the minimum period.

Changes: None.

Comment: One commenter recommended that the reduction in a guaranty agency's record retention period from 5 years to 3 years should apply to loans paid in full by any means, not just to loans repaid in full by the borrower.

Discussion: A loan that is paid in full by the borrower generally reflects the borrower's acknowledgment of his or her repayment obligation. The borrower also typically has his or her own repayment records. In contrast, in cases where parties other than the borrower are involved in the repayment of loans (for example, a closed school discharge claim), borrowers may have no direct involvement in or knowledge of the actual payment mechanisms, and thus have no personal repayment records. To protect borrower and taxpayer interests and preserve program integrity, we believe the 5-year retention period should be preserved in these types of cases.

Changes: None.

(The following discussion relates to regulations included in the August 10, 2000 NPRM.)

Section 682.604(b)—Releasing Loan Proceeds

Comments: The commenters supported the proposal eliminating the requirement that a school must determine a student's eligibility after it receives loan proceeds from a lender. Under the proposed regulations, a school may release loan proceeds to a student after it determines that the student continuously has maintained eligibility under the provisions in § 682.201. However, several of the commenters argued that the proposed language could be misinterpreted to require that a school continuously verify the eligibility of the student under those provisions and suggested that the language be revised.

Discussion: We agree. For the purpose of determining whether a school may release FFEL loan proceeds to a student, we wish to make clear that the school does not have to continuously verify the eligibility of the student. Rather, the school determines whether the student has maintained continuous eligibility in accordance with the provisions of § 682.201 before it releases loan proceeds.

Changes: Section 682.604(b)(2)(i) is revised accordingly.

Paperwork Reduction Act of 1995

The Paperwork Reduction Act of 1995 does not require you to respond to a collection of information unless it displays a valid OMB control number. Following OMB approval, we will display the valid OMB control numbers assigned to the collections of information in these final regulations at the end of the affected sections of the regulations.

Executive Order 12866

We have reviewed these final regulations in accordance with Executive Order 12866. Under the terms of the order we have assessed the potential costs and benefits of this regulatory action.

The potential costs associated with the final regulations are those resulting from statutory requirements and those we have determined to be necessary for administering these programs effectively and efficiently.

In assessing the potential costs and benefits—both quantitative and qualitative—of these final regulations, we have determined that the benefits of the regulations justify the costs.

We have also determined that this regulatory action does not unduly interfere with State, local, and tribal governments in the exercise of their governmental functions.

Summary of potential costs and benefits: We summarized the potential costs and benefits of these final regulations in the preamble to the July 27, 2000 NPRM on page 46319, and in the preamble to the August, 10, 2000 NPRM on page 49147.

Assessment of Educational Impact

In the NPRMs, we requested comments on whether the proposed regulations would require transmission of information that any other agency or authority of the United States gathers or makes available.

Based on the response to the NPRMs and our own review, we have determined that these final regulations do not require transmission of information that any other agency or authority of the United States gathers or makes available.

Electronic Access to This Document

You may view this document, as well as other Department of Education documents published in the **Federal Register**, in text or Adobe Portable Document Format (PDF) on the Internet at either of the following sites:

http://ocfo.ed.gov/fedreg. htm
http://www.ed.gov/news.html

To use PDF you must have Adobe Acrobat Reader, which is available free at either of the previous sites. If you have questions about using PDF, call the U.S. Government Printing Office (GPO), toll free, at 1–888–293–6498; or in the Washington, DC, area at (202) 512–1530.

You may also view this document in text or PDF at the following site:

http://ifap.ed.gov/csb_html/fedlreg.htm

Note: The official version of this document is the document published in the **Federal Register**. Free Internet access to the official edition of the **Federal Register** and the Code of Federal Regulations is available on GPO Access at: http://www.access.gpo.gov/nara/index.html

(Catalog of Federal Domestic Assistance Number 84.032 Federal Family Education Loan Program, and 84.268, William D. Ford Federal Direct Loan Program)

List of Subjects in 34 CFR Parts 682 and 685

Administrative practice and procedure, Colleges and universities, Education, Loan programs—education, Reporting and recordkeeping requirements, Student aid, Vocational education.

Dated: October 24, 2000.

Richard W. Riley,

Secretary of Education.

For the reasons discussed in the preamble, the Secretary amends parts 682 and 685 of title 34 of the Code of Federal Regulations as follows:

PART 682—FEDERAL FAMILY EDUCATION LOAN (FFEL) PROGRAM

1. The authority citation for part 682 continues to read as follows:

Authority: 20 U.S.C. 1071 to 1087–2, unless otherwise noted.

2. Section 682.201 is amended by revising paragraph (b)(1)(vii)(F) to read as follows:

§ 682.201 Eligible borrowers.

* * * * *

(b) * * *

(1) * * *

(vii) * * *

(F) The lender must retain a record of its basis for determining that extenuating circumstances existed. This record may include, but is not limited to, an updated credit report, a statement from the creditor that the borrower has made satisfactory arrangements to repay the debt, or a satisfactory statement from the borrower explaining any delinquencies with outstanding balances of less than $500.

* * * * *

3. Section 682.207 is amended by:

A. Revising paragraph (b)(1)(i)(B).

B. Revising paragraph (b)(1)(vi).

C. Revising paragraph (c)(3).

D. Removing ''(1)'' after the paragraph designation ''(f)''; removing paragraph (f)(2); and redesignating paragraphs (f)(1)(i), (f)(1)(ii), and (f)(1)(iii) as paragraphs (f)(1), (f)(2), and (f)(3), respectively.

The amendments read as follows:

§ 682.207 Due diligence in disbursing a loan.

* * * * *

(b)(1) * * *

(i) * * *

(B) Must disburse a Stafford or PLUS loan in accordance with the disbursement schedule provided by the school or any request made by the school modifying that schedule.

* * * * *

(vi) Except as provided in paragraph (f) of this section, may not disburse a second or subsequent disbursement of a Federal Stafford loan to a student who has ceased to be enrolled; and

* * * * *

(c) * * *

(3) Disbursement must be made on a payment period basis in accordance with the disbursement schedule provided by the school or any request made by the school modifying that schedule.

* * * * *

4. Section 682.210 is amended by:

A. Revising paragraph (a)(5).

B. Revising paragraph (h)(2)(i).

C. Removing the words ''of up to one year at a time'' from paragraph (s)(6) introductory text.

D. Removing the words ''in accordance with paragraph (s)(6)(vi) of this section'' from paragraph (s)(6)(vii).

E. Revising paragraphs (s)(6)(iii), (iv), (v), (viii), (ix), and (x).

The revisions read as follows:

§ 682.210 Deferment.

(a) * * *

(5) An authorized deferment period begins on the date that the holder determines is the date that the condition entitling the borrower to the deferment first existed, except that an initial unemployment deferment as described in paragraph (h)(2) of this section cannot begin more than 6 months before the date the holder receives a request and documentation required for the deferment.

* * * * *

(h) * * *

(2) * * *

(i) Describing the borrower's diligent search for full-time employment during

the preceding 6 months, except that a borrower requesting an initial period of unemployment deferment is not required to describe his or her search for full-time employment at the time the deferment is granted. The initial period of unemployment deferment can be granted for a period of unemployment beginning up to 6 months before the date the holder receives the borrower's request and documentation for the deferment, and can be granted for up to 6 months after that date. For a continuation of an unemployment deferment following the initial period, the borrower's written certification must include information showing that the borrower made at least six diligent attempts to secure employment to support the prior 6-month period covered by the certification. This information could be the name of the employer contacted and the employer's address and telephone number, or other information acceptable to the holder showing that the borrower made six diligent attempts to obtain full-time employment;

* * * * *

(s) * * *

(6) * * *

(iii) Is working full-time and has a monthly income that does not exceed the greater of (as calculated on a monthly basis)—

(A) The minimum wage rate described in section 6 of the Fair Labor Standards Act of 1938; or

(B) An amount equal to 100 percent of the poverty line for a family of two, as determined in accordance with section 673(2) of the Community Services Block Grant Act.

(iv) Is working full-time and has a Federal education debt burden that equals or exceeds 20 percent of the borrower's monthly income, and that income, minus the borrower's Federal education debt burden, is less than 220 percent of the amount described in paragraph (s)(6)(iii) of this section.

(v) Is not working full-time and has a monthly income that—

(A) Does not exceed twice the amount described in paragraph (s)(6)(iii) of this section; and

(B) After deducting an amount equal to the borrower's Federal education debt burden, the remaining amount of the borrower's income does not exceed the amount described in paragraph (s)(6)(iii) of this section.

* * * * *

(viii) For an initial period of deferment granted under paragraphs (s)(6)(iii) through (v) of this section, the lender must require the borrower to submit evidence showing the amount of the borrower's monthly income.

(ix) To qualify for a subsequent period of deferment that begins less than one year after the end of a period of deferment under paragraphs (s)(6)(iii) through (v) of this section, the lender must require the borrower to submit—

(A) Evidence showing the amount of the borrower's monthly income or a copy of the borrower's most recently filed Federal income tax return; and

(B) For periods of deferment under paragraphs (s)(6)(iv) and (v) of this section, evidence that would enable the lender to determine the amount of the monthly payments to all other entities for Federal postsecondary education loans that would have been owed by the borrower during the deferment period.

(x) For purposes of paragraph (s)(6) of this section, a borrower's monthly income is the gross amount of income received by the borrower from employment and from other sources, or one-twelfth of the borrower's adjusted gross income, as recorded on the borrower's most recently filed Federal income tax return.

* * * * *

5. Section 682.402 is amended by:

A. Revising paragraph (e)(3) introductory text.

B. In paragraph (e)(3)(ii) introductory text, removing the words ''the school's''.

C. In paragraph (e)(3)(ii)(A) adding the word ''and'' after the semicolon, and in paragraph (e)(3)(ii)(B), removing the word ''and'' after the semi-colon.

D. Removing paragraph (e)(3)(ii)(C).

E. Revising paragraph (e)(13)(ii)(A).

F. Revising paragraph (e)(13)(ii)(B) introductory text.

G. In paragraph (e)(13)(ii)(B)(*2*), removing the word ''or'' that appears after the semi-colon.

H. In paragraph (e)(13)(ii)(C), removing the period and adding in its place, ''; or''.

I. Adding a new paragraph (e)(13)(ii)(D).

J. Adding a new paragraph (e)(13)(ii)(E).

K. Adding a new paragraph (e)(13)(iv).

L. Adding a new paragraph (e)(14).

The additions and revisions read as follows:

§ 682.402 Death, disability, closed school, false certification, unpaid refunds, and bankruptcy payments.

* * * * *

(e) * * *

(3) *Borrower qualification for discharge.* Except as provided in paragraph (e)(14) of this section, to qualify for a discharge of a loan under paragraph (e) of this section, the borrower must submit to the holder of the loan a written request and a sworn statement. The statement need not be notarized, but must be made by the borrower under penalty of perjury, and, in the statement, the borrower must—

* * * * *

(13) * * *

(ii) * * *

(A) For periods of enrollment beginning prior to July 1, 1987, was determined to have the ability to benefit from the school's training in accordance with the requirements of 34 CFR 668.6, as in existence at the time the determination was made;

(B) For periods of enrollment beginning between July 1, 1987 and June 30, 1996, achieved a passing grade on a test—

* * * * *

(D) For periods of enrollment beginning on or after July 1, 1996 through June 30, 2000—

(*1*) Obtained, within 12 months before the date the student initially receives title IV, HEA program assistance, a passing score specified by the Secretary on an independently administered test in accordance with subpart J of 34 CFR part 668; or

(*2*) Enrolled in an eligible institution that participates in a State process approved by the Secretary under subpart J of 34 CFR part 668.

(E) For periods of enrollment beginning on or after July 1, 2000—

(*1*) Met either of the conditions described in paragraph (e)(13)(ii)(D) of this section; or

(*2*) Was home schooled and met the requirements of 34 CFR 668.32(e)(4).

* * * * *

(iv) Notwithstanding paragraphs (e)(13)(i) and (ii) of this section, a student has the ability to benefit from the training offered by the school if the student received a high school diploma or its recognized equivalent prior to enrollment at the school.

(14) *Discharge without an application.* A borrower's obligation to repay all or a portion of an FFEL Program loan may be discharged without an application from the borrower if the Secretary, or the guaranty agency with the Secretary's permission, determines that the borrower qualifies for a discharge based on information in the Secretary or guaranty agency's possession.

* * * * *

6. Section 682.406 is amended by revising paragraph (a)(11) to read as follows:

§ 682.406 Conditions for claim payments from the Federal Fund and for reinsurance coverage.

(a) * * *

(11) The agency exercised due diligence in collection of the loan in accordance with § 682.410(b)(6).

* * * * *

7. Section 682.410 is amended by:

A. Amending paragraph (b)(5)(i) introductory text by removing the reference to paragraph ''(b)(6)(iii)'' and adding in its place ''(b)(6)(v)''.

B. Amending paragraph (b)(5)(ii) introductory text by removing the reference to paragraph ''(b)(6)(ii)'' and adding in its place ''(b)(6)(v)''.

C. Revising paragraph (b)(6).

D. Removing paragraph (b)(7).

E. Redesignating paragraphs (b)(8) through (b)(11) as paragraphs (b)(7) through (b)(10), respectively.

F. Amending redesignated paragraph (b)(7)(ii) by removing the reference to paragraph ''(b)(8)(i)'' and adding in its place ''(b)(7)(i)''.

G. Amending redesignated paragraph (b)(7)(ii)(D) by removing the reference to paragraph ''(b)(6)(i)'' and adding in its place ''(b)(6)''.

H. Amending redesignated paragraph (b)(8) by removing the reference to paragraphs ''(b)(2), (5), (6), and (7)'' and adding in its place ''(b)(2), (5), and (6)''.

I. Amending redesignated paragraph (b)(9)(i)(E) by removing the references to paragraphs ''(b)(10)(i)(D)'' and ''(b)(10)(i)(J)'' and adding in their place ''(b)(9)(i)(D)'' and ''(b)(9)(i)(J)'', respectively.

J. Amending redesignated paragraph (b)(9)(i)(F) by removing the reference to paragraph ''(b)(10)(i)(H)'' and adding in its place ''(b)(9)(i)(H)''.

K. Amending redesignated paragraph (b)(9)(i)(I) by removing the reference to paragraph ''(b)(10)(i)(H)'' and adding in its place ''(b)(9)(i)(H)''.

L. Amending redesignated paragraph (b)(9)(i)(K) by removing both references to paragraph ''(b)(10)(i)(B)'' and adding in their place ''(b)(9)(i)(B)''.

M. Amending redesignated paragraph (b)(9)(i)(L) by removing both references to paragraph ''(b)(10)(i)(B)'' and adding in their place ''(b)(9)(i)(B)''.

N. Amending redesignated paragraph (b)(10)(ii) by removing the reference to ''§ 682.410(b)(11)(i)'' and adding in its place ''§ 682.410(b)(10)(i)''.

The revisions read as follows:

§ 682.410 Fiscal, administrative, and enforcement requirements.

* * * * *

(b) * * *

(6) *Collection efforts on defaulted loans.*

(i) A guaranty agency must engage in reasonable and documented collection activities on a loan on which it pays a default claim filed by a lender. For a non-paying borrower, the agency must perform at least one activity every 180 days to collect the debt, locate the borrower (if necessary), or determine if the borrower has the means to repay the debt.

(ii) A guaranty agency must attempt an annual Federal offset against all eligible borrowers. If an agency initiates proceedings to offset a borrower's State or Federal income tax refunds and other payments made by the Federal Government to the borrower, it may not initiate those proceedings sooner than 60 days after sending the notice described in paragraph (b)(5)(ii)(A) of this section.

(iii) A guaranty agency must initiate administrative wage garnishment proceedings against all eligible borrowers, except as provided in paragraph (b)(6)(iv) of this section, by following the procedures described in paragraph (b)(9) of this section.

(iv) A guaranty agency may file a civil suit against a borrower to compel repayment only if the borrower has no wages that can be garnished under paragraph (b)(9) of this section, or the agency determines that the borrower has sufficient attachable assets or income that is not subject to administrative wage garnishment that can be used to repay the debt, and the use of litigation would be more effective in collection of the debt.

(v) Within 45 days after paying a lender's default claim, the agency must send a notice to the borrower that contains the information described in paragraph (b)(5)(ii) of this section. During this time period, the agency also must notify the borrower, either in the notice containing the information described in paragraph (b)(5)(ii) of this section, or in a separate notice, that if he or she does not make repayment arrangements acceptable to the agency, the agency will promptly initiate procedures to collect the debt. The agency's notification to the borrower must state that the agency may administratively garnish the borrower's wages, file a civil suit to compel repayment, offset the borrower's State and Federal income tax refunds and other payments made by the Federal Government to the borrower, assign the loan to the Secretary in accordance with § 682.409, and take other lawful collection means to collect the debt, at the discretion of the agency. The agency's notification must include a statement that borrowers may have certain legal rights in the collection of debts, and that borrowers may wish to contact counselors or lawyers regarding those rights.

(vi) Within a reasonable time after all of the information described in paragraph (b)(6)(v) of this section has been sent, the agency must send at least one notice informing the borrower that the default has been reported to all national credit bureaus (if that is the case) and that the borrower's credit rating may thereby have been damaged.

* * * * *

8. Section 682.414 is amended by revising paragraph (a)(2) to read as follows:

§ 682.414 Records, reports, and inspection requirements for guaranty agency programs.

(a) * * *

(2) A guaranty agency must retain the records required for each loan for not less than 3 years following the date the loan is repaid in full by the borrower, or for not less than 5 years following the date the agency receives payment in full from any other source. However, in particular cases, the Secretary may require the retention of records beyond these minimum periods.

* * * * *

9. Section 682.604 is amended by:

A. Revising paragraph (b)(2)(i).

B. Revising paragraph (c)(6).

C. Revising paragraph (c)(7).

The amendments read as follows:

§ 682.604 Processing the borrower's loan proceeds and counseling borrowers.

* * * * *

(b) * * *

(2)(i) Except in the case of a late disbursement under paragraph (e) of this section or as provided in paragraph (b)(2)(iii) or (iv) of this section, a school may release the proceeds of any disbursement of a loan only to a student whom the school determines has maintained continuous eligibility in accordance with the provisions of § 682.201 for the loan period certified by the school on the student's loan application.

* * * * *

(c) * * *

(6) Unless the provision of § 682.207(d) or the provisions of paragraph (c)(7) of this section apply—

(i) If a loan period is more than one payment period, the school must deliver loan proceeds at least once in each payment period; and

(ii) If a loan period is one payment period, the school must make at least two deliveries of loan proceeds during that payment period. The school may not make the second delivery until the calendar midpoint between the first and last scheduled days of class of the loan period.

(7)(i) If a school measures academic progress in an educational program in

credit hours and either does not use terms or does not use terms that are substantially equal in length for a loan period, the school may not deliver a second disbursement until the later of—

(A) The calendar midpoint between the first and last scheduled days of class of the loan period; or

(B) The date, as determined by the school, that the student has completed half of the academic coursework in the loan period.

(ii) For purposes of paragraph (c)(7) of this section, terms in a loan period are substantially equal in length if no term in the loan period is more than two weeks longer than any other term in that loan period.

* * * * *

PART 685—WILLIAM D. FORD FEDERAL DIRECT LOAN PROGRAM

10. The authority citation for part 685 continues to read as follows:

Authority: 20 U.S.C. 1087a *et seq.*, unless otherwise noted.

11. Section 685.214 is amended by:

A. Removing the words ''the school's'' in paragraph (c)(1).

B. Adding the word ''and'' after the semicolon at the end of paragraph (c)(1)(i).

C. Removing ''; and'' at the end of paragraph (c)(1)(ii) and adding, in its place, a period.

D. Removing paragraph (c)(1)(iii).

E. Adding a new paragraph (c)(6).

The revisions read as follows:

§ 685.214 Discharge for false certification of student eligibility or unauthorized payment.

* * * * *

(c) * * *

(6) *Discharge without an application.* The Secretary may discharge a loan under this section without an application from the borrower if the Secretary determines, based on information in the Secretary's possession, that the borrower qualifies for a discharge.

* * * * *

12. Section 685.301 is amended by revising paragraph (b)(5) to read as follows:

§ 685.301 Origination of a loan by a Direct Loan Program school.

* * * * *

(b) * * *

(5)(i) If a school measures academic progress in an educational program in credit hours and either does not use terms or does not use terms that are substantially equal in length for a loan period, the school may not make a second disbursement until the later of—

(A) The calendar midpoint between the first and last scheduled days of class of the loan period; or

(B) The date, as determined by the school, that the student has completed half of the academic coursework in the loan period.

(ii) For purposes of this paragraph, terms in a loan period are substantially equal in length if no term in the loan period is more than two weeks longer than any other term in that loan period.

* * * * *

[FR Doc. 00–27738 Filed 10–31–00; 8:45 am]

BILLING CODE 4000–01–U

Federal Register

Wednesday,
November 1, 2000

Part VI

Department of Education

34 CFR Parts 682 and 685

Federal Family Education Loan Program and William D. Ford Federal Direct Loan Program; Final Rule

DEPARTMENT OF EDUCATION

34 CFR Parts 682 and 685

RIN 1845–AA11

Federal Family Education Loan Program and William D. Ford Federal Direct Loan Program

AGENCY: Office of Postsecondary Education, Department of Education.

ACTION: Final regulations.

SUMMARY: The Secretary amends the Federal Family Education Loan (FFEL) Program and the William D. Ford Federal Direct Loan (Direct Loan) Program regulations. These final regulations implement changes made to the Higher Education Act of 1965, as amended, (HEA) by the Higher Education Amendments of 1998 (1998 Amendments). The final regulations implement the teacher loan forgiveness programs in the FFEL and Direct Loan programs that were included in the 1998 Amendments. In addition, these final regulations make conforming changes for both the FFEL Program and the Direct Loan Program, as well as unrelated technical amendments to the Direct Loan Program regulations.

DATES: These regulations are effective July 1, 2001.

FOR FURTHER INFORMATION CONTACT: For the FFEL Program, Ms. Beth Grebeldinger, or for the Direct Loan Program, Mr. Don Watson, U.S. Department of Education, 400 Maryland Avenue, SW., Room 3045, Regional Office Building #3, Washington, DC 20202–5346. Telephone: (202) 708–8242. If you use a telecommunications device for the deaf (TDD), you may call the Federal Information Relay Service (FIRS) at 1–800–877–8339.

Individuals with disabilities may obtain this document in an alternate format (e.g., Braille, large print, audiotape, or computer diskette) on request to one of the contact persons listed in the preceding paragraph.

SUPPLEMENTARY INFORMATION: These regulations implement certain changes made to the HEA by the 1998 Amendments (Pub.L. 105–244) that affect the FFEL and Direct Loan programs.

On August 10, 2000, the Secretary published a notice of proposed rulemaking (NPRM) for the FFEL and Direct Loan programs in the **Federal Register** (65 FR 49124).

In the preamble to the NPRM, on pages 49125 to 49127, the Secretary discussed the proposed regulations that would implement the teacher loan forgiveness program in the FFEL and Direct Loan programs. These include the following:

Amending §§ 682.211(h)(2) and (3), 682.215(e), 685.205(a)(5), and 685.205(b)(6) to allow some borrowers to request forbearance while performing qualifying teaching service, and during the submission and processing of their applications for teacher loan forgiveness.

Amending §§ 682.215(a), 685.212(h), and 685.217(a) to reflect sections 428J and 460 of the HEA, which established teacher loan forgiveness programs for certain borrowers in the FFEL Direct Loan programs.

Amending §§ 682.215(b) and 685.217(b) to provide specific definitions for the terms ''academic year'', ''elementary school'', ''full-time'', ''secondary school'', and ''teacher'' for purposes of the teacher loan forgiveness program.

Amending §§ 682.215(c) and 685.217(c) to provide that to qualify for the teacher loan forgiveness program a borrower must have been employed full-time for five consecutive complete years in a low-income elementary or secondary school that has been listed in a designated Department directory.

Amending §§ 682.215(d) and 685.217(d) to provide that $5,000 is the maximum amount that may be forgiven for an individual teacher under these programs.

Amending §§ 682.215(f) and 685.217(e) to explain the application process for both the borrower and the loan holder.

Analysis of Comments and Changes

The regulations in this document were developed through the use of negotiated rulemaking. Section 492 of the HEA requires that, before publishing any proposed regulations to implement programs under Title IV of the HEA, the Secretary obtain public involvement in the development of the proposed regulations. After obtaining advice and recommendations, the Secretary must conduct a negotiated rulemaking process to develop the proposed regulations.

These regulations were published in proposed form on August 10, 2000, following completion of the negotiated rulemaking process. The Secretary invited comments on the proposed regulations by September 25, 2000. In response to the Secretary's invitation in the NPRM, 10 parties submitted comments on the proposed regulations. An analysis of the comments and of the changes in the regulations since publication of the NPRM follows.

We discuss substantive issues under the sections of the regulations to which they pertain. Generally, we do not address technical and other minor changes—and suggested changes the law does not authorize the Secretary to make.

Section 682.215(a)—General

Comment: One commenter requested additional information regarding the regulatory requirement that the loan for which the borrower is requesting forgiveness must have been made prior to the end of the fifth year of qualifying teaching service.

Discussion: The regulations require that the loan for which forgiveness is sought must have been made prior to the end of the five-year qualifying teaching service. This requirement was included to be consistent with the stated intent of the statute that the teacher loan forgiveness programs encourage individuals to enter and continue in the teaching profession. We believe that there needs to be a safeguard against the possibility that a borrower, who after meeting the teaching requirements of the forgiveness program, quits teaching, returns to school to train for another profession and then asks to have $5,000 in loans for the new training forgiven based on that earlier teaching. To avoid this situation, the regulations require that loans for which forgiveness is being sought must have been made prior to the end of the qualifying five-year teaching service.

Changes: None.

Comment: Four commenters recommended modifying § 682.215(a) to clarify that $5,000 is the total amount for all loans that a borrower may be eligible to have forgiven, not a per program amount.

Discussion: We agree that the regulations would be clearer with the recommended change.

Change: We have revised the language in both § 682.215(a) and § 685.217(a) to state that the combined total forgiveness limit is $5,000 for loans in the FFEL or Direct Loan programs.

Section 682.215(c)—Borrower Eligibility

Comment: Four commenters stated that they believed that the discussion in the preamble to the NPRM, regarding when the borrower's qualifying teaching at the school begins, seemed contradictory to the statute and the proposed regulations and requested clarification.

Discussion: To clarify, if the school at which a borrower is performing qualifying teaching is not a designated eligible low-income school when the borrower begins the teaching service, but becomes such a school while the borrower is performing qualifying

teaching, the required five years begins from the point that the school gains the designated eligible low-income school status. Any years of teaching prior to that designation do not apply to the five complete, consecutive years required for forgiveness. On the other hand, if an eligible, designated school loses its designation while the borrower is teaching there, any continuous subsequent years of qualified teaching service at that same school may be included in the five-year requirement.

Change: None.

Comment: Three commenters suggested specifically including criteria to § 682.215(c)(3) and (4) to make special education teachers eligible for the loan forgiveness based solely on their role as a special education teacher.

Discussion: The regulations that the commenters wish to revise are based directly on the statute and the requested change is not supported by the statutory language. Special education teaching is not one of the specific criteria included in the statute, but the teacher may qualify for the loan forgiveness program if the qualifying teaching otherwise meets the statutory requirements. The regulations do specifically include special education teachers in the definition of a teacher, so if a special education teacher met the other criteria in paragraphs (c)(3) or (c)(4), he or she could be eligible for teacher loan forgiveness.

Change: None.

Comment: One commenter suggested that the regulations provide certification criteria for school officials to follow to ensure consistent, objective and fair determinations of a teacher's eligibility to participate in the loan forgiveness program.

Discussion: We do not see a need for such regulatory guidance. The statute requires that the chief administrative officer of the school determine that a borrower has met the criteria outlined in the statute and the regulations. We believe that the criteria are sufficiently clear and that school administrators will be able to provide the needed certifications. Our experience with the certifications used in the Federal Perkins Loan Program, while based on slightly different eligibility criteria, has shown that school administrators can apply the required standards without prescriptive regulatory guidance.

Change: None.

Comment: One commenter indicated that § 682.215(c)(5) did not address ''gaps'' that may occur between the end of an accepted condition that would not constitute a ''break'' in the consecutive complete years of teaching required by the law and the resumption of qualified teaching. This commenter requested that these regulations allow borrowers to delay their return to qualifying teaching service to the beginning of the next academic year if necessary, as was done in connection with the special grace period for borrowers returning from active duty military service.

Discussion: We agree that due to the scheduling of academic years, it may be impossible for a teacher to resume teaching immediately at the conclusion of one of the exempted conditions. Such ''gap'' periods should not penalize a borrower who met an exempted condition.

Change: We have made a change in §§ 682.215(c)(6) and 685.217(c)(6) to ensure that these gaps are not treated as a break in qualifying service.

Comment: One commenter suggested an expansion of conditions that would not constitute a break in the consecutive, complete qualifying teaching service. The commenter argued that there are other conditions over which the teacher has no control. Among the conditions suggested were: periods of protracted labor disputes, natural disasters or emergencies, and funding shortfalls.

Discussion: While we acknowledge that these conditions are events over which the teacher may have no control, it was not our intent to address every possible event that could disrupt the school year. We believe that if the events listed by the commenter occur, the school or school district would extend the academic year or declare that the academic year has been completed early. Either of these results would qualify the year as a complete academic year for purposes of teacher loan forgiveness.

Change: None.

Comment: One commenter suggested that the school's certifying chief administrative official should have greater flexibility in determining the relationship of the studies the borrower undertakes in returning to postsecondary education while taking a break in their qualifying teaching if the borrower returns to qualifying teaching.

Discussion: We believe that it is appropriate to require that the teacher undertake education that is ''directly related'' to the performance of the service that the statute wants to support. We do not think it would be appropriate to allow the borrower to engage in postsecondary education that is unrelated to the performance of the qualifying service and still receive the loan forgiveness.

Change: None.

Sections 682.215(d) and 685.217(d)—Forgiveness Amount

Comment: Three commenters suggested changing the regulations to clarify that a borrower with a consolidation loan qualifies for loan forgiveness only if the consolidation loan is outstanding and the forgiveness amount relates to a qualifying loan (a subsidized or unsubsidized loan made under the FFEL Program or the Direct Loan Program) that was repaid by the Consolidation Loan.

Discussion: We agree that the regulations need to be clarified to describe the relationship between the consolidation loan and the underlying loans for purposes of the loan forgiveness.

Change: We have changed §§ 682.215(d)(1) and 685.217(d)(1) to clarify how loan forgiveness affects consolidation loans.

Comment: Three commenters suggested clarifying that the forgiveness amount total of $5,000 includes both outstanding principal and accrued interest.

Discussion: We agree that this change would clarify the regulations.

Change: We have made the suggested change to §§ 682.215(d)(2) and 685.217(d)(2) to clarify that the forgiveness amount limit of $5,000 applies to both outstanding principal and accrued interest.

Comment: Four commenters suggested revising § 682.215(d)(3) to clarify that payments received from a borrower or on behalf of a borrower would not be refunded as directed in the statute.

Discussion: Proposed §§ 682.215(d)(3) and 685.217(d)(3) reflect the statutory provision that payments received from a borrower are not refunded if the borrower qualifies for loan forgiveness. However, the statutory provision also applies to payments made on behalf of the borrower and we agree with the commenters that the regulations should make it clear that payments made on the borrower's behalf also will not be refunded.

Change: We have modified §§ 682.215(d)(3) and 685.217(d)(3) to clarify that payments made on a borrower's behalf are not returned if the borrower qualifies for loan forgiveness.

Section 682.215(e)—Authorized Forbearance During Qualifying Teaching Service and Discharge Processing

Comment: Two commenters questioned the interchangeable use of ''holder'' and ''lender'' in the FFEL proposed regulations. They argued that

this practice creates consistency and accuracy problems.

Discussion: We agree that it is important to use the terms ''lender'' and ''holder'' carefully since the term ''holder'' includes parties who are not included in the definition of a lender.

Change: Throughout these regulations we will use the term ''holder'' since the obligations placed on the loan holders in the teacher loan forgiveness program do not just apply to lenders but to all loan holders.

Comment: Four commenters proposed using the term ''must'' in § 682.215(e)(1), as well as redesignating paragraphs. These changes would require a loan holder to provide an annual forbearance to a borrower for certain qualified periods without a request from the borrower. The commenters noted that a borrower is not required to request a forbearance in connection with other loan cancellation opportunities such as the unpaid refund, false certification, and closed school discharges.

Discussion: The commenter incorrectly assumes that the regulations do not require the loan holder to grant a forbearance to a borrower who may qualify for the teacher loan forgiveness program. Section 682.215(e)(1) includes a cross-reference to the mandatory forbearance section of the FFEL regulations. Therefore, the use of ''must'' is not necessary. We also do not agree with the commenter's suggestion that a borrower should not have to request the forbearance. This mandatory forbearance requires an annual request from the borrower, in part to allow the loan holder to ensure that the borrower still meets the qualifications for the discharge. The request also allows the borrower to certify his or her intent to satisfy the five-year teaching requirement. In addition, since the $5,000 discharge will not, for many borrowers, extinguish their entire debt, a borrower may determine that it is better to make payments for a period of time and not request the forbearance. The requirement for an annual request gives the borrower an opportunity to consider his or her options. As to the commenter's statement that other loan cancellation programs do not require a borrower request, we note that those loan cancellations are based on situations relating to the loan that would be reflected in records that are otherwise available to the holder. The borrower's qualification for a teacher loan forgiveness and the related forbearance would not be reflected in other information available to the loan holder.

Change: None.

Comment: Some commenters also suggested that lenders only be required to review the borrower's balance at the time the initial forbearance request is submitted instead of multiple times throughout the qualifying five-year teaching period.

Discussion: As noted earlier, these regulations permit the borrower to request a forbearance for each year of the qualifying service. As discussed in the preamble to the NPRM, this mandatory forbearance was added to ensure that borrowers with a low balance loan who qualify for loan forgiveness would not lose the maximum benefit by continuing to make monthly payments. The annual request allows the lender to determine if capitalized interest will create an outstanding balance for the borrower at the end of the five-year period. It also provides an opportunity for the lender to counsel the borrower regarding the effects of capitalized interest and to advise the borrower of any balance that may remain outstanding at the conclusion of the qualifying teaching period.

Change: None.

Section 682.215(f)—Application and processing

Comment: Three commenters suggested adding an additional cross-reference to § 682.215(f)(2)(i) to include all references to certifying officials. Another commenter suggested revising the language of § 682.215(f)(2)(i) to make it clear that the application may include the certifications of the borrower and the appropriate chief administrative official or officials.

Discussion: With respect to the comment about adding a cross-reference, we believe that removing all cross-references is the better approach to address the commenters' concerns. We agree with the commenter who expressed concern that the proposed rule implied that there would be multiple application and certification forms.

Change: Section 682.215(f)(2)(i) has been modified by removing the cross-references and broadening the language regarding the application to address the commenters' concerns.

Comment: Three commenters recommended adding to the regulations a provision allowing late filing by a lender of the request for payment with the guaranty agency. One commenter suggested that for late filings the lender would be responsible for repaying the Secretary all interest and special allowance for the late period.

Discussion: We agree and thank the commenters for pointing out this oversight.

Change: A new paragraph (iii) has been added to § 682.215(f)(2) to address the comments.

Comment: One commenter suggested clarifying that forgiveness payments should first be applied to unsubsidized and then to subsidized Federal Consolidation loans.

Discussion: The FFEL Program does not distinguish between subsidized and unsubsidized Federal Consolidation Loans. Thus, this change will not be made.

Change: None

Comment: One commenter requested an addition to the regulations to allow a guaranty agency that holds a defaulted loan that is eligible for this forgiveness to be able to recover from the Department the complement of the reinsurance percentage paid on the applicable loan amount. The commenter noted that this change would be consistent with the treatment provided in other loan discharge situations.

Discussion: Since a defaulted loan for which the borrower has made satisfactory arrangement may be eligible for discharge under these programs, we agree with the commenter.

Change: We have added a new paragraph (g) to § 682.215 to reflect this correction.

Executive Order 12866

We have reviewed these final regulations in accordance with Executive Order 12866. Under the terms of the order we have assessed the potential costs and benefits of this regulatory action.

The potential costs associated with the final regulations are those resulting from statutory requirements and those we have determined as necessary for administering these programs effectively and efficiently. Elsewhere in this **SUPPLEMENTARY INFORMATION** section, we identify and explain any burdens specifically associated with information collection requirements.

In assessing the potential costs and benefits—both quantitative and qualitative—of this regulatory action, we have determined that the benefits would justify the costs.

We have also determined that this regulatory action does not unduly interfere with State, local, and tribal governments in the exercise of their governmental functions.

We summarized the potential costs and benefits of these final regulations in the preamble to the NPRM (65 FR 49127).

Paperwork Reduction Act of 1995

The Paperwork Reduction Act of 1995 does not require you to respond to a

collection of information unless it displays a valid OMB control number. We display the valid OMB control number assigned to the collection of the information in these final regulations at the end of the affected section of the regulations.

Assessment of Educational Impact

Based on the response to the NPRM and on our review, we have determined that these final regulations do not require transmission of information that any other agency or authority of the United States gathers or makes available.

Electronic Access to This Document

You may view this document, as well as all other Department of Education documents published in the **Federal Register**, in text or Adobe Portable Document Format (PDF) on the Internet at either the following sites:

http://ocfo.ed.gov/fedreg.htm
http://www.ed.gov/news.html

To use PDF you must have Adobe Acrobat Reader, which is available free at either of the previous sites. If you have questions about using PDF, call the U.S. Government Printing Office (GPO), toll free, at 1–888–293–6498; or in the Washington, DC, area at (202) 512–1530.

Note: The official version of this document is the document published in the **Federal Register**. Free Internet access to the official edition of the **Federal Register** and the Code of Federal Regulations is available on GPO Access at: http://www.access.gpo.gov/nara/index.html

(Catalog of Federal Domestic Assistance Numbers 84.032 Federal Family Education Loan Program, and 84.268 William D. Ford Federal Direct Loan Program)

List of Subjects in 34 CFR Parts 682 and 685

Administrative practice and procedure, Colleges and universities, Education, Loan programs-education, Reporting and recordkeeping requirements, Student aid, Vocational education.

Dated: October 24, 2000.

Richard W. Riley,

Secretary of Education.

For the reasons stated in the preamble, the Secretary amends title 34 of the Code of Federal Regulations by revising parts 682 and 685 as follows:

PART 682—FEDERAL FAMILY EDUCATION LOAN (FFEL) PROGRAM

1. The authority citation for part 682 continues to read as follows:

Authority: 20 U.S.C. 1071 to 1087–2, unless otherwise noted.

2. Section 682.211 is amended as follows:

A. In paragraph (h)(2)(ii)(B), by removing the period at the end and adding in its place, ''; or''.

B. By adding a new paragraph (h)(2)(ii)(C).

C. By adding a new paragraph (h)(3)(iii).

The additions and revisions read as follows:

§ 682.211 Forbearance.

* * * * *

(h) * * *

(2) * * *

(ii) * * *

(C) Is performing the type of service that would qualify the borrower for loan forgiveness and associated forbearance under the requirements of the teacher loan forgiveness program in § 682.215.

* * * * *

(3) * * *

(iii) Before granting a forbearance to a borrower under paragraph (h)(2)(ii)(C) of this section, the lender must require the borrower to—

(A) Submit documentation for the period of the annual forbearance request showing the beginning and anticipated ending dates that the borrower is expected to perform, for that year, the type of service described in § 682.215(c); and

(B) Certify the borrower's intent to satisfy the requirements of § 682.215(c).

(Approved by the Office of Management and Budget under control number 1845–0020)

* * * * *

3. A new § 682.215 is added to read as follows:

§ 682.215 Teacher loan forgiveness program.

(a) *General.* The teacher loan forgiveness program is intended to encourage individuals to enter and continue in the teaching profession. For new borrowers, the Secretary repays up to a combined total of $5,000 of subsidized and unsubsidized Federal Stafford Loans, Direct Subsidized Loans, Direct Unsubsidized Loans, and in certain cases, Federal Consolidation Loans or Direct Consolidation Loans. The forgiveness program is only available to a borrower who has no outstanding loan balance under the FFEL Program or the Direct Loan Program on October 1, 1998 or who has no outstanding loan balance on the date he or she obtains a loan after October 1, 1998. In addition, the borrower must have been employed as a full-time teacher for five consecutive complete academic years, at least one of which was after the 1997–1998 academic year, in certain eligible elementary or secondary schools that serve low-income families. The loan for which forgiveness is sought must have been made prior to the end of the borrower's fifth year of qualifying teaching service.

(b) *Definitions.* The following definitions apply to this section:

Academic year means one complete school year at the same school, or two complete and consecutive half years at different schools, or two complete and consecutive half years from different school years at either the same school or different schools. Half years exclude summer sessions and generally fall within a twelve-month period. For schools that have a year-round program of instruction, nine months is considered an academic year.

Elementary school means a public or nonprofit private school that provides elementary education as determined by State law or the Secretary if that school is not in a State.

Full-time means the standard used by a State in defining full-time employment as a teacher. For a borrower teaching in more than one school, the determination of full-time is based on the combination of all qualifying employment.

Secondary school means a public or nonprofit private school that provides secondary education as determined by State law or the Secretary if the school is not in a State.

Teacher means a person who provides direct classroom teaching or classroom-type teaching in a non-classroom setting, including Special Education teachers.

(c) *Borrower eligibility.* (1) A borrower may obtain loan forgiveness under this program if he or she has been employed as a full-time teacher for five consecutive complete academic years, at least one of which was after the 1997–1998 academic year, in an elementary or secondary school that—

(i) Is in a school district that qualifies for funds under title I of the Elementary and Secondary Education Act of 1965, as amended;

(ii) Has been selected by the Secretary based on a determination that more than 30 percent of the school's total enrollment is made up of children who qualify for services provided under title I; and

(iii) Is listed in the *Annual Directory of Designated Low-Income Schools for Teacher Cancellation Benefits.* If this directory is not available before May 1 of any year, the previous year's directory may be used.

(2) If the school at which the borrower is employed meets the requirements specified in paragraph (c)(1) of this

section for at least one year of the borrower's five consecutive complete academic years of teaching and the school fails to meet those requirements in subsequent years, those subsequent years of teaching qualify for purposes of this section for that borrower.

(3) A borrower who is employed as an elementary school teacher must demonstrate knowledge and teaching skills in reading, writing, mathematics, and other areas of the elementary school curriculum, as certified by the chief administrative officer of the school in which the borrower was employed.

(4) A borrower who is employed as a secondary school teacher must teach in a subject area that is relevant to the borrower's academic major as certified by the chief administrative officer of the school in which the borrower was employed.

(5) The academic year may be counted as one of the borrower's five consecutive complete academic years if the borrower completes at least one-half of the academic year and the borrower's employer considers the borrower to have fulfilled his or her contract requirements for the academic year for the purposes of salary increases, tenure, and retirement if the borrower is unable to complete an academic year due to—

(i) A return to postsecondary education, on at least a half-time basis, that is directly related to the performance of the service described in this section;

(ii) A condition that is covered under the Family and Medical Leave Act of 1993 (FMLA) (19 U.S.C. 2654); or

(iii) A call or order to active duty status for more than 30 days as a member of a reserve component of the Armed Forces named in section 10101 of title 10, United States Code.

(6) A borrower's period of postsecondary education, qualifying FMLA condition, or military active duty as described in paragraph (c)(5) of this section, including the time necessary for the borrower to resume qualifying teaching no later than the beginning of the next regularly scheduled academic year, does not constitute a break in the required five consecutive years of qualifying teaching service.

(7) A borrower who taught in more than one qualifying school during an academic year and demonstrates that the combined teaching was the equivalent of full-time, as supported by the certification of one or more of the chief administrative officers of the schools involved, is considered to have completed one academic year of qualifying teaching.

(8) A borrower is not eligible for teacher loan forgiveness on a defaulted loan unless the borrower has made satisfactory repayment arrangements to re-establish title IV eligibility, as defined in § 682.200.

(9) A borrower may not receive loan forgiveness for qualifying teaching service under this section if the borrower receives a benefit for the same teaching service under subtitle D of title I of the National and Community Service Act of 1990.

(d) *Forgiveness amount.* (1) A qualified borrower is eligible for forgiveness of up to $5,000 of the aggregate amount of a borrower's subsidized or unsubsidized Federal Stafford or Federal Consolidation Loan obligation that is outstanding after the borrower completes his or her fifth consecutive complete academic year of teaching as described in paragraph (c) of this section. Only the outstanding portion of the consolidation loan that was used to repay an eligible subsidized or unsubsidized Federal Stafford loan, an eligible Direct Subsidized Loan, or an eligible Direct Unsubsidized Loan qualifies for loan forgiveness under this section.

(2) A borrower may not receive more than a total of $5,000 in loan forgiveness for outstanding principal and accrued interest under both this section and under section 34 CFR 685.217.

(3) The holder does not refund payments that were received from or on behalf of a borrower who qualifies for loan forgiveness under this section.

(e) *Authorized forbearance during qualifying teaching service and discharge processing.* (1) At the borrower's request, a holder grants a forbearance—

(i) Under § 682.211(h)(2)(ii)(C) and (h)(3)(iii), in annual increments for each of the years of qualifying teaching service, if the holder believes, at the time of each annual request, that the expected cancellation amount will satisfy the anticipated remaining outstanding balance on the loan at the time of the expected cancellation;

(ii) For a period not to exceed 60 days while the holder is awaiting a completed teacher loan forgiveness application from the borrower; and

(iii) For the period beginning on the date the holder receives a completed loan forgiveness application to the date the holder receives either a denial of the request or the loan discharge amount from the guaranty agency, in accordance with paragraph (f) of this section.

(2) At the conclusion of a forbearance authorized under paragraph (e)(1) of this section, the holder must resume collection activities and may capitalize any interest accrued and not paid during the forbearance period in accordance with § 682.202(b).

(3) Nothing in paragraph (e) of this section restricts holders from offering other forbearance options to borrowers who do not meet the requirements of paragraph (e)(1)(i) of this section.

(f) *Application and processing.* (1) A borrower, after completing the qualifying teaching service, requests loan forgiveness from the holder of the loan on a form approved by the Secretary.

(2)(i) The holder must file a request for payment with the guaranty agency on a teacher forgiveness discharge no later than 60 days after the receipt, from the borrower, of a completed teacher loan forgiveness application.

(ii) When filing a request for payment on a teacher forgiveness discharge, the holder must provide the guaranty agency with the completed loan forgiveness application submitted by the borrower and any required supporting documentation.

(iii) If the holder files a request for payment later than 60 days after the receipt of the completed teacher loan forgiveness application form, interest that accrued on the loan after the expiration of the 60-day filing period is ineligible for reimbursement by the Secretary, and the holder must repay all interest and special allowance received on the loan for periods after the expiration of the 60-day filing period. The holder cannot collect from the borrower any interest that is not paid by the Secretary under this paragraph.

(3)(i) Within 45 days of receiving the holder's request for payment, the guaranty agency must determine if the borrower meets the eligibility requirements for loan forgiveness under this section and must notify the holder of its determination of the borrower's eligibility for loan forgiveness under this section.

(ii) If the guaranty agency approves the discharge, it must, within the same 45-day period, pay the holder the amount of the discharge, up to $5,000, subject to paragraphs (c)(9), (d)(1) and (d)(2) of this section.

(4) After being notified by the guaranty agency of its determination of the eligibility of the borrower for the discharge, the holder must, within 30 days, inform the borrower of the determination. If the discharge is approved, the holder must also provide the borrower with information regarding any new repayment terms of remaining loan balances.

(5) Unless otherwise instructed by the borrower, the holder must apply the proceeds of the teacher forgiveness discharge first to any outstanding

unsubsidized Federal Stafford loan balances, next to any outstanding subsidized Federal Stafford loan balances, then to any eligible outstanding Federal Consolidation loan balances.

(g) *Claims for reimbursement from the Secretary on loans held by guaranty agencies.* In the case of a teacher loan forgiveness discharge applied to a defaulted loan held by the guaranty agency, the Secretary pays the guaranty agency a percentage of the amount discharged that is equal to the complement of the reinsurance percentage paid on the loan. The payment of up to $5,000 may also include interest that accrues on the discharged amount during the period from the date on which the guaranty agency received payment from the Secretary on a default claim to the date on which the guaranty agency determines that the borrower is eligible for the teacher loan forgiveness discharge. (Approved by the Office of Management and Budget under control number 1845–0020)

(Authority: 20 U.S.C. 1078–10)

PART 685—WILLIAM D. FORD FEDERAL DIRECT LOAN PROGRAM

4. The authority citation for Part 685 continues to read as follows:

Authority: 20 U.S.C. 1087a *et seq.*, unless otherwise noted.

§ 685.102 [Amended]

5. Section 685.102(b) is amended in paragraph (2) of the definition of ''Satisfactory repayment arrangement'' by removing the reference to ''34 CFR 685.215(d)(1)(ii)(E)'' and adding, in its place, ''34 CFR 685.220(d)(1)(ii)(E)''.

§ 685.200 [Amended]

6. Section 685.200 is amended by:

A. Removing from paragraph (a)(1)(v) ''34 CFR 668.7(b)'' and adding, in its place, ''34 CFR 668.32(e)(2) or (3)''.

B. Removing from paragraph (b)(1)(iv) ''34 CFR 668.7'' and adding, in its place ''34 CFR 668.32(g)''.

C. Removing from paragraph (c) ''§ 685.215(d)(1)(ii)(F)'' and adding, in its place, ''685.220(d)(1)(ii)(F)''.

§ 685.201 [Amended]

7. Section 685.201(c)(2) is amended by removing the reference to ''§ 685.216'' and by adding, in its place ''§ 685.220''.

8. Section 685.205 is amended by:

A. Redesignating paragraph (a)(5) as (a)(6).

B. Adding a new paragraph (a)(5).

C. Removing from paragraph (b)(6)(i) the reference to ''§ 685.213'' and adding, in its place, ''§ 685.214''.

D. Removing from paragraph (b)(6)(ii) the reference to ''§ 685.214'' and adding, in its place, ''§ 685.215''.

E. Removing from paragraph (b)(6)(iii) the reference to ''§ 685.215; or'' and adding, in its place, ''§ 685.216;''.

F. By redesignating paragraph (b)(6)(iv), as paragraph (b)(6)(v).

G. By adding a new paragraph (b)(6)(iv).

The additions read as follows:

§ 685.205 Forbearance.

(a) * * *

(5) The borrower—

(i) Is performing the type of service that would qualify the borrower for loan forgiveness under the requirements of the teacher loan forgiveness program in § 685.217; and

(ii) Is required, by the Secretary, before a forbearance is granted under § 685.205(a)(5)(i) to—

(A) Submit documentation for the period of the annual forbearance request showing the beginning and ending dates that the borrower is expected to perform, for that year, the type of service described in § 685.217(c); and

(B) Certify the borrower's intent to satisfy the requirements of § 685.217(c).

* * * * *

(b) * * *

(6) * * *

(iv) Under § 685.217; or

(Approved by the Office of Management and Budget under control number 1845–0021)

* * * * *

§ 685.210 [Amended]

9. Section 685.210(b)(2)(ii) is amended by removing the reference to ''§ 685.209(d)(2)'' and by adding, in its place ''§ 685.209(c)(4)''.

§ 685.211 [Amended]

10. Section 685.211(e)(4) is amended by removing the reference to ''§ 685.215'' and by adding, in its place, ''§ 685.220''.

11. Section 685.212 is amended by:

A. Removing from paragraph (d) the reference to ''§ 685.213'' and adding, in its place, ''§ 685.214''.

B. Removing from paragraph (e) the reference to ''§ 685.214'' and adding, in its place, ''§ 685.215''.

C. Removing from paragraph (f) the reference to ''§ 685.215'' and adding, in its place, ''§ 685.216''.

D. By adding a new paragraph (h).

The addition reads as follows:

§ 685.212 Discharge of a loan obligation.

* * * * *

(h) *Teacher loan forgiveness program.* If a new borrower meets the requirements in § 685.217, the Secretary repays up to $5,000 of the borrower's Direct Subsidized Loans, Direct Unsubsidized Loans, and, in certain cases, Direct Consolidation Loans.

§§ 685.214, 685.215, 685.216 [Redesignated as §§ 685.215, 685.216, and 685.220]

12. Sections 685.214, 685.215, and 685.216 are redesignated as §§ 685.215, 685.216, and 685.220, respectively.

§ 685.213 [Redesignated as § 685.214, § 685.213 Reserved]

13. Section 685.213 is redesignated as § 685.214, and § 685.213 is reserved.

§ 685.215 [Amended]

14. In § 685.215, paragraph (c)(5)(ii) is amended by removing the references to ''§ 685.213(d)'' and ''§ 685.213(e)'' and adding, in their place, ''§ 685.214(d)'' and ''§ 685.214(e)'', respectively.

§ 685.216 [Amended]

15. In § 685.216, paragraph (c)(1)(iii)(B) is amended by removing the references to ''§ 685.213(d)'' and ''§ 685.213(e)'' and adding, in their place, ''§ 685.214(d)'' and ''§ 685.214(e)'', respectively.

16. A new § 685.217 is added to read as follows:

§ 685.217 Teacher loan forgiveness program.

(a) *General.* The teacher loan forgiveness program is intended to encourage individuals to enter and continue in the teaching profession. For new borrowers, the Secretary will repay up to a combined total of $5,000 of subsidized and unsubsidized Federal Stafford Loans, Direct Subsidized Loans, Direct Unsubsidized Loans, and, in certain cases, Federal Consolidation Loans or Direct Consolidation Loans. The forgiveness program is only available to a borrower who has no outstanding loan balance under the FFEL Program or the Direct Loan Program on October 1, 1998 or who has no outstanding loan balance on the date he or she obtains a loan after October l, 1998. In addition, the borrower must have been employed as a full-time teacher for five consecutive complete academic years, at least one of which was after the 1997–1998 academic year, in certain eligible elementary or secondary schools that serve low-income families. The loan for which the borrower is seeking forgiveness must have been made prior to the end of the fifth year of qualifying teaching service.

(b) *Definitions.* The following definitions apply to this section:

Academic year means one complete school year at the same school, or two complete and consecutive half years at different schools, or two complete and consecutive half years from different school years at either the same school or different schools. Half years exclude summer sessions and generally fall within a twelve-month period. For schools that have a year-round program of instruction, a minimum of nine months is considered an academic year.

Elementary school means a public or nonprofit private school that provides elementary education as determined by State law or the Secretary if that school is not in a State.

Full-time means the standard used by a State in defining full-time employment as a teacher. For a borrower teaching in more than one school, the determination of full-time is based on the combination of all qualifying employment.

Secondary school means a public or nonprofit private school that provides secondary education as determined by State law or the Secretary if the school is not in a State.

Teacher means a person who provides direct classroom teaching or classroom-type teaching in a non-classroom setting, including Special Education teachers.

(c) *Borrower eligibility.* (1) A borrower may obtain loan forgiveness under this program if he or she has been employed as a full-time teacher for five consecutive complete academic years, at least one of which was after the 1997–1998 academic year, in an elementary or secondary school that—

(i) Is in a school district that qualifies for funds under title I of the Elementary and Secondary Education Act of 1965, as amended;

(ii) Has been selected by the Secretary based on a determination that more than 30 percent of the school's total enrollment is made up of children who qualify for services provided under title I; and

(iii) Is listed in the *Annual Directory of Designated Low-Income Schools for Teacher Cancellation Benefits.* If this directory is not available before May 1 of any year, the previous year's directory may be used.

(2) If the school at which the borrower is employed meets the requirements specified in paragraph (c)(1) of this section for at least one year of the borrower's five consecutive complete academic years of teaching and the school failed to meet those requirements in subsequent years, those subsequent years of teaching qualify for purposes of this section for that borrower.

(3) A borrower who is employed as an elementary school teacher must demonstrate knowledge and teaching skills in reading, writing, mathematics, and other areas of the elementary school curriculum, as certified by the chief administrative officer of the school in which the borrower was employed.

(4) A borrower who is employed as a secondary school teacher must teach in a subject area that is relevant to the borrower's academic major as certified by the chief administrative officer of the school in which the borrower was employed.

(5) The academic year may be counted as one of the borrower's five consecutive complete academic years if the borrower completes at least one-half of the academic year and the borrower's employer considers the borrower to have fulfilled his or her contract requirements for the academic year for the purposes of salary increases, tenure, and retirement if the borrower is unable to complete an academic year due to—

(i) A return to postsecondary education, on at least a half-time basis, that is directly related to the performance of the service described in this section;

(ii) A condition that is covered under the Family and Medical Leave Act of 1993 (FMLA) (19 U.S.C. 2654); or

(iii) A call or order to active duty status for more than 30 days as a member of a reserve component of the Armed Forces named in section 10101 of title 10, United States Code.

(6) If a borrower meets the requirements of paragraph (c)(5) of this section, the borrower's period of postsecondary education, active duty, or qualifying FMLA condition including the time necessary for the borrower to resume qualifying teaching no later than the beginning of the next regularly scheduled academic year, does not constitute a break in the required five consecutive years of qualifying teaching service.

(7) A borrower who teaches in more than one qualifying school during an academic year and demonstrates that the combined teaching was the equivalent of full-time, as supported by the certification of one or more of the chief administrative officers of the schools involved, is considered to have completed one academic year of qualifying teaching.

(8) A borrower is not eligible for teacher loan forgiveness on a defaulted loan unless the borrower has made satisfactory repayment arrangements to re-establish title IV eligibility, as defined in § 685.200(b).

(9) A borrower may not receive loan forgiveness for qualifying teaching service under this section if the borrower receives a benefit for the same teaching service under subtitle D of title I of the National and Community Service Act of 1990.

(d) *Forgiveness amount.* (1) A qualified borrower is eligible for forgiveness of up to $5,000 of the aggregate amount of a borrower's Direct Subsidized Loan, Direct Unsubsidized Loan, or Direct Consolidation Loan obligation that is outstanding after the borrower completes his or her fifth consecutive complete academic year of teaching as described in paragraph (c) of this section. Only the outstanding portion of a Direct Consolidation Loan that was used to repay an eligible subsidized or unsubsidized Federal Stafford loan, an eligible Direct Subsidized Loan, or an eligible Direct Unsubsidized Loan qualifies for loan forgiveness under this section.

(2) A borrower may not receive more than a total of $5,000 in loan forgiveness for outstanding principal and accrued interest under both this section and 34 CFR § 682.215.

(3) The Secretary does not refund payments that were received from or on behalf of a borrower who qualifies for loan forgiveness under this section.

(e) *Application.* (1) A borrower, after completing the qualifying teacher service, must request loan forgiveness from the Secretary on a form provided by the Secretary.

(2) If the Secretary determines that the borrower meets the eligibility requirements for loan forgiveness under this section, the Secretary—

(i) Notifies the borrower of this determination; and

(ii) Unless otherwise instructed by the borrower, applies the proceeds of the loan forgiveness first to any outstanding Direct Unsubsidized Loan balances, next to any outstanding Direct Subsidized Loan balances, next to any qualifying Direct Unsubsidized Consolidation Loan balances, and last to any qualifying outstanding Direct Subsidized Consolidation Loan balances.

(3) If the Secretary determines that the borrower does not meet the eligibility requirements for loan forgiveness under this section, the Secretary notifies the borrower of this determination.

(Approved by the Office of Management and Budget under the control number 1845–0021)

(Authority: 20 U.S.C. 1087a *et seq.*)

§§ 685.218, 685.219 [Added and Reserved]

17. New §§ 685.218 and 685.219 are added and reserved.

[FR Doc. 00–27737 Filed 10–31–00; 8:45 am]

BILLING CODE 4000–01–P

Federal Register

Wednesday,
November 1, 2000

Part VII

Department of Education

34 CFR Parts 668, 682, 685, and 690

Student Assistance General Provisions, Federal Family Education Loan Program, William D. Ford Federal Direct Loan Program, and Federal Pell Grant Program; Final Rule

DEPARTMENT OF EDUCATION

34 CFR Parts 668, 682, 685, and 690

RIN 1845–AA17

Student Assistance General Provisions, Federal Family Education Loan Program, William D. Ford Federal Direct Loan Program, and Federal Pell Grant Program

AGENCY: Office of Postsecondary Education, Department of Education.

ACTION: Final regulations.

SUMMARY: The Secretary amends the Student Assistance General Provisions, Federal Family Education Loan (FFEL) Program, William D. Ford Federal Direct Loan (Direct Loan) Program, and Federal Pell Grant Program regulations. In these final regulations, the requirements for the loan default reduction and prevention measures are moved to a new subpart and revised for clarity and consistency. The Secretary also makes various substantive changes to these requirements.

DATES: These regulations are effective July 1, 2001.

FOR FURTHER INFORMATION CONTACT: Kenneth Smith, U.S. Department of Education, 400 Maryland Avenue, SW., ROB–3, room 3045, Washington, DC 20202–5447. Telephone: (202) 708–8242. If you use a telecommunications device for the deaf (TDD), you may call the Federal Information Relay Service (FIRS) at 1–800–877–8339.

Individuals with disabilities may obtain this document in an alternative format (e.g., Braille, large print, audiotape, or computer diskette) on request to the contact person listed in the preceding paragraph.

SUPPLEMENTARY INFORMATION: On August 2, 2000, we published a notice of proposed rulemaking (NPRM) for the Student Assistance General Provisions, FFEL Program, Direct Loan Program, and Federal Pell Grant Program in the **Federal Register** (65 FR 47590). In the preamble to the NPRM, we discussed on pages 47591 through 47601 the major changes proposed in that document. That discussion will not be repeated here. To fully understand the changes, we strongly encourage a review of the preamble of the NPRM. The following list summarizes those major changes:

- Moving the regulations governing the calculation of cohort default rates and challenges to those rates that were in previous § 668.17 to a new subpart M of part 668, revising the regulations for clarity and consistency, and removing Appendix D to part 668.
- In § 668.184, providing detailed regulations for determining an institution's cohort default rate after certain types of institutional restructuring.
- In §§ 668.185(c) and 668.195, amending certain regulations for a participation rate index challenge or appeal.
- In § 668.187(a)(1), imposing a loss of participation from the FFEL and Direct Loan programs against an institution having a cohort default rate greater than 40 percent, without requiring the use of a proceeding under subpart G of part 668.
- In § 668.187(a)(2), imposing a loss of participation in the FFEL Program against an institution with three consecutive cohort default rates of 25 percent or greater, even if Direct Loans are included in those cohort default rates, without the use of a proceeding under subpart G of part 668.
- In § 668.188, providing for the application of an institution's loss of eligibility to a related or successor institution when certain criteria are met, to prevent an institution from evading the consequences of cohort default rates.
- In § 668.192, allowing an institution that is provisionally certified under § 668.16(m) to submit an erroneous data appeal.
- In § 668.193, allowing all institutions to appeal their most recent cohort default rates on the basis of improper loan servicing or collection.
- In § 668.194, restoring certain eligibility criteria, inadvertently omitted in previous regulations, and revising submission requirements for an economically disadvantaged appeal.
- In § 668.196, providing for the submission of an average rates appeal by an institution that is subject to loss of participation based on a cohort default rate greater than 40 percent.
- In § 668.197, providing for the submission of a thirty-or-fewer borrowers appeal by an institution that is subject to loss of participation based on a cohort default rate greater than 40 percent.
- In § 668.198, exempting a special institution that is in compliance with this section from a loss of eligibility based on a cohort default rate greater than 40 percent.

These final regulations contain several significant changes from the NPRM. We fully explain these changes in the Analysis of Comments and Changes elsewhere in this preamble.

Effect of Regulations on Rights or Obligations

These final regulations will be a new subpart M of part 668 of the Department's regulations. This new subpart is a reorganization of provisions governing the cohort default rate calculation and challenge process, which are currently in 34 CFR 668.17. As discussed elsewhere in this preamble, a few of these provisions have also been revised. Generally, these changes do not affect procedural or substantive rights of any party. However, there are a few instances in which those rights have been modified. To the extent that an institution has or had a right or obligation under § 668.17 before the effective date of these regulations, the institution's exercise or failure to exercise that right or meet that obligation is binding after the effective date of these regulations. These final regulations govern all rights and obligations that may apply to an institution or other party after their effective date.

Analysis of Comments and Changes

The regulations in this document were developed through the use of negotiated rulemaking. Section 492 of the Higher Education Act of 1965, as amended (HEA) requires that, before publishing any proposed regulations to implement programs under Title IV of the HEA, the Secretary obtain public involvement in the development of the proposed regulations. After obtaining advice and recommendations, the Secretary must conduct a negotiated rulemaking process to develop the proposed regulations.

These regulations were published in proposed form on August 2, 2000, following the completion of the negotiated rulemaking process. The Secretary invited comments on the proposed regulations by September 18, 2000, and 17 comments were received. An analysis of the comments and of the changes in the regulations since publication of the NPRM follows.

We discuss substantive issues under the sections of the regulations to which they pertain. Generally, we do not address technical and other minor changes and suggested changes the law does not authorize the Secretary to make.

General

Comments: In general, the commenters supported the proposed regulations and commended us for our efforts to make the requirements for cohort default rates clearer and more consistent. One commenter specifically supported the removal of the previous Appendix D to part 668, stating that it is important to give institutions the flexibility they need to manage cohort default rates.

Discussion: We appreciate the commenters' support for the proposed

regulations and the work of the members of the negotiated rulemaking committee that resulted in the proposed regulations.

Changes: None.

Provisional Certification (§ 668.16(m)(2)(i))

Comments: None.

Discussion: As we stated in the preamble to the NPRM (65 FR 47599), during negotiated rulemaking we agreed to change the regulations to allow institutions to submit erroneous data appeals to contest provisional certification under § 668.16(m). We have subsequently reviewed the processes for implementing this new appeal and have determined that there is no need to provisionally certify every institution that has one cohort default rate that falls between 25 percent and 40 percent. In some cases, it may be just as effective to apply other current safeguards to address this issue at the institution and to protect the Federal Government's interest. Improved reporting practices, a holistic case management approach, the availability of technical assistance, and other current safeguards may be adequate to address, in some cases, issues associated with an excessive cohort default rate.

Changes: We have revised § 668.16(m)(2)(i) to provide for the Secretary's discretion in provisionally certifying an institution under that paragraph.

Submission Deadlines (§ 668.182(c))

Comments: Three commenters agreed with our use of a consistent definition for ''days'' throughout these regulations, instead of using ''calendar days'' as a measure for some requirements and ''working days'' as a measure for other requirements. One commenter agreed with our proposal to define ''days'' as ''calendar days'' because ''calendar days'' is easier to understand, while the concept of a ''working day'' may lend itself to different interpretations and is more difficult to monitor.

However, one commenter questioned whether the change from calendar days to working days would allow institutions less time to comply with the regulations. Another commenter recommended that the regulations define ''days'' as ''working days'' because it would allow institutions more time to submit requests and appeals during the cohort default rate process. This commenter stated that requiring an institution to submit a completed appeal within 30 calendar days may place an undue burden on institutions that are also trying to perform the other administrative functions required for participation in the Title IV, HEA programs.

Discussion: In general, these regulations allow institutions the same amount of time, or more, to submit challenges, requests for adjustments, or appeals, when compared to previous regulations. The only exception is if an institution has to pay a fee to a data manager during a loan servicing appeal, under § 668.193(c)(5). Previously, an institution had 15 working days to pay this fee; under the new regulations, an institution has 15 calendar days to pay this fee.

We do not agree that the term ''days'' should mean ''working days'' in subpart M of part 668. We also do not agree that it is unreasonable to require an institution to submit a completed appeal within 30 calendar days. In fact, it is our experience that almost every institution meets the deadline.

Changes: None.

Entering Repayment on Federal Supplemental Loans for Students (SLS) Program Loans (§ 668.182(f)(2))

Comments: One commenter stated that there were inaccuracies in proposed § 668.182(f)(2) in the definition of the date that a Federal SLS loan enters repayment for the purposes of calculating a cohort default rate.

Proposed § 668.182(f)(2)(i) stated that a Federal SLS loan is considered to enter repayment at the same time as the borrower's Federal Stafford loan enters repayment, if the borrower received a Federal Stafford loan for the same loan period. The commenter noted that 34 CFR 682.200 and 682.209(a)(2)(iii) do not require that the borrower receive the Federal SLS and Federal Stafford loans for the same loan period. Instead, under those sections, the Federal SLS and Federal Stafford loans must be obtained during the same period of continuous enrollment, which may include one or more loan periods, for the Federal SLS loan to enter repayment at the same time as the Federal Stafford loan.

In addition, under proposed § 668.182(f)(2)(ii), for all other purposes, a Federal SLS loan would be considered to enter repayment on the day after the student ceased to be enrolled at the institution on at least a half-time basis in an educational program leading to a degree, certificate, or other recognized educational credential. The commenter stated that loans do not enter repayment because a student ceases to be enrolled at least half-time at a particular institution; they enter repayment because the student ceases to be enrolled at least half-time. A student might continue his or her studies at another institution, and the loans would not enter repayment until the student ceased to be enrolled at least half-time at that second institution.

Discussion: We agree with the commenter.

Changes: We have revised § 668.182(f)(2) to correct the errors the commenter described.

Entering Repayment on Consolidation Loans (§ 668.183(b))

Comments: None.

Discussion: After further review, we have concluded that the language in proposed §§ 668.182(f)(3)(ii) and 668.183(b)(2), which describes the inclusion of loans made under the Federal Consolidation Loan Program and the Federal Direct Consolidation Loan Program in the calculation of cohort default rates, is unnecessarily complex.

Changes: We have removed proposed §§ 668.182(f)(3)(ii) and 668.183(b)(2) and revised § 668.183(b)(1) to clarify the inclusion of consolidation loans in the calculation of a cohort default rate.

Calculation of Cohort Default Rates for Proprietary, Non-degree-granting Institutions (§ 668.183(c)(1)(iii))

Comments: Under § 668.183(c)(1)(iii), certain loans that are repaid under the Direct Loan Program's income contingent repayment plan are considered to be in default for the purpose of calculating a non-degree-granting proprietary institution's cohort default rate. As noted in the preamble to the NPRM (65 FR 47591), this provision does not make any change to current regulations and was presented to the negotiating committee only as part of the overall restructuring of the regulations.

One commenter agreed that these regulations are appropriate and stated that degree-granting institutions with historically low default rates should not be subject to this regulatory provision. Seven commenters argued that these regulations are inappropriate. They claimed that these regulations unfairly target non-degree-granting proprietary institutions. Several commenters argued that if these requirements are appropriate for non-degree-granting proprietary institutions, then they should be appropriate for, and applied to, all types of institutions.

The commenters believed that there is not a significant risk that an institution could have a low cohort default rate even though a large proportion of its former students are making only minimal or no payments under the income contingent repayment plan. They did not believe that this risk is an adequate reason for the special

treatment of loans being repaid through income contingent repayment included in the proposed regulations. They noted that, since this requirement applies only to borrowers who are repaying Direct Loans, it may make some institutions reluctant to participate in the Direct Loan Program or to counsel borrowers to apply for Direct Consolidation Loans.

The commenters also argued that this provision is contrary to the purpose of the Direct Loan Program's income contingent repayment plan. They contended that this repayment plan was designed to help students repay their loans, even if the students are starting new careers or are unable to work full time, and that this repayment plan is a legitimate option for all eligible borrowers.

Discussion: We appreciate the commenters' concerns, but continue to believe that this is a potential area for abuse. Without this provision, an institution could have a low cohort default rate, even though a large proportion of its former students are making only minimal or no payments on their loans. Though an institution cannot require all its borrowers to choose one repayment plan, it can, through its counseling, increase the likelihood of a borrower's choosing to repay under the Direct Loan Program's income contingent repayment plan.

We also continue to believe that this provision should apply only to non-degree-granting proprietary institutions. As we stated in the preamble to the NPRM, our experience and data show that student borrowers at non-degree-granting proprietary institutions are at a higher risk of default than other student borrowers. The cohort default rates of non-degree-granting proprietary institutions are, on average, consistently higher than those of other institutions. Since non-degree-granting proprietary institutions provide students with education or training needed to secure employment, a borrower's ability to make substantial payments on a loan reflects the value of the education or training provided by the institution in the marketplace.

Changes: None.

Reinsurance and Default (§ 668.183(c)(2)(ii))

Comments: None.

Discussion: Proposed § 668.183(c)(2)(ii) stated that a borrower is not considered to be in default based on a loan that is no longer reinsured by us. This statement is not correct. A loan that is no longer reinsured by us is removed from the cohort completely: the borrower is neither counted in the cohort nor considered to be a defaulter. However, this is not the situation that we intended to address in this paragraph, and since it is inherent in the cohort default rate process that a loan must be reinsured by us to be included in the calculation, it does not need to be stated explicitly in regulations.

We had intended for § 668.183(c)(2)(ii) to address situations in which a lender repurchases a loan, before the end of the fiscal year immediately following the fiscal year in which it entered repayment, having recognized that the lender's claim for insurance on the loan was submitted or paid in error. In those situations, the loan is not considered to be in default.

Changes: We have revised § 668.183(c)(2)(ii) to provide that, for the purposes of calculating a cohort default rate, a borrower is not considered to be in default on certain repurchased loans.

Change in Status and Change in Institutional Structure or Identity (§ 668.184(a)(3))

Comments: None.

Discussion: Section 668.184 describes how an institution's cohort default rate is determined after certain changes in institutional structure or identity. Under § 668.188, a loss of eligibility imposed against one institution is also applied to one or more other institutions, in certain circumstances, following a change in institutional structure or identity. Because these separate provisions both deal with changes in institutional structure or identity, we believe that, without clarification, there may be confusion about whether both provisions could apply to the same institution based on the same circumstance.

The application of one of these sections to an institution does not preclude the application of the other section to that same institution based on the same circumstance. The sections are separate requirements. A determination of an institution's cohort default rate under § 668.184 does not preclude the application of a loss of eligibility under § 668.188, and the application of a loss of eligibility under § 668.188 does not preclude the determination of an institution's cohort default rate under § 668.184.

Changes: We have renumbered proposed § 668.184(a)(3) as § 668.184(a)(4) and added a new § 668.184(a)(3) to clarify that a change of status that affects the calculation of an institution's cohort default rate under § 668.184 may also affect that institution's eligibility to participate in Title IV, HEA programs under § 668.187 or § 668.188.

Data Manager's Ability To Deny a Challenge, Request for Adjustment, or Appeal (§§ 668.185(a)(4) and 668.189(c))

Comments: Three commenters noted that proposed §§ 668.185(a)(4) and 668.189(c) state that the Department may deny a school's challenge, request for adjustment, or appeal if an institution does not comply with the requirements in the Cohort Default Rate Guide. The commenters suggested that guarantors, as data managers, should have the same latitude to deny non-compliant challenges and appeals as the Department.

Discussion: Only the Secretary may deny an institution's challenge, request for adjustment, or appeal. Data managers do not have the authority to make this determination. If a data manager receives an institution's request for information during the cohort default rate process but is unable to respond because the request lacks necessary information or is not in the required format, then the data manager must ask the institution to submit the missing information or to submit the request in the required format. However, there is no change to the timeframe for the institution's submission; the institution must send its corrected request for information to the data manager within the original timeframe.

Changes: None.

Request for Loan Record Detail Report (§ 668.186(c)(1))

Comments: None.

Discussion: In proposed § 668.186(c)(1), awkward language could have been read to mean that an institution could not request less than two loan record detail reports at a time. Most institutions will only need to request one loan record detail report at a time.

Changes: We have revised § 668.186(c)(1) to clarify that an institution may request any loan record detail report that lists loans included in its cohort default rate calculation.

Loss of Participation for Institutions With Cohort Default Rates Exceeding 40 Percent (§ 668.187(a)(1))

Comments: One commenter supported changes in § 668.187(a)(1), stating that the new regulations would provide institutions that have one cohort default rate over 40 percent with the same opportunities to challenge, request an adjustment, or appeal as those afforded to institutions with three consecutive cohort default rates of 25 percent or more. The commenter stated that the new regulations provide a more

equitable process for schools with one cohort rate over 40 percent.

Discussion: We agree with the commenter.

Changes: None.

Preventing Evasion of the Consequences of Cohort Default Rates (§ 668.188(a)(2))

Comments: In the preamble to the NPRM (65 FR 47597), we stated that, in general, an institution is offering an educational program at ''substantially the same address'' as an ineligible institution if its site is the same as the ineligible institution's site or is physically located close enough to the ineligible institution's site to demonstrate that the educational programs it provides are intended to serve the same population.

Four commenters felt that this statement was an overly broad interpretation of the regulatory criterion, and they asked us to revise our interpretation in this preamble. Some commenters contended that this interpretation would be impossible to apply consistently, because it would require an extensive analysis of the population served by the institutions. The commenters also noted that the statement in the preamble to the NPRM could be read to suggest that we will treat institutions that are located miles apart as being located at ''substantially the same address.'' Three commenters stated that, as distance learning becomes more accepted for all or parts of a program, any school that uses computerized instruction over the internet could be considered to be serving the same population.

The commenters argued that ''substantially the same address'' should refer to the same building, an adjacent building, the same block, across the street, etc. They stated that these were the examples offered during negotiated rulemaking, to gain consensus for this requirement, and that the consensus achieved during negotiated rulemaking did not include the broad interpretation they believed was reflected in the preamble to the NPRM.

Discussion: The purpose of § 668.188 is to keep institutions from evading the consequences of their cohort default rates through the use of measures such as branching, consolidation, change of ownership or control, or any similar devices. Limiting the interpretation of ''substantially the same address'' to the specific locations the commenters suggest would not be appropriate for many circumstances. An institution that was able to relocate outside those specific parameters while continuing to serve the same population of students could, in effect, continue to function as the same institution and evade the consequences of its cohort default rates.

For example, after Institution A becomes ineligible to participate in the FFEL and Direct Loan programs, its owner changes Institution A's name to Institution B and moves it 10 blocks away from Institution A's site. Institutions A and B are located in a small city, where no other institutions provide the same type of educational programs, and they serve the same population of students. One week after Institution A becomes ineligible, Institution B opens for business with the same owner and staff. Under the interpretation that the commenters suggest, Institution A's prior loss of eligibility would not be applied to Institution B because their sites are located 10 blocks apart rather than in adjacent buildings, on the same block, across the street, etc.

This result does not serve the goals of section 435(m)(3) of the HEA, which these regulations are intended to implement. In the example, Institution B was created from Institution A merely by changing the name and location. The institutions are owned by the same person, and since they are located in a small city, they provided the same educational programs to the same population of students. It is clear that the change in status was instituted in order to evade the consequences of Institution A's cohort default rates, and also that Institution A is continuing to function as Institution B. In this case, limiting the interpretation of ''substantially the same address'' to the specific locations the commenters mention would only prompt the owner to locate Institution B at least one building beyond that narrowly-defined area. It would not prevent Institution B from evading the consequences of Institution A's cohort default rates.

During the negotiated rulemaking discussions, we did not intend to limit the interpretation of this provision to a specific geographical area. If we had intended to create a narrowly-defined rule, we would have defined that geographical area specifically in the regulatory language, rather than using the more general term, ''substantially the same address.'' The statement included in the preamble to the NPRM was intended to provide an explanation of the circumstances under which that term could extend further than a narrowly-defined geographical area.

We recognize that this approach may result in some uncertainty among institutions contemplating various changes in status. For this reason, a procedure is included in these regulations for institutions to make inquiries to us. If an institution is undergoing a change in institutional structure or identity and is unsure whether its site is located at ''substantially the same address'' as another institution's site, it may contact us for an initial determination under § 668.188(d).

Changes: None.

Initial Determination of the Effect of an Anticipated Change on an Institution's Eligibility (§ 668.188(d))

Comments: None.

Discussion: Proposed § 668.188(d) encourages an institution to contact us for an initial determination of the effect of an anticipated change on the institution's eligibility. As written, the proposed regulations did not specify the format for the institution's request or for our response. To ensure that an initial determination is adequately documented, both the institution's request for the initial determination and our response need to be in writing.

Changes: We have revised § 668.188(d) to require institutions' requests for initial determinations and our responses to be in writing.

Requirements for Data Managers' Responses (§ 668.189(e)(2))

Comments: None.

Discussion: Proposed § 668.189(e)(2) stated that correspondence sent to us by a data manager as part of the cohort default rate process ''should'' be in a format acceptable to us. On further consideration, however, we have determined that the use of the word ''should'' created an ambiguity. The paragraph did not specify whether it required or merely encouraged data managers to send us correspondence in a format acceptable to us. This ambiguity needs to be resolved.

The word ''should'' was added to § 668.189(e)(2) during negotiations. Non-Federal negotiators asked us to change proposed language, which provided that the data ''must be in a format acceptable to us,'' to ''should be in a format acceptable to us.'' They made this request so the requirement for data managers would be less rigid and more similar to requirements for institutions, under § 668.189(c), which state that we ''may'' (instead of ''will'') deny an institution's request for adjustment or appeal if it does not meet certain requirements.

On further consideration, however, we have determined that changing the language did not make the provisions similar, since an institution risks the denial of its appeal if its request is not in an acceptable format. In contrast, a guaranty agency would not be subject to

any consequence for not providing data in an acceptable format.

Changes: We have revised § 668.189(e)(2) to clarify the requirement for data managers by making it more similar to the corresponding requirement for institutions, under § 668.189(c). The revised regulations allow guaranty agencies some flexibility, but they also allow the Secretary to require a guaranty agency to provide data in a specified format.

Submission of Erroneous Data Appeals (§ 668.192(a)(2))

Comments: None.

Discussion: Proposed § 668.192(a)(2) did not fully explain the circumstances under which an institution may submit an erroneous data appeal. The proposed regulations stated that an institution may submit an erroneous data appeal if a comparison of its loan record detail reports, for the draft and official cohort default rates, shows that certain data have been newly included, excluded, or otherwise changed. However, in order for an institution to submit an erroneous data appeal for that new data, it must also dispute the data's accuracy. Though this requirement is included in § 668.192(c), as it relates to our determination on an erroneous data appeal, it also needs to be clearly stated for institutions in § 668.192(a)(2).

Changes: We have revised § 668.192(a)(2) to more clearly reflect the criteria for an erroneous data appeal.

Requirements for Submitting Loan Servicing Appeals (§ 668.193(c)(2))

Comments: None.

Discussion: Under proposed § 668.193(c)(2), an institution that is requesting loan servicing records would send the data manager the ''list of students that we provided to you.'' This phrase refers to the ''loan record detail report,'' which is defined in § 668.182(h). To avoid confusion, we have decided to use the term ''loan record detail report'' in § 668.193(c)(2).

Changes: In § 668.193(c)(2), we have changed ''list of students that we provided to you'' to ''loan record detail report.''

Summaries of Eligibility and Submission Requirements for Challenges, Adjustments, and Appeals (Appendix A to Subpart M of Part 668)

Comments: After the NPRM was published, we sent a formatted copy of the proposed Appendix A to a focus group comprised of eight representatives of the financial aid community. We asked for their comments on the usefulness and understandability of the tables in Appendix A. Three commenters responded to our request. Although the commenters appeared to generally understand the tables, their responses identified certain areas in which the tables and their introductions need to be improved.

Discussion: We appreciate the commenters' help and have accepted most of their suggestions.

Changes: We have revised the first table, under ''I. Summary of Submission Eligibility,'' so that it contains a ''Yes'' or a ''No'' in each cell, and we have reformatted the table so that its information is arranged and identified more consistently. In the second table, under ''II. Summary of Submission Deadlines,'' we have made several minor formatting and text changes and have rewritten the introductory language to more clearly specify the starting date for each timeframe described in the table, including the starting dates for timeframes when an action is not always required (identified in the table by a dotted border).

However, we did not make all of the changes that the commenters suggested:

- Instead of removing the information associated with the draft cohort default rate process from the first table and adding a separate table for that information, we have specified within the first table that sanctions are never based on draft cohort default rates.
- We have not included page numbers with citations. It would be impossible to keep the page numbers updated so that they would always identify the text as it is first printed in the **Federal Register** and subsequently printed in each year's version of the *Code of Federal Regulations.*
- We have not re-ordered the columns in the second table so that challenges, adjustments, and appeals are presented in the order of their appearance in the regulations. When printed in the *Code of Federal Regulations,* this table will be divided in half and printed on facing pages. If the columns were arranged in the order of the requirements' appearance in the regulations, the columns for §§ 668.191 and 668.192 would be printed on different pages, and it would not be possible to note their common submission requirements.
- We have not included definitions of the terms ''you'', ''we'', and ''data manager'' in Appendix A. This appendix will be published in the Code of Federal Regulations as part of subpart M of part 668. It will not be separated from this subpart by other regulations or appendices, so there is no need to repeat these definitions.
- Instead of explaining in the second table the reason that a school would not receive a loan record detail report with its cohort default rate, we have included this information as an example in the introductory language for the table. There is no space in the table to insert this explanation.

Executive Order 12866

We have reviewed these final regulations in accordance with Executive Order 12866. Under the terms of the order we have assessed the potential costs and benefits of this regulatory action.

The potential costs associated with the final regulations are those resulting from statutory requirements and those we have determined to be necessary for administering these programs effectively and efficiently.

In assessing the potential costs and benefits—both quantitative and qualitative—of these final regulations, we have determined that the benefits of the regulations justify the costs.

We have also determined that this regulatory action does not unduly interfere with State, local, and tribal governments in the exercise of their governmental functions.

We summarized the potential costs and benefits of these final regulations in the preamble to the NPRM (65 FR 47590).

Paperwork Reduction Act of 1995

The Paperwork Reduction Act of 1995 does not require you to respond to a collection of information unless it displays a valid Office of Management and Budget (OMB) control number. We display the valid OMB control number assigned to the collection of information in these final regulations at the end of the affected sections of the regulations.

Intergovernmental Review

The Federal Supplemental Educational Opportunity Grant Program and the Leveraging Educational Assistance Partnership are subject to Executive Order 12372 and the regulations in 34 CFR part 79. One of the objectives of the Executive order is to foster an intergovernmental partnership and a strengthened federalism by relying on processes developed by State and local governments for coordination and review of proposed Federal financial assistance.

In accordance with the order, we intend this document to provide early notification of our specific plans and actions for these programs.

The Federal Family Education Loan, Federal Supplemental Loans for

Students, Federal Work-Study, Federal Perkins Loan, Federal Pell Grant, and William D. Ford Federal Direct Loan programs are not subject to Executive Order 12372 and the regulations in 34 CFR part 79.

Assessment of Educational Impact

In the NPRM we requested comments on whether the proposed regulations would require transmission of information that any other agency or authority of the United States gathers or makes available.

Based on the response to the NPRM and on our review, we have determined that these final regulations do not require transmission of information that any other agency or authority of the United States gathers or makes available.

Electronic Access to This Document

You may view this document in text or Adobe Portable Document Format (PDF) on the Internet at the following sites:

http://ocfo.ed.gov/fedreg.htm
http://ifap.ed.gov/dev_csb/new/home.nsf

To use PDF you must have Adobe Acrobat Reader, which is available free at the first of the previous sites. If you have questions about using PDF, call the U.S. Government Printing Office (GPO), toll free, at 1–888–293–6498; or in the Washington, DC, area at (202) 512–1530.

Note: The official version of this document is the document published in the **Federal Register**. Free Internet access to the official edition of the **Federal Register** and the Code of Federal Regulations is available on GPO Access at: http://www.access.gpo.gov/nara/index.html.

(Catalog of Federal Domestic Assistance Numbers: 84.007 Federal Supplemental Educational Opportunity Grant Program; 84.032 Federal Family Education Loan Program; 84.032 Federal PLUS Program; 84.032 Federal Supplemental Loans for Students Program; 84.033 Federal Work-Study Program; 84.038 Federal Perkins Loan Program; 84.063 Federal Pell Grant Program; 84.069 Leveraging Educational Assistance Partnership; and 84.268 William D. Ford Federal Direct Loan Program)

List of Subjects

34 CFR Part 668

Administrative practice and procedure, Colleges and universities, Consumer protection, Education, Grant programs—education, Loan programs—education, Reporting and recordkeeping requirements, Student aid, Vocational education.

34 CFR Parts 682 and 685

Administrative practice and procedure, Colleges and universities, Loan programs—education, Reporting and recordkeeping requirements, Student aid, Vocational education.

34 CFR Part 690

Colleges and universities, Education of disadvantaged, Grant programs—education, Reporting and recordkeeping requirements, Student aid.

Dated: October 24, 2000.

Richard W. Riley,

Secretary of Education.

For the reasons discussed in the preamble, the Secretary amends parts 668, 682, 685, and 690 of title 34 of the Code of Federal Regulations as follows:

PART 668—STUDENT ASSISTANCE GENERAL PROVISIONS

1. The authority citation for Part 668 is amended to read as follows:

Authority: 20 U.S.C. 1001, 1002, 1003, 1085, 1088, 1091, 1092, 1094, 1099c, and 1099c–1, unless otherwise noted.

§ 668.14 [Amended]

2. In § 668.14, paragraph (b)(15)(iii) is removed.

3. Section 668.16 is amended—

A. In paragraph (m)(1), by removing ''an FFEL Program cohort default rate, a Direct Loan cohort rate, or where applicable, a weighted average cohort rate'' and adding, in its place, ''a cohort default rate''.

B. In paragraph (m)(1)(i), by removing ''As defined in § 668.17'' and adding, in its place, ''Calculated under subpart M of this part''.

C. By revising paragraph (m)(2).

§ 668.16 Standards of administrative capability.

* * * * *

(m) * * *

(2)(i) However, if the Secretary determines that an institution's administrative capability is impaired solely because the institution fails to comply with paragraph (m)(1) of this section, the Secretary allows the institution to continue to participate in the Title IV, HEA programs but may provisionally certify the institution in accordance with § 668.13(c); and

(ii) The institution may appeal the loss of full participation in a Title IV, HEA program under paragraph (m)(1) of this section by submitting an erroneous data appeal in writing to the Secretary in accordance with and on the grounds specified in subpart M of this part;

* * * * *

§ 668.17 [Removed and reserved]

4. Section 668.17 is removed and reserved.

§ 668.26 [Amended]

5. In § 668.26, paragraph (a)(6) is amended by removing ''§ 668.17(c)'' and adding, in its place, ''subpart M of this part''.

§ 668.46 [Amended]

6. In § 668.46, paragraph (c)(7) is amended by removing ''Appendix E to this part'', and adding, in its place, ''appendix A to this subpart''.

7. Section 668.85 is amended—

A. By revising paragraph (b)(1)(ii).

B. In paragraph (b)(3), by removing the third sentence.

§ 668.85 Suspension proceedings.

* * * * *

(b) * * *

(1) * * *

(ii) Specifies the proposed effective date of the suspension, which is at least 20 days after the date of mailing of the notice of intent;

* * * * *

8. Section 668.86 is amended—

A. By revising paragraph (b)(1)(ii).

B. In paragraph (b)(3), by removing the third sentence.

§ 668.86 Limitation or termination proceedings.

* * * * *

(b) * * *

(1) * * *

(ii) Specifies the proposed effective date of the limitation or termination, which is at least 20 days after the date of mailing of the notice of intent;

* * * * *

§ 668.90 [Amended]

9. In § 668.90, paragraphs (a)(1)(iii)(D) and (a)(3)(iv) are removed; and paragraphs (a)(3)(v), (a)(3)(vi), and (a)(3)(vii) are redesignated as paragraphs (a)(3)(iv), (a)(3)(v), and (a)(3)(vi), respectively.

§ 668.171 [Amended]

10. In § 668.171, paragraph (b)(1) is amended by removing ''appendices F and G'' and adding, in its place, ''appendices A and B to this subpart''.

§ 668.172 [Amended]

11. Section 668.172 is amended—

A. In the heading for paragraph (a), by removing ''Appendices F and G'', and adding, in its place, ''Appendices A and B''.

B. In paragraph (a), by removing ''appendices F and G to this part'' and adding, in its place, ''appendices A and B to this subpart''.

C. In paragraph (b), by removing ''appendix F'' and adding, in its place, ''appendix A''; and by removing

''appendix G'' and adding, in its place, ''appendix B''.

12. A new subpart M is added to Part 668 to read as follows:

Subpart M—Cohort Default Rates

Sec.

668.181 Purpose of this subpart.
668.182 Definitions of terms used in this subpart.
668.183 Calculating and applying cohort default rates.
668.184 Determining cohort default rates for institutions that have undergone a change in status.
668.185 Draft cohort default rates and your ability to challenge before official cohort default rates are issued.
668.186 Notice of your official cohort default rate.
668.187 Consequences of cohort default rates on your ability to participate in Title IV, HEA programs.
668.188 Preventing evasion of the consequences of cohort default rates.
668.189 General requirements for adjusting official cohort default rates and for appealing their consequences.
668.190 Uncorrected data adjustments.
668.191 New data adjustments.
668.192 Erroneous data appeals.
668.193 Loan servicing appeals.
668.194 Economically disadvantaged appeals.
668.195 Participation rate index appeals.
668.196 Average rates appeals.
668.197 Thirty-or-fewer borrowers appeals.
668.198 Relief from the consequences of cohort default rates for special institutions.
Appendix A to Subpart M of Part 668—Summaries of eligibility and submission requirements for challenges, adjustments, and appeals.
Appendix B to Subpart M of Part 668—Sample default management plan for special institutions to use when complying with § 668.198.

§ 668.181 Purpose of this subpart.

Your cohort default rate is a measure we use to determine your eligibility to participate in various Title IV, HEA programs. We may also use it for determining your eligibility for exemptions, such as those for certain disbursement requirements under the FFEL and Direct Loan Programs. This subpart describes how cohort default rates are calculated, some of the consequences of cohort default rates, and how you may request changes to your cohort default rates or appeal their consequences. Under this subpart, you submit a ''challenge'' after you receive your draft cohort default rate, and you request an ''adjustment'' or ''appeal'' after your official cohort default rate is published.

(Approved by the Office of Management and Budget under control number 1845–0022)

(Authority: 20 U.S.C. 1082, 1085, 1094, 1099c)

§ 668.182 Definitions of terms used in this subpart.

We use the following definitions in this subpart:

(a) *Cohort.* Your cohort is a group of borrowers used to determine your cohort default rate. The method for identifying the borrowers in a cohort is provided in § 668.183(b).

(b) *Data manager.* (1) For FFELP loans held by a guaranty agency or lender, the guaranty agency is the data manager.

(2) For FFELP loans that we hold, we are the data manager.

(3) For Direct Loan Program loans, the Direct Loan Servicer, as defined in 34 CFR 685.102, is the data manager.

(c) *Days.* In this subpart, ''days'' means calendar days.

(d) *Default.* A borrower is considered to be in default for cohort default rate purposes under the rules in § 668.183(c).

(e) *Draft cohort default rate.* Your draft cohort default rate is a rate we issue, for your review, before we issue your official cohort default rate. A draft cohort default rate is used only for the purposes described in § 668.185.

(f) *Entering repayment.* (1) Except as provided in paragraphs (f)(2) and (f)(3) of this section, loans are considered to enter repayment on the dates described in 34 CFR 682.200 (under the definition of ''repayment period'') and in 34 CFR 685.207.

(2) A Federal SLS loan is considered to enter repayment—

(i) At the same time the borrower's Federal Stafford loan enters repayment, if the borrower received the Federal SLS loan and the Federal Stafford loan during the same period of continuous enrollment; or

(ii) In all other cases, on the day after the student ceases to be enrolled at an institution on at least a half-time basis in an educational program leading to a degree, certificate, or other recognized educational credential.

(3) For the purposes of this subpart, a loan is considered to enter repayment on the date that a borrower repays it in full, if the loan is paid in full before the loan enters repayment under paragraphs (f)(1) or (f)(2) of this section.

(g) *Fiscal year.* A fiscal year begins on October 1 and ends on the following September 30. A fiscal year is identified by the calendar year in which it ends.

(h) *Loan record detail report.* The loan record detail report is a report that we produce. It contains the data used to calculate your draft or official cohort default rate.

(i) *Official cohort default rate.* Your official cohort default rate is the cohort default rate that we publish for you under § 668.186. Cohort default rates calculated under this subpart are not related in any way to cohort default rates that are calculated for the Federal Perkins Loan Program.

(j) *We.* We are the Department, the Secretary, or the Secretary's designee.

(k) *You.* You are an institution.

(Approved by the Office of Management and Budget under control number 1845–0022)

(Authority: 20 U.S.C. 1082, 1085, 1094, 1099c)

§ 668.183 Calculating and applying cohort default rates.

(a) *General.* This section describes the four steps that we follow to calculate and apply your cohort default rate for a fiscal year:

(1) First, under paragraph (b) of this section, we identify the borrowers in your cohort for the fiscal year. If the total number of borrowers in that cohort is fewer than 30, we also identify the borrowers in your cohorts for the 2 most recent prior fiscal years.

(2) Second, under paragraph (c) of this section, we identify the borrowers in the cohort (or cohorts) who are considered to be in default. If more than one cohort will be used to calculate your cohort default rate, we identify defaulted borrowers separately for each cohort.

(3) Third, under paragraph (d) of this section, we calculate your cohort default rate.

(4) Fourth, we apply your cohort default rate to all of your locations—

(i) As you exist on the date you receive the notice of your official cohort default rate; and

(ii) From the date on which you receive the notice of your official cohort default rate until you receive our notice that the cohort default rate no longer applies.

(b) *Identify the borrowers in a cohort.* (1) Your cohort for a fiscal year consists of all of your current and former students who, during that fiscal year, entered repayment on any Federal Stafford loan, Federal SLS loan, Direct Subsidized loan, or Direct Unsubsidized loan that they received to attend your institution, or on the portion of a loan made under the Federal Consolidation Loan Program or the Federal Direct Consolidation Loan Program (as defined in 34 CFR 685.102) that is used to repay those loans.

(2) A borrower may be included in more than one of your cohorts and may be included in the cohorts of more than one institution in the same fiscal year.

(c) *Identify the borrowers in a cohort who are in default.* (1) Except as

provided in paragraph (c)(2) of this section, for the purposes of this subpart a borrower in a cohort for a fiscal year is considered to be in default if—

(i) Before the end of the following fiscal year, the borrower defaults on any FFELP loan that was used to include the borrower in the cohort or on any Federal Consolidation Loan Program loan that repaid a loan that was used to include the borrower in the cohort (however, a borrower is not considered to be in default unless a claim for insurance has been paid on the loan by a guaranty agency or by us);

(ii) Before the end of the following fiscal year, the borrower fails to make an installment payment, when due, on any Direct Loan Program loan that was used to include the borrower in the cohort or on any Federal Direct Consolidation Loan Program loan that repaid a loan that was used to include the borrower in the cohort, and the borrower's failure persists for 360 days (or for 270 days, if the borrower's first day of delinquency was before October 7, 1998);

(iii) You are a proprietary, non-degree-granting institution, and before the end of the following fiscal year, the borrower has been in repayment for 360 days, under the Direct Loan Program's income contingent repayment plan, on a loan used to include the borrower in your cohort (or that repaid a loan that was used to include the borrower in your cohort), with scheduled payments that are less than 15 dollars per month and are less than the amount of interest accruing on the loan; or

(iv) Before the end of the following fiscal year, you or your owner, agent, contractor, employee, or any other affiliated entity or individual make a payment to prevent a borrower's default on a loan that is used to include the borrower in that cohort.

(2) A borrower is not considered to be in default based on a loan that is, before the end of the fiscal year immediately following the fiscal year in which it entered repayment—

(i) Rehabilitated under 34 CFR 682.405 or 34 CFR 685.211(e); or

(ii) Repurchased by a lender because the claim for insurance was submitted or paid in error.

(d) *Calculate the cohort default rate.* Except as provided in § 668.184, if there are—

(1) Thirty or more borrowers in your cohort for a fiscal year, your cohort default rate is the percentage that is derived by dividing—

(i) The number of borrowers in the cohort who are in default, as determined under paragraph (c) of this section; by

(ii) The number of borrowers in the cohort, as determined under paragraph (b) of this section.

(2) Fewer than 30 borrowers in your cohort for a fiscal year, your cohort default rate is the percentage that is derived by dividing—

(i) The total number of borrowers in that cohort and in the two most recent prior cohorts who are in default, as determined for each cohort under paragraph (c) of this section; by

(ii) The total number of borrowers in that cohort and the two most recent prior cohorts, as determined for each cohort under paragraph (b) of this section.

(Approved by the Office of Management and Budget under control number 1845–0022)

(Authority: 20 U.S.C. 1082, 1085, 1094, 1099c)

§ 668.184 Determining cohort default rates for institutions that have undergone a change in status.

(a) *General.* (1) If you undergo a change in status identified in this section, your cohort default rate is determined under this section.

(2) In determining cohort default rates under this section, the date of a merger, acquisition, or other change in status is the date the change occurs.

(3) A change in status may affect your eligibility to participate in Title IV, HEA programs under § 668.187 or § 668.188.

(4) If another institution's cohort default rate is applicable to you under this section, you may challenge, request an adjustment, or submit an appeal for the cohort default rate under the same requirements that would be applicable to the other institution under §§ 668.185 and 668.189.

(b) *Acquisition or merger of institutions.* If your institution acquires, or was created by the merger of, one or more institutions that participated independently in the Title IV, HEA programs immediately before the acquisition or merger—

(1) For the cohort default rates published before the date of the acquisition or merger, your cohort default rates are the same as those of your predecessor that had the highest total number of borrowers entering repayment in the two most recent cohorts used to calculate those cohort default rates; and

(2) Beginning with the first cohort default rate published after the date of the acquisition or merger, your cohort default rates are determined by including the applicable borrowers from each institution involved in the acquisition or merger in the calculation under § 668.183.

(c) *Acquisition of branches or locations.* If you acquire a branch or a location from another institution participating in the Title IV, HEA programs—

(1) The cohort default rates published for you before the date of the change apply to you and to the newly acquired branch or location;

(2) Beginning with the first cohort default rate published after the date of the change, your cohort default rates for the next 3 fiscal years are determined by including the applicable borrowers from your institution and the other institution (including all of its locations) in the calculation under § 668.183;

(3) After the period described in paragraph (c)(2) of this section, your cohort default rates do not include borrowers from the other institution in the calculation under § 668.183; and

(4) At all times, the cohort default rate for the institution from which you acquired the branch or location is not affected by this change in status.

(d) *Branches or locations becoming institutions.* If you are a branch or location of an institution that is participating in the Title IV, HEA programs, and you become a separate, new institution for the purposes of participating in those programs—

(1) The cohort default rates published before the date of the change for your former parent institution are also applicable to you;

(2) Beginning with the first cohort default rate published after the date of the change, your cohort default rates for the next 3 fiscal years are determined by including the applicable borrowers from your institution and your former parent institution (including all of its locations) in the calculation under § 668.183; and

(3) After the period described in paragraph (d)(2) of this section, your cohort default rates do not include borrowers from your former parent institution in the calculation under § 668.183.

(Approved by the Office of Management and Budget under control number 1845–0022)

(Authority: 20 U.S.C. 1082, 1085, 1094, 1099c)

§ 668.185 Draft cohort default rates and your ability to challenge before official cohort default rates are issued.

(a) *General.* (1) We notify you of your draft cohort default rate before your official cohort default rate is calculated. Our notice includes the loan record detail report for the draft cohort default rate.

(2) Regardless of the number of borrowers included in your cohort, your

draft cohort default rate is always calculated using data for that fiscal year alone, using the method described in § 668.183(d)(1).

(3) Your draft cohort default rate and the loan record detail report are not considered public information and may not be otherwise voluntarily released by a data manager.

(4) Any challenge you submit under this section and any response provided by a data manager must be in a format acceptable to us. This acceptable format is described in the ''Cohort Default Rate Guide'' that we provide to you. If your challenge does not comply with the requirements in the ''Cohort Default Rate Guide,'' we may deny your challenge.

(b) *Incorrect data challenges.* (1) You may challenge the accuracy of the data included on the loan record detail report by sending a challenge to the relevant data manager, or data managers, within 45 days after you receive the data. Your challenge must include—

(i) A description of the information in the loan record detail report that you believe is incorrect; and

(ii) Documentation that supports your contention that the data are incorrect.

(2) Within 30 days after receiving your challenge, the data manager must send you and us a response that—

(i) Addresses each of your allegations of error; and

(ii) Includes the documentation that supports the data manager's position.

(3) If your data manager concludes that draft data in the loan record detail report are incorrect, and we agree, we use the corrected data to calculate your cohort default rate.

(4) If you fail to challenge the accuracy of data under this section, you cannot contest the accuracy of those data in an uncorrected data adjustment, under § 668.190, or in an erroneous data appeal, under § 668.192.

(c) *Participation rate index challenges.* (1)(i) You may challenge an anticipated loss of eligibility under § 668.187(a)(1), based on one cohort default rate over 40 percent, if your participation rate index for that cohort's fiscal year is equal to or less than 0.06015.

(ii) You may challenge an anticipated loss of eligibility under § 668.187(a)(2), based on three cohort default rates of 25 percent or greater, if your participation rate index is equal to or less than 0.0375 for any of those three cohorts' fiscal years.

(2) For a participation rate index challenge, your participation rate index is calculated as described in § 668.195(b), except that—

(i) The draft cohort default rate is considered to be your most recent cohort default rate; and

(ii) If the cohort used to calculate your draft cohort default rate included fewer than 30 borrowers, you may calculate your participation rate index for that fiscal year using either your most recent draft cohort default rate or the average rate that would be calculated for that fiscal year, using the method described in § 668.183(d)(2).

(3) You must send your participation rate index challenge, including all supporting documentation, to us within 45 days after you receive your draft cohort default rate.

(4) We notify you of our determination on your participation rate index challenge before your official cohort default rate is published.

(5) If we determine that you qualify for continued eligibility based on your participation rate index challenge, you will not lose eligibility under § 668.187 when your next official cohort default rate is published. A successful challenge that is based on your draft cohort default rate does not excuse you from any other loss of eligibility. However, if your successful challenge of a loss of eligibility under paragraph (c)(1)(ii) of this section is based on a prior, official cohort default rate, and not on your draft cohort default rate, we also excuse you from any subsequent loss of eligibility, under § 668.187(a)(2), that would be based on that official cohort default rate.

(Approved by the Office of Management and Budget under control number 1845–0022)

(Authority: 20 U.S.C. 1082, 1085, 1094, 1099c)

§ 668.186 Notice of your official cohort default rate.

(a) We notify you of your cohort default rate after we calculate it. After we send our notice to you, we publish a list of cohort default rates for all institutions.

(b) If your cohort default rate is 10 percent or more, we include a copy of the loan record detail report with the notice.

(c) If your cohort default rate is less than 10 percent—

(1) You may request a copy of any loan record detail report that lists loans included in your cohort default rate calculation; and

(2) If you are requesting an adjustment or appealing under this subpart, your request for a copy of the loan record detail report or reports must be sent to us within 15 days after you receive the notice of your cohort default rate.

(Approved by the Office of Management and Budget under control number 1845–0022)

(Authority: 20 U.S.C. 1082, 1085, 1094, 1099c)

§ 668.187 Consequences of cohort default rates on your ability to participate in Title IV, HEA programs.

(a) *End of participation.* (1) Except as provided in paragraph (f) of this section, you lose your eligibility to participate in the FFEL and Direct Loan programs 30 days after you receive our notice that your most recent cohort default rate is greater than 40 percent.

(2) Except as provided in paragraphs (e) and (f) of this section, you lose your eligibility to participate in the FFEL, Direct Loan, and Federal Pell Grant programs 30 days after you receive our notice that your three most recent cohort default rates are each 25 percent or greater.

(b) *Length of period of ineligibility.* Your loss of eligibility under this section continues—

(1) For the remainder of the fiscal year in which we notify you that you are subject to a loss of eligibility; and

(2) For the next 2 fiscal years.

(c) *Using a cohort default rate more than once.* The use of a cohort default rate as a basis for a loss of eligibility under this section does not preclude its use as a basis for—

(1) Any concurrent or subsequent loss of eligibility under this section; or

(2) Any other action by us.

(d) *Special institutions.* If you are a special institution that satisfies the requirements for continued eligibility under § 668.198, you are not subject to any loss of eligibility under this section or to provisional certification under § 668.16(m).

(e) *Continuing participation in Pell.* If you are subject to a loss of eligibility under paragraph (a)(2) of this section, based on three cohort default rates of 25 percent or greater, you may continue to participate in the Federal Pell Grant Program if we determine that you—

(1) Were ineligible to participate in the FFEL and Direct Loan programs before October 7, 1998, and your eligibility was not reinstated;

(2) Requested in writing, before October 7, 1998, to withdraw your participation in the FFEL and Direct Loan programs, and you were not later reinstated; or

(3) Have not certified an FFELP loan or originated a Direct Loan Program loan on or after July 7, 1998.

(f) *Requests for adjustments and appeals.* (1) A loss of eligibility under this section does not take effect while your request for adjustment or appeal,

as listed in § 668.189(a), is pending, provided your request for adjustment or appeal is complete, timely, accurate, and in the required format.

(2) Eligibility continued under paragraph (f)(1) of this section ends if we determine that none of the requests for adjustments and appeals you have submitted qualify you for continued eligibility under § 668.189. Loss of eligibility takes effect on the date that you receive notice of our determination on your last pending request for adjustment or appeal.

(3) You do not lose eligibility under this section if we determine that your request for adjustment or appeal meets all requirements of this subpart and qualifies you for continued eligibility under § 668.189.

(4) To avoid liabilities you might otherwise incur under paragraph (g) of this section, you may choose to suspend your participation in the FFEL and Direct Loan programs during the adjustment or appeal process.

(g) *Liabilities during the adjustment or appeal process.* If you continued to participate in the FFEL or Direct Loan Program under paragraph (f)(1) of this section, and we determine that none of your requests for adjustments or appeals qualify you for continued eligibility—

(1) For any FFEL or Direct Loan Program loan that you certified and delivered or originated and disbursed more than 30 days after you received the notice of your cohort default rate, we estimate the amount of interest, special allowance, reinsurance, and any related or similar payments we make or are obligated to make on those loans;

(2) We exclude from this estimate any amount attributable to funds that you delivered or disbursed more than 45 days after you submitted your completed appeal to us;

(3) We notify you of the estimated amount; and

(4) Within 45 days after you receive our notice of the estimated amount, you must pay us that amount, unless—

(i) You file an appeal under the procedures established in subpart H of this part (for the purposes of subpart H of this part, our notice of the estimate is considered to be a final program review determination); or

(ii) We permit a longer repayment period.

(h) *Regaining eligibility.* If you lose your eligibility to participate in a program under this section, you may not participate in that program until—

(1) The period described in paragraph (b) of this section has ended;

(2) You pay any amount owed to us under this section or are meeting that obligation under an agreement acceptable to us;

(3) You submit a new application for participation in the program;

(4) We determine that you meet all of the participation requirements in effect at the time of your application; and

(5) You and we enter into a new program participation agreement.

(Approved by the Office of Management and Budget under control number 1845–0022)

(Authority: 20 U.S.C. 1082, 1085, 1094, 1099c)

§ 668.188 Preventing evasion of the consequences of cohort default rates.

(a) *General.* Unless you are a special institution complying with § 668.198, you are subject to a loss of eligibility that has already been imposed against another institution under § 668.187 if—

(1) You and the ineligible institution are both parties to a transaction that results in a change of ownership, a change in control, a merger, a consolidation, an acquisition, a change of name, a change of address, any change that results in a location becoming a freestanding institution, a purchase or sale, a transfer of assets, an assignment, a change of identification number, a contract for services, an addition or closure of one or more locations or branches or educational programs, or any other change in whole or in part in institutional structure or identity;

(2) Following the change described in paragraph (a)(1) of this section, you offer an educational program at substantially the same address at which the ineligible institution had offered an educational program before the change; and

(3) There is a commonality of ownership or management between you and the ineligible institution, as the ineligible institution existed before the change.

(b) *Commonality of ownership or management.* For the purposes of this section, a commonality of ownership or management exists if, at each institution, the same person (as defined in 34 CFR 600.31) or members of that person's family, directly or indirectly—

(1) Holds or held a managerial role; or

(2) Has or had the ability to affect substantially the institution's actions, within the meaning of 34 CFR 600.21.

(c) *Teach-outs.* Notwithstanding paragraph (b)(1) of this section, a commonality of management does not exist if you are conducting a teach-out under a teach-out agreement as defined in 34 CFR 602.3 and administered in accordance with 34 CFR 602.24(c), and—

(1)(i) Within 60 days after the change described in this section, you send us the names of the managers for each facility undergoing the teach-out as it existed before the change and for each facility as it exists after you believe that the commonality of management has ended; and

(ii) We determine that the commonality of management, as described in paragraph (b)(1) of this section, has ended; or

(2)(i) Within 30 days after you receive our notice that we have denied your submission under paragraph (c)(1)(i) of this section, you make the management changes we request and send us a list of the names of the managers for each facility undergoing the teach-out as it exists after you make those changes; and

(ii) We determine that the commonality of management, as described in paragraph (b)(1) of this section, has ended.

(d) *Initial determination.* We encourage you to contact us before undergoing a change described in this section. If you write to us, providing the information we request, we will provide a written initial determination of the anticipated change's effect on your eligibility.

(e) *Notice of accountability.* (1) We notify you in writing if, in response to your notice or application filed under 34 CFR 600.20 or 600.21, we determine that you are subject to a loss of eligibility, under paragraph (a) of this section, that has been imposed against another institution.

(2) Our notice also advises you of the scope and duration of your loss of eligibility. The loss of eligibility applies to all of your locations from the date you receive our notice until the expiration of the period of ineligibility applicable to the other institution.

(3) If you are subject to a loss of eligibility under this section that has already been imposed against another institution, you may only request an adjustment or submit an appeal for the loss of eligibility under the same requirements that would be applicable to the other institution under § 668.189.

(Approved by the Office of Management and Budget under control number 1845–0022)

(Authority: 20 U.S.C. 1082, 1085, 1094, 1099c)

§ 668.189 General requirements for adjusting official cohort default rates and for appealing their consequences.

(a) *Remaining eligible.* You do not lose eligibility under § 668.187 if—

(1) We recalculate your cohort default rate, and it is below the percentage

threshold for the loss of eligibility as the result of—

(i) An uncorrected data adjustment submitted under this section and § 668.190;

(ii) A new data adjustment submitted under this section and § 668.191;

(iii) An erroneous data appeal submitted under this section and § 668.192; or

(iv) A loan servicing appeal submitted under this section and § 668.193; or

(2) You meet the requirements for—

(i) An economically disadvantaged appeal submitted under this section and § 668.194;

(ii) A participation rate index appeal submitted under this section and § 668.195;

(iii) An average rates appeal submitted under this section and § 668.196; or

(iv) A thirty-or-fewer borrowers appeal submitted under this section and § 668.197.

(b) *Limitations on your ability to dispute your cohort default rate.* (1) You may not dispute the calculation of a cohort default rate except as described in this subpart.

(2) You may not request an adjustment or appeal a cohort default rate, under § 668.190, § 668.191, § 668.192, or § 668.193, more than once.

(3) You may not request an adjustment or appeal a cohort default rate, under § 668.190, § 668.191, § 668.192, or § 668.193, if you previously lost your eligibility to participate in a Title IV, HEA program, under § 668.187, based entirely or partially on that cohort default rate.

(c) *Content and format of requests for adjustments and appeals.* We may deny your request for adjustment or appeal if it does not meet the following requirements:

(1) All appeals, notices, requests, independent auditor's opinions, management's written assertions, and other correspondence that you are required to send under this subpart must be complete, timely, accurate, and in a format acceptable to us. This acceptable format is described in the ''Cohort Default Rate Guide'' that we provide to you.

(2) Your completed request for adjustment or appeal must include—

(i) All of the information necessary to substantiate your request for adjustment or appeal; and

(ii) A certification by your chief executive officer, under penalty of perjury, that all the information you provide is true and correct.

(d) *Our copies of your correspondence.* Whenever you are required by this subpart to correspond with a party other than us, you must send us a copy of your correspondence within the same time deadlines. However, you are not required to send us copies of documents that you received from us originally.

(e) *Requirements for data managers' responses.* (1) Except as otherwise provided in this subpart, if this subpart requires a data manager to correspond with any party other than us, the data manager must send us a copy of the correspondence within the same time deadlines.

(2) If a data manager sends us correspondence under this subpart that is not in a format acceptable to us, we may require the data manager to revise that correspondence's format, and we may prescribe a format for that data manager's subsequent correspondence with us.

(f) *Our decision on your request for adjustment or appeal.* (1) We determine whether your request for an adjustment or appeal is in compliance with this subpart.

(2) In making our decision for an adjustment, under § 668.190 or § 668.191, or an appeal, under § 668.192 or § 668.193—

(i) We presume that the information provided to you by a data manager is correct unless you provide substantial evidence that shows the information is not correct; and

(ii) If we determine that a data manager did not provide the necessary clarifying information or legible records in meeting the requirements of this subpart, we presume that the evidence that you provide to us is correct unless it is contradicted or otherwise proven to be incorrect by information we maintain.

(3) Our decision is based on the materials you submit under this subpart. We do not provide an oral hearing.

(4) We notify you of our decision—

(i) If you request an adjustment or appeal because you are subject to a loss of eligibility under § 668.187, within 45 days after we receive your completed request for an adjustment or appeal; or

(ii) In all other cases, except for appeals submitted under § 668.192(a) to avoid provisional certification, before we notify you of your next official cohort default rate.

(5) You may not seek judicial review of our determination of a cohort default rate until we issue our decision on all pending requests for adjustments or appeals for that cohort default rate.

(Approved by the Office of Management and Budget under control number 1845–0022)

(Authority: 20 U.S.C. 1082, 1085, 1094, 1099c)

§ 668.190 Uncorrected data adjustments.

(a) *Eligibility.* You may request an uncorrected data adjustment for your most recent cohort of borrowers, used to calculate your most recent official cohort default rate, if in response to your challenge under § 668.185(b), a data manager agreed correctly to change the data, but the changes are not reflected in your official cohort default rate.

(b) *Deadlines for requesting an uncorrected data adjustment.* (1) If the loan record detail report was not included with your official cohort default rate notice, you must request it within 15 days after you receive the notice of your official cohort default rate.

(2) You must send us a request for an uncorrected data adjustment, including all supporting documentation, within 30 days after you receive your loan record detail report from us.

(c) *Determination.* We recalculate your cohort default rate, based on the corrected data, if we determine that—

(1) In response to your challenge under § 668.185(b), a data manager agreed to change the data;

(2) The changes described in paragraph (c)(1) of this section are not reflected in your official cohort default rate; and

(3) We agree that the data are incorrect.

(Approved by the Office of Management and Budget under control number 1845–0022)

(Authority: 20 U.S.C. 1082, 1085, 1094, 1099c)

§ 668.191 New data adjustments.

(a) *Eligibility.* You may request a new data adjustment for your most recent cohort of borrowers, used to calculate your most recent official cohort default rate, if—

(1) A comparison of the loan record detail reports that we provide to you for the draft and official cohort default rates shows that the data have been newly included, excluded, or otherwise changed; and

(2) You identify errors in the data described in paragraph (a)(1) of this section that are confirmed by the data manager.

(b) *Deadlines for requesting a new data adjustment.* (1) If the loan record detail report was not included with your official cohort default rate notice, you must request it within 15 days after you receive the notice of your official cohort default rate.

(2) You must send the relevant data manager, or data managers, and us a request for a new data adjustment,

including all supporting documentation, within 15 days after you receive your loan record detail report from us.

(3) Within 20 days after receiving your request for a new data adjustment, the data manager must send you and us a response that—

(i) Addresses each of your allegations of error; and

(ii) Includes the documentation used to support the data manager's position.

(4) Within 15 days after receiving a guaranty agency's notice that we hold an FFELP loan about which you are inquiring, you must send us your request for a new data adjustment for that loan. We respond to your request under paragraph (b)(3) of this section.

(5) Within 15 days after receiving incomplete or illegible records or data from a data manager, you must send a request for replacement records or clarification of data to the data manager and us.

(6) Within 20 days after receiving your request for replacement records or clarification of data, the data manager must—

(i) Replace the missing or illegible records;

(ii) Provide clarifying information; or

(iii) Notify you and us that no clarifying information or additional or improved records are available.

(7) You must send us your completed request for a new data adjustment, including all supporting documentation—

(i) Within 30 days after you receive the final data manager's response to your request or requests; or

(ii) If you are also filing an erroneous data appeal or a loan servicing appeal, by the latest of the filing dates required in paragraph (b)(7)(i) of this section or in § 668.192(b)(6)(i) or § 668.193(c)(10)(i).

(c) *Determination.* If we determine that incorrect data were used to calculate your cohort default rate, we recalculate your cohort default rate based on the correct data.

(Approved by the Office of Management and Budget under control number 1845–0022)

(Authority: 20 U.S.C. 1082, 1085, 1094, 1099c)

§ 668.192 Erroneous data appeals.

(a) *Eligibility.* Except as provided in § 668.189(b), you may appeal the calculation of a cohort default rate upon which a loss of eligibility, under § 668.187, or provisional certification, under § 668.16(m), is based if—

(1) You dispute the accuracy of data that you previously challenged on the basis of incorrect data, under § 668.185(b); or

(2) A comparison of the loan record detail reports that we provide to you for the draft and official cohort default rates shows that the data have been newly included, excluded, or otherwise changed, and you dispute the accuracy of that data.

(b) *Deadlines for submitting an appeal.* (1) You must send a request for verification of data errors to the relevant data manager, or data managers, and to us within 15 days after you receive the notice of your loss of eligibility or provisional certification. Your request must include a description of the information in the cohort default rate data that you believe is incorrect and all supporting documentation that demonstrates the error.

(2) Within 20 days after receiving your request for verification of data errors, the data manager must send you and us a response that—

(i) Addresses each of your allegations of error; and

(ii) Includes the documentation used to support the data manager's position.

(3) Within 15 days after receiving a guaranty agency's notice that we hold an FFELP loan about which you are inquiring, you must send us your request for verification of that loan's data errors. Your request must include a description of the information in the cohort default rate data that you believe is incorrect and all supporting documentation that demonstrates the error. We respond to your request under paragraph (b)(2) of this section.

(4) Within 15 days after receiving incomplete or illegible records or data, you must send a request for replacement records or clarification of data to the data manager and us.

(5) Within 20 days after receiving your request for replacement records or clarification of data, the data manager must—

(i) Replace the missing or illegible records;

(ii) Provide clarifying information; or

(iii) Notify you and us that no clarifying information or additional or improved records are available.

(6) You must send your completed appeal to us, including all supporting documentation—

(i) Within 30 days after you receive the final data manager's response to your request; or

(ii) If you are also requesting a new data adjustment or filing a loan servicing appeal, by the latest of the filing dates required in paragraph (b)(6)(i) of this section or in § 668.191(b)(7)(i) or § 668.193(c)(10)(i).

(c) *Determination.* If we determine that incorrect data were used to calculate your cohort default rate, we recalculate your cohort default rate based on the correct data.

(Approved by the Office of Management and Budget under control number 1845–0022)

(Authority: 20 U.S.C. 1082, 1085, 1094, 1099c)

§ 668.193 Loan servicing appeals.

(a) *Eligibility.* Except as provided in § 668.189(b), you may appeal, on the basis of improper loan servicing or collection, the calculation of—

(1) Your most recent cohort default rate; or

(2) Any cohort default rate upon which a loss of eligibility under § 668.187 is based.

(b) *Improper loan servicing.* For the purposes of this section, a default is considered to have been due to improper loan servicing or collection only if the borrower did not make a payment on the loan and you prove that the FFEL Program lender or the Direct Loan Servicer, as defined in 34 CFR 685.102, failed to perform one or more of the following activities, if that activity applies to the loan:

(1) Send at least one letter (other than the final demand letter) urging the borrower to make payments on the loan;

(2) Attempt at least one phone call to the borrower;

(3) Send a final demand letter to the borrower;

(4) For a Direct Loan Program loan only, document that skip tracing was performed if the Direct Loan Servicer determined that it did not have the borrower's current address; and

(5) For an FFELP loan only—

(i) Submit a request for preclaims or default aversion assistance to the guaranty agency; and

(ii) Submit a certification or other documentation that skip tracing was performed to the guaranty agency.

(c) *Deadlines for submitting an appeal.* (1) If the loan record detail report was not included with your official cohort default rate notice, you must request it within 15 days after you receive the notice of your official cohort default rate.

(2) You must send a request for loan servicing records to the relevant data manager, or data managers, and to us within 15 days after you receive your loan record detail report from us. If the data manager is a guaranty agency, your request must include a copy of the loan record detail report.

(3) Within 20 days after receiving your request for loan servicing records, the data manager must—

(i) Send you and us a list of the borrowers in your representative

sample, as described in paragraph (d) of this section (the list must be in social security number order, and it must include the number of defaulted loans included in the cohort for each listed borrower);

(ii) Send you and us a description of how your representative sample was chosen; and

(iii) Either send you copies of the loan servicing records for the borrowers in your representative sample and send us a copy of its cover letter indicating that the records were sent, or send you and us a notice of the amount of its fee for providing copies of the loan servicing records.

(4) The data manager may charge you a reasonable fee for providing copies of loan servicing records, but it may not charge more than $10 per borrower file. If a data manager charges a fee, it is not required to send the documents to you until it receives your payment of the fee.

(5) If the data manager charges a fee for providing copies of loan servicing records, you must send payment in full to the data manager within 15 days after you receive the notice of the fee.

(6) If the data manager charges a fee for providing copies of loan servicing records, and—

(i) You pay the fee in full and on time, the data manager must send you, within 20 days after it receives your payment, a copy of all loan servicing records for each loan in your representative sample (the copies are provided to you in hard copy format unless the data manager and you agree that another format may be used), and it must send us a copy of its cover letter indicating that the records were sent; or

(ii) You do not pay the fee in full and on time, the data manager must notify you and us of your failure to pay the fee and that you have waived your right to challenge the calculation of your cohort default rate based on the data manager's records. We accept that determination unless you prove that it is incorrect.

(7) Within 15 days after receiving a guaranty agency's notice that we hold an FFELP loan about which you are inquiring, you must send us your request for the loan servicing records for that loan. We respond to your request under paragraph (c)(3) of this section.

(8) Within 15 days after receiving incomplete or illegible records, you must send a request for replacement records to the data manager and us.

(9) Within 20 days after receiving your request for replacement records, the data manager must either—

(i) Replace the missing or illegible records; or

(ii) Notify you and us that no additional or improved copies are available.

(10) You must send your appeal to us, including all supporting documentation—

(i) Within 30 days after you receive the final data manager's response to your request for loan servicing records; or

(ii) If you are also requesting a new data adjustment or filing an erroneous data appeal, by the latest of the filing dates required in paragraph (c)(10)(i) of this section or in § 668.191(b)(7)(i) or § 668.192(b)(6)(i).

(d) *Representative sample of records.* (1) To select a representative sample of records, the data manager first identifies all of the borrowers for whom it is responsible and who had loans that were considered to be in default in the calculation of the cohort default rate you are appealing. However, for the purposes of this paragraph, the data manager does not identify a borrower as defaulted due to repayment under the Direct Loan Program's income contingent repayment plan, under § 668.183(c)(1)(iii).

(2) From the group of borrowers identified under paragraph (d)(1) of this section, the data manager identifies a sample that is large enough to derive an estimate, acceptable at a 95 percent confidence level with a plus or minus 5 percent confidence interval, for use in determining the number of borrowers who should be excluded from the calculation of the cohort default rate due to improper loan servicing or collection.

(e) *Loan servicing records.* Loan servicing records are the collection and payment history records—

(1) Provided to the guaranty agency by the lender and used by the guaranty agency in determining whether to pay a claim on a defaulted loan; or

(2) Maintained by our Direct Loan Servicer that are used in determining your cohort default rate.

(f) *Determination.* (1) We determine the number of loans, included in your representative sample of loan servicing records, that defaulted due to improper loan servicing or collection, as described in paragraph (b) of this section.

(2) Based on our determination, we use a statistically valid methodology to exclude the corresponding percentage of borrowers from both the numerator and denominator of the calculation of your cohort default rate.

(3) Our recalculation of your cohort default rate does not affect the number of borrowers who are considered to be in default due to payments made under the Direct Loan Program's income contingent repayment plan, under the criteria in § 668.183(c)(1)(iii).

(Approved by the Office of Management and Budget under control number 1845–0022)

(Authority: 20 U.S.C. 1082, 1085, 1094, 1099c)

§ 668.194 Economically disadvantaged appeals.

(a) *Eligibility.* As described in this section, you may appeal a notice of a loss of eligibility under § 668.187 if an independent auditor's opinion certifies that your low income rate is two-thirds or more and—

(1) You offer an associate, baccalaureate, graduate, or professional degree, and your completion rate is 70 percent or more; or

(2) You do not offer an associate, baccalaureate, graduate, or professional degree, and your placement rate is 44 percent or more.

(b) *Low income rate.* (1) Your low income rate is the percentage of your students, as described in paragraph (b)(2) of this section, who—

(i) For an award year that overlaps the 12-month period selected under paragraph (b)(2) of this section, have an expected family contribution, as defined in 34 CFR 690.2, that is equal to or less than the largest expected family contribution that would allow a student to receive one-half of the maximum Federal Pell Grant award, regardless of the student's enrollment status or cost of attendance; or

(ii) For a calendar year that overlaps the 12-month period selected under paragraph (b)(2) of this section, have an adjusted gross income that, when added to the adjusted gross income of the student's parents (if the student is a dependent student) or spouse (if the student is a married independent student), is less than the amount listed in the Department of Health and Human Services poverty guidelines for the size of the student's family unit.

(2) The students who are used to determine your low income rate include only students who were enrolled on at least a half-time basis in an eligible program at your institution during any part of a 12-month period that ended during the 6 months immediately preceding the cohort's fiscal year.

(c) *Completion rate.* (1) Your completion rate is the percentage of your students, as described in paragraph (c)(2) of this section, who—

(i) Completed the educational programs in which they were enrolled;

(ii) Transferred from your institution to a higher level educational program;

(iii) Remained enrolled and are making satisfactory progress toward completion of their educational programs at the end of the same 12-month period used to calculate the low income rate; or

(iv) Entered active duty in the Armed Forces of the United States within 1 year after their last date of attendance at your institution.

(2) The students who are used to determine your completion rate include only regular students who were—

(i) Initially enrolled on a full-time basis in an eligible program; and

(ii) Originally scheduled to complete their programs during the same 12-month period used to calculate the low income rate.

(d) *Placement rate.* (1) Except as provided in paragraph (d)(2) of this section, your placement rate is the percentage of your students, as described in paragraphs (d)(3) and (d)(4) of this section, who—

(i) Are employed, in an occupation for which you provided training, on the date following 1 year after their last date of attendance at your institution;

(ii) Were employed for at least 13 weeks, in an occupation for which you provided training, between the date they enrolled at your institution and the first date that is more than a year after their last date of attendance at your institution; or

(iii) Entered active duty in the Armed Forces of the United States within 1 year after their last date of attendance at your institution.

(2) For the purposes of this section, a former student is not considered to have been employed based on any employment by your institution.

(3) The students who are used to determine your placement rate include only former students who—

(i) Were initially enrolled in an eligible program on at least a half-time basis;

(ii) Were originally scheduled, at the time of enrollment, to complete their educational programs during the same 12-month period used to calculate the low income rate; and

(iii) Remained in the program beyond the point at which a student would have received a 100 percent tuition refund from you.

(4) A student is not included in the calculation of your placement rate if that student, on the date that is 1 year after the student's originally scheduled completion date, remains enrolled in the same program and is making satisfactory progress.

(e) *Scheduled to complete.* In calculating a completion or placement rate under this section, the date on which a student is originally scheduled to complete a program is based on—

(1) For a student who is initially enrolled full-time, the amount of time specified in your enrollment contract, catalog, or other materials for completion of the program by a full-time student; or

(2) For a student who is initially enrolled less than full-time, the amount of time that it would take the student to complete the program if the student remained at that level of enrollment throughout the program.

(f) *Deadline for submitting an appeal.* (1) Within 30 days after you receive the notice of your loss of eligibility, you must send us your management's written assertion, as described in the Cohort Default Rate Guide.

(2) Within 60 days after you receive the notice of your loss of eligibility, you must send us the independent auditor's opinion described in paragraph (g) of this section.

(g) *Independent auditor's opinion.* (1) The independent auditor's opinion must state whether your management's written assertion, as you provided it to the auditor and to us, meets the requirements for an economically disadvantaged appeal and is fairly stated in all material respects.

(2) The engagement that forms the basis of the independent auditor's opinion must be an examination-level compliance attestation engagement performed in accordance with—

(i) The American Institute of Certified Public Accountant's (AICPA) Statement on Standards for Attestation Engagements, Compliance Attestation (AICPA, Professional Standards, vol. 1, AT sec. 500), as amended (these standards may be obtained by calling the AICPA's order department, at 1–888–777–7077); and

(ii) Government Auditing Standards issued by the Comptroller General of the United States.

(h) *Determination.* You do not lose eligibility under § 668.187 if—

(1) Your independent auditor's opinion agrees that you meet the requirements for an economically disadvantaged appeal; and

(2) We determine that the independent auditor's opinion and your management's written assertion—

(i) Meet the requirements for an economically disadvantaged appeal; and

(ii) Are not contradicted or otherwise proven to be incorrect by information we maintain, to an extent that would render the independent auditor's opinion unacceptable.

(Approved by the Office of Management and Budget under control number 1845–0022)

(Authority: 20 U.S.C. 1082, 1085, 1094, 1099c)

§ 668.195 Participation rate index appeals.

(a) *Eligibility.* (1) You may appeal a notice of a loss of eligibility under § 668.187(a)(1), based on one cohort default rate over 40 percent, if your participation rate index for that cohort's fiscal year is equal to or less than 0.06015.

(2) You may appeal a notice of a loss of eligibility under § 668.187(a)(2), based on three cohort default rates of 25 percent or greater, if your participation rate index is equal to or less than 0.0375 for any of those three cohorts' fiscal years.

(b) *Calculating your participation rate index.* (1) Except as provided in paragraph (b)(2) of this section, your participation rate index for a fiscal year is determined by multiplying your cohort default rate for that fiscal year by the percentage that is derived by dividing—

(i) The number of students who received an FFELP or a Direct Loan Program loan to attend your institution during a period of enrollment, as defined in 34 CFR 682.200 or 685.102, that overlaps any part of a 12-month period that ended during the 6 months immediately preceding the cohort's fiscal year, by

(ii) The number of regular students who were enrolled at your institution on at least a half-time basis during any part of the same 12-month period.

(2) If your cohort default rate for a fiscal year is calculated as an average rate under § 668.183(d)(2), you may calculate your participation rate index for that fiscal year using either that average rate or the cohort default rate that would be calculated for the fiscal year alone using the method described in § 668.183(d)(1).

(c) *Deadline for submitting an appeal.* You must send us your appeal under this section, including all supporting documentation, within 30 days after you receive the notice of your loss of eligibility.

(d) *Determination.* (1) You do not lose eligibility under § 668.187 if we determine that you meet the requirements for a participation rate index appeal.

(2) If we determine that your participation rate index for a fiscal year is equal to or less than 0.0375, under paragraph (d)(1) of this section, we also excuse you from any subsequent loss of eligibility under § 668.187(a)(2) that would be based on the official cohort default rate for that fiscal year.

(Approved by the Office of Management and Budget under control number 1845–0022)

(Authority: 20 U.S.C. 1082, 1085, 1094, 1099c)

§ 668.196 Average rates appeals.

(a) *Eligibility.* (1) You may appeal a notice of a loss of eligibility under § 668.187(a)(1), based on one cohort default rate over 40 percent, if that cohort default rate is calculated as an average rate under § 668.183(d)(2).

(2) You may appeal a notice of a loss of eligibility under § 668.187(a)(2), based on three cohort default rates of 25 percent or greater, if at least two of those cohort default rates—

(i) Are calculated as average rates under § 668.183(d)(2); and

(ii) Would be less than 25 percent if calculated for the fiscal year alone using the method described in § 668.183(d)(1).

(b) *Deadline for submitting an appeal.* (1) Before notifying you of your official cohort default rate, we make an initial determination about whether you qualify for an average rates appeal. If we determine that you qualify, we notify you of that determination at the same time that we notify you of your official cohort default rate.

(2) If you disagree with our initial determination, you must send us your average rates appeal, including all supporting documentation, within 30 days after you receive the notice of your loss of eligibility.

(c) *Determination.* You do not lose eligibility under § 668.187 if we determine that you meet the requirements for an average rates appeal.

(Approved by the Office of Management and Budget under control number 1845–0022)

(Authority: 20 U.S.C. 1082, 1085, 1094, 1099c)

§ 668.197 Thirty-or-fewer borrowers appeals.

(a) *Eligibility.* You may appeal a notice of a loss of eligibility under § 668.187 if 30 or fewer borrowers, in total, are included in the 3 most recent cohorts of borrowers used to calculate your cohort default rates.

(b) *Deadline for submitting an appeal.* (1) Before notifying you of your official cohort default rate, we make an initial determination about whether you qualify for a thirty-or-fewer borrowers appeal. If we determine that you qualify, we notify you of that determination at the same time that we notify you of your official cohort default rate.

(2) If you disagree with our initial determination, you must send us your thirty-or-fewer borrowers appeal, including all supporting documentation, within 30 days after you receive the notice of your loss of eligibility.

(c) *Determination.* You do not lose eligibility under § 668.187 if we determine that you meet the requirements for a thirty-or-fewer borrowers appeal.

(Approved by the Office of Management and Budget under control number 1845–0022)

(Authority: 20 U.S.C. 1082, 1085, 1094, 1099c)

§ 668.198 Relief from the consequences of cohort default rates for special institutions.

(a) *Eligibility.* You are only eligible for relief from the consequences of cohort default rates under this section if you are a—

(1) Historically black college or university as defined in section 322(2) of the HEA;

(2) Tribally controlled community college as defined in section 2(a)(4) of the Tribally Controlled Community College Assistance Act of 1978; or

(3) Navajo community college under the Navajo Community College Act.

(b) *Applicability of requirements.* We may determine that the loss of eligibility provisions in § 668.187 and the prohibition against full certification in § 668.16(m) do not apply to you for each 1-year period beginning on July 1 of 1999, 2000, or 2001, if you meet the requirements in paragraph (a) of this section and you send us—

(1) By July 1 of the first 1-year period that begins after you receive our notice of a loss of eligibility under § 668.187—

(i) A default management plan; and

(ii) A certification that you have engaged an independent third party, as described in this section; and

(2) By July 1 of each subsequent 1-year period—

(i) Evidence that you have implemented your default management plan during the preceding 1-year period;

(ii) Evidence that you have made substantial improvement in the preceding 1-year period in your cohort default rate; and

(iii) A certification that you continue to engage an independent third party, as described in this section.

(c) *Default management plan.* (1) Your default management plan must provide reasonable assurance that you will, no later than July 1, 2002, have a cohort default rate that is less than 25 percent. Measures that you must take to provide this assurance include but are not limited to—

(i) Establishing a default management team by engaging your chief executive officer and relevant senior executive officials and enlisting the support of representatives from offices other than the financial aid office;

(ii) Identifying and allocating the personnel, administrative, and financial resources appropriate to implement the default management plan;

(iii) Defining the roles and responsibilities of the independent third party;

(iv) Defining evaluation methods and establishing a data collection system for measuring and verifying relevant default management statistics, including a statistical analysis of the borrowers who default on their loans;

(v) Establishing annual targets for reductions in your cohort default rate; and

(vi) Establishing a process to ensure the accuracy of your cohort default rate.

(2) We will determine whether your default management plan is acceptable, after considering your history, resources, dollars in default, and targets for default reduction in making this determination.

(3) If we determine that your proposed default management plan is unacceptable, you must consult with us to develop a revised plan and submit the revised plan to us within 30 days after you receive our notice that your proposed plan is unacceptable.

(4) If we determine, based on the evidence you submit under paragraph (b)(2) of this section, that your default management plan is no longer acceptable, you must develop a revised plan in consultation with us and submit the revised plan to us within 60 days after you receive our notice that your plan is no longer acceptable.

(5) A sample default management plan is provided in appendix B to this subpart. The sample is included to illustrate components of an acceptable default management plan. Since institutions' family income profiles, student borrowing patterns, histories, resources, dollars in default, and targets for default reduction are different, you must consider your own, individual circumstances in developing and submitting your plan.

(d) *Independent third party.* (1) An independent third party may be any individual or entity that—

(i) Provides technical assistance in developing and implementing your default management plan; and

(ii) Is not substantially controlled by a person who also exercises substantial control over your institution.

(2) An independent third party need not be paid by you for its services.

(3) The services of a lender, guaranty agency, or secondary market as an independent third party under this

section are not considered to be inducements under 34 CFR 682.200 or 682.401(e).

(e) *Substantial improvement.* (1) For the purposes of this section, your substantial improvement is determined based on—

(i) A reduction in your most recent draft or official cohort default rate;

(ii) An increase in the percentage of delinquent borrowers who avoid default by using deferments, forbearances, and job placement assistance;

(iii) An increase in the academic persistence of student borrowers;

(iv) An increase in the percentage of students pursuing graduate or professional study;

(v) An increase in the percentage of borrowers for whom a current address is known;

(vi) An increase in the percentage of delinquent borrowers that you contacted;

(vii) The implementation of alternative financial aid award policies and development of financial resources that reduce the need for student borrowing; or (viii) An increase in the percentage of accurate and timely enrollment status changes that you submitted to the National Student Loan Data System (NSLDS) on the Student Status Confirmation Report (SSCR).

(2) When making a determination of your substantial improvement, we consider your performance in light of—

(i) Your history, resources, dollars in default, and targets for default reduction;

(ii) Your level of effort in meeting the terms of your approved default management plan during the previous 1-year period; and

(iii) Any other mitigating circumstance at your institution during the 1-year period.

(f) *Determination.* (1) If we determine that you are in compliance with this section, the provisions of §§ 668.187 and 668.16(m) do not apply to you for that 1-year period, beginning on July 1 of 1999, 2000, or 2001.

(2) If we determine that you are not in compliance with this section, you are subject to the provisions of §§ 668.187 and 668.16(m). You lose your eligibility to participate in the FFEL, Direct Loan, and Federal Pell Grant programs on the date you receive our notice of the determination.

(Approved by the Office of Management and Budget under control number 1845–0022)

(Authority: 20 U.S.C. 1082, 1085, 1094, 1099c)

Appendix A to Subpart M of Part 668—Summaries of Eligibility and Submission Requirements for Challenges, Adjustments, and Appeals

I. Summary of Submission Eligibility

Some types of appeals may be submitted only if you are subject to a loss of eligibility under § 668.187 or to provisional certification under § 668.16(m). These types of appeals are identified in the following table. Submission deadlines are described in the paragraphs and sections that are cited in the table. For example, although you may submit an uncorrected data adjustment, new data adjustment, or loan servicing appeal if you are subject to provisional certification, the deadlines for those submissions are based on the date you receive your cohort default rate, not the date you receive the notice of your provisional certification.

BILLING CODE 4000–01–P

	May you submit this type of challenge, adjustment, or appeal...	... if you are subject to... No sanction?	Loss of eligibility?	Provisional certification?
Draft Cohort Default Rate	Incorrect Data Challenges *(§668.185(b))*	Yes	*Sanctions are never based on draft cohort default rates.*	
	Participation Rate Index Challenges *(§668.185(c))*	Yes		
Official Cohort Default Rate	Uncorrected Data Adjustments *(§668.190)*	Yes	Yes	Yes
	New Data Adjustments *(§668.191)*	Yes	Yes	Yes
	Erroneous Data Appeals *(§668.192)*	No	Yes	Yes
	Loan Servicing Appeals *(§668.193)*	Yes	Yes	Yes
	Economically Disadvantaged Appeals *(§668.194)*	No	Yes	No
	Participation Rate Index Appeals *(§668.195)*	No	Yes	No
	Average Rates Appeals *(§668.196)*	No	Yes	No
	Thirty-or-Fewer Borrowers Appeals *(§668.197)*	No	Yes	No

BILLING CODE 4000–01–C

II. Summary of Submission Deadlines

1. *General.* The deadlines you must meet when submitting a challenge, a request for adjustment, or an appeal are summarized in the following table. The full, official requirements for these deadlines are in § 668.189 and in the sections and paragraphs cited in the table.

2. *Timeframes.* The timeframes provided in the table (''30 Days'', ''15 Days'', etc.) identify the number of calendar days within which that action must be performed. Timeframes begin on the date that the previous action (connected to that timeframe with an arrowed line) is completed:

(i) For *your first action* (and for both actions, during an economically disadvantaged appeal), the timeframe begins on the date that you receive your draft cohort default rate, official cohort default rate, notice of loss of eligibility, or notice of provisional certification.

(ii) For *all other actions,* the timeframe begins on the date you receive the response to your pending request. If you are waiting for responses from more than one data manager, the timeframe begins on the date that you receive the final response from the last data manager.

3. *Dotted borders.* Some actions identified in the table are required only in certain circumstances. For example, if we don't send you a loan record detail report, because your cohort default rate is less than 10 percent, you must request one before you can request an adjustment or appeal. Timeframes for

actions that aren't always required are identified in the table by dotted borders:

(i) If you *are* required to perform that action, the timeframes begin on the same dates that they would if the timeframe borders were not dotted.

(ii) If you *are not* required to perform that action, the timeframe for your next required action is determined as if the timeframes with the dotted borders were not there. The timeframe for your next required action begins on the date that the last required action was completed.

BILLING CODE 4000–01–P

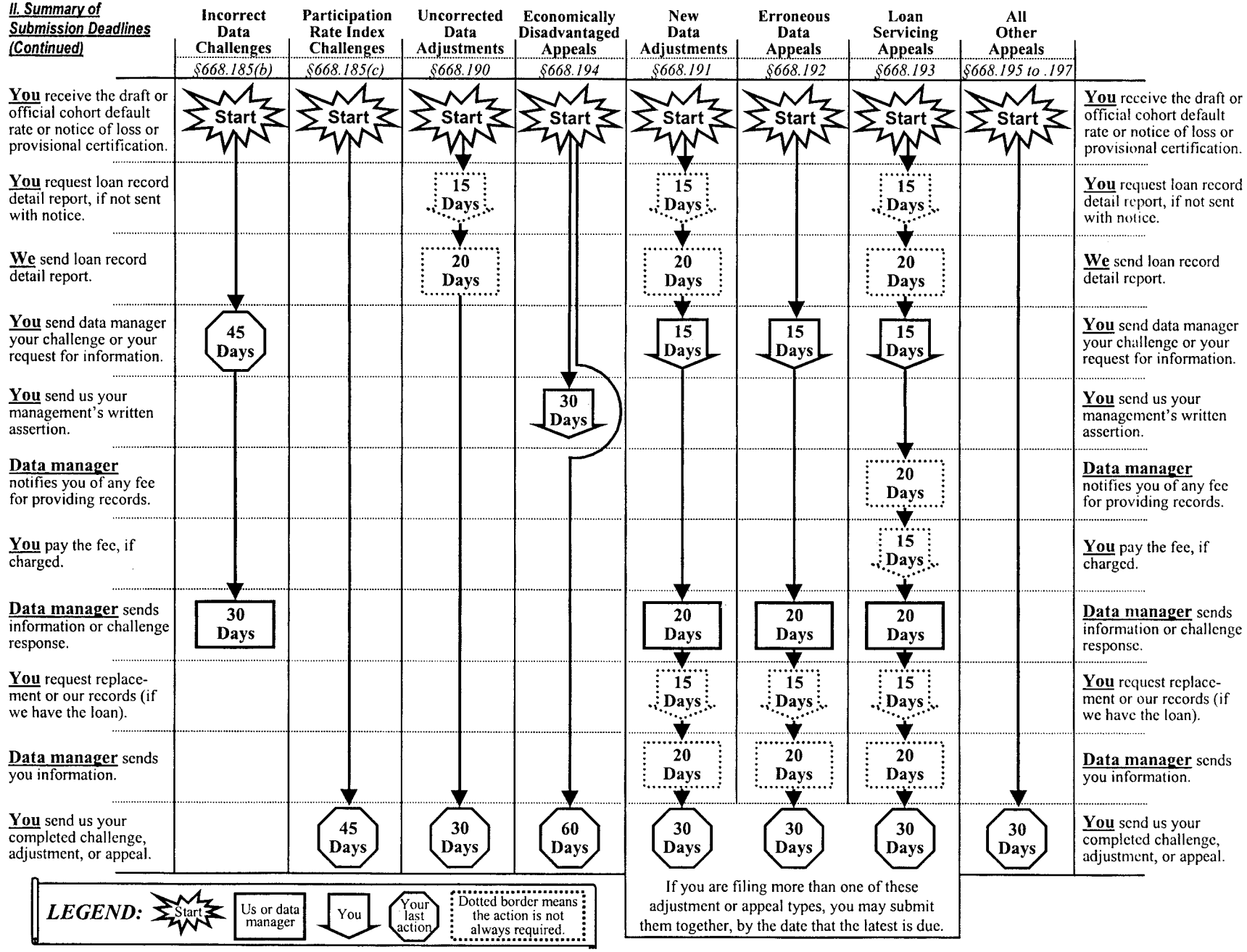

BILLING CODE 4000–01–C

Appendix B to Subpart M of Part 668—Sample Default Management Plan for Special Institutions To Use When Complying With § 668.198

This appendix is provided as a sample plan for those institutions developing a default management plan in accordance with § 668.198. It describes some measures you may find helpful in reducing the number of students that default on federally funded loans. These are not the only measures you could implement when developing a default management plan. In developing a default management plan, you must consider your history, resources, dollars in default, and targets for default reduction to determine which activities will result in the most benefit to your students and to you.

I. Core Default Reduction Strategies (From § 668.198(c)(1))

1. Establish a default management team by engaging your chief executive officer and relevant senior executive officials and enlisting the support of representatives from offices other than the financial aid office.
2. Identify and allocate the personnel, administrative, and financial resources appropriate to implement the default management plan.
3. Define the roles and responsibilities of the independent third party.
4. Define evaluation methods and establish a data collection system for measuring and verifying relevant default management statistics, including a statistical analysis of the borrowers who default on their loans.
5. Establish annual targets for reductions in your rate.
6. Establish a process to ensure the accuracy of your rate.

II. Additional Default Reduction Strategies

1. Enhance the borrower's understanding of his or her loan repayment responsibilities through counseling and debt management activities.
2. Enhance the enrollment retention and academic persistence of borrowers through counseling and academic assistance.
3. Maintain contact with the borrower after he or she leaves your institution by using activities such as skip tracing to locate the borrower.
4. Track the borrower's delinquency status by obtaining reports from data managers and FFEL Program lenders.
5. Enhance student loan repayments through counseling the borrower on loan repayment options and facilitating contact between the borrower and the data manager or FFEL Program lender.
6. Assist a borrower who is experiencing difficulty in finding employment through career counseling, job placement assistance, and facilitating unemployment deferments.
7. Identify and implement alternative financial aid award policies and develop alternative financial resources that will reduce the need for student borrowing in the first 2 years of academic study.
8. Familiarize the parent, or other adult relative or guardian, with the student's debt profile, repayment obligations, and loan status by increasing, whenever possible, the communication and contact with the parent or adult relative or guardian.

III. Defining the Roles and Responsibilities of Independent Third Party

1. Specifically define the role of the independent third party.
2. Specify the scope of work to be performed by the independent third party.
3. Tie the receipt of payments, if required, to the performance of specific tasks.
4. Assure that all the required work is satisfactorily completed.

IV. Statistics for Measuring Progress

1. The number of students enrolled at your institution during each fiscal year.
2. The average amount borrowed by a student each fiscal year.
3. The number of borrowers scheduled to enter repayment each fiscal year.
4. The number of enrolled borrowers who received default prevention counseling services each fiscal year.
5. The average number of contacts that you or your agent had with a borrower who was in deferment or forbearance or in repayment status during each fiscal year.
6. The number of borrowers at least 60 days delinquent each fiscal year.
7. The number of borrowers who defaulted in each fiscal year.
8. The type, frequency, and results of activities performed in accordance with the default management plan.

Appendix A to Part 668 [Removed]

13. Appendix A to Part 668 is removed.

Appendix B to Part 668 [Redesignated as Appendix A to Subpart B of Part 668]

14. Appendix B to Part 668 is redesignated as Appendix A to Subpart B of Part 668.

Appendix C to Part 668 [Redesignated as Appendix A to Subpart B of Part 668]

15. Appendix C to Part 668 is redesignated as Appendix B to Subpart B of Part 668.

Appendix D to Part 668 [Removed]

16. Appendix D to Part 668 is removed.

Appendix E to Part 668 [Redesignated as Appendix A to Subpart D of Part 668]

17. Appendix E to Part 668 is redesignated as Appendix A to Subpart D of Part 668.

Appendix F to Part 668 [Redesignated as Appendix A to Subpart L of Part 668]

18. Appendix F to Part 668 is redesignated as Appendix A to Subpart L of Part 668.

Appendix G to Part 668 [Redesignated as Appendix B to Subpart L of Part 668]

19. Appendix G to Part 668 is redesignated as Appendix B to Subpart L of Part 668.

Appendix H to Part 668 [Removed]

20. Appendix H to Part 668 is removed.

PART 682—FEDERAL FAMILY EDUCATION LOAN (FFEL) PROGRAM

21. The authority citation for Part 682 continues to read as follows:

Authority: 20 U.S.C. 1071 to 1087–2, unless otherwise noted.

22. In § 682.401, paragraph (b)(15) is revised to read as follows:

§ 682.401 Basic program agreement.

* * * * *

(b) * * *

(15) *Guaranty agency verification of default data.* A guaranty agency must meet the requirements and deadlines provided for it in subpart M of 34 CFR part 668 for the cohort default rate process.

* * * * *

23. In § 682.410, paragraph (c)(1)(i)(C) is revised to read as follows:

§ 682.410 Fiscal, administrative, and enforcement requirements.

* * * * *

(c) * * *

(1) * * *

(i) * * *

(C) Each participating school, located in a State for which the guaranty agency is the principal guaranty agency, that has a cohort default rate, as described in subpart M of 34 CFR part 668, for either of the 2 immediately preceding fiscal years, as defined in 34 CFR 668.182, that exceeds 20 percent, unless the school is under a mandate from the Secretary under subpart M of 34 CFR part 668 to take specific default reduction measures or if the total dollar amount of loans entering repayment in each fiscal year on which the cohort default rate over 20 percent is based does not exceed $100,000; or

* * * * *

§ 682.601 [Amended]

24. In § 682.601, paragraph (a)(6) is amended by removing ''§ 668.17'' and adding, in its place, ''subpart M of 34 CFR part 668''.

§ 682.603 [Amended]

25. In § 682.603, paragraph (g) is amended by removing ''an FFEL cohort default rate, Direct Loan cohort rate, or weighted average cohort rate'' and

adding, in its place, ''a cohort default rate''.

§ 682.604 [Amended]

26. Section 682.604 is amended—

A. In paragraphs (c)(5)(i), (c)(5)(ii), (c)(10)(i)(B), and (c)(10)(ii), by removing ''an FFEL cohort default rate, Direct Loan Program cohort rate, or weighted average cohort rate'' and adding, in its place, ''a cohort default rate, calculated under subpart M of 34 CFR part 668,''.

B. By removing paragraph (f)(3).

C. By redesignating paragraphs (f)(4) and (f)(5) as paragraphs (f)(3) and (f)(4), respectively.

D. By removing paragraph (g)(3).

E. By redesignating paragraphs (g)(4) and (g)(5) as paragraphs (g)(3) and (g)(4), respectively.

PART 685—WILLIAM D. FORD FEDERAL DIRECT LOAN PROGRAM

27. The authority citation for Part 685 continues to read as follows:

Authority: 20 U.S.C. 1087a *et seq.*, unless otherwise noted.

§ 685.301 [Amended]

28. Section 685.301 is amended—

A. In paragraphs (b)(8)(i)(A)(*2*) and (b)(8)(i)(B), by removing ''a Direct Loan Program cohort rate, FFEL cohort default rate, or weighted average cohort rate'' and adding, in its place, ''a cohort default rate, calculated under subpart M of 34 CFR part 668,''.

B. In paragraph (b)(8)(ii), by removing ''an FFEL cohort default rate, Direct Loan cohort rate, or weighted average cohort rate'' and adding, in its place, ''a cohort default rate, calculated under subpart M of 34 CFR part 668,''.

§ 865.303 [Amended]

29. Section 685.303 is amended—

A. In paragraphs (b)(4)(i)(A) and (b)(4)(i)(B), by removing ''a Direct Loan Program cohort rate, FFEL cohort default rate, or weighted average cohort rate'' and adding, in its place, ''a cohort default rate, calculated under subpart M of 34 CFR part 668,''.

B. In paragraph (b)(4)(ii), by removing ''an FFEL cohort default rate, Direct Loan cohort rate, or weighted average cohort rate'', and adding, in its place, ''a cohort default rate, calculated under subpart M of 34 CFR part 668,''.

§ 685.304 [Amended]

30. Section 685.304 is amended—

A. By removing paragraph (a)(4).

B. By redesignating paragraphs (a)(5), (a)(6), and (a)(7) as paragraphs (a)(4), (a)(5), and (a)(6), respectively.

C. By removing paragraph (b)(5).

D. By redesignating paragraphs (b)(6) and (b)(7) as paragraphs (b)(5) and (b)(6), respectively.

PART 690—FEDERAL PELL GRANT PROGRAM

31. The authority citation for Part 690 continues to read as follows:

Authority: 20 U.S.C. 1070a, unless otherwise noted.

§ 690.7 [Amended]

32. Section 690.7 is amended—

A. In paragraph (c)(1), by removing ''34 CFR 668.17'' and adding, in its place, ''subpart M of 34 CFR part 668''.

B. In paragraph (c)(2), by removing ''34 CFR 668.17(b)'' and adding, in its place, ''34 CFR 668.187''.

[FR Doc. 00–27741 Filed 10–31–00; 8:45 am]

BILLING CODE 4000–01–P

Federal Register

Wednesday,
November 1, 2000

Part VIII

Environmental Protection Agency

40 CFR Part 761

Polychlorinated Biphenyls (PCB's); Return of PCB Waste From U.S. Territories Outside the Customs Territory of the United States; Proposed Rule

ENVIRONMENTAL PROTECTION AGENCY

40 CFR Part 761

[OPPTS–66020; FRL–6750–6]

Polychlorinated Biphenyls (PCB's); Return of PCB Waste from U.S. Territories Outside the Customs Territory of the United States

AGENCY: Environmental Protection Agency (EPA).

ACTION: Proposed Rule.

SUMMARY: EPA is proposing to clarify that PCB waste in United States' territories and possessions outside the customs territory of the United States may be returned to the U.S. Customs Territory for proper disposal. This proposed rule interprets the prohibition on the manufacture of PCBs at Section 6(e) of the Toxic Substances Control Act (TSCA) to allow the movement of PCB waste among any States of the United States for the purpose of disposal, and that such movement is not considered ''import.'' This interpretation will allow U.S. territories and possessions which fall outside of the definition of ''customs territory of the United States'' to dispose of their PCB waste in the mainland of the United States where facilities are available that can properly dispose of PCB waste. Thus, this rule would ensure that a safe and viable mechanism exists for the protection of health and the environment for those citizens in areas of the United States where facilities are not available for the proper management and disposal of PCB waste. Because disposal of these wastes may occur only at approved facilities, no unreasonable risks to health or the environment on the mainland United States will be created by this rule.

DATES: Comments, identified by the docket number OPPTS–66020, must be received by EPA on or before December 1, 2000.

ADDRESSES: Comments may be submitted by mail, electronically, or in person. Please follow the detailed instructions for each method as provided in Unit I. of the **SUPPLEMENTARY INFORMATION** section. To ensure proper receipt by EPA, it is imperative that you identify docket control number OPPTS–66020 in the subject line on the first page of your response.

FOR FURTHER INFORMATION CONTACT: For general information contact: Barbara Cunningham, Acting Director, Environmental Assistance Division, Office of Pollution Prevention and Toxics (7408), Environmental Protection Agency, 1200 Pennsylvania Ave., NW., Washington, DC 20460; telephone numbers: 202–554–1404; e-mail address: *TSCA-Hotline@epa.gov.*

For technical information contact: Peggy Reynolds, OPPT/NPCD, 7404, Environmental Protection Agency, 1200 Pennsylvania Ave., NW., Washington, DC 20460; telephone number: 202–260–3965; fax number: 202–260–1724; e-mail address: *reynolds.peggy@epa.gov.*

SUPPLEMENTARY INFORMATION:

I. General Information

A. Does this Action Apply to Me?

You may be potentially affected by this action if you are in a United States territory or possession outside of the customs territory of the United States, and you manufacture, process, distribute in commerce, or use PCBs. Examples of such territories and possessions are Guam, American Samoa, the Commonwealth of the Northern Mariana Islands (CNMI) including Saipan, and the United States Virgin Islands. Potentially affected entities may include, but are not limited to:

Types of entities	NAICS codes	Examples of potentially affected entities
Crude Petroleum and Natural Gas Extraction	211111	Facilities that own electrical equipment containing PCBs
Electric Power Generation; Transmission and Distribution	2211	Facilities that own electrical equipment containing PCBs
Food Manufacturing	311	Facilities that own electrical equipment containing PCBs
Petroleum and Coal Products Manufacturing	324	Facilities that own electrical equipment containing PCBs
Chemical Manufacturing	325	Facilities that own electrical equipment containing PCBs
Primary Metal Manufacturing	331	Facilities that own electrical equipment containing PCBs
Waste Treatment and Disposal	5622	Facilities that own electrical equipment containing PCBs. Entities that process and distribute PCB waste
Materials Recovery Facilities	56292	Facilities that own electrical equipment containing PCBs. Entities that process and distribute PCB waste
Public Administration	92	Agencies that own electrical equipment containing PCBs

This listing is not intended to be exhaustive, but rather provides a guide for readers regarding entities likely to be affected by this action. Other types of entities not listed above could also be affected. The North American Industrial Classification System (NAICS) codes have been provided to assist you and others in determining whether or not this action might apply to certain entities. To determine whether you or your business may be affected by this action, you should carefully examine the applicability provisions in 40 CFR part 761. If you have any questions regarding the applicability of this action to a particular entity, consult the technical person listed in the **FOR FURTHER INFORMATION CONTACT** section.

B. How Can I Get Additional Information, Including Copies of this Document and Other Related Documents?

1. *Electronically.* You may obtain copies of this document and certain other available documents from the EPA Internet Home Page at *http//:www.epa.gov/.* On the Home Page select ''Laws and Regulations'' and then look up the entry for this document under **Federal Register**—Environmental Documents. You can also go directly to the **Federal Register** listings at *http//:www.epa.gov/fedrgstr/.*

Information about the Office of Prevention, Pesticides and Toxic Substances (OPPTS) and OPPTS related programs is available from *http//:www.epa.gov/internet/oppts/.* If you want additional information about EPA's PCB regulations at 40 CFR part 761, go to *http//:www.epa.gov/pcb.*

2. *In person.* The Agency has established an official record for this action under docket control number OPPTS–66020. The official record consists of the documents specifically referenced in this action, any public comments received during an applicable

comment period, and other information related to this action, including any information claimed as confidential business information (CBI). This official record includes the documents that are physically located in the docket, as well as the documents that are referenced in those documents. The public version of the official record does not include any information claimed as CBI. The public version of the official record, which includes printed, paper versions of any electronic comments submitted during an applicable comment period, is available for inspection in the TSCA Nonconfidential Information Center, Northeast Mall, Rm. B–607, Waterside Mall, 401 M St., SW., Washington, DC. The Center is open from 12 noon to 4 p.m., Monday through Friday, excluding legal holidays. The telephone number of the Center is (202) 260–7099.

C. How and to Whom Do I Submit Comments?

You may submit comments through the mail, in person, or electronically. To ensure proper receipt by EPA, it is imperative that you identify docket control number OPPTS–66020 in the subject line on the first page of your response.

1. *By mail*. Submit your comments to: Document Control Office (7407), Office of Pollution Prevention and Toxics (OPPT), U.S. Environmental Protection Agency, 1200 Pennsylvania Ave., NW., Washington, DC 20460.

2. *In person or by courier*. Deliver your comments to: the OPPT Document Control Office (DCO) in East Tower Rm. G–099, Waterside Mall, 401 M St., SW., Washington, DC. The DCO is open from 8 a.m. to 4 p.m., Monday through Friday, excluding legal holidays. The telephone number for the DCO is 202–260–7093.

3. *Electronically*. You may submit your comments electronically by E-mail to: oppt.ncic@epa.gov, or mail or deliver your computer disk to the addresses identified above. Do not submit any information electronically that you consider to be CBI. E-mailed comments must be submitted as an ASCII file avoiding the use of special characters and any form of encryption. Comments will also be accepted on standard computer disks in WordPerfect 689 or ASCII file format. All comments in electronic form must be identified by the docket control number OPPTS–66020. Electronic comments may also be filed online at many Federal Depository Libraries.

D. How Should I Handle CBI That I Want to Submit to the Agency?

Do not submit any information electronically that you consider to be CBI. You may claim information that you submit to EPA in response to this document as CBI by marking any part or all of that information as CBI. Information so marked will not be disclosed except in accordance with procedures set forth in 40 CFR part 2. In addition to one complete version of the comment that includes any information claimed as CBI, a copy of the comment that does not contain the information claimed as CBI must be submitted for inclusion in the public version of the official record. Information not marked confidential will be included in the public version of the official record without prior notice. If you have any questions about CBI or the procedures for claiming CBI, please consult the technical person identified in the **FOR FURTHER INFORMATION CONTACT** section.

II. Background

A. What Action is the Agency Taking?

EPA proposes to amend the disposal regulations at 40 CFR 761.99 to allow certain PCB waste located anywhere in the United States, including the territories and possessions of the United States that are not inside the customs territory of the United States (hereafter ''territories and possessions''), to be moved to any area within the United States for disposal. The proposed rule would clarify that such movement is not considered ''import'' for purposes of the ban on manufacturing PCBs under TSCA section 6(e)(3).

B. What is the Agency's Authority for Taking this Action?

EPA is taking this action to clarify its interpretation of the TSCA provisions relating to the manufacture of PCBs as an exercise of the agency's inherent authority to issue regulations interpreting the statutes it administers. This proposed regulation would codify EPA's interpretation of an undefined term, ''import'' in the definition of ''manufacture'' under section 3(7) of TSCA, for purposes of section 6(e)(3) of TSCA. EPA's definition of the term ''import'' for all other purposes under TSCA is not affected.

III. Summary of the Proposed Action

A. What Risks do PCBs Present and How are PCBs Regulated?

PCBs cause significant ecological and human health effects, including cancer, neurotoxicity, reproductive and developmental toxicity, immune system suppression, liver damage, skin irritation, and endocrine disruption (Ref. 1). EPA has found that any exposure of humans or the environment to PCBs may be significant, depending on such factors as the quantity of PCBs involved in the exposure, the likelihood of exposure to humans and the environment, and the effect of exposure (40 CFR 761.20). PCBs are readily absorbed through the skin and at even faster rates when inhaled. Because PCBs are stored in animal fatty tissue, humans are also exposed to PCBs through ingestion of animal products. Significantly, bioaccumulated PCBs appear to be even more toxic than those found in the ambient environment, since the more toxic PCB congeners are more persistent and thus more likely to be retained (Ref. 1).

Under section 6(e) of the Toxic Substances Control Act (TSCA), 15 U.S.C. 2605(e), and implementing regulations at 40 CFR part 761, the manufacture, processing, and distribution in commerce of PCBs are banned unless EPA issues a regulatory exemption to the ban. The ban on manufacture of PCBs was designed to prevent the creation or introduction to the United States of new PCBs, and it has been largely successful. Use of PCBs is banned except in a totally enclosed manner or as authorized by rule based on a finding that the use will not pose an unreasonable risk to human health or the environment. Disposal of PCBs is strictly controlled to minimize release to the environment. By enacting TSCA section 6(e), Congress established a presumption that PCBs pose an unreasonable risk of injury to health and the environment. *See, Central and Southwest Services, et al. v. EPA*, 220 F.3d 683, 688 (5th Cir. 2000).

Before the statutory ban was enacted in 1976, PCBs were widely used in industrial applications, particularly as insulating fluids in electrical equipment. Utilities and other industries lawfully manufactured and sold items such as PCB electrical equipment and hydraulic or heat transfer equipment. After TSCA's general bans on manufacture, processing, distribution in commerce, and use of such items went into effect, EPA authorized the continued use of much of this equipment subject to conditions that protect against an unreasonable risk to health or the environment from the PCBs in the equipment. As these items reach the end of their useful lives, the owners are responsible for disposing of them following the stringent requirements of 40 CFR part 761. Any PCBs that are released from the equipment also must

be disposed of following these requirements.

TSCA was enacted to protect all of the citizens of the United States from unreasonable risk of injury to health or the environment from exposure to chemical substances. TSCA sections 3(13) and 3(14) define ''United States'' to include ''any State of the United States, the District of Columbia, the Commonwealth of Puerto Rico, the Virgin Islands, Guam, the Canal Zone, American Samoa, the Northern Mariana Islands, or any other territory or possession of the United States.'' Thus, the prohibitions and restrictions on PCBs under TSCA section 6(e) and its implementing regulations protect not only United States citizens in the 50 States, but United States citizens in all the territories and possessions of the United States. PCBs in the 50 States and in the territories and possessions must be managed and disposed of in a manner that does not present an unreasonable risk to health or the environment.

B. What Special Problems Do PCBs Present in the Territories and Possessions?

PCBs and PCB waste in the territories and possessions pose an especially great environmental threat. The territories and possessions have no permitted commercial PCB disposal facilities, so PCB waste is accumulated in long-term storage. Many of the territories and possessions are subject to frequent typhoons and earthquakes, which can severely damage storage areas and other buildings. PCBs and PCB waste in storage therefore may present a greater risk to human health and the environment than PCBs stored in the mainland United States (Ref. 8).

Between 1945 and 1990, within 180 nautical miles of Guam, there were 118 tropical storms (wind speed 40 to 72 mph), 36 typhoons (wind speed 75 to 149 mph), and 8 super-typhoons (wind speed 150 mph or more). Between 1973 and 2000, Guam has seen an average of 18 earthquakes a year within a 100 kilometer radius. During the last 10 years, 12 earthquakes of magnitude 5 or higher have occurred within a 50 kilometer radius of Guam. The Commonwealth of the Northern Marianas Islands is 120 miles from Guam and shares similar geologic characteristics, so the risks would be similar (Ref. 8).

The Samoas lie squarely within the South Pacific's notorious cyclone belt. In American Samoa, Cyclone Tusi caused extensive damage to property, vegetation, and wildlife in 1987. Cyclones occur, on average, every 10 to 15 years, but in the early 1990s, the Samoas were devastated by two of the strongest and most destructive storms on record. Cyclone Ofa struck in February, 1990, bringing winds of up to 250 kilometers per hour, killing 16 people and leveling much of the island of Savai'i. In 1991, Cyclone Val pummeled the islands for 5 days with winds up to 260 kilometers per hour and waves of up to 25 meters in height. Although the storm destroyed nearly three times as much as its predecessor, the death toll was the same. Total damage was estimated at $380 million (Ref. 8).

PCBs that are released to the environment in the territories and possessions, through natural disasters or other events, can present significant exposure risks to residents of these areas. Many island residents consume fish for subsistence, and PCBs bioaccumulate in fish. In addition, island natural resources are severely limited and therefore vulnerable. Even a small quantity of PCBs seeping into the groundwater system could permanently eliminate an island's only source of clean drinking water (Ref. 8).

Disposal of PCBs in the territories and possessions presents a special challenge. Most PCBs that are regulated for disposal must be disposed of in a TSCA-approved facility, such as an incinerator or a chemical waste landfill (40 CFR part 761, subpart D). However, as noted above, there are no TSCA-approved commercial PCB disposal facilities in any of the territories or possessions of the United States (Ref. 6), so disposal in the territory or possession where the waste is generated is not possible in most cases. A recent survey of the status of PCB waste in the territories and possessions shows that, because of the lack of disposal options, PCB wastes have been placed in storage awaiting disposal in facilities that are not approved commercial storage facilities under TSCA. In some cases, spills or releases from these facilities are inadequately controlled, presenting risks to health and the environment (Ref. 8).

The territories and possessions cannot dispose of their waste at facilities outside the United States if the PCB concentration is ≥50 ppm because EPA regulations prohibit the export for disposal of such waste (see 40 CFR 761.97). Moreover, it is a violation of the PCB regulations to dilute PCB wastes to lower concentrations to avoid these restrictions on export (40 CFR 761.1(b)(5)). Even if such export were not prohibited, it is not clear that export would be a viable option. Even assuming that foreign countries would be willing to accept PCB waste from the United States, there is some uncertainty about the disposal capacity at foreign disposal sites capable of managing PCBs (Ref. 17). Furthermore, EPA disfavors disposing of PCB wastes generated in the United States in other countries.

The only remaining disposal option for most TSCA-regulated PCB waste in the territories and possessions is disposal in one of the TSCA-approved facilities in the mainland United States. However, EPA has historically interpreted TSCA in a way that made this option unavailable. Since 1979, TSCA section 6(e) has banned the manufacture of PCBs except under an exemption issued by rulemaking. TSCA section 3(7) defines ''manufacture'' to include ''import into the customs territory of the United States (as defined in general note 2 of the Harmonized Tariff Schedule of the United States).'' General note 2 defines the ''customs territory of the United States'' as ''any State of the United States, the District of Columbia, and Puerto Rico.'' Thus, any movement of PCBs from a location outside the customs territory of the United States to a location inside the customs territory could be considered to be an import of PCBs into the customs territory of the United States. Since most of the territories and possessions, such as Guam and American Samoa, are not included within the definition of ''customs territory of the United States'' as found in the Harmonized Tariff Schedule, EPA has historically interpreted a movement of PCBs from one of these areas to a mainland State to be an ''import'' within the meaning of ''manufacture'' as it is used in TSCA section 6(e)(3). EPA has in the past exercised limited discretion to allow the movement of PCB waste from U.S. territories and possessions to the mainland United States (Ref. 15).

C. How Would This Proposed Rule Address Disposal of PCBs in the Territories and Possessions?

EPA proposes to amend its regulations to allow the movement of PCB waste for disposal among any States of the United States, as defined in TSCA sections 3(13) and 3(14), regardless of whether the waste enters or leaves the customs territory of the United States, provided that the PCBs [or the PCB waste] were present in the United States on January 1, 1979, when the ban on manufacturing took effect, and have remained within the United States since that date. EPA would not consider these movements to be imports subject to the ban on manufacturing under TSCA sections 3(7) and 6(e)(3)

As noted above, the territories and possessions are subject to all of TSCA's requirements. EPA is charged with implementing section 6(e) to protect the health and environment of all United States citizens, including the residents of the territories and possessions. To interpret the statute as prohibiting the movement of PCB waste from the territories and possessions to disposal facilities in the United States mainland puts the residents of the territories and possessions at a serious disadvantage compared to residents of areas that fall within the definition of the customs territory. Because there are no EPA-approved commercial PCB storage or disposal facilities outside the customs territory, and because of the unique environmental conditions in the territories and possessions, the Unites States citizens of these areas are subject to a higher likelihood of exposure to PCBs, and thus a higher risk of injury.

Moreover, EPA is particularly concerned about the risks from improper disposal of PCBs wherever it may occur. PCBs are persistent in the environment and can become dispersed world-wide. Research supporting EPA's report to Congress, *Deposition of Air Pollutants to the Great Waters* (Refs. 2, 3, 4 and 5), indicates that up to 89% of the PCB loading for Lake Superior occurs through air deposition, much of it from distant sources. Figures for the other Great Lakes range from 6% to 63%. Based on the persistence of PCBs in the global environment and EPA's finding that any exposure to human beings or the environment may be significant, EPA believes that the safe disposal of PCBs in approved United States facilities poses less risk of injury to health or the environment in the United States than the continued presence of PCBs in the territories and possessions, since proper disposal in this country provides protection against possible hazards from improper disposal elsewhere.

EPA is also concerned that the only options currently available for handling PCBs in the territories and possessions may violate the requirements of TSCA and its implementing regulations. Indefinite storage of PCB waste is not lawful under EPA's regulations at 40 CFR 761.65. Disposal in a facility that is not EPA-approved would also violate the regulations. As noted above, shipment of any wastes containing PCBs ≥50 ppm to a foreign country for disposal would violate the export prohibition. In contrast, residents of areas inside the customs territory that do not have EPA-approved PCB disposal facilities can simply ship their PCB wastes to an approved facility in another State. For example, the residents of Alaska and Hawaii, States in which no TSCA-approved disposal facilities are located, can ship their PCBs to facilities in the mainland United States for disposal (Ref. 13), in spite of the fact that it is impossible to move wastes from those States to the mainland without either entering Canada or crossing international waters (40 CFR 761.99).

EPA has determined that its previous interpretation of the definition of ''manufacture'' is not mandated by the language of TSCA, results in inequitable treatment among different areas within the United States, does not adequately protect health and the environment throughout the United States, and therefore is not in the public interest. EPA believes that the term ''import,'' as commonly understood, was not intended to include the movement of PCB waste that has never been outside the United States or outside the regulatory control of TSCA (after enactment) from one area of the United States (the territories and possessions) to another area of the United States (the mainland) for disposal. There is an obvious distinction between that type of movement and the introduction of a chemical into the United States from a foreign country, which is clearly an import. This latter category is much more analogous to the manufacture of a new chemical substance in the United States. Therefore, EPA proposes to interpret the movement of PCB waste from the territories and possessions into the customs territory of the United States for disposal not to be an import, and therefore not within the ban on manufacture under TSCA section 6(e).

This proposed interpretive rule would allow the movement of PCB waste for disposal among any States of the United States, as defined in TSCA sections 3(13) and 3(14), regardless of whether the waste enters or leaves the customs territory of the United States, provided that the PCBs in the waste were present in the United States on January 1, 1979, when the ban on manufacturing took effect, and has remained within the United States since that date. This would allow PCB waste that was present in the territories and possessions at the time TSCA's ban on manufacturing took effect, and that remained within the territories and possessions since that date, to be stored and disposed of in any facility in the United States that meets the requirements of 40 CFR part 761, subpart D. It would also allow PCBs that were present in the territories and possessions at the time TSCA's bans took effect, but were not designated as waste until after that date, to be stored and disposed of in any subpart D facility in the United States, as long as the PCBs and PCB waste had remained in the United States. Finally, it would allow PCBs or PCB wastes that were transferred from an area in the United States that is outside the territories and possessions, but that was moved to a territory or possession after January 1, 1979, and that has never left the United States, to be stored and disposed of in any subpart D facility in the United States. EPA would not consider movement of any of these wastes to the customs territory of the United States to be an import subject to the ban on manufacturing under TSCA section 6(e).

This proposed rule would apply to PCB waste that is present in the territories and possessions as the result of conduct that was legal at the time it occurred (for example, PCB materials that were brought to the territories before TSCA's ban on distribution in commerce became effective), and that has been subject to regulation under TSCA throughout its lifespan; or PCB equipment that was lawfully in use in one of the States, that was transferred to a territory or possession for continued lawful use, and that reached the end of its useful life and became subject to disposal while in the territory or possession.

This proposed amendment would also be consistent with EPA's longstanding policy that it does not interpret movement of PCBs purchased or procured in the United States by the Federal Government, taken overseas for use in United States Government facilities, remained under the control and jurisdiction of the United States Government, and subsequently returned to the United States for disposal in an approved facility as either exports or imports for purposes of TSCA section 6(e) (Refs. 14 and 16). EPA established this policy because the wastes had always been the property of the United States and disposal facilities for these wastes might not be readily available overseas.

This proposed rule would not allow disposal in the United States of PCBs transported to the territories and possessions from foreign countries after the effective date of the ban on manufacture in TSCA section 6(e)(3). The purpose of this proposal is to ensure that all United States PCB waste can be disposed of in compliance with the requirements of TSCA section 6(e) and its implementing regulations. This proposal is not intended to allow the territories and possessions to become a conduit to the United States for PCB waste generated in other countries.

Finally, EPA has not made a formal finding of ''no unreasonable risk'' for this proposed regulation. This regulation is not being proposed under TSCA section 6(e), but rather as an exercise of EPA's inherent authority to interpret the statutes it administers.

IV. References and Documents in the Record

As indicated in Unit I.B.2., the official record for this rulemaking has been established under docket control number OPPTS–66020, the public version of which is available for inspection as specified in Unit I.B.2. The following is a listing of the documents that have already been placed in the official record for this rulemaking:

A. Federal Register Notices

1. U.S. Environmental Protection Agency (USEPA). 44 FR 31514, May 31, 1979, ''Polychlorinated Biphenyls (PCBs); Manufacturing, Processing, Distribution in Commerce, and Use Prohibitions: Final Rule.''

2. USEPA. 45 FR 29115, May 1, 1980, ''Polychlorinated Biphenyls (PCBs); Expiration of the Open Border Policy for PCB Disposal: Notice.'' OPTS 62008.

3. USEPA. 59 FR 62788, December 6, 1994, ''Disposal of Polychorinated Biphenyls: Proposed Rule.'' OPPTS–66009A.

4. USEPA. 61 FR 11096, March 18, 1996, ''Disposal of Polychlorinated Biphenyls; Import for Disposal: Final Rule.'' OPPTS–66009B.

5. USEPA. 63 FR 35384, June 29, 1998, ''Disposal of Polychlorinated Biphenyls (PCBs): Final Rule.'' OPPTS–66009C.

B. Reference Documents

1. USEPA, Office of Research and Development (ORD). PCBs Cancer Dose-Response Assessment and Application to Environmental Mixtures. EPA600P–96001F (September 1996): 75pp. OPPTS–66009C.

2. USEPA, Office of Air Quality Planning and Standards (OAQPS). Deposition of Air Pollutants to the Great Waters, First Report to Congress. EPA–453R–93–055 (May 1994): 136pp. OPPTS–66009B.

3. USEPA, OAQPS. Identification of Sources Contributing to the Contamination of the Great Waters by Toxic Compounds. EPA–453R–94–087 (March 17, 1993): 145pp. OPPTS–66009B.

4. USEPA, OAQPS. Relative Atmospheric Loadings of Toxic Contaminants and Nitrogen to the Great Waters. EPA–453R–94–086 (March 15, 1993): 142pp. OPPTS–66009B.

5. USEPA. Chapter 2.2, Exposure and Effects of Airborne Contamination for the Great Waters Program Report. EPA–453R–94–085 (December 22, 1992): 201pp. OPPTS–66009B.

6. USEPA, Office of Prevention, Pesticides, and Toxic Substances (OPPTS). Commercially Permitted PCB Disposal Companies (April 2000): 3pp.

7. USEPA, Office of Pollution Prevention and Toxics (OPPT). Excerpt from the PCB Waste Handler Database; Facility Information for U.S. Territories and Possessions (September 27, 2000): 12pp.

8. USEPA, Region IX. Memo from Lily Lee, Guam Program Manager, to Enrique Manzanilla, Director, Cross Media Division, Re: Summary of PCB Waste Quantities and Concentrations in the US Territories (July 19, 2000): 5pp.

9. Unitek Environmental-Guam. Letter from LeRoy Moore, President, to John Malone [sic], Director, National Program Chemicals Division, Re: PCB Shipments from Guam and Possessions of the United States for Disposal in the Mainland United States (May 11, 2000): 2pp.

10. USEPA, OPPT. Note from Peter Gimlin to the File, Re: Unitek Environmental-Guam (UEG) Meeting (September 27, 2000): 1p.

11. U.S. Congress. Letter from Robert A. Underwood, House of Representatives, to Carol M. Browner, Administrator, EPA, Re: Disposal of Polychlorinated Biphenyls (PCBs) from Guam and the Other U.S. Territories (April 12, 2000): 2pp.

12. USEPA, Region IX. Letter from Felicia Marcus, Regional Administrator, to Robert A. Underwood, U.S. House of Representatives, Re: Disposal of Polychlorinated Biphenyl Waste (February 4, 2000): 2pp.

13. USEPA, OPPT. Memo from John W. Melone, Director, Chemical Management Division, to George Abel, Chief, Pesticides and Toxic Substances Branch, USEPA Region X, Re: Transit of PCB Waste Generated in the United States Through a Foreign Country (January 19, 1995): 2pp.

14. USEPA, OPPT. Letter from John W. Melone, Director, Chemical Management Division, to Arthur J. Brown, National Science Foundation, Re: Request to Return PCBs in Antarctica to the United States for Disposal (March 11, 1994): 3pp.

15. USEPA, OCM and OE. Letter from Michael F. Wood, Director, Compliance Division, and Michael J. Walker, Enforcement Counsel for the Toxics Litigation Division, to Marion P. Herrington, General Electric Company, Re: Transfer of PCB Waste Generated in A U.S. Territory to An Approved Disposal Facility in the Continental United States (August 14, 1992): 2pp.

16. USEPA, Office of Toxic Substances (OTS). Letter from Don R. Clay, Director to Colonel Joseph T. Cuccaro, Defense Logistics Agency, Re: USEPA Position on DOD Owned PCB Fluid Located Abroad and Returned to the U.S. for Disposal (February 7, 1984): 3pp.

17. United Nations Environment Programme (UNEP). Inventory of World-wide PCB Destruction Capacity, First Issue (December 1998): 85pp.

18. U.S. Congress. Congressional Record from the House of Representatives, H8598, Guam's Environmental Problems (October 2, 2000): 1p.

19. U.S. Congress. Letter from Robert A. Underwood, House of Representatives, to Carol Browner, Administrator, EPA, Re: Inability of Guam to Import PCBs into the U.S. Mainland for Proper Disposal (December 10, 1999): 2 pp.

20. USEPA, OPPTS. Letter from Susan H. Wayland, Acting Assistant Administrator, to Robert A. Underwood, U.S. House of Representatives, Re: Disposal of PCB Waste in Guam (June 14, 2000): 2 pp.

21. USEPA, OPPTS. Letter from Susan H. Wayland, Acting Assistant Administrator, to Robert A. Underwood, U.S. House of Representatives, Re: Meeting on PCB Waste in Guam (September 29, 2000): 2 pp.

V. Regulatory Assessment Requirements

A. Executive Order 12866

Under Executive Order 12866, entitled *Regulatory Planning and Review* (58 FR 51735, October 4, 1993), the Office of Management and Budget (OMB) has determined that this action is not a ''significant regulatory action'' subject to review by OMB, because this action is not likely to result in a rule that meets any of the criteria for a ''significant regulatory action'' provided in section 3(f) of the Executive Order. This proposed rule simply clarifies EPA's interpretation of the TSCA section 6(e) provisions relating to the manufacture of PCBs.

B. Regulatory Flexibility Act (RFA)

Pursuant to section 605(b) of the Regulatory Flexibility Act (RFA), as amended by the Small Business Regulatory Enforcement Fairness Act of 1996, 5 U.S.C. 601 et seq., the Agency hereby certifies that this final rule will not have a significant economic impact on a substantial number of small entities. The factual basis for this determination is that this action is not expected to result in any direct adverse impact for small entities. This rule interprets the prohibition on the ''manufacture of PCBs'' in a manner which affords U.S. citizens (including small entities) residing in U.S. territories and possessions located outside the ''customs territory of the United States'' an opportunity to dispose of PCB waste when facilities that require EPA approval to manage PCB waste are not readily available. This rule is being promulgated in the public interest to ensure equitable treatment among different areas within the United States and adequate protection of health and the environment throughout the United States. This rule provides a mechanism for the disposal of PCB waste resulting from natural disasters (e.g., tropical storms, cyclones, typhoons and hurricanes), former use of U.S. territories and possessions for defense purposes, spills of PCBs and when PCB equipment has reached the end of its natural life span.

C. Paperwork Reduction Act (PRA)

This regulatory action does not contain any information collection requirements that require approval by the Office of Management and Budget (OMB) under the Paperwork Reduction Act (PRA), 44 U.S.C. 3501 et seq.

D. Unfunded Mandates Reform Act (UMRA)

Pursuant to Title II of the Unfunded Mandates Reform Act of 1995 (UMRA), Public Law 104–4, EPA has determined that this action does not contain a Federal mandate that may result in expenditures of $100 million or more for State, local or tribal governments, in the aggregate, or on the private sector in any one year. The UMRA requirements in sections 202, 204, and 205 do not apply to this rule, because this action does not contain any ''Federal mandates'' or impose any ''enforceable duty'' as defined by UMRA on StateTribal, or local governments or on the private sector. The requirements in section 203 do not apply because this rule does not contain any regulatory requirements that might significantly or uniquely affect small governments.

E. Executive Order 13132

Executive Order 13132, entitled *Federalism* (64 FR 43255, August 10, 1999), requires EPA to develop an accountable process to ensure ''meaningful and timely input by State and local officials in the development of regulatory policies that have federalism implications.'' ''Policies that have federalism implications'' are defined in the Executive Order to include regulations that have ''substantial direct effects on the States, on the relationship between the national government and the States, or on the distribution of power and responsibilities among the various levels of government.''

This proposed rule does not have federalism implications, because it will not have substantial direct effects on the States, on the relationship between the national government and the States, or on the distribution of power and responsibilities among the various levels of government, as specified in Executive Order 13132. This action interprets the TSCA prohibition on the manufacture of PCBs in a manner which allows PCB waste in U.S. territories and possessions located outside of the customs territory of the U.S. to be disposed of in EPA-approved facilities on the mainland of the United States. Thus, the requirements of section 6 of the Executive Order do not apply to this rule.

F. Executive Order 13084

Under Executive Order 13084, entitled *Consultation and Coordination with Indian Tribal Governments* (63 FR 27655, May 19, 1998), EPA may not issue a regulation that is not required by statute, that significantly or uniquely affects the communities of Indian tribal governments, and that imposes substantial direct compliance costs on those communities unless the Federal government provides the funds necessary to pay the direct compliance costs incurred by the tribal governments, or EPA consults with those governments.

If EPA complies by consulting, Executive Order 13084 requires EPA to provide to the Office of Management and Budget, in a separately identified section of the preamble to the rule, a description of the extent of EPA's prior consultation with representatives of affected tribal governments, a summary of the nature of their concerns, and a statement supporting the need to issue the regulation. In addition, Executive Order 13084 requires EPA to develop an effective process permitting elected officials and other representatives of Indian tribal governments ''to provide meaningful and timely input in the development of regulatory policies on matters that significantly or uniquely affect their communities.''

This rule does not significantly or uniquely affect the communities of Indian tribal governments, nor does it impose substantial direct compliance costs on such communities. It interprets the TSCA prohibition on the manufacture of PCBs in a manner which allows PCB waste in U.S. territories and possessions located outside of the customs territory of the U.S. to be disposed of in EPA-approved facilities on the mainland of the United States. Accordingly, the requirements of section 3(b) of Executive Order 13084 do not apply to this rule.

G. Executive Order 12898

Pursuant to Executive Order 12898, entitled *Federal Actions to Address Environmental Justice in Minority Populations and Low-Income Populations* (59 FR 7629, February 16, 1994), the Agency has considered environmental justice related issues with regard to the potential impacts of this action on the environmental and health conditions in low-income and minority communities. EPA finds that the amendments in this proposed rule will reduce the risk to human health and the environment from exposure to PCBs, particularly in low-income and minority communities. This proposed rule would allow PCB waste found in U.S. territories and possessions located outside of the customs territory of the U.S. to be disposed of in EPA-approved facilities on the mainland of the United States.

H. Executive Order 13045

Executive Order 13045, entitled *Protection of Children from Environmental Health Risks and Safety Risks* (62 FR 19885, April 23, 1997), does not apply to this rule, because it is not ''economically significant'' as defined under Executive Order 12866, and does not involve decisions on environmental health risks or safety risks that may disproportionately affect children. This proposed regulation would allow PCB waste in U.S. territories and possessions located outside of the customs territory of the U.S. to be disposed of in EPA-approved facilities on the mainland of the United States. Therefore, the disposal of PCB waste will occur where children are either not present or not permitted, and the disposal activity will pose no special risks to children. Also, the rule will prevent exposure of children in U.S. territories and possessions to PCBs that might result from improper storage or disposal of PCB waste.

I. National Technology Transfer and Advancement Act (NTTAA)

This regulatory action does not involve any technical standards that would require Agency consideration of voluntary consensus standards pursuant to section 12(d) of the National Technology Transfer and Advancement Act of 1995 (NTTAA), Public Law 104–113, section 12(d) (15 U.S.C. 272 note).

J. Executive Order 12630

EPA has complied with Executive Order 12630, entitled *Governmental Actions and Interference with Constitutionally Protected Property Rights* (53 FR 8859, March 15, 1988), by examining the takings implications of this rule in accordance with the ''Attorney General's Supplemental Guidelines for the Evaluation of Risk and Avoidance of Unanticipated Takings'' issued under the Executive Order.

K. Executive Order 12778

In issuing this rule, EPA has taken the necessary steps to eliminate drafting errors and ambiguity, minimize potential litigation, and provide a clear legal standard for affected conduct, as required by section 3 of Executive Order 12988, entitled *Civil Justice Reform* (61 FR 4729, February 7, 1996).

List of Subjects in 40 CFR Part 761

Environmental protection, Hazardous substances, Labeling, Polychlorinated Biphenyls (PCBs), Recordkeeping and reporting requirements.

Dated: October 24, 2000.

Carol M. Browner,

Administrator.

Therefore, 40 CFR chapter I, part 761 is proposed to be amended as follows:

PART 761—[AMENDED]

1. The authority citation for part 761 will continue to read as follows:

Authority: 15 U.S.C. 2605, 2607, 2611, 2614, and 2616.

2. Section 761.99 is amended by adding paragraph (c) to read as follows:

§761.99 Other transboundary shipments.

* * * * *

(c) PCB waste transported from any State to any other State for disposal, regardless of whether the waste enters or leaves the customs territory of the United States, provided that the PCB waste or the PCBs from which the waste was derived were present in the United States on January 1, 1979, and have remained within the United States since that date.

[FR Doc 00–27971 Filed 10–26–00; 4:34 p.m.]

BILLING CODE 6560–50–S

Federal Register

Wednesday,
November 1, 2000

Part IX

Department of Education

34 CFR Parts 600, 668, 675, and 690

Institutional Eligibility; Student Assistance General Provisions; Federal Work-Study Programs; and the Federal Pell Grant Program; Final Rule

DEPARTMENT OF EDUCATION

34 CFR Parts 600, 668, 675, and 690

RIN 1845–AA19

Institutional Eligibility; Student Assistance General Provisions; Federal Work-Study Programs; and the Federal Pell Grant Program

AGENCY: Office of Postsecondary Education, Department of Education.

ACTION: Final regulations.

SUMMARY: The Secretary amends the Institutional Eligibility, the Student Assistance General Provisions, the Federal Work-Study (FWS) Programs, and the Federal Pell Grant Program regulations. These final regulations implement changes negotiated under the negotiated rulemaking process mandated by Congress under section 492 of the Higher Education Act of 1965, as amended, (HEA). These changes streamline the application, reapplication, and certification processes for institutions that wish to participate in the title IV, HEA programs and provide simplification and flexibility in other provisions of the regulations that apply to the title IV HEA programs.

DATES: *Effective Date:* These regulations are effective July 1, 2001.

Implementation Date: The Secretary has determined, in accordance with section 482(c)(2)(A) of the HEA (20 U.S.C. 1089(c)(2)(A)), that institutions that administer title IV, HEA program funds may, at their discretion, choose to implement §§ 600.31, 668.5 and 675.19 on or after November 1, 2000. For further information see ''Implementation Date of These Regulations'' under the **SUPPLEMENTARY INFORMATION** section of this preamble.

FOR FURTHER INFORMATION CONTACT: Mark Washington, U.S. Department of Education, 400 Maryland Avenue, SW., Room 3045, ROB–3, Washington, DC 20202–5447. Telephone: (202) 260–9321.

If you use a telecommunications device for the deaf (TDD), you may call the Federal Information Relay Service (FIRS) at 1–800–877–8339.

Individuals with disabilities may obtain this document in an alternative format (*e.g.*, Braille, large print, audiotape, or computer diskette) on request to the contact person listed under **FOR FURTHER INFORMATION CONTACT.**

SUPPLEMENTARY INFORMATION: On August 10, 2000 the Secretary published a notice of proposed rulemaking (NPRM) for Institutional Eligibility, Student Assistance General Provisions, Federal Work-Study Programs (FWS), Federal Family Education Loan (FFEL) Program, William D. Ford Direct Loan (Direct Loan) Program; and the Federal Pell Grant Program, in the **Federal Register** (65 FR 49134).

In the preamble to the NPRM, the Secretary discussed on pages 49135 through 49147 the major changes proposed in that document. These included the following:

- Revising §§ 600.20 and 600.21, amending §§ 600.10 and 600.31, and removing §§ 600.9 and 600.30 to streamline the application, reapplication and certification processes for institutions that wish to participate in the title IV, HEA programs (pages 49149–49152).
- Revising § 600.31 to clarify the reporting responsibilities for institutions that undergo a change of ownership that results in change of control (pages 49151–49152).
- Revising § 668.5 to expand the possibilities for institutions to create written agreements with certain other entities to have part or all of their eligible programs provided by those entities (pages 49152–49153).
- Adding flexibility in § 668.13 to the training requirements for institutional certification (page 49153).
- Revising in § 668.19 the process for obtaining a transfer student's financial aid history (page 49153).
- Revising § 675.19 to permit additional certification and record retention options for FWS program administration (pages 49153–49154).
- Providing in §§ 682.604 and 685.301 additional flexibility in the loan disbursement rules for students enrolled in non-traditional programs (page 49154).
- Clarifying in § 668.165 the notification requirements when title IV loan proceeds are credited to a student's institutional account (page 49154).
- Adding flexibility in § 682.207 to lender disbursement requirements and eligibility determinations for students receiving loan proceeds under the FFEL Program (page 49154).

In these final regulations, we make two significant changes from the regulations that we proposed in the NPRM published on August 10, 2000. First, we will require all institutions to report to us of their intent to add a location offering 50 percent or more of an eligible program, regardless of the type of institution. A small number of institutions—those that meet one or more of the specified conditions discussed later in the analysis of comments—will have to await our approval of the new location before disbursing title IV, HEA program funds to students at that location. Other institutions must report to us their intent to add additional locations, but are not required to wait for our approval of those locations.

Second, public institutions must report changes in governance to us within 10 days of their occurrence.

The Secretary published an NPRM on July 27, 2000, for parts 682 and 685 in the **Federal Register** (65 FR 46316). In the preamble to that NPRM, the Secretary discussed (on pages 46317–46320) proposed changes to the FFEL and Direct Loan regulations. In order to consolidate the final regulations for the FFEL and Direct Loan programs into a single **Federal Register** publication, those proposed provisions of parts 682 and 685 that were published in the August 10, 2000 NPRM are now included as a part of the final regulations that respond to the July 27, 2000 NPRM. We strongly encourage the reader to refer to the preambles from both of the NPRMs for a full discussion of these regulations.

Implementation Date of These Regulations

Section 482(c) of the HEA requires that regulations affecting programs under title IV of the HEA be published in final form by November 1 prior to the start of the award year (which begins July 1) to which they apply. However, that section of the HEA also permits the Secretary to designate any regulation as one that an entity subject to the regulation may choose to implement earlier. If the Secretary designates a regulation for early implementation, he may specify when and under what conditions the entity may implement it. Under this authority, the Secretary has designated the following regulations for early implementation:

Section 600.31—Change of Ownership Resulting in a Change of Control for Private Nonprofit, Private For-Profit and Public Institutions

These regulations may be implemented upon publication of this final rule. This means that if an institution is subject to loss of eligibility due to a change in ownership that results in a change of control, it may ask the Secretary to permit it to continue to participate in the title IV, HEA programs on a provisional basis, provided that the institution submits a materially complete application.

This early implementation also changes the definition of ''ownership interests'' to exclude certain institutional investors, and clarifies when a shareholder would be deemed a

controlling shareholder for change of control issues.

Early implementation means that public institutions that experience a change in governance will not be considered to have undergone a change in ownership resulting in a change of control, but these institutions must report such changes within ten days of the occurrence.

Finally, early implementation means that the provisions that define more clearly ownership in a publicly-traded institution will be in effect.

Section 668.5—Written Arrangements To Provide Educational Programs

These regulations may be implemented by institutions upon publication of this final rule. This means that a school may use a single written arrangement with a study-abroad organization to represent agreements between the school and one or more foreign schools. Also, any of the eligible institutions that are parties to a written arrangement may make title IV calculations and disbursements and will not be considered third-party servicers.

Section 675.19—Fiscal Procedures and Records

These regulations may be implemented upon publication of this final rule. Institutions that administer the Federal Work-Study (FWS) Programs will now have the option to certify FWS timesheets in writing or electronically. If an institution elects to use an electronic certification option, it should be certain to use the appropriate safeguards, as outlined in the NPRM at page 49145.

Analysis of Comments and Changes

The regulations in this document were developed through the use of negotiated rulemaking. Section 492 of the HEA requires that, before publishing any proposed regulations to implement programs under title IV of the HEA, the Secretary obtain public involvement in the development of the proposed regulations. After obtaining advice and recommendations, the Secretary must conduct a negotiated rulemaking process to develop the proposed regulations.

These regulations were published in proposed form on August 10, 2000, following the completion of the negotiated rulemaking process. The Secretary invited comments on the proposed regulations that were due by September 25, 2000, and we received thirty-three comments.

An analysis of the comments we received and of the changes we made in the regulations since publication of the NPRM follows.

We group major issues according to subject. We discuss other substantive issues under the sections of the regulations to which they pertain. Generally, we do not address technical and other minor changes—and suggested changes the law does not authorize the Secretary to make.

Section 600.20—Application Procedures for Establishing, Reestablishing, Maintaining, or Expanding Institutional Eligibility and Certification

Applying for Additional Locations (Permanent and Temporary)

Comments: Many commenters supported exempting public institutions from applying for approval to add an additional location at which 50 percent or more of an eligible program will be offered, if the additional location is properly licensed and accredited, and located within the same state as the main campus. Commenters opined that the exemption is warranted because the Federal government's interests are generally protected by sufficient oversight and systems of control at public institutions. Additionally, most of these commenters believed that sufficient financial backing by those governing public entities, and monitoring by accrediting agencies are suitable to ensure the academic quality of the location and to protect students who rely upon title IV assistance.

One commenter believed the exemption is appropriate because public institutions that have added locations in the past have not placed Federal funds at risk.

Another commenter generally supported the proposed exemption, but believed that the exemption should apply to an additional location even if the location is not in the same state as the main campus. That commenter believed that the reasons given by the Department for the proposed exemption for public institutions (sufficient oversight and financial backing by a public entity) are valid, regardless of whether the additional location is located in the same state as the main campus.

Six commenters did not support requiring public institutions to report a new location. The commenters contended that, because we have virtually always approved additional locations for public institutions, required reporting would create unnecessary paperwork and a potential for delay. Some of the commenters also believed that the minimal risk represented by public institutions delivering title IV, HEA assistance made reporting unnecessary.

Another commenter supported requiring public institutions to inform us of a new location. That commenter felt that six years between recertification cycles for participation in the student aid programs is too long for locations to go unreported. The commenter believed that those entities charged with oversight will improve the quality of such oversight, by having an awareness of such locations. The commenter noted that these benefits appear to outweigh the minimal burden of reporting the locations.

Several commenters opposed our proposal exempting public institutions from applying for approval of an additional location. These commenters felt that treating public institutions differently from other institutions is unwarranted, and would give an unfair advantage to public institutions by eliminating potential delays. The commenters believed that one set of criteria should be developed for all institutions.

Two commenters felt that the unfair competitive advantage referred to above would not serve the needs of students nor the public interest, because it would not produce the best range of educational offerings or encourage the most efficient use of resources. Another commenter noted that in some highly competitive disciplines, such as computer science, information technology, and business administration or executive management, even a 35 day head start (our stated goal for the length of time within which we will process applications for approval) constitutes a significant advantage in terms of public relations and market share.

Three commenters believed that there are many poorly performing public institutions and that such an exemption would unnecessarily put taxpayer funds at risk. One of these commenters was specifically concerned that the proposed exemption for public institutions would permit higher-risk public institutions, such as those on provisional certification or the reimbursement payment method, to open new locations and disburse title IV aid without our approval. The commenter felt that this scenario would contradict the purpose of provisional certification and reimbursement, which is to permit us to more closely monitor higher-risk institutions. The commenter felt that it was arbitrary and capricious to allow such high-risk public institutions to open additional locations without our approval, while denying this benefit to non-public institutions with strong

records of administrative capability and regulatory compliance.

Another commenter stated that there was no publicly available evidence to support the contention that all public institutions provide better oversight and control, plan better, and have more fiscal resources than institutions in other sectors. The commenter was convinced that there is evidence to the contrary, such as the placement of public institutions on provisional certification, the failure of public institutions to meet their unique financial responsibility standards, and those public institutions with high student loan default rates.

Some commenters that did not support the exemption for public institutions suggested a number of general criteria that should be used in determining whether any institution qualifies for an exemption. One commenter suggested that the criteria should reward those institutions that have demonstrated appropriate administrative capability. Another commenter felt that the Federal interest in additional locations should focus on an institution's maintenance of quality in their educational programs. The commenter stated that we seemed to acknowledge that the quality of programs is the issue by our statement in the preamble to the NPRM that, ''some non-public institutions grew so rapidly that the integrity of their educational and student aid programs was compromised''.

Other commenters offered specific ideas about criteria that should be used to determine if any institution should be granted an exemption from reporting additional locations. One commenter suggested that an exemption should be given to an institution that: satisfies the criteria we proposed in § 600.20(d)(2) for temporary locations, is fully certified, meets the general standards of financial responsibility, has no late audits or significant audit findings in the last two years, has no significant program review liabilities, and was not subject to a limitation, suspension, or termination action within the last three years. Another commenter generally agreed with the suggested criteria but instead of supporting the proposed criteria in § 600.20(d)(2), suggested the following criteria: the institution has full regional or national accreditation, would not be subject to a loss of eligibility under § 668.188 if it adds a new location, and has not added more than 10 locations at which it offered 50 percent or more of an educational program since it was last certified to participate in the title IV programs. The commenter also believed that to qualify for an exemption, an institution should have no late audits or significant audit findings in the last five years and never have been subject to a program review liability.

Another commenter believed that it is appropriate for us to learn about temporary locations that have been opened through annual compliance audits. The commenter did not feel that a separate notification would be needed.

However, another commenter representing the largest professional association of certified public accountants disagreed. In particular, the commenter stated that we should require institutions to submit information on temporary locations directly to us. The commenter noted that if we want independent third-party assurances on an institution's management's assertions regarding the institution's compliance with such a requirement, compliance objectives and associated auditor reporting could be developed as part of the annual compliance audit.

One commenter supported the provision that would exempt a non-public institution from applying for approval of licensed and accredited temporary locations if it met the proposed criteria, including the limitation on adding no more than six locations offering 50 percent or more of a program since it was last certified. Another commenter felt that it is more appropriate to focus on the number of such locations established in a short period of time rather than over the entire certification period. The commenter recommended that no more than two such locations should be added during any 12-month period, and that for any more locations an institution should be required to obtain our approval prior to disbursing any title IV funds to students attending those locations.

Another commenter suggested that the criteria for exemption of temporary locations should include a certification from the institution's Chief Executive Officer that the institution currently meets all applicable federal requirements regarding financial and administrative capability (based on the institution's most recent audited financial statement and compliance audit, recent regulatory reviews, and program participation agreement). The commenter believed that no more title IV funds should be disbursed to students at a temporary location after the end of the first year, until we have approved the location, unless the institution submitted a materially complete application for our approval at least 35 days before the end of the period.

The commenter also felt that the proposed requirement that the institution must not have acquired the assets of another institution that formerly provided programs at that site was stated in an overly broad manner. Instead, the commenter recommended that the institution must not have acquired a substantial amount of the assets of another institution that formerly provided programs at that site within the past 12 months. The commenter believed that this would address significant, recent acquisitions or transfers of assets that we need to be aware of without providing for unnecessary scrutiny of insignificant transactions that do not pose concern.

Finally, one commenter noted inconsistencies between the proposed regulatory language for § 600.20(d)(2)(ii) (which refers to locations at which more than 50 percent of a program is added) and the description of the proposed provision (which refers to locations as ''offering at least 50 percent of an educational program'' in one place and ''offered more than 50 percent of an educational program'' in another). The commenter believed that the correct wording is ''at least 50 percent''.

Discussion: We appreciate the careful analysis and consideration given to these issues by the commenters. With regard to the last comment, the commenter is correct that we inadvertently used imprecise language in describing the requirement when we published the NPRM. The correct term, and the one used in the regulations is ''50 percent or more''.

We carefully considered the comments received on both the proposal to exempt public institutions from applying for approval of an additional location where the institution will offer 50 percent or more of an eligible program, and the proposal to exempt all institutions from the requirement to apply for approval of an additional location if it will be in operation for less than 12 months.

We agree that the approach to additional locations in the NPRM had the potential to bar some high performing, non-public institutions from the benefits and incentives we desire to make available to those who administer our programs properly.

We stated in the NPRM our belief that the proposed regulations would enhance efficiency and provide administrative relief for a sizable segment of the population of eligible institutions, by not requiring them to report locations they add until the next scheduled recertification. Upon

consideration of the comments, we believe there is an opportunity to meet that objective in a manner that may benefit more schools than we initially anticipated. This is possible if we focus on reviewing and approving those institutions that give us clear reasons for special attention, while allowing others that demonstrate good compliance and stability to merely report to us of their actions. Thus, we can preserve our desire to provide regulatory and administrative relief where merited by compliance and performance. This flexibility is supported by a set of standards that identifies those schools that we should review before approving their ability to disburse title IV, HEA funds at a new location, regardless of the type of institution.

Based upon the comments received on these issues and our plans to improve the efficiency of the reporting process, we are persuaded that it is prudent and not particularly burdensome, to require all institutions report to us if they wish to disburse title IV, HEA program funds to students enrolled at a new additional location, at which 50 percent or more of an eligible program will be offered.

For the purposes of these regulations, reporting consists of submitting an electronic application which provides specific information and required supporting documentation regarding the new location.

While all institutions must report their new locations, only those that meet certain criteria are required to wait for our approval before disbursing title IV, HEA program funds to eligible students at those locations. A full explanation of those criteria follows later in this discussion. For the purposes of these regulations, approval consists of the Secretary's written response to an application, granting specific permission to an institution to disburse funds to students enrolled at the specified location. If an institution is not required to wait for our approval, it must simply report to us through the electronic application process prior to disbursing title IV, HEA program funds.

These provisions replace the proposed across-the-board exemption from reporting or approval for public institutions and the exemption for temporary locations included in the NPRM.

Under these new provisions, no distinction is made between temporary and permanent locations. All institutions are required to report to us any new location where 50 percent or more of an eligible program is offered. The report must include supporting documentation and be provided before the institution disburses title IV, HEA funds to students at that location. Those institutions that are only required to report to us before they disburse federal student aid need not wait for our approval. However, those institutions that meet any of the criteria discussed below must report to us and then wait for our approval before they can disburse title IV, HEA program funds to eligible students at the new location.

We will only require an institution to apply and wait for our approval to disburse title IV, HEA program funds at locations where they offer 50 percent or more of an eligible location if the institution: (1) Is provisionally certified, (2) is on the reimbursement or cash monitoring system of payment, (3) has acquired the assets of another institution that provided educational programs at that location during the preceding year, and the other institution participated in the title IV, HEA programs during that year, (4) would be subject to a loss of eligibility under the cohort default rate regulations at § 688.188 if it adds that location, or if (5) the Secretary previously prohibited it from disbursing title IV, HEA program funds to students enrolled at an additional location before the Secretary notifies it that the location is eligible to participate in the title IV, HEA programs.

Under the last criteria we may preclude an institution from adding locations due to financial, administrative, compliance or other concerns about an institution. In this case, the institution will receive a written notice that sets out the reason it will be required to apply for approval for additional locations. The institution may request reconsideration of that decision if it shows there are material errors in the facts we considered in making our determination.

With regard to the criteria related to provisional certification, the Secretary plans to publish a change to the provision in 34 CFR 668.16(m) that relates to placing an institution on provisional certification if it has a cohort default rate in the FFEL and/or Direct Loan programs of 25 percent or greater. That change will provide more flexibility to the Secretary in choosing whether or not to place such an institution on provisional certification.

We believe that many more institutions will benefit from the provision that they must only report to us and not await our approval, since it allows them to begin disbursing aid at these new locations immediately upon their reporting to us. We anticipate the number of institutions that qualify for this flexibility will be much greater than the number of institutions that will be required to await our approval before disbursing title IV, HEA program funds to eligible students at those locations. Also, the minimal reporting burden required of an institution enables us to maintain accurate and updated records of all locations where students who are receiving title IV, HEA funds are enrolled.

Institutions are responsible for knowing whether they need to obtain our approval to disburse title IV, HEA program funds to eligible students at the new location. If an institution is unsure whether it meets the criteria requiring it to wait for our approval, it may contact us for specific guidance. Institutions that add locations without obtaining our approval when they knew, or should have known, that they were required to wait may be subject to administrative repayments and other sanctions.

Changes: We are revising § 600.20(c) to eliminate the exemptions for public institutions and for temporary additional locations that were proposed in § 600.20(d) of the NPRM and any related references to those exemptions. Under § 600.21(a)(3), all institutions are required to report to us if they wish to add an additional location where they offer or will offer 50 percent or more of an eligible program. Section 600.20(c) provides that an institution must apply to us for approval if it has added an additional location and must await the Secretary's approval before disbursing title IV, HEA program funds at that location if it meets one or more of the conditions described above and included in the regulation at § 600.20(c)(1)(i)–(v).

Comments: One commenter, in focusing on the Secretary's possible responses to an application as proposed in § 600.20(f)—§ 600.20(e) in these final rules —, asked us to clarify the difference between a ''program in which it is eligible to participate'' versus ''programs in which it is eligible to apply for funds'' in § 600.20(f)(2) —§ 600.20(e)(2) in these final rules —. The commenter also asked for clarification of the reference to a branch campus in § 600.20(f)(4)–§ 600.20(e)(6) in these final rules.

Discussion: Section 600.20(e)(2) reflects the current regulations at § 600.21(a), which identifies the conditions and applications to which the Secretary will respond. Section 600.20(e)(2)(i) states that the Secretary will notify an institution whether it is eligible to participate in the title IV, HEA programs. Section 600.20(e)(2)(ii) states that the notification will enumerate the specific title IV, student aid programs in which the institution is

eligible to participate. Section 600.20(e)(2)(iii) states that the Secretary notifies the institution of the specific title IV, student aid programs for which the institution must submit an additional application to receive funding. For example, the campus-based programs require submission of an annual application (FISAP) before funds are allocated to an institution.

Notices sent according to § 600.20(e)(2)(iv) and 600.20(e)(2)(v) will indicate the effective dates of eligibility, and any conditions, related to that eligibility respectively.

We agree with the commenter that § 600.20(f)(4) in the NPRM does not provide a reference to § 600.20(c)(4) and (5). We will make the necessary corrections.

Changes: Section 600.20(e) has been revised to identify how the Secretary responds to applications for branch campuses.

Section 600.31—Change in Ownership Resulting in a Change in Control for Private Nonprofit and Private For-Profit Institutions

Publicly-Traded Corporations

Comments: A commenter recommended that we include a succinct definition of the term ''institutional investor'' that specifically mentions the following types of investors: investment companies, registered investment advisors, business development companies, employee benefit plans, banks, insurance companies, pension funds, and securities dealers.

Discussion: We agree that our definition of the term ''institutional investor'' should be clarified. However, we find that definitions of this industry term are often more descriptive of entities to be included, rather than exhaustive of the characteristics of such entities. Therefore, we defer to the Securities and Exchange Commission's (SEC) regulatory definition of a U.S. institutional investor, with which publicly-traded corporations and most investors can be expected to be familiar.

Changes: We have added a cross-reference from the SEC regulations in 17 CFR 240.15a–6(b)(7) to the reference ''U.S. institutional investor'' in the definitions at § 600.31(b)(2)(ii) and 600.31(c)(2)(ii)(A). Although illustrative of the entities that will be considered institutional investors under this regulation, the reference is not intended to be exhaustive.

Comments: One commenter felt that the proposed definition of a ''controlling shareholder'' equates ''voting stock'' with ''shares''. The commenter noted that voting stock is not always equivalent to the number of shares of stock an individual may own in a corporation, as in the case where non-voting stock has been issued. The commenter believed that if this definition is based on other regulatory provisions that raise the same issue, we should address all occurrences of this in the final regulations.

Another commenter suggested clarifying in proposed § 600.31(c)(2)(ii)(A) that the controlling shareholder be determined through measuring only the voting stock, by adding the phrase ''of the voting stock'' after the word ''shares'' to read: ''A controlling shareholder is a shareholder who holds or controls through agreement both 25 percent or more of the total outstanding voting stock of the corporation and more shares of the voting stock than any other shareholder.''

Discussion: We agree that the term ''share'' is not synonymous with actual voting stock. The integral element of this topic relates to a shareholder's ability to significantly impact or control the actions of a corporation, or its management. Thus, we agree that revising the regulation to focus on ownership and control of voting stock is appropriate.

Changes: Section 600.31(c)(2)(ii)(A) has been changed to add the words ''of voting stock'' after the word ''shares'', signaling that the regulation applies to stock that contains voting privileges.

Comments: A commenter believed that the proposed wording used to describe who is not a controlling shareholder in § 600.31(c)(2)(ii)(A) should be modified. The commenter suggested that the regulation should exclude from consideration all shares held in the categories listed, rather than only excluding such stock if it represents the individual's sole holdings in that corporation. The commenter recommended revising the third sentence to exclude all of the shares held in the excluded capacities in determining whether the shareholder is a controlling shareholder to read: ''Any shares of the corporation's voting stock held by a shareholder (1) as an institutional investor, (2) in mutual funds, (3) through a profit-sharing plan or (4) in an Employee Stock Ownership Plan (ESOP) are excluded for purposes of determining whether the shareholder is a controlling shareholder.''

Discussion: We disagree. When identifying those shareholders whose ability to influence a corporation's management of student assistance merits scrutiny, we believe that it is reasonable to exclude large, institutional investors whose only investment with a specific corporation exists solely for the investment value. We consider these investors generally to have investment objectives that differ from other investors who take a controlling position in a corporation. The objectives of the institutional investor normally prompt a lesser interest in influencing management policies that may affect the administration of student assistance than those of other controlling shareholders. It is reasonable to infer that a shareholder who acquires control of the voting rights of stock held by others who qualify as institutional investors does not show this same lack of interest in those management policies.

Therefore, a person who controls 25 percent or more of the outstanding voting stock of a company and more stock than any other person by a combination of personal investment ownership and representation of institutional investors uniquely classifies one as a controlling shareholder, who can reasonably be expected to exercise real influence over management and its policies. The effect of this kind of shareholder's control on the corporation deserves the same scrutiny as that of any other shareholder who can control corporate policies.

Thus, to determine whether a shareholder is a controlling shareholder under the bright-line test, the rule counts all voting stock held or controlled by a shareholder, unless all stock held by that shareholder is held as an institutional investor.

Changes: None.

Comments: One commenter disagreed with our proposal to suspend eligibility by defining a change of ownership resulting in a change of control to occur when a stockholder's ownership share crosses what he believed to be an arbitrary ''bright line''. He thought it was unfair to define a decrease in stock ownership by a controlling shareholder in a way that caused the negative result of suspending an institution's eligibility until a new application has been reviewed and approved. The commenter noted that, while the SEC and GAAP may require certain reporting activities for certain events, they do not cause immediate suspension of business activities or licenses. The commenter recommended that eligibility should be continued if financial responsibility and administrative capability has already been demonstrated and has not been downgraded by the ownership change. The commenter felt that the 25 percent threshold is arbitrary. The commenter contended that, while 25 percent may be a large enough percentage of stock to allow an individual to influence a corporation, more than 50 percent of the

stock must be owned for an individual to have control of the corporation. The commenter also noted that control does not necessarily change with purchase or sale of stock. He stated that control is exercised by a corporation's Board of Directors, which does not automatically change with purchase and sale of stock. He felt that any review or suspension of an institution's eligibility should be predicated on a precipitous change in Directors, not stock ownership.

Discussion: We disagree with the commenter's notion that the use of a clear threshold in determining ownership and control is unfair or arbitrary. Quite the contrary, we sought to avoid such treatment by referencing established standards and guidelines of the accounting industry, which are accepted and adopted by most publicly-traded corporations.

Since most financial transactions are accounted for in accordance with the established system of accounting principles, we patterned our ''bright line'' threshold directly after Accounting Principles Board Opinion No. 18, which defines for GAAP purposes the percentage of ownership that can reasonably be presumed to give an investor the ability to exercise significant influence over an investee.

GAAP provides that control of 20 percent of the voting stock of a corporation raises a rebuttable presumption of control of the corporation and conversely, that control of a smaller percentage of a corporation's stock raises a rebuttable presumption that the holder lacks control. We chose that adoption of an irrebutable ''bright line'' test was desirable both to allow institutions to plan their financial affairs with greater predictability, and to eliminate the burden of our examining the circumstances surrounding each significant diminution in ownership interest of an institution owned by a publicly-traded corporation. We believe that a higher threshold than 20 percent should be used in return for adoption of a ''bright line'' standard. The choice of 25 percent as the threshold is not compelled by statute or regulation, but is a reasonable choice. We therefore choose to retain 25 percent as the ''bright line'' measure of control.

We also disagree that while 25 percent ownership of stock may be influential, 50 percent is required to control an entity. For publicly-traded corporations, the opposite inference is compelling: The more widely held the stock of a corporation, the smaller the percentage of its stock that need be controlled by a person in order to allow that person to ''direct or cause the direction of the management and policies'' of the corporation (see, § 600.31(b) definition of ''control''). The investing public and the accounting profession recognize that a shareholder can control a corporation while owning or controlling far less than 50 percent of its stock. There is no reason that we should ignore that same conclusion.

Finally, the position that eligibility and certification lapse upon a change in ownership that results in a change in control is not a position that we arbitrarily adopted, but is required by the HEA. Section 498(i) mandates that eligibility must be reestablished after a change in ownership resulting in a change in control, and that the transfer of the controlling interest of stock of the institution is an action that results in such a change in control.

Changes: None.

Comments: Another commenter supported adding specific references to ''private nonprofit and private for-profit institutions''. The commenter believed that these terms help nonprofit institutions recognize that certain change of ownership provisions apply to them, because the words ''change of ownership'' could suggest applicability only to the for-profit sector. The commenter did not feel that the proposed changes to § 600.31(c)(7) are an appropriate recognition of differences among the sectors in postsecondary education, and believes that the change of ownership regulations for independent nonprofit institutions should be reconsidered in negotiated rulemaking in the near future. The commenter believed that some mergers between institutions should be allowed without triggering a change of ownership resulting in a change of control, such as the merger of two independent nonprofit institutions, both of which are participating in good standing in the title IV programs. The commenter believed that such a merger could serve the best interest of students and society by allowing distinctive educational programs to continue to be available to students, supported by the stronger financial and administrative base of the merged institution.

Discussion: We believe Congress considered similar arguments when it deliberated the latest reauthorization of the HEA. While the specific terminology suggested by the commenter may not appear in the statute, the very example that the commenter provides regarding a merger between institutions is specifically addressed in section 498(i)(2)(C) of the HEA. We considered suggestions that we should implement certain labels to clarify the full extent and application of this section to all institutions, regardless of unique sectors. Thus we included the terms ''private nonprofit'' and ''private for-profit'' as descriptive modifiers where appropriate. We disagree with the notion that certain entities are disadvantaged by general labels or the lack of more specific ones.

Changes: None.

Public Institutions

Comments: Nine commenters supported the proposed provision that does not regard a change in governance at a public institution as a change in ownership, if the institution's new governing body is in the same State included in the institution's program participation agreement and the new governing body has acknowledged the institution's responsibilities under its program participation agreement. The commenters felt this exemption was appropriate for the same reasons that some commenters supported exempting public institutions from applying for our approval of an additional location: sufficient oversight and systems of control by governing public entities, sufficient financial backing of the governing public entity, and monitoring by the institution's accrediting agency to ensure that the Federal government's interests are protected.

One commenter supported the provision that would provide that a change in governance at a public institution is not a change in ownership. Additionally, the commenter did not believe that it was necessary to limit this to changes in governance in the same state included in the program participation agreement. The commenter felt that the same assurances associated with the fact that public oversight of the institution exists would also apply in the rare instance that the governance of a public institution switched from one state to another. The commenter also did not believe that it would be necessary to require the new governing authority to acknowledge the institution's responsibilities under its program participation agreement. The commenter noted that the institution remains the same institution and, therefore, retains the responsibilities it acquired by signing its program participation agreement.

Five commenters did not believe that a particular form of acknowledgement should be required for institutions that must acknowledge their continuing responsibilities under the program participation agreement because the formal transfer of governing authority might not include such an acknowledgement. These commenters felt it would be more useful for

institutions to tailor their acknowledgement to reflect the specific circumstances of the transfer of governance. One commenter felt that a letter or statement from the institutional authority would be sufficient.

Three commenters did not support the proposed provision allowing a change in governance at a public institution to not be considered a change in ownership if the institution's new governing body is in the same State. The commenters contended that there are several circumstances where a public institution should be considered to have had a change in ownership.

The commenters also believed that a change in ownership has occurred when a public institution is transferred from control from a higher level of governmental authority (such as a State) to a lower one (such as a county) which may not have the same level of resources to commit to the institution. One commenter believed that in such a case there was no guarantee of continuing operational effectiveness. The commenter felt that such an exemption for all public schools would put taxpayers' funds at risk. Two of the commenters believed that, at the very least, the institution should be required to inform us of the change so that we can determine whether it meets the requirements for the exemption.

One commenter felt that new types of ''quasi public'' institutions, such as charter colleges are not likely to have the same level of oversight and financial stability as a traditional public institution, and should not be given broad regulatory exemptions. The commenter also felt that we should retain an interest in approving a change in which an institution, for the first time, will be administering the Federal financial aid programs. The commenter gave an example of several two-year colleges in a state that have been managed by four-year institutions, but may be given autonomy to operate (and presumably, participate in the title IV, HEA programs) on their own. The commenter concluded by noting that all of the public institutions in that state may have their state funding tied to meeting specific performance goals.

Discussion: We explained in the NPRM and in the earlier discussion related to additional locations that there has been a consistent history of stability, compliance and accountability in the operation of public institutions that supports the proposal to exempt certain governance changes within the State from being considered changes of ownership resulting in changes of control. Moreover, this level of accountability has been present at every level of government that operates public institutions. For that reason, we are not persuaded that the level of oversight or the systems of control that monitor the performance of these institutions will change drastically because of a transfer in control between governing public entities within a State.

We are not persuaded to extend the scope of the proposal to permit a public institution in one State to acquire a public institution in another State without having that change considered a change of ownership resulting in a change in control, and thus requiring the institution to apply for approval of a change of ownership. In such an instance, the ownership and control of the institution would be changing from one State to another, so that an entirely different public constituency would be assuming responsibility for the institution. This type of structure would also raise questions about State licensing, since the public institution owned by one State would be operating under the State licensing requirements of a different State. We have considered the suggestions from commenters that public institutions should be required to report to us when a change of governance takes place even if that change is not considered a change in ownership resulting in a change in control, and we agree. Such information will permit us to examine the transaction to ensure that it meets the definitional requirements and to determine if there are any other issues involving the institution warranting further action.

We agree with the comments that cautioned against exempting changes of governance at a public institution that is transferred to a ''quasi public'' entity such as a charter college or other hybrid entity. As we stated in the NPRM, the provision does not apply if a change in governance involves a hybrid entity, such as a corporation with limited liability, public-private partnerships, or joint ownership with out-of-State entities.

Changes: Section 600.21(a)(9) has been added to require public institutions to report to us within 10 days of when they experience a change in governance.

Comments: A commenter asked us to clarify the manner in which the institution's continuing responsibilities must be acknowledged. The commenter noted that in the preamble to the NPRM (page 49141), we stated that the acknowledgment must be written and must be a part of the documents that transfer control to the new governing body. The commenter felt that the next sentence confuses the meaning of the previous sentence by stating that the written acknowledgment, if not included in the documents transferring control, can be submitted separately to us. The commenter believed that we intended to say that notification without acknowledgment suffices if that acknowledgment is included in the official transfer documents; otherwise, notification of the change (not simply acknowledgement of its official records) is required.

Discussion: As explained above, the regulation is being changed to require public institutions to report to us within 10 days of undergoing a change in governance. If documentation transferring the governance from one public entity to another within the State explicitly acknowledges the institution's continuing responsibilities under its Program Participation Agreement, that documentation is sufficient, and no additional acknowledgment must be provided in the notice, or separately. Such an acknowledgment may be based on the circumstances of the transfer, and simply included in the official transfer documentation. If the documentation transferring control of the public institution to another in-State public entity does not acknowledge the institution's continuing responsibilities under its Program Participation Agreement, the institution must acknowledge its continuing responsibilities by separate letter or in the notice advising us of the change in governance.

Changes: None.

Section 668.5—Written Arrangements To Provide Educational Programs

Comments: One commenter from a public institution noted that the proposed flexibilities that would extend to institutions participating in study-abroad programs would eliminate many current deterrents for students trying to gain access to aid for those programs. He believed that the existing guidance regarding contractual and consortium agreements often causes confusion. The commenter stated that the proposed regulation would clarify the required procedures and effectively minimize such confusion. The commenter noted the clarification the proposed regulation makes by defining third-party providers and study-abroad organizations as appropriate constituent groups in study-abroad programs.

Another commenter representing a large, private university supported the proposed revisions, and expected a significant reduction in the administrative burden experienced, as schools currently must obtain and maintain separate agreements with each

foreign institution that its students are attending. The commenter believed that the ability to make agreements with study-abroad organizations will enhance the quality and consistency of information shared between home and host institutions, and will likely create more expedient delivery of the title IV, HEA program funds to students in these programs.

Discussion: We appreciate the positive responses to this proposal. We anticipate that these regulations will make it substantially easier for students to receive financial aid while enrolled in eligible domestic programs away from their home institutions. We believe that the ability for either home or host institutions to pay the student's title IV, HEA program funds is a significant feature that will enhance and expand diverse learning opportunities.

Changes: None.

Section 668.13—Certification Procedures

Comments: One commenter agreed with our proposal to permit the chief executive of an institution to designate another executive level officer to serve as an alternate for certification training purposes. The commenter also thought it made sense not to require schools to attend training when a participating institution was merely adding a new title IV, HEA program.

Discussion: We believe that all eligible, participating institutions should receive basic training about the federal regulations and procedural requirements that pertain to administering the title IV, HEA programs. We want to assure students and taxpayers that they can expect an accurate application of the program requirements and a consistent level of proficiency on the part of the institutions we authorize to deliver title IV assistance.

We regularly review the training requirements to ensure that relevance, accuracy, and practicality are reflected in the subject matter. We also seek to continually simplify the training requirements without diluting the core content, to encourage institutions to make use of these resources when assessing and maintaining the technical readiness of their staffs.

Changes: None.

Section 668.19—Financial Aid History

Comments: Several commenters supported the proposal to eliminate the paper financial aid transcript (FAT) requirements for all transfer students in favor of a process under which the National Student Loan Data System (NSLDS) provides financial aid history information about current-year transfer students directly to schools that need it for one or more of their transfer students.

Discussion: We appreciate the support of the commenters.

Changes: None.

Comments: One commenter asked whether the school or the student is liable for an overpayment of title IV aid based on the financial aid history information the school receives from NSLDS after the seven day timeframe.

Discussion: Once a school receives information that limits a student's eligibility, it may not disburse additional title IV, HEA aid to that student until the problem is revolved. As currently provided in Dear Colleague Letter GEN–96–13, a school that follows the procedures in obtaining financial aid history information from NSLDS may rely on that information in making eligibility and award determinations. The school is not liable for any overpayments. The same is true under this rule. A school that notifies NSLDS and either waits seven days or checks NSLDS on-line before it disburses title IV, HEA program funds is not liable for any overpayments based on information it receives from NSLDS at a later date.

However, a student may be liable for any overpayment that is the result of information the school receives after it follows the procedures in these rules. This concept is explained more fully in Dear Colleague Letter GEN–96–13.

Changes: None.

Comments: One commenter suggested that the Secretary designate this regulation as one that a school may implement as soon as it is published as a final rule instead of waiting until it normally takes effect on July 1, 2001.

Discussion: We are currently discussing with schools and other partners various administrative approaches that could be used to implement this rule. After we complete those discussions, system improvements and enhancements need to be made to NSLDS before schools can use it for this purpose. Therefore, it is unlikely that we will have the systems support needed to implement the new provisions before July 1, 2001.

Changes: None.

Comments: One commenter stated that the NSLDS information on an Institutional Student Information Record (ISIR) should be current with all financial aid transactions contained in NSLDS. This case requires no distinction between current-year and prior-year transfer students with respect to the ISIR information a school uses to make eligibility and award determinations. The commenter further stated that if the information on an ISIR is not the same as that in NSLDS, as implied in the preamble discussion, we should provide current NSLDS information to schools via the ISIR process.

Discussion: The financial aid history information on an ISIR reflects NSLDS information as of the date that the ISIR is created. Currently, an ISIR is not updated solely to reflect disbursements of title IV aid that are reported by an NSLDS data provider. This is because, under such a process, every school that a student listed on the FAFSA would be required to receive an updated ISIR every time new disbursements were reported to NSLDS, including the school that reported those disbursements. Certainly, there is no benefit in providing to schools, at considerable costs to the taxpayers and institutions, millions of updated ISIR records that contain information they do not need.

On the other hand, we agree with the commenter's general view that there should be a single process under which a school receives updated financial aid history information for all transfer students. However, in many cases (particularly for prior-year transfer students) the updated information will not affect those students' current year eligibility or award amounts. Moreover, currently we have no way of determining which school a transfer student is attending until after NSLDS receives disbursement information identifying that school.

For these reasons, we proposed a targeted approach under which a school would inform NSLDS of the transfer students that are attending (or planning to attend) their school and NSLDS would provide, directly to that school, updated information about those students. Although these rules apply only to current-year transfer students, a school may use the new NSLDS process to receive updated information for any transfer student.

Changes: None.

Section 668.165—Notices and Authorizations

Comments: Two commenters representing a large coalition in the higher education community stated that requiring confirmation and retention of electronic notices is counter-productive, and diminishing to the efficiencies inherent in constantly advancing technologies. By comparison they noted that we do not require similar tracking and confirmation of receipt for mail sent via the U.S. Postal Service (USPS).

Discussion: After many discussions regarding the practical complications of documenting receipt of electronic mail,

we agree that some schools may experience an impractical, although unintended, burden to maintain copies of the student's or parent's confirmation of a disbursement notice. Given the range and diversity of capabilities in various e-mail and other electronic applications, we believe that institutions should determine the best way for them to confirm that a student or parent received an electronic notice. Thus, the language in the NPRM, and in the final rule, allows electronic notices, while only requiring that institutions confirm that those notices reached the intended parties.

We noted in the NPRM that we support the presumption recognized in the law that mail deposited with the USPS is delivered. Certainly, there are documented cases where this presumption fails because of the potential for error that accompanies any system dependent upon human interaction. However, we see the differences between an established, federally supported, national delivery system and an electronic delivery method that operates independently and through many different private software providers without a uniform standard, as very significant.

The USPS has several proven methods and systems that it may use to track mail deposited in its system. It also utilizes uniform automated systems that process mail throughout the nation. The USPS also sets coherent operating standards and employs a system of quality assurance to monitor the application and effectiveness of those standards.

On the contrary, both the software applications and the hardware upon which they operate generally limit e-mail capabilities. There are no observed standards or mandated features inherent in all e-mail software applications that provide the quality assurance or maintain a similar level of consistency that parallels that of the USPS.

Changes: None.

Section 675.19—Fiscal Procedures and Records

Comments: One commenter strongly supported our proposal to allow electronic certification of Federal Work-Study (FWS) timesheets. The commenter believed that this option alleviates some of the inconvenience of loss, damage, forgery and other complications that may occur when using paper certifications. The commenter also felt that the proposed regulations will enhance the timeliness of the delivery of FWS funds, and will improve the security and retention of the related records.

Another commenter was also supportive of our proposal to allow electronic certification by a supervisor to approve FWS hours recorded on a student's time record. The commenter noted that many of the departments at her school have several hundred employees each. Accordingly, the commenter was aware that several of these departments have implemented electronic timekeeping systems, which have vastly improved the accuracy of the timekeeping function for such a large number of employees. The commenter also felt that being able to move the FWS payroll employees to a more technologically advanced system would be less burdensome, and would avoid having to keep a separate time system for FWS students. The commenter believed that these regulations would improve the utilization of FWS in both on-campus jobs and increasingly, in off-campus employment.

Discussion: We appreciate the support for these regulations. Just as we do with manual certification systems, we continue to urge institutions to assess the adequacy of their systems and internal controls, to assure that reasonable safeguards exist to secure certifications that will be completed electronically.

We refer those who administer the FWS Program to page 49145 of the August 10, 2000 NPRM for a full discussion of the safeguards we expect schools to include in any electronic certification process they implement.

Changes: None.

Executive Order 12866

We have reviewed these final regulations in accordance with Executive Order 12866. Under the terms of the order we have assessed the potential costs and benefits of this regulatory action.

The potential costs associated with the final regulations are those resulting from statutory requirements and those we have determined to be necessary for administering these programs effectively and efficiently.

In assessing the potential costs and benefits—both quantitative and qualitative—of these final regulations, we have determined that the benefits of the regulations justify the costs.

We have also determined that this regulatory action does not unduly interfere with state, local, and tribal governments in the exercise of their governmental functions.

We discussed the potential costs and benefits of these final regulations in the preamble to the NPRM under Executive Order 12866 (see page 49147 of the NPRM) Potential Costs and Benefits.

Paperwork Reduction Act of 1995

The Paperwork Reduction Act of 1995 does not require you to respond to a collection of information unless it displays a valid Office of Management and Budget (OMB) control number. We display the valid OMB control numbers assigned to the collections of information in these final regulations at the end of the affected sections of the regulations.

Assessment of Educational Impact

In the NPRM we requested comments on whether the proposed regulations would require transmission of information that any other agency or authority of the United States gathers or makes available.

Based on the response to the NPRM and on our review, we have determined that these final regulations do not require transmission of information that any other agency or authority of the United States gathers or makes available.

Electronic Access to This Document

You may view this document, as well as all other Department of Education documents published in the **Federal Register**, in text or Adobe Portable Document Format (PDF) on the Internet at either of the following sites:

http://ocfo.ed.gov/fedreg.htm

http://ifap.ed.gov/csb_html/fedlreg.htm

To use PDF you must have Adobe Acrobat Reader, which is available free at either of the previous sites. If you have questions about using PDF, call the U.S. Government Printing Office (GPO), toll free, at 1–888–293–6498; or in the Washington, D.C., area at (202) 512–1530.

Note: The official version of this document is the document published in the **Federal Register**. Free Internet access to the official edition of the **Federal Register** and the Code of Federal Regulations is available on GPO Access at: http://www.access.gpo.gov/nara/index.html

(Catalog of Federal Domestic Assistance Number: 84.033 Federal Work-Study Program; 84.063 Federal Pell Grant Program)

List of Subjects

34 CFR Part 600

Administrative practice and procedure, Colleges and universities, Consumer protection, Grant programs-education, Reporting and recordkeeping requirements, Student aid.

34 CFR Part 668

Administrative practice and procedure, Colleges and universities, Consumer protection, Grant programs—education, Loan programs—education, Reporting and recordkeeping requirements, Student aid.

34 CFR Part 675

Colleges and universities, Employment, Grant programs—education, Reporting and recordkeeping requirements, Student aid.

34 CFR Part 690

Grant programs—education, Reporting and recordkeeping requirements, Student aid.

Dated: October 25, 2000.

Richard W. Riley,

Secretary of Education.

For the reasons stated in the preamble, the Secretary amends title 34 of the Code of Federal Regulations by amending parts 600, 668, 675, and 690 as follows:

PART 600—INSTITUTIONAL ELIGIBILITY UNDER THE HIGHER EDUCATION ACT OF 1965, AS AMENDED

1. The authority citation for part 600 continues to read as follows:

Authority: 20 U.S.C. 1001, 1002, 1003, 1088, 1091, 1094, 1099b, and 1099c, unless otherwise noted.

§§ 600.9 and 600.30 [Removed and reserved]

2. Sections 600.9 and 600.30 are removed and reserved.

3. Section 600.10 is amended by removing and reserving paragraph (a)(2) and by revising paragraphs (b)(3)(i) and (b)(3)(ii) to read as follows:

§ 600.10 Date, extent, duration, and consequence of eligibility.

* * * * *

(b) * * *

(3) * * *

(i) The Secretary approves that location under § 600.20(e)(4); or

(ii) The location is licensed and accredited, the institution does not have to apply to the Secretary for approval of that location under § 600.20(c), and the institution has reported to the Secretary that location under § 600.21.

(Approved by Office of Management and Budget under control number 1845–0098)

4. Section 600.20 is revised to read as follows:

§ 600.20 Application procedures for establishing, reestablishing, maintaining, or expanding institutional eligibility and certification.

(a) *Initial eligibility application.* An institution that wishes to establish its eligibility to participate in any HEA program must submit an application to the Secretary for a determination that it qualifies as an eligible institution under this part. If the institution also wishes to be certified to participate in the title IV, HEA programs, it must indicate that intent on the application, and submit all the documentation indicated on the application to enable the Secretary to determine that it satisfies the relevant certification requirements contained in 34 CFR part 668, subparts B and L.

(b) *Reapplication.* (1) A currently designated eligible institution that is not participating in the title IV, HEA programs must apply to the Secretary for a determination that the institution continues to meet the requirements in this part if the Secretary requests the institution to reapply. If the institution wishes to be certified to participate in the title IV, HEA programs, it must submit an application to the Secretary and must submit all the supporting documentation indicated on the application to enable the Secretary to determine that it satisfies the relevant certification requirements contained in subparts B and L of 34 CFR part 668.

(2) A currently designated eligible institution that participates in the title IV, HEA programs must apply to the Secretary for a determination that the institution continues to meet the requirements in this part and in 34 CFR part 668 if the institution wishes to—

(i) Continue to participate in the title IV, HEA programs beyond the scheduled expiration of the institution's current eligibility and certification designation;

(ii) Reestablish eligibility and certification as a private nonprofit, private for-profit, or public institution following a change in ownership that results in a change in control as described in § 600.31; or

(iii) Reestablish eligibility and certification after the institution changes its status as a proprietary, nonprofit, or public institution.

(c) *Application to expand eligibility.* A currently designated eligible institution that wishes to expand the scope of its eligibility and certification and disburse title IV, HEA Program funds to students enrolled in that expanded scope must apply to the Secretary and wait for approval to—

(1) Add a location at which the institution offers or will offer 50 percent or more of an educational program if one of the following conditions applies, otherwise it must report to the Secretary under § 600.21:

(i) The institution participates in the title IV, HEA programs under a provisional certification, as provided in 34 CFR 668.13.

(ii) The institution receives title IV, HEA program funds under the reimbursement or cash monitoring payment method, as provided in 34 CFR part 668, subpart K.

(iii) The institution acquires the assets of another institution that provided educational programs at that location during the preceding year and participated in the title IV, HEA programs during that year.

(iv) The institution would be subject to a loss of eligibility under 34 CFR 668.188 if it adds that location.

(v) The Secretary previously notified the institution that it must apply for approval of an additional location.

(2) Increase its level of program offering (*e.g.*, adding graduate degree programs when it previously offered only baccalaureate degree programs);

(3) Add an educational program if the institution is required to apply to the Secretary for approval under § 600.10(c);

(4) Add a branch campus at a location that is not currently included in the institution's eligibility and certification designation; or

(5) Convert an eligible location to a branch campus.

(d) *Application format.* To satisfy the requirements of paragraphs (a), (b), and (c) of this section, an institution must apply in a format prescribed by the Secretary for that purpose and provide all the information and documentation requested by the Secretary to make a determination of its eligibility and certification.

(e) *Secretary's response to applications.* (1) If the Secretary receives an application under paragraph (a) or (b)(1) of this section, the Secretary notifies the institution—

(i) Whether the applicant institution qualifies in whole or in part as an eligible institution under the appropriate provisions in §§ 600.4 through 600.7; and

(ii) Of the locations and educational programs that qualify as the eligible institution if only a portion of the applicant qualifies as an eligible institution;

(2) If the Secretary receives an application under paragraphs (a) or (b) of this section and that institution applies to participate in the title IV, HEA programs, the Secretary notifies the institution—

(i) Whether the institution is certified to participate in those programs;

(ii) Of the title IV, HEA programs in which it is eligible to participate;

(iii) Of the title IV, HEA programs in which it is eligible to apply for funds;

(iv) Of the effective date of its eligibility to participate in those programs; and

(v) Of the conditions under which it may participate in those programs;

(3) If the Secretary receives an application under paragraph (b)(2) of this section, the Secretary notifies the institution whether it continues to be certified, or whether it reestablished its eligibility and certification to participate in the title IV, HEA programs and the scope of such approval.

(4) If the Secretary receives an application under paragraph (c)(1) of this section for an additional location, the Secretary notifies the institution whether the location is eligible or ineligible to participate in the title IV, HEA programs, and the date of eligibility if the location is determined eligible;

(5) If the Secretary receives an application under paragraph (c)(2) of this section for an increase in the level of program offering, or for an additional educational program under paragraph (c)(3) of this section, the Secretary notifies the institution whether the program qualifies as an eligible program, and if the program qualifies, the date of eligibility; and

(6) If the Secretary receives an application under paragraphs (c)(4) or (c)(5) of this section to have a branch campus certified to participate in the title IV, HEA programs as a branch campus, the Secretary notifies the institution whether that branch campus is certified to participate and the date that the branch campus is eligible to begin participation.

(f) *Disbursement rules related to applications.* (1)(i) Except as provided under paragraph (f)(1)(ii) of this section and 34 CFR 668.26, if an institution submits an application under paragraph (b)(2)(i) of this section because its participation period is scheduled to expire, after that expiration date the institution may not disburse title IV, HEA program funds to students attending that institution until the institution receives the Secretary's notification that the institution is again eligible to participate in those programs.

(ii) An institution described in paragraph (f)(1)(i) of this section may disburse title IV, HEA program funds to its students if the institution submits to the Secretary a materially complete renewal application in accordance with the provisions of 34 CFR 668.13(b)(2), and has not received a final decision from the Department on that application.

(2)(i) Except as provided under paragraph (f)(2)(ii) of this section and 34 CFR 668.26, if a private nonprofit, private for-profit, or public institution submits an application under paragraph (b)(2)(ii) or (b)(2)(iii) of this section because it has undergone or will undergo a change in ownership that results in a change of control or a change in status, the institution may not disburse title IV, HEA program funds to students attending that institution after the change of ownership or status until the institution receives the Secretary's notification that the institution is eligible to participate in those programs.

(ii) An institution described in paragraph (f)(2)(i) of this section may disburse title IV, HEA program funds to its students if the Secretary issues a provisional extension of certification under paragraph (g) of this section.

(3) If an institution must apply to the Secretary under paragraphs (c)(1) through (c)(4) of this section, the institution may not disburse title IV, HEA program funds to students attending the subject location, program, or branch until the institution receives the Secretary's notification that the location, program, or branch is eligible to participate in the title IV, HEA programs.

(4) If an institution applies to the Secretary under paragraph (c)(5) of this section to convert an eligible location to a branch campus, the institution may continue to disburse title IV, HEA program funds to students attending that eligible location.

(5) If an institution does not apply to the Secretary to obtain the Secretary's approval of a new location, program, increased level of program offering, or branch, and the location, program, or branch does not qualify as an eligible location, program, or branch of that institution under this part and 34 CFR part 668, the institution is liable for all title IV, HEA program funds it disburses to students enrolled at that location or branch or in that program.

(g) *Application for provisional extension of certification.* (1) If a private nonprofit institution, a private for-profit institution, or a public institution participating in the title IV, HEA programs undergoes a change in ownership that results in a change of control as described in 34 CFR 600.31, the Secretary may continue the institution's participation in those programs on a provisional basis, if the institution under the new ownership submits a ''materially complete application'' that is received by the Secretary no later than 10 business days after the day the change occurs.

(2) For purposes of this section, a private nonprofit institution, a private for-profit institution, or a public institution submits a materially complete application if it submits a fully completed application form designated by the Secretary supported by—

(i) A copy of the institution's State license or equivalent document that—as of the day before the change in ownership—authorized or will authorize the institution to provide a program of postsecondary education in the State in which it is physically located;

(ii) A copy of the document from the institution's accrediting association that—as of the day before the change in ownership—granted or will grant the institution accreditation status, including approval of any non-degree programs it offers;

(iii) Audited financial statements of the institution's two most recently completed fiscal years that are prepared and audited in accordance with the requirements of 34 CFR 668.23; and

(iv) Audited financial statements of the institution's new owner's two most recently completed fiscal years that are prepared and audited in accordance with the requirements of 34 CFR 668.23, or equivalent information for that owner that is acceptable to the Secretary.

(h) Terms of the extension. (1) If the Secretary approves the institution's materially complete application, the Secretary provides the institution with a provisional Program Participation Agreement (PPA). The provisional PPA extends the terms and conditions of the program participation agreement that were in effect for the institution before its change of ownership.

(2) The provisional PPA expires on the earlier of—

(i) The date on which the Secretary signs a new program participation agreement;

(ii) The date on which the Secretary notifies the institution that its application is denied; or

(iii) The last day of the month following the month in which the change of ownership occurred, unless the provisions of paragraph (h)(3) of this section apply.

(3) If the provisional PPA will expire under the provisions of paragraph (h)(2)(iii) of this section, the Secretary extends the provisional PPA on a month-to-month basis after the expiration date described in paragraph (h)(2)(iii) of this section if, prior to that expiration date, the institution provides the Secretary with—

(i) A ''same day'' balance sheet showing the financial position of the institution, as of the date of the ownership change, that is prepared in accordance with Generally Accepted Accounting Principles (GAAP) published by the Financial Accounting Standards Board and audited in accordance with Generally Accepted Government Auditing Standards (GAGAS) published by the U.S. General Accounting Office;

(ii) If not already provided, approval of the change of ownership from the State in which the institution is located by the agency that authorizes the institution to legally provide postsecondary education in that State;

(iii) If not already provided, approval of the change of ownership from the institution's accrediting agency; and

(iv) A default management plan unless the institution is exempt from providing that plan under 34 CFR 668.14(b)(15).

(Approved by the Office of Management and Budget under control number 1845–0098)

(Authority: 20 U.S.C. 1001, 1002, 1088, and 1099c)

5. Section 600.21 is revised to read as follows:

§ 600.21 Updating application information.

(a) *Reporting requirements.* Except as provided in paragraph (b) of this section, an eligible institution must report to the Secretary in a manner prescribed by the Secretary no later than 10 days after the change occurs, of any change in the following:

(1) Its name, the name of a branch, or the name of a previously reported location.

(2) Its address, the address of a branch, or the address of a previously reported location.

(3) Its establishment of an accredited and licensed additional location at which it offers or will offer 50 percent or more of an educational program if the institution wants to disburse title IV, HEA program funds to students enrolled at that location, under the provisions in paragraph (d) of this section.

(4) The way it measures program length (*e.g.*, from clock hours to credit hours, or from semester hours to quarter hours).

(5) A decrease in the level of program offering (*e.g.* the institution drops its graduate programs).

(6) A person's ability to affect substantially the actions of the institution if that person did not previously have this ability. The Secretary considers a person to have this ability if the person—

(i) Holds alone or together with another member or members of his or her family, at least a 25 percent ''ownership interest'' in the institution as defined in § 600.31(b);

(ii) Represents or holds, either alone or together with other persons, under a voting trust, power of attorney, proxy, or similar agreement at least a 25 percent ''ownership interest'' in the institution, as defined in § 600.31(b); or

(iii) Is a general partner, the chief executive officer, or chief financial officer of the institution.

(7) The individual the institution designates under 34 CFR 668.16(b)(1) as its title IV, HEA Program administrator.

(8) The closure of a branch campus or additional location that the institution was required to report to the Secretary.

(9) The governance of a public institution.

(b) *Additional reporting from institutions owned by publicly-traded corporations.* An institution that is owned by a publicly-traded corporation must report to the Secretary any change in the information described in paragraph (a)(6) of this section when it notifies its accrediting agency, but no later than 10 days after the institution learns of the change.

(c) *Secretary's response to reporting.* The Secretary notifies an institution if any reported changes affects the institution's eligibility, and the effective date of that change.

(d) *Disbursement rules related to additional locations.* When an institution must report to the Secretary about an additional location under paragraph (a)(3) of this section, the institution may not disburse title IV, HEA funds to students at that location before it reports to the Secretary about that location. Unless it is an institution that must apply to the Secretary under § 600.20(c)(1), once it reports to the Secretary about that location, the institution may disburse those funds to those students if that location is licensed and accredited.

(e) *Consequence of failure to report.* An institution's failure to inform the Secretary of a change described in paragraph (a) of this section within the time period stated in that paragraph may result in adverse action against the institution.

(f) *Definition.* The Secretary considers a member of a person's family to be his or her—

(1) Parent, sibling, spouse or child;

(2) Spouse's parent or sibling;

(3) Child's spouse; and

(4) Sibling's spouse.

(Approved by the Office of Management and Budget under control number 1845.0098)

(Authority: 20 U.S.C. 1001, 1002, 1088, and 1099c)

6. Section 600.31 is amended by:

A. Revising the section heading.

B. Revising paragraph (a)(1).

C. Redesignating paragraph (a)(2) as paragraph (a)(3) and adding a new paragraph (a)(2).

D. Removing the definition of ''ownership'' in paragraph (b) and adding, in its place, the definition of ''ownership or ownership interest''.

E. Revising paragraphs (c)(2), (c)(6), and (c)(7).

F. Revising paragraph (d)(7).

The additions and revisions read as follows:

§ 600.31 Change in ownership resulting in a change in control for private nonprofit, private for-profit and public institutions.

(a)(1) Except as provided in paragraph (a)(2) of this section, a private nonprofit, private for-profit, or public institution that undergoes a change in ownership that results in a change in control ceases to qualify as an eligible institution upon the change in ownership and control. A change in ownership that results in a change in control includes any change by which a person who has or thereby acquires an ownership interest in the entity that owns the institution or the parent corporation of that entity, acquires or loses the ability to control the institution.

(2) If a private nonprofit, private for-profit, or public institution has undergone a change in ownership that results in a change in control, the Secretary may, under the provisions of § 600.20(g) and (h), continue the institution's participation in the title IV, HEA programs on a provisional basis, provided that the institution submits, under the provisions of § 600.20(g), a materially complete application—

(i) No later than 10 business days after the change occurs; or

(ii) For an institution owned by a publicly-traded corporation, no later than 10 business days after the institution knew, or should have known of the change based upon SEC filings, that the change occurred.

* * * * *

(b) * * *

Ownership or ownership interest. (1) Ownership or ownership interest means a legal or beneficial interest in an institution or its corporate parent, or a right to share in the profits derived from the operation of an institution or its corporate parent.

(2) Ownership or ownership interest does not include an ownership interest held by—

(i) A mutual fund that is regularly and publicly traded;

(ii) A U.S. institutional investor, as defined in 17 CFR 240.15a–6(b)(7);

(iii) A profit-sharing plan of the institution or its corporate parent, provided that all full-time permanent employees of the institution or corporate parent are included in the plan; or

(iv) An Employee Stock Ownership Plan (ESOP).

* * * * *

(c) * * *

(2) *Publicly traded corporations required to be registered with the Securities and Exchange Commission (SEC).* A change in ownership and control occurs when—

(i) A person acquires such ownership and control of the corporation so that the corporation is required to file a Form 8K with the SEC notifying that agency of the change in control; or

(ii) (A) A person who is a controlling shareholder of the corporation ceases to be a controlling shareholder. A controlling shareholder is a shareholder who holds or controls through agreement both 25 percent or more of the total outstanding voting stock of the corporation and more shares of voting stock than any other shareholder. A controlling shareholder for this purpose does not include a shareholder whose sole stock ownership is held as a U.S. institutional investor, as defined in 17 CFR 240.15a–6(b)(7), held in mutual funds, held through a profit-sharing plan, or held in an Employee Stock Ownership Plan (ESOP).

(B) When a change of ownership occurs as a result of paragraph (c)(2)(ii)(A) of this section, the institution may submit its most recent quarterly financial statement as filed with the SEC, along with copies of all other SEC filings made after the close of the fiscal year for which a compliance audit has been submitted to the Department of Education, instead of the ''same day'' balance sheet.

(C) If a publicly-traded institution is provisionally certified due to a change in ownership under paragraph (c)(2)(ii) of this section, and that institution experiences another change of ownership under paragraph (c)(2)(ii) of this section, an approval of the subsequent change in ownership does not extend the original expiration date for the provisional certification provided that any current controlling shareholder was listed on the change of ownership application for which the original provisional approval was granted.

* * * * *

(6) *Nonprofit institution.* A nonprofit institution changes ownership and control when a change takes place that is described in paragraph (d) of this section.

(7) *Public institution.* The Secretary does not consider that a public institution undergoes a change in ownership that results in a change of control if there is a change in governance and the institution after the change remains a public institution, provided—

(i) The new governing authority is in the same State as included in the institution's program participation agreement; and

(ii) The new governing authority has acknowledged the public institution's continued responsibilities under its program participation agreement.

(d) * * *

(7) A change in status as a for-profit, nonprofit, or public institution.

* * * * *

(Approved by the Office of Management and Budget under control number 1845–0098)

PART 668—STUDENT ASSISTANCE GENERAL PROVISIONS

7. The authority citation for part 668 is revised to read as follows:

Authority: 20 U.S.C. 1001, 1002, 1003, 1085, 1091, 1091b, 1092, 1094, 1099c, and 1099c–1, unless otherwise noted.

8. Section 668.2(b) is amended by revising paragraphs (2)(ii) and (iii) and adding paragraph (2)(iv) to the definition of the term ''academic year'' to read as follows:

§ 668.2—General definitions.

* * * * *

(b) * * *

Academic year: * * *

(2) * * *

(ii) If an institution provides an educational program using a semester, trimester, or quarter system, or in clock hours, the Secretary considers that the institution provides one week of instructional time in that program during any week the institution provides for that program—

(A) At least one day of regularly scheduled instruction or examinations; or

(B) After the last scheduled day of classes for a term, at least one day of study for initial examinations.

(iii) If an institution provides an educational program using credit hours but not a semester, trimester, or quarter system, the Secretary considers that the institution provides one week of instructional time in that program during any week the institution provides for that program—

(A) At least 12 hours of regularly scheduled instruction or examinations; or

(B) After the last scheduled day of classes for a payment period, at least 12 hours of study for final examinations.

(iv) Instructional time does not include any vacation periods, homework, or periods of orientation or counseling.

9. A new § 668.5 is added to read as follows:

§ 668.5 Written arrangements to provide educational programs.

(a) *Written arrangements between eligible institutions.* If an eligible institution enters into a written arrangement with another eligible institution, or with a consortium of eligible institutions, under which the other eligible institution or consortium provides all or part of the educational program of students enrolled in the former institution, the Secretary considers that educational program to be an eligible program if it otherwise satisfies the requirements of § 668.8.

(b) *Written arrangements for study-abroad.* Under a study abroad program, if an eligible institution enters into a written arrangement with a foreign institution, or an organization acting on behalf of a foreign institution, under which the foreign institution provides part of the educational program of students enrolled in the eligible institution, the Secretary considers that educational program to be an eligible program if it otherwise satisfies the requirements of paragraphs (c)(1) through (c)(3) of this section.

(c) *Written arrangements between an eligible institution and an ineligible institution or organization.* If an eligible institution enters into a written arrangement with an institution or organization that is not an eligible institution under which the ineligible institution or organization provides part of the educational program of students enrolled in the eligible institution, the Secretary considers that educational program to be an eligible program if—

(1) The ineligible institution or organization has not had its eligibility to participate in the title IV, HEA programs terminated by the Secretary, or has not voluntarily withdrawn from participation in those programs under a termination, show-cause, suspension, or similar type proceeding initiated by the institution's State licensing agency, accrediting agency, guarantor, or by the Secretary;

(2) The educational program otherwise satisfies the requirements of § 668.8; and

(3)(i) The ineligible institution or organization provides not more than 25 percent of the educational program; or

(ii)(A) The ineligible institution or organization provides more than 25 percent but not more than 50 percent of the educational program;

(B) The eligible institution and the ineligible institution or organization are not owned or controlled by the same individual, partnership, or corporation; and

(C) The eligible institution's accrediting agency, or if the institution is a public postsecondary vocational educational institution, the State agency listed in the **Federal Register** in accordance with 34 CFR part 603, has specifically determined that the institution's arrangement meets the agency's standards for the contracting out of educational services.

(d) *Administration of title IV, HEA programs.* (1) If an institution enters into a written arrangement as described in paragraph (a), (b), or (c) of this section, except as provided in paragraph (d)(2) of this section, the institution at which the student is enrolled as a regular student must determine the student's eligibility for title IV, HEA program funds, and must calculate and disburse those funds to that student.

(2) In the case of a written arrangement between eligible institutions, the institutions may agree in writing to have any eligible institution in the written arrangement make those calculations and disbursements, and the Secretary does not consider that institution to be a third-party servicer for that arrangement.

(3) The institution that calculates and disburses a student's title IV, HEA program assistance under paragraph (d)(1) or (d)(2) of this section must—

(i) Take into account all the hours in which the student enrolls at each institution that apply to the student's degree or certificate when determining the student's enrollment status and cost of attendance; and (ii) Maintain all records regarding the student's eligibility for and receipt of title IV, HEA program funds.

(Authority: 20 U.S.C. 1094)

10. Section 668.8 is amended by revising paragraphs (b)(3) and (b)(4) to read as follows:

§ 668.8 Eligible program.

* * * * *

(b) * * *

(3)(i) If an institution provides an educational program using a semester, trimester, or quarter system, or in clock hours, the Secretary considers that the institution provides one week of instructional time in that program during any week the institution provides—

(A) At least one day of regularly scheduled instruction or examinations; or

(B) After the last scheduled day of classes for a term, at least one day of study for final examinations.

(ii) If an institution provides an educational program using credit hours but not a semester, trimester, or quarter system, the Secretary considers that the institution provides one week of instructional time in that program during any week the institution provides—

(A) At least 12 hours of regularly scheduled instruction or examinations; or

(B) After the last scheduled day of classes for a payment period, at least 12 hours of study for final examinations.

(4) Instructional time does not include any vacation periods, homework, or periods of orientation or counseling.

* * * * *

(Approved by the Office of Management and Budget under control number 1845–0537)

§ 668.12 [Removed and reserved]

11. Section 668.12 is removed and reserved.

12. Section 668.13 is amended by revising paragraph (a) read as follows:

§ 668.13 Certification procedures.

(a) *Requirements for certification.* (1) The Secretary certifies an institution to participate in the title IV, HEA programs if the institution qualifies as an eligible institution under 34 CFR part 600, meets the standards of this subpart and 34 CFR part 668, subpart L, and satisfies the requirements of paragraph (a)(2) of this section.

(2) Except as provided in paragraph (a)(3) of this section, if an institution wishes to participate for the first time in the title IV, HEA programs or has undergone a change in ownership that results in a change in control as described in 34 CFR 600.31, the institution must require the following individuals to complete title IV, HEA program training provided or approved by the Secretary no later than 12 months after the institution executes its program participation agreement under § 668.14:

(i) The individual the institution designates under § 668.16(b)(1) as its title IV, HEA program administrator.

(ii) The institution's chief administrator or a high level institutional official the chief administrator designates.

(3)(i) An institution may request the Secretary to waive the training requirement for any individual described in paragraph (a)(2) of this section.

(ii) When the Secretary receives a waiver request under paragraph (a)(3)(i) of this section, the Secretary may grant or deny the waiver, require another institutional official to take the training, or require alternative training.

* * * * *

(Approved by the Office of Management and Budget under control number 1845–0537)

13. Section 668.19 is revised to read as follows:

§ 668.19 Financial aid history.

(a) Before an institution may disburse title IV, HEA program funds to a student who previously attended another eligible institution, the institution must use information it obtains from the Secretary, through the National Student Loan Data System (NSLDS) or its successor system, to determine—

(1) Whether the student is in default on any title IV, HEA program loan;

(2) Whether the student owes an overpayment on any title IV, HEA program grant or Federal Perkins Loan;

(3) For the award year for which a Federal Pell Grant is requested, the student's scheduled Federal Pell Grant and the amount of Federal Pell Grant funds disbursed to the student;

(4) The outstanding principal balance of loans made to the student under each of the title IV, HEA loan programs; and

(5) For the academic year for which title IV, HEA aid is requested, the amount of, and period of enrollment for, loans made to the student under each of the title IV, HEA loan programs.

(b)(1) If a student transfers from one institution to another institution during the same award year, the institution to which the student transfers must request from the Secretary, through NSLDS, updated information about that student so it can make the determinations required under paragraph (a) of this section; and

(2) The institution may not make a disbursement to that student for seven days following its request, unless it receives the information from NSLDS in response to its request or obtains that information directly by accessing NSLDS, and the information it receives allows it to make that disbursement.

(Approved by the Office of Management and Budget under control number 1845–0537)

(Authority: 20 U.S.C. 1091 and 1094)

14. Section 668.165(a)(3)(ii) is revised to read as follows:

§ 668.165 Notices and authorizations.

(a) * * *

(3) * * *

(ii) Either in writing or electronically. If the institution sends the notice electronically, it must confirm receipt by the student or parent of the electronic notification and must maintain documentation of that confirmation.

* * * * *

(Approved by the Office of Management and Budget under control number 1845–0697)

(Authority: 20 U.S.C. 1094)

* * * * *

PART 675—FEDERAL WORK-STUDY PROGRAMS

15. The authority citation for part 675 continues to read as follows:

Authority: 42 U.S.C. 2751–2756b, unless otherwise noted.

16. Section 675.19 is amended by revising paragraphs (b)(1) and (b)(2) to read as follows:

§ 675.19 Fiscal procedures and records.

* * * * *

(b) * * *

(1) An institution must follow the record retention and examination provisions in this part and in 34 CFR 668.24.

(2) The institution must also establish and maintain program and fiscal records that—

(i) Include a certification by the student's supervisor, an official of the institution or off-campus agency, that each student has worked and earned the amount being paid. The certification must include or be supported by, for students paid on an hourly basis, a time record showing the hours each student worked in clock time sequence, or the total hours worked per day;

(ii) Include a payroll voucher containing sufficient information to support all payroll disbursements;

(iii) Include a noncash contribution record to document any payment of the institution's share of the student's earnings in the form of services and equipment (see § 675.27(a)); and

(iv) Are reconciled at least monthly.

* * * * *

(Approved by the Office of Management and Budget under control number 1845–0535)

* * * * *

PART 690—FEDERAL PELL GRANT PROGRAM

17. The authority citation for part 690 continues to read as follows:

Authority: 20 U.S.C. 1070a, unless otherwise noted.

§ 690.9 [Removed]

18. Section 690.9 is removed.

19. Section 690.75 is amended by removing the words ''financial aid transcript'' in paragraph (a); by removing the reference to ''34 CFR 668.7'' in paragraph (a)(1) and adding, in its place, ''34 CFR part 668, subpart C''; and by revising the OMB control number to read as follows:

§ 690.75 Determination of eligibility for payment.

* * * * *

(Approved by the Office of Management and Budget under control number 1845–0681)

[FR Doc. 00–27894 Filed 10–31–00; 8:45 am]

BILLING CODE 4000–01–P

Federal Register

Wednesday,
November 1, 2000

Part X

Department of Education

34 CFR Parts 674, 682, and 685

Federal Perkins Loan Program, Federal Family Education Loan Program, and William D. Ford Federal Direct Loan Program; Final Regulations

DEPARTMENT OF EDUCATION

34 CFR Parts 674, 682, and 685

RIN 1845–AA12

Federal Perkins Loan Program, Federal Family Education Loan Program, and William D. Ford Federal Direct Loan Program

AGENCY: Office of Postsecondary Education, Department of Education.

ACTION: Final regulations.

SUMMARY: The Secretary amends the regulations governing the Federal Perkins (Perkins) Loan Program, Federal Family Education Loan (FFEL) Program, and William D. Ford Federal Direct Loan (Direct Loan) Program to strengthen and improve the processes for granting loan discharges based on a borrower's death or total and permanent disability.

DATES: Effective July 1, 2002, except the following provisions of these regulations are effective July 1, 2001: §§ 674.9(h)(3), 674.51(s), 674.61(a), 682.200(b), the redesignations of § 682.201(a)(5)–(a)(7), 682.201(a)(6)(iii), 682.402(b)(2) and (3), 682.402(g)(1)(iii), 685.200(a)(1)(iv)(A) and (B), and 685.212(a).

For additional information see the discussion of effective dates under the Analysis of Comments and Changes section that follows.

FOR FURTHER INFORMATION CONTACT: For the FFEL and Perkins Loan Programs, Mr. Brian Smith, or for the Direct Loan Program, Mr. Jon Utz; U.S. Department of Education, 400 Maryland Avenue, SW., Room 3045, Regional Office Building No. 3, Washington, DC 20202–5345. Telephone: (202) 708–8242. If you use a telecommunications device for the deaf (TDD), you may call the Federal Information Relay Service (FIRS) at 1–800–877–8339.

Individuals with disabilities may obtain this document in an alternative format (*e.g.,* Braille, large print, audiotape, or computer diskette) on request to the contact persons listed under **FOR FURTHER INFORMATION CONTACT.**

SUPPLEMENTARY INFORMATION: On August 2, 2000, the Secretary published a notice of proposed rulemaking (NPRM) for the Perkins, FFEL, and Direct Loan programs in the **Federal Register** (65 FR 47634). In the preamble to the NPRM, the Secretary discussed the following major proposed changes:

Amending §§ 674.61, 682.402, and 685.212 to require that an original or certified copy of a death certificate be provided to support a discharge of a loan based on death, although other documentation may be accepted under unusual circumstances (page 47636).

Amending §§ 674.51, 682.200, and 685.102 to revise the definition of ''totally and permanently disabled'' (page 47636).

Amending §§ 674.61(b)(3)(ii), 682.402(c)(2)(ii), and 685.213(b)(2) to allow disability discharges to be granted based on documentation from the Social Security Administration (SSA) in lieu of a physician's certification of total and permanent disability.

Amending §§ 674.61(b)(3)–(6), 682.402(c)(2)–(12), and 685.213(b) to change the process for considering applications for a disability discharge on a student loan by placing loans in a conditional discharge status for up to three years, before granting a final discharge. We proposed requiring FFEL and Perkins loans to be assigned to us after a determination by the loan holder or guaranty agency that the borrower meets the criteria for a total and permanent disability discharge (pages 47637–47638).

Amending §§ 674.61(b)(1), (6), and (7), 682.402(c)(1), (12), and (13), and 685.213(a)(1) and (d) to establish the rules for granting a borrower a conditional discharge if the borrower appears to meet the requirements for a total and permanent disability discharge. When a loan is in a conditional discharge status, collection activity on the loan is suspended for up to three years from the date of the onset of the disability.

Amending §§ 674.61(b)(2), (8) and (9), 682.402(c)(14) and (15), and 685.213(a)(2) and (c) to discharge the loan if the borrower continues to meet the disability discharge criteria at the end of the three-year conditional discharge period.

If the borrower does not the disability discharge criteria collection activity resumes, but the borrower is not obligated to pay interest that has accrued on the loan during the conditional discharge period (page 47638).

Amending §§ 674.61(b)(11) and (12), 682.402(r)(2) and (3), and 685.212(g)(2) to require that payments received by a Perkins Loan school, FFEL lender or guaranty agency on a loan that has been assigned to us prior to a final determination of eligibility for a disability discharge must be sent to us. We will apply those payments to the loan. If the loan is ultimately discharged, the payments will be returned to the sender (page 47639).

Amending §§ 674.9, 682.201, and 685.200 to allow a borrower whose loan is in a conditional disability discharge period to be eligible for additional title IV loans if a physician or the SSA certifies that the borrower is able to engage in substantial gainful activity; the borrower acknowledges that neither the conditionally discharged loan nor the new loan can be discharged on the basis of the borrower's current disability unless that disability substantially deteriorates; and collection activity resumes on the conditionally discharged loan (page 47639).

These final regulations contain changes from the NPRM that are explained in the Analysis of Comments and Changes that follows.

Analysis of Comments and Changes

The regulations in this document were developed through the use of negotiated rulemaking. Section 492 of the Higher Education Act requires that, before publishing any proposed regulations to implement programs under title IV of the Act, the Secretary obtain public involvement in the development of the proposed regulations. After obtaining advice and recommendations, the Secretary must conduct a negotiated rulemaking process to develop the proposed regulations.

These regulations were published in proposed form on August 2, 2000. The negotiated rulemaking committee was unable to reach consensus on the proposed regulations. The Secretary invited comments on the proposed regulations by September 18, 2000. In response to the Secretary's invitation in the NPRM, 46 parties submitted comments on the proposed regulations. An analysis of the comments and of the changes in the regulations since publication of the NPRM follows.

We discuss substantive issues under the sections of the regulations to which they pertain. Generally, we do not address technical and other minor changes—and suggested changes the law does not authorize the Secretary to make.

Effective Date

Comment: Many commenters responded to our request for comments on whether a later effective date should be considered for these regulations. Most commenters supported an effective date of July 1, 2001 for the death discharge provisions, but generally recommended a delay in the effective date for the total and permanent disability discharge provisions until July 1, 2002 or 90 days after the issuance of a revised discharge application form and implementation guide to the new discharge procedures, whichever is later.

Discussion: We agree that the operational changes needed to implement some of the conditional discharge provisions of the regulations support a delay in the effective date of those provisions. We must develop a system for monitoring borrowers' earnings during the conditional discharge period, revise the assignment process for guaranty agencies and develop a comparable assignment process for the Perkins Loan Program. We must also retain and train an organization that will handle initial and final discharge determinations for the Secretary. We may also have to retain a loan servicer to handle pre-default disability assignments that must be converted back to repayment. We will need to revise the current total and permanent disability discharge request form to reflect the new process and to allow for its use in the Perkins Loan Program. Procedural guidance will need to be developed and distributed to schools, lenders, and guaranty agencies.

Change: As suggested by some of the commenters, the provisions that govern death discharges, §§ 674.61(a), 682.402(b), 682.402(g)(1)(iii), and 685.212(a), will become effective on July 1, 2001. We will also implement the revised definition of ''totally and permanently disabled'' in §§ 674.51(s) and 682.200(b) on July 1, 2001.

Even though we will delay the implementation of the conditional discharge until July 1, 2002, we have decided that for any loan that is discharged due to total and permanent disability on or after July 1, 2001 through June 30, 2002, the borrower must reaffirm that loan if the borrower receives a new title IV loan within three years from the date that the borrower became totally and permanently disabled as certified by the physician. These provisions, §§ 674.9(h)(3), 682.201(a)(6)(iii), and 685.200(a)(1)(iv)(A) and (B) will become effective on July 1, 2001.

All other changes related to implementing the new processes for granting total and permanent disability discharges will become effective on July 1, 2002.

Sections 674.61, 682.402, and 685.212 Death Discharge

Comment: In response to the requirement in the proposed regulations that an ''original'' or ''certified'' copy of the death certificate be submitted to support a request for a discharge based on death, two commenters indicated that the terms ''original'' or ''certified'' may be defined differently in different States. One of the commenters recommended that the regulation be revised to indicate that a death discharge must be based on an ''official death certificate as defined by the State in which the borrower died.'' The other commenter suggested that the regulations specify what is required for a copy of a death certificate to be considered ''certified.''

Discussion: We believe the term ''original'' is self-explanatory. We also believe it is implicit in the term ''certified'' that the governmental entity issuing the death certificate defines what constitutes a ''certified'' copy of the original.

Change: None.

Comment: Several commenters suggested that in lieu of requiring each of a borrower's loan holders to obtain an original or certified copy of the death certificate, the regulations should allow a loan holder to discharge a borrower's loan if the National Student Loan Data System (NSLDS) indicates that one of the borrower's other title IV loans has been discharged due to death. The commenters felt that if one of the borrower's loan holders obtained the necessary documentation to establish that the borrower had died and reported this information to NSLDS, this should be sufficient to discharge the borrower's other title IV loans. One commenter suggested that NSLDS should be modified to indicate whether a death discharge was based on a death certificate or alternative documentation. The commenter argued that, with this information, a loan holder could choose to seek independent corroboration of the borrower's death if a loan had been cancelled based on alternative documentation. The commenters believed that this approach would reduce burden on the families of deceased borrowers.

One commenter proposed an alternative approach whereby a loan holder would be required to notify the Secretary upon learning of a borrower's death and the Secretary would assume the responsibility of obtaining confirmation.

Discussion: As discussed in the preamble to the NPRM (65 FR 47634, 47636), the changes to this regulation are based in part on the findings of a report issued by the Department of Education's Office of Inspector General (OIG) in June 1999. That report concluded, among other things, that death discharges were being granted without reliable supporting documentation. In light of the OIG's findings with regard to fraudulent death discharge claims, we believe it is important to require each of a borrower's loan holders to independently obtain the required documentation of a borrower's death. We note that this is the current requirement and this regulation will not increase any burden on the borrower or loan holder. However, we appreciate the commenters' suggestions and will consider whether to explore ways in which NSLDS might be used in the future to improve the processing of death discharge applications. With regard to the suggestion that the Secretary should obtain the necessary documentation of a borrower's death, we believe that—as is the case with other types of loan discharges—documentation of a borrower's eligibility for discharge should remain the responsibility of the loan holder.

Change: None.

Comment: Two commenters felt that the problems identified by the OIG were not significant enough to warrant requiring an original or certified copy of the death certificate in all but exceptional circumstances. One of the commenters noted that while his institution generally requests an official copy of the death certificate, it would be preferable to retain the current option of using an alternative proof of death that is acceptable under State law. Another commenter felt that the proposed requirements would place an undue burden on families, on the grounds that certified copies of death certificates can be difficult and expensive to obtain. The commenter did not believe that allowing alternative documentation in ''exceptional circumstances'' would reduce burden for the majority of families of deceased borrowers. The commenter recommended keeping the current documentation requirements, but encouraging loan holders to more closely inspect documents for fraud.

Two commenters noted that obtaining an original or certified copy of the death certificate may not be the only official means of confirming an individual's death. One of the commenters reported that some State social service agencies are beginning to put public records on their websites, and suggested that loan holders should be allowed to approve death discharges if they can obtain electronic verification of an individual's death directly from an official source.

One commenter recommended that § 682.402(b)(2) be revised to provide that a guaranty agency must maintain documentation of death discharges based on alternative documentation ''as required in § 682.414(a).'' The commenter believed that this change would clarify that documentation of exceptional circumstances must be maintained within the borrower's record as is the case with all other claim documentation.

Discussion: We do not agree with the commenters' view that the problems identified by the OIG are not significant enough to warrant changing the requirements for documentation of death. Even a small number of improperly granted death discharges represents a serious problem and undermines program integrity. We believe that the most appropriate response to the OIG's findings is to require loan holders to obtain proof of a borrower's death in the form of an original or certified copy of the death certificate. In the vast majority of cases, obtaining an original or certified copy of the death certificate is not unduly burdensome or costly. In addition, such documentation is generally required by insurance companies and other parties in order to pay benefits and close accounts.

We are interested in the commenters' suggestions regarding the possibility of using electronic records and we will consider whether to explore these other means for obtaining official proof of death that could potentially be used in the future.

Finally, we do not believe it is necessary to cross-reference the general record keeping requirements in § 682.414.

Change: None.

Comment: Several commenters recommended that loan holders not be limited to obtaining acceptable documentation of death only from the borrower's representative or parent, since a loan holder may obtain a death certificate directly from an official source.

Discussion: We agree with the commenters. However, we emphasize that the loan holder must still obtain an original or certified copy of the death certificate and may not simply contact an official source for verification of a borrower's death.

Change: We have revised § 682.402(b)(2) and § 685.212(a)(1) and (2) to eliminate the suggestion that a parent or representative must provide the necessary documentation of the borrower's death. No changes are needed in the Perkins Loan Program regulations.

Comment: Many commenters recommended that we reconsider the proposed requirement that only the chief executive officer (CEO) of the guaranty agency or chief financial officer (CFO) of the institution would be authorized to approve a death discharge application that is based on documentation other than the original or a certified copy of a death certificate. The commenters felt that the proposed requirement was overly restrictive, and could result in delays in the processing of discharges. Many of the commenters believed that it would be more appropriate to allow the CEO or CFO to designate another official of the organization who would be authorized to approve alternative documentation of a borrower's death.

Discussion: As explained in the preamble to the proposed regulation, the requirement that a senior official of the guaranty agency or institution approve the use of alternative documentation is intended to ensure that such documentation is used only rarely, and in exceptional circumstances. We believe that allowing the CEO or CFO to designate another official who could approve alternative documentation would be contrary to the intent of the regulations. Since very few death discharges should be approved based on such alternative documentation, we believe the restrictions will not adversely affect the processing of death discharges.

Change: None.

Comment: One commenter suggested that the proposed Direct Loan regulations appear to allow the use of alternative documentation of death on a broader basis than would be permitted in the Perkins and FFEL programs. The commenters noted that § 674.61(a) and § 682.402(b)(2) state that discharges based on alternative documentation of death may be approved only ''under exceptional circumstances and on a case-by-case basis,'' while the corresponding section of the Direct Loan Program regulations, § 685.212(a)(2), does not contain the same restrictive language. The commenter recommended that the Direct Loan regulations be revised to include the same language as the Perkins and FFEL program regulations.

Discussion: We did not intend to establish a less restrictive requirement for the Direct Loan Program and agree with the commenter's recommendation.

Change: We have revised § 685.212(a)(2) to indicate that the Secretary will approve discharges in the Direct Loan Program based on alternative documentation only in exceptional circumstances and on a case-by-case basis.

Comment: Several commenters recommended that § 682.402(b)(3) of the proposed regulation be revised to provide that the lender must suspend collection activity against the borrower ''and any endorser'' after receiving reliable information indicating that the borrower has died. The commenters noted that this would be consistent with the corresponding provision for total and permanent disability discharges in § 682.402(c)(3).

Discussion: We agree with the commenters.

Change: We have revised § 682.402(b)(3) to authorize suspension of collection activities against an endorser under these circumstances.

Sections 674.51, 682.200, and 685.102 Definitions

Comment: Many commenters supported the removal of the criteria ''or attend school'' from the definition of totally and permanently disabled. However, one commenter expressed concerns about a borrower's eligibility to receive loans after the end of the three-year conditional discharge period. The commenter noted that the borrower might later be unable to repay those loans because of a pre-existing medical condition that prevents the borrower from working.

Discussion: We thank the commenters for their support. In response to the commenter's concerns about a borrower being unable to repay loans received after the end of the three-year conditional discharge period because of a pre-existing medical condition that prevents the borrower from working, we note that a borrower who seeks a new loan after the final discharge of a previous loan at the end of the three-year conditional discharge period will continue to be subject to the same requirements that apply under the current regulations. That is, the borrower must provide a certification from a physician that the borrower is able to engage in substantial gainful activity, and must acknowledge in writing that the new loan cannot be discharged based on a pre-existing condition unless that condition has substantially deteriorated.

Change: None.

Comment: One commenter questioned the rationale for removing ''attend school'' from the definition of ''totally and permanently disabled,'' and recommended that the current definition be retained. The commenter believed that the purpose of attending school is to receive training that will later lead to gainful employment and the ability to repay a student loan.

Discussion: As explained in the preamble to the NPRM, the requirement that an individual must be unable to attend school was removed from the definition of totally and permanently disabled because of our belief that given medical and technological advances, it is no longer meaningful to use ability to attend school as an indicator of total and permanent disability. In addition, the prohibition against attending school

could have the unintended consequence of discouraging disabled individuals from pursuing further education or training.

Change: None.

Comment: Three commenters felt that the proposed definition of ''totally and permanently disabled,'' which provides that a borrower must be ''unable to work and earn money,'' is not consistent with the proposed discharge eligibility criteria, which allow a borrower to receive earnings from work and still qualify for loan discharge. The commenters believed that this difference would be confusing to borrowers, and suggested that the definition of ''totally and permanently disabled'' be revised to indicate that a borrower must either be unable to work or, if able to work, that the borrower's earnings could not exceed 100 percent of the poverty line for a family of two during the conditional discharge period.

Discussion: We do not agree that the definition of ''totally and permanently disabled'' conflicts with the discharge eligibility criteria. To qualify for a conditional discharge due to total and permanent disability, a borrower must provide a certification from a physician indicating that, in the physician's best professional judgment, the borrower is unable to work and earn money because of an illness or injury that is expected to continue indefinitely or result in death. However, advances in medical treatment may result in an improvement in the borrower's condition that could not be predicted at the time of the physician's certification. In addition, changes in employment conditions may allow a borrower to return to work despite his or her condition. We do not wish to discourage disabled individuals from attempting employment. Accordingly, the regulations do not disqualify borrowers who have minimal earnings during the conditional discharge period.

On the other hand, we do not believe it is appropriate to revise the definition of ''totally and permanently disabled,'' to include an earnings limit. First of all, such an addition would be inconsistent with the rest of the definition which refers to a borrower who cannot work and earn money. Second, as a practical matter, it would significantly complicate the process for determining if the borrower is disabled by requiring the borrower to submit income information as well as the doctor's certification as part of the initial application.

Sections 674.61, 682.402, 685.212 and 685.213 Total and Permanent Disability Discharge

Comment: Many commenters argued that the Inspector General's report discussed in the preamble to the NPRM (''Improving the Process for Forgiving Student Loans'') does not provide compelling evidence that substantive changes are required to the process for granting total and permanent disability discharges. One commenter disagreed with this view, and stated that the findings of the Inspector General's report are cause for concern and legitimate reasons for the Department to take action.

The commenters who stated the view that the findings in the OIG's report do not justify the changes proposed in the NPRM suggested that we conduct a comprehensive examination of the specific accounts supporting the findings in the OIG's report before making changes to the existing process for granting total and permanent disability discharges. They believe that such an examination is necessary to establish the reason for the exceptions, to identify possible vulnerabilities in the system for granting disability discharges, and to allow us to design a tailored solution to address the problem.

Discussion: The OIG clearly found evidence of inappropriate disability discharges being awarded in the FFEL program. The OIG's conclusion that 81 individuals earned more than $50,000 in 1997 after receiving a disability discharge between July 1, 1994 and December 31, 1996 cannot be ignored. The OIG also reported that 6,800 new loans totaling almost $20 million were awarded to borrowers who returned to school after having loans totaling nearly $11.5 million discharged. These findings indicate a significant problem that warrants the proposed changes.

Change: None.

Comment: Many commenters criticized the proposed regulations on the grounds that our approach to reforming the disability discharge procedures would adversely impact all eligible borrowers, rather than focusing on those borrowers who are later determined to be ineligible for a final discharge.

Several commenters objected to the proposed change because they believe it would cause undue hardship to borrowers. They contend that the complexity of the proposed disability discharge procedures would create unnecessary anxiety and confusion for disabled borrowers, particularly those afflicted with severe mental or emotional impairments.

One commenter raised concerns about the effect the proposed change would have on potential borrowers who might think twice about obtaining student loans for their future educational needs. The commenter believed that the conditional discharge approach may potentially discourage a person from pursuing higher education for fear of an inability to repay his or her loans due to medical difficulties.

Discussion: As noted in the OIG report, the discharge of student loans based on a total and permanent disability can provide a significant benefit to the borrower. At the same time, the disability discharge reflects a governmental decision to forgive thousands of dollars in debt. Disability discharges thus represent a significant cost to federal taxpayers. In these circumstances, it is clearly appropriate to have stringent criteria for discharging a loan. While the conditional discharge period may be a slight inconvenience for some borrowers, it helps to ensure that total and permanent disability discharges are only granted to borrowers whose disabilities are truly ''permanent.''

We disagree with the commenters' assumption that the three-year conditional discharge period will create undue anxiety for borrowers. Borrowers will be informed up front of the criteria they must meet to qualify for a disability discharge. Borrowers who continue to meet the eligibility criteria will receive a final discharge at the close of the conditional period. Moreover, borrowers suffer no negative consequences during the conditional discharge period. No collection activity or adverse credit reporting occurs during the conditional discharge period. If a borrower's situation changes during this period, we believe the borrower should be expected to repay the student loan. However, even if collection activity resumes on the loan, the borrower is not obligated to pay any interest that accrued during the conditional discharge period.

We disagree with the claim by one of the commenters that the conditional discharge approach will be particularly harmful to borrowers with severe mental or emotional impairments. As we noted in the preamble to the NPRM (65 FR at 47635), we are not aware of any other major federal program that provides disability benefits based on a one-time review of an individual's condition, and we did not receive any comments suggesting otherwise. The adoption of the policies reflected in this regulation will make the processes for discharges of student loans more comparable to that of other federal

programs to which the borrower may also be applying for benefits.

We strongly disagree with the commenter who suggested that the new regulations would somehow discourage borrowers from taking out student loans to further their education. Most borrowers, even those with some pre-existing condition, recognize the value of postsecondary education and appreciate the opportunity and access to education that student loans provide them. We do not share the commenter's apparent belief that a borrower will be dissuaded from pursuing an education based on the standard for a disability discharge.

Change: None.

Comment: Several commenters objected to the proposed change because they believe it will result in undue administrative burden on institutions and guaranty agencies. One commenter claimed that the proposed approach will not work and will result in genuinely disabled borrowers not receiving discharges to which they are entitled. The commenter also believed that the new process will require guaranty agencies and the Department to meet impossible demands for vastly increased staffing and medical and vocational expertise.

Several commenters also claimed that implementation of the proposed regulations would result in considerable expense for taxpayers and loan administrators, and questioned whether the benefits of the regulations justify the expense.

Discussion: We agree that there are many operational details that will need to be addressed before the regulations can be implemented (see the prior discussion on effective date). However, we do not believe that the regulations will create undue administrative burden on loan holders and guaranty agencies. For these participants, there will be little change from the current process of reviewing discharge requests, except that their decision to grant a total and permanent disability discharge will not be final and they will assign the loans to us.

In regard to the commenters' claim that the costs of the new process will exceed the benefits, our analysis does not support this claim. Moreover, even a small percentage of borrowers who were ineligible for loan discharge calls the integrity of the loan discharge process into question and may threaten public support for the title IV student loan programs.

Change: None.

Comment: Overall, the commenters claimed that the proposed rule will be difficult to comprehend, difficult to administer, difficult to explain to students, and that setting up new bureaucratic systems is not the answer. However, two commenters agreed in general with the key provisions of the proposed regulations.

Many commenters recommended that we withdraw the proposed regulations.

A couple of commenters stated that the proposed regulations are unnecessary because it is feasible to identify abusers by cross-referencing tax information with discharge information and to reverse a discharge granted to an ineligible borrower.

Some commenters questioned whether we have the legal authority to impose a conditional discharge on borrowers, since a conditional discharge is not specifically mentioned in the statute.

Discussion: The proposed regulations were discussed during an extensive negotiated rulemaking process and were subject to the opportunity for public comment. The comments we received and which are discussed in this preamble have raised a number of issues. We have responded to those issues in this document and, where appropriate, have made changes to the regulations. We believe that this final regulation creates a workable process that will result in fair treatment for borrowers and taxpayers.

We also disagree with the commenters who suggested that the regulations are unnecessary because we already have the ability to revoke discharges. Generally, a final agency decision cannot be changed based on events occurring after the decision. Accordingly, we believe that it is unlikely that loan discharges for borrowers who met the eligibility criteria could be easily reinstated and legally enforced at a later date.

Change: None.

Comment: Several commenters recommended that we develop an operational guide for the new policy and allow interested organizations to review the guide. They believe that such a major change in policy will require careful coordination between the various entities that administer the title IV student loan programs and that operational details must be carefully considered and documented.

Discussion: We agree with the commenters and intend to work with representatives of schools, lenders, servicers, guarantors and borrowers to develop appropriate written guidance to implement the regulations.

Change: None.

Comment: Several commenters offered alternative solutions to those proposed in the NPRM. Some recommended that we reconsider the proposal made by the non-federal negotiators during the negotiated rulemaking process. Under that proposal, a borrower would receive a disability discharge after consideration of the initial application. However, the borrower would also be notified that if certain events occur (receipt of an additional title IV loan or significant earnings) during a specified time period following the discharge, the discharge would be revoked.

One commenter pointed out that reinstatement of loans in cases where a borrower has requested another title IV loan subsequent to a disability discharge has been a workable element of the title IV program in the past. In addition, the Department has routinely reinstated nonconditionally discharged loans in cases where the determination of discharge eligibility was based on incorrect or changing information, as is often the case with closed school revisions.

One commenter recommended that we rely on State or Federal agencies, such as the Social Security Administration, that are specifically charged by law with making disability determinations. The commenter believes that these agencies are far more capable of making fair, uniform, and reliable disability determinations than loan holders or guaranty agencies. The commenter believes that placing disability discharge determinations in the hands of a knowledgeable third party is the best way to ensure the integrity and fairness of all such determinations.

One commenter recommended that we turn over verified fraudulent disability claims to the U.S. Attorney's Office for possible prosecution. The commenter believes that if it became known that the Department vigorously pursues fraud, it would deter physicians from falsely certifying disability request forms.

One commenter recommended that we require lenders to offer credit insurance to student loan borrowers at reasonable rates. This insurance would repay the full loan in cases of authentic total and permanent disability that can be quickly and fairly verified. Borrowers who accept the credit insurance could be given reduced interest points as an incentive.

Another commenter suggested that Perkins Loan holders be allowed to continue to make disability determinations, which would be reviewed as part of the annual audit. In cases where the auditors question the holder's judgment, we would disallow the discharge, and the loan holder

would be required to reimburse the Perkins loan fund. The commenter believed that this approach would eliminate approvals based on insufficient evidence.

Two commenters recommended that we reinstate the deferment for temporary total disability. By doing so, borrowers would receive the relief they need, and lenders and schools would have the ability to determine, based on the physicians' certification, if the disability is total and permanent at the end of an appropriate period of time. Loan holders could also monitor the status of the borrower during the deferment period for signs of substantial gainful employment.

Discussion: Although we have reinstated discharged loans in the past due to fraud or based on inaccurate information submitted by the borrower, inappropriate disability discharges are not necessarily fraudulent. The new regulations recognize that a borrower's medical condition is not static and could improve after the borrower received a disability discharge. Similarly, changes in employment technologies and opportunities could allow a disabled individual to return to work. We do not believe that it is appropriate to discharge the obligation to repay thousands of dollars of loans based on a one-time review of the borrower's medical condition. The commenters did not cite any other disability benefit program that relies on such a limited amount of evidence to support the disability determination.

We have explored the option of relying on determinations by other agencies, such as the Social Security Administration (SSA). We have found that most of these agencies have disability criteria that are less stringent than ours because they provide disability payments or benefits based on the borrower's continuing disability. If an individual's condition improves, the agency stops providing the benefits. We believe that with a discharge—a one-time cancellation of a borrower's obligation to repay a debt of thousands of dollars—there is a need to use a higher standard. As a result, we have decided against using SSA disability determinations. See ''Use of Social Security Disability Documentation'' for a further discussion of this issue.

We also do not believe that reviews of disability determinations with annual audits would be practical. Auditors do not have the expertise to make judgments about a holder's determination in disability cases. We believe that the centralized process provided in the regulations provides for a more consistent review of disability discharge approvals.

We believe that the commenter's suggestion that we require lenders to offer credit insurance would only increase costs to all student loan borrowers and would not address the problem of providing the discharge to ineligible borrowers. Moreover, this proposal and the proposal to reinstate the temporary total disability deferment for all borrowers, would require statutory changes.

Change: None.

Sections 674.61(b)(3)(ii), 682.402(c)(2)(ii), and 685.213(b)(2) Use of Social Security Administration Disability Documentation

Comment: Many commenters expressed concern that the proposed regulations did not provide specific guidelines on the type of SSA documentation that a borrower could provide as an alternative to a physician's certification. The commenters suggested that the lack of guidelines on what type of documentation is acceptable would result in significant borrower confusion and increase the administrative burden for loan holders in this process. The commenters strongly recommended that the final regulations include explicit and clearly defined guidelines for determining the type of SSA documentation that could be used as an alternative to a physician's certification. Many of the commenters stated that if it was not possible to incorporate such guidelines in the final regulations, all references to the use of SSA documentation should be removed.

One commenter supported the concept of using SSA documentation as an alternative to a physician's certification only if it were allowed to be used in all cases. The commenter felt that, if it were not allowed in all cases, it would be too difficult to explain to borrowers when SSA documentation would be acceptable, and when it would not.

One commenter believed that using SSA documentation to establish that a borrower is totally and permanently disabled would be the most sensible approach, and expressed hopes that we would be able to implement this approach. Another commenter noted that the ability to accept a SSA disability determination as an alternative to a physician's certification would reduce administrative burden. However, the commenter has seen SSA disability documentation and was concerned that the SSA's eligibility requirements are not as stringent as the current requirements for discharging student loans based on total and permanent disability.

One commenter, representing organizations that specialize in consumer issues, believed that the language of the preamble to the proposed regulations might suggest to some readers that any disability determination from the SSA would be sufficient to establish a borrower's eligibility for a total and permanent disability discharge of a title IV loan. However, the commenter believed that our intent is to allow the use of SSA documentation only for individuals whom the SSA has placed in the highest of three continuing disability review categories, ''medical improvement not expected.'' The commenter felt that this approach would benefit very few borrowers, since the ''medical improvement not expected'' category consists of individuals with serious conditions that are usually progressive and possibly fatal and who would probably have no trouble obtaining a physician's certification for a discharge. The commenter believed that we should go further and use the SSA's continuing disability review categories, as a basis for determining which borrower's discharges to review for possible revocation within a limited time period. The commenter felt that borrowers should be able to submit documentation of any SSA disability benefits award as sufficient evidence to warrant a disability discharge.

Discussion: We agree with the many commenters who felt that the lack of specific guidelines on acceptable SSA documentation could cause confusion for borrowers and loan holders. As explained in the preamble to the proposed regulations, the standard that an individual must meet to qualify for SSA disability benefits is not the same as the total and permanent disability standard that applies in the title IV loan programs. Many individuals who receive disability benefits from the SSA would not be considered totally and permanently disabled under the title IV definition. For this reason, we concluded that it would not be appropriate to accept SSA documentation as an alternative to a physician's certification in all cases.

In the preamble to the NPRM we indicated that we would work with SSA to determine whether there is documentation that the SSA provides to some individuals that would be comparable to a physician's certification that a borrower is totally and permanently disabled according to our definition. After extensive discussion and examination, however, we have determined that there is no

documentation currently issued by SSA that would effectively establish that a borrower is totally and permanently disabled under the title IV standard.

Change: We have revised the regulations by removing all references to the use of SSA documentation as an alternative to a physician's certification.

Sections 674.61(b)(3)–(6), 682.402(C)(2)–(12), and 685.213(b) Initial Determination of Total and Permanent Disability

Comment: One commenter questioned the ability of loan holders and guaranty agencies to make medical determinations regarding a borrower's disability status. The commenter expressed the view that it is not possible, even for a medically trained reviewer, to determine, merely by reading a physician's certification, whether a borrower is disabled. Another commenter questioned whether we would be able to make valid determinations of a borrower's disability without having full access to the borrower's entire medical history. The commenter also expressed concern that our disability determinations under the new process will be arbitrary and inconsistent.

Discussion: The regulations do not change the role of loan holders and guarantors in reviewing the basis for a borrower's disability discharge claims. Loan holders have always had the authority to request additional information or retain medical advice in evaluating disability discharge requests. We believe that the added step of assigning approved disability discharge claims to us for a second review will ensure a comprehensive evaluation of the disability request. We plan to request any additional information and expertise necessary to ensure such a review.

We believe that the new procedures will improve the consistency of decisions on disability discharge claims. Under the new process, we will be able to develop standards and procedures for reviewing such claims and to communicate those standards to the loan holders and guaranty agencies.

Change: None.

Comment: One commenter recommended identifying specific medical records that a borrower must provide to support a disability claim. The commenter stated that, in many cases, physicians charge for providing copies of records and letters, and a specific list of documents would prevent a borrower from incurring extra costs by obtaining unnecessary records.

Discussion: We believe loan holders should not be restricted as to the type of additional medical documentation they can request in order to make a disability determination. We believe that the types of documentation required may differ depending on the circumstances and that it is neither possible nor useful to attempt to provide such a list.

Change: None.

Comment: A large number of commenters approved of our proposal that we assume responsibility for servicing loans after the loan holder or guarantor has assigned to us a loan on which the loan holder or guarantor has approved a disability discharge claim. These commenters agreed that once the loan is assigned to us for determination of eligibility for a conditional discharge, regardless of the determination made, the loan should remain with us.

Discussion: We appreciate the commenters' support for this provision of the regulations.

Change: None.

Comment: One commenter felt that disabled borrowers with multiple loans should not be forced to submit separate disability discharge claims to each loan holder. This commenter pointed out that, for other title IV loan discharges, there exists a cross-program documentation policy that allows the appropriate program participant to discharge a loan based on the comparable discharge of another title IV loan. The commenter suggested that we should adopt a similar policy and authorize schools and guaranty agencies to discharge a borrower's loan without requiring additional documentation if another of the same borrower's loans has been discharged due to a disability.

Discussion: In some instances the eligibility for discharge relies in part on when the individual loan was made and on the borrower's condition at that time. Therefore, we believe that the preliminary determination of whether a borrower qualifies for a disability discharge should be made by the holder of the loan (Secretary, school, lender, guaranty agency).

Change: None.

Comment: One commenter requested clarification on the status of a loan that is delinquent or in default at the time it is placed into a conditional discharge status. The regulations state that the borrower is not considered delinquent or in default on the loan during the conditional discharge period.

Discussion: We agree that the regulatory language should be clarified. During the conditional discharge period, the loan retains the status that it was in at the time the conditional discharge was granted. If a loan was current at the time of the conditional discharge, it will remain current and not be considered delinquent or in default during the conditional discharge period. If the loan was delinquent or in default at the time the conditional discharge was granted, it will remain delinquent or in default during the conditional discharge period.

Change: We have revised §§ 674.61(b)(7)(ii), 682.402(c)(14)(ii), and 685.213(d)(2) to clarify that a borrower is not considered delinquent on a loan during the conditional discharge period, unless the loan was delinquent or in default at the time of the conditional discharge.

Comment: One commenter recommended that we explain the process that a guarantor must follow if the guarantor is the holder of the loan at the time the borrower requests a total and permanent discharge.

Discussion: The process is the same as described in the regulations, except that the borrower applies directly to the guaranty agency for the discharge, rather than to the lender. We do not believe it is necessary to specifically describe this process in the regulations.

Change: None.

Comment: Several commenters suggested that we work with the student loan community to develop a standardized application form and physician's certification for total and permanent disability discharges. Commenters believed that a standardized form would reduce confusion for physicians and loan holders. One commenter recommended that the standardized form include a specific definition of ''permanent and total disability'' to clarify any ambiguity or misconceptions a physician might have.

Discussion: We agree with the commenters and will work with the student aid community to develop revised total and permanent disability forms. We are interested in the suggestion that a single standardized discharge application form be developed for use in all three of the title IV student loan programs.

Change: None.

Comment: One commenter recommended that during the time required for the medical reviews of the disability claim, borrowers should be granted an automatic forbearance on payments. This would eliminate the need to require return of payments made on the loan after the onset of the disability at the end of the conditional discharge period.

Discussion: The regulations provide for a suspension of payments after the borrower submits the physician's certification, or the letter from a physician requesting additional time to

make a certification. We believe that this will serve the same purpose as a forbearance.

Change: None.

Comment: Several commenters recommended that §§ 674.61(b)(5) and 682.402(c)(11), be revised by replacing ''due and payable'' with ''due and payable to the Secretary'' to clearly advise the borrower that, despite the disability denial, the Secretary retains ownership of the loan.

One commenter proposed additional language: ''The notice must identify the address where payments are to be sent.''

Discussion: We do not believe that it is necessary to include this level of operational detail in the regulation.

Changes: None

Comment: Several commenters recommended that §§ 674.61(b)(4) and 682.402(c)(8) be revised to make the Department responsible for informing the borrower of the borrower's rights and responsibilities, as well as who the borrower should contact in the future.

Discussion: We disagree. The first notification to a borrower that his or her loan has been assigned to us comes from the lender for FFEL or from the school for Perkins. At that point, the borrower will want to know the next steps for being granted a disability discharge. We believe that the lender or school that already has been in contact with the borrower concerning the discharge request should provide specific, detailed information about the disability discharge process with the notification of assignment.

Change: None.

Comment: Several commenters recommended that we revise § 682.402(c)(3) to provide for a 60-day suspension of collection activities upon notification by the borrower that the borrower claims to be totally and permanently disabled, or upon receipt of a physician's letter to request additional time to determine if the borrower is totally and permanently disabled.

Discussion: The regulations provide for a suspension of collection activity after receipt of the physician's certification or letter. We do not believe that there should be a suspension of collection activity for the period when the borrower is obtaining the documentation needed to support the claim of a total and permanent disability. However, if the lender believes that the borrower's circumstances warrant a period of forbearance, while the borrower is obtaining supporting documentation, the lender is free to grant such a forbearance.

Change: None.

Comment: Several commenters recommended that we revise §§ 682.402(c)(4)(i) and (ii) and 682.402(c)(6)(i) and (ii) to say that the lender or guaranty agency has determined that the documentation ''appears'' to support the borrower's claim. The commenters suggested that this language is needed because, while the lender or guaranty agency may believe, based on its own expertise and review criteria, that the documentation supports a discharge, we will make the actual determination to grant the conditional discharge.

Discussion: We disagree with this recommendation. Loan holders and guarantors are required to thoroughly review the applications and make determinations of eligibility for disability discharges based upon the application and any supporting medical documentation. Adding the word ''appears'' undercuts the sense that lenders and guaranty agencies are responsible for making appropriate decisions.

Change: None.

Comment: Several commenters recommended that in § 682.402(c)(5) we replace ''* * * from the date the lender received the physician's letter requesting additional time * * *'' with ''* * * from the date collection activity was suspended * * *'' These commenters suggested that this language was needed to cover all situations in which collection may have been suspended, not just for situations in which a physician has requested additional time.

Discussion: We agree with the commenters.

Change: We have revised § 682.405(c)(5) to specify that the forbearance period begins from the date collection activity was suspended.

Comment: Several commenters requested that we add a sentence to § 682.402(c)(7) authorizing the lender to grant forbearance for the period during which collection activities were not performed in cases when the guaranty agency does not pay a disability claim and returns the claim to the lender.

Discussion: We agree with the commenters' recommendation.

Change: We have revised § 682.402(c)(7) to authorize forbearance as requested in the comments.

Comment: Several commenters recommended that we revise § 682.402(c)(10) as follows: ''The guaranty agency must assign the loan to the Secretary after the guaranty agency pays the disability claim. Upon assignment of a loan to the Secretary under this section, the Secretary assumes all obligations, responsibilities, and liabilities associated with that loan.'' The commenter suggested that this language should replace the cross-reference to § 682.409 in the proposed regulation, which addresses subrogation rules that are not applicable to disability discharges. The commenter recommended that assignment of a loan for determination of eligibility for a conditional discharge should occur immediately after claim payment to the lender by the guaranty agency rather than waiting for the payment of reinsurance so that we may immediately evaluate the borrower's request for a disability discharge.

Discussion: We agree that the assignment of these accounts should take place immediately after the agency's determination and notice to the borrower. However, we do not agree that the regulations need to specify the Secretary's responsibilities in this process.

Change: We have revised § 682.409(c)(10), which we have renumbered as § 682.409(c)(11), to direct the guaranty agency to assign disability accounts to us immediately following the agency's payment of a lender's claim.

Comment: Several commenters requested that we add a sentence to § 682.402(c)(12) specifying the contents of the notice the Secretary sends to the borrower. Paragraphs (c)(12) and (c)(16) both provide guidance regarding the Secretary's notification to a borrower. They recommended that we merge the information in (c)(16) with the information in (c)(12) to more clearly state in one paragraph the information provided when the borrower is notified that the loan is conditionally discharged.

Discussion: We agree with this change.

Change: We have revised § 682.402(c)(12), which we have renumbered as § 682.409(c)(13), in accordance with the commenter's suggestion.

Comment: One commenter representing doctors of podiatric medicine noted that the SSA recently amended its regulations by adding licensed podiatrists as acceptable medical sources for establishing medical impairments of the foot, or foot and ankle. Given this development, the commenter requested that we change the definition of ''totally and permanently disabled'' to allow doctors of podiatric medicine, within their scope of practice as defined by State law, to certify that a borrower is totally and permanently disabled for the purpose of a loan discharge.

Discussion: Our long-standing policy has been that the only physicians authorized to certify that a borrower is totally and permanently disabled for the purpose of a loan discharge are doctors of medicine or osteopathy. In light of the other significant changes we are making to the process for evaluating requests for discharges on total and permanent disability we are not willing, at this time, to consider an expansion of the categories of medical professionals who can certify a borrower's request for a discharge. However, we will monitor the types of disabilities that lead to requests for a discharge and may decide to revise the regulations to increase the categories of medical professionals in the future. Of course, a doctor of podiatric medicine who meets State law requirements as a doctor of medicine may certify the borrower's application.

Change: None.

Sections 674.61(b)(1), (b)(6), and (b)(7), 682.402(c)(1), (c)(12), and (c)(13), and 685.213(a)(1) and (d) Conditional Discharge

Comment: Many commenters recommended that we revise §§ 674.61(b)(1), 674.61(b)(6), 682.402(c)(1)(i) by using the term, ''from the date the physician determined the borrower to be totally and permanently disabled'' instead of ''onset of the disability.'' The commenters pointed out that the onset date of the disability is not the date on which the discharge is based, rather it is the date the physician determines the borrower is totally and permanently disabled. In many cases, the onset of the disability could occur many years in the past. Therefore, the begin date of the conditional period should be clarified as the date the borrower became totally and permanently disabled.

Discussion: We agree that the three-year conditional discharge period should begin on the date the borrower became totally and permanently disabled as certified by a physician. However, the language suggested by the commenters could be interpreted to mean that the conditional discharge period begins on the date of the doctor's certification. We have revised the regulations to clarify that the conditional discharge period begins on the date that the borrower became totally and permanently disabled.

Change: We have revised the language as stated.

Comment: Several commenters recommended that we reduce the length of the conditional period from three years to two years. Another commenter suggested that the three years is too short. Another suggested that we conduct additional research to determine if three years is an appropriate length of time. One commenter requested that we clarify whether our use of the term ''up to three years'' means that we would grant conditional discharges for shorter periods.

Discussion: We believe that three years is an appropriate length of time for the conditional discharge period. The term ''up to three years'' is intended to make it clear that we can terminate a conditional discharge at any time, if we become aware that a borrower no longer meets the eligibility criteria for a discharge. We do not intend to grant conditional discharges for shorter time periods than three years.

Change: None.

Comment: One commenter noted that if the total and permanent disability onset date is more than three years prior to the disability review, the borrower would have already exhausted the conditional discharge period and our final determination on the borrower's discharge application would be based on data with regard to the borrower's income in the past. The commenter suggested that we change the regulations to reflect this fact.

Discussion: The conditional discharge period begins on the date the borrower became totally and permanently disabled. The commenter is correct in noting that in some cases three years could have already elapsed before a borrower applies for a disability discharge. In those cases, determination of eligibility for a final discharge would be based on data from the prior three years and would be made immediately upon assignment of the account to us.

Change: The regulations have been changed to clarify that some or all of the three-year conditional period could occur before the initial determination of eligibility for discharge.

Sections 674.61(b)(2), (8), and (9), 682.402(c)(14) and (15), and 685.213(a)(2) and (c) Final Determination of Total and Permanent Disability

Comment: Some commenters argued that a borrower should be able to have annual earnings above the poverty line for a family of two without losing eligibility for a final disability discharge. These commenters argued that the income limit is too low, and is not a fair measure of a borrower's eligibility for a disability discharge. One commenter suggested using 150 percent of the poverty line. Other commenters felt that the poverty line was an adequate measurement.

Discussion: We disagree that the maximum earnings level in the proposed regulations is too low. By definition, a borrower who is totally and permanently disabled is unable to work and earn money. The regulations allow a borrower to work and earn a modest amount so that borrowers are not discouraged from attempting to return to work during the conditional discharge period. We believe that any earnings above a very modest amount indicate that a borrower is able to work and earn money, and should disqualify the borrower from receiving a final discharge of his or her loan.

Change: None.

Comment: Several commenters objected to the provision in the regulations that denies a borrower a final discharge if the borrower takes out a title IV loan during the conditional discharge period. They felt this was unfair, because a borrower who returns to school without taking out additional title IV loans would continue to qualify for a final discharge.

Discussion: A borrower whose loan has been conditionally discharged due to total and permanent disability cannot receive another title IV loan unless a physician certifies that the borrower is capable of substantial gainful activity. A borrower who is capable of substantial gainful activity is able to work and earn money. In addition, a borrower who takes out a new loan agrees to pay it back, which means that the borrower expects to have earnings. We believe that such a borrower does not qualify for a discharge.

Change: None.

Comment: Several commenters had concerns about how we will verify a borrower's income for purposes of determining the borrower's ultimate qualification for a discharge. One commenter pointed out that commonly used measuring devices such as tax returns and W–2 forms measure income on a calendar-year basis. This commenter noted that using calendar year income may put a borrower claiming disability at the beginning of the year at a disadvantage compared to a borrower claiming disability at the end of the year. Several commenters recommended that we not use calendar year income to measure a borrower's earnings. Instead, they recommended that we use income over a 12-month period.

Some commenters recommended that we measure income on a calendar-year basis because attempting to measure income over a period not in common usage might lead to a lack of clarity and consistency.

Discussion: We agree that the income measurement should be based on three 12-month periods starting on the date the borrower became totally and permanently disabled. However, we do not agree that the term ''annual income'' in the regulation limits us to measuring income on a calendar-year basis.

Change: None.

Comment: One commenter recommended that we require borrowers to notify us if the borrower earns money above the income limits after a final disability discharge has been granted. The commenter noted that advances in medical technology may ease a disability previously deemed total and permanent.

Discussion: As with the current regulations, a borrower is not obligated to make payments on a discharged loan, even if the borrower's medical status improves. We believe that the three-year conditional discharge period is an adequate length of time to determine if a borrower's medical condition will improve sufficiently to no longer meet the criteria for a total and permanent disability discharge. Once the borrower meets all of the criteria for a final discharge of his or her loan, the borrower should not be required to continue reporting on his or her status to us.

Change: None.

Comment: Several commenters recommended that we revise § 682.402(c)(1)(ii)(B) to provide an exception for consolidation loans. The commenters believe that a borrower who consolidates loans that have not been conditionally discharged should not be precluded from having the conditionally discharged loans discharged at the end of the conditional discharge period.

Discussion: We agree, as long as the borrower is not including a conditionally discharged loan in the consolidation loan.

Change: We have revised §§ 674.61(b)(2)(ii), 682.402(c)(1)(ii)(B), and 685.213(c)(2) to provide an exception for consolidation loans. We have also clarified that a borrower may not consolidate a loan while it is in a conditional discharge period.

Comment: One commenter recommended that we add a new paragraph to § 682.402(c)(1)(ii) stating that a borrower is not considered disabled if the borrower was ''otherwise determined not to be totally and permanently disabled'' by the Secretary. The commenter cites language in the preamble to the proposed regulations indicating that the Secretary might refuse a final discharge based on other criteria not specified in the regulations.

Discussion: The language in the preamble was intended to account for incidents of fraud, and was not meant to suggest that we would deny the discharge of a loan based on criteria other than what is specified in the regulations. However, it is not necessary to restate in this section of the regulations our authority to revoke a discharge due to fraud.

Change: None.

Comment: Several commenters recommended that we revise § 682.402(c)(1)(iii) as follows: ''Except as provided in paragraph (c)(1)(iv)(A) of this section, a borrower is not considered totally and permanently disabled based on a condition that existed at the time the loan was made unless the borrower's condition substantially deteriorated * * *'' The revision is consistent with proposed regulations in which the borrower's disability date is compared to the date the loan is made, rather than the date the borrower applied for the loan.

Discussion: We agree with the commenters' recommendation.

Changes: We have revised § 682.402(c)(1)(iii) in accordance with the commenters' recommendation. We have also made corresponding changes in § 685.213(a)(4) of the Direct Loan regulations. There is no need to make a change to the Perkins regulations.

Sections 674.61(b)(11) and (12), 682.402(r)(2) and (3), 685.212(g)(2) Payments Received After the Onset of the Disabling Condition

Comments: Several commenters recommended that we revise §§ 674.61(b)(12) and 682.402(r)(3) by deleting ''100 percent of'' and replacing ''* * * any payments received, directly or indirectly, from or on behalf of the borrower'' with ''* * * any payments received on the loan after the date the borrower became totally and permanently disabled.'' The commenters believed that this language clarified that when the final discharge is granted, only those payments made after the date the borrower became totally and permanently disabled should be returned.

Discussion: We agree.

Changes: We have revised §§ 674.61(b)(12) and 682.402(r)(3) in accordance with the commenter's suggestion.

Comment: Several commenters recommended that we revise § 674.61(b)(1) by adding the following sentence: ''The institution shall not refund a repayment made during a period for which the borrower qualified for a total and permanent disability discharge unless the borrower made a payment due to an institutional error.'' These commenters recommend that only those payments made after the date the institution approved the preliminary disability discharge should be returned after the final discharge is granted.

Discussion: In many cases a borrower will make payments between the time he or she became totally and permanently disabled, and the time the conditional discharge was granted. Borrowers do not always apply for a discharge immediately after becoming totally and permanently disabled. It would be unfair to penalize a borrower for keeping current on his or her payments prior to applying for a discharge. We also believe the handling of payments received from disabled borrowers should be consistent across the three title IV student loan programs.

Changes: None.

Comment: Several commenters recommended that we revise §§ 674.61(b)(11) and 682.402(r)(2) by deleting the language which requires the institution or the guaranty agency to notify the borrower that there is no obligation to make payments on the loan while it is conditionally discharged. These commenters pointed out that the institution or guaranty agency will not know the borrower's loan status after the loan has been assigned to us. Without this information, the institution's notification to the borrower may be confusing or inaccurate. The notification could be contradictory if we had removed the loan from a conditional discharge status and placed it into repayment.

Discussion: Both §§ 674.61(b)(11) (which has been renumbered § 674.61(b)(10)) and 682.402(r)(2) specify that the notice must tell borrowers not to make payments ''unless the Secretary directs the borrower otherwise.'' We believe that loan holders and GAs should make it clear in their notices that we may instruct the borrower to resume making payments.

Change: None.

Comment: Several commenters recommended that we revise §§ 674.61(b)(12) and 682.402(r)(3) by replacing ''sender'' with ''borrower'' or ''borrower's representative.'' They noted that it is not easy to determine who may have sent a payment on an account, especially up to three years after the fact. The sender may be a lender or GA that is forwarding the payment to us. Lenders and GAs may be required to process a payment received from a borrower and forward their own cashier's check to us to create an audit trail of payments received.

Discussion: Other provisions of the regulations refer to ''sender'' not ''borrower.'' The regulations retain the word ''sender'' to maintain consistency.

Change: None.

Comment: Several commenters objected to the provisions in §§ 674.61(b)(12) and 682.402(r)(3) which provide for keeping payments for a three-year period. They recommend refunding payments made by the borrower after the onset of the disability at the time of our determination of the borrower's eligibility for conditional discharge, not at the end of the conditional discharge period three years later.

Discussion: Until the discharge is finalized, collection activity may resume on the loan. As a result, we feel that it sends the wrong signal to borrowers to return payments prior to the final discharge. In order to avoid prematurely giving borrowers the impression that their loan has been discharged, we will wait until the final discharge before refunding payments.

Change: None.

Comment: Several commenters recommended revising § 682.402(c)(13)(i) to read ''Is not required to make payments on the loan.'' The paragraph states that a borrower is not required to make payments from the date the Secretary makes the conditional discharge determination. However, the suspension of collection activities actually begins earlier (upon receipt of the documentation identified in § 682.402(c)(3)).

Discussion: We agree that the language in § 682.402(c)(13)(i) is unnecessary and possibly confusing.

Change: We have revised § 682.402(c)(13)(i) (which has been renumbered as § 682.402(c)(14)(i)) to clarify that payments need not be made from the date of suspension of collection activities.

Comment: Several commenters recommend revising § 682.402(c) by adding a new paragraph (c)(9) as follows: ''After receiving a claim payment from the guaranty agency, the lender shall forward to the guaranty agency any payments subsequently received from or on behalf of the borrower.'' The commenters noted that paragraph (c) does not address the disposition of borrower payments received by the lender after the date of total and permanent disability.

Discussion: We agree.

Change: We have revised § 682.402(c) in accordance with the commenter's suggestion.

Sections 674.9, 682.201, and 685.200 Borrower Eligibility for Title IV Loans

Comment: Section 682.201(a)(5) provides that a borrower who has a loan in a conditional discharge status is not eligible to receive a new title IV loan until the suspension of collection activity has been lifted on the conditionally discharged loan. Many commenters suggested that this requirement would cause unnecessary delays in loan processing, since a school, lender, or guaranty agency generally may not know if collection activity has resumed on a conditionally discharged loan. The commenters suggested that resumption of collection activity should be included in the regulations only as a consequence of receiving a new loan during the conditional discharge period, rather than as a condition of eligibility for a new loan. Other commenters recommended that § 682.201(a)(5) be replaced by a new provision requiring, as a condition of eligibility for a new loan, that a borrower sign a statement acknowledging that collection activity will resume on any conditionally discharged loan.

Discussion: A borrower who receives a new title IV loan while a previous loan is in a conditional discharge period is no longer considered to be totally and permanently disabled, and therefore is responsible for repaying the conditionally discharged loan. To emphasize the importance of this repayment obligation, we believe that collection activity must resume on a conditionally discharged loan before the borrower receives a new loan, as opposed to simply having the borrower acknowledge that collection activity will resume. The means by which a school, lender, or guaranty agency will know that collection activity has resumed is an operational issue that will be addressed as we implement the new regulations.

While we do not agree that § 682.201(a)(5) should be removed, we do support the commenters' suggestion that a borrower be required to acknowledge in writing that collection activity will resume on any conditionally discharged loan.

Change: Sections 674.9(i), 682.201(a)(7), and 685.200(a)(1)(iv)(C) have been amended to include a provision requiring a borrower to sign a statement acknowledging that he or she understands that collection activity will resume on a conditionally discharged loan if the borrower applies for a new loan.

Sections 674.5, 674.9, 674.51, and 674.61 Federal Perkins Loan Program

Comment: Several commenters stated that defaulted borrowers whose Perkins loans have been conditionally discharged should not be included in the institution's cohort default rate for Perkins Loans. They recommended that we amend § 674.5(c)(3)(ii) by adding the following subsection: ''(E) Assigned to and conditionally discharge by the Secretary in accordance with Section 674.61(b).''

Discussion: We agree with the commenters.

Change: Section 674.5(c)(3)(ii) has been revised to specify that defaulted Perkins Loans assigned to and conditionally discharged by the Secretary are excluded from an institution's Perkins Loan cohort default rate.

Comment: Several commenters recommended that for the Perkins Loan Program we use the term ''cancelled'' rather than discharged in § 674.61(b)(1). Under the current Perkins Loan regulations, a borrower's loan may be ''cancelled'' due to his or her disability and the commenters preferred to retain this language. The commenters argued that the amount of the discharge is recorded as a cancellation on the institution's general ledger and on the FISAP, and that a change in the term would require institutions to make changes to their accounting records and may cause confusion on the FISAP.

Discussion: As reflected in these regulations, the standard for and treatment of loans made to borrowers who become totally and permanently disabled is consistent across the Perkins Loan, FFEL and Direct Loan programs. To avoid confusion among borrowers and others, we believe that the language across all of the title IV loan programs should be consistent. The term ''discharge'' is more widely used and we will use that term for all three programs. We will revise the FISAP to reflect the change in terminology as soon as practicable. We do not believe that this change in terminology should cause any significant changes in a school's accounting records since the effect of the discharge does not change.

Change: None.

Comment: Several commenters recommended that the proposed regulations not apply to the Perkins Loan Program because the OIG's report was based on a review of FFEL program loans and there is no evidence of similar abuse in the Perkins Loan Program. The commenters noted that schools participating in the Perkins Loan Program already have a powerful

financial incentive to prevent inappropriate disability discharges. Unlike lenders and GAs in FFEL, schools which make Perkins Loans are not reimbursed for loans cancelled due to total and permanent disability.

One commenter reported that currently even the largest colleges and universities receive only a handful of disability claims a year and that the Perkins Loan Program has not experienced the same increase in disability claims as the FFEL program in recent years.

Another commenter indicated that they, in fact, expect the number of applicants for disability discharges in the Perkins Loan Program to increase under the new rule. The commenter believes that borrowers will dispute school denial of discharges and force schools to assign the account to the Department.

Many commenters from schools in the Perkins Loan Program also expressed concern that the proposed regulations will compromise their ability to interact with disabled students and their families in a flexible manner.

Discussion: We believe that since many students receive assistance from both the Perkins Loan and either FFEL or Direct Loans and the same disabled borrower is likely to apply for discharge of all of his or her loans, the problems uncovered in the FFEL program are likely to exist in the Perkins and Direct Loan Programs. We also believe that since the Perkins Loan Program use the same definition of totally and permanently disabled and the same disability discharge process as the FFEL and Direct Loan Programs, any changes to the process must apply to the Perkins Loan Program to ensure that borrowers in all of the title IV loan programs are treated fairly.

We disagree with the commenter who speculated that the regulations will increase the number of Perkins Loan disability discharges. Schools will still have the responsibility to review disability discharge requests and the supporting documentation and will have the same financial incentives to prevent inappropriate disability discharges. Except for the assignment requirement, the regulations will not require any changes to a school's current process for reviewing and approving or denying disability discharge requests. Therefore, we do not believe that the regulations will prevent schools from interacting with students in a flexible manner.

Change: None.

Comment: Several commenters had raised issues relating to the assignment process for Perkins Loans on which a borrower requests a discharge. Several commenters noted that the requirement in § 674.61(b)(3) that a Perkins loan approved for a disability discharge be assigned to us conflicts with the current assignment regulations in § 674.50, which allow an institution to submit only a defaulted loan for assignment. They also pointed out that § 674.50(e)(4) provides that the Secretary will not accept assignment of a loan where the borrower ''has filed for or been granted cancellation due to permanent and total disability.''

Some commenters agreed with our proposal to require a school to assign Perkins loans to us after it approves the borrower's disability claim. Other commenters argued that the loan should stay with the institution. One commenter recommended that we reimburse the institution for the loan. Another suggested that we return the loan to the institution if we deny the disability claim.

Other commenters were concerned that a loan assigned to us would be subject to an initial review and could be rejected. They recommended that § 674.61(b)(3) be revised to require the school to ''* * * automatically and irrevocably assign the loan to the Secretary * * *''

Several commenters recommended that the assignment process for these loans should be simplified. The current assignment process is voluntary. They argued that it is not appropriate to require mandatory assignment of accounts on which the borrower has requested a disability discharge. They recommended that a special assignment process be developed for disability discharges.

Discussion: We agree that the reference to § 674.50 mentioned by the commenters is inaccurate. We do not agree with the suggestion that the addition of the phrase ''automatically and irrevocably'' to § 674.61(b)(3) is necessary but plan to work with the schools that participate in the Perkins Loan Program to develop a simplified assignment process for disability accounts.

Change: We have removed the reference to § 674.50.

Executive Order 12866

We have reviewed these final regulations in accordance with Executive Order 12866. Under the terms of the order we have assessed the potential costs and benefits of this regulatory action.

The potential costs associated with the final regulations are those resulting from statutory requirements and those we have determined to be necessary for administering these programs effectively and efficiently. Elsewhere in this **SUPPLEMENTARY INFORMATION** section, we identify and explain any burdens specifically associated with information collection requirements. See the heading Paperwork Reduction Act of 1995.

In assessing the potential costs and benefits—both quantitative and qualitative—of these final regulations, we have determined that the benefits of the regulations justify the costs.

We have also determined that this regulatory action does not unduly interfere with State, local, and tribal governments in the exercise of their governmental functions.

We summarized the potential costs and benefits of these final regulations in the preamble to the NPRM (65 FR 47639). Based on the expectation that all provisions would be effective July 1, 2001, we estimated a savings of $72 million over FY 2001–2005 as a result of borrowers who would have received a discharge losing eligibility during the three-year conditional period. The final regulations include a one-year delay in implementing the conditional discharge provisions for total and permanent disability. Therefore, under the final regulations the Department estimates a revised savings of $59 million over FY 2001–2005.

Paperwork Reduction Act of 1995

The Paperwork Reduction Act of 1995 does not require you to respond to a collection of information unless it displays a valid OMB control number. We display the valid OMB control numbers assigned to the collections of information in these final regulations at the end of the affected sections of the regulations.

Assessment of Educational Impact

In the NPRM we requested comments on whether the proposed regulations would require transmission of information that any other agency or authority of the United States gathers or makes available.

Based on the response to the NPRM and our review, we have determined that these final regulations do not require transmission of information that any other agency or authority of the United States gathers or makes available.

Electronic Access to This Document

You may view this document, as well as all other Department of Education documents published in the **Federal Register**, in text or Adobe Portable Document Format (PDF) on the Internet at either of the following sites:

http://ocfco.ed.gov.fedreg.htm
http://www.ed.gov/news.html

To use PDF you must have Adobe Acrobat Reader, which is available free at either of the previous sites. If you have questions about using PDF, call the U.S. Government Printing Office (GPO), toll free, at 1–888–293–6498; or in the Washington, DC, area at (202) 512–1530.

Note: The official version of this document is the document published in the **Federal Register**. Free internet access to the official edition of the **Federal Register** and the Code of Federal Regulations is available on GPO Access at: http://www.access.gpo.gov/nara/index.html

(Catalog of Federal Domestic Assistance Numbers: 84.032 Federal Family education Loan Program; 84.037 Federal Perkins Loan Program; and 84.268 William D. Ford Federal Direct Loan Program)

List of Subjects in 34 CFR Part 674, 682, and 685

Administrative practice and procedure, Colleges and universities, Education, Loan programs-education, Reporting and recordkeeping requirements, Student aid, Vocational education.

Dated: October 25, 2000.

Richard W. Riley,

Secretary of Education.

For the reasons discussed in the preamble, the Secretary amends parts 674, 682, and 685 of Title 34 of the Code of Federal Regulations as follows:

PART 674—FEDERAL PERKINS LOAN PROGRAM

1. The authority citation for part 674 continues to read as follows:

Authority: 20 U.S.C. 1087aa–1087ii and 20 U.S.C. 421–429, unless otherwise noted.

2. Section 674.5 is amended by removing ''or'' at the end of paragraph (c)(3)(i)(D); removing the period at the end of paragraph (c)(3)(i)(E) and adding, in its place ''; or'' and adding a new paragraph (c)(3)(ii)(F) to read as follows:

§ 674.5 Federal Perkins Loan Program cohort default rate and penalties.

* * * * *

(c) * * *

(3) * * *

(ii) * * *

(F) Assigned to the Secretary in accordance with § 674.61(b).

3. Section 674.9 is amended by:

A. Removing the period at the end of paragraph (h)(2) and adding in its place ''; and'.

B. Adding a new paragraph (h)(3).

C. Redesignating paragraphs (i) and (j) as paragraphs (k) and (l), respectively.

D. Adding a new paragraph (i).

E. Adding a new paragraph (j).

The additions and revisions read as follows:

§ 674.9 Student eligibility.

* * * * *

(h)(3) In the case of a borrower whose previous loan under title IV of the HEA was discharged due to a total and permanent disability on or after July 1, 2001 and before July 1, 2002, meets the requirements of (h)(1) and (h)(2) of this section. If the borrower receives another loan within three years from the date the borrower became totally and permanently disabled, as certified by the physician, the borrower must reaffirm the previously discharged loan.

(i) In the case of a borrower whose previous loan under title IV of the HEA was conditionally discharged based on an initial determination that the borrower was totally and permanently disabled, the borrower must—

(1) Comply with the requirements of paragraphs (h)(1) and (h)(2) of this section; and

(2) Sign a statement acknowledging that—

(i) The loan that has been conditionally discharged prior to a final determination of total and permanent disability cannot be discharged in the future on the basis of any impairment present when the borrower applied for a total and permanent disability discharge or when a new loan is made, unless that impairment substantially deteriorates; and

(ii) Collection activity will resume on any loan in a conditional discharge period, as described in § 674.61(b)(9).

(j) Does not have any loans under title IV of the HEA on which collection activity has been suspended based on a conditional determination that the borrower was totally and permanently disabled. If a borrower applies for a loan under title IV of the HEA during the conditional discharge period described in §§ 674.61(b), 682.402(c), or 685.213(a), the suspension of collection activity must be ended before the borrower becomes eligible to receive any additional loans.

* * * * *

3. Section 674.51 is amended by adding a new paragraph (s) to read as follows:

§ 674.51 Special definitions.

* * * * *

(s) *Total and permanent disability:* The condition of an individual who is unable to work and earn money because of an injury or illness that is expected to continue indefinitely or result in death.

* * * * *

4. Section 674.61 is amended by:

A. Revising the section heading.

B. Revising paragraph (a).

C. Revising paragraph (b).

The revisions read as follows:

§ 674.61 Discharge for death or disability.

(a) *Death.* An institution must discharge the unpaid balance of a borrower's Defense, NDSL, or Perkins loan, including interest, if the borrower dies. The institution must discharge the loan on the basis of an original or certified copy of the death certificate. Under exceptional circumstances and on a case-by-case basis, the chief financial officer of the institution may approve a discharge based upon other reliable documentation supporting the discharge request.

(b) *Total and permanent disability.* (1) If the Secretary has made an initial determination that the borrower is totally and permanently disabled, as defined in § 674.51(s), the loan is conditionally discharged for up to three years from the date that the borrower became totally and permanently disabled, as certified by a physician. The Secretary suspends collection activity on the loan from the date of the initial determination of total and permanent disability until the end of the three-year conditional period. If the borrower satisfies the criteria for a total and permanent disability discharge during and at the end of the conditional discharge period, the balance of the loan is discharged at the end of the conditional discharge period and any payments received after the date the borrower became totally and permanently disabled as certified under § 674.61(b)(3) are returned to the sender.

(2) A borrower satisfies the criteria for a discharge of a loan based on a total and permanent disability if, during and at the end of the three-year conditional discharge period described in paragraph (b)(1) of this section—

(i) The borrower's annual earnings from employment do not exceed 100 percent of the poverty line for a family of two, as determined in accordance with the Community Service Block Grant Act; and

(ii) The borrower does not receive a new loan under the Perkins, FFEL or Direct Loan programs, except for a FFEL or Direct Consolidation Loan that does not include any loans that are in a conditional discharge status.

(3) If a borrower becomes totally and permanently disabled after receiving a Defense, NDSL, or Perkins loan, the institution must assign the loan to the Secretary if the borrower submits a certification by a physician and the institution reviewed the application and

determined that it is complete and that it supports the conclusion that the borrower has a total and permanent disability as defined in § 674.51(s).

(4) At the time the loan is assigned to the Secretary the institution must notify the borrower that the loan has been assigned to the Secretary for determination of eligibility for a total and permanent disability discharge.

(5) If the Secretary determines that the certification provided by the borrower does not support the conclusion that the borrower meets the criteria for a total and permanent disability discharge, the Secretary notifies the borrower that the application for a disability discharge has been denied, and that the loan is due and payable under the terms of the promissory note.

(6) If the Secretary makes an initial determination that the borrower is totally and permanently disabled, the Secretary notifies the borrower that the loan will be in a conditional discharge status for a period of up to three years after the date the borrower became totally and permanently disabled as certified under § 674.61(b)(3). This notification identifies the conditions of the conditional discharge period specified in paragraphs (b)(6) through (b)(9) of this section and specifies that all or part of the three-year period may predate the Secretary's initial determination.

(7) During the conditional discharge period, the borrower—

(i) Is not required to make any payments on the loan;

(ii) Is not considered past due or in default on the loan, unless the loan was past due or in default at the time the conditional discharge was granted;

(iii) Must promptly notify the Secretary of any changes in address or phone number;

(iv) Must promptly notify the Secretary if the borrower's annual earnings from employment exceed the amount specified in paragraph (b)(2)(i) of this section; and

(v) Must provide the Secretary, upon request, with additional documentation or information related to the borrower's eligibility for discharge under this section.

(8) If, during and at the end of the conditional discharge period, the borrower continues to satisfy the eligibility criteria for a total and permanent disability discharge, as described in paragraph (b)(2) of this section, the balance of the loan is discharged.

(9) If, at any time during or at the end of the three-year conditional discharge period, the borrower does not continue to meet the eligibility requirements for total and permanent disability discharge, the Secretary resumes collection activity on the loan. The Secretary does not require the borrower to pay any interest that accrued on the loan from the date of the initial determination described in paragraph (b)(6) of this section through the end of the conditional discharge period.

(10) If the institution receives any payments from or on behalf of the borrower on or attributable to a loan that has been assigned to the Secretary for determination of eligibility for a total and permanent disability discharge, the institution must forward those payments to the Secretary for crediting to the borrower's account. At the same time that the institution forwards the payment, it must notify the borrower that there is no obligation to make payments on the loan while it is conditionally discharged prior to a final determination of eligibility for a total and permanent disability discharge, unless the Secretary directs the borrower otherwise.

(11) When the Secretary makes a final determination to discharge the loan, the Secretary returns to the sender any payments received on the loan after the date the borrower became totally and permanently disabled.

* * * * *

PART 682—FEDERAL FAMILY EDUCATION LOAN (FFEL) PROGRAM

5. The authority citation for part 682 continues to read as follows:

Authority: 20 U.S.C. 1071 to 1087–2, unless otherwise noted.

6. In § 682.200(b) the definition of ''Totally and permanently disabled'' is revised to read as follows:

§ 682.200 Definitions.

* * * * *

(b) * * *

Totally and permanently disabled. The condition of an individual who is unable to work and earn money because of an injury or illness that is expected to continue indefinitely or result in death.

* * * * *

7. Section 682.201 is amended by:

A. Redesignating paragraphs (a)(5), (a)(6), and (a)(7) as paragraphs (a)(6), (a)(8), and (a)(9), respectively.

B. Adding a new paragraph (a)(5).

C. Adding a new paragraph (a)(6)(iii).

D. Revising redesignated paragraph (a)(6) introductory text and (a)(6)(i) and (ii).

E. Adding a new paragraph (a)(7).

The additions and revisions read as follows:

§ 682.201 Eligible borrowers.

(a) * * *

(5) The suspension of collection activity has been lifted from any loan on which collection activity had been suspended based on a conditional determination that the borrower was totally and permanently disabled under § 682.402(c).

(6) In the case of a borrower whose prior loan under title IV of the Act was discharged after a final determination of total and permanent disability, the student must—

(i) Obtain certification from a physician that the borrower is able to engage in substantial gainful activity;

(ii) Sign a statement acknowledging that the FFEL loan the borrower receives cannot be discharged in the future on the basis of any impairment present when the new loan is made, unless that impairment substantially deteriorates; and

(iii) In the case of a borrower whose previous loan under title IV of the Act was discharged due to a total and permanent disability on or after July 1, 2001 and before July 1, 2002, meets the requirements of paragraphs (a)(6)(i) and (a)(6)(ii) of this section. If the borrower receives another loan within three years from the date that the borrower became totally and permanently disabled, as certified by the physician, the borrower must reaffirm the previously discharged loan.

(7) In the case of a borrower whose prior loan under title IV of the HEA was conditionally discharged based on an initial determination that the borrower was totally and permanently disabled, the borrower must—

(i) Comply with the requirements of paragraphs (a)(6)(i) and (a)(6)(ii) of this section; and

(ii) Sign a statement acknowledging that—

(A) The loan that has been conditionally discharged prior to a final determination of total and permanent disability cannot be discharged in the future on the basis of any impairment present when the borrower applied for a total and permanent disability discharge or when the new loan is made unless that impairment substantially deteriorates; and

(B) Collection activity will resume on any loans in a conditional discharge period, as described in paragraph 682.402(c)(16).

* * * * *

8. Section 682.402 is amended by:

A. Revising paragraph (b)(2).

B. Revising paragraph (b)(3).

C. Revising paragraph (c)(1)(i).

D. Redesignating paragraphs (c)(1)(ii) and (c)(1)(iii) as paragraphs (c)(1)(iii) and (c)(1)(iv), respectively.

E. Adding a new paragraph (c)(1)(ii).

F. Revising redesignated paragraph (c)(1)(iii).

G. Amending redesignated paragraph (c)(1)(iv)(A) by removing the reference to paragraphs ''(c)(1)(i) and (ii)'' and adding, in its place, ''(c)(1)(i) through (iii)''.

H. Amending redesignated paragraph (c)(1)(iv)(B) by removing the reference to paragraph ''(c)(1)(iii)(A)'' and adding, in its place, ''(c)(1)(iv)(A)''.

I. Amending redesignated paragraph (c)(1)(iv)(B) by removing the reference to paragraphs ''(c)(1)(i) and (ii)'' and adding, in its place, ''(c)(1)(i) through (iii)''.

J. Amending redesignated paragraph (c)(1)(iv)(C) by removing the reference to paragraph ''(c)(1)(iii)(A)'' and adding, in its place, ''(c)(1)(iv)(A)''.

K. Revising paragraph (c)(2).

L. Revising paragraph (c)(3).

M. Redesignating paragraph (c)(4) as paragraph (c)(5).

N. Adding a new paragraph (c)(4).

O. Revising redesignated paragraph (c)(5).

P. Adding new paragraphs (c)(6) through (c)(16).

Q. Revising paragraph (g)(1)(iii).

R. Revising paragraph (k)(5)(i).

S. Redesignating paragraph (k)(5)(ii) as paragraph (k)(5)(iii).

T. Adding a new paragraph (k)(5)(ii).

U. Revising paragraph (r)(1).

V. Redesignating paragraphs (r)(2) and (r)(3) as paragraphs (r)(4) and (r)(5), respectively.

W. Adding a new paragraph (r)(2).

X. Adding a new paragraph (r)(3).

Y. Revising redesignated paragraph (r)(5).

The additions and revisions read as follows:

§ 682.402 Death, disability, closed school, false certification, unpaid refunds, and bankruptcy payments.

* * * * *

(b) * * *

(2) A discharge of a loan based on the death of the borrower (or student in the case of a PLUS loan) must be based on an original or certified copy of the death certificate. Under exceptional circumstances and on a case-by-case basis, the chief executive officer of the guaranty agency may approve a discharge based upon other reliable documentation supporting the discharge request.

(3) After receiving reliable information indicating that the borrower (or student) has died, the lender must suspend any collection activity against the borrower and any endorser for up to 60 days and promptly request the documentation described in paragraph (b)(2) of this section. If additional time is required to obtain the documentation, the period of suspension of collection activity may be extended up to an additional 60 days. If the lender is not able to obtain an original or certified copy of the death certificate or other documentation acceptable to the guaranty agency, under the provisions of paragraph (b)(2) of this section, during the period of suspension, the lender must resume collection activity from the point that it had been discontinued. The lender is deemed to have exercised forbearance as to repayment of the loan during the period when collection activity was suspended.

* * * * *

(c) * * *

(1)(i) If the Secretary has made an initial determination that the borrower is totally and permanently disabled, as defined in § 682.200(b), the loan is conditionally discharged for up to three years from the date that the borrower became totally and permanently disabled, as certified by a physician. The Secretary suspends collection activity on the loan from the date of the initial determination of total and permanent disability until the end of the conditional period. If the borrower satisfies the criteria for a total and permanent disability discharge during and at the end of the conditional discharge period, the balance of the loan is discharged at the end of the conditional discharge period and any payments received after the date the borrower became totally and permanently disabled as certified under § 682.402(c)(2), are returned to the sender.

(ii) A borrower satisfies the criteria for a discharge of a loan based on a total and permanent disability if, during and at the end of the three-year period described in paragraph (c)(1)(i) of this section—

(A) The borrower's annual earnings from employment do not exceed 100 percent of the poverty line for a family of two, as determined in accordance with the Community Service Block Grant Act; and

(B) The borrower does not receive a new loan under the Perkins, FFEL, or Direct Loan programs, except for a FFEL or Direct Consolidation loan that does not include any loans that are in a conditional discharge status.

(iii) Except as provided in paragraph (c)(1)(iv)(A) of this section, a borrower is not considered totally and permanently disabled based on a condition that existed at the time the loan was made unless the borrower's condition substantially deteriorated.

* * * * *

(2) After being notified by the borrower or the borrower's representative that the borrower claims to be totally and permanently disabled, the lender promptly requests that the borrower or the borrower's representative submit, on a form approved by the Secretary, a certification by a physician, who is a doctor of medicine or osteopathy and legally authorized to practice in a State, that the borrower is totally and permanently disabled as defined in § 682.200(b).

(3) The lender must continue collection activities until it receives either the certification of total and permanent disability from a physician or a letter from a physician stating that the certification has been requested and that additional time is needed to determine if the borrower is totally and permanently disabled. Except as provided in paragraph (c)(5) or (c)(7) of this section, after receiving the physician's certification or letter the lender may not attempt to collect from the borrower or any endorser.

(4) The lender must submit a disability claim to the guaranty agency if the borrower submits a certification by a physician and the lender makes a determination that the certification supports the conclusion that the borrower meets the criteria for a total and permanent disability discharge, as defined in § 682.200(b).

(5) If the lender determines that a borrower who claims to be totally and permanently disabled is not totally and permanently disabled, or if the lender does not receive the physician's certification of total and permanent disability within 60 days of the receipt of the physician's letter requesting additional time, as described in paragraph (c)(3) of this section, the lender must resume collection and is deemed to have exercised forbearance of payment of both principal and interest from the date collection activity was suspended. The lender may capitalize, in accordance with § 682.202(b), any interest accrued and not paid during that period.

(6) The guaranty agency must pay a claim submitted by the lender if the guaranty agency has reviewed the application and determined that it is complete and that it supports the conclusion that the borrower meets the criteria for a total and permanent disability discharge, as defined in § 682.200(b).

(7) If the guaranty agency does not pay the disability claim, the guaranty agency must return the claim to the lender with an explanation of the basis for the agency's denial of the claim. Upon receipt of the returned claim, the lender must notify the borrower that the application for a disability discharge has been denied, provide the basis for the denial, and inform the borrower that the lender will resume collection on the loan. The lender is deemed to have exercised forbearance of both principal and interest from the date collection activity was suspended until the first payment due date. The lender may capitalize, in accordance with § 682.202(b), any interest accrued and not paid during that period.

(8) If the guaranty agency pays the disability claim, the lender must notify the borrower that the loan will be assigned to the Secretary for determination of eligibility for a total and permanent disability discharge.

(9) After receiving a claim payment from the guaranty agency, the lender must forward to the guaranty agency any payments subsequently received from or on behalf of the borrower.

(10) The Secretary reimburses the guaranty agency for a disability claim paid to the lender after the agency pays the claim to the lender.

(11) The guaranty agency must assign the loan to the Secretary after the guaranty agency pays the disability claim.

(12) If the Secretary determines that the certification and information provided by the borrower do not support the conclusion that the borrower meets the criteria for a total and permanent disability discharge, the Secretary notifies the borrower that the application for a disability discharge has been denied, and that the loan is due and payable under the terms of the promissory note.

(13) If the Secretary makes an initial determination that the borrower is totally and permanently disabled, the Secretary notifies the borrower that the loan is conditionally discharged and that the conditional discharge period will last for up to three years after the date the borrower became totally and permanently disabled as certified under § 682.402(c)(2). The notification identifies the conditions of the conditional discharge period specified in paragraphs (c)(13) through (c)(16) of this section and specifies that all or part of the three-year period may predate the Secretary's initial determination.

(14) During the conditional discharge period, the borrower—

(i) Is not required to make any payments on the loan;

(ii) Is not considered delinquent or in default on the loan, unless the borrower was delinquent or in default at the time the conditional discharge was granted;

(iii) Must promptly notify the Secretary of any changes in address or phone number;

(iv) Must promptly notify the Secretary if the borrower's annual earnings from employment exceed the amount specified in paragraph (c)(1)(ii)(A) of this section; and

(v) Must provide the Secretary, upon request, with additional documentation or information related to the borrower's eligibility for discharge under this section.

(15) If, during and at the end of the conditional discharge period, the borrower continues to satisfy the eligibility criteria for a total and permanent disability discharge, as described in § 682.402(c)(1)(ii), the balance of the loan is discharged.

(16) If, at any time during the three-year conditional discharge period, the borrower does not continue to meet the eligibility requirements for a total and permanent disability discharge, the Secretary resumes collection activity on the loan. The Secretary does not require the borrower to pay any interest that accrued on the loan from the date of the initial determination described in paragraph (c)(13) of this section through the end of the conditional discharge period.

* * * * *

(g) * * *

(1) * * *

(iii) In the case of a death claim, an original or certified death certificate, or other documentation supporting the discharge request that formed the basis for the determination of death.

* * * * *

(k) * * *

(5) * * *

(i) For death or bankruptcy claims, the shorter of 60 days or the period from the date the guaranty agency determines that the borrower (or the student for whom a parent obtained a PLUS loan, or each of the co-makers of a PLUS loan) dies, or filed a petition for relief in bankruptcy until the Secretary authorizes payment;

(ii) For disability claims, the shorter of 60 days or the period from the date the guaranty agency makes a preliminary determination that the borrower became totally and permanently disabled until the Secretary authorizes payment; or

* * * * *

(r)(1) If the guaranty agency receives any payments from or on behalf of the borrower on or attributable to a loan that as been discharged in bankruptcy on which the Secretary previously paid a bankruptcy claim, the guaranty agency must return 100 percent of these payments to the sender. The guaranty agency must promptly return, to the sender, any payment on a cancelled or discharged loan made by the sender and received after the Secretary pays a closed school or false certification claim. At the same time that the agency returns the payment, it must notify the borrower that there is no obligation to repay a loan discharged on the basis of death, bankruptcy, false certification, or closing of the school.

(2) If the guaranty agency receives any payments from or on behalf of the borrower on or attributable to a loan that has been assigned to the Secretary for determination of eligibility for a total and permanent disability discharge, the guaranty agency must forward those payments to the Secretary for crediting to the borrower's account. At the same time that the agency forwards the payments, it must notify the borrower that there is no obligation to make payments on the loan while it is conditionally discharged prior to a final determination of eligibility for a total and permanent disability discharge, unless the Secretary directs the borrower otherwise.

(3) When the Secretary makes a final determination to discharge the loan, the Secretary returns to the sender any payments received on the loan after the date the borrower became totally and permanently disabled.

* * * * *

(5) If the guaranty agency has returned a payment to the borrower, or the borrower's representative, with the notice described in paragraphs (r)(1) or (r)(2) of this section, and the borrower (or representative) continues to send payments to the guaranty agency, the agency must remit all of those payments to the Secretary.

* * * * *

PART 685—WILLIAM D. FORD FEDERAL DIRECT LOAN PROGRAM

9. The authority citation for part 685 continues to read as follows:

Authority: 20 U.S.C. 1087a *et seq.*, unless otherwise noted.

10. Section 685.200 is amended as follows:

A. By revising paragraphs (a)(1)(iv)(A) and (B).

B. By adding new paragraph (a)(1)(iv)(C).

The revised and added text reads as follows:

§ 685.200 Borrower eligibility.

(a)(1) * * *

(iv)(A) In the case of a borrower whose prior loan under title IV of the Act was discharged after a final determination of total and permanent disability, the borrower—

(*1*) Obtains a certification from a physician that the borrower is able to engage in substantial gainful activity; and

(*2*) Signs a statement acknowledging that the Direct Loan the borrower receives cannot be discharged in the future on the basis of any impairment present when the borrower applied for a total and permanent disability discharge or when the new loan is made, unless that impairment substantially deteriorates.

(B) In the case of a borrower whose prior loan under title IV of the Act was discharged on or after July 1, 2001 and before July 1, 2002 after a final determination of total and permanent disability, the borrower—

(*1*) Complies with the requirements of paragraph (a)(1)(iv)(A) of this section; and

(*2*) If the borrower receives another loan within three years from the date that the borrower became totally and permanently disabled, as certified by the physician, reaffirms the previously discharged loan. For the purposes of this paragraph, reaffirmation means the acknowledgement of the loan by the borrower in a legally binding manner. The acknowledgement may include, but is not limited to, the borrower signing a new promissory note that includes the same terms and conditions as the original note signed by the borrower, making a payment on the loan, or signing a repayment agreement.

(C) In the case of a borrower whose prior loan under title IV of the Act was conditionally discharged based on an initial determination that the borrower was totally and permanently disabled—

(*1*) The suspension of collection activity on the prior loan has been lifted;

(*2*) The borrower complies with the requirement in paragraph (a)(1)(iv)(A)(*1*) of this section;

(*3*) The borrower signs a statement acknowledging that neither the prior loan nor the Direct Loan that the borrower receives may be discharged in the future on the basis of any impairment present when the borrower applied for a total and permanent disability discharge or when the new loan is made, unless that impairment substantially deteriorates; and

(*4*) The borrower signs a statement acknowledging that the suspension of collection activity on the prior loan will be lifted.

* * * * *

11. Section 685.212 is amended as follows:

A. By revising paragraph (a).

B. By revising paragraph (b).

C. By revising paragraph (g)(1).

D. By redesignating paragraph (g)(2) as (g)(3).

E. By adding a new paragraph (g)(2).

The additions and revisions read as follows:

§ 685.212 Discharge of a loan obligation.

(a) *Death.* (1) If a borrower (or the student on whose behalf a parent borrowed a Direct PLUS Loan) dies, the Secretary discharges the obligation of the borrower and any endorser to make any further payments on the loan based on an original or certified copy of the borrower's (or student's in the case of a Direct PLUS loan) death certificate.

(2) If an original or certified copy of the death certificate is not available, the Secretary discharges the loan only based on other reliable documentation that establishes, to the Secretary's satisfaction, that the borrower (or student) has died. The Secretary discharges a loan based on documentation other than an original or certified copy of the death certificate only under exceptional circumstances and on a case-by-case basis.

(b) *Total and permanent disability.* If a borrower meets the requirements in § 685.213(c), the Secretary discharges the obligation of the borrower and any endorser to make any further payments on the loan.

* * * * *

(g) * * *

(1) *For the discharge conditions in paragraphs (a), (c), (d), and (e) of this section.* Upon receipt of acceptable documentation and approval of the discharge request, the Secretary returns to the sender, or, for a discharge based on death, the borrower's estate, any payments received after the date that the eligibility requirements for discharge were met.

(2) *For the discharge condition in paragraph (b) of this section.* Upon making a final determination of eligibility for discharge based on total and permanent disability, the Secretary returns to the sender any payments received after the date the borrower became totally and permanently disabled, as certified under § 685.213(b).

* * * * *

12. A new § 685.213 is added to read as follows:

§ 685.213 Total and permanent disability discharge.

(a) *General.* (1) If the Secretary makes an initial determination that a borrower is totally and permanently disabled, the Secretary—

(i) Notifies the borrower that the loan will be in a conditional discharge status for up to three years from the date that the borrower became totally and permanently disabled, as certified under 685.213(b). The Secretary also notifies the borrower of the conditions of the conditional discharge period, and that all or part of the three-year conditional discharge period may predate the Secretary's initial determination.

(ii) Suspends any efforts to collect on the loan from the date of the initial determination described in paragraph (a)(1) of this section until the end of the conditional discharge period.

(2) If the borrower continues to meet the eligibility requirements for total and permanent disability discharge during and at the end of the three-year conditional discharge period, the Secretary—

(i) Discharges the obligation of the borrower and any endorser to make any further payments on the loan at the end of that period; and

(ii) Returns to the borrower any payments received after the date the borrower became totally and permanently disabled, as certified under § 685.213(b).

(3) If the borrower does not continue to meet the eligibility requirements for a total and permanent disability discharge at any time during or at the end of the three-year conditional discharge period, the Secretary resumes collection activity on the loan. The Secretary does not require the borrower to pay any interest that accrued on the loan from the date of the initial determination described in paragraph (a)(1) of this section through the end of the conditional discharge period.

(4) Except as provided in paragraph (e)(1) of this section, a borrower is not considered totally and permanently disabled based on a condition that existed at the time the loan was made, unless the borrower's condition substantially deteriorated after the loan was made so as to render the borrower totally and permanently disabled.

(b) *Initial determination of total and permanent disability.* The Secretary makes an initial determination that a borrower is totally and permanently disabled if the borrower (or the borrower's representative) provides the Secretary with a certification (on a form approved by the Secretary) by a physician who is a doctor of medicine or osteopathy and legally authorized to

practice in a State that the borrower is totally and permanently disabled as defined in 34 CFR 682.200(b).

(c) *Eligibility requirements for total and permanent disability discharge.* A borrower meets the eligibility requirements for total and permanent disability discharge if, during and at the end of the three-year conditional discharge period described in paragraph (a)(1) of this section—

(1) The borrower's annual earnings from employment do not exceed 100 percent of the poverty line for a family of two, as determined in accordance with the Community Service Block Grant Act; and (2) The borrower does not receive a new loan under the Perkins, FFEL, or Direct Loan programs, except for a FFEL or Direct consolidation loan that does not include any loans that are in a conditional discharge status.

(d) *Conditional discharge period.* During the conditional discharge period described in paragraph (a)(1) of this section, the borrower—

(1) Is not required to make any payments of principal or interest on the loan beginning on the date the Secretary makes an initial determination that the borrower is totally and permanently disabled;

(2) Is not considered to be delinquent or in default on the loan, unless the loan was delinquent or in default at the time the conditional discharge was granted;

(3) Must promptly notify the Secretary of any changes in the borrower's address or telephone number;

(4) Must promptly notify the Secretary if the borrower's annual earnings from employment exceed the amount specified in paragraph (c)(1) of this section; and

(5) Must provide the Secretary, upon request, with additional documentation or information related to the borrower's eligibility for discharge under this section.

(e) *Provisions for discharge of Direct Consolidation Loans.* (1) For a Direct Consolidation Loan, a borrower is considered totally and permanently disabled if he or she would be considered totally and permanently disabled under the provisions of this section for all of the loans that were included in the Direct Consolidation Loan if those loans had not been consolidated.

(2) For the purposes of discharging a loan under paragraph (e)(1) of this section, the provisions of this section apply to each loan included in the Direct Consolidation Loan, even if the loan is not a Direct Loan Program loan.

(3) If requested, a borrower seeking to discharge a loan obligation under paragraph (e)(1) of this section must provide the Secretary with the disbursement dates of the underlying loans.

(Authority: 20 U.S.C. 1087a *et seq.*)

[FR Doc. 00–27891 Filed 10–31–00; 8:45 am]

BILLING CODE 4000–01–P

Federal Register

Wednesday,
November 1, 2000

Part XI

Department of Defense
General Services Administration
National Aeronautics and Space Administration

48 CFR Parts 2 and 4

Federal Acquisition Regulation; Electronic Signatures; Proposed Rule

DEPARTMENT OF DEFENSE

GENERAL SERVICES ADMINISTRATION

NATIONAL AERONAUTICS AND SPACE ADMINISTRATION

48 CFR Parts 2 and 4

[FAR Case 2000–304]

RIN 9000–AI94

Federal Acquisition Regulation; Electronic Signatures

AGENCIES: Department of Defense (DoD), General Services Administration (GSA), and National Aeronautics and Space Administration (NASA).

ACTION: Proposed rule.

SUMMARY: The Civilian Agency Acquisition Council and the Defense Acquisition Regulations Council (Councils) are proposing to amend the Federal Acquisition Regulation (FAR) to clarify and encourage the use of electronic signatures in Federal procurement.

DATES: Interested parties should submit comments in writing on or before January 2, 2001 to be considered in the formulation of a final rule.

ADDRESSES: Submit written comments to: General Services Administration, FAR Secretariat (MVRS), 1800 F Street, NW, Room 4035, ATTN: Laurie Duarte, Washington, DC 20405.

Submit electronic comments via the Internet to: farcase.2000–304@gsa.gov.

Please submit comments only and cite FAR case 2000–304 in all correspondence related to this case.

FOR FURTHER INFORMATION CONTACT: The FAR Secretariat, Room 4035, GS Building, Washington, DC 20405, at (202) 501–4755 for information pertaining to status or publication schedules. For clarification of content, contact Ralph De Stefano, Procurement Analyst, at (202) 501–1758. Please cite FAR case 2000–304.

SUPPLEMENTARY INFORMATION:

A. Background

On October 21, 1998, the Government Paperwork Elimination Act (Title XVII of Division C of Public Law 105–277) was enacted. On June 30, 2000, the Electronic Signatures in Global and National Commerce Act (Pub. L. 106–229) was enacted. These laws eliminate legal barriers to using electronic technology in business transactions, such as the formation and signing of contracts.

The proposed rule furthers Government participation in electronic commerce when conducting Federal procurements by—

1. Revising the definitions of ''in writing'' and ''signature'' at FAR 2.101 to clarify that these terms include electronic, in addition to paper, transactions; and

2. Adding a policy statement at FAR Subpart 4.5, Electronic Commerce in Contracting, to encourage agencies to use electronic commerce, such as electronic signature, in the transaction of Federal procurements.

This is not a significant regulatory action and, therefore, was not subject to review under section 6(b) of Executive Order 12866, Regulatory Planning and Review, dated September 30, 1993. This rule is not a major rule under 5 U.S.C. 804.

B. Regulatory Flexibility Act

The Councils do not expect this proposed rule to have a significant economic impact on a substantial number of small entities within the meaning of the Regulatory Flexibility Act, 5 U.S.C. 601, *et seq.*, because this rule does not change procedures for award or administration of contracts, but, rather, only clarifies and encourages the use of electronic commerce for Federal procurement. An Initial Regulatory Flexibility Analysis has, therefore, not been performed. We invite comments from small businesses and other interested parties. The Councils will consider comments from small entities concerning the affected FAR Parts in accordance with 5 U.S.C. 610. Interested parties must submit such comments separately and should cite 5 U.S.C. 601, *et seq.* (FAR case 2000–304), in correspondence.

C. Paperwork Reduction Act

The Paperwork Reduction Act does not apply because the proposed changes to the FAR do not impose information collection requirements that require the approval of the Office of Management and Budget under 44 U.S.C. 3501, *et seq.*

List of Subjects in 48 CFR Parts 2 and 4

Government procurement.

Dated: October 26, 2000.

Al Matera,

Acting Director, Federal Acquisition Policy Division.

Therefore, DoD, GSA, and NASA propose that 48 CFR parts 2 and 4 be amended as set forth below:

1. The authority citation for 48 CFR parts 2 and 4 continues to read as follows:

Authority: 40 U.S.C. 486(c); 10 U.S.C. chapter 137; and 42 U.S.C. 2473(c).

PART 2—DEFINITIONS OF WORDS AND TERMS

2. Amend section 2.101 by revising the definitions ''Electronic commerce'', ''In writing'', and ''Signature'' to read as follows:

2.101 Definitions

* * * * *

Electronic commerce means business transactions accomplished by electronic techniques such as electronic mail or messaging, World Wide Web technology, electronic bulletin boards, purchase cards, electronic funds transfer, or electronic data interchange.

* * * * *

In writing or *written* means any expression of information in words, numbers, or other symbols, including electronic expressions, that can be read, reproduced, and stored.

* * * * *

Signature or *signed* means the discrete, verifiable symbol of an individual that, when attached to or logically associated with a written contract or other record with the knowledge and consent of the individual, indicates a present intention to authenticate the contract or other record. This includes an electronic signature made by electronic sound, symbols, or process.

* * * * *

PART 4—ADMINISTRATIVE MATTERS

3. Amend section 4.502 by adding paragraph (d) to read as follows:

4.502 Policy

* * * * *

(d) As required by the Government Paperwork Elimination Act (GPEA) (Title XVII of Division C of Public Law 105–277), by October 21, 2003, agencies must allow individuals or entities the option to submit information or transact with the agency electronically when practicable. The GPEA requirement includes execution of contracts and associated records using electronic signatures of the offeror or contractor and the agency.

[FR Doc. 00–27964 Filed 10–31–00; 8:45 am]

BILLING CODE 6820–EP–U

Federal Register

Wednesday,
November 1, 2000

Part XII

Department of the Treasury

Fiscal Service

31 CFR Parts 355 and 358

Fiscal Agency Checks and Book-Entry Conversion of Detached Bearer Coupons and Bearer Corpora; Final Rule

DEPARTMENT OF THE TREASURY

Fiscal Service

31 CFR Parts 355 and 358

Fiscal Agency Checks and Book-Entry Conversion of Detached Bearer Coupons and Bearer Corpora

AGENCY: Bureau of the Public Debt, Fiscal Service, Treasury.

ACTION: Final rule.

SUMMARY: We rewrote Regulations Governing Fiscal Agency Checks and Regulations Governing Book-Entry Conversion of Detached Bearer Coupons and Bearer Corpora, in plain language. We also made two changes in the regulations. We removed references to the Federal Reserve Bank of New York as the processor for bearer corpora and coupons, and we eliminated the fees requirement for conversions.

DATES: Effective November 1, 2000.

ADDRESSES: You can download this final rule at the following World Wide Web address: <http://www.publicdebt.treas.gov>.

FOR FURTHER INFORMATION CONTACT:

- Maureen Parker, Director, Division of Securities Systems, Office of Securities and Accounting Services, Bureau of the Public Debt, at (304) 480–7761 or <mparker@bpd.treas.gov>.
- Susan Klimas, Attorney-Adviser, Office of the Chief Counsel, Bureau of the Public Debt, at (304) 480–3688 or <sklimas@bpd.treas.gov>.
- Edward Gronseth, Deputy Chief Counsel, Bureau of the Public Debt, at (304) 480–3692 or <egronset@bpd.treas.gov>.

SUPPLEMENTARY INFORMATION: Executive Order 12866 and the President's memorandum of June 1, 1998 (63 FR 31885) require each agency to write all rules in plain language. We have rewritten 31 CFR part 355, Regulations Governing Fiscal Agency Checks, and 31 CFR part 358, Regulations Governing Book-Entry Conversion of Detached Bearer Coupons and Bearer Corpora, in plain language.

No substantive changes were made to part 355 which was originally published as an interim regulation in 1985. This final rule will adopt part 355 in a final form.

Part 358 has been changed to remove references to the Federal Reserve Bank of New York as the agent for the conversion to book-entry of bearer corpora and detached bearer coupons because the Bureau of the Public Debt will process the conversions at its Parkersburg, WV location.

Fees for conversions of corpora and coupons have been eliminated. The collection of fees is not cost-effective and is counter-productive to our goal of eliminating paper securities.

Procedural Requirements

This final rule does not meet the criteria for a ''significant regulatory action,'' as defined in Executive Order 12866. Therefore, the regulatory review procedures contained therein do not apply.

This final rule relates to matters of public contract and procedures for United States securities. The notice and public procedures requirements and delayed effective date requirements of the Administrative Procedure Act are inapplicable, pursuant to 5 U.S.C. 553(a)(2).

As no notice of proposed rulemaking is required, the Regulatory Flexibility Act (5 U.S.C. 601, *et seq.*) does not apply.

We ask for no new collections of information in this final rule. Therefore, the Paperwork Reduction Act (44 U.S.C. 3507) does not apply.

List of Subjects in 31 CFR Parts 355 and 358

Federal Reserve System, Government securities.

Accordingly, for the reasons set out in the preamble, 31 CFR Chapter II is amended as follows:

1. Revise 31 CFR part 355 to read as follows:

PART 355—REGULATIONS GOVERNING FISCAL AGENCY CHECKS

Sec.
355.0 What does this part cover?
355.1 Do any other regulations cover fiscal agency checks?
355.2 What special terms do I need to know to understand this part?
355.3 Where can I cash my fiscal agency check?
355.4 Is there a time limit on cashing a fiscal agency check?
355.5 What warranties does a presenting bank make?
355.6 What happens if the presenting bank breaches its warranty?
355.7 What notice should I give if I do not receive my check or if a check is lost, stolen, or destroyed?
355.8 How can I get a replacement fiscal agency check?
355.9 What should I do if I recover a check reported as lost, stolen, destroyed, or not received?
355.10 What happens if I present my check to the payor Reserve Bank more than six months after the issue date of the check?
355.11 What should I do if the endorsement on my check is forged or unauthorized?
355.12 What requirements apply if the check is payable to two or more persons?
355.13 Are there any additional requirements related to fiscal agency checks?
355.14 Can these regulations be waived?
355.15 Can these regulations be amended?

Authority: 12 U.S.C. 391; 31 U.S.C. Ch. 31.

§ 355.0 What does this part cover?

This part governs checks issued for payments in connection with United States securities. These checks, referred to as ''fiscal agency checks,'' are issued by a designated Federal Reserve Bank in its capacity as fiscal agent of the United States. The checks are drawn on the payor Federal Reserve Bank in its banking capacity. The drawer of a fiscal agency check is the United States, and the drawee is a Federal Reserve Bank. The rights and liabilities of the United States, the Federal Reserve Banks, and others are set out in this part.

§ 355.1 Do any other regulations cover fiscal agency checks?

The regulations governing checks drawn on the United States and on designated depositories of the United States do not apply to fiscal agency checks, unless a statute specifically provides differently, or unless we state differently in this part. If a definition or matter pertaining to fiscal agency checks is not specifically covered in this part, we will apply the provisions of Regulations J of the Board of Governors of the Federal Reserve System, at 12 CFR part 210. To the extent not otherwise covered by this part or by Regulation J, we will apply the provisions of the Uniform Commercial Code (U.C.C.)

§ 355.2 What special terms do I need to know to understand this part?

Depository institution means:

(1) Any insured bank, mutual savings bank or savings bank as defined in 12 U.S.C. 1813, or any institution eligible to become an insured bank under 12 U.S.C. 1815;

(2) Any insured credit union as defined in 12 U.S.C. 1752, or any credit union eligible to become an insured credit union under 12 U.S.C. 1781;

(3) Any member as defined in 12 U.S.C. 1422; and

(4) Any savings association as defined in 12 U.S.C. that is an insured depository institution as defined in the Federal Deposit Insurance Act, 12 U.S.C. 1811 *et seq.,* or is eligible to become an insured depository institution under that Act.

Fiscal agency check means a check for a payment in connection with a United States security drawn upon a Reserve Bank and issued on our behalf by the Reserve Bank in its capacity as fiscal agent of the United States.

Payee (or ''you'') means the person or persons to whom a fiscal agency check is made payable.

Payor Reserve Bank means the Reserve Bank on which a fiscal agency check is drawn.

Presenting bank means a depository institution that sends a fiscal agency check directly to a Reserve Bank for payment or collection.

Reserve Bank or Federal Reserve Bank means any Federal Reserve Bank or any branch of a Federal Reserve Bank.

Security, for the purpose of this part, means a direct obligation of the United States, including a Treasury bill, note, bond or savings bond/note.

We (or ''us'') refers to the Secretary of the Treasury and the Secretary's delegates at the Treasury Department and the Bureau of the Public Debt. The term also extends to any fiscal or financial agency acting on behalf of the United States when designated to act by the Secretary or the Secretary's delegates. The term does not refer to a United States Savings Bond issuing or paying agent.

§ 355.3 Where can I cash my fiscal agency check?

Presentment of a fiscal agency check must be made to the payor Reserve Bank. The payor Reserve Bank will only cash a fiscal agency check presented by the payee who can be identified to the satisfaction of the Reserve Bank. Otherwise, a fiscal agency check must be presented through banking channels. A refusal to accept or to pay fiscal agency check presented by a person other than the payee, or by a payee who is not reasonably identified, does not constitute dishonor.

§ 355.4 Is there a time limit on cashing a fiscal agency check?

A payor Reserve Bank may refuse to pay a fiscal agency check presented more than six (6) months after the issue date of the check. If the check is not presented within this time, you must follow the procedures in § 355.10.

§ 355.5 What warranties does a presenting bank make?

(a) A presenting bank makes the warranties required of a sender under Subpart A of Regulation J (12 CFR part 210). This paragraph does not limit any warranty by a presenter or other party arising under State law.

(b) We are not barred from recovering on a breach of warranty solely because:

(1) Our negligence contributed to a fraudulent endorsement or material alteration;

(2) We did not promptly discover an unauthorized signature or alteration;

(3) An impostor fraudulently caused the issuance of a fiscal agency check in the name of any existing payee; or

(4) Our employee fraudulently caused the issuance of a fiscal agency check in the name of any existing payee.

§ 355.6 What happens if the presenting bank breaches its warranty?

If the presenting bank breaches its warranty, the payor Reserve Bank may either return the check to the presenting bank or send notice of the breach to the presenting bank. If the presenting bank does not make prompt restitution when it receives the returned check or notice of breach, we may begin appropriate collection procedures.

§ 355.7 What notice should I give if I do not receive my check or if a check is lost, stolen, or destroyed?

If a fiscal agency check is not received within a reasonable time after a payment is due, or if a check is lost, stolen, or destroyed, you must provide prompt written notification. Your written notice may be sent to us or to the payor Reserve Bank. You may give notice by telephone, but we will not issue a replacement check until you confirm the notice in writing. The written notice must provide enough information for us to identify the account and the security to which the payment relates. We will stop payment on the fiscal agency check if we have a reasonable time to act before final payment.

§ 355.8 How can I get a replacement fiscal agency check?

The payor Federal Reserve Bank will issue a replacement fiscal agency check if:

(a) You submit written notice:

(b) The check is unpaid;

(c) We determine that recovery of the original check is unlikely; and

(d) The payee and endorsee, if any, of the check execute the required indemnification agreement.

§ 355.9 What should I do if I recover a check reported as lost, stolen, destroyed, or not received?

If you recover the original check you must notify us in writing. If we have not yet issued a replacement check, we will remove the stop payment order against the original check. If we have already issued a replacement check, you must return the original check to us.

§ 355.10 What happens if I present my check to the payor Reserve Bank more than six months after the issue date of the check?

If the payor Reserve Bank refuses payment on a fiscal agency check solely because it is presented more than six (6) months after the issue date of the check, a replacement check will be issued if you:

(a) Surrender the original check; and

(b) Executive the required indemnification agreement.

§ 355.11 What should I do if the endorsement on my check is forged or unauthorized?

If we verify the existence or a forged or unauthorized endorsement on a paid fiscal agency check, the payor Reserve Bank will issue a replacement check to the person entitled. The payee or endorsee must execute an affidavit that there has been a forged or unauthorized endorsement. We may also require an indemnification agreement.

§ 355.12 What requirements apply if the check is payable to two or more persons?

If the fiscal agency check is payable to two or more persons, the requirements of this part apply to all designated payees.

§ 355.13 Are there any additional requirements related to fiscal agency checks?

We may require an indemnification agreement, with or without surety. You must provide any additional evidence we consider necessary. We will require any information necessary for the protection of the interests of the United States.

§ 355.14 Can these regulations be waived?

We reserve the right, in our discretion, to waive any provision of the regulations in this part in any case or class of cases for the convenience of the United States, or to relieve any person of unnecessary hardship, if the waiver is not inconsistent with law and will not subject the United States to substantial expense or liability.

§ 355.15 Can these regulations be amended?

We may, at any time, supplement, amend, or revise the regulations in this part.

1. Revise 31 CFR part 358 to read as follows:

PART 358–REGULATIONS GOVERNING BOOK—ENTRY CONVERSION OF BEARER CORPORA AND DETACHED BEARER COUPONS

Sec.

358.0 What does this part cover?
358.1 What special terms apply to this part?
358.2 What regulations cover these securities?
358.3 Are there any bearer corpora or detached bearer coupons that are not eligible for conversion?
358.4 Which bearer corpora or detached bearer coupons are eligible for

conversion to transferable BECCS or CUBES securities?
358.5 Which bearer corpora or detached bearer coupons are eligible for conversion to non-transferable BECCS or CUBES securities?
358.6 What is the procedure for converting bearer corpora and detached bearer coupons to book-entry?
358.7 Where do I send my bearer corpora and detached bearer coupons to be converted?
358.8 Are there fees for the conversion of bearer corpora or detached bearer coupons?
358.9 Who is responsible for the cost and risks associated with the shipment of securities?
358.10 How are amounts of less than one dollar credited?
358.11 What is required to establish the authroity of a depository institution to request conversion?
358.12 What is Treasury's liability if the depository institution does not have authority to convert securities?
358.13 What is Treasury's liability if the depository institution incurs a loss because it does not follow required procedures?
358.14 What happens when securities are accepted for conversion?
358.15 What happens if securities are adjusted?
358.16 Are BECCS and CUBES accounts maintained separately from the STRIPS program?
358.17 Can BECCS and CUBES securities be reconstituted to physical form?
358.18 What limitations exist on liability?
358.19 Who is responsible for any loss resulting from the conversion of a bearer corpus missing callable coupons?
358.20 Can these regulations be waived?
358.21 Can these regulations be amended?

Authority: 12 U.S.C. 391, 31 U.S.C. Ch. 31.

§ 358.0 What does this part cover?

(a) This part applies to the conversion to book-entry of United States Treasury bearer corpora and detached bearer coupons.

(b) These instruments are accepted from depository institutions for conversion under the Bearer Corpora Conversion System (BECCS) and Coupons Under Book Entry Safekeeping (CUBES) programs.

(1) For coupons converted after November 1, 2000, these regulations supersede the terms and conditions governing CUBES set forth in the written ''Agreements to the Terms and Conditions Governing CUBES'' signed by depository institutions that previously participated in the CUBES program.

(2) Depository institutions that submit bearer corpora and detached bearer coupons are deemed to agree to the terms and conditions in this part and any other requirements we may prescribe.

§ 358.1 What special terms apply to this part?

Bearer security means a definitive security payable to the bearer on its face at maturity or when called for redemption before maturity in accordance with its terms. Ownership of a bearer security is not recorded. Title to the security may pass by delivery without endorsement or notice. The only remaining unmatured bearer securities are bearer bonds.

BECCS means the Treasury's Bearer Corpora Conversion System.

BECCS security means a United States Treasury bearer security converted to book-entry form and held in BECCS.

Callable means a United States Treasury security subject to call before maturity.

Callable Coupons means the coupons associated with a callable security that are due after the date the security is subject to call.

Conversion, as used in this part, means a change in the form of a security from definitive form to book-entry form.

Corpus (plural corpora) means the principal portion of a United States Treasury bearer security.

Coupon means a definitive bearer interest instrument associated with a United States Treasury bearer security.

CUBES means the Treasury's Coupon Under Book-Entry Safekeeping program.

CUBES security means a definitive coupon detached from a United States Treasury security and held in CUBES.

Definitive security means a security held in paper form.

Depository institution means:

(1) Any insured bank, mutual savings bank, or savings bank as defined in 12 U.S.C. 1813, or any institution eligible to become an insured bank under 12 U.S.C. 1815;

(2) Any insured credit union as defined in 12 U.S.C. 1752, or any credit union eligible to become an insured credit union under 12 U.S.C. 1781;

(3) Any member as defined in 12 U.S.C. 1422; and

(4) Any savings association as defined in 12 U.S.C. that is an insured depository institution as defined in the Federal Deposit Insurance Act, 12 U.S.C. 1811 *et seq.,* or is eligible to become an insured depository institution under that Act.

Non-callable means a United States Treasury bearer security not subject to call before maturity.

Non-callable coupons means coupons associated with a non-callable bearer security or coupons associated with a callable bearer security that are due on or before the date on which the callable bearer security is subject to call.

Non-transferable means the ownership of a security held in BECCS or CUBES may not be transferred. See § 358.5.

Transferable means the ownership of a security held in BECCS or CUBES may be transferred. See § 358.4 of this part.

We (or ''us'') refers to the Secretary of the Treasury and the Secretary's delegates at the Treasury Department and the Bureau of the Public Debt. The term also extends to any fiscal or financial agent we designate to act on behalf of the United States.

§ 358.2 What regulations cover these securities?

BECCS and CUBES securities are deemed to be securities for the purposes of 31 CFR part 357, subparts A, B, and D, and are governed by that part. Notwithstanding the provisions of 31 CFR part 357, certain BECCS and CUBES securities are non-transferable. See § 358.5.

§ 358.3 Are there any bearer corpora or detached bearer coupons that are not eligible for conversion?

Bearer corpora and detached bearer coupons will not be accepted if they are submitted:

(a) Within 30 days of their maturity date; or

(b) If the call provision has been invoked, within 30 days of their call date.

§ 358.4 Which bearer corpora or detached bearer coupons are eligible for conversion to transferable BECCS or CUBES securities?

(a) For a callable corpus to be eligible for conversion to a transferable BECCS security, all associated callable coupons must be submitted with the corpus. These callable coupons will be linked with the corpus within BECCS when converted. Once the coupons are linked to the corpus, they may not be transferred separately.

(b) A corpus that is not subject to call will be converted to a transferable BECCS security.

(c) Non-callable coupons will be converted to transferable CUBES securities.

§ 358.5 Which bearer corpora or detached bearer coupons are eligible for conversion to non-transferable BECCS or CUBES securities?

If all of the callable coupons associated with the corpus are not submitted with the corpus, the corpus will be converted to a non-transferable BECCS security. Any remaining callable coupons submitted with the corpus will be converted to individual non-transferable CUBES securities.

§ 358.6 What is the procedure for converting bearer corpora and detached bearer coupons to book-entry?

Bearer corpora and detached bearer coupons must be submitted in accordance with our procedures. They must be accompanied by an approved form executed by an authorized officer of the submitting depository institution. Until we verify the submission, the bearer corpora and detached bearer coupons are subject to rejection or adjustment.

§ 358.7 Where do I send my bearer corpora and detached bearer coupons to be converted?

Send bearer corpora and detached bearer coupons to be converted to: Bureau of the Public Debt, Division of Customer Service, P. O. Box 426, Parkersburg, WV 26106–0426.

§ 358.8 Are there fees for the conversion of bearer corpora or detached bearer coupons?

We do not charge fees for the conversion of bearer corpora or detached bearer coupons to BECCS or CUBES securities.

§ 358.9 Who is responsible for the cost and risks associated with the shipment of securities?

The following guidelines apply to the transportation of bearer corpora and detached bearer coupons:

(a) Shipment from the depository institution is at the risk and expense of the depository institution;

(b) Shipment between our designated agent and the Department, if required, is at our risk and expense; and

(c) Shipment of securities that are returned to the depository institution is at the risk and expense of the depository institution.

§ 358.10 How are amounts of less than one dollar credited?

Only full dollar amounts can be held in CUBES; principal amounts that include cents cannot be held in CUBES. Upon the conversion of coupons to CUBES, amounts of less than one dollar in aggregate per CUBES CUSIP will not be credited to the account of the depository institution.

Example: A depository institution submits five coupons with face amount of $346.88 each, and a total dollar amount of $1,734.40. Upon conversion of these coupons to CUBES, only $1,734.00 will be credited to the depository institution's account.

§ 358.11 What is required to established the authority of a depository institution to request conversion?

By submitting bearer corpora and detached bearer coupons for conversion to BECCS and CUBES securities, a depository institution represents that it has the authority to request the conversion.

§ 358.12 What is Treasury's liability if the depository institution does not have authority to convert securities?

We are not liable if the depository institution has no authority to convert the bearer corpora and detached bearer coupons to book-entry form or to take other actions in respect to book-entry accounts in BECCS and CUBES.

§ 358.13 What is Treasury's liability if the depository institution incurs a loss because it does not follow required procedures?

We are not liable for any loss incurred by the depository institution as a result of its failure to properly follow our procedures.

§ 358.14 What happens when securities are accepted for conversion?

(a) After processing and initial verification, we will transfer the securities accepted to the depository institution's book-entry account, establishing a securities entitlement in TRADES according to 31 CFR part 357 subpart B.

(b) We will do the final verification within twenty (20) business days of initial receipt of the bearer corpora and detached bearer coupons.

(c) If at any time after this twenty (20) day period we determine that the security was improperly credited to the BECCS or CUBES account of the depository institution, such as in the case of a previously undetected, counterfeit security, we reserve the right to adjust the BECCS or CUBES account.

§ 358.15 What happens if securities are adjusted?

(a) If we make an adjustment to all or part of the submitted securities, we will instruct the depository institution to transfer BECCS or CUBES securities of the same payment date and face amount from the depository institution's account to an account that we designate.

(b) If no such BECCS or CUBES securities exist in the depository institution's account, we will instruct the depository institution as to how the adjustment will be made.

(c) If the depository institution fails to comply with our instructions within five (5) business days of receipt of the instructions, we reserve the right to debit the master account of the depository institution for the face value of the adjusted bearer corpora and detached bearer coupons. By the submission of the bearer corpora and detached bearer coupons, the depository institution is deemed to agree to this debit.

§ 358.16 Are BECCS and CUBES accounts maintained separately from the STRIPS program?

BECCS and CUBES accounts are maintained separately from accounts maintained in Treasury's STRIPS (Separate Trading of Registered Interest and Principal of Securities) program.

§ 358.17 Can BECCS and CUBES securities be reconstituted to physical form?

After bearer corpora and detached bearer coupons have been converted to book-entry form, reconversion to physical form is prohibited. The reconstitution of a BECCS security with CUBES securities or any combination of Treasury obligations is prohibited.

§ 358.18 What limitations exist on liability?

(a) Except as otherwise provided by regulation, circular, or written agreement, any fiscal agent designated to act on our behalf is liable for its action or omission only if it failed to exercise ordinary care.

(b) We do not assume any responsibility to any party except the sending and receiving depository institutions involved in a BECCS or CUBES transaction.

(c) We do not assume any responsibility in connection with a BECCS or CUBES transaction for the insolvency, neglect, misconduct, mistake, or default of another bank or person, including the immediate participants.

§ 358.19 Who is responsible for any loss resulting from the conversion of a bearer corpus missing callable coupons?

The submitting depository institution shall indemnify the United States against any loss resulting from the conversion of a bearer corpus that is missing one or more associated callable coupons.

§ 358.20 Can these regulations be waived?

We reserve the right to waive or modify any provision of the regulations in this part for the convenience of the United States or to relieve any person of unnecessary hardship, if such action is not inconsistent with law, does not impair existing rights, and does not subject the United States to any substantial expense or liability.

§ 358.21 Can these regulations be amended?

We may at any time supplement, amend, or revise the regulations in this part.

Dated: October 24, 2000.

Donald V. Hammond,

Fiscal Assistant Secretary.

[FR Doc. 00–27920 Filed 10–31–00; 8:45 am]

BILLING CODE 4810–39–M

Reader Aids

Federal Register

Vol. 65, No. 212

Wednesday, November 1, 2000

CUSTOMER SERVICE AND INFORMATION

Federal Register/Code of Federal Regulations	
General Information, indexes and other finding aids	**202–523–5227**
Laws	**523–5227**
Presidential Documents	
Executive orders and proclamations	**523–5227**
The United States Government Manual	**523–5227**
Other Services	
Electronic and on-line services (voice)	**523–4534**
Privacy Act Compilation	**523–3187**
Public Laws Update Service (numbers, dates, etc.)	**523–6641**
TTY for the deaf-and-hard-of-hearing	**523–5229**

ELECTRONIC RESEARCH

World Wide Web

Full text of the daily Federal Register, CFR and other publications:

http://www.access.gpo.gov/nara

Federal Register information and research tools, including Public Inspection List, indexes, and links to GPO Access:

http://www.nara.gov/fedreg

E-mail

PENS (Public Law Electronic Notification Service) is an E-mail service for notification of recently enacted Public Laws. To subscribe, send E-mail to

listserv@www.gsa.gov

with the text message:

subscribe PUBLAWS-L your name

Use listserv@www.gsa.gov only to subscribe or unsubscribe to PENS. We cannot respond to specific inquiries.

Reference questions. Send questions and comments about the Federal Register system to:

info@fedreg.nara.gov

The Federal Register staff cannot interpret specific documents or regulations.

FEDERAL REGISTER PAGES AND DATE, NOVEMBER

65253–65704 1

CFR PARTS AFFECTED DURING NOVEMBER

At the end of each month, the Office of the Federal Register publishes separately a List of CFR Sections Affected (LSA), which lists parts and sections affected by documents published since the revision date of each title.

REMINDERS

The items in this list were editorially compiled as an aid to Federal Register users. Inclusion or exclusion from this list has no legal significance.

RULES GOING INTO EFFECT NOVEMBER 1, 2000

COMMERCE DEPARTMENT

Civil monetary penalty inflation adjustments; published 11-1-00

COMMODITY FUTURES TRADING COMMISSION

Commodity pool operators and commodity trading advisors:

Commodity pools; profile documents; disclosure; published 10-2-00

DEFENSE DEPARTMENT

Air Force Department

Military personnel:

Personnel delivery to United States civilian authorities for trial; published 10-27-00

ENERGY DEPARTMENT

Federal Energy Regulatory Commission

Practice and procedure:

Electronic filing of documents; published 9-21-00

ENVIRONMENTAL PROTECTION AGENCY

Superfund program:

National oil and hazardous substances contingency plan—

National priorities list update; published 11-1-00

FEDERAL COMMUNICATIONS COMMISSION

Common carrier services:

Wireless telecommunications services—

Compatibility with enhanced 911 emergency calling systems; reconsideration petitions; published 10-2-00

Radio stations; table of assignments:

Various States; correction; published 11-1-00

PENSION BENEFIT GUARANTY CORPORATION

Single employer plans:

Allocation of assets—

Interest assumptions for valuing benefits; published 10-13-00

TRANSPORTATION DEPARTMENT

Federal Motor Carrier Safety Administration

Motor carrier safety and hazardous materials proceedings; household goods transportation in interstate or foreign commerce; published 10-2-00

TREASURY DEPARTMENT

Fiscal Service

Fiscal agency checks and book-entry coversion of detached bearer coupons and bearer corpora; published 11-1-00

COMMENTS DUE NEXT WEEK

AGRICULTURE DEPARTMENT

Animal and Plant Health Inspection Service

Animal welfare:

Pain and distress; definitions and reporting; comments due by 11-7-00; published 8-21-00

Plant-related quarantine, domestic:

Citrus canker; comments due by 11-6-00; published 9-5-00

AGRICULTURE DEPARTMENT

Commodity Credit Corporation

Loan and purchase programs:

Production flexibility contracts; contract violations and diminution in payments; fruits and vegetables planting payment reduction; comments due by 11-6-00; published 10-6-00

AGRICULTURE DEPARTMENT

Food and Nutrition Service

Child nutrition programs:

Women, infants, and children; special supplemental nutrition program—

Public Responsibility and Work Opportunity Reconciliation Act of 1996; WIC mandates implementation; comments due by 11-6-00; published 9-5-00

COMMERCE DEPARTMENT

National Oceanic and Atmospheric Administration

Fishery conservation and management:

Northeastern United States fisheries—

Atlantic mackerel, squid, and butterfish; comments due by 11-9-00; published 10-10-00

West Coast States and Western Pacific fisheries—

Pacific Coast groundfish; comments due by 11-7-00; published 9-8-00

CORPORATION FOR NATIONAL AND COMMUNITY SERVICE

Higher education institutions, hospitals, and other non-profit organizations; grants and agreements; uniform administrative requirements; comments due by 11-6-00; published 9-5-00

DEFENSE DEPARTMENT

Army Department

Environmental quality:

National Environmental Policy Act; implementation; comments due by 11-6-00; published 9-7-00

DEFENSE DEPARTMENT

Federal Acquisition Regulation (FAR):

Forced or indentured child labor, products produced by; prohibition of acquisition; comments due by 11-6-00; published 9-6-00

Privacy Act; implementation; comments due by 11-6-00; published 9-6-00

ENERGY DEPARTMENT

Nuclear safety management; contractor- and government-operated nuclear facilities; comments due by 11-9-00; published 10-10-00

ENVIRONMENTAL PROTECTION AGENCY

Air programs:

Stratospheric ozone protection—

Essential use allowances; allocation; comments due by 11-6-00; published 10-6-00

Air quality implementation plans; approval and promulgation; various States:

District of Columbia; comments due by 11-9-00; published 10-19-00

Maryland; comments due by 11-9-00; published 10-19-00

Maryland and Virginia; comments due by 11-9-00; published 10-19-00

Montana; comments due by 11-9-00; published 10-10-00

Virginia; comments due by 11-6-00; published 10-6-00

Water pollution control:

National Pollutant Discharge Elimination System—

Cooling water intake structures for new facilities; comments due by 11-9-00; published 8-31-00

Water pollution; effluent guidelines for point source categories:

Publicly owned treatment works; pretreatment program reinvention projects under Project XL; comments due by 11-6-00; published 10-6-00

FEDERAL COMMUNICATIONS COMMISSION

Radio stations; table of assignments:

New York; comments due by 11-6-00; published 9-26-00

Texas; comments due by 11-6-00; published 10-4-00

FEDERAL EMERGENCY MANAGEMENT AGENCY

Flood insurance program:

Letters of Map Revision Based on Fill; requests; comments due by 11-9-00; published 10-10-00

FEDERAL TRADE COMMISSION

Trade regulation rules:

Franchising and business opportunity ventures; disclosure requirements and prohibitions; comments due by 11-6-00; published 9-6-00

GENERAL SERVICES ADMINISTRATION

Federal Acquisition Regulation (FAR):

Forced or indentured child labor, products produced by; prohibition of acquisition; comments due by 11-6-00; published 9-6-00

GOVERNMENT ETHICS OFFICE

Standards of ethical conduct for Executive Branch employees; comments due by 11-6-00; published 9-5-00

Correction; comments due by 11-6-00; published 9-12-00

HEALTH AND HUMAN SERVICES DEPARTMENT

Food and Drug Administration

Animal drugs, feeds, and related products:

Presubmission conferences; comments due by 11-8-00; published 8-25-00

HEALTH AND HUMAN SERVICES DEPARTMENT

Health Care Financing Administration

Medicaid:

Hospital, nursing facility, intermediate care facility, and mentally retarded and clinic services; upper payment limit requirements modification; comments due by 11-9-00; published 10-10-00

HOUSING AND URBAN DEVELOPMENT DEPARTMENT

Low income housing:

Housing assistance payments (Section 8)—

Fair market rent schedules for Housing Choice Voucher Program; comments due by 11-6-00; published 10-6-00

INTERIOR DEPARTMENT

Indian Affairs Bureau

Financial activities:

Loan guaranty, insurance, and interest subsidy; revision; comments due by 11-6-00; published 9-6-00

JUSTICE DEPARTMENT

Immigration and Naturalization Service

Immigration:

Second preference employment-based immigrant physicians serving in medically underserved areas, etc.; national interest waivers; comments due by 11-6-00; published 9-6-00

Correction; comments due by 11-6-00; published 10-20-00

NATIONAL AERONAUTICS AND SPACE ADMINISTRATION

Federal Acquisition Regulation (FAR):

Forced or indentured child labor, products produced by; prohibition of acquisition; comments due by 11-6-00; published 9-6-00

SMALL BUSINESS ADMINISTRATION

Program for Investment In Microentrepreneurs Act; implementation:

Disadvantaged entrepreneurs; training and technical assistance grants; comments due by 11-9-00; published 10-10-00

STATE DEPARTMENT

Nationality and passports:

Executing passport application on behalf of minor; procedures; comments due by 11-6-00; published 10-10-00

Visas; immigrant and nonimmigrant documention:

Immigrant visa fees; change in payment procedures; comments due by 11-7-00; published 9-8-00

TRANSPORTATION DEPARTMENT

Coast Guard

Ports and waterways safety:

Portage River and Lily Pond Harbor, MI; inland waterways navigation regulation removed; comments due by 11-6-00; published 9-5-00

TRANSPORTATION DEPARTMENT

Federal Aviation Administration

Airworthiness directives:

Agusta S.p.A.; comments due by 11-6-00; published 9-22-00

Allison Engine Co.; comments due by 11-6-00; published 9-7-00

Bombardier; comments due by 11-6-00; published 10-5-00

Pilatus Aircraft Ltd.; comments due by 11-7-00; published 10-2-00

Rockwell Collins, Inc.; comments due by 11-6-00; published 10-2-00

Rolls-Royce plc; comments due by 11-6-00; published 9-7-00

Class E airspace; comments due by 11-6-00; published 9-21-00

TREASURY DEPARTMENT

Internal Revenue Service

Income taxes:

Foreign trusts that have U.S. beneficiaries; comments due by 11-6-00; published 8-7-00

Recognition of gain on certain transfers to certain foreign trusts and estates; comments due by 11-6-00; published 8-7-00

TREASURY DEPARTMENT

Thrift Supervision Office

Mutual savings associations, mutual holding company reorganizations, and conversions from mutual to stock form; comments due by 11-9-00; published 10-10-00

Repurchases of stock by recently-converted savings associations, mutual holding company dividend waivers, and Gramm-Leach-Biley Act changes; comments due by 11-9-00; published 10-10-00

LIST OF PUBLIC LAWS

This is a continuing list of public bills from the current session of Congress which have become Federal laws. It may be used in conjunction with ''P L U S'' (Public Laws Update Service) on 202–523–6641. This list is also available online at http://www.nara.gov/fedreg.

The text of laws is not published in the **Federal Register** but may be ordered in ''slip law'' (individual pamphlet) form from the Superintendent of Documents, U.S. Government Printing Office, Washington, DC 20402 (phone, 202–512–1808). The text will also be made available on the Internet from GPO Access at http://www.access.gpo.gov/nara/index.html. Some laws may not yet be available.

H.R. 1509/P.L. 106–348

To authorize the Disabled Veterans' LIFE Memorial Foundation to establish a memorial in the District of Columbia or its environs to honor veterans who became disabled while serving in the Armed Forces of the United States. (Oct. 24, 2000; 114 Stat. 1358)

H.R. 3201/P.L. 106–349

Carter G. Woodson Home National Historic Site Study Act of 2000 (Oct. 24, 2000; 114 Stat. 1359)

H.R. 3632/P.L. 106–350

Golden Gate National Recreation Area Boundary Adjustment Act of 2000 (Oct. 24, 2000; 114 Stat. 1361)

H.R. 3676/P.L. 106–351

Santa Rosa and San Jacinto Mountains National Monument Act of 2000 (Oct. 24, 2000; 114 Stat. 1362)

H.R. 4063/P.L. 106–352

Rosie the Riveter/World War II Home Front National Historical Park Establishment Act of 2000 (Oct. 24, 2000; 114 Stat. 1370)

H.R. 4275/P.L. 106–353

Colorado Canyons National Conservation Area and Black Ridge Canyons Wilderness Act of 2000 (Oct. 24, 2000; 114 Stat. 1374)

H.R. 4386/P.L. 106–354

Breast and Cervical Cancer Prevention and Treatment Act of 2000 (Oct. 24, 2000; 114 Stat. 1381)

H.R. 4613/P.L. 106–355

National Historic Lighthouse Preservation Act of 2000 (Oct. 24, 2000; 114 Stat. 1385)

H.R. 5036/P.L. 106–356

Dayton Aviation Heritage Preservation Amendments Act of 2000 (Oct. 24, 2000; 114 Stat. 1391)

S. 1849/P.L. 106–357

White Clay Creek Wild and Scenic Rivers System Act (Oct. 24, 2000; 114 Stat. 1393)

H.J. Res. 115/P.L. 106–358

Making further continuing appropriations for the fiscal year 2001, and for other purposes. (Oct. 26, 2000; 114 Stat. 1397)

H.J. Res. 116/P.L. 106–359

Making further continuing appropriations for the fiscal year 2001, and for other purposes. (Oct. 26, 2000; 114 Stat. 1398)

Last List October 26, 2000

Public Laws Electronic Notification Service (PENS)

PENS is a free electronic mail notification service of newly enacted public laws. To subscribe, go to www.gsa.gov/archives/publaws-l.html or send E-mail to **listserv@www.gsa.gov** with the following text message:

SUBSCRIBE PUBLAWS-L Your Name.

Note: This service is strictly for E-mail notification of new laws. The text of laws is not available through this service. **PENS** cannot respond to specific inquiries sent to this address.

TABLE OF EFFECTIVE DATES AND TIME PERIODS—NOVEMBER 2000

This table is used by the Office of the Federal Register to compute certain dates, such as effective dates and comment deadlines, which appear in agency documents. In computing these dates, the day after publication is counted as the first day.

When a date falls on a weekend or holiday, the next Federal business day is used. (See 1 CFR 18.17)

A new table will be published in the first issue of each month.

DATE OF FR PUBLICATION	15 DAYS AFTER PUBLICATION	30 DAYS AFTER PUBLICATION	45 DAYS AFTER PUBLICATION	60 DAYS AFTER PUBLICATION	90 DAYS AFTER PUBLICATION
Nov 1	Nov 16	Dec 1	Dec 18	Jan 2	Jan 30
Nov 2	Nov 17	Dec 4	Dec 18	Jan 2	Jan 31
Nov 3	Nov 20	Dec 4	Dec 18	Jan 2	Feb 1
Nov 6	Nov 21	Dec 6	Dec 21	Jan 5	Feb 5
Nov 7	Nov 22	Dec 7	Dec 22	Jan 8	Feb 5
Nov 8	Nov 24	Dec 8	Dec 26	Jan 8	Feb 6
Nov 9	Nov 24	Dec 11	Dec 26	Jan 8	Feb 7
Nov 13	Nov 28	Dec 13	Dec 28	Jan 12	Feb 12
Nov 14	Nov 29	Dec 14	Dec 29	Jan 16	Feb 12
Nov 15	Nov 30	Dec 15	Jan 2	Jan 16	Feb 13
Nov 16	Dec 1	Dec 18	Jan 2	Jan 16	Feb 14
Nov 17	Dec 4	Dec 18	Jan 2	Jan 16	Feb 15
Nov 20	Dec 5	Dec 20	Jan 4	Jan 19	Feb 20
Nov 21	Dec 6	Dec 21	Jan 5	Jan 22	Feb 20
Nov 22	Dec 7	Dec 22	Jan 8	Jan 22	Feb 20
Nov 24	Dec 11	Dec 26	Jan 8	Jan 23	Feb 22
Nov 27	Dec 12	Dec 27	Jan 11	Jan 26	Feb 26
Nov 28	Dec 13	Dec 28	Jan 12	Jan 29	Feb 26
Nov 29	Dec 14	Dec 29	Jan 16	Jan 29	Feb 27
Nov 30	Dec 15	Jan 2	Jan 16	Jan 29	Feb 28