AUTHENTICATED
U.S. GOVERNMENT
INFORMATION
GPO

Federal Register

11–13–00 Monday
Vol. 65 No. 219 Nov. 13, 2000
Pages 67605–68064

The **FEDERAL REGISTER** is published daily, Monday through Friday, except official holidays, by the Office of the Federal Register, National Archives and Records Administration, Washington, DC 20408, under the Federal Register Act (44 U.S.C. Ch. 15) and the regulations of the Administrative Committee of the Federal Register (1 CFR Ch. I). The Superintendent of Documents, U.S. Government Printing Office, Washington, DC 20402 is the exclusive distributor of the official edition.

The **Federal Register** provides a uniform system for making available to the public regulations and legal notices issued by Federal agencies. These include Presidential proclamations and Executive Orders, Federal agency documents having general applicability and legal effect, documents required to be published by act of Congress, and other Federal agency documents of public interest.

Documents are on file for public inspection in the Office of the Federal Register the day before they are published, unless the issuing agency requests earlier filing. For a list of documents currently on file for public inspection, see http://www.nara.gov/fedreg.

The seal of the National Archives and Records Administration authenticates the Federal Register as the official serial publication established under the Federal Register Act. Under 44 U.S.C. 1507, the contents of the **Federal Register** shall be judicially noticed.

The **Federal Register** is published in paper and on 24x microfiche. It is also available online at no charge as one of the databases on GPO Access, a service of the U.S. Government Printing Office.

The online edition of the **Federal Register** is issued under the authority of the Administrative Committee of the Federal Register as the official legal equivalent of the paper and microfiche editions (44 U.S.C. 4101 and 1 CFR 5.10). It is updated by 6 a.m. each day the **Federal Register** is published and it includes both text and graphics from Volume 59, Number 1 (January 2, 1994) forward.

GPO Access users can choose to retrieve online **Federal Register** documents as TEXT (ASCII text, graphics omitted), PDF (Adobe Portable Document Format, including full text and all graphics), or SUMMARY (abbreviated text) files. Users should carefully check retrieved material to ensure that documents were properly downloaded.

On the World Wide Web, connect to the **Federal Register** at http://www.access.gpo.gov/nara. Those without World Wide Web access can also connect with a local WAIS client, by Telnet to swais.access.gpo.gov, or by dialing (202) 512-1661 with a computer and modem. When using Telnet or modem, type swais, then log in as guest with no password.

For more information about GPO Access, contact the GPO Access User Support Team by E-mail at gpoaccess@gpo.gov; by fax at (202) 512–1262; or call (202) 512–1530 or 1–888–293–6498 (toll free) between 7 a.m. and 5 p.m. Eastern time, Monday–Friday, except Federal holidays.

The annual subscription price for the **Federal Register** paper edition is $638, or $697 for a combined **Federal Register,** Federal Register Index and List of CFR Sections Affected (LSA) subscription; the microfiche edition of the **Federal Register** including the Federal Register Index and LSA is $253. Six month subscriptions are available for one-half the annual rate. The charge for individual copies in paper form is $9.00 for each issue, or $9.00 for each group of pages as actually bound; or $2.00 for each issue in microfiche form. All prices include regular domestic postage and handling. International customers please add 25% for foreign handling. Remit check or money order, made payable to the Superintendent of Documents, or charge to your GPO Deposit Account, VISA, MasterCard or Discover. Mail to: New Orders, Superintendent of Documents, P.O. Box 371954, Pittsburgh, PA 15250–7954.

There are no restrictions on the republication of material appearing in the **Federal Register.**

How To Cite This Publication: Use the volume number and the page number. Example: 65 FR 12345.

SUBSCRIPTIONS AND COPIES

PUBLIC	
Subscriptions:	
Paper or fiche	**202–512–1800**
Assistance with public subscriptions	**512–1806**
General online information	**202–512–1530; 1–888–293–6498**
Single copies/back copies:	
Paper or fiche	**512–1800**
Assistance with public single copies	**512–1803**
FEDERAL AGENCIES	
Subscriptions:	
Paper or fiche	**523–5243**
Assistance with Federal agency subscriptions	**523–5243**

FEDERAL REGISTER WORKSHOP

THE FEDERAL REGISTER: WHAT IT IS AND HOW TO USE IT

FOR: Any person who uses the Federal Register and Code of Federal Regulations.

WHO: Sponsored by the Office of the Federal Register.

WHAT: Free public briefings (approximately 3 hours) to present:

1. The regulatory process, with a focus on the Federal Register system and the public's role in the development of regulations.
2. The relationship between the Federal Register and Code of Federal Regulations.
3. The important elements of typical Federal Register documents.
4. An introduction to the finding aids of the FR/CFR system.

WHY: To provide the public with access to information necessary to research Federal agency regulations which directly affect them. There will be no discussion of specific agency regulations.

WASHINGTON, DC

WHEN: November 14, 2000, at 9:00 a.m.

WHERE: Office of the Federal Register
Conference Room
800 North Capitol Street, NW.
Washington, DC
(3 blocks north of Union Station Metro)

RESERVATIONS: 202–523–4538

Printed on recycled paper.

Contents

Federal Register

Vol. 65, No. 219

Monday, November 13, 2000

Agency for Healthcare Research and Quality
NOTICES
Evidence-based practice centers; topics nominations, 67748–67750

Agriculture Department
See Animal and Plant Health Inspection Service
See Commodity Credit Corporation
See Rural Telephone Bank

Alcohol, Tobacco and Firearms Bureau
PROPOSED RULES
Firearms:
Commerce in explosives—
Imported explosive materials; identification markings, 67669–67670

Animal and Plant Health Inspection Service
RULES
Exportation and importation of animals and animal products:
Horses, ruminants, swine, and dogs; inspection and treatment for screwworm, 67617–67624
PROPOSED RULES
User fees:
Veterinary services—
Permit applications, 67657–67663
NOTICES
Agency information collection activities:
Proposed collection; comment request, 67710–67711

Arts and Humanities, National Foundation
See National Foundation on the Arts and the Humanities

Blind or Severely Disabled, Committee for Purchase From People Who Are
See Committee for Purchase From People Who Are Blind or Severely Disabled

Census Bureau
NOTICES
Surveys, determinations, etc.:
Company organization, 67716

Centers for Disease Control and Prevention
NOTICES
Meetings:
National Center for Infectious Diseases—
Scientific Counselors Board, 67750
National Institute for Occupational Safety and Health—
Scientific Counselors Board, 67750–67751

Coast Guard
RULES
Drawbridge operations:
Massachusetts, 67629

Commerce Department
See Census Bureau
See International Trade Administration
See National Oceanic and Atmospheric Administration
NOTICES
Agency information collection activities:
Submission for OMB review; comment request, 67715
Senior Executive Service:
Performance Review Board; membership, 67715–67716

Committee for Purchase From People Who Are Blind or Severely Disabled
NOTICES
Procurement list; additions and deletions, 67714–67715

Commodity Credit Corporation
RULES
Loan and purchase programs:
Bioenergy Program, 67608–67616

Defense Department
See Navy Department
NOTICES
Civilian health and medical program of uniformed services (CHAMPUS):
DRG-based payment system (2001 FY)—
TRICARE/CHAMPUS; revised weights, thresholds, and per diem rates, 67717–67718
Committees; establishment, renewal, termination, etc.:
Planning and Steering Advisory Committee, 67718
Telecommunications Service Priority System Oversight Committee, 67718–67719
Meetings:
Capabilities for Domestic Response to Terrorist Attacks Involving Weapons of Mass Destruction Advisory Panel, 67719
Defense Partnership Council, 67719
Women in Services Advisory Committee, 67719

Delaware River Basin Commission
NOTICES
Meetings and hearings, 67719–67720

Drug Enforcement Administration
PROPOSED RULES
Precursors and essential chemicals; importation and exportation:
Acetone, 2-butanone (MEK), and toluene
Correction, 67796

Education Department
RULES
Civil Rights Restoration Act; implementation:
Nondiscrimination on basis of race, color, national origin, sex, disability, and age; conforming amendments to regulations, 68049–68057
NOTICES
Agency information collection activities:
Proposed collection; comment request, 67720–67721
Submission for OMB review; comment request, 67721

Employment and Training Administration
RULES
Aliens:
Labor certification and petition process for temporary employment of nonimmigrant aliens in U.S. agriculture; Labor Department adjudication authority
Effective date deferred, 67628
NOTICES
Agency information collection activities:
Proposed collection; comment request, 67763–67764

Employment Standards Administration
NOTICES
Minimum wages for Federal and federally-assisted construction; general wage determination decisions, 67764–67765

Energy Department
See Energy Efficiency and Renewable Energy Office
See Federal Energy Regulatory Commission
NOTICES
Grants and cooperative agreements; availability, etc.:
National Gas Infrastructure Reliability Program, 67721–67722
Meetings:
Environmental Management Site-Specific Advisory Board—
Pantex Plant, TX, 67722
Hydrogen Technical Advisory Panel, 67722–67723
International Energy Agency Industry Advisory Board, 67723–67724

Energy Efficiency and Renewable Energy Office
NOTICES
Meetings:
State Energy Advisory Board, 67724

Environmental Protection Agency
RULES
Air quality implementation plans; approval and promulgation; various States:
Alabama; correction, 67796
Michigan, 67629–67638
Water pollution control:
Great Lakes System; water quality guidance—
Bioaccumulative chemicals of concern; mixing zones prohibition, 67638–67651
PROPOSED RULES
Air quality implementation plans; approval and promulgation; various States:
Michigan, 67675
Montana; correction, 67796
NOTICES
Meetings:
Pesticide Program Dialogue Committee, 67740–67741
Reports and guidance documents; availability, etc.:
Savannah River Site; transuranic radioactive waste for disposal at Waste Isolation Pilot Plant; waste characterization program documents, 67741–67742
Superfund; response and remedial actions, proposed settlements, etc.:
Appalachian Power et al.; regional transport of ozone; reduction regulations, 67742
Water pollution control:
Total maximum daily loads—
Mermentau and Vermilion/Tech river basins, LA; TMLDs required by court order, 67742–67743

Executive Office of the President
See Presidential Documents
See Trade Representative, Office of United States

Federal Aviation Administration
RULES
Class D airspace, 67624
Class D and Class E4 airspace, 67624–67625
Class E3 and E4 airspace, 67626–67628
Class E airspace, 67625–67626
PROPOSED RULES
Airworthiness directives:
Empresa Brasileira de Aeronautica S.A., 67663–67664
Class E airspace, 67664–67666
NOTICES
Aeronautical land-use assurance; waivers:
North Adams Airport, MA, 67788
Passenger facility charges; applications, etc.:
Central Nebraska Regional Airport, NE, 67788–67789
Lake Charles Regional Airport, LA, 67789
Reports and guidance documents; availability, etc.:
Credit for emergency services provided as airport local share under Airport Improvement Program; study and report to Congress, 67790

Federal Communications Commission
RULES
Common carrier services:
Foreign participation in U.S. telecommunications market; rules and policies
Effective date, 67651–67652
Radio stations; table of assignments:
California, 67653–67654
Illinois and Iowa, 67655
Nebraska, 67653
New Mexico, 67654
North Carolina, 67652
Oregon, 67654
Pennsylvania, 67654–67655
Texas, 67655–67656
Washington, 67652–67653
PROPOSED RULES
Common carrier services:
Incumbent local exchange carriers; accounting and ARMIS reporting requirements; comprehensive review; biennial regulatory review (Phases 2 and 3), 67675–67688
Radio stations; table of assignments:
Alabama, 67690–67691
Arizona, 67689–67690
Colorado and California, 67691
Georgia, 67692
Tennessee, 67691–67692
Texas, 67688–67689
West Virginia, 67692–67693
NOTICES
Agency information collection activities:
Proposed collection; comment request, 67743–67746
Meetings:
North American Numbering Council, 67746–67747

Federal Contract Compliance Programs Office
RULES
Affirmative action and nondiscrimination obligations of contractors and subcontractors:
Affirmative action programs; requirements, 68021–68047

Federal Deposit Insurance Corporation
NOTICES
Meetings; Sunshine Act, 67747

Federal Emergency Management Agency
NOTICES
Disaster and emergency areas:
New Jersey, 67747–67748
Meetings:
Technical Mapping Advisory Council, 67748

Federal Energy Regulatory Commission
NOTICES
Electric rate and corporate regulation filings:
Goldendale Energy, Inc., et al, 67732–67736
Public Service Electric & Gas Co. et al, 67736–67738
Texas-New Mexico Power Co. et al., 67738–67739
Applications, hearings, determinations, etc.:
ANR Pipeline Co., 67724, 67739–67740
Dominion Transmission, Inc., 67724–67725
East Tennessee Natural Gas Co., 67725–67726
Equitrans, L.P., 67726–67727
Great Lakes Gas Transmission L.P., 67727
Iroquois Gas Transmission System, L.P., 67727
Maritimes & Northeast Pipeline, L.L.C., 67727–67728
Natural Gas Pipeline Co. of America, 67728
New England Power Pool, 67728
Northern Natural Gas Co., 67728–67729
Northwest Pipeline Corp., 67729–67730
PG&E Gas Transmission, Northwest Corp., 67730
Reliant Energy Gas Transmission Co., 67730
Southern Natural Gas Co., 67730–67731
Texas Gas Transmission Corp., 67731–67732
Transcontinental Gas Pipe Line Corp., 67732

Federal Highway Administration
NOTICES
Environmental statements; notice of intent:
Iberia, St. Martin, and Lafayette Parishes, LA, 67790
Manatee County, FL, 67791
Sarasota and Charlotte Counties, FL, 67791
St. Mary Parish, LA, 67791–67792

Fish and Wildlife Service
PROPOSED RULES
Endangered and threatened species
Critical habitat designations—
Various plants from Kauai and Niihau, HI; correction, 67796
NOTICES
Agency information collection activities:
Submission for OMB review; comment request, 67751–67752
Endangered and threatened species permit applications, 67752–67753
Environmental statements; availability, etc.:
Incidental take permits—
Leelanau County, MI; piping plover, 67753–67754

Health and Human Services Department
See Agency for Healthcare Research and Quality
See Centers for Disease Control and Prevention
See Health Care Financing Administration

Health Care Financing Administration
RULES
Medicare:
Hospital outpatient services; prospective payment system, 67797–68020
NOTICES
Agency information collection activities:
Submission for OMB review; comment request, 67751

Housing and Urban Development Department
PROPOSED RULES
Fair housing:
Fair Housing Act violations; sexual harassment cases, 67666–67668

Immigration and Naturalization Service
RULES
Nonimmigrant classes:
Aliens coming temporarily to U.S. to perform agricultural labor or services; H-2A classification petitions; adjudication delegated to Labor Department
Effective date delayed, 67616–67617

Indian Affairs Bureau
NOTICES
Tribal rolls:
Pokagon Band of Potawatomi Indians, 67754

Interior Department
See Fish and Wildlife Service
See Indian Affairs Bureau
See Land Management Bureau
See Minerals Management Service
See National Park Service
See Reclamation Bureau

International Trade Administration
NOTICES
Antidumping:
Pure magnesium from—
China, 67716
Applications, hearings, determinations, etc.:
University of—
Wisconsin-Madison, 67716

International Trade Commission
NOTICES
Import investigations:
Bar clamps, bar clamp pads, and related packaging, display, and other materials, 67761–67762
Meetings; Sunshine Act, 67762

Justice Department
See Drug Enforcement Administration
See Immigration and Naturalization Service
See Justice Programs Office
See Prisons Bureau

Justice Programs Office
NOTICES
Agency information collection activities:
Submission for OMB review; comment request, 67762–67763

Labor Department
See Employment and Training Administration
See Employment Standards Administration
See Federal Contract Compliance Programs Office
See Occupational Safety and Health Administration
See Pension and Welfare Benefits Administration

Land Management Bureau
NOTICES
Motor vehicle use restrictions:
Montana, 67754–67755

Realty actions; sales, leases, etc.:
Arizona, 67755

Legal Services Corporation
NOTICES
Meetings; Sunshine Act; correction, 67796

Merit Systems Protection Board
RULES
Practice and procedure:
Personnel actions allegedly based on whistleblowing; appeals and stay requests, 67607–67608

Minerals Management Service
NOTICES
Agency information collection activities:
Proposed collection; comment request, 67755–67756

National Aeronautics and Space Administration
NOTICES
Agency information collection activities:
Proposed collection; comment request, 67781

National Credit Union Administration
NOTICES
Meetings; Sunshine Act, 67781

National Foundation on the Arts and the Humanities
NOTICES
Agency information collection activities:
Submission for OMB review; comment request, 67781–67782

National Highway Traffic Safety Administration
PROPOSED RULES
Motor vehicle safety standards:
Fuel system integrity, 67693–67707

National Oceanic and Atmospheric Administration
PROPOSED RULES
Fishery conservation and management:
Magnuson-Stevens Act provisions—
Domestic fisheries; exempted fishing permits, 67708–67709
NOTICES
Agency information collection activities:
Submission for OMB review; comment request, 67717

National Park Service
NOTICES
Environmental statements; availability, etc.:
National Capital Parks-East, Washington, DC; U.S. Park Police aviation section hangar and fuel system improvements, 67756
Native American human remains and associated funerary objects:
Anthropological Studies Center, Archaeological Collections Facility, Sonoma State University, CA—
Inventory from Suscol Site, Napa County, CA, 67756–67757
University of Denver, Anthropology Department and Museum, CO—
Inventory from Churchill County, NV, 67758–67759
Inventory from Hales' Point Mound, Lauderdale County, TN, 67759
Inventory from Pueblo Blanco, Santa Fe County, NM, 67757–67758
Inventory from Wind River Reservation, Fremont County, WY, 67759–67761

National Transportation Safety Board
NOTICES
Meetings; Sunshine Act, 67782–67783

Navy Department
RULES
Property disposition
Correction, 67628–67629

Occupational Safety and Health Administration
PROPOSED RULES
State plans; standards approval, etc.:
New Jersey, 67672–67675

Office of United States Trade Representative
See Trade Representative, Office of United States

Pension and Welfare Benefits Administration
NOTICES
Employee benefit plans; prohibited transaction exemptions:
Bear, Stearns & Co., Inc., et al., 67765–67774
Country Securities Corp. et al., 67774–67781

Presidential Documents
PROCLAMATIONS
Special observances:
Adoption Month, National (Proc. 7371), 67605–67606
ADMINISTRATIVE ORDERS
Iran; continuation of U.S. Emergency, 68059–68061
Weapons of mass destruction; continuation of emergency, 68063

Presidio Trust
NOTICES
Environmental statements; availability, etc.:
Area B, Presidio of San Francisco, CA; general management plan, etc., 67783

Prisons Bureau
PROPOSED RULES
Inmate control, custody, care, etc.:
Suicide prevention program, 67670–67672

Public Health Service
See Agency for Healthcare Research and Quality
See Centers for Disease Control and Prevention

Reclamation Bureau
NOTICES
Central Valley Project Improvement Act:
Water management plans; evaluation criteria, 67761

Research and Special Programs Administration
NOTICES
Agency information collection activities:
Submission for OMB review; comment request, 67792–67793
Hazardous materials:
Exemption applications delayed; list, 67793–67795

Rural Telephone Bank
NOTICES
Loan policies:
Interest rates, 67711–67713

Securities and Exchange Commission
NOTICES
Self-regulatory organizations; proposed rule changes:
Boston Stock Exchange, Inc., 67783–67784

International Securities Exchange LLC, 67784–67785
Pacific Exchange, Inc., 67785–67787

Small Business Administration
NOTICES
Meetings; district and regional advisory councils:
Hawaii, 67788

Surface Transportation Board
NOTICES
Railroad services abandonment:
Union Pacific Railroad Co., 67795

Thrift Supervision Office
NOTICES
Applications, hearings, determinations, etc.:
Florida First Bancorp, 67795

Trade Representative, Office of United States
NOTICES
Meetings:
Industry Sector Advisory Committees—Services, 67788

Transportation Department
See Coast Guard
See Federal Aviation Administration
See Federal Highway Administration
See National Highway Traffic Safety Administration
See Research and Special Programs Administration
See Surface Transportation Board

Treasury Department
See Alcohol, Tobacco and Firearms Bureau
See Thrift Supervision Office

Separate Parts In This Issue

Part II
Health and Human Services Department, Health Care Financing Administration, 67797–68020

Part III
Labor Department, Federal Contract Compliance Programs Office, 68021–68047

Part IV
Education Department, 68049–68057

Part V
The President, 68059–68061, 68063

Reader Aids
Consult the Reader Aids section at the end of this issue for phone numbers, online resources, finding aids, reminders, and notice of recently enacted public laws.

CFR PARTS AFFECTED IN THIS ISSUE

A cumulative list of the parts affected this month can be found in the Reader Aids section at the end of this issue.

3 CFR
Proclamations:
7371 67605
Executive Orders:
12170 (See Notice of November 9, 2000) 68059–68061
12938 (See Notice of November 9, 2000) 68063
Administrative Orders:
Notices:
November 9, 2000
November 9, 2000

5 CFR
1209 67607

7 CFR
1424 67608

8 CFR
103 67616
214 67616

9 CFR
93 67617
Proposed Rules:
130 67657

14 CFR
71 (4 documents) 67624, 67626
Proposed Rules:
39 67663
71 67664

20 CFR
655 67628

21 CFR
Proposed Rules:
1313 67796

24 CFR
Proposed Rules:
100 67666

27 CFR
Proposed Rules:
55 67669

28 CFR
Proposed Rules:
552 67670

29 CFR
Proposed Rules:
1956 67672

32 CFR
736 67628

33 CFR
117 67629

34 CFR
100 68050
104 68050
106 68050
110 68050

40 CFR
52 (2 documents) 67629, 67796
81 67629
132 67638
Proposed Rules:
52 (2 documents) 67675, 67796
81 67675

41 CFR
60-1 68022
60-2 68022

42 CFR
419 67798

47 CFR
63 67651
73 (9 documents) 67652, 67653, 67654, 67655
Proposed Rules:
32 67675
43 67675
64 67675
73 (9 documents) 67675, 67688, 67689, 67690, 67691, 67692

49 CFR
Proposed Rules:
571 67693

50 CFR
Proposed Rules:
17 67796
600 (2 documents) 67708, 67709

Federal Register
Vol. 65, No. 219
Monday, November 13, 2000

Presidential Documents

Title 3—

The President

Proclamation 7371 of November 7, 2000

National Adoption Month, 2000

By the President of the United States of America

A Proclamation

Families are the cornerstone of our Nation. Yet, today, tens of thousands of America's children are living within our child welfare system, without the sustained love and care of permanent families. For many of these children, often shuttled from one living situation to another, adoption opens the door to loving parents and permanent homes, where they can put down roots and learn what it means to be part of a safe, stable family. Adoption gives children who have been orphaned, abandoned, or abused a precious second chance at happiness; a chance to love and be loved and to reach their full potential in a secure, supportive environment.

While foster care offers children a safe temporary haven, adoption allows children to have the permanent homes they deserve. That is why increasing the chances of adoption for children in the foster care system has been one of my Administration's chief goals. Over the last 8 years, we have worked with the Congress to craft legislation that makes it easier, faster, and more affordable for parents to adopt children. Adoptive parents—like all new parents—can now take time off to care for their newly adopted children without fear of losing their jobs. We have ensured health coverage for adopted children with special needs, barred discrimination and delays of adoptions on the basis of race or ethnicity, provided tax cuts to families adopting children, and offered States financial incentives to move children more rapidly from foster care into the permanent homes of loving families.

We are beginning to see dramatic results from these efforts. Last year alone, 46,000 foster children were adopted—an increase of nearly 65 percent since 1996. All 50 States, as well as the District of Columbia and Puerto Rico, have succeeded in increasing the number of children adopted from their child welfare systems. This puts us well on the way to meeting my goal of doubling the annual number of adoptions from 28,000 in 1996 to 56,000 in 2002.

Despite our efforts, nearly 20,000 18-year-olds still leave foster care each year without the emotional, social, and financial support that adoptive families provide. To help them make the challenging transition to successful, independent adulthood, I signed the Foster Care Independence Act last year. This legislation provides young people who are growing too old for the foster care system with better educational opportunities and access to health care, training, housing assistance, counseling, and other services.

As we observe National Adoption Month, we should take pride in our progress, but realize that there is more work to be done. Let us recommit ourselves to giving our Nation's most vulnerable children what every child deserves and needs—a safe, stable home and a loving family. And let us also give thanks for the many generous and compassionate families who, through adoption, have opened their hearts and homes and changed a child's life forever.

NOW, THEREFORE, I, WILLIAM J. CLINTON, President of the United States of America, by virtue of the authority vested in me by the Constitution and laws of the United States, do hereby proclaim November 2000 as National

Adoption Month. I urge all Americans to observe this month with appropriate programs and activities to honor adoptive families and to participate in efforts to find permanent, loving homes for waiting children.

IN WITNESS WHEREOF, I have hereunto set my hand this seventh day of November, in the year of our Lord two thousand, and of the Independence of the United States of America the two hundred and twenty-fifth.

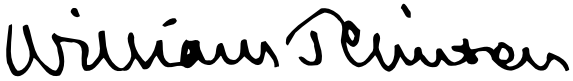

[FR Doc. 00–29089
Filed 11–09–00; 8:45 am]
Billing code 3195–01–P

Rules and Regulations

Federal Register
Vol. 65, No. 219
Monday, November 13, 2000

This section of the FEDERAL REGISTER contains regulatory documents having general applicability and legal effect, most of which are keyed to and codified in the Code of Federal Regulations, which is published under 50 titles pursuant to 44 U.S.C. 1510.

The Code of Federal Regulations is sold by the Superintendent of Documents. Prices of new books are listed in the first FEDERAL REGISTER issue of each week.

MERIT SYSTEMS PROTECTION BOARD

5 CFR Part 1209

Practices and Procedures for Appeals and Stay Requests of Personnel Actions Allegedly Based on Whistleblowing

AGENCY: Merit Systems Protection Board.

ACTION: Final rule.

SUMMARY: The Merit Systems Protection Board (MSPB or the Board) is amending its rules of practice and procedure in this part to permit an appellant who files a whistleblower appeal with MSPB after first seeking corrective action from the Office of Special Counsel (OSC) to satisfy certain requirements for the information to be included in the appeal by filing a copy of *Part 2: Reprisal for Whistleblowing* of the complaint form submitted to OSC, Form OSC–11 *(Complaint of Possible Prohibited Personnel Practice or Other Prohibited Activity),* as revised August 2000. On October 31, 2000, OSC amended its rules to require that, effective December 1, 2000, complaints of prohibited personnel practices or other prohibited activity (other than an alleged Hatch Act violation) be submitted on Form OSC–11. The amendment to the Board's rules is intended to assist appellants who file whistleblower appeals after first seeking corrective action from the Special Counsel to provide the information necessary for the Board to determine whether the appellant has satisfied the requirement to exhaust OSC procedures prior to filing with the Board.

EFFECTIVE DATE: November 13, 2000.

FOR FURTHER INFORMATION CONTACT: Robert E. Taylor, Clerk of the Board, (202) 653–7200.

SUPPLEMENTARY INFORMATION: On October 31, 2000, the Office of Special Counsel amended its rules at 5 CFR 1800.1, effective December 1, 2000, to require an individual who files a complaint of a prohibited personnel practice or other prohibited activity (other than an alleged Hatch Act violation) to complete and submit Form OSC–11, *Complaint of Possible Prohibited Personnel Practice or Other Prohibited Activity* (65 FR 64881). OSC revised the complaint form in August 2000 to group details of whistleblower reprisal allegations in a separate section of the form. That section, designated as *Part 2: Reprisal for Whistleblowing,* requires the complainant to describe each whistleblowing disclosure and to identify when and to whom the disclosure was made, the personnel action that was taken or threatened because of the whistleblowing disclosure, and the date of any such action or threat. The form is available on the OSC Web site (www.osc.gov).

Under the Whistleblower Protection Act, a Federal employee, former employee, or applicant for employment may file an appeal with the Board challenging a personnel action that the individual believes was taken or threatened because of whistleblowing activity. If the individual seeks to challenge a personnel action that is not directly appealable to the Board under another law, rule, or regulation, however, he must first seek corrective action from the Special Counsel. Such an individual may file an individual right of action (IRA) appeal with the Board only if the Special Counsel declines to seek corrective action from the Board or does not inform the individual within 120 days of the filing of the complaint that corrective action will be sought. 5 U.S.C. 1214(a)(3), 5 U.S.C. 1221(a), 5 CFR 1209.2(b)(1), 5 CFR 1209.5(a).

An individual who may appeal a personnel action directly to the Board under another law, rule, or regulation may file his appeal with the Board and raise the allegation that the personnel action was based on whistleblowing as a part of that appeal. 5 U.S.C. 1221(b), 5 CFR 1209.2(b)(2). Alternatively, such an individual may first file a complaint with the Special Counsel and subsequently file an otherwise appealable action (OAA) appeal with the Board after exhausting OSC procedures. 5 CFR 1209.5(b); also see *Hartfield* v. *Department of Defense,* 70 M.S.P.R. 20 (1996).

The U.S. Court of Appeals for the Federal Circuit held in *Ward* v. *Merit Systems Protection Board,* 981 F.2d 521, 526–27 (Fed. Cir. 1992), that in an IRA appeal, the Board may consider only those matters raised by the appellant in the complaint to the Special Counsel. By providing the Board a copy of Part 2 of Form OSC–11, describing each whistleblowing reprisal claim, an appellant who first sought corrective action from the Special Counsel will help ensure that the Board has sufficient information to determine whether the appellant has satisfied the statutory requirement of exhausting the OSC procedures with respect to all matters raised before the Special Counsel before filing an appeal with the Board.

Therefore, the Board is amending its rule at 5 CFR 1209.6 by adding a new subsection (a)(6) to permit an appellant who files a whistleblower appeal with the Board after first seeking corrective action from the Special Counsel to satisfy the requirements of subsections (a)(3) through (a)(5) of that section by filing a copy of Part 2 of Form OSC–11, together with a copy of any continuation sheet with answers to Part 2 questions filed with OSC, and any supplement to the original complaint filed with OSC or completed by OSC and furnished to the appellant.

The Board is making two additional changes to reflect Board rulings that an appellant is protected by the Whistleblower Protection Act if a personnel action is taken against him because the agency believed he made whistleblowing disclosures (*Special Counsel* v. *Department of the Navy,* 46 M.S.P.R. 274 (1990)) or because of his close relationship to a whistleblower (*Duda* v. *Department of Veterans Affairs,* 51 M.S.P.R. 444 (1991)). In § 1209.6(a)(4), ''the appellant's disclosure'' is replaced by ''each disclosure.'' In § 1209.6(a)(5)(ii), ''the appellant's whistleblowing'' is replaced by ''the whistleblowing disclosure.''

The Board is publishing this rule as a final rule pursuant to 5 U.S.C. 1204(h).

List of Subjects in 5 CFR Part 1209

Administrative practice and procedure, Government employees.

Accordingly, the Board amends 5 CFR part 1209 as follows:

PART 1209—PRACTICES AND PROCEDURES FOR APPEALS AND STAY REQUESTS OF PERSONNEL ACTIONS ALLEGEDLY BASED ON WHISTLEBLOWING

1. The authority citation for part 1209 continues to read as follows:

Authority: 5 U.S.C. 1204, 1221, 2302(b)(8), and 7701.

2. Amend § 1209.6 at paragraph (a) by revising subparagraphs (a)(4) and (a)(5)(ii) and by adding new subparagraph (a)(6) to read as follows:

§ 1209.6 Content of appeal; right to hearing.

(a) * * *

(4) A description of each disclosure evidencing whistleblowing as defined in § 1209.4(b) of this part; and

(5) * * *

(ii) The personnel action was or will be based wholly or in part on the whistleblowing disclosure, as described in § 1209.4(b) of this part.

(6) An appellant who first sought corrective action from the Special Counsel may satisfy the requirements of paragraphs (a)(3) through (a)(5) of this section by filing with the appeal a copy of *Part 2: Reprisal For Whistleblowing* of the complaint form submitted to the Office of Special Counsel (Form OSC–11, *Complaint of Possible Prohibited Personnel Practice or Other Prohibited Activity,* Rev. 8/00), together with a copy of any continuation sheet with answers to Part 2 questions filed with the Office of Special Counsel, and any supplement to Part 2 of the original complaint filed with the Office of Special Counsel or completed by the Office of Special Counsel and furnished to the appellant.

* * * * *

Dated: November 6, 2000

Robert E. Taylor,

Clerk of the Board.

[FR Doc. 00–28823 Filed 11–9–00; 8:45 am]

BILLING CODE 7400–01–P

DEPARTMENT OF AGRICULTURE

Commodity Credit Corporation

7 CFR Part 1424

RIN 0560–AG16

Bioenergy Program

AGENCY: Commodity Credit Corporation, USDA.

ACTION: Final rule.

SUMMARY: The Commodity Credit Corporation (CCC) is adopting as final the proposed rule published July 27, 2000, in the **Federal Register** to accelerate the development and use of bio-based technologies in stimulating the industrial use of agricultural commodities into bio-based fuels and products. CCC will make incentive cash payments to bioenergy producers who increase their purchases of eligible agricultural commodities, as compared to the corresponding period in the prior fiscal year (FY), and convert that commodity into increased bioenergy production.

EFFECTIVE DATE: This program will become effective December 1, 2000. The FY 2001 sign-up period will begin that day and will end December 31, 2000.

FOR FURTHER INFORMATION CONTACT: Steve Gill, Director, Warehouse and Inventory Division, FSA, United States Department of Agriculture (USDA), STOP 0553, 1400 Independence Avenue, SW., Washington, DC 20250–0553, telephone (202) 720–2121 or e-mail address, Steve_Gill@wdc.fsa.usda.gov or Jim Goff at (202) 720–5396. Persons with disabilities who require alternative means of communication for regulatory information (braille, large print, audiotape, etc.) should contact USDA's TARGET Center at (202) 720–2600 (voice and TDD).

SUPPLEMENTARY INFORMATION:

Executive Order 12866

This rule has been determined to be economically significant for the purposes of Executive Order 12866 and therefore has been reviewed by the Office of Management and Budget (OMB). A summary of the cost-benefit assessment is included in the Background section explaining the actions this rule will take.

Small Business Regulatory Enforcement Fairness Act

This rule was determined to be Major under the Small Business Regulatory Enforcement Fairness Act of 1996 (SBREFA). Section 801 of SBREFA requires a 60-day delay for Congressional review before Major regulations can go into effect. However, section 808 of SBREFA allows an agency to promulgate a rule at such time as it determines necessary, notwithstanding the Congressional review required by section 801 of SBREFA, if the agency finds for good cause that it is impracticable, unnecessary, or contrary to the public purpose to delay the rule. It is hereby determined that delaying this rule would be contrary to the public interest and, accordingly, this rule is effective December 1, 2000.

Regulatory Flexibility Act

It has been determined that the Regulatory Flexibility Act is not applicable to this rule because CCC is not required by 5 U.S.C. 553 or any other provision of law to publish a notice of proposed rule making with respect to the matter of this rule.

Executive Order 12372

This program is not subject to the provisions of Executive Order 12372, which requires intergovernmental consultation with State and local officials. See the notice related to 7 CFR part 3015 subpart V published at 48 FR 29115 (June 24, 1983).

Environmental Assessment

An environmental assessment has been completed and it has been determined that there will be no significant impact on the environment.

Executive Order 12988

This rule has been reviewed in accordance with Executive Order 12988, Civil Justice Reform. All State and local laws and regulations that are in conflict with this rule will be preempted. No retroactive effect will be given to this rule. It will not effect agreements entered into prior to the effective date of the rule. The administrative appeal provisions published at 7 CFR parts 11 and 780 must be exhausted before bringing any action for judicial review.

Executive Order 12612

It has been determined that this rule does not have sufficient Federalism implications to warrant the preparation of a Federalism Assessment. The provisions contained in this Rule will not have a substantial direct effect on States or their political subdivisions or on the distribution of power and responsibilities among the various levels of Government.

Unfunded Mandates Reform Act of 1995

This Rule contains no Federal mandates under the regulatory provisions of Title II of the Unfunded Mandates Reform Act of 1995 (UMRA) for State, local, and tribal governments or the private sector. Therefore, this rule is not subject to the requirements of sections 202 and 205 of the UMRA regulations.

Paperwork Reduction Act

The information collection reporting and recordkeeping requirements associated with this rulemaking have

been approved by OMB and assigned control number 0560-xxxx. A **Federal Register** notice for this information collection was published on July 27, 2000. No comments were received.

Background

To encourage bioenergy producers to expand agricultural markets by promoting increased bioenergy (ethanol and biodiesel) production, CCC, in accordance with Executive Order 13134, Developing and Promoting Biobased Products and Bioenergy, and the CCC Charter Act, will make incentive cash payments to bioenergy producers who increase their purchases of agricultural commodities over the previous fiscal year's (FY's) purchases and convert that commodity into increased ethanol and biodiesel production over previous FY ethanol and biodiesel production. This rule provides for payments on purchases of barley, corn, grain sorghum, oats, rice, wheat, soybeans, sunflower seed, canola, crambe, rapeseed, safflower, sesame seed, flaxseed, mustard seed, and cellulosic crops, such as switchgrass and short rotation trees, grown on farms, for the purpose of producing ethanol and or biodiesel used in either ethanol or biodiesel production.

Eligible bioenergy producers will receive incentive cash payments quarterly, based on the producer's total annual bioenergy production increase for the FY to date compared to the same time period in the previous FY. If, at the end of the fourth quarter, overpayments have been made, the bioenergy producer shall repay the overpayment plus interest from the date of the overpayment through the date of repayment to CCC. Eligible bioenergy producers with less than 65 million gallons annual production capacity from all facilities will receive a higher effective payment rate than bioenergy producers with 65 million gallons or more annual production capacity to increase the incentive for smaller plants and thereby further promote expansion of bioenergy production. A higher incentive is needed for smaller plants because, compared to larger plants, they tend to produce a more limited product range during refining, are less able to capture economies of scale, and may not have access to attractive risk management strategies.

Except for FY 2001, bioenergy producers will enter into annual agreements with CCC establishing their eligibility to receive program payments before September of the preceding FY. Once an agreement is entered into, eligible bioenergy producers will submit quarterly applications after the end of each quarter requesting payments for that quarter. For example, during January 2002, producers may request payments for the period beginning October 1, 2001 through December 31, 2001. CCC will make payments to eligible bioenergy producers within 30 calendar days of receiving a completed eligible application.

CCC will make available up to $150 million in FY 2001 and $150 million in FY 2002 for this program. Because payment requests could potentially exceed available program funding, producers will be required to complete an agreement during a sign-up period to be announced by CCC for each FY of the program. The agreement will include an estimate of increased production for the upcoming FY. The total estimated increase in production for the upcoming FY will be used to determine if payment requests will exceed funding. If so, a factor will be used to prorate payments to keep payments at or below the budgeted amount. Eligible producers (agreement holders) will submit applications for program payments after each FY quarter. A producer will enter into a single agreement covering all production facilities operated or planned to be operated during the applicable FY by the producer at sign-up. However, agreement holders must submit separate applications for each facility location each quarter once enrolled in the program. Applicable payments will be based on the total production increase from all facilities FY to date, reconciled each quarter, compared to the producer's production at all locations during the base period. Producers who anticipate having new or expanded production capacity on line during the FY applicable to the sign-up period should enroll that anticipated production increase in the program during sign-up.

Payments under the program will be based on the expected additional amount of agricultural commodities used by producers to produce additional energy. Interested parties will be required to sign up for the program and the total amount of expected claims will then be prorated, as needed, to match the available funding. Actual payments will be made on a quarterly basis by converting the extra fuel production to a gross extra commodity amount by using a factor set by CCC which estimates the amount of corn or other eligible commodity that was used to produce the increase in bioenergy. That figure will then be reduced to payable bushels or other unit of production. For smaller firms, as specified in the rule, payable bushels will be 1 bushel for every 2.5 gross bushels. For larger firms, it will be 1 bushel for every 3.5 gross bushels. Subject to the proration factor referred to above, a producer's payable bushels will be multiplied by a current (at the time) per bushel dollar amount to reach the payment amount. However, rising commodity prices could mean that funding is exhausted, despite the proration, before the end of the year. Should that happen, the agency will determine the manner in which it will resolve the competing claims but in no case will total payments exceed available funding. All participants will be required to sign an agreement that will set out the terms of the payment and the refund obligations that will apply if the additional commodity use levels are not obtained. The agreement will also set out whatever additional terms and conditions appear to be appropriate to assure that the program obtains its objectives. In all cases, the amount of the payment to which the producer remains eligible will be based on the increases in the energy produced for the year to date (as accounted for each quarter). Hence, changes in production could mean that payments received earlier in the year may have to be returned.

Bioenergy producers, to be eligible for this program, must meet additional requirements specific to the bioenergy fuel being produced. For example, ethanol producers must also be licensed by the Bureau of Alcohol, Tobacco, and Firearms (ATF) for fuel ethanol production.

Proposed Rule

A proposed rule addressing this matter was published in the **Federal Register** (65 FR 46115) on July 27, 2000. Comments from interested parties were due on or before August 28, 2000. A total of 123 comments were received from 6 different sectors as follows: three Government; 16 ethanol and biodiesel organizations; three Congressional; 17 industry (processors, plants, banks, accounting firms and cooperatives); 31 renderers; and 53 individuals. Comments submitted varied widely in support for the proposed rule. Forty-three supported the rule as written, while all 31 renderers were strongly opposed to the program unless substantial changes are made to include rendered animal by-products and recycled cooking oils as eligible for program payments. Most renderers mentioned in some way perceived unfairness because the grain commodities already are eligible for other USDA program benefits while renderers and recycled products are not eligible.

The proposed rule asked for comments on 8 specific questions. These questions and the responses to them are as follows:

1. Producers of What Forms of Bioenergy Should be Eligible for Program Payments?

Ethanol and biodiesel were included in the proposed rule.

Comments: The majority of comments (43) supported making payments to only ethanol and biodiesel producers. The remainder of commentators suggested various alternatives such as: focusing incentives on expansion of alternative fuels; transferring funds from farm level price support subsidies to programs such as this to refocus payments for crops used in bioenergy production; adding E–85 (a blend of 85 percent ethanol and 15 percent gasoline); limiting program to biodiesel and ethanol produced from domestic feed stocks; adding E-diesel (less than 5 percent additive and diesel fuel); changing the word gasoline in the definition of ethanol to denaturant; limiting biodiesel producers to commercial producers registered and in good standing with Environmental Protection Agency (EPA) under section 211(b) of the Clean Air Act Amendment of 1990.

Response: As supported by the majority of comments received, the program will only cover ethanol and biodiesel production in the US from commodities produced in the US. This has remained unchanged so that the effect of this program will not be diluted but will be confined to traditional uses of those commodities which could, otherwise, produce inventories of goods that would have to be stored at government expense. However, definitions of ethanol and biodiesel fuel have been broadened and requirements have been added to address comments received about E-diesel, the use of gasoline as a denaturant, and to assure that eligible biodiesel producers meet EPA regulatory requirements. No change was made regarding adding E–85 since payments will only be made on increased ethanol production and the percentage of blend with gasoline will not be a factor.

2. What Agricultural Commodities Used in Bioenergy Production Should be Included in the Program?

The proposed rule listed barley, corn, grain sorghum, oats, rice, wheat, soybeans, sunflower seed, canola, crambe, rapeseed, safflower, flaxseed, and mustard seed used in either ethanol or biodiesel production.

Comments: The majority of respondents were in favor of the proposed eligible commodities. However, we did receive comments favoring the inclusion of sugar and commodities for which there is another statutory program so that incentive payments for using that commodity in this Program will result in lower costs in other Programs in the form of loan deficiency payments (LDP's), forfeitures, storage costs, or other payments to farmers. We also received many (31) letters from renderers recommending the inclusion of animal fats and oils and certain recycled products of these fats and oils as eligible commodities in the Program. Additional items that were suggested to be added to the definition were as follows: tobacco, peanuts, cellulosic crops such as switchgrass, crop residues (such as corn stover), forest residue, non-recyclable cellulosic solid waste (i.e. waste paper), cotton waste, sustainable forest thinning material, soybean wax, and other biomass materials. One respondent was against including recycled and waste products as eligible commodities.

Response: In response CCC has decided to add cellulosic crops, such as switchgrass and short rotation trees, grown on farms for the purpose of producing ethanol or biodiesel to the eligible commodity definition. This change allows CCC to support crops with excellent long-run potential for increasing the Nation's supply of ethanol and biodiesel and are the basis for much of USDA's efforts under the President's Bioenergy Initiative and the Biomass Research and Development Act of 2000. While we have an interest in supporting a broad bioenergy industry, the addition of other items proposed needs further analysis and public comment. We plan to specifically request comments on adding animal fats and oils that are first used in ethanol and biodiesel production to this program. For the reasons given earlier, this rule will for the time being focus on field crops for which marketing assistance is provided and which are more customarily the focus of the use of agricultural products to produce ethanol and biodiesel fuel.

3. At What Plant Capacity Level Should Program Payment Rates Change to Account for Plant Efficiency Variances by Eligible Program Commodity?

The proposed rule suggested making larger payments to producers with less than 30 million gallon-per-year capacity than to plants with 30 million gallon or more capacity.

Comments: Several respondents indicated that, while the 30 million gallons per year limit has been the ''traditional'' definition of a ''small'' ethanol producer, time and technology have changed. One respondent stated, ''In a country where there are at least five ethanol plants that can produce at least 100 million gallons per year, a 31 million gallon plant is by no means a large producer and should not be categorized as one for the sake of this program.'' Since 1990, the majority of the industry's growth has been in smaller, farmer-owned cooperatives. Today, many of these facilities are looking to expand their initial output to more than 30 million gallons per year to take advantage of plant efficiencies, economies of scale, and potential new market demand. The majority of respondents commenting in this area felt the level should be raised to 65 million gallons per year. We also had individual comments to: cap payments to plants with 150 million gallon-per-year production capacity; provide a reduced payment to firms with multiple facilities; and provide the smallest incentives to firms with largest capacities that also have other production.

Response: We agree with the majority of respondents and this rule provides for more advantageous payments to producers with less than 65 million gallons-per-year capacity than to producers with 65 million gallons or more capacity. This level appears to be a reasonable line of demarcation, based on the comments, between those producers who may need an extra incentive and those that do not. Under the terms of the rule, that extra incentive will, as indicated, mean that smaller firms will receive payment on a higher percentage of their extra purchases of agricultural commodities. As for capping payments at 150 million gallons per year capacity by producer or considering the number of other production sites, we believe neither would help accomplish the purpose of the program which is increased bioenergy production. In addition, by having a five percent payment limitation, we will restrict payments to very large producers so funding is available to more producers.

4. How Should Payment Rates Be Established, Especially for Commodities Without CCC Announced Terminal Market Prices?

The proposed rule limited payments to commodities with established CCC announced terminal prices.

Comments: A few respondents suggested: establishing a separate budget for biodiesel and ethanol; changing the time period used in

comparison to determine increase in production; and, structuring payments to allow plant construction or expansion. Individual respondents suggested: considering a flexible mechanism in adjusting payment formulas to maximize removal of commodities from markets; using daily prices by region or area for payments; establishing terminal market prices for those commodities without them or using an average of recent prices paid by the producers.

Response: While the suggestion that the time period for comparison be changed, there was no consensus what would be better and the vast majority of respondents recommended no change to the program. Therefore, the comparison time period remains FY compared to the prior FY. However, the formula has been adjusted from a quarterly comparison to FY to date as the FY progresses to level out payments between quarters and reduce the need for end of FY repayments. CCC considered the comments on structuring the payments to allow plant expansion and construction and concluded that the program as proposed met those goals in the short term. Since CCC cannot predict the amount of either ethanol or biodiesel production that will be covered by the program, we do not feel we can accurately establish a separate budget for ethanol versus biodiesel. The sign-up will decide how funding is divided between the two. Based on the limited comments received, no change has been made from the proposed rule in this area. However, since terminal market prices and county differentials are not available for cellulosic crops, such as switchgrass and short rotation trees, grown on farms for the purpose of producing ethanol and or biodiesel that have been added as eligible commodities, CCC will announce how payment rates will be established on these commodities after sign-up occurs and CCC knows payments will be applicable on the commodity.

5. When Payments Are Limited, How Should Payments Be Distributed?

The proposed rule asked for comments on how payments should be prorated in the event that the program should be oversubscribed in the sense that there might be more willing participants than the normal payment formulas and funding would allow. It was contemplated in that respect, however, that there would be a sign-up period so that all interested parties could make their interest known so that the amount of proration could be then adduced. The proposed rule suggested several methods for dealing with shortage in funding.

Comments: We received a variety of comments on how to distribute payments including: supported prorating payments; advance 90 percent of expected payments quarterly with final payments reflecting the balance due; limit the total dollars any one entity could receive; limit program to 30 million gallon-per-year capacity producers; issue payments on a first come first paid basis; and, limit payments to corporations with 125 million gallon-per-year capacity or less capacity for program participation.

Response: Based on comments received, we believe the procedure in the proposed rule is best. Therefore, there will be a sign-up period and a proration made on the basis of that sign up as otherwise there would be an overemphasis on early filings. As for limitations on payments to particular entities, while there is a desire to avoid over-concentration of the payment to one or several entities, it was felt that goal is met by setting, in the rule, a limit on the annual amount of program funding that could be received by a particular party.

6. Should the Payment Formulas Be Adjusted if There Is an Under Subscription of the Program, so as to, in Effect, Allow Payments at Higher Than the 100 Percent of Formula Level Contemplated in the Proposed Rule?

Comments: A few respondents stated the cap should be 100 percent. Other individual respondents stated that payments should be prorated provided all other criteria are met and a payment cap would not be necessary if bid offer system was used to establish payments.

Response: The payment ''cap'' will stay at 100 percent of formula amount since it appears for now to provide a sufficient incentive for increased production of energy resources using grains and other eligible agricultural commodities. A bid offer system is discussed below under ''Change the way payments are established''.

7. How Should Increases in Bioenergy Production be Established for the Various Commodities Receiving Program Payments?

The proposed rule compared ethanol and biodiesel production for the just completed FY quarter to the production from the same quarter in the prior FY.

Comments: Individual comments received in response to this question included: base program payments on the percentage increase in eligible domestic crop purchases and renewable energy production; proposed rule considers purchases and production from existing nonproducing plants as increases; payments should reflect changes in feedstock components and commodity prices based on volume and input cost of product.

Response: The final rule compares the producer's agricultural commodity energy production at all locations with that producer's production in the previous year at all locations. For the first quarter of the year, energy production will be compared with the production from the first quarter of the previous year. After that quarter, the comparison will be made as a running total. That is, for example, at the end of the third quarter, the payment will be based on the increase in bioenergy for all three quarters, not just the third quarter by itself. This will reduce the need for any producer repayments at the end of the FY. At the same time, it will encourage producers to immediately begin their process of increasing their use of agricultural commodities and increasing their energy production. We concur with the comment that this considers purchases and production from existing nonproducing plants as increases and believe that meets the program's goal of increasing bioenergy production. We also believe that the procedure for establishing program payments addresses the other comments.

8. What are the Expected Impacts of This Program on Agricultural Commodity Prices, Fossil Fuel Energy Prices, Farm Income, Bioenergy Production and Prices, and International Trade in Agricultural and Energy Products?

Comments: The majority of respondents that commented (54) stated the program would have a positive impact in these areas. One respondent mentioned the program would provide a market for aflatoxin corn.

A large group of respondents (33) felt the program would have a negative impact in these areas. A couple of respondents stated the program would have a minimal impact in these areas. Specific single negative comments stated the program would: pay incentives for capacity and demand that would have occurred anyway; encourage the building of small plants that may not be financially viable; have a side effect of restraining bioenergy production; discourage construction of new plants or put recently completed plants at a disadvantage; attempt to reward production increases but instead creates uncertainty; and, result in some ethanol and biodiesel production facilities not receiving payments since

they are already at 100 percent production capacity. One respondent advised against the adoption of the proposed rule as currently written.

Several respondents suggested changing the program as follows: emphasize the soy-based biodiesel industry; increase program's life-span to 3 to 6 years; issue Payment-in-Kind (PIK) certificates instead of cash payments; target low-income areas of the county; and, use a per-capita basis for allocating funds.

Additionally some individual respondents suggested that USDA instead of proceeding with the program should: conduct an assessment of impacts on country grain elevators and feed mills before proceeding; establish a strategic corn reserve to remove corn from the market during periods of low prices; and, establish a limited farmer-stored reserve program dedicated to bioenergy feed stock.

Response: We agree with the positive comments received and agree that ethanol production does provide a market for aflatoxin corn. The negative comments question the wisdom of the program as it was proposed. USDA has in that respect conducted what it believes to be a thorough evaluation of the program and believes that these incentives will in fact produce appropriate and needed increases in energy production and commodity use. Should the operation of the program have any of the negative impacts cited by respondents or other negative impacts, a reassessment will be made and changes will be made as needed. We believe the program will have a positive impact and therefore it is being implemented. Current available funding does not allow CCC to extent the guaranteed life of the program beyond FY 2002. CCC does not have the inventory needed to support changing payments from cash to PIK. Changing the program to target low-income areas or base payments on a per-capita basis would be counter to the program's goal of increasing bioenergy production as much as possible. Establishing a strategic corn reserve and or a limited farmer-stored reserve program are outside the scope of this rule.

In addition to comments on the eight specific questions above, comments were also received on the following issues:

1. Unspent Funding Allocations for FY 2000

Comments: A few respondents wanted CCC to commit the $100 million for FY 2000 retroactively.

Response: Originally it was hoped that this program would be operated in FY 2000 but that has not proved to be possible. Any retroactive payments would, at this time, not be an incentive payment and thus would not be consistent with the nature of this program.

2. Change Payment Restriction

Under the proposed rule no person could receive more than 10 percent of the total funding available under the program.

Comments: Several respondents supported some level of payment limitation. However, a number of respondents favored changes that would increase the number of firms that could receive payments. Comments made by these respondents included: limit gross amount of funding for each large producer to an equitable percent of funding; lower the payment limitation to 8 percent; lower payment limitation to 5 percent; and change payment limitation to per corporation capacity of 125 million gallons per year ethanol. Additionally comments received suggested: having a separate biodiesel payment limitation of 30 percent; limiting payments by single company; and not having a payment limitations.

Response: In order to increase the number of producers that can enroll in the program, the payment restriction has been lowered to five percent of total funding so payments will be available to a greater number of producers, and the rule has been clarified that the restriction is by producer for all plants. Without sign-up data and long range commodity price forecasts, we cannot predict what limitation the five percent will establish on producer size or justify establishing a separate limitation for biodiesel producers.

3. Records Inspection

Comments: Inividual respondents commented that production increases should be verifiable by documentation and record retention should be reduced to only 3 years.

Response: We agree with both comments. Record retention has been reduced to 3 years in section 1424.11(b) and the rule requires documentation be kept to support all program payments.

4. Change the way Payments Are Established

Comments: One respondent suggested that a reverse auction similar to the Conservation Reserve Program should be used so producers would bid on payments per unit of increased bioenergy production. Another respondent questioned whether the program should expand the use of terminal market prices.

Response: We believe a reverse auction would favor large plants at the expense of others and would be contrary to the goals of the program to encourage greater production among all producers and to encourage diversity in production by providing greater incentives to smaller plants. While one respondent questioned using terminal market prices in this program, we consider using them whenever possible as the best option for the program.

5. Change Payment Amounts

Comments: A respondent suggested basing payment on grain use instead of increased bioenergy production.

Response: The primary goal of the program is to increase bioenergy production and, as structured, payments will also reflect increased commodity use.

6. Clarify Definition of Producer

Comments: A respondent asked that we clarify the difference between producer and facility.

Response: We agree that there was ambiguity in the proposed rule between these two terms. The definition of producer has been modified to say that a producer is a legal entity (individual, partnership, cooperative, or corporation, etc) who is a producer of bioenergy. Clarification has also been made throughout this rule that payment restrictions apply by producer and payments.

Changes From Proposed Rule

CCC is adopting as final the proposed rule published July 27, 2000, in the **Federal Register** with the following changes. First, most of the major payment provisions, for purposes of clarity, have been concentrated in one section rather than spread throughout the regulation, including that portion of the regulation that contains definitions. In that connection, the provision allowing smaller producers to be paid on a higher percentage of the extra units of the agricultural commodity they use for extra energy production has been changed so that the dividing line between small and large producers has been raised from a 30 million gallon per year energy production level to a 65 million gallons per year production level. Also the regulations now reflect that quality factors can be used in determining per unit payment rates for the payable units of the commodity. Also, the proration provision has been amended to correct an error in the original formula and to assure that the proration is as accurate as possible. In that respect as well, terms have been adjusted and reorganized. In addition,

the amended rule, in order to help assure real increases in the use of agricultural commodities to produce fuel, provides that in accounting for production the producer must aggregate production by all persons (not just the producer) at all locations in which the producer had an interest now (in the current FY) or in the previous FY, irrespective of whether the producer still has such an interest in that facility. This will avoid situations in which there could otherwise be an artificial increase due to a mere reorganization or change of ownership, or shift of production from one plant to another. CCC will be able to grant exemptions to that requirement should a need arise. Also, the rule provides that CCC may, in the program agreement, require that the producer certify the amount of the actual increased use of agricultural commodities for energy production at all such locations for the relevant period and make an adjustment in the formulaic payments that would otherwise be made to the producer if there is a difference between that certification and the amount of increased commodity use as calculated under the formula. A provision has also been added which would allow persons who acquire facilities under contract to petition CCC to be permitted to succeed to the existing contract. Still further, a provision has been added to specify that a contract may be terminated if the contracting party fails to retain the ability to assure that the contract obligations and responsibilities will be met over the full life of the contract. of payment to provide greater clarity. Further:

(a) In § 1424.3 the following definitions are changed:

(1) The definition of *biodiesel producer* will require commercial biodiesel producers to also be registered and in good standing with EPA under the Clean Air Act Amendment of 1990, Title II, Section 211(b).

(2) The definition of *eligible commodity* has been expanded to include sesame seed and cellulosic crops, such as switchgrass and short rotation trees, grown on farms for the purpose of producing ethanol and or biodiesel.

(3) The definition of *ethanol* has been changed to state that it ''has been rendered unfit for beverage use'' instead of composed of 95 percent ethanol and 5 percent gasoline.

(4) The definition of *producer* has been clarified to be ''a legal entity (individual, partnership, cooperative, or corporation, etc) who is a commercial producer of bioenergy making application under this program.''

(b) 1424.4(a) has been changed to indicate that Agreement forms may be also obtained via the internet.

(c) 1424.4(b) has been changed to indicate that Form CCC–850, Bioenergy Program Agreement, must be submitted to KCCO, Contract Reconciliation Division, STOP 8758, P.O. Box 419205, Kansas City, Missouri 64141–6205;

(d) 1424.5(b) has been changed to indicate Applications are also available via the internet.

(e) 1424.5(c) has been changed to remove the requirement that applications must be submitted within 30 days of the end of a quarter. It now just states that applications must be submitted by 30 days after the end of the applicable FY.

(f) 1424.8(a) has been changed to indicate that unused funds for any FY will not be reallocated and, therefore, will not be carried over.

(g) 1424.8(b) has been changed to state that reconciliations will be year-to-date for each quarter of the FY.

(h) 1424.8(e) has been changed to indicate that no producer may receive more than five percent of the available funding for this program and determinations of payment eligibility shall take that limit into account.

(i) 1424.9 has been changed to indicate that once an eligible producer has submitted an Agreement, Form CCC–850, that producer shall file information for each bioenergy producing facility quarterly through the end of the applicable FY as specified by CCC.

(j) 1424.11 b has been changed to require record retention for 3 years (instead of 6) from the payment date.

Cost-Benefit Assessment

The program is projected to provide significant benefits for the agricultural sector. It will expand existing demand for corn and other grains used in ethanol production, and create new markets for oilseed crops, particularly soybeans, through the stimulation of biodiesel production. Impacts of the program were estimated under two scenarios, a low-impact scenario with no other significant policy changes that would increase biofuels demand, and a high-impact scenario, with other policy and program changes in addition to the program that collectively would substantially increase demand for ethanol and biodiesel. Incentive payments during FYs 2001–2002 for the program are expected to range from about $57 million under a low-impact scenario to about $164.2 million under a high-impact scenario.

Under the low-impact scenario, average farm prices for corn are projected to increase by 1 cent per bushel in marketing year 2000/01 and increase by 2 cents per bushel in 2001/02. For soybeans, average farm prices are projected to remain unchanged in marketing year 2000/01 and increase by 1 cent per bushel in marketing year 2001/02. CCC outlays (including direct payments under the program) for feed grains and soybeans are projected to decrease by $258 million during FYs 2001–2002.

Under the high-impact scenario, average farm prices for corn are projected to increase by 1 and 4 cents per bushel in marketing years 2000/01 and 2001/02 respectively. Soybean farm prices are projected to increase by 1 and 4 cent per bushel in marketing years 2000/01 and 2001/02, respectively. CCC outlays (including direct payments under the program) for feed grains and soybeans are projected to decrease by $355 million during FYs 2000–2002.

Under the low-impact scenario, ethanol production is projected to reach about 1.730 billion gallons by 2002, about 95 million gallons higher than the baseline level. Biodiesel fuel production is projected to reach about 7 million gallons, 5 million gallons above base levels. Under the high-impact scenario, ethanol production is projected to reach about 1.940 billion gallons by 2002, or about 305 million gallons above baseline levels. Biodiesel fuel production is projected to reach about 14 million gallons, 12 million gallons above the baseline levels.

The small increases in feed costs resulting from the program would not be sufficient to significantly affect livestock and poultry production. Thus, no impacts are expected on consumer prices for meat and poultry products.

Ethanol and biodiesel processors benefit from the program by having reduced production costs. Providing more supply with reduced production costs is expected to increase net returns for participating processors. Minimal effects are expected on ethanol and biodiesel market prices as these prices are largely determined by fossil-based liquid fuel prices. Increased ethanol and biodiesel production is expected to substitute for Methyl Tertiary Butyl Ether (MTBE) and imported oil, helping to achieve the Administration's goals for reducing MTBE use and increasing energy security.

List of Subjects in 7 CFR Part 1424

Administrative practice and procedure, Energy—bioenergy, Reporting and recordkeeping requirements.

For the reasons stated in the preamble, 7 CFR Part 1424 Chapter XIV

is amended by adding Part 1424 as set forth below.

PART 1424—BIOENERGY PROGRAM

Sec.
1424.1 Applicability.
1424.2 Administration.
1424.3 Definitions.
1424.4 General eligibility rules.
1424.5 Application process.
1424.6 Eligibility determinations.
1424.7 [Reserved]
1424.8 Payment amounts.
1424.9 Reports required.
1424.10 Succession and control of facilities and production
1424.11 Maintenance and inspection of records.
1424.12 Appeals.
1424.13 Misrepresentation and scheme or device.

Authority: 15 U.S.C. 714 c (e); Section 5(e) of the Commodity Credit Corporation Charter Act.

§ 1424.1 Applicability.

This part establishes the Bioenergy Program (Program). It sets forth the terms and conditions a bioenergy producer must meet to obtain payments from the Commodity Credit Corporation (CCC) for eligible bioenergy production. Additional terms and conditions are set forth in Form CCC–850, Bioenergy Program Agreement.

§ 1424.2 Administration.

(a) On behalf of CCC, the Farm Service Agency (FSA) will administer the provisions of this part under the general direction and supervision of the Deputy Administrator, Commodity Operations (Deputy Administrator), FSA.

(b) The Deputy Administrator or a designee may authorize a waiver or modification of deadlines and other program requirements in cases where lateness or failure to meet such other requirements does not adversely affect the operation of the Program, and may set such additional requirements as will facilitate the operation of the program.

§ 1424.3 Definitions.

The definitions set forth in this section shall be applicable for all purposes of program administration under this subpart.

Agreement means the Bioenergy Program Agreement, Form CCC–850.

Application means the Bioenergy Program Application, Form CCC–850–A.

ATF is the Bureau of Alcohol, Tobacco and Firearms of the Department of the Treasury.

Biodiesel is a nontoxic, biodegradable replacement for or additive to petroleum diesel derived from the oils and fats of plants and animals and manufactured in the United States. Chemically, biodiesel is described as a mono alkyl ester.

Biodiesel producer is a producer that produces and sells biodiesel who is also registered and in good standing with Environmental Protection Agency under Clean Air Act Amendment of 1990, Title II, Section 211(b).

Bioenergy means ethanol and biodiesel produced from eligible commodities.

Eligible commodity means barley, corn, grain sorghum, oats, rice, wheat, soybeans, sunflower seed, canola, crambe, rapeseed, safflower, sesame seed, flaxseed, mustard seed, and cellulosic crops, such as switchgrass and short rotation trees, grown on farms for the purpose of producing ethanol and or biodiesel or any other commodity or commodity by-product as determined and announced by CCC used in ethanol and biodiesel production which is produced in the United States and its territories.

Eligible producer means a bioenergy producer who has been determined by CCC to be eligible to receive Program payments and has entered into an Agreement with CCC.

Ethanol is anhydrous ethyl alcohol manufactured in the United States and sold:

(1) For fuel use and which has been rendered unfit for beverage use in a manner and which is produced at a facility approved by the ATF for the production of ethanol for fuel, or

(2) As denatured ethanol used by blenders and refiners which has been rendered unfit for beverage use.

Ethanol producer is a producer that has authority from the ATF to produce ethanol.

FSA means the Farm Service Agency, USDA.

FY means fiscal year beginning each October 1 and ending September 30 of the following year.

Gallon Conversion factor shall be:

(1) 2.5 bushels, unless otherwise determined through review of an individual Program participant by CCC, of ethanol produced per bushel of corn used in ethanol production;

(2) 1.4 bushels, unless otherwise determined through review of an individual Program participant by CCC, of biodiesel per bushel of soybeans used in biodiesel production; or

(3) As determined by CCC for other eligible commodities.

KCCO means Kansas City Commodity Office.

Producer is a legal entity (individual, partnership, cooperative, or corporation, etc.) who is a commercial bioenergy producer making application under this program.

Quarter means the respective time periods of October 1 through December 31, January 1 through March 31, April 1 through June 30, and July 1 through September 30 of each FY, as applicable.

USDA means the United States Department of Agriculture.

§ 1424.4 General eligibility rules.

To obtain Program payments, a producer must do all of the following:

(a) Obtain an Agreement, Form CCC–850, from the KCCO, Contract Reconciliation Division, STOP 8758, P.O. Box 419205, Kansas City, Missouri 64141–6205 or via the internet at: www.fsa.usda.gov/daco/bioenergy/bioenergy.htm;

(b) Submit a completed Agreement, Form CCC–850, to CCC no later than October 1 of each year or a later date, if announced by CCC, to KCCO, Contract Reconciliation Division, STOP 8758, P.O. Box 419205, Kansas City, Missouri 64141–6205;

(c) Be assigned an Agreement number by KCCO indicating the producer is eligible for program payments;

(d) Maintain records indicating:

(1) Commodities for which it seeks payment;

(2) The quantity of bioenergy produced from an eligible commodity by location during the quarter FY to date compared to the same time period in the previous FY; and

(3) The quantity of eligible commodity used to produce the bioenergy stated in paragraph (d)(2) of this section during the quarter FY to date compared to the same time period in the previous FY;

(e) Furnish CCC such certification, and access to such records, as CCC considers necessary to verify compliance with Program provisions;

(f) Make Application submissions in accordance with § 1424.9;

(g) If not purchasing raw commodity input, be able to prove to CCC's satisfaction that both the producer's net purchases of eligible commodities and net production of bioenergy increased as compared to such production at all locations during the relevant base period. Except as otherwise provided for by CCC, the increase in production must equal or exceed that amount of energy production which would be calculated using the gross amount of agricultural commodities which forms the basis of the payment and the conversion factor set out in § 1424.2. Example: A producer that purchases soy oil from a soybean crushing plant for further refinement into biodiesel must be able to prove to CCC's satisfaction that both soy oil purchases and biodiesel production increased for the applicable quarter;

(h) Certify the accuracy and truthfulness of the information provided in their Agreement on Form CCC–850; and

(i) Allow verification by CCC of all information provided. Refusal to allow CCC or any other agency of USDA to verify any information provided will result in a determination of ineligibility.

(j) Meet all other conditions for payment which are set out in the Agreement or in these regulations or otherwise.

§ 1424.5 Application process.

To receive payments under this program during a FY, an eligible producer must:

(a) Have an approved Agreement in accordance with § 1424.4(b) and an Agreement number assigned by KCCO under § 1424.4(c);

(b) Obtain an Application, Form CCC–850–A, from the KCCO, Contract Reconciliation Division, STOP 8758, P.O. Box 419205, Kansas City, Missouri 64141–6205 or via the internet at: www.fsa.usda.gov/daco/bioenergy/bioenergy.htm;

(c) Submit applications for each quarter. Submit the last quarterly application of the FY within 30 calendar days of the end of the FY for which payment is requested. If the actual deadline is a non-workday, the deadline will be the next business day;

(d) Submit other relevant documents as required by CCC for the specific commodity; and

(e) Certify with respect to the accuracy and truthfulness of the information provided.

§ 1424.6 Eligibility determinations.

(a) Applicants will, after Agreements are submitted, if:

(1) Determined eligible, receive notification of eligibility;

(2) Determined ineligible, be notified in writing of ineligibility for program participation and reason for the determination; or

(3) Additional information is needed for CCC to determine eligibility, be contacted for additional supporting documentation.

(b) Applicants will, after Applications are submitted, if:

(1) Determined eligible, receive payment;

(2) Determined ineligible, be notified in writing of ineligibility for payment and reason for determination; or

(3) Additional information is needed for CCC to determine eligibility, be contacted for additional supporting documentation.

§ 1424.7 [Reserved]

§ 1424.8 Payment amounts.

(a) Eligible producer may be paid the amount specified in this section, subject to the availability of funds. Funds shall be considered available only to the extent determined appropriate by CCC. Unless otherwise determined by CCC, that amount shall be no more than $150 million in FY 2001 and no more than an additional $150 million in FY 2002.

(b) Eligible producer must sign an agreement to participate. Such an agreement must be signed during the designated sign-up period. Thereafter, producers must file a report of their production at all locations for the program year to date through the respective quarter for each such report. Such reports must comply with the terms of the agreement and these regulations.

(c) Persons will be eligible for payments only to the extent that their production of eligible energy from eligible inputs is, for the program year to date, as compared to the comparable portion of the previous year, in excess of their total comparable production at all locations. Producers will not be paid twice for the same increase and any decline in relative production between quarters will require a comparable refund as specified below. That is, for example, if a producer were to be paid, at the end of the first quarter, for an increase of 500 units of energy production, but by the end of the second quarter that producer's production, for the year to date, was down to a net increase for the year of 450 units, then a refund would be due for the loss of the corresponding 50 units of net extra production. For these purposes unless CCC shall agree otherwise in order to facilitate the program, ''all locations'' for these and other purposes within these regulations shall mean any and all locations in which the producer had an interest now (in the current FY) or in the previous FY, irrespective of whether the producer still has such an interest in that facility. Eligibility determinations will be made on the basis of aggregating production figures from all such locations and shall include production by all persons at those locations for the current and preceding FY, not just the production of the producer. Also, the CCC may in the program agreement require that the producer certify the amount of the actual increased use of agricultural commodities for energy production at all such locations for the relevant period and make adjustment in the formulaic payments that would otherwise be made to the producer if there is a difference between that certification and the amount of increased commodity use as calculated under the formula.

(d) The submitted agreements filed during the sign-up period will require that the applicant set out the expected increase in production and other information as the agency may demand. Based on expected commodity prices, following the formula set out in this section, all such submissions will be assigned an expected value. Should the total expected value of all such agreements exceed the available funding, then a proration factor will be developed to factor the agreements down to the funding made available by CCC.

(e) Subject to the provisions of this section and conditions specified in the Agreement, a producer's payment eligibility shall be adjusted at the end of each quarter, and figured as follows:

(1) the extra production in energy from eligible inputs will be converted to gross payable bushels (or other applicable agricultural unit) by, unless otherwise determined by CCC:

(i) Allowing, as applicable, 1 bushel of corn for each increase of 2.5 gallons of ethanol;

(ii) Allowing, as applicable, 1 bushel of soybeans for each increase of 1.4 gallons of biodiesel production;

(iii) Such other method for other eligible agricultural commodities as CCC deems appropriate.

(2) The gross payable bushels, or other gross units, calculated under paragraph (e)(1) of this section shall then be converted to a net payable bushel (or other unit amount) by:

(i) For producers whose annual bioenergy production is less than 65 million gallons, allowing 1 net payable bushel for every 2.5 gross payable bushels of corn or soybeans, or by allowing a similar conversion in the event that there are other eligible agricultural commodities involved in the calculation;

(ii) For producers whose annual bioenergy production is equal to or more than 65 million gallons, allowing 1 net payable bushel for every 3.5 gross payable bushels of corn or soybeans, or by allowing a similar conversion in the event that there are other eligible commodities involved;

(3) The net payable bushel (or other unit) agricultural commodity amount calculated under paragraph (e)(2) of this section, shall be then converted to a gross payment by multiplying that commodity amount by the per unit value for the commodity determined as follows:

(i) For those agricultural commodities with established terminal market prices,

the CCC will use the applicable terminal market price for the last day of the program quarter announced daily by the KCCO, FSA, adjusted by the county average differential for the county in which the plant is located and the applicable quality factors determined by CCC. For this purpose the terminal market and differential used by CCC in determining different values for different locations will, to the extent practical, be the same as that used for producers under other major CCC commodity programs for determining marketing loan gains and other matters.

(ii) For those agricultural commodities that do not, as determined by CCC, have acceptable established terminal prices, the price shall be as determined by CCC based on such market data as appears to be appropriate for a fair evaluation.

(4) The gross payment calculated under paragraph (e)(3) of this section shall be reduced to a net payment by multiplying the gross payment figure by the proration factor determined under paragraph (d) of this section.

(5) Subject to other provisions of this section, producers shall be paid the net current payment, if positive, determined for the first quarter.

(6) After the first quarter, adjustments shall be made based on changes in production. New or renewed increases shall be paid using the formula set out above using current per unit values. Refunds, when due, shall be due at the per unit values at which they were paid unless CCC determines otherwise.

(7) If despite or in the absence of a proration under paragraph (d) of this section funds shall not be sufficient to cover payments due for any quarter then CCC shall prorate, or further prorate, the claims in such manner as CCC deems fit.

(8) No producer may receive more than five percent of the available funding for this program and determinations of payment eligibility shall take that limit into account.

§ 1424.9 Reports required.

Once an eligible producer has submitted an Agreement, Form CCC–850, that producer shall file information for each bioenergy producing facility quarterly through the end of the applicable FY as specified by CCC.

§ Sec. 1424.10 Succession and control of facilities and production.

A person who obtains a facility which is under contract under this part may request permission to succeed to the program contract and CCC may grant such request if it is determined that permitting such succession would serve the purposes of the program. As determined to be appropriate, CCC may require the consent of the original party to such succession and likewise CCC may terminate a contract and demand a full refund of payments made if a contracting party loses control of a facility whose increased production is the basis of a program payment or otherwise fails to retain the ability to assure that all program obligations and requirements will be met.

§ 1424.11 Maintenance and inspection of records.

For the purpose of verifying compliance with the requirements of this part, each eligible producer shall make available at one place at all reasonable times for examination by representatives of USDA, all books, papers, records, contracts, scale tickets, settlement sheets, invoices, written price quotations, or other documents related to the program that is within the control of such entity for not less than 3 years from the payment date.

§ 1424.12 Appeals.

(a) Any producer who is subject to an adverse determination made under this part shall have a right to appeal the determination by filing a written request with the Deputy Administrator at the following address: Deputy Administrator, Commodity Operations, Farm Service Agency, United States Department of Agriculture, STOP 0550, 1400 Independence Avenue, SW., Washington, DC 20250–0550.

(b) Any producer who believes that they have been adversely affected by a determination under this part must seek review with the Deputy Administrator within thirty days of such determination, unless provided with notice by FSA which provides a different time for appealing.

(c) Any producer who believes that they have been adversely affected by a determination by the Agency, must seek review with the Deputy Administrator before any other review may be requested within the Agency.

§ 1424.13 Misrepresentation and scheme or device.

(a) A producer shall be ineligible to receive payments under this program if CCC determines the producer:

(1) Adopted any scheme or device which tends to defeat the purpose of the program in this part;

(2) Made any fraudulent representation; or

(3) Misrepresented any fact affecting a program determination.

(b) Any funds disbursed pursuant to this part to a producer engaged in a misrepresentation, scheme, or device, or to any other person as a result of the bioenergy producer's actions, shall be refunded with interest together with such other sums as may become due, plus damages as may be determined by CCC.

(c) Interest charged under this part shall at the rate of interest which the United States Treasury charges CCC for funds, as of the date CCC made such funds available. Such interest shall accrue from the date such payments were made available to the date of repayment or the date interest increases as determined in accordance with applicable regulations.

(d) CCC may waive the accrual of interest and or damages if CCC determines that the cause of the erroneous determination was not due to any action of the bioenergy producer.

(e) Any producer or person engaged in an act prohibited by this section and any producer or person receiving payment under this part shall be jointly and severally liable for any refund due under this part and for related charges.

(f) The remedies provided in this part shall be in addition to other civil, criminal, or administrative remedies which may apply.

(g) Late payment interest shall be assessed on all refunds in accordance with the provisions of, and subject to the rates prescribed in, 7 CFR part 1403.

(h) Other limitations may apply.

Signed in Washington, DC, on November 7, 2000.

Parks Shackelford,

Executive Vice President, Commodity Credit Corporation.

[FR Doc. 00–28969 Filed 11–7–00; 4:08 pm]

BILLING CODE 3410–05–U

DEPARTMENT OF JUSTICE

Immigration and Naturalization Service

8 CFR Parts 103 and 214

[INS 1946–98]

RIN 1115–AF29

Delegation of the Adjudication of Certain Temporary Agricultural Worker (H–2A) Petitions, Appellate and Revocation Authority for Those Petitions to the Secretary of Labor

AGENCY: Immigration and Naturalization Service, Justice.

ACTION: Final rule; delay of effective date.

SUMMARY: The Immigration and Naturalization Service (Service) is delaying the effective date of a final rule

previously published in the **Federal Register** on July 13, 2000, at 65 FR 43528–43534 which delegated the adjudication of certain petitions for agricultural workers (H–2A) to the United States Department of Labor (DOL).

DATES: The effective date for the regulation published on July 13, 2000, at 65 FR 43528–43534 amending 8 CFR parts 103 and 214 is delayed from November 13, 2000, until October 1, 2001.

FOR FURTHER INFORMATION CONTACT: John W. Brown, Adjudications Officer, Benefits Division, Immigration and Naturalization Service, 425 I Street NW., Room 3214, Washington, DC 20536, telephone (202) 514–3228.

SUPPLEMENTARY INFORMATION: On July 13, 2000, the Service published a final rule in the **Federal Register** at 65 FR 43528–43534 delegating the authority to adjudicate certain H–2A petitions to the DOL. The final rule, which amended 8 CFR parts 103 and 214, was to take effect on November 13, 2000. The delay in the effective date of the final rule will afford the public as much opportunity as possible to become familiar with the new procedures in the issuance of temporary employment of nonimmigrant aliens in agriculture in the United States.

Dated: November 7, 2000.

Doris Meissner,

Commissioner, Immigration and Naturalization Service.

[FR Doc. 00–29008 Filed 11–9–00; 8:45 am]

BILLING CODE 4410–01–M

DEPARTMENT OF AGRICULTURE

Animal and Plant Health Inspection Service

9 CFR Part 93

[Docket No. 00–028–1]

Importation of Horses, Ruminants, Swine, and Dogs; Inspection and Treatment for Screwworm

AGENCY: Animal and Plant Health Inspection Service, USDA.

ACTION: Interim rule and request for comments.

SUMMARY: We are amending the animal import regulations to require horses, ruminants, and swine that are imported from regions of the world where screwworm is considered to exist to be inspected and treated, under certain conditions, for screwworm. We are also amending the regulations to require dogs that are imported from regions of the world where screwworm is considered to exist to be inspected and, if necessary, treated for screwworm. This action is necessary to prevent the introduction of screwworm into the United States.

DATES: This interim rule is effective November 13, 2000. We invite you to comment on this docket. We will consider all comments that we receive by January 12, 2001.

ADDRESSES: Please send your comment and three copies to: Docket No. 00–028–1, Regulatory Analysis and Development, PPD, APHIS, Suite 3C03, 4700 River Road, Unit 118, Riverdale, MD 20737–1238.

Please state that your comment refers to Docket No. 00–028–1.

You may read any comments that we receive on this docket in our reading room. The reading room is located in room 1141 of the USDA South Building, 14th Street and Independence Avenue, SW., Washington, DC. Normal reading room hours are 8 a.m. to 4:30 p.m., Monday through Friday, except holidays. To be sure someone is there to help you, please call (202) 690–2817 before coming.

APHIS documents published in the **Federal Register**, and related information, including the names of organizations and individuals who have commented on APHIS dockets, are available on the Internet at http://www.aphis.usda.gov/ppd/rad/webrepor.html.

FOR FURTHER INFORMATION CONTACT: Dr. Glen I. Garris, Supervisory Staff Officer, Regionalization Evaluation Services Staff, National Center for Import and Export, VS, APHIS, 4700 River Road Unit 39, Riverdale, MD 20737–1231; (301) 734–4356.

SUPPLEMENTARY INFORMATION:

Background

Screwworm is a pest native to tropical areas of South America, the Indian subcontinent, Southeast Asia, tropical and sub-Saharan Africa, and the Arabian peninsula that causes extensive damage to livestock and other warmblooded animals. The adult female screwworm typically lays her eggs in the open wounds of warmblooded host animals. Screwworm larvae hatch in as little as 12 hours and begin to feed on the raw flesh of the host animal; they are fully grown within 5 to 7 days after hatching. The fully grown larvae then drop from the host and tunnel into the soil, where they form protective cases to house themselves while they pupate. Adult screwworm flies emerge from these pupal cases and are ready to mate again within 3 to 5 days.

Screwworm was eradicated from the United States in 1966. However, in July of 1999, and again in February and March of 2000, screwworm larvae were found in horses that were imported into the United States from Venezuela and Argentina.

The regulations in 9 CFR part 93 (referred to below as the regulations) prohibit or restrict the importation of certain animals and birds into the United States to prevent the introduction of communicable diseases of livestock and poultry. Subparts C, D, E, and F of the regulations govern the importation of horses, ruminants, swine, and dogs, respectively.

We are amending the animal import regulations to require horses, ruminants, and swine that are imported from regions of the world where screwworm is considered to exist to be inspected and treated, under certain conditions, for screwworm. We are also amending the regulations to require dogs that are imported from regions of the world where screwworm is considered to exist to be inspected and, if necessary, treated for screwworm. We are taking this action in order to prevent the introduction of screwworm into the United States.

Screwworm is considered to exist in the following regions of the world: Angola, Argentina, Bahrain, Bangladesh, Benin, Bolivia, Botswana, Brazil, Brunei, Burkina Faso, Burundi, Cambodia, Cameroon, Central African Republic, China, Columbia, Congo, Dominican Republic, Ecuador, Equatorial Guinea, French Guiana, Gabon, Gambia, Ghana, Guinea, Guinea-Bissau, Guyana, Haiti, India, Indonesia, Iraq, Ivory Coast, Jamaica, Kenya, Kuwait, Laos, Lesotho, Liberia, Macau, Malawi, Malaysia, Mali, Mauritania, Mozambique, Myanmar, Namibia, Nigeria, Oman, Pacific Islands (Palau), Panama, Papua New Guinea, Paracel Islands, Paraguay, Peru, Philippines, Qatar, Rwanda, Saudi Arabia, Senegal, Sierra Leone, Singapore, South Africa, Spratly Islands, Sri Lanka, Surinam, Swaziland, Taiwan, Tanzania, Thailand, Togo, Trinidad and Tobago, Uganda, United Arab Emirates, Uruguay, Venezuela, Vietnam, Zaire, Zambia, and Zimbabwe. Screwworm is also considered to exist on Isla de Pascua (Easter Island), which is part of Chile.

As of the effective date of this rule, horses, ruminants, swine, and dogs may be imported into the United States from the regions where screwworm is considered to exist only if they are inspected and, if necessary, treated for

screwworm according to the conditions outlined below for each type of animal.

Requirements for Horses

Prior to the effective date of this rule, the regulations did not contain any restrictions on the importation of horses that were specifically designed to protect against the introduction of screwworm into the United States. In this document, we are amending subpart C of the regulations to add the following requirements for imported horses from any region of the world where screwworm is considered to exist.

• A veterinarian must treat horses with ivermectin 3 to 5 days prior to the date of export to the United States. The horses must be treated according to the appropriate recommended dose prescribed on the product's label.

Research has shown that ivermectin is effective against the early stages of screwworm infestation that are difficult to observe during visual inspection of animals. The treatment must be administered within 3 to 5 days prior to export because ivermectin has been demonstrated to eliminate infestations of screwworm within 3 to 5 days after treatment. Treating horses with ivermectin 3 to 5 days prior to export reduces the risk of animals becoming infested with screwworm just prior to export.

• Horses must be examined for screwworm by a full-time salaried veterinary official of the exporting country within 24 hours prior to shipment to the United States. The official must fully examine the animals, paying particular attention to their external genitalia. If any animals are found to be infested with screwworm, they must be held in quarantine and treated until free from infestation.

This examination is necessary to identify outwardly visible signs of screwworm infestation. We are directing that officials pay particular attention to the external genitalia of horses because in both recent cases where screwworm infestations were found in imported horses, the infestations were located in the prepuce area of the penis of the horses. The Animal and Plant Health Inspection Service (APHIS) has gathered information from other countries confirming that screwworm infestations in horses are commonly found in the prepuce.

• At the time the horses are loaded onto a means of conveyance for export, a veterinarian must treat any visible wounds on the animals with a solution of coumaphos dust at a concentration of 5 percent active ingredient.

Treatment with coumaphos will help ensure that potential screwworm infestations in open wounds are eliminated prior to shipment to the United States. Coumaphos dust is an insecticide that is effective against screwworm and is the insecticide most commonly used in the International Screwworm Eradication Program, an APHIS program to prevent the introduction of screwworm into the United States by eradicating screwworm from Mexico and Central America.

• The horses must be accompanied to the United States by a certificate signed by a full-time salaried veterinary official of the exporting country. The certificate must state that the horses, including their external genitalia, have been thoroughly examined, that the animals have been treated with ivermectin, that any visible wounds on the animals have been treated with coumaphos, and that the animals appear to be free of screwworm.

This certification will help ensure that all preembarkation requirements have been met.

Horses imported from regions identified in this document as regions where screwworm is considered to exist are already required to be quarantined upon arrival in the United States for at least 3 days at an APHIS animal import center. Under this rule, horses from regions where screwworm is considered to exist must be quarantined, inspected, and, if necessary, treated upon arrival in the United States as follows:

• The horses must be quarantined upon arrival in the United States at an APHIS animal import center for at least 7 days.

• A veterinarian must examine the horses, including their external genitalia, for screwworm within 24 hours after their arrival at the APHIS animal import center in the United States.

If a horse arrives infested with screwworm despite preembarkation precautions, we must be sure the infestation is promptly detected. If screwworm infestations are promptly discovered and treated during quarantine, maturation of larvae can be prevented, thus reducing the possibility that larvae could drop into the soil and pupate. The cost of this inspection is covered by the user fees applicable to equines quarantined in APHIS animal import centers (see 9 CFR part 130, § 130.2).

• On day 7, prior to the horses' release, a veterinarian must examine the horses for screwworm at the expense of the owner or broker.[1] For this examination, the veterinarian must anesthetize the horses so that he or she can thoroughly examine the horses' external genitalia. If screwworms are found during this examination, the horses must be held in quarantine and treated until free.

A 7-day quarantine will provide time for any previously undetected screwworm that may be present to grow large enough to be found. Examination on the seventh day will ensure that any screwworm infestations are detected and eliminated before the animal is allowed to leave quarantine.

Requirements for Ruminants and Swine

Prior to the effective date of this rule, the regulations did not contain any restrictions on the importation of ruminants and swine that were specifically designed to protect against the introduction of screwworm into the United States. In this document, we are amending subparts D and E of the regulations to add the following requirements for imported ruminants and swine from any region of the world where screwworm is considered to exist.

• A veterinarian must treat ruminants and swine with ivermectin 3 to 5 days prior to the date of export to the United States. The ruminants and swine must be treated according to the appropriate recommended dose prescribed on the product's label.

Research has shown that ivermectin is effective against the early stages of screwworm infestation that are difficult to observe during visual inspection of animals. The treatment must be administered within 3 to 5 days prior to export because ivermectin has been demonstrated to eliminate infestations of screwworm within 3 to 5 days after treatment. Treating ruminants and swine with ivermectin 3 to 5 days prior to export reduces the risk of animals becoming infested with screwworm just prior to export.

• Ruminants and swine must be examined for screwworm by a full-time salaried veterinary official of the exporting country within 24 hours prior to shipment to the United States. The official must fully examine the animals. If any animals are found to be infested with screwworm, they must be held in quarantine and treated until free from infestation.

[1] The daily costs of APHIS animal quarantine services are provided in § 130.2(a). The cost of paying for this final examination of an anesthetized horse is not included in the daily user fees, and importers are responsible for the cost of this examination, in addition to daily quarantine user fees.

This examination is necessary to identify outwardly visible signs of screwworm infestation.

• At the time the ruminants or swine are loaded onto a means of conveyance for export, a veterinarian must treat any visible wounds on the animals with a solution of coumaphos dust at a concentration of 5 percent active ingredient.

Treatment with coumaphos will help ensure that potential screwworm infestations in open wounds are eliminated prior to shipment to the United States. Coumaphos dust is an insecticide that is effective against screwworm and is the insecticide most commonly used in the International Screwworm Eradication Program, an APHIS program to prevent the introduction of screwworm into the United States by eradicating screwworm from Mexico and Central America.

• The ruminants and swine must be accompanied to the United States by a certificate signed by a full-time salaried veterinary official of the exporting country. The certificate must state that the ruminants or swine have been thoroughly examined, that the animals have been treated with ivermectin, that any visible wounds on the animals have been treated with coumaphos, and that the animals appear to be free of screwworm.

This certification will help ensure that all preembarkation requirements have been met.

Ruminants and swine that are imported from all countries and areas identified in this rule as regions where screwworm is considered to exist are already required under §§ 93.411 and 93.510 of the regulations to be quarantined for 30 and 15 days, respectively, during which time they are observed for signs of disease or infestation with animal pests. If screwworm is found during quarantine, the infested animal is held in quarantine and treated until free of infestation.

We believe the requirements described above, in combination with existing quarantine requirements, will prevent the introduction of screwworm into the United States by imported horses, ruminants, or swine.

Dogs

Dogs to be used in the handling of livestock may be imported into the United States in accordance with the regulations at subpart F. The regulations provide that dogs from any part of the world except Canada, Mexico, and regions of Central America and the West Indies that are imported to be used in the handling of livestock must be quarantined and inspected at the port of entry in the United States for a sufficient time to determine if the dogs are infested with *Taenia coenurus* (tapeworm). If dogs are found to be infested with tapeworm, they are required to be treated until free from the infestation.

Prior to the effective date of this rule, APHIS did not regulate the importation of dogs other than those used to handle livestock because we did not believe such imported dogs presented a significant risk of disseminating pests or diseases to livestock. However, since screwworms are strong fliers and can move considerable distances from their original point of infestation, we believe it is necessary to require all dogs intended for importation into the United States to be inspected for screwworm by a veterinarian and, if infested, to be held in quarantine and treated until free.

We are, therefore, amending subpart F to provide that all dogs from any region of the world where screwworm is considered to exist may be imported into the United States only if accompanied by a certificate signed by a full-time salaried veterinary official of the exporting region that states that the dog(s) have been inspected for screwworm within 5 days preceding shipment to the United States and that the dog(s) were either found free of screwworm, or were found to be infested with screwworm and were held in quarantine and treated until free prior to leaving the region of export. We believe these requirements are necessary to prevent screwworm from being introduced into the United States. We are also making several editorial changes to the requirements for dogs used for handling livestock to make the requirements clearer.

Emergency Action

The Administrator of the Animal and Plant Health Inspection Service has determined that an emergency exists that warrants publication of this interim rule without prior opportunity for public comment. Immediate action is necessary to prevent the introduction of screwworm into the United States.

Because prior notice and other public procedures with respect to this action are impracticable and contrary to the public interest under these conditions, we find good cause under 5 U.S.C. 553 to make this action effective less than 30 days after publication. We will consider comments that are received within 60 days of publication of this rule in the **Federal Register**. After the comment period closes, we will publish another document in the **Federal Register**. The document will include a discussion of any comments we receive and any amendments we are making to the rule as a result of the comments.

Executive Order 12866 and Regulatory Flexibility Act

This rule has been reviewed under Executive Order 12866. The rule has been determined to be not significant for the purposes of Executive Order 12866 and, therefore, has not been reviewed by the Office of Management and Budget.

Prior to the effective date of this rule, APHIS regulations contained no provisions specifically designed to protect against the introduction of screwworm by animals imported into the United States. In July 1999, and again in February and March 2000, screwworm larvae were found in horses imported into the United States. This interim rule sets forth preembarkation requirements for ruminants, swine, and dogs and preembarkation and postarrival requirements for horses imported from any region of the world where screwworm is considered to exist in order to prevent the introduction of screwworm into the United States.

The screwworm is a parasite that enters open wounds and feeds on the flesh of livestock and other warmblooded animals, including humans. Left untreated, screwworm-infested wounds lead to death. Multiple infestations can kill a grown steer in 5 to 7 days.

As early as 1825, western States reported serious screwworm problems, and infestations spread to the southeastern United States by the 1930's. The U.S. Department of Agriculture began an eradication program in the 1950's using sterilized flies, and self-sustaining screwworm populations were eliminated from the United States by 1966. International eradication efforts have proceeded southward during the 1990's, with Mexico officially declared free of screwworm in 1991, and the countries of Belize, Costa Rica, El Salvador, Guatemala, Honduras, and Nicaragua thereafter.

Regions where screwworm is considered to exist include Angola, Argentina, Bahrain, Bangladesh, Benin, Bolivia, Botswana, Brazil, Brunei, Burkina Faso, Burundi, Cambodia, Cameroon, Central African Republic, China, Colombia, Congo, Dominican Republic, Ecuador, Equatorial Guinea, French Guiana, Gabon, Gambia, Ghana, Guinea, Guinea-Bissau, Guyana, Haiti, India, Indonesia, Iraq, Ivory Coast, Jamaica, Kenya, Kuwait, Laos, Lesotho, Liberia, Macau, Malawi, Malaysia, Mali, Mauritania, Mozambique, Myanmar, Namibia, Nigeria, Oman, Pacific Islands (Palau), Panama, Papua New Guinea,

Paracel Islands, Paraguay, Peru, Philippines, Qatar, Rwanda, Saudi Arabia, Senegal, Sierra Leone, Singapore, South Africa, Spratly Islands, Sri Lanka, Surinam, Swaziland, Taiwan, Tanzania, Thailand, Togo, Trinidad and Tobago, Uganda, United Arab Emirates, Uruguay, Venezuela, Vietnam, Zaire, Zambia, and Zimbabwe. Screwworm is also considered to exist on Easter Island, which is part of Chile. However, given that few, if any, animals are imported by the United States from Easter Island, Chile is not included in this analysis.

Inspection and testing protocols for the importation of horses, ruminants, swine, and dogs from regions where screwworm is considered to exist were described earlier in this document. Where possible, costs associated with the protocols are approximated, to evaluate whether proposed regulations are likely to have a significant economic effect on a substantial number of small entities. This likelihood is examined for each type of animal, based on inspection, treatment, and certification costs, and recognizing that some measures are already required because of other disease risks. Estimates of the additional costs per animal to importers that could result from implementation of this rule are then placed in perspective by comparing the magnitude of the additional costs to the average value of the animals being imported, and by noting the proportion of U.S. imports of these animals that come from the infested countries.

Horses

As explained earlier in this document, this interim rule requires horses that are imported from regions of the world where screwworm is considered to exist to meet the following conditions:

- A veterinarian must treat horses with ivermectin 3 to 5 days prior to the date of export to the United States;
- Horses must be examined for screwworm and found free by a full-time salaried veterinary official of the exporting country within 24 hours prior to shipment to the United States;
- At the time of loading onto a means of conveyance for export, a veterinarian must treat any visible wounds on horses with a solution of coumaphos dust at a concentration of 5 percent active ingredient;
- Horses must be accompanied to the United States by a certificate signed by a full-time, salaried veterinary official of the exporting country. The certificate must state that the animals, including their external genitalia, have been thoroughly examined and found free of screwworm, and that the animals have been treated with ivermectin, and, if necessary, coumaphos dust;
- Horses must be quarantined upon arrival in the United States at an APHIS animal import center for at least 7 days.
- A veterinarian must examine the horses, including their external genitalia, for screwworm within 24 hours after their arrival at the APHIS animal import center; and
- On day 7, prior to the horses' release, a veterinarian must examine the horses for screwworm at the expense of the owner or broker. For this examination, horses must be anesthetized so that their external genitalia can be thoroughly examined.

Most countries in the Western hemisphere that are infested with screwworm are also affected by Venezuelan equine encephalomyelitis (VEE), and several countries in the Eastern Hemisphere that are infested with screwworm are also affected by African horse sickness (AHS). Under § 93.308(a)(1) and (2), horses imported from VEE- or AHS-affected regions are subject to 7- and 60-day quarantines, respectively, upon arrival in the United States. The 7-day screwworm quarantine will be concurrent with required quarantines for VEE and AHS. Importers of horses from screwworm infested and VEE- or AHS-affected areas will bear only the additional costs associated with preembarkation treatment and inspection, treatment of wounds during loading, inspection upon arrival at the port of entry, and the final examination of anesthetized horses.

Preembarkation inspection and treatment costs will vary from region to region. The requirement that the examination will need to be performed by a full-time salaried veterinary official of the exporting country would suggest that some regions may set fees. We do not have information on these costs, but for the purposes of a generalized analysis, we assumed that pre-embarkation inspections, treatments, and certification would total between $50 and $100 per animal. We assumed that examination upon arrival in the United States and the final inspection of the anesthetized horse at the end of the quarantine period would cost between $75 and $125 per horse, for a total cost ranging from $125 to $225 per horse.

Regions with screwworm that are not affected by VEE or AHS are Argentina, Bangladesh, Brunei, Cambodia, China, India, Indonesia, Iraq, Laos, Macau, Malaysia, Myanmar, Pacific Islands (Palau), Papua New Guinea, Paracel Islands, Philippines, Qatar, Singapore, Spratly Islands, Sri Lanka, Taiwan, Thailand, United Arab Emirates, and Vietnam. Horses imported from these regions are already subject to a minimum quarantine of 3 days upon arrival in the United States. Importers of horses from these regions will bear preembarkation inspection and treatment costs as discussed above, as well as the cost of 4 additional days of quarantine.

Argentina is the only significant source of horse imports for which the additional quarantine days will be applicable. China, Philippines, Taiwan, and United Arab Emirates also exported horses to the United States during the period 1995–1998, but collectively they exported only 5 horses in 1995, 9 in 1996, 14 in 1997, and 13 in 1998.

The cost of quarantining a horse for 3 days is $448.50. The cost of a 7-day quarantine is $881.50. Thus, importers of horses from Argentina (and countries such as China, Philippines, Qatar, Taiwan, and United Arab Emirates) will bear an additional quarantine cost of $433 per horse. Given that importers will also bear preembarkation and postarrival costs of $125 to $225 per horse, the total additional cost to importers will likely be $558 to $658 per horse. Importers may also encounter other costs less easily quantified, such as greater difficulty in the scheduling of shipments (space is easier to reserve for a 3-day quarantine than for a 7-day quarantine) given the demand for use of the animal import center.

These costs are small when compared to the value of the horses imported. For example, the average value of purebred horses imported between 1995 and 1998 from screwworm infested regions in the Western Hemisphere, except Argentina, was $6,370. The assumed additional costs ($125 to $225) to importers of purebred horses from these countries represent 2 to 3.5 percent of the average value of imported horses. During this same period, the average value of purebred horses imported from Argentina was $9,280. The assumed costs ($558 to $658) to importers of purebred horses from Argentina represent 6 to 7 percent of the average value of the horses.

The potential effect of these costs on U.S. entities can also be assessed by taking into account the share of U.S. horse imports supplied by the screwworm infested regions. In 1995–1998, the infested regions, excluding Argentina, supplied about 12 percent of all purebred horses imported by the United States (an average of 196 horses per year); about 21 percent (an average

of 347 horses per year) of purebred imports came from Argentina.[2]

Importers that may be affected by this rule include U.S. horse farms and operators of racing stables. Whether potentially affected operations are considered small entities depends on their annual gross receipts. Horse farms, classified under Standard Industrial Classification (SIC) industry number 0272 (Horses and Other Equines), are considered small if their annual gross receipts are $0.5 million or less. Operators of racing stables are included within SIC industry number 7948 (Racing, Including Track Operations), for which the small-entity criterion is annual gross receipts of $5 million or less.

It is reasonable to assume that at least some of the horse farms and other firms that will be affected by this rule change are small entities, although their number is not known. However, since estimated screwworm-prevention costs are a small fraction of the average value of the horses imported, and since two-thirds of purebred horse imports do not come from screwworm-affected regions, we do not expect the economic effects of this rule to be significant.

Ruminants and Swine

Protocol requirements for ruminants and swine are the same as for horses, other than for the 7-day quarantine and final examination of the anesthetized animal. Ruminants and swine are generally not imported from screwworm infested countries, for both economic and animal health reasons. The occurrence of diseases such as foot-and-mouth disease and hog cholera essentially preclude ruminant and swine imports from most screwworm-affected regions. Of the screwworm infested regions that are considered free of foot-and-mouth disease (Haiti, Jamaica, Panama, South Africa,[3] and Trinidad and Tobago), only South Africa has a history of ruminant exports to the United States.[4]

No cattle or sheep were exported from South Africa to the United States in the past 5 years, but 412 goats were exported to the United States in 1995. If such shipments were to recur, the additional costs borne by the goat importers would be those associated with preembarkation inspection, treatment, and certification, and treatment of wounds during loading. The value of goats imported from South Africa in 1995 was about $660 each. Assumed preembarkation inspection, treatment, and certification costs of about $30 per goat represent less than 5 percent of this average value.

Potentially affected entities would include U.S. goat producers, the majority of which are small entities (as classified under SIC industry number 0214, and for which the small-entity criterion is annual gross receipts of $0.5 million or less). We expect that any future goat imports from South Africa would represent a small fraction of the total U.S. imports of goats. As with horses, we do not expect that this rule will have a significant economic effect on a substantial number of small entities.

Dogs

Prior to the effective date of this rule, we regulated the importation of dogs only if they were intended to be used in the handling of livestock. The screwworm threat requires that all dogs imported from the infested countries be inspected and, if necessary, treated before importation. A certificate signed by a full-time salaried veterinary official of the dog's region of origin must state that the dog has been inspected for screwworm within 5 days prior to shipment to the United States and that it is either free from infestation, or was found to be infested with screwworm and treated until free prior to leaving the region of origin.

The cost to dog importers for preembarkation inspection, treatment (if necessary), and certification is not known. It may be similar to that assumed for horses: $50 to $100 per animal.

The quantity of dogs imported yearly from the affected regions is not known, but we believe the number is small. Many of these dogs are probably owned as pets; for their owners, any economic effects of this rule are not within the scope of the Regulatory Flexibility Act. Firms importing dogs from these regions for sale, whether to be used in handling livestock or otherwise, are classified under SIC industry number 5199 (Miscellaneous Nondurable Goods), for which the small-entity criterion is 100 employees or fewer.

Firms that import dogs from the infested regions may well be small entities. However, it is unlikely that the preembarkation screwworm requirements would represent significant costs when compared to the value of an imported dog; transport expenses alone would imply that the market value of such a dog would be relatively high.

Summary

This rule sets forth preembarkation and postarrival requirements for horses, ruminants, swine, and dogs imported from screwworm infested regions. Protocols for testing and treatment will reduce the risk that screwworm could be introduced into the United States. As a group, screwworm infested regions are not a major source of U.S. horse imports, and, with apparently only one exception in the past 5 years, not a source at all of ruminants or swine. Also, few if any dogs are presumed to be imported from these regions. In those instances in which imports do take place, we do not expect costs associated with the protocols to be large when compared to the value of the animals. Small entities may be affected, but their number will not be substantial nor will the economic effects be significant.

Under these circumstances, the Administrator of the Animal and Plant Health Inspection Service has determined that this action will not have a significant economic impact on a substantial number of small entities.

Executive Order 12988

This rule has been reviewed under Executive Order 12988, Civil Justice Reform. This rule: (1) Preempts all State and local laws and regulations that are inconsistent with this rule; (2) has no retroactive effect; and (3) does not require administrative proceedings before parties may file suit in court challenging this rule.

Paperwork Reduction Act

In accordance with section 3507(j) of the Paperwork Reduction Act of 1995 (44 U.S.C. 3501 *et seq.*), the information

[2] For nonpurebred horses, the screwworm-affected countries supply a much smaller share of U.S. imports. During 1995–1998, only 0.21 percent of nonpurebred horse imports (an average of 73 horses per year) were supplied by the affected countries, excluding Argentina; only 0.36 percent of of nonpurebred horse imports (an average of 125 horses per year) came from Argentina. We excluded from this analysis nonpurebred horse imports from the affected countries since they represent such a small fraction—about one-half of one percent—of all such imports by the United States.

[3] South Africa is considered free of foot-and-mouth disease except the foot-and-mouth disease controlled area (which extends from the Republic of South Africa's border with Mozambique approximately 30 to 90 kilometers into the Republic of South Africa to incude Kruger National Park and surveillance and control zones around the park, and elsewhere extends, from east to west, approximately 10 to 20 kilometers into the Republic of South Africa along its borders with Mozambique, Swaziland, Zimbabwe, Botswana, and the southeast part of the border with Namibia).

[4] Canada is the main supplier of cattle to the United States, and Mexico is second. Together, they provide 99 percent of U.S. cattle imports; very small quantities are imported from other countries, such as Japan and Germany. Nearly all imported sheep are from Canada, with small percentages coming from Mexico, New Zealand, and Australia. Canada and New Zealand are the major suppliers of goats, with occasional shipments from Mexico and Australia. Nearly all imported swine come from Canada, with lesser numbers supplied by Europe, New Zealand and Australia.

collection and recordkeeping requirements included in this interim rule have been submitted for emergency approval to the Office of Management and Budget (OMB). OMB has assigned control number 0579–0165 to the information collection and recordkeeping requirements.

We plan to request continuation of that approval for 3 years. Please send written comments on the 3-year approval request to the following addresses: (1) Docket No. 00–028–1, Regulatory Analysis and Development, PPD, APHIS, suite 3C03, 4700 River Road Unit 118, Riverdale, MD 20737–1238, and (2) Clearance Officer, OCIO, USDA, room 404–W, 14th Street and Independence Avenue, SW., Washington, DC 20250. Please state that your comments refer to Docket No. 00–028–1 and send your comments within 60 days of publication of this rule.

This interim rule will amend the animal import regulations to require horses, ruminants, and swine that are imported from regions of the world where screwworm is considered to exist to be inspected and treated, under certain conditions, for screwworm. This rule will also amend the regulations to require dogs that are imported from regions of the world where screwworm is considered to exist to be inspected and, if necessary, treated for screwworm.

Implementing this rule will necessitate the completion of a foreign animal health certificate for horses, ruminants, swine, and dogs that are imported from regions where screwworm is considered to exist.

We are soliciting comments from the public concerning our information collection and recordkeeping requirements. These comments will help us:

(1) Evaluate whether the information collection is necessary for the proper performance of our agency's functions, including whether the information will have practical utility;

(2) Evaluate the accuracy of our estimate of the burden of the information collection, including the validity of the methodology and assumptions used;

(3) Enhance the quality, utility, and clarity of the information to be collected; and

(4) Minimize the burden of the information collection on those who are to respond (such as through the use of appropriate automated, electronic, mechanical, or other technological collection techniques or other forms of information technology; e.g., permitting electronic submission of responses).

Estimate of burden: Public reporting burden for this collection of information is estimated to average 15 minutes per response.

Respondents: Full-time salaried veterinary officials of exporting regions.

Estimated annual number of respondents: 36.

Estimated annual number of responses per respondent: 3.78.

Estimated annual number of responses: 136.

Estimated total annual burden on respondents: 34 hours.

Copies of this information collection can be obtained from: Ms. Laura Cahall, APHIS' Information Collection Coordinator, (301) 734–5360.

List of Subjects in 9 CFR Part 93

Animal diseases, Imports, Livestock, Poultry and poultry products, Quarantine, Reporting and recordkeeping requirements.

Accordingly, we are amending 9 CFR part 93 as follows:

PART 93—IMPORTATION OF CERTAIN ANIMALS, BIRDS, AND POULTRY, AND CERTAIN ANIMAL, BIRD, AND POULTRY PRODUCTS; REQUIREMENTS FOR MEANS OF CONVEYANCE AND SHIPPING CONTAINERS

1. The authority citation for part 93 is revised to read as follows:

Authority: 7 U.S.C. 1622; 19 U.S.C. 1306; 21 U.S.C. 102–105, 111, 114a, 134a, 134b, 134c, 134d, 134f, 136, and 136a; 31 U.S.C. 9701; 7 CFR 2.22, 2.80, and 371.4.

2. In § 93.301, a new paragraph (j) is added to read as follows:

§ 93.301 General prohibitions; exceptions.

* * * * *

(j) *Examination and treatment for screwworm.* Horses from Angola, Argentina, Bahrain, Bangladesh, Benin, Bolivia, Botswana, Brazil, Brunei, Burkina Faso, Burundi, Cambodia, Cameroon, Central African Republic, China, Columbia, Congo, Dominican Republic, Ecuador, Equatorial Guinea, French Guiana, Gabon, Gambia, Ghana, Guinea, Guinea-Bissau, Guyana, Haiti, India, Indonesia, Iraq, Isla de Pascua (Easter Island, part of Chile), Ivory Coast, Jamaica, Kenya, Kuwait, Laos, Lesotho, Liberia, Macau, Malawi, Malaysia, Mali, Mauritania, Mozambique, Myanmar, Namibia, Nigeria, Oman, Pacific Islands (Palau), Panama, Papua New Guinea, Paracel Islands, Paraguay, Peru, Philippines, Qatar, Rwanda, Saudi Arabia, Senegal, Sierra Leone, Singapore, South Africa, Spratly Islands, Sri Lanka, Surinam, Swaziland, Taiwan, Tanzania, Thailand, Togo, Trinidad and Tobago, Uganda, United Arab Emirates, Uruguay, Venezuela, Vietnam, Zaire, Zambia, Zimbabwe, or any other region of the world where screwworm is considered to exist may be imported into the United States only if they meet the following requirements and all other applicable requirements of this part:

(1) A veterinarian must treat horses with ivermectin 3 to 5 days prior to the date of export to the United States according to the recommended dose prescribed on the product's label.

(2) Horses must be examined for screwworm by a full-time salaried veterinary official of the exporting country within 24 hours prior to shipment to the United States. The official must fully examine the horses, including their external genitalia. If horses are found to be infested with screwworm, they must be treated until free from infestation.

(3) At the time horses are loaded onto a means of conveyance for export, a veterinarian must treat any visible wounds on the animals with a solution of coumaphos dust at a concentration of 5 percent active ingredient.

(4) Horses must be accompanied to the United States by a certificate signed by a full-time salaried veterinary official of the exporting country. The certificate must state that the horses, including their external genitalia, have been thoroughly examined and found free of screwworm and that the horses have been treated in accordance with paragraphs (j)(1) and (j)(3) of this section.

(5) Horses must be quarantined upon arrival in the United States at an APHIS animal import center for at least 7 days.

(6) Horses must be examined for screwworm by a veterinarian within 24 hours after arrival at an APHIS animal import center in the United States. The examining veterinarian must examine horses, including their external genitalia, to determine whether the horse is infested with screwworm.

(7) Horses must be held at the animal import center for a minimum of 7 days. On day 7, prior to the horses' release, the horses must be examined for screwworm by a veterinarian at the expense of the owner or broker. For this examination, the horses must be anesthetized so that the external genitalia of the horses can be thoroughly examined. If screwworm are found during this examination, the horses must be held in quarantine and treated until free of infestation.

* * * * *

3. Section 93.405 is amended as follows.

a. In paragraph (a)(1), by removing the word ''and'' at the end of the paragraph.

b. By revising paragraph (a)(2).

c. By adding a new paragraph (a)(3).

§ 93.405 Certificates for ruminants.

(a) * * *

(2) That the ruminants are not in quarantine in the region of origin; and

(3) If the ruminants are from Angola, Argentina, Bahrain, Bangladesh, Benin, Bolivia, Botswana, Brazil, Brunei, Burkina Faso, Burundi, Cambodia, Cameroon, Central African Republic, China, Columbia, Congo, Dominican Republic, Ecuador, Equatorial Guinea, French Guiana, Gabon, Gambia, Ghana, Guinea, Guinea-Bissau, Guyana, Haiti, India, Indonesia, Iraq, Isla de Pascua (Easter Island, part of Chile), Ivory Coast, Jamaica, Kenya, Kuwait, Laos, Lesotho, Liberia, Macau, Malawi, Malaysia, Mali, Mauritania, Mozambique, Myanmar, Namibia, Nigeria, Oman, Pacific Islands (Palau), Panama, Papua New Guinea, Paracel Islands, Paraguay, Peru, Philippines, Qatar, Rwanda, Saudi Arabia, Senegal, Sierra Leone, Singapore, South Africa, Spratly Islands, Sri Lanka, Surinam, Swaziland, Taiwan, Tanzania, Thailand, Togo, Trinidad and Tobago, Uganda, United Arab Emirates, Uruguay, Venezuela, Vietnam, Zaire, Zambia, Zimbabwe, or any other region of the world where screwworm is considered to exist, the ruminants may be imported into the United States only if they meet the following requirements and all other applicable requirements of this part:

(i) A veterinarian must treat the ruminants with ivermectin 3 to 5 days prior to the date of export to the United States according to the recommended dose prescribed on the product's label.

(ii) The ruminants must be fully examined for screwworm by a full-time salaried veterinary official of the exporting country within 24 hours prior to shipment to the United States. If ruminants are found to be infested with screwworm, they must be treated until free from infestation.

(iii) At the time ruminants are loaded onto a means of conveyance for export, a veterinarian must treat any visible wounds on the animals with a solution of coumaphos dust at a concentration of 5 percent active ingredient.

(iv) The ruminants must be accompanied to the United States by a certificate signed by a full-time salaried veterinary official of the exporting country. The certificate must state that the ruminants have been thoroughly examined and found free of screwworm and that the ruminants have been treated in accordance with paragraphs (a)(3)(i) and (a)(3)(iii) of this section.

* * * * *

4. Section 93.505 is amended by redesignating paragraph (b) as paragraph (c) and by adding a new paragraph (b) to read as follows.

§ 93.505 Certificate for swine.

* * * * *

(b) Swine from Angola, Argentina, Bahrain, Bangladesh, Benin, Bolivia, Botswana, Brazil, Brunei, Burkina Faso, Burundi, Cambodia, Cameroon, Central African Republic, China, Columbia, Congo, Dominican Republic, Ecuador, Equatorial Guinea, French Guiana, Gabon, Gambia, Ghana, Guinea, Guinea-Bissau, Guyana, Haiti, India, Indonesia, Iraq, Isla de Pascua (Easter Island, part of Chile), Ivory Coast, Jamaica, Kenya, Kuwait, Laos, Lesotho, Liberia, Macau, Malawi, Malaysia, Mali, Mauritania, Mozambique, Myanmar, Namibia, Nigeria, Oman, Pacific Islands (Palau), Panama, Papua New Guinea, Paracel Islands, Paraguay, Peru, Philippines, Qatar, Rwanda, Saudi Arabia, Senegal, Sierra Leone, Singapore, South Africa, Spratly Islands, Sri Lanka, Surinam, Swaziland, Taiwan, Tanzania, Thailand, Togo, Trinidad and Tobago, Uganda, United Arab Emirates, Uruguay, Venezuela, Vietnam, Zaire, Zambia, Zimbabwe, or any other region of the world where screwworm is considered to exist may only be imported into the United States if they meet the following requirements and all other applicable requirements of this part:

(1) A veterinarian must treat the swine with ivermectin 3 to 5 days prior to the date of export to the United States according to the recommended dose prescribed on the product's label.

(2) The swine must be fully examined for screwworm by a full-time salaried veterinary official of the exporting country within 24 hours prior to shipment to the United States. If swine are found to be infested with screwworm, they must be treated until free from infestation.

(3) At the time swine are loaded onto a means of conveyance for export, a veterinarian must treat any visible wounds on the animals with a solution of coumaphos dust at a concentration of 5 percent active ingredient.

(4) The swine must be accompanied to the United States by a certificate signed by a full-time salaried veterinary official of the exporting country. The certificate must state that the swine have been thoroughly examined and found free of screwworm and that the swine have been treated in accordance with paragraphs (b)(1) and (b)(3) of this section.

* * * * *

5. Section 93.600 is revised to read as follows:

§ 93.600 Importation of dogs.

(a) *All dogs.* Dogs from Angola, Argentina, Bahrain, Bangladesh, Benin, Bolivia, Botswana, Brazil, Brunei, Burkina Faso, Burundi, Cambodia, Cameroon, Central African Republic, China, Columbia, Congo, Dominican Republic, Ecuador, Equatorial Guinea, French Guiana, Gabon, Gambia, Ghana, Guinea, Guinea-Bissau, Guyana, Haiti, India, Indonesia, Iraq, Isla de Pascua (Easter Island, part of Chile), Ivory Coast, Jamaica, Kenya, Kuwait, Laos, Lesotho, Liberia, Macau, Malawi, Malaysia, Mali, Mauritania, Mozambique, Myanmar, Namibia, Nigeria, Oman, Pacific Islands (Palau), Panama, Papua New Guinea, Paracel Islands, Paraguay, Peru, Philippines, Qatar, Rwanda, Saudi Arabia, Senegal, Sierra Leone, Singapore, South Africa, Spratly Islands, Sri Lanka, Surinam, Swaziland, Taiwan, Tanzania, Thailand, Togo, Trinidad and Tobago, Uganda, United Arab Emirates, Uruguay, Venezuela, Vietnam, Zaire, Zambia, Zimbabwe, or any other region of the world where screwworm is considered to exist may only be imported into the United States if they meet the following requirements and all other applicable requirements of this part:

(1) Dogs must be accompanied by a certificate signed by a full-time salaried veterinary official of the region of origin stating that the dog has been inspected for screwworm within 5 days preceding its shipment to the United States.

(2) The certificate must state that the dog is either free from screwworm or was found to be infested with screwworm and was held in quarantine and treated until free from screwworm prior to leaving the region of origin.

(b) *Dogs for handling livestock.* Collie, Shepherd, and other dogs that are imported from any part of the world except Canada, Mexico, and regions of Central America and the West Indies and that are to be used in the handling of sheep or other livestock must be inspected and quarantined at the port of entry for a sufficient time to determine their freedom from tapeworm (*Taenia* spp.). If found to be infested with tapeworm, dogs must be treated under the supervision of an inspector at the port of entry until they are free from infestation.

Done in Washington, DC, this 3rd day of November 2000 .

Bobby R. Acord,

Acting Administrator, Animal and Plant Health Inspection Service.

[FR Doc. 00–28974 Filed 11–9–00; 8:45 am]

BILLING CODE 3410–34–U

DEPARTMENT OF TRANSPORTATION

Federal Aviation Administration

14 CFR Part 71

[Airspace Docket No. 00–ASO–36]

Amendment of Class D Airspace; Kissimmee, FL

AGENCY: Federal Aviation Administration (FAA), DOT.

ACTION: Final rule.

SUMMARY: This action amends Class D airspace at Kissimmee, FL. Orlando Approach Control is the controlling air traffic control (ATC) facility for Instrument Flight Rules (IFR) operations at Kissimmee Municipal Airport, Kissimmee, FL. Due to the proximity of the Kissimmee Municipal Airport to the Orlando International Airport and the Orlando Class B airspace area, Orlando Approach Control has requested the Kissimmee Class D airspace be lowered from 2,500 feet MSL to 1,500 feet MSL.

EFFECTIVE DATE: 0901 UTC, January 25, 2001.

FOR FURTHER INFORMATION CONTACT: Nancy B. Shelton, Manager, Airspace Branch, Air Traffic Division, Federal Aviation Administration, P.O. Box 20636, Atlanta, GA 30320; telephone (404) 305–5586.

SUPPLEMENTARY INFORMATION:

History

On September 25, 2000, the FAA proposed to amend Part 71 of the Federal Aviation regulations (14 CFR part 71) by amending Class D airspace at Kissimmee, FL (65 FR 57567), at the request of Orlando Approach Control, the controlling ATC facility for IFR operations at Kissimmee Municipal Airport. Designations for Class D airspace are published in FAA Order 7400.9H, dated September 1, 2000, and effective September 16, 2000, which is incorporated by reference in 14 CFR 71.11. The Class D designation listed in this document will be published subsequently in the order.

The Rule

This amendment to Part 71 of the Federal Aviation Regulations (14 CFR part 71) amends Class D airspace Kissimmee, FL.

The FAA has determined that this regulation only involves an established body of technical regulations for which frequent and routine amendments are necessary to keep them operationally current. It, therefore, (1) is not a ''significant regulatory action'' under Executive Order 12866; (2) is not a ''significant rule'' under DOT Regulatory Policies and Procedures (44 FR 11034; February 26, 1979); and (3) does not warrant preparation of a regulatory evaluation as the anticipated impact is so minimal. Since this is a routine matter that will only affect air traffic procedures and air navigation, it is certified that this rule will not have a significant economic impact on a substantial number of small entities under the criteria of the Regulatory Flexibility Act.

List of Subjects in 14 CFR Part 71

Airspace, Incorporation by reference, Navigation (air).

Adoption of the Amendment

In consideration of the foregoing, the Federal Aviation Administration amends 14 CFR Part 71 as follows:

PART 71—DESIGNATION OF CLASS A, CLASS B, CLASS C, CLASS D AND CLASS E AIRSPACE AREAS; AIRWAYS; ROUTES; AND REPORTING POINTS

1. The authority citation for 14 CFR Part 71 continues to read as follows:

Authority: 49 U.S.C. 106(g); 40103, 40113, 40120, EO 10854, 24 FR 9565, 3 CFR, 1959–1963 Comp., p. 389; 14 CFR 11.69.

§ 71.1 [Amended]

2. The incorporation by reference in 14 CFR 71.1 of Federal Aviation Administration Order 7400.9H, Airspace Designations and Reporting Points, dated September 1, 2000, and effective September 16, 2000, is amended as follows: Paragraph 5000 Class D Airspace.

* * * * *

ASO FL D Kissimmee, FL [Revised]

Kissimmee Municipal Airport, FL
(Lat. 28°17′23″ N, long 81°26′14″ W)

That airspace extending upward from the surface to but not including 1,600 feet MSL within a 4-mile radius of Kissimmee Municipal Airport, excluding that portion within the Orlando International Airport, FL, Class B airspace area. This Class D airspace area is effective during the specific dates and times established in advance by a Notice to Airmen. The effective date and time will thereafter be continuously published in the Airport/Facility Directory.

* * * * *

Issued in College Park, Georgia, on November 1, 2000.

Wade T. Carpenter,

Acting Manager, Air Traffic Division Southern Region.

[FR Doc. 00–28990 Filed 11–9–00; 8:45 am]

BILLING CODE 4910–13–M

DEPARTMENT OF TRANSPORTATION

Federal Aviation Administration

14 CFR Part 71

[Airspace Docket No. 00–ASO–35]

Amended of Class D and Class E4 Airspace; Gainesville, FL

AGENCY: Federal Aviation Administration (FAA), DOT.

ACTION: Final rule.

SUMMARY: This action amends Class D and Class E4 airspace at Gainesville, FL. The Gainesville VORTAC has been relocated and renamed. As a result of VHF Omni-directional Range (VOR) Standard Instrument Approach Procedure (SIAP) for the Gainesville Regional Airport, Gainesville, FL, is amended. Therefore, the Class E4 extension to the Class D surface area will be rotated clockwise seven degrees. This action will also remove the reference the Gainesville VORTAC from the Class D airspace description.

EFFECTIVE DATE: 0901 UTC, January 25, 2001.

FOR FURTHER INFORMATION CONTACT: Nancy B. Shelton, Manager, Airspace Branch, Air Traffic Division, Federal Aviation Administration, P. O. Box 20636, Atlanta, GA 30320; telephone (404) 305–5586.

SUPPLEMENTARY INFORMATION:

History

On September 22, 2000, the FAA proposed to amend Part 71 of the Federal Aviation Regulations (14 CFR Part 71) by amending Class D and Class E4 airspace at Gainesville, FL (65 FR 57300). Class D and Class E4 airspace designations are published in Paragraphs 5000 and 6004 respectively of FAA Order 7400.9H, dated September 1, 2000, and effective September 16, 2000, which is incorporated by reference in 14 CFR 71.1. The Class D and Class E airspace designations listed in this document will be published subsequently in the Order.

Interested parties were invited to participate in this rulemaking proceeding by submitting written comments on the proposal to the FAA. No comments objecting to the proposal were received.

The Rule

This amendment to Part 71 of the Federal Aviation Regulations (14 CFR part 71) amends Class D and Class E4 airspace at Gainesville, FL.

The FAA has determined that this regulation only involves an established body ot technical regulations for which frequent and routine amendments are necessary to keep them operationally current. It, therefore, (1) is not a ''significant regulatory action'' under Executive Order 12866; (2) is not a ''significant rule'' under DOT Regulatory Policies and Procedures (44 FR 11034; February 26, 1979); and (3) does not warrant preparation of a regulatory evaluation, as the anticipated impact is so minimal. Since this is a routine matter that will only affect air traffic procedures and air navigation, it is certified that this rule will not have a significant economic impact on a substantial number of small entities under the criteria of the Regulatory Flexibility Act.

List of Subjects in 14 CFR Part 71

Airspace, Incorporation by reference, Navigation (air).

Adoption of the Amendment

In consideration of the foregoing, the Federal Aviation Administration amends 14 CFR Part 71 as follows:

PART 71—DESIGNATION OF CLASS A, CLASS B, CLASS C, CLASS D AND CLASS E AIRSPACE AREAS; AIRWAYS; ROUTES; AND REPORTING POINTS

1. The authority citation for 14 CFR Part 71 continues to read as follows:

Authority: 49 U.S.C. 106(g); 40103, 40113, 40120; EO 10854, 24 FR 9565, 3 CFR, 1959–1963 Comp., p. 389; 14 CFR 11.69.

§ 71.1 [AMENDED]

2. The incorporation by reference in 14 CFR 71.1 of Federal Aviation Administration Order 7400.9H, Airspace Designations and Reporting Points, dated September 1, 2000, and effective September 16, 2000, is amended as follows:

* * * * *

Paragraph 5000 Class D Airspace.

* * * * *

ASO FL D Gainesville, FL [Revised]

Gainesville Regional Airport, FL
(Lat. 29°41′24″ N, long. 82°16′18″ W)

That airspace extending upward from the surface to and including 2,700 feet MSL within a 4.3-mile radius of the Gainesville Regional Airport. This Class D airspace area is effective during the specific days and times established in advance by a Notice to Airmen. The effective days and times will thereafter be continuously published in the Airport/Facility Directory.

* * * * *

Paragraph 6004 Class E4 Airspace Areas Designated as an Extension to a Class D Airspace Area

* * * * *

ASO FL E4 Gainesville, FL [Revised]

Gainesville Regional Airport, FL
(Lat. 29°41′24″ N, long. 82°16′18″ W)
Gators VORTAC
(Lat. 29°34′20″ N, long. 82°21′45″ W)

That airspace extending upward from the surface within 2.4 miles each side of the Gators VORTAC 041° radial, extending from the 4.3-mile radius of Gainesville Regional Airport to 7 miles northeast of the VORTAC. This Class E4 airspace area is effective during the specific days and times established in advance by a Notice to Airmen. The effective days and times will thereafter be continuously published in the Airport/Facility Directory.

* * * * *

Issued in College Park, Georgia, on November 1, 2000.

Wade T. Carpenter,

Acting Manager, Air Traffic Division, Southern Region.

[FR Doc. 00–28989 Filed 11–9–00; 8:45 am]

BILLING CODE 4910–13–M

DEPARTMENT OF TRANSPORTATION

Federal Aviation Administration

14 CFR Part 71

[Airspace Docket No. 2000–ASW–19]

Revision of Class E Airspace; Atlanta, TX

AGENCY: Federal Aviation Administration (FAA), DOT.

ACTION: Direct final rule; request for comments.

SUMMARY: This amendment revises the Class E airspace at Atlanta, TX. The development of an Area Navigation (RNAV) Standard Instrument Approach Procedure (SIAP), at Hall Miller Municipal Airport, Atlanta, TX, has made this rule necessary. This action is intended to provide adequate controlled airspace extending upward from 700 feet or more above the surface for Instrument Flight Rules (IFR) operations to Hall Miller Municipal Airport, Atlanta, TX.

DATES: Effective 0901 UTC, March 22, 2001. Comments must be received on or before December 28, 2000.

ADDRESSES: Send comments on the rule in triplicate to Manager, Airspace Branch, Air Traffic Division, Federal Aviation Administration, Southwest Region, Docket No. 2000–ASW–19, Fort Worth, TX 76193–0520. The official docket may be examined in the Office of the Regional Counsel, Southwest Region, Federal Aviation Administration, 2601 Meacham Boulevard, Room 663, Fort Worth, TX, between 9 a.m. and 3 p.m., Monday through Friday, except Federal holidays. An informal docket may also be examined during normal business hours at the Airspace Branch, Air Traffic Division, Federal Aviation Administration, Southwest Region, Room 414, Fort Worth, TX.

FOR FURTHER INFORMATION CONTACT: Donald J. Day, Airspace Branch, Air Traffic Division, Southwest Region, Federal Aviation Administration, Fort Worth, TX 76193–0520, telephone 817–222–5593.

SUPPLEMENTARY INFORMATION: This amendment to 14 CFR part 71 revises the Class E airspace at Atlanta, TX. The development of a RNAV SIAP, at Hall Miller Municipal Airport, Atlanta, TX, has made this rule necessary. This action is intended to provide adequate controlled airspace extending upward from 700 feet or more above the surface for IFR operations to Hall Miller Municipal Airport, Atlanta, TX.

Class E airspace designations are published in Paragraph 6005 of FAA Order 7400.9H, dated September 1, 2000, and effective September 16, 2000, which is incorporated by reference in 14 CFR 71.1. The Class E airspace designation listed in this document will be published subsequently in the order.

The Direct Final Rule Procedure

The FAA anticipates that this regulation will not result in adverse or negative comment and therefore is issuing it as a direct final rule. A substantial number of previous opportunities provided to the public to comment on substantially identical actions have resulted in negligible adverse comments or objections. Unless a written adverse or negative comment, or a written notice of intent to submit an adverse or negative comment is received within the comment period, the regulation will become effective on the date specified above. After the close of the comment period, the FAA will publish a document in the **Federal Register** indicating that no adverse or negative comments were received and confirming the date on which the final rule will become effective. If the FAA does receive, within the comment period, or adverse or negative comment, or written notice of intent to submit such a comment, a document

withdrawing the direct final rule will be published in the **Federal Register**, and a notice of proposed rulemaking may be published with a new comment period.

Comments Invited

Although this action is in the form of a final rule and was not preceded by a notice of proposed rulemaking, comments are invited on this rule. Interested persons are invited to comment on this rule by submitting such written data, views, or arguments as they may desire. Communications should identify the Rules Docket number and be submitted in triplicate to the address specified under the caption **ADDRESSES**. All communications received on or before the closing date for comments will be considered, and this rule may be amended or withdrawn in light of the comments received. Factual information that supports the commenter's ideas and suggestions is extremely helpful in evaluating the effectiveness of this action and determining whether additional rulemaking action is needed.

Comments are specifically invited on the overall regulatory, economic, environmental, and energy aspects of the rule that might suggest a need to modify the rule. All comments will be available, both before and after the closing date for comments, in the Rules Docket for examination by interested persons. A report that summarizes each FAA-public contact concerned with the substance of this action will be filed in the Rules Docket.

Commenters wishing the FAA to acknowledge receipt of their comments submitted in response to this rule must submit a self-addressed, stamped postcard on which the following statement is made: ''Comments to Docket No. 2000–ASW–19.'' The postcard will be date stamped and returned to the commenter.

Agency Findings

The regulations adopted herein will not have substantial direct effects on the States, on the relationship between the national government and the States, or on the distribution of power and responsibilities among the various levels of government. Therefore, it is determined that this final rule will not have federalism implications under Executive Order 13132.

Further, the FAA has determined that this regulation is noncontroversial and unlikely to result in adverse or negative comments and only involves an established body of technical regulations that require frequent and routine amendments to keep them operationally current. Therefore, I certify that this regulation (1) Is not a ''significant regulatory action'' under Executive Order 12866; (2) is not a ''significant rule'' under DOT Regulatory Policies and Procedures (44 FR 11034; February 26, 1979); and (3) if promulgated, will not have a significant economic impact, positive or negative, on a substantial number of small entities under the criteria of the Regulatory Flexibility Act. Since this rule involves routine matters that will only affect air traffic procedures and air navigation, it does not warrant preparation of a Regulatory Flexibility Analysis because the anticipated impact is so minimal.

List of Subjects in 14 CFR Part 71

Airspace, Incorporation by reference, Navigation (air).

Adoption of the Amendment

Accordingly, pursuant to the authority delegated to me, the Federal Aviation Administration amends 14 CFR part 71 as follows:

PART 71—DESIGNATION OF CLASS A, CLASS B, CLASS C, CLASS D, AND CLASS E AIRSPACE AREAS; AIRWAY; ROUTES; AND REPORTING POINTS

1. The authority citation for 14 CFR part 71 continues to read as follows:

Authority: 49 U.S.C. 106(g), 40103, 40113, 40120; E.O. 10854; 24 FR 9565, 3 CFR, 1959–1963 Comp., p. 389.

§ 71.1 [Amended]

2. The incorporation by reference in 14 CFR 71.1 of the Federal Aviation Administration Order 7400.9H, *Airspace Designations and Reporting Points*, dated September 1, 2000, and effective September 16, 2000, is amended as follows:

Paragraph 6005: Class E airspace areas extending upward from 700 feet or more above the surface of the earth.

* * * * *

ASW TX E5 Atlanta, TX [Revised]

Atlanta, Hall Miller Municipal Airport, TX
(Lat. 33°06′06″ N., long. 94°11′43″ W.)
Atlanta NDB
(Lat. 33°06′13″ N., long. 94°11′26″ W.)

That airspace extending upward from 700 feet above the surface within a 6.5-mile radius of Hall Miller Municipal Airport and within 2.5 miles each side of the 237° bearing of the Atlanta NDB extending from the 6.5-mile radius to 7.2 miles southwest of the airport.

* * * * *

Issued in Fort Worth, TX, on November 2, 2000.

Robert N. Stevens,

Acting Manager, Air Traffic Division, Southwest Region.

[FR Doc. 00–28992 Filed 11–9–00; 8:45 am]

BILLING CODE 4910–13–M

DEPARTMENT OF TRANSPORTATION

Federal Aviation Administration

14 CFR Part 71

[Airspace Docket No. 00–ASO–38]

Amendment of Class E3 Airspace; Tallahassee, FL, and Class E4 Airspace; Dothan, AL; Vero Beach, FL; Athens, GA; Columbus Lawson AAF, GA; Meridian/Key Field, MS; Meridian NAS–McCain Field, MS; and Florence, SC

AGENCY: Federal Aviation Administration (FAA), DOT.

ACTION: Final rule.

SUMMARY: This action amends Class E3 airspace at Tallahassee, FL, and Class E4 airspace at Dothan, AL; Vero Beach, FL; Athens, GA; Columbus Lawson AAF, GA; Meridian/Key Field, MS; and Florence, SC, from continuous to part time, as the air traffic control towers at these locations are now part time.

EFFECTIVE DATE: 0901 UTC, January 25, 2001.

FOR FURTHER INFORMATION CONTACT: Nancy B. Shelton, Manager, Airspace Branch, Air Traffic Division, Federal Aviation Administration, P.O. Box 20636, Atlanta, GA 30320; telephone (404) 305–5586.

SUPPLEMENTARY INFORMATION:

History

The air traffic control towers at Tallahassee Regional Airport, FL; Dothan Regional Airport, AL; Vero Beach Municipal Airport, FL; Athens/Ben Epps Airport, GA; Columbus Lawson AAF, GA; Meridian/Key Field, MS; and Florence, SC, no longer operate continuously. Therefore, the Class E3 airspace at Tallahassee, FL, and the Class E4 airspace at Dothan, AL; Vero Beach, FL; Athens, GA; Columbus Lawson AAF, GA; Meridian/Key Field, MS; and Florence, SC, must be amended from continuous to part time. This rule will become effective on the date specified in the **EFFECTIVE DATE** section. Since this action eliminates the impact of controlled airspace on users of the airspace in the vicinity of the Airports during the hours the control towers are closed, notice and public procedure under 5 U.S.C. 553(b) are unnecessary.

Class E3 airspace designations for airspace areas designated as an extension and Class E4 airspace designations for airspace areas designated as an extension to a Class D airspace area are published in paragraphs 6003 and 6004 respectively of FAA Order 7400.9H, dated September 1, 2000, and effective September 16, 2000, which is incorporated by reference in 14 CFR 71.1. The Class E airspace designations listed in this document will be published subsequently in the Order.

The Rule

This amendment to Part 71 of the Federal Aviation Regulations (14 CFR Part 71) amends Class E3 airspace at Tallahassee, FL, and Class E4 airspace at Dothan, AL; Vero Beach, FL; Athens, GA; Columbus Lawson AAF, GA; Meridian/Key Field, MS; and Florence, SC.

The FAA has determined that this regulation only involves an established body of technical regulations for which frequent and routine amendments are necessary to keep them operationally current. It, therefore, (1) is not a ''significant regulatory action'' under Executive Order 12866; (2) is not a ''significant rule'' under DOT Regulatory Policies and Procedures (44 FR 11034; February 26, 1979); and (3) does not warrant preparation of a regulatory evaluation as the anticipated impact is so minimal. Since this is a routine matter that will only affect air traffic procedures and air navigation, it is certified that this rule will not have a significant economic impact on a substantial number of small entities under the criteria of the Regulatory Flexibility Act.

List of Subjects in 14 CFR Part 71

Airspace, Incorporation by reference, Navigation (air).

Adoption of the Amendment

In consideration of the foregoing, the Federal Aviation Administration amends 14 CFR Part 71 as follows:

PART 71—DESIGNATION OF CLASS A, CLASS B, CLASS C, CLASS D AND CLASS E AIRSPACE AREAS; AIRWAYS; ROUTES; AND REPORTING POINTS

1. The authority citation for 14 CFR Part 71 continues to read as follows:

Authority: 49 U.S.C. 106(g); 40103, 40113, 40120; EO 10854, 24 FR 9565, 3 CFR, 1959–1963 Comp., p. 389; 14 CFR 11.69.

§ 71.1 [Amended]

2. The incorporation by reference in 14 CFR 71.1 of Federal Aviation Administration Order 7400.9H, Airspace Designations and Reporting Points, dated September 1, 2000, and effective September 16, 2000, is amended as follows:

Paragraph 6003 Class E3 Airspace Areas Designated as an Extension.

* * * * *

ASO FL E3 Tallahassee, FL [Revised]

Tallahassee Regional Airport, FL
(Lat 30°23′47″ N, long. 84°21′01″ W)
Seminole VORTAC
(Lat 30°33′22″ N, long. 84°22′26″ W)

That airspace extending upward from the surface within 1.3 miles each side of the Seminole VORTAC 175° radial extending from the 5-mile radius of the Tallahassee Regional Airport to 2 miles south of the VORTAC. This Class E airspace area is effective during the specific days and times established in advance by a Notice to Airmen. The effective days and times will thereafter be continuously published in the Airport/Facility Directory.

* * * * *

Paragraph 6004 Class E4 Airspace Areas Designated as an Extension to a Class D Airspace Area.

* * * * *

ASO AL E4 Dothan, AL [Revised]

Dothan Regional Airport, AL
(Lat. 31°19′17″ N, long. 85°26′59″ W)
Wiregrass VORTAC
(Lat. 31°17′04″ N, long. 85°25′53″ W)

That airspace extending upward from the surface within 3.2 miles each side of the Wiregrass VORTAC 156° radial extending from the 4.7-mile radius of the Dothan Regional Airport to 7 miles southeast of the VORTAC. This Class E airspace area is effective during the specific days and times established in advance by a Notice to Airmen. The effective days and times will thereafter be continuously published in the Airport/Facility Directory.

* * * * *

ASO FL E4 Vero Beach, FL [Revised]

Vero Beach Municipal Airport, FL
(Lat. 27°39′20″ N, long. 80°25′05″ W)
Vero Beach NDB
(Lat 27°39′51″ N long. 80°25′10″ W)

That airspace extending upward from the surface within 3.2 miles each side of the 261° bearing from the Vero Beach NDB extending from the 4.2-mile radius of the Vero Beach Municipal Airport to 7 miles west of the NDB. This Class E airspace area is effective during the specific days and times established in advance by a Notice to Airmen. The effective days and times will thereafter be continuously published in the Airport/Facility Directory.

* * * * *

ASO GA E4 Athens, GA [Revised]

Athens/Ben Epps Airport, Athens, GA
(Lat. 33°56′54″ N, long. 83°19′36″ W)
Athens VORTAC
(Lat. 33°56′51″ N, long. 83°19′36″ W)

That airspace extending upward from the surface within 3 miles each side of the Athens VORTAC 195° radial extending from the 4-mile radius of the Athens/Ben Epps Airport to 7 miles south of the VORTAC, and within 3 miles each side of the Athens VORTAC 076° radial extending from the 4-mile radius of the airport to 7 miles east of the VORTAC. This Class E airspace area is effective during the specific days and times established in advance by a Notice to Airmen. The effective days and times will thereafter be continuously published in the Airport/Facility Directory.

* * * * *

ASO GA E4 Columbus Lawson AAF, GA [Revised]

Columbus Lawson AAF, GA
(Lat. 32°20′17″ N, long. 84°59′32″ W)
Lawson VOR/DME
(Lat. 32°19′57″ N, long. 84°59′36″ W)
Lawson NDB
(Lat. 32°17′36″ N, long. 85°01′24″ W)

That airspace extending upward from the surface within 1.2 miles each side of the Lawson VOR/DME 214° radial extending from the 4.2-mile radius of Lawson AAF to 6 miles southwest of the NDB. This Class E airspace area is effective during the specific days and times established in advance by a Notice to Airmen. The effective days and times will thereafter be continuously published in the Airport/Facility Directory.

* * * * *

ASO MS E4 Meridian/Key Field, MS [Revised]

Meridian/Key Field, MS
(Lat. 32°20′00″ N, long. 88°45′04″ W)
Meridian VORTAC
(Lat. 32°22′43″ N long. 88°48′15″ W)

That airspace extending upward from the surface within 2.5 miles each side of the Meridian VORTAC 315° radial extending from the 5.3-mile radius of Meridian/Key Field to 7 miles northwest of the VORTAC. This Class E airspace area is effective during the specific days and times established in advance by a Notice to Airmen. The effective days and times will thereafter be continuously published in the Airport/Facility Directory.

* * * * *

ASO SC E4 Florence, SC [Revised]

Florence Regional Airport, SC
(Lat. 34°11′08″ N, long. 79°43′26″ W)
Florence VORTAC
(Lat. 34°13′59″ N, long. 79°39′26″ W)

That airspace extending upward from the surface within 2.4 miles each side of the Florence VORTAC 049° radial extending from the 4.2-mile radius of the Florence Regional Airport to 7 miles northeast of the VORTAC. This Class E airspace area is effective during the specific days and times established in advance by a Notice to Airmen. The effective days and times will thereafter be continuously published in the Airport/Facility Directory.

* * * * *

Issued in College Park, Georgia, on November 1, 2000.

Wade T. Carpenter,

Acting Manager, Air Traffic Division, Southern Region.

[FR Doc. 00–28991 Filed 11–9–00; 8:45 am]

BILLING CODE 4910–13–M

DEPARTMENT OF LABOR

Employment and Training Administration

20 CFR Part 655

RIN 1205–AB23

Labor Certification and Petition Process for the Temporary Employment of Nonimmigrant Aliens in Agriculture in the United States; Delegation of Authority To Adjudicate Petitions; Deferral of Effective Date

AGENCY: Employment and Training Administration, Labor.

ACTION: Interim final rule with request for comments ; deferral of effective date of final rule.

SUMMARY: The Immigration and Naturalization Service (INS) has informed the Department of Labor (DOL or Department) that it intends to delay INS' delegation to DOL of authority to adjudicate petitions for the temporary employment of nonimmigrant aliens in agriculture in the United States. Additionally, DOL has the need for additional time to effectively implement the new procedures and to train and brief members of the affected public and the employment and training community in the new procedures. Therefore, the Department has determined to defer the effective date of the Final Rule promulgated at 65 FR 43538 (July 13, 2000). Comments are being requested on this action. The rule being deferred amends the Employment and Training Administration (ETA) regulations to implement the delegation of authority to adjudicate petitions for temporary nonimmigrant agricultural workers (H–2A's) from the INS to the Department. A companion Proposed Rule setting forth the fee structure and consolidated form was published at 65 FR 43545 (July 13, 2000). The extended comment period on the Proposed Rule has ended and DOL continues to review the comments.

DATES:

Effective Date: The effective date of the final rule in FR Doc. 00–17641, published at 65 FR 43538 (July 13, 2000), is deferred from November 13, 2000, until October 1, 2001.

Comments: Comments are invited on the deferral of the effective date. Submit comments on or before January 12, 2001.

ADDRESSES: Send comments to Assistant Secretary of Labor for Employment and Training, Attention: Division of Foreign Labor Certifications, Employment and Training Administration, 200 Constitution Avenue, NW., Room N–4456, Washington, DC 20210.

FOR FURTHER INFORMATION CONTACT: Denis M. Gruskin, Senior Specialist, Division of Foreign Labor Certifications, Employment and Training Administration, 200 Constitution Avenue, NW., Room N–4456, Washington, DC 20210. Telephone: (202) 693–2953 (this is not a toll-free number).

SUPPLEMENTARY INFORMATION: The Department of Labor (DOL or Department) published a final rule in this rulemaking in the **Federal Register** on 65 FR 43538 (July 13, 2000), with an effective date of November 13, 2000.

It is DOL's understanding that INS has or will publish a rule delaying the effective date of that agency's delegation of authority to DOL, which would defer DOL's legal authority to exercise INS'' role with respect to H–2A visas.

In addition, the Department found it impracticable to engage in adequate training of federal and State staff and briefing of stakeholders and other members of the public on the new system. This can be accomplished by delaying the effective date of the Final Rule.

DOL has determined to defer the effective date through the end of the current Fiscal Year. This deferral will allow employers, workers, and government personnel time to familiarize themselves with the new system and forms and to resolve concerns over the change. In addition, comments are being sought from interested parties on the deferral of the effective date.

The regulatory certifications set forth in the July 13, 2000, final rule apply to this deferral as well. For the above reasons, the Department finds good cause that prior notice on this rule was impracticable and contrary to the public interest, although in the interest of affording the public as much opportunity as possible to express their views, a post-publication comment period is being offered. 5 U.S.C. 553(b) and (c). The same reasons which justify not having a pre-publication period of notice and comment provide good cause to make this deferral effective upon publication in the **Federal Register**. 5 U.S.C. 553(d)(3).

Accordingly, the effective date of the final rule in FR Doc. 00–17641, published at 65 FR 43538 (July 13, 2000), is deferred until October 1, 2001.

Signed at Washington, D.C., this 7th day of November, 2000.

Raymond L. Bramucci,

Assistant Secretary of Labor for Employment and Training.

[FR Doc. 00–28897 Filed 11–9–00; 8:45 am]

BILLING CODE 4510–30–P

DEPARTMENT OF DEFENSE

Department of the Navy

32 CFR Part 736

RIN 0703–AA60

Disposition of Property

AGENCY: Department of the Navy, DOD.

ACTION: Final Rule; Correction.

SUMMARY: The Department of the Navy published a document in the **Federal Register** on September 5, 2000, (65 FR 53589) amending regulations on disposition of property. One amendment inadvertently removed the authority of the Department of the Navy to sell property not excess to its needs. This document corrects that error.

DATES: Effective on November 13, 2000.

FOR FURTHER INFORMATION CONTACT: Major Chris Carlson, USMC, Regulations and Legislation, FOIA/PA Branch, Administrative Law Division, Office of the Judge Advocate General (Code 13), 1322 Patterson Ave. SE., Suite 3000, Washington Navy Yard, DC 20374–5066. Phone (703) 604–8219.

SUPPLEMENTARY INFORMATION: The Department of the Navy (DON) published a document in the **Federal Register** on September 5, 2000, (65 FR 53589) amending Part 736. In FR Doc. 00–22445, published in the **Federal Register** on September 5, 2000, § 736.5(e) was inadvertently amended. This correction adds back the language on the sale of property that was deleted in the revision to § 736.5(e).

In rule FR doc. 00–22445 published on September 5, 2000, (65 FR 53589) make the following correction. On page 53590, in the third column, at amendment 4(d) correct the paragraph to read:

§ 736.5 Disposition of real and personal property under special statutory authority.

* * * * *

(e) Exchange or sale of property for replacement purposes. Under the authority of section 201(c) of the Federal Property Act (40 U.S.C. 481(c)) and

consistent with Department of Defense implementing regulations, DOD 4140.1–R and the Defense Federal Acquisition Regulation Supplement, the Department of the Navy is authorized in the acquisition of new equipment to exchange or sell similar items which are not excess to its needs, and apply the exchange allowance or proceeds of sale in whole or part payment for the items acquired.

Dated: October 31, 2000.

C.G. Carlson,

U.S. Marine Corps, Alternate Federal Register, Liaison Officer.

[FR Doc. 00–28867 Filed 11–9–00; 8:45 am]

BILLING CODE 3810–FF–P

DEPARTMENT OF TRANSPORTATION

Coast Guard

33 CFR Part 117

[CGD01–00–239]

Drawbridge Operation Regulations: Danvers River, MA.

AGENCY: Coast Guard, DOT.

ACTION: Notice of temporary deviation from regulations.

SUMMARY: The Commander, First Coast Guard District, has issued a temporary deviation from the drawbridge operation regulations governing the operation of the Massachusetts Bay transportation Authority (MBTA)/Amtrak Bridge, at mile 0.05, across the Danvers River between Beverly and Salem, Massachusetts. This deviation allows the bridge owner to keep the bridge in the closed position from 6 a.m. on Saturday November 18, 2000, through 6 p.m. on Sunday November 19, 2000. This action is necessary to facilitate replacement of the submarine power cables at the bridge.

DATES: This deviation is effective from November 18, 2000, to November 19, 2000.

FOR FURTHER INFORMATION CONTACT: John McDonald, Project Officer, First Coast Guard District, at (617) 223–8364.

SUPPLEMENTARY INFORMATION: The MBTA/Amtrak Bridge, at mile 0.05, across the Danvers River, has a vertical clearance of 3 feet at mean high water, and 12 feet at mean low water in the closed position. The existing drawbridge operating regulations are listed at 33 CFR 117.595(b).

The bridge owner requested a temporary deviation from the drawbridge operating regulations to facilitate the necessary maintenance for the replacement of the submarine power cables at the bridge. This deviation from the operating regulations allows the bridge owner to keep the bridge in the closed position from 6 a.m. on Saturday, November 18, 2000, through 6 p.m. on Sunday, November 19, 2000. Vessels that can pass under the bridge without an opening may do so at all times during the closed period.

In accordance with 33 CFR 117.35(c), this work will be performed with all due speed in order to return the bridge to normal operation as soon as possible. This deviation from the operating regulations is authorized under 33 CFR 117.35.

Dated: October 31, 2000.

G.N. Naccara,

Rear Admiral, U.S. Coast Guard Commander, First Coast Guard District.

[FR Doc. 00–28997 Filed 11–9–00; 8:45 am]

BILLING CODE 4910–15–U

ENVIRONMENTAL PROTECTION AGENCY

40 CFR Parts 52 and 81

[MI74–02–7282a; FRL–6896–3]

Approval and Promulgation of State Implementation Plans; Michigan

AGENCY: Environmental Protection Agency.

ACTION: Direct final rule.

SUMMARY: The Environmental Protection Agency (EPA) is adjusting the applicability date for reinstating the 1-hour ozone National Ambient Air Quality Standard (NAAQS) in Genesee, Bay, Midland, and Saginaw Counties, Michigan and is determining that these areas have attained the 1-hour ozone NAAQS. This determination is based on 3 consecutive years of complete, quality-assured, ambient air monitoring data for the 1997–1999 ozone seasons that demonstrate that the areas have attained the ozone NAAQS. On the basis of this determination, EPA is also determining that certain attainment demonstration requirements, and certain related requirements of part D of subchapter I of the Clean Air Act (CAA), do not apply to Genesee, Bay, Midland, and Saginaw Counties.

EPA is also approving the State of Michigan's request to redesignate Genesee, Bay, Midland, and Saginaw Counties to attainment for the 1-hour ozone NAAQS. Michigan submitted the redesignation request for these areas on May 9, 2000. EPA is also approving the State's plan for maintaining the 1-hour ozone standard for the next 10 years as a revision to the Michigan State Implementation Plan (SIP).

In the proposed rules section of this **Federal Register**, EPA is proposing approval of, and soliciting comments on, this SIP revision. If we receive adverse comments on this action, we will withdraw this final rule and address the comments received in response to this action in a final rule on the related proposed rule. We will not open a second public comment period. Parties interested in commenting on this action should do so at this time.

DATES: This ''direct final'' rule is effective January 16, 2001, unless EPA receives adverse written or critical comments by December 13, 2000. If the rule is withdrawn, EPA will publish timely notice in the **Federal Register**.

ADDRESSES: Send written comments to: Carlton T. Nash, Chief, Regulation Development Section, Air Programs Branch (AR–18J), United States Environmental Protection Agency, 77 West Jackson Boulevard, Chicago, Illinois 60604. (We recommend that you telephone John Mooney at (312) 886–6043 before visiting the Region 5 Office.)

A copy of the SIP revision is available for inspection at the Office of Air and Radiation (OAR) Docket and Information Center (Air Docket 6102), Room M1500, United States Environmental Protection Agency, 401 M Street SW., Washington, DC 20460, (202) 260–7548.

FOR FURTHER INFORMATION CONTACT: John M. Mooney, Regulation Development Section (AR–18J), Air Programs Branch, Air and Radiation Division, United States Environmental Protection Agency, Region 5, 77 West Jackson Boulevard, Chicago, Illinois 60604, (312) 886–6043.

SUPPLEMENTARY INFORMATION:

Table of Contents

I. Adjustment of Applicability Date for Reinstating the 1-Hour Ozone Standard
A. Why did EPA revoke the 1-hour ozone standard in Genessee, Saginaw, Midland, and Bay Counties?
B. Why did EPA reinstate the 1-hour ozone standard in Genessee, Saginaw, Midland, and Bay Counties?
C. What does reinstatement mean for Genessee, Saginaw, Midland, and Bay Counties?
II. Determination of Attainment
A. What action is EPA taking?
B. Why is EPA taking this action?
C. What would be the effect of this action?
D. What is the background for this action?
E. Where is the public record and where do I send comments?
III. Redesignation Request
A. What action is EPA taking?
B. What would be the effect of the redesignation?

C. What is the background for this action?
D. What are the redesignation review criteria?
E. What is EPA's analysis of the request?
F. Where is the public record and where do I send comments?
IV. Disclaimer Language Approving SIP Revisions
V. What administrative requirements did EPA consider?
A. Executive Order 12866
B. Executive Order 13045
C. Executive Order 13084
D. Executive Order 13132
E. Regulatory Flexibility
F. Unfunded Mandates
G. Submission to Congress and the Comptroller General
H. National Technology Transfer and Advancement Act
I. Petitions for Judicial Review

I. Adjustment of Applicability Date for Reinstating the 1-Hour Ozone Standard

A. Why Did EPA Revoke the 1-Hour Ozone Standard in Genessee, Saginaw, Midland, and Bay Counties?

On June 5, 1998 (63 FR 31014), July 22, 1998 (63 FR 39432) and June 9, 1999 (64 FR 30911), the EPA revoked the 1-hour ozone NAAQS in many areas around the country in anticipation of implementing the new 8-hour ozone NAAQS that was established in 1997. EPA revoked the 1-hour standard to allow areas that were showing attainment to redirect their focus toward meeting the new 8-hour standard. On June 5, 1998, the EPA revoked the 1-hour standard for Genessee, Saginaw, Midland, and Bay Counties because ozone monitors were showing attainment of the ozone NAAQS.

B. Why Did EPA Reinstate the 1-Hour Ozone Standard in Genessee, Saginaw, Midland, and Bay Counties?

On May 14, 1999, the U.S. Court of Appeals for the District of Columbia Circuit issued a decision on the 8-hour ozone NAAQS that blocked EPA's ability to implement the new standard. That action left nearly 3,000 U.S. counties without any Federal public health standard for ozone. To remedy this situation, on July 20, 2000, EPA published a final rulemaking action in the **Federal Register** (65 FR 45181) to reinstate the 1-hour standard in areas where it had been revoked, including Genessee, Saginaw, Midland, and Bay Counties.

C. What Does Reinstatement Mean for Genesee, Saginaw, Midland, and Bay Counties?

For areas with clean air quality data, like Genessee, Saginaw, Midland, and Bay Counties, the July 20, 2000 rulemaking (65 FR 45182) specifies that reinstating the nonattainment designation will occur 180 days after EPA published the rulemaking, on January 16, 2001. EPA believes that it is appropriate to provide nonattainment areas with clean air quality data since revocation additional time to complete the redesignation process. Therefore, EPA delayed the applicability date of the final rule for 180 days for areas that were designated nonattainment at the time of revocation and continue to have clean data, to allow States to submit redesignation requests and EPA time to act on them prior to the January 16, 2001 applicability date. The July 20, 2000 rule specifies a procedure by which EPA can synchronize the effective date of the reinstatement and redesignate at the same time. EPA is using that procedure in this action.

II. Determination of Attainment

A. What Action Is EPA Taking?

The EPA is determining that the Flint (Genesee County) transitional ozone nonattainment area and the Saginaw-Midland-Bay City (Saginaw, Midland, and Bay Counties) ozone nonattainment area have attained the NAAQS for ozone. On the basis of this determination, EPA is also determining that certain CAA requirements do not apply to these areas as long as they continue to attain the ozone NAAQS. These requirements are section 172(c)(1) attainment demonstration requirements and section 172(c)(9) contingency measure requirement.

B. Why Is EPA Taking This Action?

The EPA believes it is reasonable to interpret provisions regarding attainment demonstrations and certain related provisions to not require SIP submissions, as described further below, if an ozone nonattainment area subject to those requirements is monitoring attainment of the ozone standard (*i.e.,* attainment of the NAAQS is demonstrated with three consecutive years of complete, quality-assured, air quality monitoring data). The EPA is basing this determination upon three years of complete, quality-assured, ambient air monitoring data for the 1997 to 1999 ozone seasons recorded at the Flint monitoring sites that demonstrate that Genessee, Saginaw, Midland, and Bay Counties have attained the ozone NAAQS. Preliminary ozone monitoring data for 2000 continue to show that these areas are attaining the ozone NAAQS.

C. What Would Be the Effect of This Action?

The requirements of section 172(c)(1) concerning the submission of a plan to ensure reasonable further progress (RFP) and the ozone attainment demonstration and the requirements of section 172(c)(9) concerning contingency measures for RFP or attainment will not apply to the area.

D. What Is the Background for This Action?

The EPA believes it is reasonable to interpret provisions regarding RFP and attainment demonstrations and certain related provisions to not require SIP submissions if an ozone nonattainment area subject to those requirements is monitoring attainment of the ozone standard (*i.e.,* attainment of the NAAQS demonstrated with three consecutive years of complete, quality-assured, air quality monitoring data). EPA has interpreted the general provisions of subpart 1 of part D of Subchapter I (sections 171 and 172) as not requiring the submission of SIP revisions concerning RFP, attainment demonstrations, or contingency measures, as explained in a memorandum from John S. Seitz, Director, Office of Air Quality Planning and Standards, entitled ''Reasonable Further Progress, Attainment Demonstration, and Related Requirements for Ozone Nonattainment Areas Meeting the Ozone National Ambient Air Quality Standard,'' dated May 10, 1995 (See *Sierra Club* v. *EPA,* 99 F.3d 1551 (10th Cir. 1996)).

The attainment demonstration requirements of section 182(b)(1) are that the plan provide for ''such specific annual reductions in emissions * * * as necessary to attain the national primary ambient air quality standard by the attainment date applicable under the CAA.'' If an area has in fact monitored attainment of the relevant NAAQS, EPA believes there is no need for an area to make a further submission containing additional measures to achieve attainment. This is also consistent with the interpretation of certain section 172(c) requirements provided by EPA in the General Preamble to Title I of the Clean Air Act Amendments of 1990 (1990 Act). As EPA stated in the Preamble, no other measures to provide for attainment would be needed by areas seeking redesignation to attainment since ''attainment will have been reached'' (57 FR 13564). Upon attainment of the NAAQS, the focus of state planning efforts shifts to the maintenance of the NAAQS and the development of a maintenance plan under section 175A.

Similarly, the EPA has previously interpreted the contingency measure requirement of section 172(c)(9) as no longer applying once an area has

attained the standard since those ''contingency measures are directed at ensuring RFP and attainment by the applicable date'' (57 FR 13564). EPA has exercised this policy most recently in approvals for the Cincinnati, OH and Muskegon, MI areas (65 FR 37879 and 65 FR 52651).

The state must continue to operate an appropriate air quality monitoring network, in accordance with 40 CFR part 58, to verify the attainment status of the area. The air quality data relied upon to determine that the area is attaining the ozone standard must be consistent with 40 CFR part 58 requirements and other relevant EPA guidance and recorded in EPA's Aerometric Information Retrieval System (AIRS).

The determinations in this notice do not shield an area from future EPA action to require emissions reductions from sources in the area where there is evidence, such as photochemical grid modeling, showing that emissions from sources in the area contribute significantly to nonattainment in, or interfere with maintenance by, any other states with respect to the NAAQS (see section 110(a)(2)(D)). The EPA has authority under sections 110(a)(2)(A) and 110(a)(2)(D) of the CAA to require such emission reductions if necessary and appropriate to deal with transport situations.

The EPA has reviewed the ambient air monitoring data for ozone (consistent with the requirements contained in 40 CFR part 58 and recorded in AIRS) for Genesee, Bay, Midland, and Saginaw Counties from the 1997 through 1999 ozone seasons, as recorded at monitoring sites in Genesee County. This data is summarized in Table 1 of this document covering EPA's analysis of the redesignation request. Preliminary monitoring data for 2000 show the area continues to attain the 1-hour ozone NAAQS. On the basis of this review, EPA determines that these areas have attained the 1-hour ozone standard during the 1997–99 period, which is the most recent 3 year time period of air quality monitoring data. The State therefore is not required to submit an attainment demonstration, RFP, and a section 172(c)(9) contingency measure plan.

E. Where Is the Public Record and Where Do I Send Comments?

The official record for this direct final rule is at the addresses in the **ADDRESSES** section at the beginning of this document. The addresses for sending comments are also provided in the **ADDRESSES** section at the beginning of this document. If we receive adverse comments on this action, we will withdraw this final rule and address the comments received in response to this action in a final rule on the related proposed rule. We will not open a second public comment period. Parties interested in commenting on this action should do so at this time.

III. Redesignation Request

A. What Action Is EPA Taking?

The EPA is approving the redesignation request for Genesee, Bay, Midland, and Saginaw Counties because 3 years of ambient monitoring data demonstrate that these areas have attained the ozone NAAQS, and the areas have satisfied the other requirements for redesignation. The EPA is approving the maintenance plans submitted by the Michigan Department of Environmental Quality (MDEQ) as a revision to the SIP.

B. What Would Be the Effect of the Redesignation?

The redesignation would change the official designation of Genesee, Bay, Midland, and Saginaw Counties from nonattainment to attainment for the 1-hour ozone standard. It would also put a plan in place to maintain the 1-hour ozone standard for the next 10 years. This plan includes contingency measures to correct any future violations of the 1-hour ozone standard.

C. What Is the Background for This Action?

The EPA originally designated Genesee, Bay, Midland, and Saginaw Counties (Flint and Saginaw-Midland-Bay City areas) as ozone nonattainment areas under section 107 of the 1977 Act on March 3, 1978 (43 FR 8962). The EPA revisited this original designation in 1991 to reflect new designation requirements contained in the 1990 Act. The 1990 Act authorized the EPA to designate nonattainment areas according to degree of severity of the nonattainment problem. On November 6, 1991 (56 FR 56694), the EPA designated Genesee, Bay, Midland, and Saginaw Counties as ozone nonattainment areas. At the time of the 1991 designations, air quality monitoring data for the Flint area showed that the area had not experienced a violation of the ozone NAAQS between 1988–1990, however, the State had not completed a redesignation request showing that it had complied with the requirements of section 107 of the Act. As a result, EPA designated the area as nonattainment, but did not establish a nonattainment classification, establishing the area as a transitional ozone nonattainment area. The State discontinued ozone monitoring in the Saginaw-Midland-Bay City area prior to EPA's 1991 designations. As a result, up to date monitoring data was not available for these areas, nor had the State completed a redesignation request showing that it complied with the requirements of section 107 of the Act. Based on this, the EPA designated the area as nonattainment, but did not establish a nonattainment classification, establishing the area as an incomplete data ozone nonattainment area. The preamble for the original designation contains more detail on this action (56 FR 56694).

Air quality monitors in Genesee County have since recorded 3 years of complete, quality-assured, ambient air quality monitoring data for 1997–1999, thereby demonstrating that the area has attained the 1-hour ozone NAAQS. While monitoring data is not available for Bay, Midland, and Saginaw Counties, the State has argued that the data collected by the ozone monitors in Genesee County are indicative of ozone levels in Bay, Midland, and Saginaw Counties, and should be used as an indicator of this area's attainment status. As discussed in section E.1., below, EPA agrees with Michigan's assertion.

On May 9, 2000 Michigan submitted a maintenance plan to ensure continued attainment of the ozone standard for the Flint and the Saginaw-Midland-Bay City areas. The State also included materials from the public hearing on the request which it held in Saginaw on July 16, 1997.

D. What Are the Redesignation Review Criteria?

The CAA provides the requirements for redesignating a nonattainment area to attainment. Specifically, section 107(d)(3)(E) allows for redesignation provided that: (1) The Administrator determines that the area has attained the NAAQS; (2) the Administrator has fully approved the applicable implementation plan for the area under section 110(k); (3) the Administrator determines that the improvement in air quality is due to permanent and enforceable reductions in emissions resulting from implementation of the applicable State Implementation Plan and applicable Federal air pollutant control regulations and other permanent and enforceable reductions; (4) the Administrator has fully approved a maintenance plan for the area as meeting the requirements of section 175(A); and, (5) the State containing such area has met all requirements of

section 110 and part D of the CAA which are applicable to the area.

The EPA provided guidance on redesignation in the State Implementation Plans; General Preamble for the Implementation of Title I of the Clean Air Act Amendments of 1990, on April 16, 1992 (57 FR 13498) and supplemented the guidance on April 28, 1992 (57 FR 18070). The EPA has provided further guidance on processing redesignation requests in the following documents:

1. ''Part D New Source Review (part D NSR) Requirements for Areas Requesting Redesignation to Attainment,'' Mary D. Nichols, Assistant Administrator for Air and Radiation, October 14, 1994. (Nichols, October 1994)

2. ''Limited Maintenance Plan Option for Nonclassifiable Ozone Nonattainment Areas,'' Sally L. Shaver, Director, Air Quality Strategies and Standards Division, November 16, 1994.

3. ''Use of Actual Emissions in Maintenance Demonstrations for Ozone and Carbon Monoxide (CO) Nonattainment Areas,'' D. Kent Berry, Acting Director, Air Quality Management Division, November 30, 1993.

4. ''State Implementation Plan (SIP) Requirements for Areas Submitting Requests for Redesignation to Attainment of the Ozone and Carbon Monoxide (CO) National Ambient Air Quality Standards (NAAQS) on or after November 15, 1992,'' Michael H. Shapiro, Acting Assistant Administrator for Air and Radiation, September 17, 1993.

5. ''State Implementation Plan (SIP) Actions Submitted in Response to Clean Air Act Deadlines,'' John Calcagni, Director, Air Quality Management Division, October 28, 1992. (Calcagni, October 1992)

6. ''Procedures for Processing Requests to Redesignate Areas to Attainment,'' John Calcagni, Director, Air Quality Management Division, September 4, 1992.

7. ''Contingency Measures for Ozone and Carbon Monoxide (CO) Redesignations,'' G.T. Helms, Chief, Ozone/Carbon Monoxide Programs Branch, June 1, 1992.

E. What Is EPA's Analysis of the Request?

1. The Area Must Be Attaining the 1-Hour Ozone NAAQS

For ozone, an area may be considered to be attaining the 1-hour ozone NAAQS if there are no violations, as determined in accordance with 40 CFR 50.9 and Appendix H, based on three complete, consecutive calendar years of quality assured monitoring data. A violation of the 1-hour ozone NAAQS occurs when the annual average number of expected daily exceedances is equal to or greater than 1.05 per year at a monitoring site. A daily exceedance occurs when the maximum hourly ozone concentration during a given day is 0.125 parts per million (ppm) or higher. The data must be collected and quality-assured in accordance with 40 CFR part 58, and recorded in AIRS. The monitors should have remained at the same location for the duration of the monitoring period required for demonstrating attainment.

The Michigan request is based on an analysis of quality-assured ozone air quality data. Ambient air monitoring data for calendar years 1997 through calendar year 1999 show no violations of the ozone NAAQS (40 CFR 50.9) in Genesee County. The State collected this data in an EPA approved, quality assured, National Air Monitoring System monitoring network. Table 1 below summarizes the air quality data.

TABLE 1.—1-HOUR OZONE EXCEEDANCES IN GENESEE COUNTY

Site	Year	Exceedances measured	Expected exceedances
Flint Monitor: 26–049–0021	1996	0	0
	1997	0	0
	1998	1	1
	1999	0	0
Otisville Monitor: 26–049–2001	1996	0	0
	1997	0	0
	1998	1	1
	1999	1	1

As discussed in the State's redesignation submittal, ozone monitors operated in Bay County from 1973–1982, and from 1979–1981 in Saginaw County. Due to new monitoring siting criteria, as well as other changes in ozone monitoring techniques, Michigan discontinued monitoring in Bay and Saginaw Counties in 1982. At that time, the monitors had shown attainment of the ozone NAAQS in the Saginaw-Midland-Bay City area since 1978. In the redesignation request, the State argues that recent data from the two Flint monitors is representative of current ozone levels in the Saginaw-Midland-Bay City area. The EPA believes that this is appropriate given the monitoring history of the area, the proximity of the Flint monitors to the Saginaw-Midland-Bay City area, and the population and emissions information that Michigan submitted with the redesignation request. EPA agrees with Michigan's assertion that these monitors are representative of ozone levels in the Saginaw-Midland-Bay City area.

As a result, the area meets the first statutory criterion for redesignation to attainment of the ozone NAAQS. The State has committed to continue to operate a network of monitoring stations in the areas in accordance with 40 CFR part 58. The State will be subject to any changes to the 40 CFR part 58 monitoring requirements if they are changed. (If complete quality assured data show violations of the ozone NAAQS before the final EPA action on this redesignation, the EPA will disapprove the redesignation requests for the Flint and Saginaw-Midland-Bay City areas.

2. The Area Must Have a Fully Approved SIP Under Section 110(k); and the Area Must Have Met All Applicable Requirements Under Section 110 and Part D

Before Genesee, Bay, Midland, and Saginaw Counties may be redesignated to attainment for ozone, the State must have fulfilled the applicable requirements of section 110 and part D. The Calcagni memorandum dated September 4, 1992, states that areas requesting redesignation to attainment must fully adopt rules and programs that come due prior to the submittal of a complete redesignation request.

Section 110 Requirements

General SIP elements are delineated in section 110(a)(2) of the CAA. These requirements include but are not limited to the following: A SIP submittal containing rules the State adopted after reasonable notice and public hearing; provisions to establish and operate appropriate apparatus, methods, systems and procedures necessary to monitor ambient air quality; a permit program to implement provisions of part C, Prevention of Significant Deterioration (PSD), and part D, New Source Review (NSR) permit programs; criteria for stationary source emission control measures, monitoring and reporting; provisions for modeling; and provisions for public and local agency participation.

For purposes of redesignation, EPA reviewed the Michigan SIP to ensure that it satisfied all requirements under the amended CAA through approved SIP provisions. A number of the requirements did not change in

substance and, therefore, EPA believes that the pre-amendment SIP met these requirements. The EPA has analyzed the Michigan SIP and determined that it is consistent with the requirements of amended section 110(a)(2). (See also 61 FR 20458 and *Southwestern Growth Alliance* v. *Browner,* 144 F.3d 984 (6th Cir. 1998)).

Part D: General Provisions for Nonattainment Areas

Before Genesee, Bay, Midland, and Saginaw Counties may be redesignated to attainment, they must have fulfilled the applicable requirements of part D. Under part D, an area's classification indicates the requirements to which it is subject. Subpart 1 of part D sets forth the basic nonattainment requirements applicable to all nonattainment areas, classified as well as nonclassifiable. Subpart 2 of part D establishes additional requirements for ozone nonattainment areas classified under section 186 of the Act. As described in the ''General Preamble for the Implementation of Title I of the Clean Air Act Amendments of 1990,'' specific requirements of subpart 2 may override subpart 1's general provisions (57 FR 13501 (April 16, 1992)). However, as noted in the General Preamble, the subpart 2 requirements do not apply to ''not classified'' ozone nonattainment areas (57 FR 13525). EPA designated Genesee, Bay, Midland, and Saginaw Counties as ''not classified'' ozone nonattainment areas (56 FR 56694, November 6, 1991), codified at 40 CFR § 81.323. Therefore, to be redesignated to attainment, the State must meet the applicable requirements of subpart 1 of part D—specifically sections 172(c) and 176, but not the requirements of subpart 2 of part D.

Subpart 1 of Part D—Section 172(c) Provisions

Section 172(c) sets forth general requirements applicable to all nonattainment areas. Under 172(b), the section 172(c) requirements are applicable as determined by the Administrator, but no later than 3 years from the date of the nonattainment designation.

EPA has determined that Michigan's redesignation request for Genesee, Bay, Midland, and Saginaw Counties has satisfied all of the requirements under section 172(c) necessary for the areas' redesignation to attainment. Many of the general requirements contained in section 172(c) are addressed by the State's pre-amendment submittal which EPA approved on May 6, 1980 (45 FR 29801). In part 2 of this rulemaking, entitled ''Determination of Attainment,'' EPA determines that several of the section 172(c) requirements do not apply since the areas have attained the ozone NAAQS. We address below the requirements for emissions inventories under section 172(c)(3) and permits programs under section 172(c)(5), which are necessary to redesignate the areas.

Section 172(c)(3) requires submission and approval of a comprehensive, accurate, and current inventory of actual emissions. The base year emissions inventory for Genesee, Bay, Midland, and Saginaw Counties is satisfied by the State's submittal of the 1990 inventories for these counties in the redesignation request.

Section 172(c)(5) requires permits to construct and operate new and modified major stationary sources anywhere in the nonattainment area (a NSR program). The EPA has determined that areas being redesignated do not need an approved NSR program prior to redesignation provided that the area demonstrates maintenance of the standard without a NSR program in effect. A memorandum from Mary Nichols dated October 14, 1994 describes the rationale for this decision. See discussion in the Grand Rapids, Michigan notice published on June 21, 1996 (61 FR 31831). EPA has also applied this policy in redesignations of Youngstown-Warren, Columbus, Canton, Cleveland-Akron-Lorain, Dayton-Springfield, Toledo, Preble County, Columbiana County, Clinton County, and Cincinnati Ohio, as well as Detroit, Michigan. Additional information on EPA's rationale is in the approval of the redesignation request for the Cincinnati area (65 FR 37879).

The State has demonstrated that Genesee, Bay, Midland, and Saginaw Counties can maintain the standard without a NSR program in effect, and, therefore, the State need not have a fully approved NSR program prior to approval of the redesignation request for Genesee, Bay, Midland, and Saginaw Counties. The MDEQ's federally delegated PSD program will become effective in Genesee, Bay, Midland, and Saginaw Counties upon redesignation to attainment.

Section 176 Conformity Requirements

Section 176(c) of the CAA requires states to establish criteria and procedures to ensure that federally supported or funded projects conform to the air quality planning goals in the applicable SIP. This requirement applies to transportation plans, programs and projects developed, funded or approved under title 23 U.S.C. and the Federal Transit Act (''transportation conformity''), and to all other federally supported or funded projects (''general conformity''). EPA's conformity rule requires that transportation plans, programs, and projects conform to SIPs and establishes the criteria and procedures for determining whether or not they do. Conformity to a SIP means that transportation activities will not produce new air quality violations, worsen existing violations, or delay timely attainment of the national ambient air quality standards. Section 176 further provides that state conformity revisions must be consistent with Federal conformity regulations promulgated by EPA pursuant to CAA requirements. EPA approved Michigan's general and transportation SIPs on December 18, 1996 (61 FR 66607).

As noted in more detail below, EPA's approval is based in part on a November 16, 1994, memorandum from Sally L. Shaver, Director of the Air Quality Strategies and Standards Division entitled ''Limited Maintenance Plan Option for Nonclassifiable Ozone Nonattainment Areas'' (limited maintenance plan memo), which contains guidance related to the conformity program. This memo allows nonclassifiable ozone areas that are at or below 85 percent of the ozone standard to submit a less rigorous maintenance plan. In these areas, there is no requirement to project emissions over the maintenance period. EPA believes it is reasonable to expect that such an area will not experience so much growth in that period that a violation of the NAAQS would occur. EPA believes that Genesee, Bay, Midland, and Saginaw Counties meet the criteria for limited maintenance and therefore EPA is approving their limited maintenance plan.

The memo notes that the Federal transportation conformity rule (58 FR 62188) and the Federal general conformity rule (58 FR 63214) apply to areas operating under maintenance plans. Under either rule, one means by which a maintenance area can demonstrate conformity of Federal actions is to indicate that expected emissions from planned actions are consistent with the emissions budget for the area. Because EPA believes that an area to which the limited maintenance plan memo applies will not experience so much growth during the maintenance period that a violation of the NAAQS would occur, emissions budgets are not necessary to constrain emissions growth, and need not be capped for the maintenance period. In these cases, EPA considers that Federal projects subject which otherwise demonstrate conformity satisfy the ''budget test'' of

the Federal conformity rules. While this policy does not exempt an area from the need to affirm conformity, it does allow an area to demonstrate conformity without regional emissions analysis.

The adequacy review period for this SIP submission is concurrent with the public comment period on this direct final rule. Because limited maintenance plans do not contain budgets, the adequacy review period for this maintenance plan serves to allow the public to comment on whether limited maintenance is appropriate for Genesee, Bay, Midland, and Saginaw Counties.

Interested parties may comment on the adequacy and approval of the limited maintenance plan by submitting their comments on this direct final rule.

If EPA receives adverse written comments with respect to the adequacy of the Genesee, Bay, Midland, and Saginaw County limited maintenance plan, or any other aspect of our approval of this SIP, by the time the comment period closes, we will publish a timely withdrawal of the direct final rule informing the public that the rule will not take effect. In this case, we will either respond to the comments in our final action or proceed with the adequacy process as a separate action.

Our action on the Genesee, Bay, Midland, and Saginaw County limited maintenance plan will also be announced on EPA's conformity website: *http://www.epa.gov/oms/traq*, (once there, click on the ''Conformity'' button, then look for ''Adequacy Review of SIP Submissions for Conformity'').

3. The Improvement in Air Quality Must Be Due to Permanent and Enforceable Reductions in Emissions

Several Federal and statewide rules are in place which have significantly improved the ambient air quality in the Flint and Saginaw-Midland-Bay City areas, since they last violated the standard in 1988. Existing Federal programs, such as the Federal Motor Vehicle Control Program and the Reid Vapor Pressure (RVP) limit of 9.0 pounds per square inch for gasoline, will not be lifted upon redesignation. These programs will counteract emissions growth as the areas experience economic growth over the life of the maintenance plan.

The State has also adopted VOC rules controlling the loading of gasoline into existing stationary vessels at dispensing facilities; existing cold cleaners; the use of cutback paving asphalt; emissions of VOC from existing metallic surface coating lines; storage of organic compounds in existing fixed roof storage tanks; existing coating lines, emissions of VOC from existing automobile, light-duty truck, and other product and material coating lines; and, emission of volatile organic compounds from existing graphic arts lines. These rules will also remain in place in the applicable areas. In addition, the PSD permits program, and the Federal Operating Permits program will help limit emissions growth.

The EPA finds that the combination of existing EPA-approved SIP and Federal measures ensure the permanence and enforceability of reductions in ambient ozone levels that have allowed the area to attain the NAAQS.

4. The Area Must Have a Fully Approved Maintenance Plan Meeting the Requirements of Section 175A

Section 175A of the CAA sets forth the elements of a maintenance plan for areas seeking redesignation from nonattainment to attainment. The plan must demonstrate continued attainment of the applicable NAAQS for at least 10 years after the EPA approves a redesignation to attainment. Eight years after the redesignation, the State must submit a revised maintenance plan which demonstrates attainment for the 10 years following the initial 10 year period. To address potential future NAAQS violations, the maintenance plan must contain contingency measures, with a schedule for implementation adequate to assure prompt correction of any air quality problems.

Section 175A(d) requires that the contingency provisions include a requirement that the State will implement all control measures that were in the SIP prior to redesignation as an attainment area.

In the limited maintenance plan memo noted above, EPA set forth new guidance on maintenance plan requirements for certain ozone nonattainment areas. The limited maintenance plan memo identified criteria through which certain ''not classified'' ozone nonattainment areas could choose to submit less rigorous maintenance plans. EPA used this policy in the approval of the maintenance plan for Victoria, Texas, on March 7, 1995 (60 FR 12453). As noted in the policy, areas whose design values are calculated at or below 0.106 parts per million (ppm) at the time of redesignation, are no longer required to project emissions over the maintenance period. The 0.106 ppm represents 85 percent of the ozone exceedance level of 0.125 ppm. As explained in the limited maintenance plan memo, the EPA believes if an area begins the maintenance period at or below 85 percent of the ozone exceedance level of the NAAQS, the existing Federal and SIP control measures, along with the PSD program, will be adequate to assure maintenance of the ozone NAAQS in the area.

The method for calculating design values is presented in the June 18, 1990 memorandum, ''Ozone and Carbon Monoxide Design Value Calculations,'' from William G. Laxton, former Director of the Office of Air Quality Planning and Standards Technical Support Division. Michigan developed the redesignation request for the Flint and Saginaw-Midland-Bay City areas in 1997. At that time, based on 1994–1996 monitoring data from the Flint ozone network, the design value at the Flint monitors was .106 ppm and the area qualified for the limited maintenance plan option.

After reviewing the redesignation request, EPA finds that the design value for the Flint monitoring network is no longer within the .106 ppm threshold specified in the limited maintenance plan policy. Using monitoring data from 1997–1999, the Otisville monitoring site, downwind of Flint, shows a design value of .114 ppm, mainly due to two unusually high exceedance days recorded on May 15, 1998 and June 11, 1999.

The EPA performed an analysis of meteorological conditions on these days to determine the likely source of the high ozone values. A detailed discussion on this analysis is in EPA's TSD. Based on this analysis, the EPA concludes that the two episode days in question were unusual in that the winds were blowing from south to southeast, carrying emissions from urban areas in Southeast Michigan into the Flint area. Under more typical conditions, with winds from the west/southwest, emissions from the Flint urbanized area are blown toward the Otisville monitoring site. With winds from the south/southeast, emissions sources from upwind areas around Detroit are responsible for the high ozone levels. EPA's analysis indicates that this was the case on both episode days. As a result, it appears that the high values recorded on these days are primarily due to the transport of ozone and ozone forming emissions from areas outside of Flint.

EPA's limited maintenance plan policy is based on an argument that certain areas need not meet the full maintenance plan requirements because they have achieved air quality levels well below the standard without the application of control measures required by the Act for classified ozone nonattainment areas. Despite its current design value, this argument is true for

the Flint area. In fact, the last monitored violation in the Flint area was in 1975. Exceedances of the 1-hour ozone standard have been monitored only a small number of times in the area over the last two decades.

Furthermore, on October 27, 1998 (63 FR 57356) the EPA published a final rule, known as the NO_X SIP call, requiring 22 States and the District of Columbia to significantly reduce NO_X emissions in the eastern United States to reduce the transport of ozone. In an opinion delivered on March 3, 2000, the Circuit Court for the District of Columbia confirmed the applicability of this regulation on numerous States, including Michigan. As a result, Michigan, and other Midwestern States, must reduce NO_X emissions on a statewide basis to reduce background ozone levels. In Michigan, many of the largest NO_X sources are in Southeast Michigan and reductions from these sources would be expected to directly affect the type of situation that occurred in Flint on May 15, 1998 and June 11, 1999.

Without the two transport related exceedances, the design value in Flint would drop to .106 ppm and the area would qualify under the limited maintenance policy. Since the high values were caused by transport, and since EPA has developed the NO_X SIP call to address the transport problem, the EPA believes that it is appropriate to apply the limited maintenance policy in the Flint and Saginaw-Midland-Bay City areas.

In this action, EPA is approving Michigan's limited maintenance plan for the Genesee, Bay, Midland, and Saginaw Counties because Michigan's submittal meets the requirements of section 175A.

An ozone maintenance plan should address the following five elements: attainment inventory, demonstration of maintenance, monitoring network, verification of continued attainment, and a contingency plan.

Attainment Inventory

The State has adequately developed attainment emission inventories for 1990 that identify VOC and NO_X emissions for the Flint and Saginaw-Midland-Bay City nonattainment areas. EPA has determined that 1990 is an appropriate year on which to base attainment level emissions because monitors in the area showed attainment of the ozone NAAQS at the time.

The methodologies used in developing these inventories are discussed in EPA's TSD and in further detail in the State's redesignation submittal. The State has adequately developed an attainment emissions inventory for 1990 that identifies the levels of VOC and NO_X emissions in the areas sufficient to attain the NAAQS.

These emissions are summarized in Tables 2 and 3 below:

TABLE 2.—1990 ATTAINMENT INVENTORY—VOC EMISSIONS

[Tons per day]

Source type	Flint	Saginaw-Midland-Bay City
On-highway motor vehicle	30.05	34.64
Off-highway motor vehicle	12.05	14.63
Area	22.07	25.15
Point	18.52	38.90
Total	83.15	113.3

TABLE 3.—1990 ATTAINMENT INVENTORY—NO_X EMISSIONS

[Tons per day]

Source type	Flint	Saginaw-Midland-Bay City
On-highway motor vehicle	31.27	38.91
Off-highway motor vehicle	10.89	39.69
Area	7.84	2.34
Point	12.11	209.64
Total	62.11	290.58

Demonstration of Maintenance

Under the limited maintenance plan policy, EPA considers air quality monitoring data showing attainment of the ozone standard as satisfying the maintenance demonstration requirement. As a result, areas are not required to project emissions over the maintenance period. EPA believes that areas that qualify under the limited maintenance policy will benefit enough from the PSD program, any measures that are in the SIP, and Federal measures to ensure maintenance over the initial 10 year maintenance period.

Monitoring Network

The State has committed to continue to operate and maintain the network of ambient ozone monitoring stations in Genesee County in accordance with provisions of 40 CFR part 58.

Verification of Continued Attainment

Tracking—Continued demonstration of attainment of the ozone NAAQS in Genesee, Bay, Midland, and Saginaw Counties depends, in part, on the State's efforts toward tracking indicators of continued attainment during the maintenance period. The tracking plan for Genesee, Bay, Midland, and Saginaw Counties consists of continued ambient ozone monitoring in the areas in accordance with the requirements of 40 CFR part 58.

Triggers—The contingency plan contains one trigger: A monitored air quality violation of the ozone NAAQS in any of the four counties, as defined in 40 CFR 50.9. At this time, two ozone monitors are in place in Genesee County. As such, a violation at either of these monitors would trigger the implementation of contingency measures in all four counties. The trigger date will be the date that the State certifies to the U.S. EPA that the air quality data are quality assured, which will be no later than 30 days after monitoring an ambient air quality violation.

Contingency Plan

Despite best efforts to maintain compliance with the NAAQS, the ambient air pollutant concentrations may exceed or violate the NAAQS. Therefore, as required by section 175A of the Act, Michigan has provided contingency measures with a schedule for implementation if a future ozone air quality problem occurs. Contingency measures in the plan include Reid vapor pressure controls on gasoline, implementation of stage I vapor control systems, and industrial cleanup solvent, plastic parts coating, and wood furniture coating regulations.

The State commits to adopting rules or passing legislation for any selected contingency measure within one year of its selection and submit them to EPA for approval. For the Reid vapor pressure controls and stage I vapor recovery control, the State will implement programs within 2 years of its selection as a contingency measure. For other contingency measures, the State will promulgate regulations within 12 months of selection, and implement the measure within 12 months of adoption.

Commitment To Submit Subsequent Maintenance Plan Revisions

In accordance with section 175A(b) of the Act, the State has committed to submitting a revised maintenance SIP 8 years after the area is redesignated to attainment. Such revised SIP will provide for maintenance for an additional 10 years.

F. Where Is the Public Record and Where Do I Send Comments?

The official record for this direct final rule is located at the addresses in the **ADDRESSES** section at the beginning of this document. The addresses for sending comments are also provided in the **ADDRESSES** section at the beginning of this document. If EPA receives adverse written comments on this action, we will withdraw this final rule and address the comments received in response to this action in a final rule on the related proposed rule. We will not open a second public comment period. Parties interested in commenting on this action should do so at this time.

If we receive adverse written comments on the adequacy of the limited maintenance plan, or any other aspect of our approval of this SIP, by the time the comment period closes, we will publish a timely withdrawal of the direct final rule informing the public that the rule will not take effect. In this case, we will either respond to the comments on the emissions budgets in our final action or proceed with the adequacy process as a separate action.

IV. Disclaimer Language Approving SIP Revisions

Ozone SIPs are designed to satisfy the requirements of part D of the CAA and to provide for attainment and maintenance of the ozone NAAQS. This redesignation should not be interpreted as authorizing the State to delete, alter, or rescind any of the ozone emission limitations and restrictions in the approved ozone SIP. The State cannot make changes to ozone SIP regulations which will render them less stringent than those in the EPA approved plan unless it submits to EPA a revised plan for attainment and maintenance and EPA approves the revision. Unauthorized relaxations, deletions, and changes could result in both a finding of nonimplementation (section 173(b) of the CAA) and in a SIP deficiency call made pursuant to section 110(a)(2)(H) of the CAA.

V. What Administrative Requirements Did EPA Consider?

A. Executive Order 12866

The Office of Management and Budget (OMB) has exempted this regulatory action from Executive Order 12866, entitled ''Regulatory Planning and Review.''

B. Executive Order 13045

Protection of Children from Environmental Health Risks and Safety Risks (62 FR 19885, April 23, 1997), applies to any rule that: (1) Is determined to be ''economically significant'' as defined under Executive Order 12866, and (2) concerns an environmental health or safety risk that EPA has reason to believe may have a disproportionate effect on children. If the regulatory action meets both criteria, the Agency must evaluate the environmental health or safety effects of the planned rule on children, and explain why the planned regulation is preferable to other potentially effective and reasonably feasible alternatives considered by the Agency.

This rule is not subject to Executive Order 13045 because it does not involve decisions intended to mitigate environmental health or safety risks.

C. Executive Order 13084

Under Executive Order 13084, EPA may not issue a regulation that is not required by statute, that significantly affects or uniquely affects the communities of Indian tribal governments, and that imposes substantial direct compliance costs on those communities, unless the Federal government provides the funds necessary to pay the direct compliance costs incurred by the tribal governments, or EPA consults with those governments. If EPA complies by consulting, Executive Order 13084 requires EPA to provide to the Office of Management and Budget, in a separately identified section of the preamble to the rule, a description of the extent of EPA's prior consultation with representatives of affected tribal governments, a summary of the nature of their concerns, and a statement supporting the need to issue the regulation. In addition, Executive Order 13084 requires EPA to develop an effective process permitting elected officials and other representatives of Indian tribal governments ''to provide meaningful and timely input in the development of regulatory policies on matters that significantly or uniquely affect their communities.''

Today's rule does not significantly or uniquely affect the communities of Indian tribal governments. This action does not involve or impose any requirements that affect Indian Tribes. Accordingly, the requirements of section 3(b) of Executive Order 13084 do not apply to this rule.

D. Executive Order 13132

Federalism (64 FR 43255, August 10, 1999) revokes and replaces Executive Orders 12612 (Federalism) and 12875 (Enhancing the Intergovernmental Partnership). Executive Order 13132 requires EPA to develop an accountable process to ensure ''meaningful and timely input by State and local officials in the development of regulatory policies that have federalism implications.'' ''Policies that have federalism implications'' is defined in the Executive Order to include regulations that have ''substantial direct effects on the States, on the relationship between the national government and the States, or on the distribution of power and responsibilities among the various levels of government.'' Under Executive Order 13132, EPA may not issue a regulation that has federalism implications, that imposes substantial direct compliance costs, and that is not required by statute, unless the Federal government provides the funds necessary to pay the direct compliance costs incurred by State and local governments, or EPA consults with state and local officials early in the process of developing the proposed regulation. EPA also may not issue a regulation that has federalism implications and that preempts State law unless the Agency consults with state and local officials early in the process of developing the proposed regulation.

This rule will not have substantial direct effects on the States, on the relationship between the national government and the States, or on the distribution of power and responsibilities among the various levels of government, as specified in Executive Order 13132, because it merely approves a state rule implementing a federal standard, and does not alter the relationship or the distribution of power and responsibilities established in the CAA. Thus, the requirements of section 6 of the Executive Order do not apply to this rule.

E. Regulatory Flexibility

The Regulatory Flexibility Act (RFA) generally requires an agency to conduct a regulatory flexibility analysis of any rule subject to notice and comment rulemaking requirements unless the agency certifies that the rule will not have a significant economic impact on a substantial number of small entities. Small entities include small businesses, small not-for-profit enterprises, and small governmental jurisdictions.

This rule will not have a significant impact on a substantial number of small entities because SIP approvals under section 110 and subchapter I, part D of the CAA do not create any new requirements but simply approve requirements that the State is already imposing. Therefore, because the Federal SIP approval does not create any new requirements, I certify that this action will not have a significant

economic impact on a substantial number of small entities. Moreover, due to the nature of the Federal-State relationship under the CAA, preparation of flexibility analysis would constitute Federal inquiry into the economic reasonableness of state action. The CAA forbids EPA to base its actions concerning SIPs on such grounds. *Union Electric Co.* v. *U.S. EPA,* 427 U.S. 246, 255–66 (1976); 42 U.S.C. 7410(a)(2).

F. Unfunded Mandates

Under sections 202 of the Unfunded Mandates Reform Act of 1995 (''Unfunded Mandates Act''), signed into law on March 22, 1995, EPA must prepare a budgetary impact statement to accompany any proposed or final rule that includes a Federal mandate that may result in estimated costs to State, local, or tribal governments in the aggregate; or to the private sector, of $100 million or more. Under section 205, EPA must select the most cost-effective and least burdensome alternative that achieves the objectives of the rule and is consistent with statutory requirements. Section 203 requires EPA to establish a plan for informing and advising any small governments that may be significantly or uniquely impacted by the rule.

EPA has determined that the approval action promulgated does not include a Federal mandate that may result in estimated costs of $100 million or more to either State, local, or tribal governments in the aggregate, or to the private sector. This Federal action approves pre-existing requirements under State or local law, and imposes no new requirements. Accordingly, no additional costs to State, local, or tribal governments, or to the private sector, result from this action.

G. Submission to Congress and the Comptroller General

The Congressional Review Act, 5 U.S.C. 801, *et seq.*, as added by the Small Business Regulatory Enforcement Fairness Act of 1996, generally provides that before a rule may take effect, the agency promulgating the rule must submit a rule report, which includes a copy of the rule, to each House of the Congress and to the Comptroller General of the United States. EPA will submit a report containing this rule and other required information to the U.S. Senate, the U.S. House of Representatives, and the Comptroller General of the United States prior to publication of the rule in the **Federal Register**. A major rule cannot take effect until 60 days after it is published in the **Federal Register**. This action is not a ''major rule'' as defined by 5 U.S.C. 804(2). This rule will be effective January 16, 2001 unless EPA receives adverse written comments by December 13, 2000.

H. National Technology Transfer and Advancement Act

Section 12 of the National Technology Transfer and Advancement Act (NTTAA) of 1995 requires Federal agencies to evaluate existing technical standards when developing a new regulation. To comply with NTTAA, EPA must consider and use ''voluntary consensus standards'' (VCS) if available and applicable when developing programs and policies unless doing so would be inconsistent with applicable law or otherwise impractical.

The EPA believes that VCS are inapplicable to this action. Today's action does not require the public to perform activities conducive to the use of VCS.

I. Petitions for Judicial Review

Under section 307(b)(1) of the CAA, petitions for judicial review of this action must be filed in the United States Court of Appeals for the appropriate circuit by January 12, 2001. Filing a petition for reconsideration by the Administrator of this final rule does not affect the finality of this rule for the purposes of judicial review nor does it extend the time within which a petition for judicial review may be filed, and shall not postpone the effectiveness of such rule or action. This action may not be challenged later in proceedings to enforce its requirements. (See section 307(b)(2).)

List of Subjects

40 CFR Part 52

Environmental protection, Air pollution control, Intergovernmental relations, Hydrocarbons, Reporting and recordkeeping requirements, Volatile organic compounds, Ozone.

40 CFR Part 81

Environmental protection, Air pollution control, National parks, Wilderness areas.

Authority: 42 U.S.C. 7401–7671 *et seq.*

Dated: October 26, 2000.

Francis X. Lyons,

Regional Administrator, Region 5.

Chapter I, title 40 of the Code of Federal Regulations is amended as follows:

PART 52—[AMENDED]

1. The authority citation for Part 52 continues to read as follows:

Authority: 42 U.S.C. 7401 *et seq.*

Subpart X—Michigan

2. Section 52.1174 is amended by adding and reserving paragraph (r) and adding paragraph (s) to read as follows:

§ 52.1174 Control strategy: Ozone.

* * * * *

(s) Approval—On May 9, 2000, the State of Michigan submitted a revision to the Michigan State Implementation Plan for ozone containing a section 175A maintenance plan for the Flint and Saginaw-Midland-Bay City areas as part of Michigan's request to redesignate the areas from nonattainment to attainment for ozone. Elements of the section 175A maintenance plan include a contingency plan, and an obligation to submit a subsequent maintenance plan revision in 8 years as required by the Clean Air Act. If monitors in any of these areas record a violation of the ozone NAAQS (which must be confirmed by the State), Michigan will adopt, submit to EPA, and implement one or more appropriate contingency measure(s) which are in the contingency plan and will submit a full maintenance plan under section 175A of the Clean Air Act. The menu of contingency measures includes a low Reid vapor pressure gasoline program, stage I gasoline vapor recovery, and rules for industrial cleanup solvents, plastic parts coating, and wood furniture coating.

PART 81—[AMENDED]

1. The authority citation for part 81 continues to read as follows:

Authority: 42 U.S.C. 7401–7871 *et seq.*

2. In § 81.323 the table entitled ''Michigan—Ozone (1-hour standard)'' is amended by revising the entries for ''Flint Area: Genesee County,'' and ''Saginaw-Bay City Midland Area:'' including ''Bay County,'' ''Midland County,'' and Saginaw County to read as follows:

§ 81.323 Michigan.

* * * * *

MICHIGAN—OZONE (1-HOUR STANDARD)

Designated areas	Designation		Classification	
	Date[1]	Type	Date[1]	Type
* * *	*	*	*	*
Flint Area:				
Genesee County	January 16, 2001	Attainment.		
* * *	*	*	*	*
Saginaw-Bay City-Midland Area:				
Bay County	January 16, 2001	Attainment.		
Midland County	January 16, 2001	Attainment.		
Saginaw County	January 16, 2001	Attainment.		
* * *	*	*	*	*

[1] This date is October 18, 2000, unless otherwise noted.

* * * * *

[FR Doc. 00–28805 Filed 11–9–00; 8:45 am]

BILLING CODE 6560–50–U

ENVIRONMENTAL PROTECTION AGENCY

40 CFR Part 132

[FRL–6898–7]

RIN 2040–AD32

Final Rule To Amend the Final Water Quality Guidance for the Great Lakes System To Prohibit Mixing Zones for Bioaccumulative Chemicals of Concern

AGENCY: Environmental Protection Agency (EPA).

ACTION: Final rule.

SUMMARY: Today EPA is promulgating the final rule to amend the Final Water Quality Guidance for the Great Lakes System (Guidance) to prohibit mixing zones for bioaccumulative chemicals of concern (BCCs) in the Great Lakes System, subject to certain exceptions for existing discharges. For existing discharges, the regulation prohibits mixing zones for BCCs starting 10 years after the publication date of the final BCC mixing zone rule. New discharges of BCCs are subject to the mixing zone prohibition immediately upon commencing discharge. EPA had promulgated a mixing zone provision similar to this regulation on March 23, 1995, as part of the Guidance required by section 118(c)(2) of the Clean Water Act. The provision was vacated by the U.S. Court of Appeals for the District of Columbia Circuit in the case of *American Iron & Steel Institute* v. *EPA,* 115 F.3d 979 (D.C. Cir. 1997), and was remanded to the Agency for further consideration. In response to the Court's remand, EPA published a proposal on October 4, 1999, to amend the Guidance to reinstate the provision to prohibit mixing zones for BCCs (64 FR 53632). EPA received many comments from stakeholders throughout the United States on its proposal to prohibit mixing zones for BCCs in the Great Lakes Basin. This final rule reflects EPA's reconsideration of the factual record in response to the Court's remand and public comments received on its proposal.

EFFECTIVE DATE: December 13, 2000.

ADDRESSES: The public docket for this rulemaking, including the proposed rule, economic analysis, and other supporting documents, are available for inspection and copying at U.S. EPA Region 5, 77 West Jackson Blvd., Chicago, IL 60604, by appointment only. Appointments may be made by calling Mary Willis Jackson at (312) 886–3717.

FOR FURTHER INFORMATION CONTACT: Mark Morris (4301), U.S. EPA, Ariel Rios Building, 1200 Pennsylvania Avenue, NW., Washington, DC 20460 (202–260–0312).

SUPPLEMENTARY INFORMATION:

Potentially Affected Entities

Entities potentially affected by today's action are those discharging or intending to discharge BCCs to waters of the United States in the Great Lakes System. Categories and entities that may ultimately be affected include the following:

Category	Examples of potentially affected entities
Industry	Industries discharging or intending to discharge BCCs to waters in the Great Lakes System as defined in 40 CFR 132.2.
Municipalities	Publicly owned treatment works discharging or intending to discharge BCCs to waters of the Great Lakes System as defined in 40 CFR 132.2

This table is not intended to be exhaustive, but rather is presented to provide a guide for readers regarding regulated entities likely to be affected by this action. Listed in the table are the types of entities that EPA is now aware could potentially be affected by this action. Other types of entities not listed in the table also could be affected. To determine whether your facility is affected by this action, you should examine carefully the definition of ''Great Lakes System'' in 40 CFR 132.2 and examine the preamble to 40 CFR part 132, which describes the part 132 regulations. If you have any questions regarding the applicability of this action to a particular entity, consult the person listed in the preceding section titled **FOR FURTHER INFORMATION CONTACT**.

I. Legal Authority

This regulation is promulgated under the authority of sections 118, 301, 303, 402, and 501 of the Clean Water Act (CWA).

II. Introduction

Section 118(c)(2) of the CWA, as amended by the Great Lakes Critical Programs Act of 1990, required EPA to publish proposed and final water quality guidance on minimum water quality standards, antidegradation policies, and implementation procedures for the Great Lakes System. On March 23, 1995, EPA published a final rule entitled ''Final Water Quality Guidance for the Great Lakes System'' (Guidance) in order to satisfy this

requirement. See 60 FR 15366. The 1995 Guidance included ambient water quality criteria for 29 pollutants, including BCCs, that reflect the maximum ambient concentrations of those pollutants that could be present in waters of the Great Lakes Basin without impairing aquatic life, wildlife, or human health. The 1995 Guidance also included implementation procedures that Great Lakes States and Tribes are to use to prepare total maximum daily load (TMDL) analyses and to develop water quality-based effluent limits (WQBELs) for facilities discharging these pollutants. See 40 CFR part 132.

The Great Lakes States are the States of Illinois, Indiana, Michigan, Minnesota, Ohio, New York, Pennsylvania, and Wisconsin. The Great Lakes Tribes are those Tribes as defined in 40 CFR 132.2. Great Lakes Tribes consist of any Tribe within the Great Lakes Basin for which EPA has approved water quality standards under section 303 or that EPA has authorized to administer a National Pollutant Discharge Elimination System (NPDES) program under section 402 of the CWA.

Among the implementation procedures in the 1995 Guidance was procedure 3.C in appendix F. Under this procedure, NPDES permits would have been prohibited from including mixing zones in the calculation of water quality-based effluent limits for new discharges of BCCs after March 23, 1997, or for existing discharges of BCCs after March 23, 2007. EPA also codified exceptions for existing discharges to account for water conservation and technical and economic considerations.

Great Lakes States and Tribes were required to adopt water quality standards, antidegradation policies, and implementation procedures consistent with the criteria methodologies, policies, and implementation procedures specified in the 1995 Guidance by March 23, 1997, and to submit them to EPA for approval or disapproval. See 40 CFR 132.5. In the event EPA disapproves all or part of a State's or Tribe's submission, EPA would publish a final rule identifying the provisions of part 132 that shall apply to discharges in that State or Tribal reservation. See 40 CFR 132.5(f)(2).

The 1995 Guidance was challenged in the U.S. Court of Appeals for the District of Columbia Circuit. On June 6, 1997, the Court issued a decision upholding virtually all of the provisions contained in the 1995 Guidance (*American Iron and Steel Institute, et al.* v. *EPA,* 115 F.3d 979 (D.C. Cir. 1997)); however, the Court vacated the provisions of the Guidance that would have eliminated mixing zones for BCCs (115 F.3d at 985). The Court held that EPA had ''failed to address whether the measure is cost-justified,'' and remanded the provision to EPA for an opportunity to address this issue (115 F.3d at 997). In response to the Court's remand, EPA re-examined the factual record, including its cost analyses, and published the Proposal to Amend the Final Water Quality Guidance for the Great Lakes System to Prohibit Mixing Zones for Bioaccumulative Chemicals of Concern in the **Federal Register** on October 4, 1999 (64 FR 53632). EPA received numerous comments, data, and information from commenters in response to the proposal.

After reviewing and analyzing the information in the rulemaking record, including those comments, EPA has developed the Final Rule to Amend the Final Water Quality Guidance for the Great Lakes System to Prohibit Mixing Zones for Bioaccumulative Chemicals of Concern, to be codified in appendix F, procedure 3.C of 40 CFR part 132. This preamble describes the background and purpose of this final rule, briefly summarizes the rule's major provisions, and summarizes the major issues in the public comments received on the proposal and EPA's responses to them. A detailed discussion of EPA's analysis of comments and issues, as well as its reasons for issuing the final rule to prohibit mixing zones for BCCs in the Great Lakes Basin, are provided in additional technical and supporting documents, which are available in the docket for this rulemaking. Copies of the supporting documents also are available from EPA in electronic format (see section VIII of this preamble). For a detailed discussion of the rule's major provisions, please see the preamble to the proposed rule.

III. Summary of the Final Regulation

Today, EPA is promulgating the final rule to amend 40 CFR part 132, appendix F, procedure 3, to reinstate the mixing zone provisions for BCCs. A mixing zone is the area beyond a point source outfall (*e.g.,* a pipe) in which concentrations of a particular pollutant from a wastewater discharge mix with receiving waters. The water is allowed to exceed the water quality criterion for that pollutant within the mixing zone. Behind the theory of using mixing zones is the belief that by mixing with the receiving waters within the zone, the discharge will become sufficiently diluted to meet applicable water quality criteria beyond the borders of that zone.

Today's rulemaking prohibits or, for existing discharges, phases out mixing zones for BCCs in the Great Lakes System subject to certain exceptions. This means that NPDES permit limitations for BCCs discharged to the Great Lakes System must be set no higher than water quality criteria. Under today's rule, the phase-out of mixing zones is to occur, in most cases, by November 15, 2010. EPA believes this is a reasonable time frame because five out of the eight Great Lakes States have similar State-adopted BCC mixing zone provisions and the remaining three States have been aware since 1997 of EPA's intention to reinstate this provision. See 63 FR 20107 (April 23, 1998). In addition, EPA has not chosen to reduce the phase-out period to less than 10 years (the time frame originally promulgated in the 1995 Guidance), to allow affected dischargers the same time (approximately 10 years) they would have had under the original BCC mixing zone provision.

Under this amendment to Part 132, the mixing zone prohibition would be limited to BCCs—the pollutants of primary concern in the Great Lakes System. EPA's regulations applicable to the Great Lakes System define a BCC, in essence, as any chemical that (1) accumulates in aquatic organisms by a human health bioaccumulation factor (BAF) greater than 1000 (after considering various specified factors), and (2) has the potential upon entering surface waters to cause adverse effects, either by itself or in the form of its toxic transformation product, as a result of that accumulation. See 40 CFR 132.2. The table below lists the BCCs subject to today's rule.

BIOACCUMULATIVE CHEMICALS OF CONCERN (BCCS)

Lindane	Mirex
Hexachlorocyclohexane (BHC)	Hexachlorobenezene
alpha-Hexachlorocyclohexane	Chlordane
beta-Hexachlorocyclohexane	DDD
delta-Hexachlorocyclohexane	DDT
Hexachlorobutadiene	DDE
Photomirex	Octachlorostyrene
1,2,4,5-Tetrachlorobenzene	PCBs
Toxaphene	2,3,7,8-TCDD
Pentachlorobenzene	Mercury
1,2,3,4-Tetrachlorobenzene	Dieldrin

There are two components of this rule. First, today's rule prohibits the establishment of mixing zones for new discharges of BCCs to the Great Lakes

System. This prohibition takes effect as soon as EPA has approved the State's or Tribe's submission with respect to this prohibition or publishes a notice identifying that prohibition as applying within the State's or Tribe's jurisdiction. The definition of ''new discharge'' can be found at procedure 3.C.2 of today's rule. All other discharges of BCCs are defined as existing discharges.

Second, this regulation prohibits mixing zones for existing discharges of BCCs after November 15, 2010, subject to two exceptions: (1) promotion of water conservation; and (2) technical and economic considerations. EPA recognizes that, as a result of water conservation measures, concentrations of a BCC in an effluent may increase slightly, while the mass of the BCC being discharged does not. Therefore, the first exception would allow States and Tribes to grant mixing zones for any existing discharge of BCCs even after November 15, 2010 in cases in which it can be demonstrated that failure to grant a mixing zone would preclude water conservation measures that would lead to overall load reductions in BCCs, even though higher concentrations of BCCs may occur in the effluent. This mixing zone exception is virtually identical to the provision promulgated in 1995.

Regarding the exception for technical and economic considerations, a State or Tribe could authorize a mixing zone for existing discharges of BCCs after November 15, 2010 if the State or Tribe determines that (a) the discharger complies with all applicable requirements of CWA sections 118, 301, 302, 303, 304, 306, 307, 401, and 402 (including existing NPDES water quality-based effluent limitations) for the BCC for which the mixing zone is requested, and (b) the discharger has reduced and will continue to reduce—to the maximum extent possible—its discharge of the BCC for which the mixing zone is requested. This exception would not be available if cost-effective pollution prevention and/or other control and treatment strategies exist that make it technically feasible for the discharger to achieve the applicable water quality criteria at the point of discharge, and if the discharger, or affected community or communities, will not suffer unreasonable economic effects in implementing such strategies.

EPA has modified the technical and economic feasibility provision from the 1995 Guidance to clarify the importance of implementing only those control strategies determined to be cost-effective. EPA expects that exceptions to the BCC mixing zone provision will be granted solely at the discretion of the State or Tribe on a case-by-case basis. See procedure 3.C.5 and 6 for more information on exceptions to the provisions contained herein. EPA received no comments concerning any aspects of either exception as proposed.

To date, the States of Illinois, Indiana, Minnesota, Michigan, and Wisconsin have adopted and submitted to EPA requirements to eliminate or, for existing discharges, to phase out mixing zones for BCCs. If these requirements are retained by the five States, and if EPA determines that they are as protective as today's final rule, EPA will approve those submissions under the procedures set forth in 40 CFR 132.5(f). Any Great Lakes State or Tribe that has not adopted BCC mixing zone provisions as protective as those in today's rule (e.g., New York, Ohio, Pennsylvania) will need to adopt such provisions and submit them to EPA for approval or disapproval pursuant to 40 CFR 132.5 by May 13, 2002, see 40 CFR 132.5(a) and (c) (as amended by today's rule.). If a Great Lakes State or Tribe fails to submit such provisions, or if EPA disapproves the submission, EPA, after giving the State or Tribe an opportunity to make necessary changes, will publish a final rule no later than November 13, 2002 identifying the provisions of today's rule that shall apply to discharges within that State's or Tribe's jurisdiction. See 40 CFR 132.5(c), (d) and (f).

IV. Comments on the Proposed Regulation

EPA solicited comments on the intended amendment in the ''Proposal to Amend the Final Water Quality Guidance for the Great Lakes System to Prohibit Mixing Zones for Bioaccumulative Chemicals of Concern,'' which was published in the **Federal Register** on October 4, 1999 (64 FR 53632). The following sections summarize comments received and EPA's responses.

A. Support for the Regulation

Some commenters on the proposal of this rule support the elimination of mixing zones for BCCs in the Great Lakes System. The majority of these comments address issues such as (1) the consistency between the final rule, the goals of the CWA, and the goals of the Great Lakes Water Quality Agreement (GLWQA), (2) the inappropriateness of mixing zones for BCCs due to BCCs' persistence in the environment, and (3) the adverse health effects BCCs impose on fish and other aquatic organisms, wildlife, and humans. Commenters also urged EPA to extend the proposed rule so that it encompasses other national waters, to apply the prohibition to chemicals other than BCCs, and to include chemicals with BAFs lower than the current 1000 cutoff that was established in the 1995 Guidance. These issues and requests are discussed throughout the remainder of this section.

Phasing out existing mixing zones for BCCs and prohibiting new mixing zones for BCCs will ensure that the 1995 Guidance achieves the goals of the CWA and the objectives of the GLWQA, which is an international agreement between the United States and Canada to restore and maintain the environmental integrity of the Great Lakes ecosystem. Several commenters pointed out that today's rule is an important and necessary step toward achieving the GLWQA's goals to virtually eliminate persistent and bioaccumulative toxics (Article II.a) and to reduce mixing zones to the maximum extent possible (Article IV.f). EPA acknowledges the consistency between today's rulemaking and the objectives of the GLWQA and is promulgating this amendment in an effort to conform to goals that work toward mending and upholding the integrity of the Great Lakes System.

As part of this effort, EPA has judged that mixing zones for BCCs (even of the limited size already authorized by 40 CFR part 132 under certain conditions) for existing discharges should be prohibited to the greatest extent technically and economically possible. A large number of scientists, policy makers, and other stakeholders in the Great Lakes and Canada agree on the need to virtually eliminate BCCs from the Great Lakes Basin and to reduce the size of BCC mixing zones to the maximum extent possible. This is because BCCs, due to their persistent and bioaccumulative nature, are incompatible with mixing zones. By definition, BCCs are chemicals that do not degrade over time. These chemicals accumulate in organisms living in the water and become more concentrated as they move up the food chain—from biota to fish and wildlife to humans. Because the effects of these chemicals are not mitigated by dilution, using a mixing zone to ''dilute'' BCC discharges is not appropriate. Commenters pointed out that dilution and dispersion are inadequate substitutes for removing and treating the BCCs before they are discharged to the Great Lakes' waters. EPA agrees with these commenters because it is the mass of BCCs that poses a problem, not just the concentration. Because dioxins, mercury, polychlorinated biphenyls (PCBs) and other BCCs degrade over long periods of time or do not degrade at all, their

buildup in pockets of sediments creates ''hot spots'' in the environment in which bioaccumulation of toxics in fish and other aquatic organisms can occur at levels that significantly exceed safe levels for consumption by wildlife and humans. The 1995 Guidance required a minimum 10:1 dilution ratio for lake discharges and 25 percent of the critical stream flow for tributary discharges in calculating mixing zones for all pollutants, including BCCs. See 40 CFR part 132, appendix F, procedure 3.D and 3.E. Larger mixing zones also are allowed if a particular demonstration is performed. See 40 CFR part 132, appendix F, procedure 3.F. Thus, with the currently allowable dilution, the mass of BCCs discharged from point sources to the Great Lakes System could be reduced significantly—by a factor of 10 to 100 in certain circumstances—when mixing zones for BCCs are prohibited.

Commenters on EPA's proposal support today's rule because of its ability to help decrease the amount of BCCs to which fish, wildlife, and humans are exposed. The commenters recognize the adverse effects BCCs have on human health and wildlife and that even small concentrations can increase the risks of cancer, organ failure, and a host of other maladies. One commenter noted that contaminating any waterbody with persistent toxic substances that accumulate in the food chain is never rational. Furthermore, it should not be justifiable public policy.

Because the food web that accumulates BCCs can be concentrated in tributaries, bays, and other areas where natural sinks exist—and where fish species are more diverse and productive—the elimination of mixing zones will reduce the probability of adverse effects on these organisms and those that consume them. Fewer pollutants entering the waters will reduce the detrimental effects already discovered in various fish species and wildlife.

In aquatic organisms, effects of BCCs range from death to impairment of reproduction, development, and growth (Sweeney et al., 1993). In wildlife, birds exposed to BCCs have exhibited biochemical dysfunction and metabolic effects, behavioral/neurological disorders, and reproductive impairment (Elliott et al., 1996).

For humans, as is true for wildlife, the main route of exposure to BCCs is through the consumption of Great Lakes fish, which have ''uptaken'' and retained the pollutants from their surrounding environment and food. Potential adverse human health effects resulting from the consumption of contaminated fish include both the increased risk of cancer and the potential for systemic or noncancer risks such as kidney damage (U.S. EPA, 1997). As affirmed by commenters who support today's rule, women who are pregnant and children, in particular, are at risk for being adversely affected by BCCs (U.S. EPA, 1997). BCCs can induce inheritable chromosomal changes in women that could result in birth defects in their infants, cross the human placenta contributing to exposure of the fetus through placental transfer, and accumulate in body tissues. Exposure to BCCs can result in decreased fertility, premature labor, spontaneous abortion, reproductive hormone disorders, increased stillbirths, lack of mammary function, reduced libido, and delayed estrus.

Children may be at greater risk than adults. Because BCCs can accumulate in human milk, women exposed to the pollutants who breastfeed could potentially pass the chemicals on to their infants. Risks to infants and children include central nervous system effects, mortality, low IQ scores, cataracts, congestive heart failure, skin disorders, cancers, immune system dysfunction and immunosuppression, skeletal disorders, neurological/behavioral effects, and endocrinological disorders.

In addition to supporting EPA in its rationale behind the rule, as summarized in the above paragraphs, many commenters strongly advised EPA to expand the proposed rule so that the regulations apply nationwide, not just for the Great Lakes System, and that the BCC mixing zone phase-out should cover chemicals other than BCCs. One commenter noted that, although lakes lend themselves to the most easily quantifiable demonstration of risk to a particular subpopulation, the discharge of BCCs into moving waterbodies is no less problematic. EPA, under a separate undertaking, is evaluating whether mixing zones for BCCs should be prohibited in other national waters and for chemicals other than BCCs.

Commenters also urged EPA to propose an amendment that would address chemicals with a BAF that falls short of the cutoff established by the Guidance. These commenters claimed that the risks to wildlife and humans from chemicals with lower BAFs might be just as severe as those chemicals with BAFs of greater than 1000, particularly when wildlife and humans are exposed to a mix of chemicals found within fish. In response, EPA believes that the current BAFs are sufficient to protect water quality and human health. The Agency wishes to point out, however, that 40 CFR 132.1(d) provides that the methodologies for establishing BAFs and criteria for pollutants, including BCCs, will be evaluated and revised, as appropriate, every three years.

In summary, these commenters stated their support for today's rule. Although some hope to see an extension of the mixing zone prohibition, many were satisfied with the step forward that this rule is making in helping to meet the objectives of the CWA.

B. Benefits Associated With Phase-out and Elimination of Mixing Zones for BCCs

A few commenters asserted that the proposed rule contained no evidence or documentation that restrictions on NPDES dischargers would produce any measurable change in the levels of BCCs in water, sediment, or fish tissue. Others claimed that the proposal would yield no benefits because five of the Great Lakes States have already adopted a similar prohibition on BCC mixing zones and, to date, no mixing zone credit exists for cases in which water quality exceeds applicable water quality standards. One commenter estimated that annual benefits of the proposal would amount to no more than $1.3 to $4.1 million.

EPA disagrees with these claims. EPA believes that the mixing zone prohibition is necessary to protect the integrity of the Great Lakes and that its benefits derive from the minimization or avoidance of the adverse effects summarized in the preceding section. The Court that struck down an earlier version of this regulation noted that EPA had adequately explained the environmental importance of eliminating mixing zones for BCCs. In addition, numerous scientists, policy makers, and other stakeholders in the United States and Canada are urging EPA to reduce the size of BCC mixing zones to the maximum extent possible, which would be a step forward in trying to virtually eliminate BCCs from the Great Lakes Basin as called for by the GLWQA.

Because BCCs are harmful to the environment, any discharge of BCCs—even those discharges that are equivalent to the applicable water quality criteria-have the potential to impair the integrity of the receiving waterbody. Using mixing zones to increase the amount of allowable discharge exacerbates this situation because the effects of BCCs are not limited to the short term, or localized zone of initial dilution, meaning that adverse effects could occur far outside the mixing zone and long after the BCC discharge occurred.

Since point sources affect waterbodies and, hence, fish tissue on a site-specific basis, removing fish advisories and restoring waters requires a reduction in the mass of BCCs that accumulate in depositional areas of the Great Lakes. The bottom levels of the food web biomagnify BCCs that concentrate in these sinks, affecting the higher levels of species that tend to be more productive in these areas. Prohibiting mixing zones for BCCs in the Great Lakes System can reduce the natural sink masses below point source discharges by a factor of 10 to 100 in some circumstances.

EPA reiterates that one of the primary purposes of the 1995 Guidance and, by extension, today's rule is to promote pollution prevention. Approximately one-third of the more than 360 hazardous pollutants in the Great Lakes System could have acute or chronic toxic effects on aquatic life, wildlife, and human health. Had the Guidance's framework been in place 30 years ago when the effects of PCBs from point source discharges began to emerge, States could have moved quickly to control these pollutants, avoiding millions of dollars in cleanup costs, human health impacts, and other environmental damage. Prompted by today's rule, dischargers can use pollutant minimization to control pollutants before new water quality problems arise. With low concentrations of new chemicals being introduced into the environment every year, it would be prudent to try to avoid future cleanup costs now.

Although EPA was not able to quantify all of these benefits in its analysis of the final Guidance as promulgated in March 1995, the Agency believes today's rule is an integral part of the framework created by the Guidance for the type of preventative measures mentioned above. EPA believes that these and other benefits derived from the Guidance and today's rule are indeed significant and, further, draws attention to the potential high costs of future cleanup that, without the help of the BCC mixing zone prohibition, may someday need to be addressed.

Some commenters asserted that the proposed rule would yield no benefits because some Great Lakes States have already adopted a similar prohibition on BCC mixing zones (e.g., Indiana). EPA observes that these commenters do not make the corresponding argument that the rule has no costs in those States. As noted above, the benefits and costs of the rule are directly linked to reducing the mass loading of BCCs to the waterbody. EPA has chosen to assess costs and benefits in these States because EPA would be required to impose these measures through a Federal promulgation if those Great Lakes States withdraw or fail to submit such voluntarily adopted measures.

As for the claim that the annual benefits of the prohibition will be between $1.3 million and $4.1 million, EPA believes that this is an understatement and was made based on a misconception of the methodology EPA used in the Guidance. When EPA developed the 1995 Guidance, EPA did not estimate benefits for the entire Great Lakes Basin; rather, EPA estimated values for three case-study areas only. An extrapolation to the whole Great Lakes Basin from this small number of case studies, as the commenter has done, is inappropriate because EPA was able to estimate basinwide benefits for one benefit category only, and was not able to quantify all categories of benefits even for the three case-study areas (for example, there is no methodology for monetizing noncancer health effects from pollutants like mercury). Nor was EPA able to account for avoided future contamination and cleanup in its analysis of benefits. EPA believes that any disparity between the environmental justification for today's rule (which the Court found to be adequately explained) and estimates of monetary benefits is the result of not being able to account for all potential benefits in dollar values.

C. Source Controls, Pollution Prevention, and Waste Minimization

A number of commenters expressed the opinion that EPA, in its proposal, failed to support its statement that dischargers can comply with the prohibition through product substitution, cleaner technologies, and source controls. These commenters believe that it is unlikely that many publicly-owned treatment works (POTWs) would be able to achieve additional pollutant reductions through source controls alone, particularly for mercury. Some commenters also asserted that EPA did not evaluate the cost impacts on indirect dischargers.

EPA disagrees with these comments. The record shows that it will be technically and economically feasible for many dischargers, including POTWs, to phase out mixing zones for BCCs during the 10-year phase out period. Although EPA acknowledges that at present it may be difficult to identify potential sources of pollutants within POTW service areas, as analytical methods continue to improve, so should the POTWs' abilities to identify and control sources of BCCs and to educate the public on how to prevent pollution by avoiding household products that contain high levels of BCCs or substituting for those products ones that are BCC-free or more environmentally friendly. As discussed below, EPA also considered the cost impact on indirect dischargers.

Even though many facilities may face challenges in achieving effluent limitations derived from Great Lakes standards for mercury, EPA's record shows that when facilities try to control mercury they have been able to achieve significant reductions in their discharge levels. As described in more detail below, in many cases these reductions have been attained by source control, not end-of-pipe treatment. These approaches succeed for other BCCs as well. Less costly than end-of-pipe treatment, source controls have included efforts to control more diffuse sources of BCCs, such as households using lindane-containing products and have resulted in substantial increases in the percentages of BCC removals (U.S. EPA, 1999).

One commenter argued that all POTWs will have a hard time meeting effluent limits for mercury unless a mixing zone is allowed. The two primary reasons for this belief are (1) that POTWs currently have high concentrations of mercury in influents from domestic sources alone (according to the commenter an approximate median of 110 ppt), and (2) that pollution prevention is cost-effective for industrial users only. The conclusion reached by this commenter, then, is that end-of-pipe treatment would need to be added if stringent limitations based on mercury water quality criteria (1.3 ng/L) are to be met. EPA believes that both of the reasons given overstate the issue and that the conclusion is based on an incorrect premise. EPA acknowledges that many POTWs have high concentrations of mercury in their influent and agrees that these high levels need to be significantly reduced if POTWs are to meet the stringent effluent limits contemplated by today's rule. The mere fact that high mercury concentrations exist, however, does not mean that they cannot be controlled at the source, prior to the time they arrive at the POTW. Indeed, EPA's record shows that source controls, pollution prevention, and waste minimization often are far more efficient and cost effective than end-of-pipe treatment for mercury. EPA does not agree that cost-effective opportunities typically occur for POTWs only when there are industrial sources with high loading rates. EPA acknowledges that if the great majority of mercury in a POTW's influent is derived from one or two

sources, obviously it would be easier and more cost-effective to control those sources than it would be to control other, more diverse sources. Nonindustrial sources, however, such as dental and medical facilities, often discharge high concentrations of mercury. These sources are usually classified as ''domestic'' rather than ''industrial'' discharges. In those few cases in which POTWs have seriously attempted to reduce mercury from domestic sources, significant measures of success from control of commercial facilities in ''domestic'' wastewater have been achieved. While dental and medical facilities tend to be more widely distributed than ''industrial'' facilities, reductions in discharges can be organized through a variety of programs that include campaigns directed toward dental and medical practices and public education. In some cases, dental and medical offices are required to remove mercury prior to discharging to sewers. The bottom line is that the treatment of more concentrated wastestreams at the source or pollution prevention at the source is more likely to be cost-effective than treating diluted wastestreams at the POTW.

EPA understands that the control of mercury from ''domestic'' sources would entail costs on the part of the POTW, but such costs are likely to be considerably smaller than those required for end-of-pipe treatment. In sum, the most cost-effective way in which POTWs can substantially reduce mercury discharges thus appears to be pollution prevention and waste minimization. These programs can focus on high concentration high volume industrial discharges to the collection system as well as high concentration low volume discharges, such as those coming from medical and dental facilities. As evidence, EPA provides the example of the Western Lake Superior Sanitary District (WLSSD), which, after evaluating the costs involved in meeting more stringent water quality-based effluent limits for mercury with end-of-pipe treatment, concluded that pollution prevention techniques were the preferable control strategy. As of 1996, WLSSD had successfully reduced mercury concentrations at the wastewater treatment plant by more than 74% from 1990 dry sludge levels (from 4.50 ppm to 1.15 ppm) and by more than 97% from 1990 effluent levels (from 0.58 ppb to 0.015 ppb), which brought WLSSD well into compliance with its existing WQBEL. Additional examples of source control programs can be found in Overview of P2 Approaches at POTWs, Draft, Office of Science and Technology, March (U.S. EPA, 1999). EPA believes that facilities like WLSSD, with the use of super clean analytical methods to better identify and characterize sources of mercury, will be able to advance their pollution prevention efforts to further reduce the levels of mercury in their sludge and effluent as mixing zones are phased out over the next 10 years.

Further, EPA believes that recent data submitted by the Association of Metropolitan Sewerage Agencies (AMSA) support EPA's position that product substitution, cleaner technologies, and source controls are the most efficient and cost-effective means of reducing BCCs. These data indicate that POTWs are achieving, on average, about 97 percent removal of mercury from their influent with an average effluent discharge concentration of about 9 parts per trillion (ppt or ng/L). Wastewater from industrial and commercial establishments, however, such as hospitals, medical waste incinerators, industrial laundries, medical/dental/clinical laboratories, dental offices, and others, can be discharged directly to the POTW's wastewater collection system virtually unregulated at concentrations that exceed 1 million ppt. Indeed, AMSA's data indicate that influent mercury concentrations at the headworks of POTWs range from 50 ppt to 1300 ppt.

What this means is that POTWs are channeling a significant amount of mercury into their sludge (approximately 30 to 40 tons nationally), which results in a release of chemicals into the environment when the sludge is disposed of through incineration or land-application practices. EPA estimates that between 0.6 and 1.9 tons of mercury are emitted each year from sewage sludge incinerators in the vicinity of the Great Lakes Basin. In essence, pollutants are merely being transferred from one medium to another. Therefore, EPA believes that the solution to controlling mercury releases to the environment is not to change the medium from the POTW's influent to its sludge and effluent, but to either prevent mercury from entering the wastewater collection system at the source through product substitution, waste minimization, or process modification, or by removing and recycling mercury at the source (i.e., employing source controls) using state-of-the-art technology. Such cost-effective source controls, which will prevent additional environmental releases, provide an auxiliary environmental benefit to today's rulemaking.

In conclusion, pollution prevention (including product substitution by households), waste minimization, and source controls for high concentration low volume industrial and commercial discharges (as well as high concentration high volume discharges) to the POTW's collection system, are the most cost-effective approaches to reducing overall environmental releases to water, as well as to air and land. At facilities in which these approaches have been implemented, substantial reductions in BCC concentrations, including mercury concentrations in POTW influents, sludges, and effluents, have been achieved. Where these reductions are insufficient to meet WQBELs, POTWs can seek an exception to the mixing zone prohibition. A condition for eligibility is that the facility has and will continue to implement controls or pollution prevention measures to reduce or ultimately eliminate the BCC. Thus, aggressive pollution prevention efforts may well achieve the necessary reductions to meet a WQBEL with no mixing zone, but if not, will help the facility to qualify for an exception.

With respect to costs, in 1995, EPA estimated potential costs to indirect dischargers of implementing the Guidance with the mixing zone provision to be between $6.6 million and $19.9 million per year (in 1994 dollars). In addition, EPA's estimate of total costs to direct and indirect dischargers to implement the Guidance in 1995 (including the mixing zone provision) of $60 million to $380 million per year included source control costs for POTWs (i.e., costs to control indirect discharges). EPA's analysis of today's rule provides an estimate of the portion of the $60 million to $380 million cost range that is attributable to just the phase out and elimination of mixing zones. By including costs for source controls at POTWs, EPA's cost estimates reflect costs that could be passed on to dischargers to POTWs. EPA also conducted an analysis of potential impacts on small entities. Although this analysis looks at small dischargers that are direct dischargers (the Guidance only regulates direct dischargers), EPA did not find a significant impact on small entities. In addition, an independent economic analysis of the Guidance (including the BCC mixing zone prohibition) concluded that it would have an imperceptible impact on the region's economy (DRI/McGraw-Hill, 1993). Thus, EPA can only conclude that the impacts on many industries discharging to POTWs will not be significant.

D. Other Cost Issues Related to Rulemaking Implementation

A commenter from California expressed concern that end-of-pipe treatment would be necessary to meet water quality-based effluent limitations based on water quality criteria for BCCs in the Great Lakes and that such treatment would cost $2.45 billion to implement in California alone. Additional commenters cited an Ohio study that reported that EPA's cost estimates were too low and that the elimination of mixing zones for BCCs in the Great Lakes will result in significant costs for dischargers.

EPA disagrees with the claim that today's rule would force the construction and operation of extraordinary treatment. As discussed earlier EPA believes that an aggressive pollutant minimization program consisting of source controls, pollution prevention (e.g., product substitution or process modification), and public education, can attain effluent limits based on achieving criteria end-of-pipe. While there are new data showing that mercury comes from a variety of sources and products (e.g., industrial, commercial, household), no one to date has demonstrated that an aggressive long-term pollutant minimization program containing these features has failed in this regard, or that, as a result, the State or community had to force the construction of extraordinary end-of-pipe treatment that was later determined to be cost ''ineffective'' with no environmental benefit. In addition, the sampling results presented by AMSA for mercury at POTWs in and out of the Great Lakes Basin do not provide evidence that Great Lakes standards for BCCs cannot be met without end-of-pipe treatment. EPA recognizes that discharges from some facilities exceed the mercury criterion, but, based on results from facilities that have tried to control mercury, significant reductions in discharge levels have been achieved. In many cases, these reductions have been attained by source control, not end-of-pipe treatment, demonstrating the feasibility of this approach. (Refer to section IV.C for more discussion on the benefits of source controls). EPA also notes that if, after ten years, it appears that a pollution minimization program at a facility will not achieve the necessary BCC reductions, today's rule affords States and Tribes the flexibility to authorize BCC mixing zones when additional controls are not technically feasible or cost-effective.

Even though the rule is only applicable to the Great Lakes Basin, EPA disagrees with the claim that implementing the rule in California would cost $2.45 billion. The cost tables offered by the commenter to support this estimate do not provide information on the current levels of mercury or other BCC concentrations in California POTWs, the estimated reductions needed to achieve revised standards for BCCs, or the treatment already in place at these facilities. Instead, the cost tables provide only calculations of a worst-case estimate assuming all California POTWs would need to implement lime precipitation, carbon adsorption, and reverse osmosis. A thorough facility-level analysis, which was not furnished by the commenter, is essential if the commenter wishes to provide meaningful cost estimates. Further, EPA has not seen impacts of the magnitude indicated by the commenter in other regions of the country that have aggressive water quality standards programs. Moreover, data for California POTWs evaluated by EPA as part of analysis of the California Toxics Rule do not support the claim that all POTWs would need end-of-pipe treatment to meet criteria end-of-pipe for mercury and other BCCs in California.

With respect to comments regarding the Ohio mercury study, EPA believes that Ohio's alternative cost analysis for mercury is not compelling here because it assumes that end-of-pipe treatment is necessary in cases when EPA would conclude otherwise. EPA believes that this is an artificial analysis of the options required of dischargers. EPA's own estimates instead assume a combination of end-of-pipe treatment and lower cost alternatives such as process modification, waste minimization, pollution prevention, source controls, and public education. In addition, Ohio's estimates are also not comparable to EPA's because they reflect not only the costs of today's mixing zone rule but also costs associated with the Guidance promulgated in 1995. EPA's estimates for today's rule reflect only the impact of the BCC mixing zone provision, not the impact of the entire 1995 Guidance. Using this estimate, as well as information on the contribution of air sources to mercury water concentrations in Ohio, Ohio adopted a variance provision for mercury for point source dischargers that requires dischargers, in order to obtain the variance, to implement a plan of study and pollutant minimization plan for identifying and reducing loadings of mercury. Thus, Ohio variance provision employs much the same control strategies contemplated by EPA.

E. Point Source Loadings

Some commenters on EPA's proposed rule argued that point sources contribute a relatively insignificant amount of BCCs (mercury, in particular) when compared to the total accumulation of BCCs in the Great Lakes caused by other sources, such as atmospheric deposition.

EPA disagrees with the assertion that point source loadings are insignificant and believes that comparing the total contribution of BCCs from point sources and atmospheric sources to the entire Great Lakes System often ignores the nature of point source discharges and their spatial impact on the environment. Macro-scale analyses of the atmospheric contribution of BCCs to the Great Lakes System is not comparable with localized point source studies because those analyses assume that atmospheric deposition is constant and uniform over a significantly larger geographical area like the Great Lakes Basin. The water column concentrations from air deposition derived from such assumptions simply assume that the Great Lakes Basin is one unique, enormous, completely mixed system. These assumptions are used by researchers who study the fate and transport of pollutants on a large-scale system, not by researchers who address localized impacts on a much smaller scale, such as the ones created by point source dischargers.

By their very nature, point source discharges create ''hot spots'' within the Great Lakes System where elevated concentrations of BCCs have a potential adverse impact on aquatic life, wildlife, and human health. In other words, a point source discharge does not disperse and mix completely throughout the entire Great Lakes System, as is assumed for BCCs from atmospheric deposition. Therefore, comparing contributions from the two sources on such a large scale conceals the real impact of BCCs from point source discharges. In fact, when assessing the impact of a point source discharge, water quality analysts do not perform a mass balance on the entire lake system, but rather on the specific zone of influence of the point source discharge where atmospheric deposition may be insignificant and generally not taken into account.

F. TMDLs and Other CWA Issues

Some commenters asserted that a BCC mixing zone prohibition is inconsistent with the Clean Water Act and implementing regulations and they argue that EPA erroneously concluded that mixing zones are never permissible

in impaired waters. Others assert that today's rule would interfere with States' abilities to control discharges through a TMDL process. Other commenters simply assert that BCC mixing zones should be available wherever the area of impact from the discharge is not biologically significant.

With respect to the first assertion, the question of when and whether mixing zones (for any pollutant) are permissible in impaired waters is outside the scope of today's rule. Today's rule applies only after the permitting authority has determined that a mixing zone for BCCs might otherwise be available in the Great Lakes System under the Clean Water Act and State and federal implementing regulations and standards. Today's rule establishes restrictions on the availability of such mixing zones. In addition, the general availability of mixing zones in impaired waters was not relevant to EPA's cost estimates for today's rule. Rather, EPA estimated its costs for this rule based on the perhaps over-broad assumption that mixing zones for BCCs would be available throughout the Great Lakes for each discharger with known or suspected BCC discharges.

EPA's discussion in the preamble to the proposed rule about the availability of mixing zones in impaired waters generated considerable concern that EPA was announcing a new policy banning mixing zones in impaired waters. EPA does not have a general policy on the availability of mixing zones in impaired waters at this time and generally defers to States on this issue. What the preamble discussion reflected was the application of provisions in procedure 3 governing the calculation of wasteload allocations in various situations. Under procedure 3.B.c.3, background levels of the pollutant must be accounted for in determining wasteload allocations (WLAs). When background levels of the pollutant for which a mixing zone is sought already exceed the applicable criterion in the receiving water, there may be no available dilution, despite the availability of a mixing zone. (Exceptions might be where there are no currently available data for calculating background values as provided in 3.B.9 or where anticipated loading reductions would lower background levels (see 3.C.3.b.iii) and ''free up'' assimilative capacity for use in calculating WLAs.) Thus, the preamble discussion in the proposal used the absence of a mixing zone as a simplified way of discussing other procedures that might have the same effect when calculating WLAs for discharges to impaired waters.

With respect to the second assertion, EPA agrees that today's rule limits the discretion of Great Lakes States to use a TMDL as a vehicle for establishing mixing zones for BCCs in the Great Lakes System. EPA believes that this restriction is reasonable because of the documented environmental and health effects caused by BCCs in the Great Lakes System. EPA notes, however, that Great Lakes States are not absolutely foreclosed from authorizing a mixing zone for BCCs in the context of a TMDL. For existing dischargers, today's rule provides for a 10-year phase-out period that allows dischargers sufficient time to develop and implement control strategies to achieve WQBELs based on meeting water quality criteria end-of-pipe. The rule also provides for exceptions to the mixing zone prohibition for existing discharges of BCCs. In addition to the water conservation exception, the rule authorizes an exception to account for technical and economic circumstances. This exception could be employed, at the discretion of the State, beyond the 10-year period (perhaps implemented through a TMDL) if the State determines that more aggressive controls aimed at achieving criteria at the end of the pipe would not be cost-effective or economically or technically feasible for the existing BCC discharge in question.

Finally, in response to the third assertion, regarding the availability of mixing zones when the impact is not biologically significant, EPA is particularly concerned with how commenters are defining ''not biologically significant.'' EPA does not consider mixing zones an entitlement and does not agree that it is reasonable to not seek reduction of mass loadings of BCCs to areas of the Great Lakes System that no longer are considered ''biologically significant.'' In many cases, these areas have been biologically impacted because of the discharge of these pollutants. That is no reason that they should remain aquatic waste dumps especially when improved water quality is feasible. Further, one of the basic tenets underlying the mixing zone prohibition is that the adverse impacts of BCC discharges can almost never be limited to areas that are determined to be biologically or otherwise insignificant. If the receiving water is connected to another waterbody, that other waterbody would almost certainly be affected adversely by BCC discharges. States, nevertheless, have the flexibility to allow a mixing zone under certain exceptions, as noted above.

G. EPA's Fulfillment of the Court Remand

In 1997, the U.S. Court of Appeals for the District of Columbia Circuit remanded the provisions of the Guidance to phase out and eliminate mixing zones for BCCs. The Court found that ''[a]lthough the EPA appears to have shown that eliminating mixing zones is not without some environmental benefit, the agency simply failed to address whether the measure is cost-justified. We remand the matter in order to afford the EPA an opportunity to do just that,'' *American Iron & Steel Institute (AISI)* v. *EPA,* 115 F.3d 979 (D.C. Cir. 1997). This finding resulted because the Agency had estimated the total cost of eliminating BCC mixing zones at $200,000 yet did not explain a comment estimating at approximately $300,000 the cost to one town of removing the BCC mercury from its sewage discharge. Commenters on the proposal for this rulemaking asserted that EPA's revised cost estimates had been underestimated and that EPA had not yet satisfied this order.

EPA's 1995 sensitivity analysis on the BCC mixing zone provisions of the Guidance produced the $200,000 estimate because State derived permit limits (based on State water quality standards and mixing zone requirements) and Guidance-based permit limits (derived without a mixing zone) were both below analytical method detection levels. This provided EPA with little information concerning the effectiveness of possible pollution control strategies that the Guidance might impose over those that would be required to achieve current State (i.e., pre-Guidance) permit limits. EPA recognized at the time that its mixing zone sensitivity analysis did not produce a justifiable cost estimate and supplemented it with a second analysis that evaluated the possible cost impacts of reducing potential hidden loadings of BCCs as future analytical detection methods improve. This analysis showed that if hidden loadings exist and analytical method detection levels improve, significant costs impacts from reducing BCCs could occur. However, this analysis did not evaluate the impact of the BCC mixing zone prohibition alone.

As such, EPA has reevaluted the comment from the City of Owosso on the proposed Guidance in which they asserted that it would cost $300,000 to remove mercury from their sewage discharge. EPA notes that the $300,000 estimate presented by the City of Owosso is not comparable to the cost that was estimated in 1995 for the

elimination of mixing zones for BCCs ($200,000) nor is it comparable to the costs estimated for today's rule. This is because the City's cost is the total cost estimated to be necessary to comply with all of the requirements contained in the 1995 Guidance (as proposed). That is, the City did not distinguish between the original BCC mixing zone provision and the rest of the Guidance. The $300,000 estimate does not represent the incremental cost of eliminating mixing zones for BCCs. Nor did the City provide in its comment any information regarding the State's mercury water quality standard for the receiving water (Michigan's mercury standard that it has been using for over 15 years to protect human health and wildlife is as stringent as the mercury criteria promulgated in the 1995 Guidance, but less stringent than the criteria in the proposed Guidance), or the dilution and ambient background data that is used by the State permitting authority to evaluate reasonable potential and calculate permit limits for this facility when mixing zones are allowed. Nonetheless, the City's cost estimate of $300,000 is within the average cost range per municipal facility that EPA calculated for its economic analysis of the entire 1995 Guidance (from $75,185 to $822,251 under the low and high scenarios, respectively).

In addition, the City did not indicate in its comment if it had previously conducted any pollution prevention or minimization efforts among its users. Although the commenter describes the industrial contribution to its headworks as ''light,'' this is not a sufficient argument to disregard, without further assessment, the true impact of the existing industrial discharges and the applicability of pollution prevention to control them. Most importantly, the City did not indicate whether or not it had conducted pollution prevention assessments at any medical and dental offices that it serves. Medical and dental offices have been found, in many cases, to significantly contribute to the mercury levels in the influents to POTWs but have controllable sources of mercury that are readily amenable to cost-effective pollution prevention techniques.

Nonetheless, as discussed above, EPA has revised its economic sensitivity analysis of today's BCC mixing zone provision in response to the Court remand. EPA's estimated cost range for the 1995 Guidance, which included the 1995 provision to prohibit mixing zones for BCCs, was $60 million to $380 million per year. EPA estimates, based on its revised analysis, that the portion of that cost range attributable to today's rule to prohibit mixing zones for BCCs is between $12 million and $35 million per year (not $200,000 as was indicated in 1995).

Not only does EPA believe that this revised estimate is reasonable, it believes that the upper estimate ($35 million annually) may be overstated. This is because the upper estimate is based on pre-1995 effluent data. When EPA supplemented these data for today's rule using high-resolution and super clean analytical techniques for detecting BCCs in POTW effluents, it obtained the $12 million per year estimate. This lower estimate is due to the fact that concentrations in BCCs in POTW effluents were found to be substantially lower than expected.

Complementing the Agency's opinion in this regard is DRI/McGraw-Hill's independent review of the analyses of costs for the 1995 Guidance from which the costs for the proposed rule were derived. This review found EPA to be ''conservative in the sense that, on the whole, higher costs were adopted in cases where assumptions were required due to incomplete data'' (DRI/McGraw-Hill, 1995). Thus, EPA expects that its cost estimates overstate, rather than underestimate, the costs associated with the Guidance and, by extension, today's rule.

For these reasons and other reasons set forth in the rulemaking record, EPA believes that its revised economic analysis provides a substantiated estimate of the potential incremental costs of the rule. EPA also believes that today's rule is ''cost-justified.'' That is, EPA believes that the estimated costs are reasonable in view of the benefits derived from minimizing the adverse effects of pollutants such as mercury in the Great Lakes System as a result of this rule. Today's rule also complies with the test articulated in the GLWQA, which called for the reduction of BCC mixing zones to the maximum extent possible. EPA estimated that today's rule will result in a reduction of between 225,000 and 668,000 toxic-weighted pounds (or between 876 and 81,718 unweighted pounds) of pollutants from the Great Lakes System each year. This includes loadings of chlordane, DDT, dieldrin, hexachlorocyclohexane, alpha-hexachlorocyclohexane, beta-hexachlorocyclohexane, hexachlorocyclohexane, lindane, mercury, PCBs, pentachlorobenzene, 1,2,4,5-tetrachlorobenzene, 2,3,7,8-TCDD, and toxaphene. As described previously, this will reduce the accumulation of BCCs in depositional areas of the Great Lakes, reducing the probability for bioaccumulation in the food chain and adverse effects on fish, wildlife, and humans. EPA believes that these avoided effects justify the costs even when the cost to remove a pound of a specific pollutant may be relatively high.

In addition, EPA has codified exceptions to the mixing zone prohibition to ensure that the BCC reductions achieved under the rule are both technically feasible and cost-effective. Procedure 3.C.6.a.ii states that dischargers must reduce the loadings of BCCs to ''the maximum extent possible such than any additional controls or pollution prevention measures to reduce or ultimately eliminate the BCC would result in unreasonable economic effects on the discharger or the affected community because the controls or measures are not feasible or cost-effective.'' As noted above in Section III, EPA modified this provision from the 1995 Guidance to clarify the importance of implementing only those control strategies determined to be cost-effective. For example, if the State determined that the discharger or affected community would face unreasonable economic effects as a result of implementing the rule, it could grant the exception.

In relation to this topic, some commenters alleged that the cost justification required by the Court's remand necessitated a justification of benefits. However, as several industry commenters have observed in arguing that EPA's benefits analysis is irrelevant, the AISI Court already has held that EPA adequately explained the environmental benefits of its BCC mixing zone prohibition. Moreover, EPA may have understated the resulting benefits, because many benefits categories are not amenable to quantification (e.g., estimating the number of noncancer human health cases avoided from exposure to fish contaminated with mercury and monetizing those benefits) and can only be discussed in qualitative terms. In addition, EPA's benefits estimates do not account for the impact of pollution prevention strategies with respect to the environment as a whole; as a result of today's rule, not only will fewer BCCs be discharged into the Great Lakes System, but EPA expects that overall release of BCCs to the environment will be reduced as well, so that these pollutants are not simply transferred to the air or soil.

V. Special Provision for Certain New or Expanded Discharges of BCCs from Municipalities

In proposing today's rule, EPA requested comments on excluding from

the definition of ''new discharge'' any new or expanded discharges of BCCs from POTWs when such discharges are necessary to prevent a public health threat to the community. EPA did not receive any comments directed at this exclusion. The Agency is promulgating this new exclusion because it believes that it is a reasonable, common sense policy that balances competing health risks. As such, new or expanded discharges to which this exclusion applies will be treated as existing discharges of BCCs for purposes of today's rule. See procedure 3.C.2 (2).

VI. Economic Analysis

As described above in Section IV, EPA revised its analysis of the potential costs associated with eliminating and, for existing discharges, phasing out mixing zones for BCCs from the analysis that accompanied the Guidance in 1995. EPA's estimated cost range for the 1995 Guidance, which included the 1995 provision to prohibit mixing zones for BCCs, was $60 million to $380 million per year. EPA estimates, based on its revised analysis, that the portion of that cost range attributable to today's rule ranges from $12 million to $35 million per year. This estimate, and EPA's methodology, are presented in the proposal for today's rulemaking (64 FR 53632, October 4, 1999).

VII. Administrative Requirements

A. Regulatory Planning and Review (Executive Order 12866)

Under Executive Order 12866 (58 FR 51735, October 4, 1993), EPA must determine whether the regulatory action is ''significant'' and therefore subject to Office of Management and Budget (OMB) review and the requirements of the Executive Order. The Order defines ''significant regulatory action'' as one that is likely to result in a rule that may:

(1) Have an annual effect on the economy of $100 million or more or adversely affect in a material way the economy, a sector of the economy, productivity, competition, jobs, the environment, public health or safety, or State, local, or Tribal governments or communities;

(2) Create a serious inconsistency or otherwise interfere with an action taken or planned by another agency;

(3) Materially alter the budgetary impact of entitlements, grants, user fees, or loan programs or the rights and obligations of recipients thereof; or

(4) Raise novel legal or policy issues arising out of legal mandates, the President's priorities, or the principles set forth in the Executive Order.

It has been determined that this rule is not a ''significant regulatory action'' under the terms of Executive Order 12866 and therefore is not subject to OMB review.

B. Regulatory Flexibility Act, as amended by the Small Business Regulatory Enforcement Fairness Act of 1996

The Regulatory Flexibility Act (RFA), as amended by the Small Business Regulatory Enforcement Fairness Act, generally requires an agency to prepare a regulatory flexibility analysis for any rule subject to notice and comment rulemaking requirements under the Administrative Procedure Act or any other statute unless the agency certifies that the rule will not have a significant economic impact on a substantial number of small entities. Small entities include small businesses, small organizations, and small governmental jurisdictions.

For purposes of assessing the impacts of today's rule on small entities, small entity is defined as: (1) A small business based on Small Business Administration size standards; (2) a small governmental jurisdiction that is a government of a city, county, town, school district or special district with a population of less than 50,000; and (3) a small organization that is any not-for-profit enterprise which is independently owned and operated and is not dominant in its field.

EPA prepared a screening analysis to evaluate the financial impact on small entity dischargers that would be subject to the requirements of the rule (i.e., NPDES permit holders that may discharge BCCs). EPA identified 2,329 of these small entities and estimated that more than 96% of them would not be significantly affected. EPA determined that potential impacts represent less than 1% of estimated revenues for 2,290 small entity dischargers under the low cost scenario and 2,244 under the high cost scenario. For small entities that may be affected more, EPA estimates the impact on small municipal dischargers to range from 3% to 5% under the low cost scenario for seven facilities, and from 3% to 14% under the high cost scenario for 43 facilities, with a midpoint of 5%. EPA determined that potential impacts on nonmunicipal dischargers represent less than 1% of estimated revenues.

EPA believes that its screening analysis is conservative (erring on the side of higher costs and greater impacts on small entities than would normally be expected) because Great Lakes States and Tribes have flexibility to authorize mixing zones for small entities under certain technical and economic circumstances and EPA's screening analysis did not take these circumstances into consideration. EPA further believes that as States and Tribes exercise this flexibility for small municipal dischargers that may be affected by this rule the cost impact realized would be near the low end of the range. The screening analysis results were presented in more detail in the proposal for today's final rulemaking (64 FR 53632, October 4, 1999) and the analytical method is described in a document entitled RFA/SBREFA Screening Analysis for the Proposal to Amend the Final Water Quality Guidance for the Great Lakes System to Prohibit Mixing Zones for Bioaccumulative Chemicals of Concern (August 1999).

EPA's analysis was based on the projected impact of the rule on existing small entities; however, the rule may also affect small entities that do not yet exist or that do not discharge BCCs at this time but may choose to do so in the future. EPA does not expect that new small entities discharging to the Great Lakes will experience significant economic impacts because, in EPA's view, it is highly unlikely that any new discharger would discharge BCCs in quantities to be affected by the proposed mixing zone prohibition. First, most BCCs are already banned from use and/or production or are severely restricted in use. Therefore, EPA does not expect them to be present in a new discharger's effluent above criteria levels. Second, for the few remaining BCCs that may be contaminating effluent as a result of household products or products and chemicals used in production, municipalities and commercial and industrial users of those products should be able to use substitutes for these products, rely on cleaner technologies that do not require their use or that do not produce BCCs as a by-product, or employ source controls to reduce releases of BCCs to acceptable levels. These pollution prevention alternatives often are significantly more cost-effective than the end-of-pipe treatment technologies that could be used in their place.

After considering the economic impacts of today's final rule on small entities, I certify that this action will not have a significant economic impact on a substantial number of small entities. This rulemaking amends the 1995 Water Quality Guidance for the Great Lakes System to establish requirements that apply in the first instance to Great Lakes States and Tribes. Today's rule restricts the current discretion of States and Tribes to allow mixing zones when establishing water quality-based effluent limitations for discharges of BCCs to the

Great Lakes System. Great Lakes States and Tribes (or EPA, if a State or Tribe fails to do so) must adopt requirements to ensure that all discharges of BCCs to the Great Lakes System receive limits no greater than the water quality criteria for those BCCs. In the case of existing discharges of BCCs, Great Lakes States and Tribes need not require attainment of such limitations until November 15, 2010. Great Lakes States and Tribes also retain some discretion after that date to authorize mixing zones for existing discharges of BCCs in specified circumstances.

The RFA only requires analysis of the economic impacts of a rule on the small entities that are subject to the requirements of a rule. *United Distribution Cos.* v. *FERC,* 88 F.3d 1105 at 1170 (D.C. Cir. 1996), quoting *Mid-Tex Elec. Co-op* v. *FERC,* 773 F.2d 327, 342 (D.C. Cir. 1985). Today's rule applies to States and Tribes in the Great Lakes System when issuing NPDES permits. It establishes requirements that Great Lakes States and Tribes must adopt and apply to all new and existing discharges of BCCs in the Great Lakes System, including discharges from small entities. The universe of dischargers affected by the rule is certain and Great Lakes States and Tribes have no discretion in implementing the rule with respect to new BCC discharges and only limited authority to modify the requirements with respect to existing BCC discharges. In this sense, the rule imposes requirements on new and existing dischargers in the Great Lakes System.

The requirements in this rulemaking do not become binding requirements on direct dischargers until they are used to derive effluent discharge limitations as conditions in an NPDES permit issued to the discharger. However, effluent limitations based on today's regulations must be included by NPDES permitting authorities as permit conditions when the permitting authority issues or reissues permits to direct dischargers discharging BCCs to the Great Lakes System. Based on this consideration, EPA has concluded that small entities will be subject to the regulation for purposes of the RFA, and EPA has accordingly evaluated the impact of the rule on small entities. Based on its assessment, the Agency concludes that this rulemaking will not have a significant economic impact on a substantial number of small entities for the reasons explained above.

Although this final rule will not have a significant economic impact on a substantial number of small entities, EPA nonetheless has tried to reduce the impact of today's rule on small entities by authorizing an exception, granted solely at the discretion of the State or Tribe on a case-by-case basis, under certain circumstances. EPA believes that small entity dischargers will have an easier time meeting an economic threshold that would qualify them for the exception. Prior to promulgation of the final 1995 Water Quality Guidance, which contained the BCC mixing zone prohibition, EPA received in excess of 23,000 pages of information and data from over 6,000 respondents on its April 16, 1993, proposal. To stay abreast of public expectations for the final Guidance, EPA continued to meet with State, Local, and Tribal government officials, financial officials and co-regulators, the regulated community and environmental interests to listen and openly discuss their concerns. During the post-proposal process for the Guidance, EPA participated in over 40 such meetings with over 1,000 stakeholder representatives including small entities. The comments and issues raised by the various stakeholders were considered in EPA's option selection process and regulatory impact analysis for developing the final Guidance. The open public process resulted in meaningful changes to the final Guidance. Many of the provisions outlined in the proposal were revised for the final Guidance to increase flexibility for State, local, and Tribal implementation, and to reduce the impact of the Guidance on large and small entities. Today's final rule builds on that process.

C. Paperwork Reduction Act

An agency may not conduct or sponsor and a person is not required to respond to a collection of information, unless it displays a currently valid OMB control number under the Paperwork Reduction Act, 44 U.S.C. 3501 *et seq.* The OMB control number for EPA's regulations are listed in 40 CFR part 9 and 48 CFR Chapter 15. Under this rule, the Great Lakes States and Tribes must adopt and submit to EPA provisions that are as protective as this amendment. See 40 CFR 132.1 and 132.5(a). EPA received approval from OMB for that information collection as part of the 1995 rulemaking. OMB renewed its approval in September 30, 1998. The OMB control number is 2040–0180 and is listed in 40 CFR part 9. EPA will renew this information collection prior to the date by which Great Lakes States and Tribes must make submissions consistent with today's rule.

D. Unfunded Mandates Reform Act

Title II of the Unfunded Mandates Reform Act of 1995 (UMRA), Public Law 104–4, establishes requirements for Federal agencies to assess the effects of their regulatory actions on State, local, and Tribal governments and the private sector. Under section 202 of the UMRA, EPA generally must prepare a written statement, including a cost-benefit analysis, for proposed and final rules with ''Federal Mandates'' that may result in expenditures to State, local, and Tribal governments, in the aggregate, or to the private sector, of $100 million or more in any one year. Before EPA promulgates a rule for which a written statement is needed, section 205 of the UMRA generally requires EPA to identify and consider a reasonable number of regulatory alternatives and to adopt the least costly, most cost-effective or least burdensome alternative that achieves the objectives of the rule. The provisions of section 205 do not apply when they are inconsistent with applicable law. Moreover, section 205 allows EPA to adopt an alternative other than the least costly, most cost-effective, or least burdensome alternative if the Administrator publishes with the rule an explanation why that alternative was not adopted.

Before EPA establishes any regulatory requirements that may significantly or uniquely affect small governments, including Tribal governments, it must have developed under section 203 of the UMRA a small government agency plan. The plan must provide for notifying potentially affected small governments, enabling officials of the affected small governments to have meaningful and timely input in the development of EPA regulatory proposals with significant Federal intergovernmental mandates, and informing, educating, and advising small governments on compliance with the regulatory requirements.

As noted above, this rule amends part 132 to prohibit mixing zones for BCCs in the Great Lakes System. EPA has determined that this rule does not contain a Federal mandate that may result in expenditures of $100 million or more for State, local, and Tribal governments, in the aggregate, or the private sector, in any one year. The total annual impact of this rule on State, local, and Tribal governments and the private sector is not expected to exceed $12 to $35 million. Thus, today's rule to amend part 132 to prohibit mixing zones for BCCs in the Great Lakes System is not subject to the requirements of sections 202 and 205 of the UMRA.

EPA has determined that this rule contains no regulatory requirements that might significantly or uniquely affect small governments. As described above,

EPA does not expect that small governments, including Tribal governments with responsibility for implementing this rule, and small governments operating POTWs discharging to the Great Lakes, will experience significant economic impacts because most BCCs are already banned from use or are severely restricted in use. In those rare instances where the few remaining BCCs (i.e., BCCs that are not already banned or severely restricted) are found contaminating effluent to unacceptable levels as a result of household products or products and chemicals used in production, municipalities and commercial and industrial users of those products should be able to use substitutes for these products, rely on cleaner technologies that do not require their use or that do not produce BCCs as a by-product, or employ source controls to reduce releases of BCCs to acceptable levels. In addition, for existing discharges, there is some flexibility and discretion in how the rule is to be implemented by States and Tribes within the NPDES permit program. Thus, today's rule is not subject to the requirements of section 203 of UMRA.

E. Executive Order on Federalism

Executive Order 13132, entitled ''Federalism'' (64 FR 43255, August 10, 1999), requires EPA to develop an accountable process to ensure ''meaningful and timely input by State and local officials in the development of regulatory policies that have federalism implications.'' ''Policies that have federalism implications'' is defined in the Executive Order to include regulations that have ''substantial direct effects on the States, on the relationship between the national government and the States, or on the distribution of power and responsibilities among the various levels of government.''

This final rule does not have federalism implications. It will not have substantial direct effects on the States, on the relationship between the national government and the States, or on the distribution of power and responsibilities among the various levels of government, as specified in Executive Order 13132. Today's rule simply requires the Great Lakes States to add one discrete provision to the regulations and policies they were already required to adopt pursuant to the 1995 Guidance. EPA's estimated cost range for the 1995 Guidance, which included the 1995 provision to prohibit mixing zones for BCCs, was $60 million to $380 million per year. EPA estimates that only a small portion of that cost range, $12 million to $35 million per year, is attributable to today's rule. Similarly, this rule will not have a substantial direct effect upon the distribution of power and responsibilities among the various levels of government because the States retain primary responsibility for administering their NPDES permit programs, through which this rule is implemented. The rulemaking authorizes EPA to promulgate these mixing zone provisions only if an authorized State has failed to act. Accordingly, these provisions will not have a substantial direct effect on States or on intergovernmental relationships or responsibilities. Thus, the requirements of section 6 of the Executive Order do not apply to this final rule.

Although section 6 of Executive Order 13132 does not apply to this rule, EPA extensively involved State, local, and Tribal government representatives in the development of this amendment, notably during the process of developing the 1995 Guidance, which contained the original version of today's rule. The process used to develop the Guidance marked the first time that EPA had developed a major rulemaking effort in the water quality standards program through a regional public forum. The public process, which lasted over a seven-year period and involved Great Lakes States, EPA, and other Federal agencies in open dialogue with citizens, Tribal and local governments, and industry in the Great Lakes Basin, is described further in the preamble to the Guidance. See 60 FR 15383 (March 23, 1995). As described above, today's action by EPA reinstates a provision nearly identical to the provision in the 1995 Guidance that was vacated by the Court in *AISI*. It thus reflects the State, local, and Tribal government input EPA received during the 1995 Guidance rulemaking.

F. Executive Order 13084: Consultation and Coordination with Indian Tribal Governments

Under Executive Order 13084, EPA may not issue a regulation that is not required by statute, that significantly or uniquely affects the communities of Indian tribal governments, and that imposes substantial direct compliance costs on those communities, unless the Federal government provides the funds necessary to pay the direct compliance costs incurred by the tribal governments or unless EPA consults with those governments. If EPA complies by consulting, Executive Order 13084 requires EPA to provide to the Office of Management and Budget, in a separately identified section of the preamble to the rule, a description of the extent of EPA's prior consultation with representatives of affected tribal governments, a summary of the nature of their concerns, and a statement supporting the need to issue the regulation. In addition, Executive Order 13084 requires EPA to develop an effective process permitting elected officials and other representatives of Indian tribal governments ''to provide meaningful and timely input in the development of regulatory policies on matters that significantly or uniquely affect their communities.''

Today's rule does not significantly or uniquely affect the communities of Indian Tribal governments or impose substantial direct compliance costs on them. See section VII. D above for more discussion. Therefore, the requirements of section 3(b) of Executive Order 13084 do not apply to this rule. Nonetheless, EPA has extensively involved Great Lakes State, local, and Tribal governments in the development of this amendment, notably during the process of developing the 1995 Guidance, which contained the original version of this rule. Today's action by EPA proposes to reinstate a provision nearly identical to the provision in the 1995 Guidance that was vacated by the Court in *AISI*. It thus reflects the State, local, and Tribal government input EPA received during the 1995 Guidance rulemaking.

G. Executive Order 13045: Protection of Children From Environmental Health Risks and Safety Risks

Executive Order 13045: ''Protection of Children from Environmental Health Risks and Safety Risks'' (62 FR 19885, April 23, 1997) applies to any rule that: (1) is determined to be ''economically significant'' as defined under Executive Order 12866, and (2) concerns an environmental health or safety risk that EPA has reason to believe may have a disproportionate effect on children. If the regulatory action meets both criteria, the Agency must evaluate the environmental health or safety effects of the planned rule on children, and explain why the planned regulation is preferable to other potentially effective and reasonably feasible alternatives considered by the Agency.

This rule is not subject to the Executive Order because it is not economically significant as defined in Executive Order 12866. As noted earlier, however, children may be at a greater risk to BCCs than adults. If they are at greater risk, then they will benefit the most from this rule to prohibit mixing zones for BCCs in the Great Lakes System.

H. Endangered Species Act

Section 7 of the Endangered Species Act (ESA) requires Federal agencies, in consultation with the U.S. Fish and Wildlife Service (FWS) and National Marine Fisheries Service (NMFS), to ensure their actions are not likely to jeopardize the continued existence of any listed species or result in the destruction or adverse modification of habitat of such species that have been designated as ''critical.'' Consultation is designed to assist Federal agencies in complying with the requirements of section 7 by supplying a process within which FWS and NMFS provide such agencies with advice on whether an action complies with the substantive requirements of ESA.

In accordance with these requirements, EPA completed consultation with the FWS on the 1995 Guidance, and the FWS issued a biological opinion concluding that the Guidance was not likely to jeopardize the continued existence of listed species or result in the destruction or adverse modification of species' critical habitat. As explained above, today's rule essentially reinstates, with some clarification, the BCC mixing zone provisions of the 1995 Guidance. Since the substance of today's rule has already been the subject of section 7 consultation, the effects of today's rule have been addressed by the Services' prior biological opinion.

I. National Technology Transfer and Advancement Act

As noted in the proposed rule, Section 12(d) of the National Technology Transfer and Advancement Act of 1995 (NTTAA), Public Law 104–113, section 12(d) (15 U.S.C. 272 note) directs EPA to use voluntary consensus standards in its regulatory activities unless to do so would be inconsistent with applicable law or otherwise impractical. Voluntary consensus standards are technical standards (e.g., materials specifications, test methods, sampling procedures, and business practices) that are developed or adopted by voluntary consensus standards bodies. The NTTAA directs EPA to provide Congress, through the Office of Management and Budget, explanations when the Agency decides not to use available and applicable voluntary consensus standards.

Today's rule does not involve technical standards; therefore, EPA did not consider using any voluntary consensus standards. EPA received no comments on this aspect of the rulemaking and no commenter identified any potentially applicable voluntary consensus standards for use in this regulation.

J. Submission to Congress and the General Accounting Office

The Congressional Review Act, 5 U.S.C. 801 *et seq.*, as added by the Small Business Regulatory Enforcement Fairness Act of 1996, generally provides that before a rule may take effect, the agency promulgating the rule must submit a rule report, which includes a copy of the rule, to each House of the Congress and to the Comptroller General of the United States. EPA will submit a report containing this rule and other required information to the U.S. Senate, the U.S. House of Representatives, and the Comptroller General of the United States prior to publication of the rule in the **Federal Register**. A major rule cannot take effect until 60 days after it is published in the **Federal Register**. This rule is not a major rule as defined by 5 U.S.C. 804(2). This rule will be effective December 13, 2000.

VIII. Supporting Documents

All documents that are referenced in this preamble are available for inspection and photocopying in the docket of the 1995 Guidance and the docket of this rulemaking at the address listed at the beginning of this preamble. A reasonable fee will be charged for photocopies.

EPA is also making a number of documents available in electronic format at no incremental cost to users of the Internet (http://www.epa.gov/ost/GLI). These documents include the contents of this **Federal Register** document and several other supporting documents and materials.

IX. References

Amyot, M., J.D. Lalonde, L. Poissant, and D.R.S. Lean. 1999. Mercury in Lake Ontario and the St. Lawrence River. Great Lakes Research Review 4(2): 1–4.

DRI/McGraw-Hill. 1995. Great Lakes Water Quality Initiative, Cost Effectiveness Update. June.

Elliot, J.E., R.J. Norstrom, A. Lorenzen, L.E. Hart, H. Philibert, S.W. Kennedy, J.J. Stegeman, G.D. Bllward, and K.M. Cheng. 1996. Biological effects of polychlorinated dibenzo-p-dioxins, dibenzofurans, and biphenyls in bald eagle (*Haliaeetus leucocephalus*) chicks. *Environmental Toxicology and Chemistry* 15: 782–93.

Mason, R.T., and K.A. Sullivan. 1997. Mercury in Lake Michigan. *Environmental Science and Technology* 31: 942–47.

Sweeney, B.W., D.H. Funk, and L.J. Standley. 1993. Use of the stream mayfly *Cloeon triangulifer* as a bioassay organism: life history response and body burden following exposure to technical chlordane. *Environmental Toxicology and Chemistry* 12: 115–25.

U.S. EPA. 1995. Regulatory Impact Analysis for the Final Great Lakes Water Quality Guidance. U.S. Environmental Protection Agency, Washington, D.C.

U.S. EPA. 1997. Guidance for Assessing Chemical Data for Use in Fish Advisories. Volume 2. Risk Assessment and Fish Consumption Limits. EPA 823-B–97–009. U.S. Environmental Protection Agency, Washington, D.C.

U.S. EPA. 1999. Overview of Pollution Prevention Approaches at POTWs. Draft. Office of Science and Technology. U.S. Environmental Protection Agency, Washington, D.C.

List of Subjects in 40 CFR Part 132

Environmental protection, administrative practice and procedure, Great Lakes, Indian lands, Intergovernmental relations, Reporting and recordkeeping requirements, Water pollution control.

Dated: November 2, 2000.

Carol M. Browner,

Administrator.

For the reasons set out in the preamble, Title 40, chapter I, part 132 of the Code of Federal Regulations is amended as follows:

PART 132—WATER QUALITY GUIDANCE FOR THE GREAT LAKES SYSTEM

1. The authority citation for part 132 continues to read as follows:

Authority: 33 U.S.C. 1251 *et seq.*

2. Section 132.5 is amended by revising paragraphs (a) and (c) to read as follows:

§ 132.5 Procedures for adoption and EPA review.

(a) Except as provided in paragraph (c) of this section, the Great Lakes States and Tribes shall adopt and submit for EPA review and approval the criteria, methodologies, policies, and procedures developed pursuant to this part no later than September 23, 1996. With respect to procedure 3.C of appendix F of this part, each Great Lakes State and Tribe shall make its submission to EPA no later than May 13, 2002.

* * * * *

(c) The Regional Administrator may extend the deadline for the submission required in paragraph (a) of this section if the Regional Administrator believes that the submission will be consistent with the requirements of this part and can be reviewed and approved pursuant to this section no later than March 23, 1997, or, for procedure 3.C of appendix F of this part, no later than November 13, 2002.

* * * * *

3. Appendix F of part 132 is amended by adding procedure 3.C to read as follows:

Appendix F of Part 132—Great Lakes Water Quality Initiative Implementation Procedures

* * * * *

Procedure 3: * * *

C. *Mixing Zones for Bioaccumulative Chemicals of Concern (BCCs).* The following requirements shall be applied in establishing TMDLs, WLAs in the absence of TMDLs, and preliminary WLAs for purposes of determining the need for WQBELs under procedure 5 of appendix F, for BCCs:

1. There shall be no mixing zones available for new discharges of BCCs to the Great Lakes System. WLAs established through TMDLs, WLAs in the absence of TMDLs, and preliminary WLAs for purposes of determining the need for WQBELs for new discharges of BCCs shall be set no higher than the most stringent applicable water quality criteria or values for the BCCs in question. This prohibition takes effect for a Great Lakes State or Tribe on the date EPA approves the State's or Tribe's submission of such prohibition or publishes a notice under 40 CFR 132.5(f) identifying that prohibition as applying to discharges within the State or Federal Tribal reservation.

2. For purposes of section C of procedure 3 of appendix F, new discharges are defined as: (1) A ''discharge of pollutants'' (as defined in 40 CFR 122.2) to the Great Lakes System from a building, structure, facility, or installation, the construction of which commences after the date the prohibition in section C.1 takes effect in that State or Tribe; (2) a new discharge from an existing Great Lakes discharger that commences after the date the prohibition in section C.1 takes effect in that State or Tribe; or (3) an expanded discharge from an existing Great Lakes discharger that commences after the date the prohibition in section C.1 takes effect in that State or Tribe, except for those expanded discharges resulting from changes in loadings of any BCC within the existing capacity and processes (*e.g.,* normal operational variability, changes in intake water pollutants, increasing the production hours of the facility or adding additional shifts, or increasing the rate of production), and that are covered by the existing applicable control document. Not included within the definition of ''new discharge'' are new or expanded discharges of BCCs from a publicly owned treatment works (POTW as defined at 40 CFR 122.2) when such discharges are necessary to prevent a public health threat to the community (*e.g.,* a situation where a community with failing septic systems is connected to a POTW to avert a potential public health threat from these failing systems). These and all other discharges of BCCs are defined as existing discharges.

3. Up until November 15, 2010, mixing zones for BCCs may be allowed for existing discharges to the Great Lakes System pursuant to the procedures specified in sections D and E of this procedure.

4. Except as provided in sections C.5 and C.6 of this procedure, permits issued on or after this provision takes effect in a Great Lakes State or Tribe shall not authorize mixing zones for existing discharges of BCCs to the Great Lakes System after November 15, 2010. After November 15, 2010, WLAs established through TMDLs, WLAs established in the absence of TMDLs, and preliminary WLAs for purposes of determining the need for WQBELs under procedure 5 of appendix F for existing discharges of BCCs to the Great Lakes System shall be equal to the most stringent applicable water quality criteria or values for the BCCs in question.

5. *Exception for Water Conservation.* Great Lakes States and Tribes may grant mixing zones for any existing discharge of BCCs to the Great Lakes System beyond the date specified in section C.4 of this procedure where it can be demonstrated, on a case-by-case basis, that failure to grant a mixing zone would preclude water conservation measures that would lead to overall load reductions in BCCs, even though higher concentrations of BCCs occur in the effluent. Such mixing zones must also be consistent with sections D and E of this procedure.

6. *Exception for Technical and Economic Considerations.* Great Lakes States and Tribes may grant mixing zones beyond the date specified in section C.4 of this procedure for any existing discharge of a BCC to the Great Lakes System upon the request of a discharger, subject to sections C.6.a through C.6.c below.

a. The State or Tribe must determine that:

i. The discharger is in compliance with and will continue to implement, for the BCC in question, all applicable requirements of Clean Water Act sections 118, 301, 302, 303, 304, 306, 307, 401, and 402, including existing National Pollutant Discharge Elimination System (NPDES) water-quality based effluent limitations; and

ii. The discharger has reduced and will continue to reduce the loading of the BCC for which a mixing zone is requested to the maximum extent possible, such that any additional controls or pollution prevention measures to reduce or ultimately eliminate the BCC discharge would result in unreasonable economic effects on the discharger or the affected community because the controls or measures are not feasible or cost-effective.

b. Any mixing zone established pursuant to this section shall:

i. Not result in any less stringent limitations than those existing prior to November 13, 2000;

ii. Be no larger than necessary to account for the technical constraints and economic effects identified pursuant to paragraph C.6.a.ii above;

iii. Meet all applicable acute and chronic aquatic life, wildlife and human health criteria and values within and at the edge of the mixing zone or be consistent with the applicable TMDL or assessment and remediation plan authorized under procedure 3.A.

iv. Be accompanied, as appropriate, by a permit condition requiring the discharger to implement an ambient monitoring plan to ensure compliance with water quality standards and consistency with any applicable TMDL or such other strategy consistent with Section A of this procedure, including the evaluation of alternative means for reducing the BCC from other sources in the watershed; and

v. Be limited to one permit term unless the permitting authority makes a new determination in accordance with this section for each successive permit application in which a mixing zone for the BCC is sought.

c. For each draft NPDES permit that would allow a mixing zone for one or more BCCs after November 15, 2010, the fact sheet or statement of basis for the draft permit that is required to be made available through public notice under 40 CFR 124.6(e) shall:

i. Specify the mixing provisions used in calculating the permit limits; and

ii. Identify each BCC for which a mixing zone is proposed.

7. Any mixing zone authorized under sections C.3, C.5 or C.6 must be consistent with sections D and E of this procedure, as applicable.

* * * * *

[FR Doc. 00–28709 Filed 11–9–00; 8:45 am]

BILLING CODE 6560–50–P

FEDERAL COMMUNICATIONS COMMISSION

47 CFR Part 63

[IB Docket No. 97–142, FCC 00–339]

Rules and Policies on Foreign Participation in the U.S. Telecommunications Market

AGENCY: Federal Communications Commission.

ACTION: Final rule; announcement of effective date.

SUMMARY: This document announces the effective date of rules. The Commission amended its rules regarding the prior notifications of foreign affiliations, and the rules contained information collection requirements. These rules become effective on November 9, 2000.

EFFECTIVE DATE: The amendments to 47 CFR 63.11 published at 65 FR 60113, October 10, 2000, become effective on November 9, 2000.

FOR FURTHER INFORMATION CONTACT: Peggy Reitzel, Telecommunications Division, International Bureau, (202) 418–1499.

SUPPLEMENTARY INFORMATION: On September 12, 2000, the Commission adopted an order clarifying and revising rules regarding prior notifications of foreign affiliations, a summary of which was published in the **Federal Register**. See 65 FR 60113, October 10, 2000. Section 63.11 of the rules contained

information collection requirements. We stated that § 63.11 contained ''information collections that have not been approved by the Office of Management and Budget (OMB). The Commission will publish a document in the **Federal Register** announcing the effective date of that section.'' The information collections were approved by OMB on October 23, 2000. See OMB No. 3060–0686. This publication satisfies our statement that the Commission would publish a document announcing the effective date of the rules.

List of Subjects in 47 CFR Part 63

Communications common carriers, Reporting and recordkeeping requirements.

Federal Communications Commission.

Magalie Roman Salas,

Secretary.

[FR Doc. 00–28887 Filed 11–9–00; 8:45 am]

BILLING CODE 6712–01–P

FEDERAL COMMUNICATIONS COMMISSION

47 CFR Part 73

[DA 00–2424; MM Docket No. 00–88; RM–9871]

Radio Broadcasting Services; Dillsboro and Rosman, NC

AGENCY: Federal Communications Commission.

ACTION: Final rule.

SUMMARY: The Commission, at the request of Sutton Radiocasting Corporation, allots Channel 237A to Dillsboro, NC, as the community's first local aural service. *See* 65 FR 34997, June 1, 2000. Channel 237A can be allotted to Dillsboro in compliance with the Commission's minimum distance separation requirements with a site restriction of 14.5 kilometers (9 miles) southeast, at coordinates 35–15–56 NL; 83–09–16 WL, to avoid a short-spacing to Stations WIKQ, Channel 235C, Greeneville, TN, and WYFC, Channel 237A, Clinton, TN. The counterproposal of Chase Broadcasting, Inc. to allot Channel 237A to Rosman, NC, as its first local aural service, is dismissed. A filing window for Channel 237A at Dillsboro will not be opened at this time. Instead, the issue of opening a filing window for this channel will be addressed by the Commission in a subsequent order.

DATES: Effective December 11, 2000.

FOR FURTHER INFORMATION CONTACT: Leslie K. Shapiro, Mass Media Bureau, (202) 418–2180.

SUPPLEMENTARY INFORMATION: This is a synopsis of the Commission's Report and Order, MM Docket No. 00–88, adopted October 10, 2000, and released October 27, 2000. The full text of this Commission decision is available for inspection and copying during normal business hours in the FCC Reference Center (Room 239), 445 12th Street, SW., Washington, DC. The complete text of this decision may also be purchased from the Commission's copy contractor, International Transcription Services, Inc., (202) 857–3800, 1231 20th Street, NW., Washington, DC 20036.

List of Subjects in 47 CFR Part 73

Radio broadcasting.

Part 73 of title 47 of the Code of Federal Regulations is amended as follows:

47 CFR PART 73—RADIO BROADCAST SERVICES

1. The authority citation for Part 73 continues to read as follows:

Authority: 47 U.S.C. 154, 303, 334 and 336.

§ 73.202 [Amended]

2. Section 73.202(b), the Table of FM Allotments under North Carolina, is amended by adding Dillsboro, Channel 237A.

Federal Communications Commission.

John A. Karousos,

Chief, Allocations Branch, Policy and Rules Division, Mass Media Bureau.

[FR Doc. 00–28889 Filed 11–9–00; 8:45 am]

BILLING CODE 6712–01–U

FEDERAL COMMUNICATIONS COMMISSION

47 CFR Part 73

[DA 00–2429; MM Docket No. 98–74; RM–9269, RM–9736]

Radio Broadcasting Services; Eatonville, Wenatchee, Moses Lake, Spokane, and Newport, WA

AGENCY: Federal Communications Commission.

ACTION: Final rule.

SUMMARY: The Commission, at the request of joint filers Barbara J. Geesman, licensee of Station KKBY–FM, Eatonville, Washington, Morris Communications, successor to Pioneer Broadcasting Company, Inc, licensee of Stations KKRV and KWIQ, Upper Columbia Media Association, licensee of Station KEEH, Spokane, Washington, James and Helen Stargel, licensee of Station KMJY, Newport, Washington, and Jeffrey Aaron Bruton, makes the following amendments to the FM Table of Allotments. (1) Channel 284C2 is substituted for Channel 285C2 at Wenatchee, Washington, and Station KKRV's license is modified at its present site 10.2 kilometers (6.3 miles) northeast of the community at coordinates 47–28–44 NL and 120–12–49 WL. (2) Channel 285C3 is substituted for Channel 285A at Eatonville, Washington, and Station KFNK's license is modified at its present site 6.4 kilometers (4 miles) southeast of the community at coordinates 46–50–19 NL and 122–11–53 WL. (3) Channel 262C is substituted for Channel 262C1 at Moses Lake, Washington, and Station KWIQ's license is modified at its present site 42.1 kilometers (26.2 miles) north of the community at coordinates 47–29–20 NL and 119–26–45 WL. (4) Channel 285C2 is substituted for Channel 284A at Spokane, Washington, and Station KEEH's license is modified at its present site 13.1 kilometers (8.2 miles) southeast of the community at coordinates 47–34–45 NL and 117–17–48 WL. (5) Channel 283C3 is substituted for Channel 285A at Newport, Washington, and Station KMJY's license is modified at its present site 2.2 kilometers (1.4 miles) southeast of the community at coordinates 48–09–37 NL and 117–01–49 WL. *See* Supplementary Information.

DATES: Effective December 11, 2000.

FOR FURTHER INFORMATION CONTACT: Victoria M. McCauley, Mass Media Bureau, (202) 418–2180.

SUPPLEMENTARY INFORMATION: This is a synopsis of the Commission's Report and Order, MM Docket No. 98–74, adopted October 18, 2000, and released October 27, 2000. The full text of this Commission decision is available for inspection and copying during normal business hours in the FCC Reference Center (Room 239), 445 12th Street, SW., Washington, DC. The complete text of this decision may also be purchased from the Commission's copy contractor, International Transcription Services, Inc., (202) 857–3800, 1231 20th Street, NW., Washington, DC 20036.

Since Eatonville, Wenatchee, Moses Lake, Spokane and Newport are within 320 kilometers (200 miles) of the U.S.-Canadian border, we have requested concurrence of the Canadian government for the allotments at those communities. Concurrence has been received for Eatonville, Moses Lake, Spokane and Newport. Concurrence for the allotment at Wenatchee has been requested but not yet received. Any construction permit for Channel 284C2 at Wenatchee that is granted prior to the

receipt of formal concurrence of the Canadian Government will include the following condition: ''Operation with the facilities specified herein is subject to modification, suspension, or termination without right to hearing if specifically objected to by Industry Canada. This condition will be removed once formal approval for the allotment is received from Industry Canada.''

List of Subjects in 47 CFR Part 73

Radio broadcasting.

Part 73 of title 47 of the Code of Federal Regulations is amended as follows:

47 CFR PART 73—RADIO BROADCAST SERVICES

1. The authority citation for part 73 continues to read as follows:

Authority: 47 U.S.C. 154, 303, 334 and 336.

§ 73.202 [Amended]

2. Section 73.202(b) the FM Table of Allotments under Washington is amended by removing Channel 285C2 at Wenatchee and adding 284C2, removing Channel 285A at Eatonville and adding 285C3, removing Channel 262C1 at Moses Lake and adding Channel 262C, removing Channel 284A at Spokane and adding Channel 285C2 and removing Channel 285A at Newport and adding Channel 283C3.

Federal Communications Commission.

John A. Karousos,

Chief, Allocations Branch, Policy and Rules Division, Mass Media Bureau.

[FR Doc. 00–28888 Filed 11–9–00; 8:45 am]

BILLING CODE 6712–01–P

FEDERAL COMMUNICATIONS COMMISSION

47 CFR Part 73

[DA 00–2360; MM Docket No. 00–82; RM–9841]

Radio Broadcasting Services; McCook, NE

AGENCY: Federal Communications Commission.

ACTION: Final rule.

SUMMARY: The Commission, at the request of McCook Radio Group, LLC, allots Channel 280C2 to McCook, NE, as the community's fifth local commercial FM service. *See* 65 FR 34997, June 1, 2000. Channel 280C2 can be allotted to McCook in compliance with the Commission's minimum distance separation requirements without the imposition of a site restriction, at coordinates 40–12–18 NL; 100–37–36 WL. The Commission also editorially amends the FM Table of Allotments to reflect the grant of Station KRKU's one-step upgrade application to operate on Channel 253C1 in lieu of Channel 253C2 at McCook. A filing window for Channel 280C2 at McCook will not be opened at this time. Instead, the issue of opening a filing window for this channel will be addressed by the Commission in a subsequent order.

DATES: Effective December 11, 2000.

FOR FURTHER INFORMATION CONTACT: Leslie K. Shapiro, Mass Media Bureau, (202) 418–2180.

SUPPLEMENTARY INFORMATION: This is a synopsis of the Commission's Report and Order, MM Docket No. 00–82, adopted October 11, 2000, and released October 20, 2000. The full text of this Commission decision is available for inspection and copying during normal business hours in the FCC Reference Center (Room 239), 445 12th Street, SW, Washington, DC. The complete text of this decision may also be purchased from the Commission's copy contractor, International Transcription Services, Inc., (202) 857–3800, 1231 20th Street, NW, Washington, DC 20036.

List of Subjects in 47 CFR Part 73

Radio broadcasting.

Part 73 of Title 47 of the Code of Federal Regulations is amended as follows:

47 CFR PART 73—RADIO BROADCAST SERVICES

1. The authority citation for part 73 continues to read as follows:

Authority: 47 U.S.C. 154, 303, 334 and 336.

§ 73.202 [Amended]

2. Section 73.202(b), the Table of FM Allotments under Nebraska, is amended by removing Channel 253C2 and adding Channel 253C1 and Channel 280C2 at McCook.

Federal Communications Commission.

John A. Karousos,

Chief, Allocations Branch, Policy and Rules Division, Mass Media Bureau.

[FR Doc. 00–28885 Filed 11–9–00; 8:45 am]

BILLING CODE 6712–01–U

FEDERAL COMMUNICATIONS COMMISSION

47 CFR Part 73

[DA 00–2363; MM Docket No. 00–92; RM–9857]

Radio Broadcasting Services; Livingston and Dos Palos, CA

AGENCY: Federal Communications Commission.

ACTION: Final rule.

SUMMARY: In response to a proposal filed on behalf of All American Broadcasting, Inc., the Commission reallots Channel 240A from Livingston to Dos Palos, California, as that community's first local aural transmission service, and modifies the license for Station KNTO accordingly, pursuant to the provisions of Section 1.420(i) of the Commission's Rules. *See* 65 FR 36652, June 9, 2000. Coordinates used for Channel 240A at Dos Palos are 37–04–03 NL and 120–44–52 WL.

DATES: Effective December 11, 2000.

FOR FURTHER INFORMATION CONTACT: Nancy Joyner, Mass Media Bureau, (202) 418–2180.

SUPPLEMENTARY INFORMATION: This is a synopsis of the Commission's Report and Order, MM Docket No. 00–92, adopted October 11, 2000, and released October 20, 2000. The full text of this Commission decision is available for inspection and copying during normal business hours in the FCC's Reference Information Center (Room CY–A257), 445 Twelfth Street, SW., Washington, DC. The complete text of this decision may also be purchased from the Commission's copy contractor, International Transcription Service, Inc., 1231 20th Street, NW., Washington, DC 20036, (202) 857–3800.

List of Subjects in 47 CFR Part 73

Radio broadcasting.

Part 73 of title 47 of the Code of Federal Regulations is amended as follows:

47 CFR PART 73—[AMENDED]

1. The authority citation for part 73 continues to read as follows:

Authority: 47 U.S.C. 154, 303, 334, 336.

§ 73.202 [Amended]

2. Section 73.202(b), the Table of FM Allotments under California, is amended by adding Dos Palos, Channel 240A.

3. Section 73.202(b), the Table of FM Allotments under California, is amended by removing Livingston, Channel 240A.

Federal Communications Commission.

John A. Karousos,

Chief, Allocations Branch, Policy and Rules Division, Mass Media Bureau.

[FR Doc. 00–28882 Filed 11–9–00; 8:45 am]

BILLING CODE 6712–01–P

FEDERAL COMMUNICATIONS COMMISSION

47 CFR Part 73

[DA 00–2362; MM Docket No. 00–83; RM–9849]

Radio Broadcasting Services; Butte Falls, OR

AGENCY: Federal Communications Commission.

ACTION: Final rule.

SUMMARY: The Commission, at the request of Butte Falls Radio, allots Channel 225A to Butte Falls, OR, as the community's first local aural service. *See* 65 FR 34997, June 1, 2000. Channel 225A is allotted instead of the originally proposed Channel 255A in order to avoid a short-spacing to the proposed allotment of Channel 255A at Hornbrook, CA, in MM Docket No. 00–73. Channel 225A can be allotted to Butte Falls in compliance with the Commission's minimum distance separation requirements with a site restriction of 3.4 kilometers (2.1 miles) northwest, at coordinates 42–33–33 NL; 122–36–13 WL, to avoid a short-spacing to Stations KLAD–FM, Channel 223C, Klamath Falls, OR, and KKNU, Channel 226C, Springfield, Oregon. A filing window for Channel 225A at Butte Falls will not be opened at this time. Instead, the issue of opening a filing window for this channel will be addressed by the Commission in a subsequent order.

DATES: Effective December 11, 2000.

FOR FURTHER INFORMATION CONTACT: Leslie K. Shapiro, Mass Media Bureau, (202) 418–2180.

SUPPLEMENTARY INFORMATION: This is a synopsis of the Commission's Report and Order, MM Docket No. 00–83, adopted October 11, 2000, and released October 20, 2000. The full text of this Commission decision is available for inspection and copying during normal business hours in the FCC Reference Center (Room 239), 445 12th Street, SW., Washington, DC. The complete text of this decision may also be purchased from the Commission's copy contractor, International Transcription Services, Inc., (202) 857–3800, 1231 20th Street, NW., Washington, DC 20036.

List of Subjects in 47 CFR Part 73

Radio broadcasting.

Part 73 of title 47 of the Code of Federal Regulations is amended as follows:

47 CFR PART 73—RADIO BROADCAST SERVICES

1. The authority citation for part 73 continues to read as follows:

Authority: 47 U.S.C. 154, 303, 334. 336.

§ 73.202 [Amended]

2. Section 73.202(b), the Table of FM Allotments under Oregon, is amended by adding Butte Falls, Channel 225A.

Federal Communications Commission.

John A. Karousos,

Chief, Allocations Branch, Policy and Rules Division, Mass Media Bureau.

[FR Doc. 00–28881 Filed 11–9–00; 8:45 am]

BILLING CODE 6712–01–P

FEDERAL COMMUNICATIONS COMMISSION

47 CFR Part 73

[DA 00–2361; MM Docket No. 00–66; RM–9842]

Radio Broadcasting Services; Des Moines, NM

AGENCY: Federal Communications Commission.

ACTION: Final rule.

SUMMARY: The Commission, at the request of Willison H. Gormly d/b/a/ Sierra Grande Broadcasting, allots Channel 287C to Des Moines, NM, as the community's first local aural service. *See* 65 FR 25697. May 3, 2000. Channel 287C can be allotted to Des Moines in compliance with the Commission's minimum distance separation requirements without the imposition of a site restriction, at coordinates 36–45–48 NL; 103–50–12 WL. A filing window for Channel 287C at Des Moines will not be opened at this time. Instead, the issue of opening a filing window for this channel will be addressed by the Commission in a subsequent order.

DATES: Effective December 11, 2000.

FOR FURTHER INFORMATION CONTACT: Leslie K. Shapiro, Mass Media Bureau, (202) 418–2180.

SUPPLEMENTARY INFORMATION: This is a synopsis of the Commission's Report and Order, MM Docket No. 00–66, adopted October 11, 2000, and released October 20, 2000. The full text of this Commission decision is available for inspection and copying during normal business hours in the FCC Reference Center (Room 239), 445 12th Street, SW, Washington, DC. The complete text of this decision may also be purchased from the Commission's copy contractor, International Transcription Services, Inc., (202) 857–3800, 1231 20th Street, NW, Washington, DC 20036.

List of Subjects in 47 CFR Part 73

Radio broadcasting.

Part 73 of title 47 of the Code of Federal Regulations is amended as follows:

47 CFR PART 73—RADIO BROADCAST SERVICES

1. The authority citation for part 73 continues to read as follows:

Authority: 47 U.S.C. 154, 303, 334. 336.

§ 73.202 [Amended]

2. Section 73.202(b), the Table of FM Allotments under New Mexico, is amended by adding Des Moines, Channel 287C.

Federal Communications Commission.

John A. Karousos,

Chief, Allocations Branch, Policy and Rules Division, Mass Media Bureau.

[FR Doc. 00–28880 Filed 11–9–00; 8:45 am]

BILLING CODE 6712–01–P

FEDERAL COMMUNICATIONS COMMISSION

47 CFR Part 73

[DA 00–2426; MM Docket No. 99–312; RM–9735]

Radio Broadcasting Services; Mill Hall, Jersey Shore, and Pleasant Gap, PA

AGENCY: Federal Communications Commission.

ACTION: Final rule.

SUMMARY: The Commission, at the request of Forever Broadcasting, LLC., reallots Channel 249A from Jersey Shore to Mill Hall, Pennsylvania, and modifies Station WVRT(FM)'s license accordingly. We also reallot Channel 254A from Mill Hall to Pleasant Gap, Pennsylvania, and modify Station WZRZ(FM)'s license accordingly. *See* 64 FR 59728, November 3, 1999. Channel 249A can be reallotted to Mill Hall in compliance with the Commission's minimum distance separation requirements at Station WVRT(FM)'s requested site. The coordinates for Channel 249A at Mill Hall are 41–08–03 North Latitude and 77–28–09 West Longitude. Additionally, Channel 254A

can be reallotted to Pleasant Gap in compliance with the Commission's minimum distance separation requirements at Station WZRZ(FM)'s requested site. The coordinates for Channel 254A at Pleasant Gap are 40–55–58 North Latitude and 77–45–40 West Longitude.

DATES: Effective December 11, 2000.

FOR FURTHER INFORMATION CONTACT: Sharon P. McDonald, Mass Media Bureau, (202) 418–2180.

SUPPLEMENTARY INFORMATION: This is a synopsis of the Commission's Report and Order, MM Docket No. 99–312, adopted October 18, 2000, and released October 27, 2000. The full text of this Commission decision is available for inspection and copying during normal business hours in the FCC Reference Information Center (Room CY–A257), 445 12th Street, SW, Washington, DC. The complete text of this decision may also be purchased from the Commission's copy contractors, International Transcription Service, Inc., (202) 857–3800, 1231 20th Street, NW., Washington, DC 20036.

List of Subjects in 47 CFR Part 73

Radio broadcasting.

Part 73 of title 47 of the Code of Federal Regulations is amended as follows:

47 CFR PART 73—RADIO BROADCAST SERVICES

1. The authority citation for part 73 continues to read as follows:

Authority: 47 U.S.C. 154, 303, 334 and 336.

§ 73.202 [Amended]

2. Section 73.202(b), the Table of FM Allotments under Pennsylvania, is amended by adding Channel 249A and removing Channel 254A at Mill Hall; and adding Pleasant Gap, Channel 254A; and removing Channel 249A at Jersey Shore.

Federal Communications Commission.

John A. Karousos,

Chief, Allocations Branch, Policy and Rules Division, Mass Media Bureau.

[FR Doc. 00–28879 Filed 11–9–00; 8:45 am]

BILLING CODE 6712–01–U

FEDERAL COMMUNICATIONS COMMISSION

47 CFR Part 73

[DA 00–2423; MM Docket No. 97–130; RM–8751]

Radio Broadcasting Services; Galesburg, IL, and Ottumwa, IA

AGENCY: Federal Communications Commission.

ACTION: Final rule.

SUMMARY: This document denies a Petition for Reconsideration filed by Galesburg Broadcasting Company directed to the Report and Order in this proceeding which upgraded Station KTWA, Ottumwa, Iowa, to specify operation on Channel 224C2. *See* 63 FR 57608, October 28, 1998. With this action, the proceeding is terminated.

FOR FURTHER INFORMATION CONTACT: Robert Hayne, Mass Media Bureau (202) 418–2177

SUPPLEMENTARY INFORMATION: This is a synopsis of the Commission's *Memorandum Opinion and Order* in MM Docket No. 97–130, adopted October 18, 2000, and released October 27, 2000. The full text of this decision is available for inspection and copying during normal business hours in the FCC Reference Information Center at Portals 11, CY–A257, 445 12th Street, SW, Washington, DC. The complete text of this decision may also be purchased from the Commission's copy contractor, International Transcription Service, Inc., (202) 857–3805, 1231 M Street, NW, Washington, DC 20036.

Provisions of the Regulatory Flexibility Act of 1980 do not apply to this proceeding.

Members of the public should note that from the time a Notice of Proposed Rule Making is issued until the matter is no longer subject to Commission consideration or court review, all *ex parte* contacts are prohibited in Commission proceedings, such as this one, which involve channel allotments. See 47 CFR 1.1204(b) for rules governing permissible *ex parte* contacts.

For information regarding proper filing procedures for comments, see 47 CFR 1.415 and 1.420.

Federal Communications Commission.

John A. Karousos,

Chief, Allocations Branch, Policy and Rules Division, Mass Media Bureau.

[FR Doc. 00–28878 Filed 11–9–00; 8:45 am]

BILLING CODE 6712–01–U

FEDERAL COMMUNICATIONS COMMISSION

47 CFR Part 73

[DA No. 00–2425; MM Docket No. 00–54; RM–9835 & RM–9907]

Radio Broadcasting Services; Mount Pleasant and Bogata, TX

AGENCY: Federal Communications Commission.

ACTION: Final rule.

SUMMARY: Leo Ashcraft proposed the allotment of Channel 263A at Mount Pleasant, Texas, as that community's first local broadcast service. *See* 65 FR 17618, April 4, 2000. In response to a counterproposal filed by Bogata Broadcasting Company we will allot Channel 263A at Bogata, Texas, as a first local service, with no allotment being made at Mount Pleasant because no valid continuing expression of interest was filed for a channel at Mount Pleasant. The coordinates for Channel 263A at Bogata, Texas, are 33–23–50 and 95–11–42. A filing window for Channel 263A at Bogata will not be opened at this time. Instead, the issue of opening a filing window for this channel will be addressed by the Commission in a subsequent order.

DATES: Effective December 12, 2000.

FOR FURTHER INFORMATION CONTACT: Kathleen Scheuerle, Mass Media Bureau, (202) 418–2180.

SUPPLEMENTARY INFORMATION: This is a summary of the Commission's Report and Order, MM Docket No. 00–54, adopted October 18, 2000, and released October 27, 2000. The full text of this Commission decision is available for inspection and copying during normal business hours in the Commission's Reference Center, 445 12th Street, SW, Washington, DC. The complete text of this decision may also be purchased from the Commission's copy contractors, International Transcription Services, Inc., 1231 20th Street, NW., Washington, DC 20036, (202) 857–3800, facsimile (202) 857–3805.

List of Subjects in 47 CFR Part 73

Radio broadcasting.

Part 73 of title 47 of the Code of Federal Regulations is amended as follows:

47 CFR PART 73—RADIO BROADCAST SERVICES

1. The authority citation for part 73 continues to read as follows:

Authority: 47 U.S.C. 154, 303, 334, and 336.

§ 73.202 [Amended]

2. Section 73.202(b), the Table of FM Allotments under Texas, is amended by adding Bogata, Channel 263A.

Federal Communications Commission.

John A. Karousos,

Chief, Allocations Branch, Policy and Rules Division, Mass Media Bureau.

[FR Doc. 00–28877 Filed 11–9–00; 8:45 am]

BILLING CODE 6712–01–U

Proposed Rules

Federal Register
Vol. 65, No. 219
Monday, November 13, 2000

This section of the FEDERAL REGISTER contains notices to the public of the proposed issuance of rules and regulations. The purpose of these notices is to give interested persons an opportunity to participate in the rule making prior to the adoption of the final rules.

DEPARTMENT OF AGRICULTURE

Animal and Plant Health Inspection Service

9 CFR Part 130

[Docket No. 99–060–1]

Veterinary Services User Fees; Fees for Permit Applications

AGENCY: Animal and Plant Health Inspection Service, USDA.

ACTION: Proposed rule.

SUMMARY: We are proposing to amend existing user fees for processing applications for permits to import and transport certain animal products, organisms, vectors, and germ plasm. We are also proposing to establish new user fees that would pay the cost of processing applications to import live animals. We are proposing these changes in order to ensure that we recover our costs.

DATES: We invite you to comment on this docket. We will consider all comments that we receive by January 12, 2001.

ADDRESSES: Please send your comment and three copies to: Docket No. 99–060–1, Regulatory Analysis and Development, PPD, APHIS, Suite 3C03, 4700 River Road, Unit 118, Riverdale, MD 20737–1238. Please state that your comment refers to Docket No. 99–060–1.

You may read any comments that we receive on this docket in our reading room. The reading room is located in room 1141 of the USDA South Building, 14th Street and Independence Avenue, SW., Washington, DC. Normal reading room hours are 8 a.m. to 4:30 p.m., Monday through Friday, except holidays. To be sure someone is there to help you, please call (202) 690–2817 before coming.

APHIS documents published in the **Federal Register**, and related information, including the names of organizations and individuals who have commented on APHIS dockets, are available on the Internet at http://www.aphis.usda.gov/ppd/rad/webrepor.html.

FOR FURTHER INFORMATION CONTACT: For information concerning program operations for Veterinary Services, contact Ms. Louise Lothery, Administrative Officer, Management Support Staff, VS, APHIS, 4700 River Road Unit 44, Riverdale, MD 20737–1231; (301) 734–7517.

For information concerning rate development of the proposed user fees, contact Mrs. Kris Caraher, Accountant, Financial Systems and Services Branch, Budget and Accounting Service Enhancement Unit, MRPBS, APHIS, 4700 River Road Unit 54, Riverdale, MD 20737–1232; (301) 734–8351.

SUPPLEMENTARY INFORMATION:

Background

User fees to reimburse the Animal and Plant Health Inspection Service (APHIS) for the costs of providing veterinary diagnostic services and import- and export-related services for live animals and birds and animal products are contained in 9 CFR part 130. Section 130.8 lists miscellaneous flat rate user fees.

In this document, we are proposing to amend existing user fees for processing applications for permits to import or transport certain animal products, organisms, vectors, and germ plasm. We are also proposing to establish user fees to cover the cost of processing applications for permits to import live animals. These proposed changes are explained in detail below.

Fees for Processing Applications for Permits to Import Certain Animal Products, Organisms, Vectors, and Germ Plasm

Currently, under the regulations in § 130.8, APHIS charges flat rate fees for processing Veterinary Services Form 16–3, ''Application for Permit to Import or Transport Controlled Material or Organisms or Vectors.'' This form is used to apply for a permit to import materials derived from animals or materials that have been exposed to animal-source materials. Materials that require a permit include animal tissues, blood, cells, or cell lines of livestock or poultry origin, RNA/DNA extracts, hormones, enzymes, monoclonal antibodies, certain polyclonal antibodies, antisera, bulk shipments of test kit reagents, and microorganisms including bacteria, viruses, protozoa, and fungi. Exceptions to this requirement are tissues, serum, and blood from primates. Various other animal materials from countries where certain livestock diseases exist require a permit to be imported into the United States. Such materials include dairy products (except butter and cheese), meat products (*e.g.*, meat pies, prepared foods), and various animal products, including, but not limited to, hides, bones, and carcasses, parts, or products of certain animals that are destined for use as trophies.

Also under § 130.8, APHIS charges a flat fee for processing applications to import germ plasm. APHIS services related to inspecting imported germ plasm and empty germ plasm containers are charged at the hourly rate user fees listed in § 130.30.

The table below lists existing and proposed user fees for the services listed.

Service	Existing user fees				Proposed user fee
	Oct. 1, 2000–Sept. 30, 2001	Oct. 1, 2001–Sept. 30, 2002	Oct. 1, 2002–Sept. 30, 2003	Beginning Oct. 1, 2003	Beginning with effective date of the final rule for this action
Processing a permit application to import fetal bovine serum when inspection of a facility is required.	$283.00 per application.	$292.00 per application.	$300.00 per application.	$309.00 per application.	$322.00 per application.
Processing an initial permit application to import germ plasm.[1]	55.00 per load	57.00 per load	58.00 per load	60.00 per load	94.00 per application.
Processing an amended permit application to import germ plasm.[1]	55.00 per load	57.00 per load	58.00 per load	60.00 per load	47.00 per application.
Processing an initial permit application to import certain animal products or import or transport organisms or vectors.	36.00 per application	37.00 per application	38.00 per application	39.00 per application	94.00 per application.
Processing an amended permit application to import certain animal products or import or transport organisms or vectors.	15.00 per amended application.	15.00 per amended application.	16.00 per amended application.	16.00 per amended application.	47.00 per amended application.
Processing a renewed permit application to import certain animal products or import or transport organisms or vectors.	19.00 per application	20.00 per application	21.00 per application	21.00 per application	61.00 per application.

[1] Current fees for processing applications for permits to import germ plasm are not broken into fees for initial and amended applications. Under this proposal, different fees would be charged for processing initial and amended applications.

On August 28, 2000, we published in the **Federal Register** a final rule (65 FR 51997–52010, Docket No. 97–058–2) that amended the user fees for the services listed above. When we calculated the fees established by that final rule, we assumed that the fees in place prior to the rule had been calculated to cover all the costs of providing the respective services. Therefore, in calculating the current fees, we simply added cost components for employee pay increases and additional costs for inflation (based on the consumer price index) to the previous fees.

Since the time when we calculated the current fees, we have conducted an in-depth review of the basic costs of providing the services listed above. In that review, we found that the existing fees and fees previously collected for the services listed (1) underestimated the amount of direct labor performed by administrative and professional staff who are involved in the permit application process, and (2) do not cover overhead costs. We are, therefore, proposing to amend the fees accordingly as shown above. The proposed fees will allow us to recover all the costs associated with providing the services listed, including direct labor and overhead costs.

Calculation of Fees—Animal Products Permit Applications

We began our calculation of the proposed fees by estimating future annual volumes of each type of application based on the average of the actual volumes of each type of application processed in FY's 1998 and 1999. Those volumes are shown in the table below.

	Volumes		
	FY 1998	FY 1999	Projected annual volumes
New applications	2,071	1,214	1,643
Amended applications	556	331	435
Renewed applications	2,056	1,476	1,766

We then estimated that the total annual cost of processing the projected volume of applications would be $282,000. Our estimate includes cost components for the salaries of employees involved in processing applications, along with costs of billings and collections, rent, equipment (such as computer technologies), agency overhead, and departmental charges.

We then estimated, based on our experience processing applications, that processing amended and renewed applications respectively take approximately 50 percent and 65 percent of the time required to process a new application. We used the following equation to determine the proposed fee for a new application. In the equation, ''x'' represents the fee for new applications.

New		Amended		Renewed		Total cost
1643x	+	435(.5x)	+	1766(.65x)	=	$282,000

x = 93.73753

We then rounded the value for ''x'' to the nearest whole dollar to arrive at the proposed user fee of $94.00 for a new application for a permit to import animal products. Since processing an amended application takes approximately 50 percent of the time it takes to process a new application, we are proposing a fee of $47.00 for amended applications. Finally, since processing a renewed application takes approximately 65 percent of the time it takes to process a new application, we are proposing a fee of $61.00 for renewed applications.

Calculation of Fees—Fetal Bovine Serum Permit Application

The fee for processing a permit application to import fetal bovine serum when inspection of a facility is required pays the cost of providing two distinct APHIS services. One covers the cost of processing an application to import fetal bovine serum (representing $94.00 of the fee), and the other covers the cost of inspecting the facility where the fetal bovine serum will be housed (representing the remaining $228.00 of the fee). We determined these costs based on the estimated time it takes to process the applications and inspect the facilities. The portion of the fee covering the costs of processing an application is the same as that proposed for processing an application to import other animal products and live animals. The portion of the fee covering the cost of inspecting the facility where fetal bovine serum will be housed is based on the existing hourly rate user fee of $76.00 per hour that is contained in § 130.30 of the regulations. We set this portion of the fee at $228.00 (3 × $76.00) because inspections of this type of facility have averaged 3 hours in recent years.

Fees for Processing Applications to Import Live Animals

Currently, APHIS uses appropriated funds to cover the costs of processing applications and amended applications to import live animals. In this document, we are proposing to establish a flat-rate user fee to recover these costs. APHIS currently charges flat-rate user fees to persons applying for permits to import animal products, organisms, and vectors, as well as animal semen, embryos, and ova. By establishing flat rate user fees for processing applications and amended applications for permits to import live animals, we would make our user fee regulations more consistent and shift the cost of paying for these services away from taxpayers toward the actual users of these services.

Our proposed flat-rate user fees for processing these applications are as follows:

Service	User fee
Processing initial application for a live animal import permit	$94.00
Processing application for an amended permit	47.00

The above fees are the same as those we are proposing to charge for processing applications for permits to import animal products, organisms, vectors, and germ plasm. We believe that these fees will adequately cover the cost of providing these services.

Calculation of Fees—Live Animal Permit Applications

We began our calculation of the proposed fees by estimating future annual volumes of each type of application based on the approximate volumes of each type of application processed in FY 1999. In FY 1999, APHIS processed approximately 7,500 new applications and 1,500 amended applications to import live animals.

We then estimated that the total annual cost of processing new and amended applications to import live animals, based on the expected volume of applications to be processed, would be $775,970. Our estimate includes cost components for the salaries of employees involved in processing applications, along with costs of billings and collections, rent, equipment (such as computer technologies), agency overhead, and departmental charges.

We then estimated, based on our experience processing applications, that it takes approximately half as much time to process an amended application as it takes to process a new application. Given these estimates, we used the following equation to determine the proposed fee for a new application. In the equation, ''x'' represents the fee for a new application.

New		Amended		Total cost
7500x	+	1500(.5x)	=	$775,970

x = 94.0569

We then rounded the value for ''x'' to the nearest whole dollar to arrive at the proposed user fee of $94.00 for a new application for a permit to import live animals. Since processing an amended application takes approximately half the time it takes to process a new application, we are proposing a fee of $47.00 for amended applications.

All of the proposed fees described in this document would be located in a new § 130.4, and the current fees would be removed from § 130.8. We also would move the fees for import compliance assistance that are currently contained in § 130.8 to the new § 130.4 because those fees are directly associated with the importation of animals and animal products. Import compliance assistance fees are charged to persons who need additional assistance from an APHIS headquarters veterinarian in order to facilitate the processing or completion of particular importations of animals or animal products.

Executive Order 12866 and Regulatory Flexibility Act

This proposed rule has been reviewed under Executive Order 12866. The rule has been determined to be not significant for the purposes of Executive Order 12866 and, therefore, has not been reviewed by the Office of Management and Budget.

In accordance with 5 U.S.C. 603, we have performed an initial regulatory flexibility analysis, which is set out below, regarding the economic effects of this proposed rule on small entities. Based on the information we have, there is no basis to conclude that this rule will result in any significant economic effect on a substantial number of small entities. However, we do not currently have all of the data necessary for a comprehensive analysis of the effects of this proposed rule on small entities. Therefore, we are inviting comments on potential effects.

User fees to reimburse APHIS for the costs of providing veterinary diagnostic services and import- and export-related services for live animals and birds and animal products are contained in 9 CFR part 130. Section 130.8 lists the user fees APHIS charges for processing applications for permits to import germ plasm and to import or transport certain animal products, organisms, and vectors.

We are proposing to amend existing user fees for processing applications for permits to import and transport certain animal products, organisms, vectors, and germ plasm. We are also proposing to establish new user fees that would pay the cost of processing applications to import live animals. We are proposing these changes in order to ensure that we recover our costs.

User Fees for the Importation of Germ Plasm

APHIS currently charges a fee of $55.00 for processing applications to import germ plasm. This proposed rule would establish two separate fees: One for processing initial applications for permits, and one for processing amended applications. The fee for processing each new permit application would be $94.00, and the fee for processing each amended permit application would be $47.00.

The effect of the proposal would be to increase revenues for APHIS, since the fees for new applications would exceed the existing fee of $55.00. At a minimum, importers would be charged $47.00 for applying for an amended permit.

In FY 1999, APHIS processed 448 applications for permits to import germ plasm (semen and embryos), generating total revenues of $17,696. We estimate that 90 of those applications represent amended applications, and the rest represent new applications.

Had the proposed fee schedule been in effect during FY 1999 [2], APHIS would have generated approximately $37,882 from processing those applications, an increase of $20,186 over actual revenues for that year. Further, as a result of increased world trade, it is likely that APHIS' annual revenues from processing product applications would increase over time.

The number of different entities that submitted applications in FY 1999 and the number of applications submitted by each are not available. However, because approximately 90 entities submitted amended applications during the year, we know that the number of different entities is significantly less than the total application count of 448. The economic effect on individual entities would vary, depending on the size of the entity and the number of permits required. For an entity that requires only a few permits each year, as is likely to be the case with the smaller entities that are affected, the proposed fees are not likely to have a significant economic impact. However, even an entity that requires a large number of permits might not be significantly affected if it is large enough to easily absorb the increased fees.

User Fees for Processing Applications for Permits to Import Animal Products

APHIS currently charges applicants a fee for processing their applications for permits to import animal products (including byproducts, organisms, and vectors). The fees vary, depending on such factors as the type of application and the type of product.

Under the proposal, all fees would be increased from their current levels, as shown earlier in this document.

The proposed fee amounts have been set so as to allow APHIS to recover the full costs of processing the applications. The current fee levels do not allow for full cost recovery, especially given the additional staffing needed to provide applicants with a quick turnaround of their permit requests.

In FY 1999, APHIS processed 2,575 applications for permits to import animal products. Of that total, 2 were fetal bovine serum (with facility inspection) applications, 856 were initial applications to import animal products or import or transport organisms or vectors, 241 were amended applications, and 1,476 were renewed applications.

APHIS generated revenues of $48,868.50 from processing the 2,575 applications in FY 1999.[3] Had the proposed fee schedule been in effect during FY 1999, APHIS would have generated $182,351 from processing those applications, an increase of $133,482.50 over actual revenues for that year. Further, as a result of increased world trade, it is likely that APHIS' annual revenues from processing product applications would increase over time.

The number of different entities that submitted applications in FY 1999 and the number of applications submitted by each are not available. However, because 241 entities submitted amended applications and 1,476 entities submitted renewed applications during the year, we know that the number of different entities is significantly less than the total application count of 2,575. The economic effect on individual entities would vary, depending on the size of the entity and the number of permits required. For an entity that requires only a few permits each year, as is likely to be the case with the smaller entities that are affected, the proposed fees are not likely to have a significant economic impact. However, even an entity that requires a large number of permits might not be

[2] For FY 1999, fees for processing applications for permits to import germ plasm were set at $39.50. Data on fee receipts based on current fees, which are effective October 1, 2000, are not available.

[3] The current user fees for this service were made effective October 1, 2000. The revenues collected in 1999 are based on collections of the fees that were in place during FY 1999.

significantly affected if it is large enough to easily absorb the increased fees.

User Fees for Processing Applications for Permits to Import Animals

Under APHIS' rules, importers must, under certain circumstances, apply for and obtain an import permit from the agency prior to importing live animals.[4] Currently, APHIS does not charge applicants a fee for processing their permit applications.

Under the proposed rule, APHIS would charge applicants $94.00 for each new application, and $47.00 for each amended application to import live animals. The proposed rule is designed to shift the cost of processing the applications from the general taxpayer (via appropriated funds) to the users of those services, *i.e.*, the permit applicants. The proposed rule would also serve to remove an existing inequity, since APHIS currently charges applicants a fee for processing their applications for permits to import animal products and germ plasm.

In FY 1999, APHIS processed approximately 9,000 applications for permits to import animals. Of that total, approximately 7,500 were initial applications and 1,500 were amended applications. Had the proposed fee schedule been in effect during FY 1999, APHIS would have generated additional revenues of $775,500 from processing those applications. Further, as a result of increased world trade, it is likely that APHIS' annual revenues from processing applications for permits to import live animals will increase over time.

The number of different entities that submitted applications in FY 1999 and the number of applications submitted by each are not available. However, because some entities submitted amended applications and some entities submitted more than one new application during the year, we know that the number of different entities is less than the total application count of 9,000.

Data on the types of entities who submit applications is not available, but they are believed to be varied, and include breeders, commercial researchers, universities, zoos, and private individuals. At least some of the commercial entity applicants are believed to be brokers acting on behalf of their client customers. Even though they do not submit permit applications to APHIS, the client customers of brokers are likely to be affected by this proposed rule, since the application fees incurred by the brokers are likely to be passed on to them. The economic effect on individual entities would vary, depending on the size of the entity and the number of permits required. For an entity that requires only a few permits each year, as is likely to be the case with the smaller entities that are affected, the proposed fees are not likely to have a significant economic effect. However, even an entity that requires a large number of permits might not be significantly affected, if it is large enough to easily absorb the proposed fees.

Effects on Small Entities

The Regulatory Flexibility Act (RFA) requires that agencies consider the economic effects of their rules on small entities, *i.e.*, small businesses, organizations, and governmental jurisdictions. The proposed changes discussed above would affect those entities in the United States that import live animals, animal products, and germ plasm. They would be affected because they would have to pay new fees, or higher fees, to have APHIS process their permit applications and, when required, inspect their facilities or products.

The types of entities that may be affected vary widely, and include breeders, commercial researchers, universities, zoos, and private individuals. At least some of the commercial entities are likely to be brokers acting on behalf of their client customers. Even though they themselves do not submit permit applications to APHIS, the client customers of brokers would be affected by the proposed changes if the increased fees incurred by the brokers are passed on to them.

The number of different entities that would be affected by the proposed changes, if they are adopted, and the extent of the effect on each, is unknown. In FY 1999, APHIS processed approximately 12,023 live animal, animal product, and germ plasm permit applications, but that figure overstates the number of affected entities, because some entities submitted more than one application during the year. Furthermore, the total application count of 12,023 includes an unknown number of private individuals in the United States who import live animals, animal products or germ plasm for nonbusiness reasons. These private individuals are not ''entities'' for purposes of this regulatory flexibility analysis.

It is reasonable to assume that most businesses affected by this proposed rule are small in size. This is because most U.S. businesses in general are small, based on the standards of the U.S. Small Business Administration (SBA). In 1996, for example, there were 1,197 U.S. firms in SIC 0751, a classification comprised of firms primarily engaged in performing certain services, including breeding, for cattle, hogs, sheep, goats, and poultry. Of those 1,197 firms, 97 percent had less than $5.0 million in sales that year, the SBA's small entity threshold. Similarly, in 1996, there were 7,408 U.S. firms in SIC 0752, a classification comprised of firms primarily engaged in performing certain services for pets, equines, and other animal specialties, including breeding services. Of those 7,408 firms, over 99 percent had less than $5.0 million in sales that year, the SBA's small entity threshold for firms in that SIC category. Accordingly, most of the businesses affected by this proposed rule are likely to be small in size.

The potential economic effect on individual entities would vary, depending on the number of permits required by each. For an entity that requires only a few permits each year, as is likely to be the case with the smaller entities that are affected, the proposed fees are not likely to have a significant economic effect. For an entity that submits five new live animal applications per year, the additional annual cost would be $470.

Alternatives Considered

One alternative to this proposed rule would be to make no changes to the user fee regulations. We rejected this alternative for several reasons. First, it would not allow us to recover the full cost of providing the import services for which user fees have already been established, *i.e.*, the germ plasm and animal product services. APHIS cannot charge user fees that recover less than the full cost of providing the service. Second, it would not allow us to shift the cost of providing live animal import services from the general taxpayer to the user of those services. (This shifting also serves to remove an existing inequity, since APHIS currently charges a fee for providing animal product and germ plasm import services.)

Another alternative would be to either exempt small businesses from the user fees or establish a different user fee structure for small businesses. This alternative was also rejected, because APHIS cannot exempt certain classes of users, such as small businesses. Nor, as indicated above, can APHIS charge user fees that recover less than the full cost of providing the service.

[4] Whether or not an importer is required to obtain a permit from APHIS depends on several factors, including the type of animal to be imported and the country of export. The rules are designed to protect the health of the U.S. animal population, since such imports pose a risk of introducing animal diseases.

This proposed rule contains information collection requirements, which have been submitted for approval to the Office of Management and Budget (see ''Paperwork Reduction Act'' below).

Executive Order 12988

This proposed rule has been reviewed under Executive Order 12988, Civil Justice Reform. If this proposed rule is adopted: (1) All State and local laws and regulations that are inconsistent with this rule will be preempted; (2) no retroactive effect will be given to this rule; and (3) administrative proceedings will not be required before parties may file suit in court challenging this rule.

Paperwork Reduction Act

In accordance with section 3507(d) of the Paperwork Reduction Act of 1995 (44 U.S.C. 3501 *et seq.*), the information collection or recordkeeping requirements included in this proposed rule have been submitted for approval to the Office of Management and Budget (OMB). Please send written comments to the Office of Information and Regulatory Affairs, OMB, Attention: Desk Officer for APHIS, Washington, DC 20503. Please state that your comments refer to Docket No. 99–060–1. Please send a copy of your comments to: (1) Docket No. 99–060–1, Regulatory Analysis and Development, PPD, APHIS, suite 3C03, 4700 River Road Unit 118, Riverdale, MD 20737–1238, and (2) Clearance Officer, OCIO, USDA, room 404–W, 14th Street and Independence Avenue, SW., Washington, DC 20250. A comment to OMB is best assured of having its full effect if OMB receives it within 30 days of publication of this proposed rule.

In this document, we are proposing to amend existing user fees for processing applications for permits to import and transport certain animal products, organisms, vectors, and germ plasm. We are also proposing to establish new user fees that would pay the cost of processing applications to import live animals. We are proposing these changes in order to ensure that we recover our costs.

We are soliciting comments from the public (as well as affected agencies) concerning our proposed information collection and recordkeeping requirements. These comments will help us:

(1) Evaluate whether the proposed information collection is necessary for the proper performance of our agency's functions, including whether the information will have practical utility;

(2) Evaluate the accuracy of our estimate of the burden of the proposed information collection, including the validity of the methodology and assumptions used;

(3) Enhance the quality, utility, and clarity of the information to be collected; and

(4) Minimize the burden of the information collection on those who are to respond (such as through the use of appropriate automated, electronic, mechanical, or other technological collection techniques or other forms of information technology, e.g., permitting electronic submission of responses).

Estimate of burden: Public reporting burden for this collection of information is estimated to average .0166 hours per response.

Respondents: Importers and brokers of live animals, animal products, germ plasm, organisms, and vectors.

Estimated annual number of respondents: 8100.

Estimated annual number of responses per respondent: 1.111.

Estimated annual number of responses: 9000.

Estimated total annual burden on respondents: 149.4 hours.

Copies of this information collection can be obtained from: Mrs. Celeste Sickles, APHIS' Information Collection Coordinator, at (301) 734–7477.

List of Subjects in 9 CFR Part 130

Animals, Birds, Diagnostic reagents, Exports, Imports, Poultry and poultry products, Quarantine, Reporting and recordkeeping requirements, Tests.

Accordingly, we propose to amend 9 CFR part 130 as follows:

PART 130—USER FEES

1. The authority citation for part 130 would continue to read as follows:

Authority: 5 U.S.C. 5542; 7 U.S.C. 1622; 19 U.S.C. 1306; 21 U.S.C. 102–105, 111, 114, 114a, 134a, 134c, 134d, 134f, 136, and 136a; 31 U.S.C. 3701, 3716, 3717, 3719, and 3720A; 7 CFR 2.22, 2.80, and 371.4.

2. Section 130.4 would be added to read as follows:

§ 130.4 User fees for processing import permit applications.

User fees for processing applications for permits to import certain animals and animal products (using VS forms 16–3 and 17–129) are listed in the table below. The person for whom the service is provided and the person requesting the service are jointly and severally liable for payment of these user fees in accordance with §§ 130.50 and 130.51.

Service	Unit	User fee			
		Effective Date of final rule—Sept. 30, 2001	Oct. 1, 2001–Sept. 30, 2002	Oct. 1, 2002–Sept. 30, 2003	Beginning Oct. 1, 2003
Import compliance assistance:					
Simple (2 hours or less)	per release	64.00	66.00	68.00	70.00
Complicated (more than 2 hours)	per release	164.00	169.00	174.00	180.00
Processing an application for a permit to import live animals, animal products or byproducts, organisms, vectors, or germ plasm (embryos or semen) or to transport organisms or vectors.[1]					
Initial permit	per application	94.00	94.00	94.00	94.00
Amended permit	per amended application	47.00	47.00	47.00	47.00
Renewed permit[2]	per application	61.00	61.00	61.00	61.00
Processing an application for a permit to import fetal bovine serum when facility inspection is required.	per application	322.00	322.00	322.00	322.00

[1] Using Veterinary Services Form 16–3, ''Application for Permit to Import or Transport Controlled Material or Organisms or Vectors,'' or Form 17–129, ''Application for Import or In Transit Permit (Animals, Animal Semen, Animal Embryos, Birds, Poultry, or Hatching Eggs).''

[2] Permits to import germ plasm and live animals are not renewable.

§ 130.8 [Amended]

3. In § 130.8(a), the table would be amended by removing the entries for ''Germ plasm being imported'' (including footnote 2), ''Import compliance assistance'', and ''Processing VS Form 16–3''.

Done in Washington, DC, this 20th day of October 2000.

Bobby R. Acord,

Acting Administrator, Animal and Plant Health Inspection Service.

[FR Doc. 00–28973 Filed 11–9–00; 8:45 am]

BILLING CODE 3410–34–U

DEPARTMENT OF TRANSPORTATION

Federal Aviation Administration

14 CFR Part 39

[Docket No. 2000–NM–319–AD]

RIN 2120–AA64

Airworthiness Directives; Empresa Brasileira de Aeronautica S.A. (EMBRAER) Model EMB–135 and EMB–145 Series Airplanes

AGENCY: Federal Aviation Administration, DOT.

ACTION: Notice of proposed rulemaking (NPRM).

SUMMARY: This document proposes the adoption of a new airworthiness directive (AD) that is applicable to certain EMBRAER Model EMB–135 and EMB–145 series airplanes. This proposal would require replacement of certain brake control units (BCU) with new units. This action is necessary to prevent uncommanded application of 50 percent braking in one pair of wheels, which could result in the airplane skidding off the runway. This action is intended to address the identified unsafe condition.

DATES: Comments must be received by December 13, 2000.

ADDRESSES: Submit comments in triplicate to the Federal Aviation Administration (FAA), Transport Airplane Directorate, ANM–114, Attention: Rules Docket No. 2000–NM–319–AD, 1601 Lind Avenue, SW., Renton, Washington 98055–4056. Comments may be inspected at this location between 9:00 a.m. and 3:00 p.m., Monday through Friday, except Federal holidays. Comments may be submitted via fax to (425) 227–1232. Comments may also be sent via the Internet using the following address: 9-anm-nprmcomment@faa.gov. Comments sent via fax or the Internet must contain ''Docket No. 2000–NM–319–AD'' in the subject line and need not be submitted in triplicate. Comments sent via the Internet as attached electronic files must be formatted in Microsoft Word 97 for Windows or ASCII text.

The service information referenced in the proposed rule may be obtained from Empresa Brasileira de Aeronautica S.A. (EMBRAER), P.O. Box 343—CEP 12.225, Sao Jose dos Campos SP, Brazil. This information may be examined at the FAA, Transport Airplane Directorate, 1601 Lind Avenue, SW., Renton, Washington; or at the FAA, Atlanta Aircraft Certification Office, One Crown Center, 1895 Phoenix Boulevard, suite 450, Atlanta, Georgia.

FOR FURTHER INFORMATION CONTACT: Robert Capezzuto, Aerospace Engineer, Systems and Flight Test Branch, ACE–116A, FAA, Atlanta Aircraft Certification Office, One Crown Center, 1895 Phoenix Boulevard, suite 450, Atlanta, Georgia 30349; telephone (770) 703–6071; fax (770) 703–6097.

SUPPLEMENTARY INFORMATION:

Comments Invited

Interested persons are invited to participate in the making of the proposed rule by submitting such written data, views, or arguments as they may desire. Communications shall identify the Rules Docket number and be submitted in triplicate to the address specified above. All communications received on or before the closing date for comments, specified above, will be considered before taking action on the proposed rule. The proposals contained in this notice may be changed in light of the comments received.

Submit comments using the following format:

- Organize comments issue-by-issue. For example, discuss a request to change the compliance time and a request to change the service bulletin reference as two separate issues.
- For each issue, state what specific change to the proposed AD is being requested.
- Include justification (*e.g.,* reasons or data) for each request.

Comments are specifically invited on the overall regulatory, economic, environmental, and energy aspects of the proposed rule. All comments submitted will be available, both before and after the closing date for comments, in the Rules Docket for examination by interested persons. A report summarizing each FAA-public contact concerned with the substance of this proposal will be filed in the Rules Docket.

Commenters wishing the FAA to acknowledge receipt of their comments submitted in response to this notice must submit a self-addressed, stamped postcard on which the following statement is made: ''Comments to Docket Number 2000–NM–319–AD.'' The postcard will be date stamped and returned to the commenter.

Availability of NPRMs

Any person may obtain a copy of this NPRM by submitting a request to the FAA, Transport Airplane Directorate, ANM–114, Attention: Rules Docket No. 2000–NM–319–AD, 1601 Lind Avenue, SW., Renton, Washington 98055–4056.

Discussion

The Departmento de Aviacao Civil (DAC), which is the airworthiness authority for Brazil, notified the FAA that an unsafe condition may exist on certain EMBRAER Model EMB–135 and EMB–145 series airplanes. The DAC advises that it received a report of one occurrence in which the flight crew noticed uncommanded brake application on an EMB–145 series airplane. Analysis of the brake control unit (BCU) that was removed after this occurrence revealed a condition that caused uncommanded application of 50 percent braking in one pair of wheels. This condition, if not corrected, could result in the airplane skidding off the runway.

Explanation of Relevant Service Information

EMBRAER has issued Service Bulletin 145–32–0060, Change No. 01, dated June 6, 2000, which describes procedures for replacement of certain BCU's with new units. The procedures involve converting BCU's having a particular part number to a new part number, replacing certain units with new units, and performing a functional check of the main brake system. Accomplishment of the actions specified in the service bulletin is intended to adequately address the identified unsafe condition. The DAC classified this service bulletin as mandatory and issued Brazilian airworthiness directive 2000–07–01, dated August 20, 2000, in order to assure the continued airworthiness of these airplanes in Brazil.

FAA's Conclusions

These airplane models are manufactured in Brazil and are type certificated for operation in the United States under the provisions of section 21.29 of the Federal Aviation Regulations (14 CFR 21.29) and the applicable bilateral airworthiness agreement. Pursuant to this bilateral airworthiness agreement, the DAC has

kept the FAA informed of the situation described above. The FAA has examined the findings of the DAC, reviewed all available information, and determined that AD action is necessary for products of this type design that are certificated for operation in the United States.

Explanation of Requirements of Proposed Rule

Since an unsafe condition has been identified that is likely to exist or develop on other airplanes of the same type design registered in the United States, the proposed AD would require accomplishment of the actions specified in the service bulletin described previously.

Difference Between Proposed AD and Brazilian Airworthiness Directive

Operators should note that the applicability of the Brazilian airworthiness directive includes all Model EMB–135 and EMB–145 series airplanes. However, the applicability of this proposed AD points to the effectivity of the referenced service bulletin, which specifies affected airplane serial numbers and provides information on in-production airplanes.

Cost Impact

The FAA estimates that 165 Model EMB–135 and EMB–145 series airplanes of U.S. registry would be affected by this proposed AD. It would take approximately 5 work hours per airplane (2.5 work hours per BCU) to accomplish the proposed actions, at an average labor rate of $60 per work hour. Required parts would be provided by a vendor at no charge to the operator. Based on these figures, the cost impact of the proposed AD on U.S. operators is estimated to be $49,500, or $300 per airplane.

The cost impact figure discussed above is based on assumptions that no operator has yet accomplished any of the proposed requirements of this AD action, and that no operator would accomplish those actions in the future if this AD were not adopted. The cost impact figures discussed in AD rulemaking actions represent only the time necessary to perform the specific actions actually required by the AD. These figures typically do not include incidental costs, such as the time required to gain access and close up, planning time, or time necessitated by other administrative actions.

Regulatory Impact

The regulations proposed herein would not have a substantial direct effect on the States, on the relationship between the national Government and the States, or on the distribution of power and responsibilities among the various levels of government. Therefore, it is determined that this proposal would not have federalism implications under Executive Order 13132.

For the reasons discussed above, I certify that this proposed regulation: (1) Is not a ''significant regulatory action'' under Executive Order 12866; (2) is not a ''significant rule'' under the DOT Regulatory Policies and Procedures (44 FR 11034, February 26, 1979); and (3) if promulgated, will not have a significant economic impact, positive or negative, on a substantial number of small entities under the criteria of the Regulatory Flexibility Act. A copy of the draft regulatory evaluation prepared for this action is contained in the Rules Docket. A copy of it may be obtained by contacting the Rules Docket at the location provided under the caption **ADDRESSES.**

List of Subjects in 14 CFR Part 39

Air transportation, Aircraft, Aviation safety, Safety.

The Proposed Amendment

Accordingly, pursuant to the authority delegated to me by the Administrator, the Federal Aviation Administration proposes to amend part 39 of the Federal Aviation Regulations (14 CFR part 39) as follows:

PART 39—AIRWORTHINESS DIRECTIVES

1. The authority citation for part 39 continues to read as follows:

Authority: 49 U.S.C. 106(g), 40113, 44701.

§ 39.13 [Amended]

2. Section 39.13 is amended by adding the following new airworthiness directive:

Empresa Brasileira De Aeronautica S.A. (Embraer): Docket 2000–NM–319–AD.

Applicability: Model EMB–135 and EMB–145 series airplanes, certificated in any category, as listed in EMBRAER Service Bulletin 145–32–0060, Change No. 01, dated June 6, 2000.

Note 1: This AD applies to each airplane identified in the preceding applicability provision, regardless of whether it has been modified, altered, or repaired in the area subject to the requirements of this AD. For airplanes that have been modified, altered, or repaired so that the performance of the requirements of this AD is affected, the owner/operator must request approval for an alternative method of compliance in accordance with paragraph (c) of this AD. The request should include an assessment of the effect of the modification, alteration, or repair on the unsafe condition addressed by this AD; and, if the unsafe condition has not been eliminated, the request should include specific proposed actions to address it.

Compliance: Required as indicated, unless accomplished previously.

To prevent uncommanded application of 50 percent braking in one pair of wheels, which could result in the airplane skidding off the runway, accomplish the following:

Replacement

(a) Within 2,000 landings after the effective date of this AD: Replace the brake control unit (BCU) having part number (P/N) 42–951–1 or 42–951–2 with a new BCU having P/N 42–951–3 in accordance with EMBRAER Service Bulletin 145–32–0060, Change No. 01, dated June 6, 2000.

Spares

(b) As of the effective date of this AD, no person shall install on any airplane a BCU having P/N 42–951–1 or 42–951–2.

Alternative Methods of Compliance

(c) An alternative method of compliance or adjustment of the compliance time that provides an acceptable level of safety may be used if approved by the Manager, Atlanta Aircraft Certification Office (ACO), FAA. Operators shall submit their requests through an appropriate FAA Principal Maintenance Inspector, who may add comments and then send it to the Manager, Atlanta ACO.

Note 2: Information concerning the existence of approved alternative methods of compliance with this AD, if any, may be obtained from the Atlanta ACO.

Special Flight Permits

(d) Special flight permits may be issued in accordance with sections 21.197 and 21.199 of the Federal Aviation Regulations (14 CFR 21.197 and 21.199) to operate the airplane to a location where the requirements of this AD can be accomplished.

Note 3: The subject of this AD is addressed in Brazilian airworthiness directive 2000–07–01, dated August 20, 2000.

Issued in Renton, Washington, on November 6, 2000.

Donald L. Riggin,

Acting Manager, Transport Airplane Directorate, Aircraft Certification Service.

[FR Doc. 00–28968 Filed 11–9–00; 8:45 am]

BILLING CODE 4910–13–P

DEPARTMENT OF TRANSPORTATION

Federal Aviation Administration

14 CFR Part 71

[Airspace Docket No. 00–ANM–16]

Proposed Modification of Class E Airspace, Tillamook, OR

AGENCY: Federal Aviation Administration (FAA), DOT.

ACTION: Notice of Proposed Rulemaking (NPRM).

SUMMARY: This action proposes to modify the Class E airspace at Tillamook, OR. A new Area Navigation (RNAV) Standard Instrument Approach Procedure (SIAP) to Runway (RWY) 13 at Tillamook Airport has made this proposal necessary. Additional Class E 700-feet, and 1,200 feet controlled airspace, above the surface of the Earth is required to contain aircraft executing the RNAV RWY 13 SIAP with a Terminal Arrival Area (TAA) design to Tillamook Airport. The intended effect of this proposal is to provide adequate controlled airspace for Instrument Flight Rules (IFR) operations at Tillamook Airport, Tillamook, OR.

DATES: Comments must be received on or before December 28, 2000.

ADDRESSES: Send comments on the proposal in triplicate to: Manager, Airspace Branch, ANM–520, Federal Aviation Administration, Docket No. 99–ANM–16, 1601 Lind Avenue SW, Renton, Washington 98055–4056.

An informal docket may also be examined during normal business hours in the office of the Manager, Air Traffic Division, Airspace Branch, at the address listed above.

FOR FURTHER INFORMATION CONTACT: Brian Durham, ANM–520.7, Federal Aviation Administration, Docket No. 00–ANM–16 Lind Avenue SW, Renton, Washington 98055–4056: telephone number: (425) 227–2527.

SUPPLEMENTARY INFORMATION:

Comments Invited

Interested parties are invited to participate in this proposed rulemaking by submitting such written data, views, or arguments, as they may desire. Comments that provide the factual basis supporting the views and suggestions presented are particularly helpful in developing reasoned regulatory decisions on the proposal. Comments are specifically invited on the overall regulatory, aeronautical, economic, environmental, and energy related aspects of the proposal. Communications should identify the airspace docket number and be submitted in triplicate to the address listed above. Commenters wishing the FAA to acknowledge receipt of their comments on this action must submit, with those comments, a self-addressed stamped postcard on which the following statement is made: ''Comments to Airspace Docket No. 00–ANM–16.'' The postcard will be date/time stamped and returned to the commenter. All communications received on or before the specified closing date for comments will be considered before taking action on the proposed rule. The proposal contained in this action may be changed in the light of comments received. All comments submitted will be available for examination at the address listed above both before and after the closing date for comments. A report summarizing each substantive public contact with FAA personnel concerned with this rulemaking will be filed in the docket.

Availability of NPRM's

Any person may obtain a copy of this NPRM by submitting a request to the Federal Aviation Administration, Airspace Branch, ANM–520, 1601 Lind Avenue SW, Renton, Washington 98055–4056. Communications must identify the docket number of this NPRM. Persons interested in being placed on a mailing list for future NPRM's should also request a copy of Advisory Circular No. 11–2A, which describes the application procedure.

The Proposal

The FAA is considering an amendment to Title 14 Code of Federal Regulations, part 71 (14 CFR part 71) by modifying Class E airspace at Tillamook, OR. A new RNAV SIAP to RWY 13 at Tillamook Airport has made this proposal necessary. Additional controlled airspace from 700 feet, and 1,200 feet, above the surface is required to contain aircraft executing the RNAV RWY 13 SIAP with a TAA design to Tillamook Airport. The FAA establishes Class E airspace where necessary to contain aircraft transitioning between the terminal and en route environments. The intended effect of this proposal is designed to provide for the safe and efficient use of the navigable airspace. This proposal would promote safe flight operations under IFR at the Tillamook Airport and between the terminal and en route transition stages.

The area would be depicted on aeronautical charts for pilot reference. The coordinates for this airspace docket are based on North American Datum 83. Class E airspace areas extending upward from 700 feet or more above the surface of the Earth, are published in Paragraph 6005, of FAA Order 7400.9H dated September 1, 2000, and effective September 16, 2000, which is incorporated by reference in 14 CFR 71.1. The Class E airspace designation listed in this document would be published subsequently in the Order.

The FAA has determined that this proposed regulation only involves an established body of technical regulations for which frequent and routine amendments are necessary to keep them operationally current. It, therefore, (1) Is not a ''significant regulatory action'' under Executive Order 12866; (2) is not a ''significant rule'' under DOT Regulatory Policies and procedures (44 FR 11013; February 26, 1979(; and (3) does not warrant preparation of a Regulatory Evaluation as the anticipated impact is so minimal. Since this is a routine matter that will only affect air traffic procedures and air navigation, it is certified that this rule, when promulgated, will not have a significant economic impact on a substantial number of small entities under the criteria of the Regulatory Flexibility Act.

List of Subjects in 14 CFR Part 71

Airspace, Incorporation by reference, Navigation (air).

The Proposed Amendment

In consideration of the foregoing, the Federal Aviation Administration proposes to amend 14 CFR part 71 as follows:

PART 71—DESIGNATION OF CLASS A, CLASS B, CLASS C, CLASS D, AND CLASS E AIRSPACE AREAS; AIRWAYS; ROUTES; AND REPORTING POINTS

1. The authority citation for 14 CFR part 71 continues to read as follows:

Authority: 49 U.S.C. 106(g), 40103, 40113, 40120; E.O. 10854, 24 FR 9565, 3 CFR , 1959–1963 Comp., p. 389.

§ 71.1 [Amended]

2. The incorporation by reference in 14 CFR 71.1 of the Federal Aviation Administration Order 7400.9H, Airspace Designations and Reporting Points, dated September 1, 2000, and effective September 16, 2000, is amended as follows: *Paragraph 6005 Class E airspace areas extending upward from 700 feet or more above the surface of the Earth.*

* * * * *

ANM OR E5 Tillamook, OR [Revised]

(Lat 45°25′07″N., long. 123°48′49″W.)

The airspace extending upward from 700 feet above the surface within the 7.5-mile radius of the Tillamook airport, and within 2.5 miles each side of the 334° bearing from the airport extending to 13.8 miles; and the airspace extending upward from 1,200 feet above the surface within the 30 mile radius of Lat 45°37′05″N., long. 123°56′36″W., extending clockwise from the 246° bearing to the 064° bearing, and within the 30 miles radius of Lat 45°39′57″N., long. 123°47′30″W., extending clockwise from the 064° bearing to the 154° bearing of Lat 45°37′05″N., long. 123°56′36″W., and within the 30 miles radius of Lat 45°34′11″N., long. 124°05′41″W., extending counterclockwise from the 244° bearing to the 154° bearing of

Lat 45°37′05″N., long. 123°56′36″W.; and excluding that airspace that extends more than 12 miles west of the U.S. shoreline; that airspace within Federal airways; the Astoria, OR; the Portland-Hillsboro; and the Portland, OR, Class E airspace areas.

* * * * *

Issued in Seattle, Washington, on October 30, 2000.

Charles E. Davis,

Acting Manager, Air Traffic Division, Northwest Mountain Region.

[FR Doc. 00–28988 Filed 11–9–00; 8:45 am]

BILLING CODE 4910–13–M

DEPARTMENT OF HOUSING AND URBAN DEVELOPMENT

24 CFR Part 100

[Docket No. FR 4597–P–01]

RIN 2529–AA89

Fair Housing Act Regulations Amendments Standards Governing Sexual Harassment Cases

AGENCY: Office of the Assistant Secretary for Fair Housing and Equal Opportunity, HUD.

ACTION: Proposed rule.

SUMMARY: This proposed rule would amend HUD's Fair Housing regulations to establish the standards the Department will use in sexual harassment cases.

DATES: Comment due date: January 12, 2001.

ADDRESSES: Interested persons are invited to submit comments regarding this proposed rule to the Rules Docket Clerk, Office of the General Counsel, Room 10276, Department of Housing and Urban Development, 451 Seventh Street, SW, Washington, DC 20410. Communications should refer to the above docket number and title. Facsimile (FAX) comments are not acceptable. A copy of each comment submitted will be available for public inspection and copying during regular business hours (7:30 a.m. to 5:30 p.m.) eastern time at the above address.

FOR FURTHER INFORMATION CONTACT: David H. Enzel, Deputy Assistant Secretary for Enforcement and Programs, Room 5204, Department of Housing and Urban Development, 451 Seventh Street, SW, Washington, DC 20410, telephone (202) 619–8046. (This is not a toll-free number). Individuals with hearing or speech impairments may access this number via TTY by calling the Federal Information Relay Service at (800) 877–8339 (This is a toll-free number).

SUPPLEMENTARY INFORMATION The Fair Housing Act (42 U.S.C. 3600–3620) (referred to as ''the Act'' in this rule) prohibits discrimination on the basis of sex. Sexual harassment related to housing has been uniformly recognized by courts as a form of discrimination based on sex and a violation of the Fair Housing Act. Sexual harassment may violate sections 804(a), 804(b), 804(c), 805, 806 or 818 under the Act. As the Department's current Fair Housing regulations do not address the standards to be applied in cases of sexual harassment, courts have looked to Title VII of the Civil Rights Act of 1964 (42 U.S.C. 2000 et. seq.) (Title VII), and associated case law and regulations for guidance in Fair Housing Act cases. (*See Grieger* v. *Sheets,* 1989 WL 38707 (N.D. Ill); see also *Henson* v. *City of Dundee,* 682 F.2d 897 (11th Cir. 1982); *Shellhammer* v. *Lewallen,* 770 F.2d 167 (6th Cir. 1985); *Honce* v. *Vigil,* 1 F.3d 1085 (10th Cir. 1993); *Beliveau* v. *Caras,* 873 F. Supp. 1393 (D. Cal. 1995); *Krueger* v. *Cuomo,* 115 F.3d 487 (7th Cir. 1997).) One court has expressed concern about the Department's lack of published standards concerning sexual harassment as a violation of the Act. (See *DiCenso* v. *Cisneros,* 96 F.3d 1004, 1007 (7th Cir. 1996)).

The Department is promulgating this proposed rule to provide guidance on key aspects of evaluating sexual harassment claims. In formulating the Department's position on sexual harassment, the Department carefully reviewed case law applying the Fair Housing Act, case law governing Title VII, and the Equal Employment Opportunity Commission's (EEOC) guidelines and policy statements.

Victims of sexual harassment at home lose their traditional place of refuge. ''When the harassment occurs in a woman's home, it is a complete invasion in her life. Ideally, the home is the haven from the troubles of the day, when home is not a safe place, a woman may feel distressed and often immobile.'' (Regina Cahan, *Home is No Haven: An Analysis of Sexual Harassment in Housing* 1987 Wis. L. Rev. 1061, 1072 (1987).) At least two courts have recognized that sexual harassment in the home may have more severe effects than harassment in the workplace. (*See Beliveau* v. *Caras,* 873 F. Supp. 1393, 1397 (C.D. Cal. 1995); *Williams* v. *Poretsky Management,* 955 F. Supp. 490, 497 (S.D. Md. 1996).)

Sexual harassment violates the prohibitions against discrimination on the basis of sex found in sections 804(a), 804(b), 804(c), 805, or 806 of the Act. Sexual harassment can also violate section 818 of the Act, which prohibits threatening, intimidating or coercive verbal or physical conduct that occurs because of an individual's membership in a protected class. Threatening, intimidating or coercive verbal or physical conduct, which occurs between neighbors or tenants, may constitute sexual harassment and, if so, the offending neighbor or tenant will be liable under section 818 of the Act.

There are two types of actionable sexual harassment claims: ''quid pro quo'' claims and ''hostile environment'' claims. There will be cases where the conduct in question may support both quid pro quo and hostile environment claims of sexual harassment.

Proposed § 100.500(a)(1)—Quid Pro Quo

A ''quid pro quo'' claim exists when submission to unwelcome sexual advances and requests for sexual favors is made a term or condition of housing related to the sale or rental of dwellings, the provision of services in connection therewith, or the availability of residential real estate-related transactions. Such a claim may be established if submission to or rejection of such conduct is used as the basis for decisions affecting the provision of housing or residential real estate-related transactions and related benefits or services. Generally, an individual asserting a quid pro quo claim of sexual harassment must establish the existence of an unwelcome demand for sexual favors based on the individual's sex and that the harassment adversely affected one or more terms, conditions, or privileges of housing or a residential real estate-related transaction or associated benefits or services.

Proposed § 100.500(a)(2)—Hostile Environment

A person creates a hostile environment when that person's unwelcome conduct is sufficiently severe or pervasive that it results in the creation of an environment that a reasonable person in the aggrieved person's position would find intimidating, hostile, offensive, or otherwise significantly less desirable. Generally, an individual asserting a hostile environment sexual harassment claim generally must establish that he or she was subjected to unwelcome verbal or physical conduct; the conduct was severe or pervasive; the conduct was based upon the individual's sex; and the conduct made the environment burdensome and significantly less desirable than if the conduct had not occurred.

Reasonable person standard. Whether conduct creates a hostile environment will be evaluated from the perspective

of a reasonable person in the aggrieved person's position. The perspective of a reasonable person in the aggrieved person's position is that of an ordinary person in like circumstances. The Department believes that the purpose and intent of the Act is best served by adhering to the reasonable person standard and adopts this standard for cases under the Act. This standard recognizes that men, as well as women, may be victims of sexual harassment. (*Oncale* v. *Sundowner Offshore Services, Inc.,* 523 U.S. 75 (1998).) This standard also recognizes that either opposite-sex or same-sex discrimination violates the Fair Housing Act if the challenged conduct occurred because of the victim's sex. (*Id.*)

The reasonable person standard is the perspective from which the victim's reaction to the harasser's conduct should be analyzed to determine whether an actionable sexual harassment claim exists. Use of the reasonable person standard to determine liability should not be confused with the standard used to determine appropriate damages to aggrieved persons in housing discrimination cases. It is a well-established principle in fair housing law that perpetrators of housing discrimination must take their victims as they find them; that is, damages are measured based on the injuries actually suffered by the victim, not on the injuries that would have been suffered by a reasonable person. (Alan W. Heifetz and Thomas C. Heinz, *Separating the Objective, the Subjective and the Speculative: Assessing Compensatory Damages in Fair Housing Adjudications,* 26 Marshall Law Review 3, 21 (1992).)

Proposed § 100.500(b)—Totality of the Circumstances

Whether any conduct in question constitutes sexual harassment in violation of the Act will depend on the totality of the circumstances involved in each particular situation on a case by case basis. (*Harris* v. *Forklift Systems, Inc.,* 510 U.S. 17, 22 (1993).) Critical factors to examine include, but are not limited to, the context, nature, severity, scope, frequency, duration, and location of the incidents, as well as the identity, number, relative ages and relationships of the persons involved.

This proposed regulation does not impose a quantitative requirement on the incidents of harassment that will constitute sexual harassment under the Act. (*Harris,* 510 U.S. at 22 ''[t]his is not * * * a mathematically precise test.'') A quantitative requirement unfairly penalizes the person who takes affirmative steps to avoid further harassment by avoiding the harasser. (*Gnerre* v. *Massachusetts Commission Against Discrimination,* 524 N.E. 2d 84, 89 (Mass. 1988).) A single incident of conduct may constitute unlawful sexual harassment.

Proposed § 100.500(c)—Unwelcome Conduct

As evidenced by case law, unwelcome verbal conduct without physical conduct may independently support a sexual harassment claim. (See e.g., Grieger, 1989 WL 38707 (N.D. Ill.).) Verbal conduct includes, but is not limited to, the use of sexual epithets. Since verbal harassment may by itself support a sexual harassment claim under the Act, it follows that proof of physical harm is not necessary to establish a sexual harassment claim.

An intentional touching of any part of the body may constitute unwelcome conduct. To establish that conduct is sexual harassment, it is not necessary that intentional physical conduct involve an intimate body part. Evidence of unwelcome conduct need not be sexual in nature to support a claim for sexual harassment. (*Id.**3 (citing cases from the Eighth, Tenth, and District of Columbia Circuits).)

Proposed § 100.500(d)—Liability

(1) A person is responsible for his or her acts.

(2) A person shall be vicariously liable for sexual harassment by his or her agents. An alleged perpetrator's responsibilities, duties and functions should be carefully examined to establish whether the perpetrator was acting in an agency capacity before determining whether a principal is liable. This principle is fully consistent with the Department's position on a principal's liability for the acts of agents. (See 24 CFR 103.20 (1999), and preamble to final rule implementing the Fair Housing Act Amendments of 1988, 54 FR 3232, 3260–3261, January 23, 1989.)

The duty of a property owner not to discriminate in the leasing or sale of property is non-delegable. (*Alexander* v. *Riga,* 208 F.3d 419, 432–434 (3rd Cir. 2000); *Walker* v. *Crigler,* 976 F.2d 900, 904 (4th Cir. 1992); *Marr* v. *Rife,* 503 F.2d 735, 741 (6th Cir. 1974); *City of Chicago* v. *Matchmaker Real Estate Sales Center, Inc.,* 982 F.2d 1086, 1096 (7th Cir. 1996); *Coates* v. *Bechtel,* 811 F.2d 1045, 1051 (7th Cir. 1987); *Phiffer* v. *Proud Parrot Motor Hotel, Inc.,* 648 F.2d 548 (9th Cir. 1980)). The Department invites comment on whether an affirmative defense, similar to the one that was created for employers by the Supreme Court in Title VII cases (*Burlington Industries, Inc.* v. *Ellerth,* 524 U.S. 742 (1998), and *Faragher* v. *City of Boca Raton,* 524 U.S. 775 (1998)) would be appropriate in the Fair Housing context. The Department also solicits comments on methods by which it can incorporate in the regulation provisions regarding training and other methods to educate individuals as to the prohibitions against sexual harassment under the Fair Housing Act.

(3) A person shall be responsible for acts of sexual harassment by third parties, where he or she, or his or her agent, knew or should have known of the conduct and failed to take immediate and appropriate corrective action, and had a duty to do so. (*Reeves* v. *Carrolsburg Condominium Unit Owners Association,* 1997 U.S. Dist. LEXIS 21762 *23; Cf. *Bradley* v. *Carydale Enterprises,* 707 F. Supp. 217 (E.D. VA 1989).) The duty to take corrective action may be established by leases, contracts, condominium by-laws and local ordinances. (*Reeves,* 1997 U.S. Dist., LEXIS 21762, *23.) Examples of third parties include tenants and independent contractors.

The Department solicits comments on other mechanisms that may create a duty to take corrective action and factors the Department should consider when determining whether such a duty exists.

Proposed § 100.500(e)—Other Related Conduct

When a housing-related opportunity or benefit is granted because of an individual's submission to sexual advances or requests for sexual favors, a person may be held liable for sexual harassment by other individuals who were qualified for and had a reasonable expectation of receiving an opportunity or benefit, but were denied. (Cf., *Broderick* v. *Ruder,* 685 F. Supp., 1269 (D.D.C. 1988).) For example, the manager of a housing complex with a long waiting list offers to move applicants to the top of the waiting list in exchange for sexual favors. Other applicants, even if they were not propositioned, but lost housing opportunities because of the manager's preferential treatment of others in exchange for sexual favors are aggrieved persons under the Fair Housing Act.

Proposed § 100.500(f)—Evidence of Psychological harm

Evidence relating to the relative mildness or severity of an aggrieved person's psychological harm is not relevant to whether a respondent has violated the Fair Housing Act's prohibition against sexual harassment.

(Harris, 510 U.S. 17 (1993)) Evidence of psychological harm may be considered in determining the proper amount of any money damages to which an aggrieved person may be entitled in compensation for emotional distress suffered.

Findings and Certifications

Executive Order 12866

The Office of Management and Budget (OMB) reviewed this rule under Executive Order 12866, *Regulatory Planning and Review,* and determined that this rule is a ''significant regulatory action'' as defined in section 3(f) of the Order (although not economically significant, as provided in section 3(f)(1) of the Order). Any changes made in this proposed rule subsequent to its submission to OMB are identified in the docket file, which is available for public inspection between 7:30 a.m. and 5:30 p.m. in the Office of the Rules Docket Clerk, Office of General Counsel, Room 1026, Department of Housing and Urban Development, 451 Seventh Street, SW., Washington, DC.

Regulatory Flexibility Act

The Secretary, in accordance with the Regulatory Flexibility Act (5 U.S.C. 605(b)), has reviewed this proposed rule before publication and by approving it certifies that this rule would not have a significant economic impact on a substantial number of small entities. This proposed rule would address sexual harassment in a housing or residential real estate-related transaction environment as a form of discrimination based on sex and a violation of the Fair Housing Act.

Environmental Impact

In accordance with 24 CFR 50.19(c)(3) of HUD's regulations, this proposed rule would set forth fair housing standards, and therefore is categorically excluded from the requirements of the National Environmental Policy Act of 1969 (42 U.S.C. 4321–4347).

Executive Order 13132, Federalism

This rule does not have Federalism implications and does not impose substantial direct compliance costs on State and local governments or preempt State law within the meaning of Executive Order 13132.

Unfunded Mandates Reform Act

Title II of the Unfunded Mandates Reform Act 1995 (Pub. L. 104–4; approved March 22, 1995) (UMRA) establishes requirements for Federal agencies to assess the effects of their regulatory actions on State, local, and tribal governments, and on the private sector. This rule would not impose any Federal mandates on any State, local, or tribal government, or on the private sector, within the meaning of the UMRA.

Catalog of Federal Domestic Assistance

The Catalog of Federal Domestic Assistance number is 14.400.

List of Subjects in 24 CFR Part 100

Aged, Fair Housing, Individuals with disabilities, Mortgages, Reporting and recordkeeping requirements.

Accordingly, 24 CFR part 100 is proposed to be amended as follows:

PART 100—DISCRIMINATORY CONDUCT UNDER THE FAIR HOUSING ACT

1. The authority citation for 24 CFR part 100 continues to read as follows:

Authority: 42 U.S.C. 3535(d), 3600–3620.

§ 100.65 Discrimination in terms, conditions and privileges and in services and facilities.

2. Section 100.65 is amended by removing paragraph (b)(5).

Subpart G—Prohibited Sexual Harassment

3. In part 100, a new subpart G that consists of new § 100.500 is added to read as follows:

§ 100.500 Prohibited sexual harassment.

(a) Sexual harassment can violate the prohibitions against discrimination on the basis of sex found in sections 804(a), 804(b), 804(c), 805, or 806 of the Act. Sexual harassment can also violate section 818 of the Act. There are two types of actionable sexual harassment claims:

(1) *Quid pro quo.* Unwelcome sexual advances, requests for sexual favors, and other verbal or physical conduct of a sexual nature constitute sexual harassment when submission to the conduct, either explicitly or implicitly, is made a term or condition relating to the sale or rental of dwellings, the provision of benefits or services in connection therewith, or the availability of residential real estate-related transactions.

(2) *Hostile environment.* Unwelcome sexual advances, requests for sexual favors, and other verbal or physical conduct constitute sexual harassment when the conduct has the effect of creating an environment which a reasonable person in the aggrieved person's position would consider intimidating, hostile, offensive, or otherwise significantly less desirable in connection with the sale or rental of dwellings, the provision of benefits or services in connection therewith, and the availability of residential real estate-related transactions. Proof of an adverse action is not necessary to create an actionable hostile environment claim.

(b) *Totality of the circumstances.* Whether any particular conduct constitutes sexual harassment will depend upon the totality of the circumstances, including the nature of the conduct and the context in which the incident(s) occurred. Critical factors to examine include, but are not limited to, the context, nature, severity, scope, frequency, duration, and location of the incidents, as well as the identity, number, relative ages and relationships of the persons involved. A single incident of conduct may constitute hostile environment sexual harassment.

(c) *Unwelcome conduct.* Unwelcome verbal conduct may include, but is not limited to, sexual epithets. Unwelcome physical conduct may include, but is not limited to, contact with an intimate body part.

(d) *Liability.* (1) A person is responsible for his or her acts.

(2) A person is vicariously liable to a victimized individual for sexual harassment by his or her agents.

(3) With respect to liability for sexual harassment by a third party, a person is responsible for acts of sexual harassment where the person, or his or her agents, knew or should have known of the third party's conduct and did not take immediate and appropriate corrective action and had a duty to do so.

(e) *Other related conduct.* When a housing-related opportunity or benefit is granted because of an individual's submission to sexual advances or requests for sexual favors, a person may be held liable by other individuals who were qualified for and had a reasonable expectation of receiving the opportunity or benefit, but were denied.

(f) *Evidence of psychological harm.* Evidence relating to the relative mildness or severity of an aggrieved person's psychological harm from such conduct is not relevant to a determination of whether a respondent violated the Act, but such evidence will be considered in determining the proper amount of any money damages to which an aggrieved person may be entitled in compensation for emotional distress suffered.

Dated: August 21, 2000.

Eva M. Plaza,

Assistant Secretary for Fair Housing and Equal Opportunity.

[FR Doc. 00–28892 Filed 11–9–00; 8:45 am]

BILLING CODE 4210–28–P

DEPARTMENT OF THE TREASURY

Bureau of Alcohol, Tobacco and Firearms

27 CFR Part 55

[Notice No. 906]

RIN 1512–AC25

Identification Markings Placed on Imported Explosive Materials (2000R–238P)

AGENCY: Bureau of Alcohol, Tobacco and Firearms (ATF), Department of the Treasury.

ACTION: Advance notice of proposed rulemaking.

SUMMARY: The Bureau of Alcohol, Tobacco and Firearms (ATF) is considering amending the regulations to require licensed importers to legibly identify by marking all imported explosive materials. Based on a petition we have received, we wish to gather information by inviting comments from the public and industry whether the regulations should be amended.

DATES: Comments must be received on or before January 12, 2001.

ADDRESSES: Send written comments to: Chief, Regulations Division; Bureau of Alcohol, Tobacco and Firearms; P.O. Box 50221; Washington, DC 20091–0221; *ATTN: Notice No. 906.* Written comments must be signed. Submit e-mail comments to: nprm@atfhq.atf.treas.gov. E-mail comments must contain your name, mailing address, and e-mail address. They must also reference this notice number and be legible when printed on not more than three pages 8½″ × 11″ in size. We will treat e-mail as originals and we will not acknowledge receipt of e-mail. See the Public Participation section of this document for alternative means of submitting written comments.

FOR FURTHER INFORMATION CONTACT: James P. Ficaretta, Regulations Division, Bureau of Alcohol, Tobacco and Firearms, 650 Massachusetts Avenue, NW., Washington, DC 20226 (202–927–8210).

SUPPLEMENTARY INFORMATION:

Background

The Bureau of Alcohol, Tobacco and Firearms (ATF) is responsible for implementing Title XI, Regulation of Explosives (18 U.S.C. Chapter 40), of the Organized Crime Control Act of 1970. One of the stated purposes of the Act is to reduce the hazards to persons and property arising from the misuse of explosive materials. Under section 847 of title 18, United States Code, the Secretary of the Treasury ''may prescribe such rules and regulations as he deems reasonably necessary to carry out the provisions of this chapter.'' Regulations that implement the provisions of chapter 40 are contained in title 27, Code of Federal Regulations (CFR), part 55.

Section 55.109 requires licensed manufacturers of explosive materials to legibly identify by marking all explosive materials manufactured for sale or distribution. The term ''explosive materials,'' as defined in section 55.11, means explosives, blasting agents, water gels and detonators. The term includes, but is not limited to, all items in the ''List of Explosive Materials'' provided for in section 55.23. Section 55.202 provides that there are three classes of explosive materials: (1) high explosives (e.g., dynamite, flash powders, and bulk salutes), (2) low explosives (e.g., black powder, safety fuses, igniters, igniter cords, fuse lighters, and display fireworks (except bulk salutes)), and (3) blasting agents (e.g., ammonium nitrate-fuel oil and certain water-gels).

The marks required by section 55.109 include the identity of the manufacturer and the location, date, and shift of manufacture. This section also provides that licensed manufacturers must place the required marks on each cartridge, bag, or other immediate container of explosive materials for sale or distribution, as well as on the outside container, if any, used for their packaging.

Exceptions to the marking requirements are provided in section 55.109(b). Licensed manufacturers of blasting caps are only required to place the required identification marks on the containers used for the packaging of blasting caps. In addition, the Director may authorize other means of identifying explosive materials upon receipt of a letter application from the licensed manufacturer showing that other identification is reasonable and will not hinder the effective administration of part 55. Finally, section 55.109(b) provides that the Director may authorize the use of other means of identification on fireworks instead of the required markings specified above.

Petition

The Institute of Makers of Explosives (IME) filed a petition with ATF, dated March 7, 2000, requesting an amendment of the regulations to require licensed importers to place the same identification marks on imported explosive materials that are currently required for explosive materials manufactured in the United States. As stated in the petition, the IME is the safety association of the commercial explosives industry. Its mission is to promote safety and the protection of employees, users, the public and the environment, and to encourage the adoption of uniform rules and regulations in the manufacture, transportation, storage, handling, use, and disposal of explosive materials used in blasting and other essential operations.

According to the petitioner, the commerce of explosives is a global enterprise and it expects the quantity of imports to increase over time. For example, the petitioner states that between 1994 and 1997, imports of cast boosters (high explosives) increased 14-fold to account for approximately 17 percent of all high explosives used annually in the U.S. The IME further states that while unmarked high explosives may have entered the United States over the years, it was not until last year that the association became aware of significant quantities of unmarked high explosives being imported into the country. The IME contends that by the end of 1999 about two million unmarked units had been distributed in the United States. The petitioner further states that many more thousands of tons of these high explosives are expected to be imported into the U.S. in the near future. Without a change in the regulations, the IME is concerned that these explosives will be entered into commerce in the U.S. without marks of identification, posing significant safety and security risks to the public. Although the IME has informed ATF that many of its member companies importing explosives into the U.S. mark their imported explosive materials in an effort to ensure traceability and accountability of the materials, it believes that all imported explosive materials should be appropriately identified. Therefore, it petitioned that the Federal explosives regulations be amended.

By letter dated August 2, 2000, the IME amended its petition to narrow the scope to importers of high explosives and blasting agents. The IME stated that it did not understand that the scope of its initial petition would apply to importers of products other than high explosives and blasting agents, i.e., low explosives. The IME noted that it has a specific standard that high explosives and blasting agents be marked with a date/plant/shift code.

Discussion

In an effort to protect the public from the misuse of explosive materials, ATF generally requires that explosives

manufacturers mark all explosive materials manufactured with specific information, including the name of manufacturer, and the location, date, and shift of manufacture. Generally, licensees and permittees must record the manufacturer's marks of identification on all explosives they receive. These requirements help ensure that explosive materials can be effectively traced for criminal enforcement purposes, i.e., the explosives can be tracked through the records kept by licensees and permittees. This process often provides valuable information in explosion and bombing investigations and is useful for inspection purposes in verifying inventory and proper conduct of business practices. However, the regulations do not require that imported explosive materials be marked. Therefore, we are requesting information and comments from interested persons on the desirability and feasibility of marking imported explosive materials.

Although ATF is soliciting comments on the following specific questions, we are also requesting any relevant information on the subject. 1. Should explosive materials imported into the United States contain identification markings?

2. Should all imported explosive materials be marked, or should certain classes of explosive materials, such as low explosives, be exempt? If you believe certain classes of explosives should be exempt from marking, please provide the reason(s) why such an exemption is consistent with public safety.

3. What identification marks, if any, are currently being placed on imported explosive materials?

4. What information should appear on imported explosive materials? ATF believes that the name and address of the importer, the name of the country in which the explosive materials were manufactured, and the date that the explosive materials were manufactured would be sufficient.

5. Assuming that any required identification marks must be placed on each cartridge, bag, or other immediate container of explosive materials that are imported, as well as on any outside container used for their packaging, is it feasible for a U.S. importer to place the required marks on foreign explosive materials?

6. How many importers would be affected by a requirement to place identification markings on foreign explosive materials?

7. Of those importers that would be affected by such a requirement, how many would be considered a ''small business concern'' as provided in the Small Business Act (15 U.S.C. 631, *et seq.*)?

8. What would be the cost burden imposed on importers for purchasing or leasing equipment for marking foreign explosive materials, including installation and operation?

9. What would the cost be for importers to contract with a foreign manufacturer to place the required marks on explosive materials on behalf of the importer?

Executive Order 12866

It has been determined that this advance notice is not a significant regulatory action as defined by Executive Order 12866. Accordingly, this advance notice is not subject to the analysis required by this Executive Order.

Public Participation

We are requesting comments on the petition from all interested persons. We are specifically requesting comments on the clarity of this advance notice and how it may be made easier to understand.

Comments received on or before the closing date will be carefully considered. Comments received after that date will be given the same consideration if it is practical to do so, but assurance of consideration cannot be given except as to comments received on or before the closing date.

ATF will not recognize any material in comments as confidential. Comments may be disclosed to the public. Any material that the commenter considers to be confidential or inappropriate for disclosure to the public should not be included in the comment. The name of the person submitting a comment is not exempt from disclosure.

You may submit written comments by facsimile transmission to (202) 927–8602. Facsimile comments must:

- Be legible;
- Reference this notice number;
- Be 8½″ × 11″ in size;
- Contain a legible written signature; and
- Be not more than three pages long.

We will not acknowledge receipt of facsimile transmissions. We will treat facsimile transmissions as originals.

Disclosure

Copies of the petition, this advance notice, and the comments received will be available for public inspection during normal business hours at: ATF Public Reading Room, Room 6480, 650 Massachusetts Avenue NW., Washington, DC.

Drafting Information

The author of this document is James P. Ficaretta, Regulations Division, Bureau of Alcohol, Tobacco and Firearms.

List of Subjects in Part 55

Administrative practice and procedure, Authority delegations, Customs duties and inspection, Explosives, Hazardous materials, Imports, Penalties, Reporting and recordkeeping requirements, Safety, Security measures, Seizures and forfeitures, Transportation, and Warehouses.

Authority and Issuance. This notice is issued under the authority of 18 U.S.C. 846 and 847.

Signed: September 8, 2000.

Bradley A. Buckles,

Director.

Approved: October 11, 2000.

John P. Simpson,

Deputy Assistant Secretary, Regulatory, Tariff and Trade Enforcement.

[FR Doc. 00–28979 Filed 11–9–00; 8:45 am]

BILLING CODE 4810–31–P

DEPARTMENT OF JUSTICE

Bureau of Prisons

28 CFR Part 552

[BOP–1107–P]

RIN 1120–AB06

Suicide Prevention Program

AGENCY: Bureau of Prisons, Justice.

ACTION: Proposed rule.

SUMMARY: In this document, the Bureau of Prisons proposes to revise its regulations on the suicide prevention program for clarity and to remove agency management procedures which do not need to be stated in regulations. We intend the revised regulations to provide for the health and safety of inmates.

DATES: Comments due by January 12, 2001.

ADDRESSES: Rules Unit, Office of General Counsel, Bureau of Prisons, HOLC Room 754, 320 First Street, NW., Washington, DC 20534.

FOR FURTHER INFORMATION CONTACT: Sarah Qureshi, Office of General Counsel, Bureau of Prisons, phone (202) 514–6655.

SUPPLEMENTARY INFORMATION: The Bureau of Prisons (Bureau) proposes to revise its regulations on the suicide prevention program (28 CFR part 552,

subpart E). Current regulations on this subject were published in the **Federal Register** on April 24, 1990 (55 FR 17355).

What Change Is the Bureau Making?

We are revising the regulations generally for clarity and to remove procedures relating to agency management. The revised regulations more clearly describe for the inmate how we identify and protect inmates at risk for suicide.

Why Is the Bureau Making This Change?

We are making this change to conform to the plain language initiative. Procedures relating to agency management are exempt from the rulemaking provisions of the Administrative Procedure Act (5 U.S.C. 553). Removing these procedures from the regulations allows us to speak more directly to inmates.

Revised § 552.40 more precisely states the purpose of our suicide prevention program and summarizes how we place inmates in and remove them from the program. Former §§ 552.41 through 552.43 are combined in a new § 552.41 which details the specific procedures we use to identify, refer, assess, and treat potentially suicidal inmates.

We combined provisions for the conditions of a suicide watch in former §§ 552.44, 552.46, and 552.48 in the new § 552.42. The revised regulations are more objective based. For example, the revised regulations require that rooms designated for housing an inmate on suicide watch must allow staff to maintain adequate control of the inmate without compromising the ability to observe and protect the inmate.

Previously, the regulations relied upon a more prescriptive approach of describing the location of the room (''. . . a non-administrative detention/segregation cell ordinarily in the health services area''). This prescriptive approach does not take into account recent developments in correctional facility design and construction, and has become unnecessarily restrictive.

Former §§ 552.45 and 552.49 addressed agency management procedures, and former § 552.47 affirms that a previously imposed sanction remains in effect for an inmate when that inmate is removed from a suicide watch. Because our regulations on inmate discipline sufficiently support that statement, we removed these three sections.

Who Does This Change Affect?

This regulation generally affects inmates in Bureau institutions.

How Can I Comment on the Proposed Change?

If you want to comment on this proposed rulemaking, you can submit data, views, or arguments in writing to the Rules Unit, Office of General Counsel, Bureau of Prisons, 320 First Street, NW., HOLC Room 754, Washington, DC 20534.

We will consider comments we receive during the comment period before we take final action. We will try to consider comments we receive after the comment period ends if we can.

All comments received remain on file for public inspection at the above address. We may change the proposed rule in light of the comments received. We do not expect to hold oral hearings on this rulemaking.

Executive Order 12866

This rule falls within a category of actions that the Office of Management and Budget (OMB) has determined not to constitute ''significant regulatory actions'' under section 3(f) of Executive Order 12866 and, accordingly, it was not reviewed by OMB.

Executive Order 13132

This regulation will not have substantial direct effects on the States, on the relationship between the national government and the States, or on distribution of power and responsibilities among the various levels of government. Therefore, under Executive Order 13132, we determine that this rule does not have sufficient federalism implications to warrant the preparation of a Federalism Assessment.

Regulatory Flexibility Act

The Director of the Bureau of Prisons, under the Regulatory Flexibility Act (5 U.S.C. 605(b)), reviewed this regulation and by approving it certifies that it will not have a significant economic impact upon a substantial number of small entities for the following reasons: This rule pertains to the correctional management of offenders committed to the custody of the Attorney General or the Director of the Bureau of Prisons, and its economic impact is limited to the Bureau's appropriated funds.

Unfunded Mandates Reform Act of 1995

This rule will not result in the expenditure by State, local and tribal governments, in the aggregate, or by the private sector, of $100,000,000 or more in any one year, and it will not significantly or uniquely affect small governments. Therefore, no actions were deemed necessary under the provisions of the Unfunded Mandates Reform Act of 1995.

Small Business Regulatory Enforcement Fairness Act of 1996

This rule is not a major rule as defined by section 804 of the Small Business Regulatory Enforcement Fairness Act of 1996. This rule will not result in an annual effect on the economy of $100,000,000 or more; a major increase in costs or prices; or significant adverse effects on competition, employment, investment, productivity, innovation, or on the ability of United States-based companies to compete with foreign-based companies in domestic and export markets.

Plain Language Instructions

We want to make Bureau documents easier to read and understand. If you can suggest how to improve the clarity of these regulations, call or write Sarah Qureshi at the telephone number or address listed above.

List of Subjects in 28 CFR Part 552

Prisoners.

Kathleen Hawk Sawyer,

Director, Bureau of Prisons.

Accordingly, under the rulemaking authority vested in the Attorney General in 5 U.S.C. 552(a) and delegated to the Director, Bureau of Prisons, we propose to amend 28 CFR part 552, chapter V, subchapter C, as follows.

SUBCHAPTER C—INSTITUTIONAL MANAGEMENT

PART 552—CUSTODY

1. The authority citation for 28 CFR part 552 continues to read as follows:

Authority: 5 U.S.C. 301; 18 U.S.C. 3621, 3622, 3624, 4001, 4042, 4081, 4082 (Repealed in part as to offenses committed on or after November 1, 1987), 5006–5024 (Repealed October 12, 1984, as to offenses committed after that date), 5039; 28 U.S.C. 509, 510; 28 CFR 0.95–0.99.

2. Revise subpart E to read as follows:

Subpart E—Suicide Prevention Program

Sec.
552.40 Purpose and scope.
552.41 Program procedures.
552.42 Suicide watch conditions.

Subpart E—Suicide Prevention Program

§ 552.40 Purpose and scope.

The Bureau of Prisons (Bureau) operates a suicide prevention program in order to assist staff in identifying and managing potentially suicidal inmates.

When staff identify an inmate as being at risk for suicide, staff will place the inmate on suicide watch. Based upon clinical findings, staff will either terminate the suicide watch when the inmate is no longer at imminent risk for suicide or arrange for the inmate's transfer to a medical referral center or contract health care facility.

§ 552.41 Program procedures.

(a) *Program Coordinator.* Each institution must have a Program Coordinator for the institution's suicide prevention program.

(b) *Training.* The Program Coordinator is responsible for ensuring that appropriate training is available to staff and to inmates selected as inmate observers.

(c) *Identification of at-risk inmates.* (1) Medical staff are to screen a newly admitted inmate for signs that the inmate is at risk for suicide. Ordinarily, this screening is to take place within twenty-four hours of the inmate's admission to the institution.

(2) Staff (whether medical or non-medical) may make an identification at any time based upon the inmate's observed behavior.

(d) *Referral.* Staff who identify an inmate to be at risk for suicide will have the inmate placed on suicide watch.

(e) *Assessment.* A psychologist will clinically assess each inmate placed on suicide watch.

(f) *Intervention.* Upon completion of the clinical assessment, the Program Coordinator or designee will determine the appropriate intervention that best meets the needs of the inmate.

§ 552.42 Suicide watch conditions.

(a) *Housing.* Each institution must have one or more rooms designated specifically for housing an inmate on suicide watch. The designated room must allow staff to maintain adequate control of the inmate without compromising the ability to observe and protect the inmate.

(b) *Observation.* (1) Staff or trained inmate observers operating in scheduled shifts are responsible for keeping the inmate under constant observation.

(2) Only the Warden may authorize the use of inmate observers.

(3) Inmate observers are considered to be on an institution work assignment when they are on their scheduled shift.

(c) *Suicide watch log.* Observers are to document significant observed behavior in a log book.

(d) *Termination.* Based upon clinical findings, the Program Coordinator or designee will:

(1) Remove the inmate from suicide watch when the inmate is no longer at imminent risk for suicide, or

(2) Arrange for the inmate's transfer to a medical referral center or contract health care facility.

[FR Doc. 00–28905 Filed 11–9–00; 8:45 am]

BILLING CODE 4410–05–U

DEPARTMENT OF LABOR

Occupational Safety and Health Administration

29 CFR Part 1956

[Docket No. T–034]

RIN 1218–AB98

Notice of the Submission of the New Jersey State Plan for Public Employees Only; Proposal To Grant Initial State Plan Approval; Request for Public Comment and Opportunity To Request Public Hearing

AGENCY: Occupational Safety and Health Administration, Department of Labor (OSHA).

ACTION: Proposed rule: Initial State Plan approval; request for written comments; notice of opportunity to request informal public hearing.

SUMMARY: This document gives notice of the submission by the New Jersey Department of Labor of a State occupational safety and health plan, applicable only to public sector employment (employees of the State and its political subdivisions), for determination of initial approval under section 18 of the Occupational Safety and Health Act of 1970 (the ''Act''). OSHA is seeking written public comment on whether or not initial State plan approval should be granted and offers an opportunity to interested persons to request an informal public hearing on the question of initial State plan approval.

Approval of the New Jersey Public Employee Only State plan will be contingent upon a determination that the plan meets OSHA's plan approval criteria and the availability of funding as contained in the Department of Labor's Fiscal Year 2001 budget, which is currently pending final Congressional and Executive action.

DATES: Written comments or requests for a hearing must be received by December 13, 2000.

ADDRESSES: Written comments or request for a hearing should be submitted in duplicate, to the Docket Officer, Docket T–034, U.S. Department of Labor, Room N2625, 200 Constitution Avenue, NW., Washington, DC 20210, telephone (202) 693–2350. Comments limited to 10 pages or fewer may also be transmitted by FAX to: (202) 693–1648, provided that the original and one copy of the comments are sent to the Docket Office immediately thereafter. Electronic comments may be submitted on the Internet at: *http://ecomments.osha.gov/.*

FOR FURTHER INFORMATION CONTACT: Bonnie Friedman, Director, Office of Information and Consumer Affairs, Occupational Safety and Health Administration, U.S. Department of Labor, Room N–3637, 200 Constitution Avenue, NW., Washington, DC 20210; telephone (202) 693–1999.

SUPPLEMENTARY INFORMATION:

A. Background

Section 18 of the Occupational Safety and Health Act of 1970 (the ''Act'') 29 U.S.C. 667 provides that a State which desires to assume responsibility for the development and enforcement of standards relating to any occupational safety and health issue with respect to which a Federal standard has been promulgated may submit a State plan to the Assistant Secretary of Labor for Occupational Safety and Health (''Assistant Secretary'') documenting in detail the proposed program. Regulations promulgated pursuant to the Act at 29 CFR part 1956 provide that a State may submit a State plan for the development and enforcement of occupational safety and health standards applicable only to employees of the State and its political subdivisions (''public employees''). Under these regulations the Assistant Secretary will approve a State plan for public employees if the plan provides for the development and enforcement of standards relating to hazards in employment covered by the plan which are or will be at least as effective in providing safe and healthful employment and places of employment for public employees as standards promulgated and enforced under section 6 of the Federal Act, giving due consideration to differences between public and private sector employment. In making this determination the Assistant Secretary will consider, among other things, the criteria and indices of effectiveness set forth in 29 CFR part 1956, Subpart B.

B. New Jersey State Plan History

In 1973, the New Jersey Department of Labor and Industry obtained OSHA approval of a State plan for the enforcement of occupational safety and health standards covering private sector workplaces as well as a program for

public employees in New Jersey. That plan was approved by the Assistant Secretary on January 22, 1973 (37 FR 2426); 29 CFR 1952.140 *et seq.*). That plan was subsequently withdrawn by the State of New Jersey effective June 30, 1975, after the State was unable to gain enactment of the necessary State OSHA legislation (40 FR 27655).

In 1984, the New Jersey State Legislature passed the New Jersey Public Employees Occupational Safety and Health (PEOSH) Act, which was signed into law by the Governor, and which provided the basis for establishing a comprehensive occupational safety and health program applicable to the public employees in the State.

The State formally submitted for Federal approval a plan applicable only to public employees in February 1988. OSHA's review findings were detailed in an October 1988 letter to then New Jersey Labor Commissioner Charles Serraino. OSHA determined that the New Jersey statute, as structured, and the proposed State plan presented several obstacles to meeting Federal State plan approval criteria.

A revised plan was submitted by the State on February 19, 1992. On March 27, 1992, in a letter to former New Jersey State Labor Commissioner Raymond L. Bramucci, OSHA informed the State of its latest findings, identifying areas of the proposed plan which needed to be addressed or needed clarification. Amended enabling legislation was signed into law by Governor Christine Todd Whitman on July 25, 1995, to conform the proposed State plan to OSHA requirements. On October 11, 1995, former New Jersey State Labor Commissioner Peter J. Calderone submitted a newly revised PEOSH State plan which OSHA determined was conceptually approvable as a developmental State plan, but which could not be approved until Congress appropriated additional Federal matching grant funds for a new State plan under section 23(g) of the OSHAct. On August 1, 2000, current New Jersey Commissioner of Labor, Mark B. Boyd, and Commissioner of Health and Senior Services, Christine Grant, submitted a further revised plan document, with final amendments submitted on September 1, 2000.

The Act provides for funding ''up to 50%'' of the State plan costs, but longstanding language in OSHA's appropriation legislation further provides that OSHA must fund ''* * * no less than 50% of the costs required to be incurred'' by an approved State plan. The Department of Labor's Fiscal Year 2000 budget request included additional section 23(g) grant funds to allow approval of the New Jersey State plan. However, the requested funds were not included in OSHA's final FY 2000 Congressional appropriation. The Department of Labor's Fiscal Year 2001 budget, which is pending final Congressional and Executive action, again requests funding to allow approval of the New Jersey State plan.

After an opportunity for public comment, and contingent upon the availability of additional section 23(g) grant funds, the Assistant Secretary of Labor will approve the New Jersey State plan if it is determined that the plan meets the criteria set forth in the Occupational Safety and Health Act of 1970 and applicable regulations at 29 CFR part 1956, Subpart B. The approval of a State plan for public employees in New Jersey is not a significant regulatory action as defined in Executive Order 12866.

C. Description of the New Jersey State Plan

The plan designates the New Jersey Department of Labor as the State agency responsible for administering the plan throughout the State. The plan includes legislation, the Public Employees Occupational Safety and Health Act (the ''State Act,'' N.J.S.A. 34:6A–25 *et seq.*), passed by the New Jersey legislature in 1995. Under that legislation, the New Jersey Commissioner of Labor has full authority to adopt standards and enforce and administer all laws and rules protecting the safety and health of employees of the State and its political subdivisions. The State Commissioner of Labor and the State Commissioner of Health and Senior Services are both responsible for conducting inspections within their jurisdictional areas. (Although health inspections will be conducted by the New Jersey State Department of Health and Senior Services, all enforcement actions will be initiated by the State Department of Labor.) New Jersey has adopted State standards identical to Federal occupational safety and health standards promulgated as of December 7, 1998, with differences only in its hazard communication and fire protection standards. The State plan includes a commitment to bring those standards into conformance with OSHA requirements and to update all standards within one year after plan approval. The State plan also provides that future OSHA standards and revisions will be adopted by the State in accordance with 29 CFR 1953.21. The plan also includes provisions for the granting to public employers of permanent and temporary variances from State standards in terms substantially similar to the variance provisions contained in the Federal Act. The State provisions require employee notification of variance applications as well as employee rights to participate in hearings held on variance applications. Variances may not be granted unless it is established that adequate protection is afforded employees under the terms of the variance. Section 6A–35 of the State Act (N.J.S.A. 34) provides for inspections of covered workplaces including inspections in response to employee complaints. If a determination is made that an employee complaint does not warrant an inspection, the complainant will be notified, in writing, of such determination and afforded an opportunity to seek informal review of the determination. Additionally, section 6A–35 of the State Act provides the opportunity for employer and employee representatives to accompany an inspector during an inspection for the purpose of aiding in the inspection.

The plan provides for notification to employees of their protections and obligations under the plan by such means as a State poster, and required posting of notices of violation. Section 6A–45 of the State Act provides for protection of employees against discharge or discrimination resulting from exercise of their rights under the State Act in terms essentially identical to section 11(c) of the Federal Act. lieu of first-instance monetary penalties, the plan provides a scheme of enforcement for compelling compliance under which public employers are issued notices of violations and orders to comply, for any violation of standards and orders. Such notices must allow a reasonable abatement period. Public employers, employees and other affected parties may seek informal review of the notice of violation with the New Jersey Department of Labor, including the reasonableness of the abatement period, and/or may seek formal administrative review with the New Jersey Department of Labor's Occupational Safety and Health Review Commission. Judicial review of the decision of the Review Commission may be sought at the Appellate Division of the Superior Court. The PEOSH Act further mandates a system of monetary penalties as its primary enforcement mechanism for failures to comply with an Order of the Commissioner of Labor and willful violations pursuant to section 6A–41d. The prescribed penalty amounts are up

to $7,000 per day for failure to abate violations and up to $70,000 for willful violations. Such penalties are also subject to administrative review and subsequent judicial appeal.

The plan also includes provisions for right of entry for inspection, prohibition of advance notice of inspection and employers' obligations to maintain records and provide reports as required. The plan further provides assurances of a fully trained, adequate staff, including 20 safety and 7 health compliance officers for enforcement inspections, and 4 safety and 3 health consultants to perform consultation services in the public sector, and 2 safety and 3 health training and education staff. 29 CFR 1956.10(g) requires that State plans for public employees provide a sufficient number of adequately trained and qualified personnel necessary for the enforcement of standards. The compliance staffing requirements (or benchmarks) for State plans covering both the private and public sectors are established based on the ''fully effective'' test established in *AFL–CIO* v. *Marshall,* 570 F.2d 1030 (D.C. Cir., 1978). This staffing test, and the complicated formula used to derive benchmarks for complete private/public sector plans, is not intended, nor is it appropriate, for application to the staffing needs of public employee only plans. However, the State has given satisfactory assurance in its plan that it will meet the staffing requirements of 29 CFR 1956.10. The State has also given satisfactory assurances of adequate State matching funds to support the plan and is requesting initial Federal funding of $1,771,000.

Although the State Act sets forth the general authority and scope for implementing the New Jersey Public Employees Occupational Safety and Health (PEOSH) Plan, the plan is developmental under the terms of 29 CFR 1956.2(b), in that specific rules and regulations must still be adopted to carry out the plan and make it fully operative. The plan sets forth a timetable for the accomplishment of these and other developmental goals. This timetable addresses such general areas as the development or revision of regulations governing enforcement, consultation, and variances. Other developmental aspects include hiring and training of staff, obtaining laboratory services, development of a Field Operations Manual and other implementing policies and procedures, and adoption of various forms, procedures, and instructions.

D. Location of the Plan for Inspection and Copying

A copy of the plan may be inspected and copied during normal business hours at the following locations:

Docket Office, Docket T–034, U.S. Department of Labor, Occupational Safety and Health Administration, 200 Constitution Avenue, NW., Room N–2625, Washington, DC 20210;

Office of the Regional Administrator, U.S. Department of Labor, Occupational Safety and Health Administration, 201 Varick Street, Room 670, New York, New York 10014;

New Jersey Department of Labor, Division of Public Safety and Occupational Safety and Health, Office of Public Employees' Safety, P.O. Box 386, 225 East State Street, 8th Floor West, Trenton, New Jersey 08625–0386.

E. Request for Public Comment and Opportunity To Request Hearing

Public comment on the New Jersey Public Employees Occupational Safety and Health (PEOSH) Plan is hereby requested. Interested persons are invited to submit written data, views, and comments with respect to this proposed initial State plan approval. These comments must be received on or before December 13, 2000 and submitted in duplicate to the Docket Officer, Docket No. T–034, U.S. Department of Labor, Room N–2625, 200 Constitution Avenue NW., Washington, DC 20210. Written submissions must clearly identify the issues which are addressed and the positions taken with respect to each issue. Comments limited to 10 pages or fewer may also be transmitted by FAX to: (202) 693–1648, provided that the original and one copy of the comment are sent to the Docket Office immediately thereafter. Electronic comments may be submitted on the Internet at: *http://ecomments.osha.gov/*. The State of New Jersey will be afforded the opportunity to respond to each submission. The New Jersey Department of Labor must also publish appropriate notice within the State of New Jersey within 5 days of publication of this notice, announcing OSHA's proposal to approve a New Jersey State Plan for Public Employees Only, contingent on the availability of appropriated funds, and giving notice of the opportunity for public comment.

Pursuant to 29 CFR 1902.39(f), interested persons may request an informal hearing concerning the proposed initial State plan approval. Such requests also must be received on or before December 13, 2000 and should be submitted in duplicate to the Docket Officer, Docket T–034, at the address noted above. Such requests must present particularized written objections to the proposed initial State plan approval. The Assistant Secretary will decide within 30 days of the last day for filing written views or comments and requests for a hearing whether the objections raised are substantial and, if so, will publish notice of the time and place of the scheduled hearing.

The Assistant Secretary will, within a reasonable time after the close of the comment period or after the certification of the record if a hearing is held, publish his decision in the **Federal Register**. All written and oral submissions, as well as other information gathered by OSHA, will be considered in any action taken. The record of this proceeding, including written comments and requests for hearing and all materials submitted in response to this notice and at any subsequent hearing, will be available for inspection and copying in the Docket Office, Room N–2625, at the previously mentioned address, between the hours of 8:15 a.m and 4:45 p.m.

F. Regulatory Flexibility Act

OSHA certifies pursuant to the Regulatory Flexibility Act of 1980 (5 U.S.C. 601 *et seq.*) that the proposed initial approval of the New Jersey State Plan will not have a significant economic impact on a substantial number of small entities. By its own terms, the plan will have no effect on private sector employment, but is limited to the State and its political subdivisions. Moreover, the New Jersey legislation has been in effect since 1984, when the State first established a safety and health program for State and local government employees. Since that time, the New Jersey program has been in operation with State funding and most public sector employers in the State, including small units of local government, have been subject to its terms. Compliance with State OSHA standards is required by State law; Federal approval of a State plan imposes regulatory requirements only on the agency responsible for administering the State plan. Accordingly, no new obligations would be placed on public sector employers as a result of Federal approval of the plan.

G. Federalism

Executive Order 13132, ''Federalism,'' emphasizes consultation between

Federal agencies and the States and establishes specific review procedures the Federal government must follow as it carries out policies which affect state or local governments. OSHA has consulted extensively with New Jersey throughout the development, submission and consideration of its proposed State plan. Although OSHA has determined that the requirements and consultation procedures provided in Executive Order 13132 are not applicable to initial approval decisions under the Act, which have no effect outside the particular State receiving the approval, OSHA has reviewed the New Jersey initial approval decision proposed today, and believes it is consistent with the principles and criteria set forth in the Executive Order.

H. Authority

This document was prepared under the direction of Charles N. Jeffress, Assistant Secretary of Labor for Occupational Safety and Health. It is issued under section 18 of the OSH Act (29 U.S.C. 667), 29 CFR part 1902, and Secretary of Labor's Order No. 3–2000 (65 FR 50017).

Signed at Washington, DC this 6th day of November 2000.

Charles N. Jeffress,

Assistant Secretary of Labor.

[FR Doc. 00–28998 Filed 11–9–00; 8:45 am]

BILLING CODE 4510–26–P

ENVIRONMENTAL PROTECTION AGENCY

40 CFR Parts 52 and 81

[MI74–7282b; FRL–6896–4]

Approval and Promulgation of State Implementation Plans; Michigan

AGENCY: Environmental Protection Agency.

ACTION: Notice of proposed rulemaking.

SUMMARY: The Environmental Protection Agency (EPA) is proposing to adjust the applicability date for reinstating the 1-hour ozone National Ambient Air Quality Standard (NAAQS) in Genesee, Bay, Midland, and Saginaw Counties, Michigan and is proposing on a determination that these areas have attained the 1-hour ozone NAAQS. This determination is based on 3 consecutive years of complete, quality-assured, ambient air monitoring data for the 1997–1999 ozone seasons that demonstrate that the areas have attained the ozone NAAQS. On the basis of this determination, EPA is also proposing that certain attainment demonstration requirements, and certain related requirements of part D of subchapter I of the Clean Air Act (CAA), do not apply to Genesee, Bay, Midland, and Saginaw Counties.

EPA is also proposing to approve the State of Michigan's request to redesignate Genesee, Bay, Midland, and Saginaw Counties to attainment for the 1-hour ozone NAAQS. Michigan submitted the redesignation request for these areas on May 9, 2000. EPA is also proposing to approve the State's plan for maintaining the 1-hour ozone standard for the next 10 years as a revision to the Michigan State Implementation Plan (SIP).

In the final rules section of this **Federal Register**, EPA is approving the State's request as a direct final rule without prior proposal because EPA views this action as noncontroversial and anticipates no adverse comments. A detailed rationale for approving and disapproving portions of the State's request is set forth in the direct final rule. The direct final rule will become effective without further notice unless the Agency receives relevant adverse written comment on this proposed rule within 30 days of this publication. Should EPA receive adverse comment, it will publish a document informing the public that the direct final rule will not take effect and that EPA will address adverse comments in a subsequent final rule based on this proposed rule. If EPA does not receive adverse comments, the direct final rule will take effect on the date stated in that document and EPA will not take further action on this proposed rule. EPA does not plan to institute a second comment period on this action. Any parties interested in commenting on this document should do so at this time.

DATES: EPA must receive written comments by December 13, 2000.

ADDRESSES: Send written comments to: Carlton T. Nash, Chief, Regulation Development Section, Air Programs Branch (AR–18J), United States Environmental Protection Agency, 77 West Jackson Boulevard, Chicago, Illinois 60604.

FOR FURTHER INFORMATION CONTACT: John Mooney at (312) 886–6043.

SUPPLEMENTARY INFORMATION: For additional information see the direct final rule published in the rules section of this **Federal Register**. Copies of the documents relevant to this action are available for public inspection during normal business hours at the above address. (Please telephone John Mooney at (312) 886–6043 before visiting the Region 5 Office.)

Authority: 42 U.S.C. 7401–7671 *et seq.*

Dated: October 26, 2000.

Francis X. Lyons,

Regional Administrator, Region 5.

[FR Doc. 00–28806 Filed 11–9–00; 8:45 am]

BILLING CODE 6560–50–U

FEDERAL COMMUNICATIONS COMMISSION

47 CFR Parts 32, 43 and 64

[CC Docket No. 00–199; FCC 00–364]

2000 Biennial Regulatory Review—Comprehensive Review of the Accounting Requirements and ARMIS Reporting Requirements for Incumbent Local Exchange Carriers: Phase 2 and Phase 3

AGENCY: Federal Communications Commission.

ACTION: Notice of proposed rulemaking.

SUMMARY: In this document the Commission is initiating Phase 2 and Phase 3 of the 2000 Biennial Regulatory Review—Comprehensive Accounting and ARMIS review. This Notice of Proposed Rulemaking (NPRM), will examine long-term changes need as new technologies impact the provision of telecommunications services and as local exchange markets become competitive.

DATES: Interested parties may file comments on the Phase 2 section of the NPRM on or before December 21, 2000, and reply comments on or before January 30, 2001; Phase 3 comments may be filed on or before January 30, 2001 and reply comments on or before February 28, 2001. Written comments must be submitted by the Office of Management and Budget (OMB) on the proposed and/or modified information collections on or before January 12, 2001.

ADDRESSES: Federal Communications Commission, 445 12th Street, SW, TW–A325, Washington, DC 20554. In addition to filing comments with the Office of the Secretary, a copy of any comments on the information collections contained herein should be submitted to Judy Boley, Federal Communications Commission, Room 1–C804, 445 12th Street, SW, Washington, DC 20554, or via the Internet to *jboley@fcc.gov*; and to Edward C. Springer, OMB Desk Officer, 10236 NEOB, 725 17th Street, NW., Washington, DC 20503 or via the Internet to *Edward.Springer@omb.eop.gov.*

FOR FURTHER INFORMATION CONTACT: Mika Savir, Accounting Safeguards

Division, Common Carrier Bureau, at (202) 418–0384 or JoAnn Lucanik, Accounting Safeguards Division, Common Carrier Bureau, at (202) 418–0873.

For additional information concerning the information collections contained in this document, contact Judy Boley at 202–418–0214, or via the Internet at *jboley@fcc.gov*.

SUPPLEMENTARY INFORMATION: This is a synopsis of the Commission's Notice of Proposed Rulemaking, CC Docket No. 00–199, FCC 00–364, adopted October 12, 2000 and released October 18, 2000. The full text of this Commission NPRM is available for inspection and copying during normal business hours in the FCC Reference Center (CY–A257), 445 12th Street, SW, Washington, DC. The complete text of this NRPM may also be purchased from the Commission's copy contractor, International Transcription Service, Inc., 1231 20th Street, NW., Washington, DC 20036.

This NPRM contains proposed information collections subject to the Paperwork Reduction Act of 1995 (PRA). It has been submitted to the Office of Management and Budget (OMB) for review under the PRA. OMB, the general public, and other Federal agencies are invited to comment on the proposed information collections contained in this proceeding.

Paperwork Reduction Act

This NPRM contains a proposed information collection. The Commission, as part of its continuing effort to reduce paperwork burdens, invites the general public and the Office of Management and Budget (OMB) to comment on the information collections contained in this NPRM, as required by the Paperwork Reduction Act of 1995, Public Law 104–13. Public and agency comments are due at the same time as other comments on this NPRM; OMB notification of action is due January 12, 2001.

Comments should address: (a) Whether the proposed collection of information is necessary for the proper performance of the functions of the Commission, including whether the information shall have practical utility; (b) the accuracy of the Commission's burden estimates; (c) ways to enhance the quality, utility, and clarity of the information collected; and (d) ways to minimize the burden of the collection of information on the respondents, including the use of automated collection techniques or other forms of information technology.

OMB Control Number: None.

Title: 2000 Biennial Regulatory Review—Comprehensive Review of the Accounting Requirements and ARMIS Reporting Requirements for Incumbent Local Exchange Carriers: Phase 2 and Phase 3, CC Docket No. 00–199.

Form No.: FCC Reports 43–01, 43–02, 43–03, 43–04, 43–05, 43–07, 43–08, 495A and 495B.

Type of Review: New collection.

Respondents: Business or other for-profit.

Title	No. of respondents	Estimated hours per response*	Total annual burden
Part 32—Uniform Systems of Accounts (Class A recordkeepers only)	30	33,383	1,001,490
Implementation of the Telecommunications Act of 1996 Accounting Safeguards Under The Telecommunications Act of 1996 (Affiliate Transaction Only)	20	24	480
Sections 64.901–64.903, Allocation of Cost, Cost Allocations Manual	5	600	3,000
Section 64.904, Independent Audits	5	250	1,250
ARMIS Annual Summary Report: FCC Report 43–01	29	115	3,335
ARMIS Uniform System of Accounts: FCC Report 43–02	30	430	12,900
ARMIS Service Quality Report: FCC Report 43–05	12	**855	10,264
ARMIS Infrastructure Report: FCC Report 43–07	7	370	2,590
ARMIS Joint Cost Report: FCC Report 43–03	93	83	7,719
ARMIS Access Report: FCC Report 43–04	93	601	55,893
ARMIS Operating Data Report: FCC Report 43–08	53	129	6,837
Forecast of Investment & Actual Usage Reports: FCC Reports 495A & B	186	40	7,440

*These are the estimated hours if all the proposals are adopted in a Report and Order.
**Includes recordkeeping requirement.

Total Annual Burden: 1,113,198 hours.

Cost to Respondents: $65,000–$1,200,000.

Needs and Uses: In CC Docket No. 00–199, the Commission seeks comment on streamlining its part 32 chart of accounts, modifying its affiliate transactions rules, and revising its expense limits rules. In addition, the NPRM seeks comment on streamlining the accounting and reporting requirements specifically for mid-sized carriers by eliminating mandatory CAM filing and CAM audits for these carriers. The NPRM seeks comment on the modification of all ARMIS reports, except FCC Report 43–06. The information is needed so that the Commission can fulfill its statutory responsibilities and obligations.

Synopsis of Notice of Proposed Rulemaking

In this item, we commence Phase 2, to seek comment on further accounting and reporting reform measures that may be implemented in the near term; and Phase 3, to consider the appropriate indicia for more significant deregulation in this area.

Commencement of Phase 2, that is also part of our biennial regulatory review process, is particularly appropriate at this time given the recent changes in the telecommunications industry and recent changes in regulatory requirements for the largest incumbent LECs.

In 1999, we initiated this comprehensive review proceeding to examine further reform measures and announced a two-phased approach that would address immediate and long-term reform. We adopted a number of immediate reform measures in our *Phase 1 Report and Order,* 65 FR 16328 (March 28, 2000). We realize now that further immediate reform measures may be warranted at this time, as we consider long-range reform. Thus, in Phase 2, we seek comment on immediate accounting and reporting reform measures that are appropriate now, and in Phase 3, we seek comment on appropriate indicia for more significant deregulation in this area. Our actions to implement immediate reforms will not slow down our long-range plans for accounting and reporting deregulation. We envision that Phase 2 and Phase 3 will proceed concurrently. Accordingly, we seek comment on both

immediate and long-term reform measures.

During this comprehensive review, we have worked closely with the National Association of Regulatory Utility Commissioners (NARUC), state commissions, and the industry. We are also working with the states to eliminate overlap of federal and state reporting requirements, as well as eliminating unnecessary reporting requirements. Under section 220(i) of the Communications Act, the Commission must notify the state commissions before modifying the chart of accounts and must allow the states a reasonable opportunity to present their views. Even without this statutory requirement, we recognize the state commissions' significant expertise with accounting and cost allocation issues and would invite their recommendations.

In the following sections, we set forth proposals for the second phase of our comprehensive review and seek comment on streamlining accounting rules and ARMIS reporting requirements for Class A carriers. We also set forth a separate proposal for streamlining our accounting and reporting requirements specifically for mid-size carriers. In addition to commenting on these proposals, commenters are encouraged to propose any additional recommendations for action. In the third phase of our comprehensive review, we seek comment on specific issues and long-term proposals as we continue to move to a more deregulatory environment.

A. Part 32 Accounting Rules

In this NPRM, we seek comment on further revising our part 32 chart of accounts, our affiliate transactions rules, and our expense limits rules.

1. Chart of Accounts

In this NPRM, we seek comment on modifications to the Uniform System of Accounts to reduce burdens on Class A carriers. We propose retaining the current Class B account structure for the incumbent LECs currently reporting at the Class B level. We seek comment on specific proposals from both the industry and the states to streamline and modify the USOA. Specifically, USTA has requested that we uniformly adopt Class B accounting for all carriers. USTA contends that Class A accounting is not needed for jurisdictional separations, price caps, or universal service mechanisms. The states, in contrast, have asked us to add additional accounts to track information for various purposes. USTA also proposes that we eliminate several subaccounts and Jurisdictional Difference Accounts that Class B carriers currently must report. USTA contends that carriers should not be required to maintain subaccounts or subsidiary records that are not necessary to meet business requirements. In addition, USTA contends that the Jurisdictional Difference Accounts are not needed because they are not used for federal regulatory oversight and the information in these accounts is also provided to the states. We seek comment on these proposals.

In considering USTA's request to use Class B accounts for all carriers, we have found many instances where Class B accounting would appear to meet the Commission's data needs. We agree with USTA that fewer prescribed accounts such as we now require for Class B carriers would reduce the carriers' regulatory reporting burdens. Therefore, we propose to eliminate approximately one-fourth of the current Class A accounts. Based on our examination of the various accounts, we believe there is no continuing need for carriers to record their costs in these accounts. We seek comment on whether eliminating these accounts would undermine our ability to meet our statutory mission.

We also seek comment on the remaining three-fourths of Class A accounting. In particular, we seek comment on the impact of eliminating the Class A account structure for network plant and related asset and expense accounts, and how that would affect our ongoing mission. We seek comment on whether using Class B accounting for all carriers would provide sufficient information for our purposes. Commenters should address the impact this rule modification would have on universal service mechanisms and anything else they deem relevant. For example, we note that there may be a continuing need for network plant and related accounts at the Class A level in order to maintain and use the universal service model we utilize in administering the universal service high cost fund for non-rural carriers. For instance, Class A accounting requires that switching equipment be accounted for by technology (*i.e.*, analog electronic switching, digital electronic switching, and electro-mechanical switching) whereas Class B combines all switching technologies in one account. The universal service high cost model currently determines the cost of providing digital switching equipment using Class A central office equipment accounts. We seek comment on how we could avoid serious distortions in the digital switching cost estimates if all types of switching equipment were combined as they are in Class B accounts.

In addition, Class A accounting data may be used by the states on a comparative basis in state UNE pricing proceedings. We seek comment on the prevalence and frequency of such state use. Commenters should also address whether states could find or develop alternative sources of data for this purpose. Part 32 organizes telecommunications costs in a manner that allows a logical mapping of these costs to telecommunications rate structures. Switching costs, for example, currently are tracked separately from transport costs under our part 32 rules. This cost distinction permits the carriers' use of separate rate structures for switching and transport UNEs, thus facilitating the states' efforts to compare costs and rates for each UNE. Part 32 creates uniformity among telecommunication carriers, allowing state regulators to compare and benchmark the UNE costs and rates of carriers operating in various states. Such uniformity also benefits carriers operating in more than one jurisdiction. Part 32 provides the level of cost detail that is used in forward-looking cost studies. For example, estimates of operating costs for digital switches can be derived from Class A accounts in part 32, thus enabling the states to evaluate forward-looking switching costs without the distortion that could result if all types and vintages of switches were combined into one account. Consequently, state and federal regulators may use uniform and detailed accounting data when setting rates, even when those rates are based on forward-looking costs. Commenters should discuss whether reporting at the Class B level would provide sufficient detail to identify costs for various rate elements and services such as collocation, UNEs, interconnection, and long term number portability.

In contrast to USTA's proposal, in our teleconferences and public workshops, state staff advocated adoption of new accounts to meet their data needs to implement the 1996 Act and to keep pace with changes in technology and the regulatory environment. They reason that new accounting information is needed to follow the rate of deployment and cost of new technologies, to evaluate prices for UNEs and resold services, to determine separated jurisdictional costs, to provide more details for state access revenues, and to provide insight into issues related to reciprocal compensation, state universal service support, and collocation. We seek comment on whether and, if so, specifically how we

should amend part 32 to add these new accounts. Commenters should discuss whether specific accounts are needed and provide detailed analysis as to what regulatory purpose the new information would serve. Commenters should also address and quantify, to the extent possible, the regulatory burdens associated with establishing and maintaining these new accounts. We also seek comment on whether these new accounts should be required for both Class A and Class B carriers.

2. Other Regulatory Relief

In the USTA petition and during our workshops, the carriers raised several other areas that would provide additional regulatory relief by generally loosening restrictions in our current rules. We seek comment on these areas, which are discussed in the following paragraphs. In addition, we seek comment on any other areas that may provide similar relief.

a. Inventories

Section 32.1220(h) of the Commission's rules, provides that inventories of material and supplies shall be taken during each calendar year and the adjustments to this account shall be charged or credited to Account 6512, Provisioning expense. Section 32.2311(f) of the Commission's rules requires an annual inventory of all station apparatus in stock included in this account. In its petition for rulemaking, USTA proposes that GAAP requirements should be the basis for performing these inventories instead of the detailed inventory requirements in the rules and that companies should be able to perform inventories based on risk assessment and on existing controls. We seek comment on whether we should adopt USTA's proposal to eliminate these inventory requirements.

b. Charges to Plant Accounts

In its petition for rulemaking, USTA contends that the cost of construction should be calculated using GAAP and that management judgment and materiality should form the basis of the criteria for determining the status of construction. USTA argues that arbitrary thresholds, such as the two month/ $100,000 thresholds, are not appropriate for price cap LECs. We seek comment on whether we should eliminate the threshold requirements in § 32.2003(b), modify the thresholds, or keep the thresholds. Commenters are invited to propose alternative ways of satisfying the underlying goals of these requirements.

c. Contributions

In June 1993, the Financial Accounting Standards Board (FASB) adopted Statement of Financial Accounting Standards No. 116 (SFAS–116), ''Accounting for Contributions Received and Contributions Made.'' SFAS–116 requires companies to record in the current period a liability and related expense for unconditional pledges to make contributions in future years. Prior to adoption of SFAS–116, companies would record such pledges annually as they were made. The Common Carrier Bureau (Bureau) notified carriers, after BellSouth Telecommunications, Inc., filed a notice of intent to adopt SFAS–116, that carriers should not adopt SFAS–116 for federal accounting purposes. The Bureau was concerned that adoption of SFAS–116 for federal accounting purposes would allow carriers to increase reported costs and prices based on pledges rather than actual contributions.

We conclude that we should revisit this issue. Adopting SFAS–116 may make sense for financial accounting purposes because this accounting treatment better informs investors about the impact of a company's commitments on the financial condition of the company. We are concerned, however, that adoption of SFAS–116 could necessitate an exogenous price cap adjustment permitting carriers to recover the entire amount of pledged contributions as an exogenous cost in the year the accounting change is adopted. We seek comment on whether we should allow carriers to adopt SFAS–116 for federal accounting purposes.

d. Additional USTA Proposals

USTA has presented several additional proposals to further streamline our accounting and reporting requirements. USTA proposes that we eliminate the § 32.5280(c) subsidiary record requirement. This rule section requires carriers to maintain separate subsidiary categories for nonregulated revenue recorded in Account 5280, Nonregulated operating revenue. USTA contends that this subsidiary record requirement is unnecessary.

In addition, USTA requests that we simplify deferred tax accounting by allowing carriers to book the Account 1437, Deferred tax regulatory asset, net of Account 4361, Deferred tax regulatory liability. USTA requests that carriers be permitted to eliminate the requirement to calculate the gross up for the tax on tax effect. USTA contends that this would bring the regulatory books closer to the financial books. USTA proposes that we eliminate detailed requirements for property record additions, retirements, and recordkeeping. USTA contends that detailed property records do not impact the establishment of access rates and only serve to require LECs to maintain an extraordinary array of records. USTA also proposes that we eliminate the § 32.16 requirement for notification and approval to implement new accounting standards prescribed by the Financial Accounting Standards Board (FASB). USTA claims that the FASB provides a process through which proposed changes in GAAP are exposed for debate, discussion, and evaluation. Finally, USTA proposes that the Commission clarify that section 252(e) agreements are treated the same as tariffed services in part 64 cost allocation rules. We seek comment on these proposals.

3. Affiliate Transactions

In the *Accounting Safeguards Order,* 62 FR 022918 (January 21, 1997) the Commission concluded that its revised affiliate transactions rules would promote competition by preventing LECs from using their market power in local exchange services to obtain an anti-competitive advantage in other markets. The Commission amended the affiliate transactions rules for assets and services provided by a carrier to its affiliate and services received by a carrier from its affiliate. Under these rules, such transactions are to be valued at publicly available rates, if possible. The publicly available rates, in order of precedence, are: (1) An existing tariff rate; (2) (for services only) a publicly-filed agreement or statements of generally available agreements; or (3) a qualified prevailing price valuation. To qualify for prevailing price treatment, at least 50 percent of sales of the subject asset or service must be to third parties. USTA proposes that the Commission revise § 32.27(d) to decrease the threshold from 50 percent to 25 percent for use of prevailing price in valuing affiliate transactions. USTA contends that this proposed change in threshold would be consistent with a more competitive environment. We seek comment on USTA's proposal.

Under our rules, if a transaction cannot be valued at publicly available rates, it must be valued based on a comparison of cost and fair market value. If a comparison is used, the carrier must make a good faith determination of fair market value. If the regulated company receives the asset or service from the nonregulated affiliate, the carrier must record the transaction

at the lower of cost or market value. On the other hand, if the carrier sells the asset or service to its nonregulated affiliate, it must record the transaction on its books at the higher of cost or market. There is an exception to the estimated fair market value rule for services received by a carrier from its affiliate that exists solely to provide services to members of the carrier's corporate family. These services are recorded at fully distributed cost. USTA proposes that we expand this exception to the estimated fair market value rule to include all centralized services, regardless of whether the services are from a separate affiliate. USTA argues that this rule change would permit carriers to recognize the benefit of shared administrative services. We seek comment on this proposal.

Commenters should discuss any other proposals to modify our affiliate transactions rules. We also seek comment on three modifications that would reduce the accounting burdens associated with our affiliate transactions rules. Two of these modifications would reduce the requirements related to the lower of cost or market value analysis for affiliate transactions, and the third would exempt transactions between a carrier's nonregulated activity and a nonregulated affiliate.

a. Eliminate Requirement for Fair Market Value Comparison for Asset Transfers Under $500,000

In the *Phase 1 Report and Order,* we eliminated the requirement that carriers make a good faith determination of fair market value for services where the total annual value of that service is less than $500,000. We noted that below that threshold the administrative cost and effort of making such a determination would outweigh the regulatory benefits of a good faith determination of fair market value. In such cases, the service should be recorded at fully distributed cost, and carriers should continue to report such transactions in their CAMs and ARMIS reports.

We seek comment on whether such an exemption for assets would be appropriate and whether the potentially burdensome cost analyses outweighs the benefits to ratepayers. We propose to extend the exemption to assets and no longer require carriers to perform the net book cost/fair market value comparison for asset transfers totaling less than $500,000 per year. We seek comment on our proposal. Commenters should discuss specifically the burdens, financial or otherwise, of performing the comparison for assets and the potential harm, if any, to ratepayers.

b. Establish Ceiling and Floor for Recording Transactions

As discussed, for certain transactions carriers must compare the cost of the service or asset to market value. If the carrier is the recipient of the asset or service, it must be recorded on the carrier's books at the lower of cost or market. If the carrier is the provider, it must be recorded at the higher of cost or market. We seek comment on whether ratepayers would be harmed if carriers had flexibility to use the higher or lower of cost or market valuation as either a floor or ceiling. If ratepayers would be harmed if carriers had this flexibility, we seek comment on alternative methods for addressing such harm. We propose to give carriers flexibility in valuing these transactions by allowing the higher or lower of cost or market valuation to operate as either a floor or ceiling, depending on the direction of the transaction. If, for example, the transaction were from the carrier to the nonregulated affiliate, the higher of cost or market valuation would function as the floor amount, *i.e.,* the carrier could value the asset or service at that amount or higher. If the transaction were from the nonregulated affiliate to the carrier, the lower of cost or market valuation would function as the ceiling, *i.e.,* the carrier could value the asset or service at that amount or lower. Therefore, if a carrier purchased an asset from one of its nonregulated affiliates with a net book cost of $750,000 and a fair market value of $1,000,000 (and no tariff rate or prevailing price), our current rules would require the carrier to book the asset at $750,000, which is the lower of cost or market. Our proposed rule, on the other hand, would allow the carrier to record the asset at a maximum of $750,000. We seek comment on our proposal. Commenters should address any potentially anti-competitive effects if we implement ceilings and floors for transactional valuations, as well as any benefits that would result from this approach.

c. Exempt Nonregulated to Nonregulated Transactions From Affiliate Transactions Rules

Our affiliate transactions rules apply to all transactions between carriers and their nonregulated affiliates that affect the carrier's regulated books of account. This means that many transactions involving nonregulated assets and services are subject to our affiliate transactions rules. For example, when a carrier sells an asset used exclusively in its nonregulated operations to its nonregulated affiliate, the asset must be valued according to our affiliate transactions rules. The asset is subject to two separate levels of accounting safeguards against subsidization: first, when the carrier ensures, pursuant to part 64, that the asset is recorded as a nonregulated cost, and second, when the asset is valued according to our affiliate transactions rules.

It is now the time to revisit this issue in light of the changes in the CAM audits process. In the *Phase 1 Report and Order,* we permitted the large incumbent LECs to obtain an attest examination every two years, covering the prior two-year period, in lieu of an annual financial audit. Such attests should be performed by independent auditing firms in accordance with the standards of the American Institutes of Certified Public Accountants and as further directed by the Chief, Common Carrier Bureau. As part of this attest examination, we required the independent auditor to provide the Commission with the CAM audit program at least 30 days prior to the commencement of the audit. We stated that in the event additional steps are necessary, we will communicate this to the independent auditor within 30 days and attempt to minimize the burden of any necessary changes. This review will permit the Commission's auditors to review the audit program and, if necessary, work with the independent auditors to eliminate potential problems in advance.

We propose that our affiliate transactions rules should not apply to nonregulated activities transferred from the carrier's nonregulated operations to its nonregulated affiliate. We seek comment on whether the independent CAM attestation process or alternative measures can be relied upon to ensure that there is no ratepayer harm. We also seek comment on whether it matters how the carrier values its transaction to its nonregulated affiliate because our part 64 rules ensure that the asset is recorded as nonregulated. We seek comment on our proposal. Commenters should discuss whether removing these transactions from our affiliate transactions rules could result in potential ratepayer harm.

4. Incidental Activities

Section 32.4999(l) provides that revenues from minor nontariffed activities that are an outgrowth of the carrier's regulated activities may be recorded as regulated revenues under certain conditions. This provision obviates the need to make the detailed cost allocations that would otherwise be

required to remove the costs of the nonregulated activity from regulated costs. Essentially, the revenues from the activity are used to reduce the carrier's revenue requirement rather than removing the costs to reduce the carrier's revenue requirement.

These activities, referred to as ''incidental activities,'' must satisfy four criteria:

(1) Be an outgrowth of regulated operations;

(2) have been treated traditionally as regulated;

(3) be a non-line-of business activity; and

(4) result in revenues that, in the aggregate, represent less than one percent of total revenues for three consecutive years. Carriers must list their incidental activities in their CAM, but may not add new incidental activities because of the second criterion. Carriers filed their first CAMs over ten years ago. During this decade, the list of incidental activities has been static. We seek comment on whether eliminating the ''treated traditionally'' requirement would harm ratepayers.

We note that the three remaining criteria provide safeguards that the incidental-activities exception will not be abused. We seek comment on whether we should modify the three remaining criteria. Commenters advocating modifications to these three criteria should address how such changes would provide adequate safeguards against abuse. We propose to relax the ''treated traditionally'' requirement to allow carriers the flexibility to add new incidental activities. Under this proposal, the three other criteria would remain unaffected. We seek comment on whether relaxing this criterion is appropriate. Commenters should describe any additional activities that would qualify as incidental under our proposed rule. In addition, commenters should address whether, under our proposal, carriers could classify a new nonregulated activity as incidental and subsequently reclassify it as nonregulated thereby forcing ratepayers to bear the risk of nascent nonregulated ventures.

5. Expense Limits

The purpose of the expense limit is to reduce the cost of maintaining property records for the acquisition, depreciation, and retirement of a multitude of low-cost, high-volume assets. Increases in the expense limit are made periodically to recognize the effects of inflation, technological changes, and changes in the telecommunications regulatory environment. The expense limit in part 32 has been increased several times. In addition, Responsible Accounting Officer Letter No. 6, increased from $200 to $500 the limit for expensing the tools and test equipment included in the central office plant accounts.

We seek comment on whether the expense limit rules should be modified again. Specifically, we seek comment on whether we should raise the expense limit from $500 to $2,000 for both Account 2124, General support computers, and the tools and test equipment included in the central office plant accounts. Alternatively, we could extend the expense limit to include all the plant asset accounts, not just selected general support assets. We note that the expense limit would have to be the same for all carriers to allow the Commission to compare costs across companies when determining appropriate levels of Universal Service support. Commenters should discuss positive or negative impacts on maintaining continuing property records related to central office plant accounts if the expense limit were raised. Commenters should also address how we should treat the embedded investment in these accounts if the expense limit were raised.

6. Additional Modifications to Cost Allocation Manual Requirements

Section 64.903 of the Commission's rules requires incumbent LECs with annual operating revenues from regulated telecommunications operations equal to or above a designated indexed revenue threshold, currently $114 million, to file CAMs annually setting forth the cost allocation procedures that they use to allocate costs between regulated and nonregulated services. The companies with operating companies that exceed the indexed threshold are SBC Communications, Qwest, Verizon, and BellSouth Corporation (all filing based on Class A accounts) and Alltel, Cincinnati Bell, Citizens Telecom, Frontier, Sprint, and C–TEC (mid-size carriers, filing based on Class B accounts). USTA proposes that the Commission allow all carriers the option to allocate part 64 costs at a Class B level. USTA contends that direct assignment of costs would not change if carriers moved from Class A to Class B accounting. We seek comment on this proposal and any alternative modifications to these requirements. Commenters should discuss any concerns that may affect the states due to cost allocations at the Class B level and address the potential for cost allocation distortions. Commenters should also discuss the benefits of such an approach.

7. Classification of Companies

Section 32.11 of the Commission's rules divides companies into two categories for accounting purposes: Class A and Class B. Carriers with annual revenues from regulated telecommunications operations that are equal to or above the indexed revenue threshold, currently $114 million, are classified as Class A; those with annual revenues from regulated telecommunications operations that are below the threshold are classified as Class B. Currently, we apply these requirements to incumbent LECs only. We seek comment on whether § 32.11 should be amended so that its requirements explicitly pertain only to incumbent LECs, as defined in section 251(h) of the Communications Act, and any other companies that the Commission designates by order.

8. Cost Allocation Forecasts

Section 64.901(b)(4) of the Commission's rules requires that carriers allocate the costs of central office equipment and outside plant investment between regulated and nonregulated activities based on a forecast of the relative regulated and nonregulated usage during a three calendar year period beginning with the current calendar year. The purpose of this rule is to avoid cost allocation distortions that could adversely affect regulated ratepayers. USTA has asserted that this rule is burdensome and unnecessary. We seek comment on USTA's proposal, whether elimination of the rule would adversely affect ratepayers, and whether there are other alternative forecasting methodologies.

B. ARMIS Reporting Requirements

In this NPRM we are proposing revisions to the following ARMIS Reports: 43–01 (Annual Summary Report); 43–02 (USOA Report); 43–03 (Joint Cost Report); 43–04 (Separations and Access Report); 43–07 (Infrastructure Report); and 43–08 (Operating Data Report). As set forth, our proposed recommendations seek to eliminate or substantially simplify the reporting requirements for both large incumbent LECs and mid-sized incumbent LECs. We seek comment on our proposed recommendations. We are also looking for ways to provide easier input and access to the ARMIS reports and invite comment on how we can best achieve a more user-friendly ARMIS system. In addition, we set forth a separate proposal addressing reporting requirements for mid-sized carriers. We seek comment on the separate proposal

for mid-sized carriers and ask commenters to address whether the proposed abbreviated filing requirement is sufficient and whether different reporting requirements for large incumbent LECs and mid-sized incumbent LECs, as proposed, is justified. To the extent ARMIS reports are used by states and other parties, we seek comment on whether those parties can obtain enough information for their purposes from alternative sources. In particular, commenters should address whether state-imposed or other non-federal reporting can be used to generate sufficient data for these parties' purposes.

We have attached the proposal presented by the large incumbent LECs as Appendix 1 to this document and seek comment on the industry's proposal as it relates to the ARMIS 43–01, 43–02, 43–03, 43–04, 43–07, and 43–08 Reports. USTA contends that this proposal would be less burdensome and addresses some of the concerns expressed by the Commission and the state staffs in the public meetings. We specifically seek comment from the states on how that industry's proposal, if implemented, would affect their ongoing activities.

1. ARMIS Reports 43–01, 43–02, 43–03, and 43–04

We propose to eliminate the requirement to file ARMIS 43–01, Table I for all carriers filing at the Class A level. We propose to generate this table from information provided in other financial ARMIS reports and to post the report electronically with the carrier's annual ARMIS filing. Under this proposal, carriers would be relieved from reporting information that can otherwise be derived from other financial ARMIS reports. At the same time, useful summary information would be made available to policy makers and interested parties. We seek comment on this proposal. We are also considering eliminating Table II, from the ARMIS 43–01 requirements. We propose to eliminate the reporting of all Common Line Demand Minutes of Use (*i.e.,* premium and non-premium). We seek comment on retaining the sections for Switched Traffic Sensitive Demand Minutes of Use and Common Line Demand Billable Access Lines. This information about traffic on the carrier's network may be needed for decisions concerning jurisdictional separations, subscriber line charges, the deployment and cost of Lifeline service, and other universal service issues. The information we propose to retain would be added to the ARMIS 43–04 in conjunction with row 9010 (Total Billable Access Lines). We seek comment on this proposal and on any alternative proposals for achieving these purposes.

In this NPRM, we seek comment on eliminating the filing of ARMIS 43–02, Table I–1 (Income Statement Accounts) for all carriers filing at the Class A level. Table I–1 collects data on the carrier's revenues, expenses, and net income for the reporting period. We propose to eliminate the requirement for carriers to file Table I–1 and to generate this table from information provided in the other financial ARMIS reports. As with our proposal for eliminating Table-I from the 43–01 Report, this proposal would provide relief to carriers from reporting information that can otherwise be derived from other ARMIS reports.

We propose to reduce the number of columns currently reported on the 43–03 Report by eliminating the distinction between ''SNFA and Intra-co. Adjustments'' and ''Other Adjustments.'' We propose to combine these columns into one column entitled ''Adjustments.'' We seek comment on this proposal.

In order to implement our proposal to eliminate the requirement to file ARMIS 43–01, Table I and ARMIS 43–02, Table I–1, for the largest incumbent LECs, we note that collection of some additional data will be needed in the ARMIS 43–03 Reports. Therefore, we are proposing to include in ARMIS 43–03, the collection of data for Account 1402 (Investment in Non-Affiliate Companies); Account 1437 (Deferred Tax Regulatory Asset); Account 4341 (Net deferred tax liability adjustment); Account 4361 (Deferred tax regulatory liability); and the account series (7410 through 7450) for Account 7400 (Non-operating Taxes). In addition, we propose the addition of 4 rows for collecting information on the number of employees (rows 830, 840, 850, and 860). We note that these data are currently required in ARMIS 43–02, Table I–1, but not in any other ARMIS report. We seek comment on this proposal and whether any additional data would be needed to meet our ongoing needs.

The ARMIS 43–04 Separations and Access Report contains data regarding the separation of carriers' regulated revenues and costs between the state and interstate jurisdictions and allocation of interstate amounts among the access charge categories. We note that the Federal-State Joint Board has currently recommended an interim five-year freeze on separations activities as it continues to further consider more comprehensive separations reform. Until such time as the Commission takes action on the Joint Board's recommendation, we will not propose changes that would affect separations data.

We propose some revisions to the 43–04 Report, however, that we do not believe will affect the separations data. We propose to reduce the number of columns by eliminating the column for ''BFP'' (*i.e.,* the base factor portion) and collecting this data in the existing column entitled ''Total Common Line.'' We seek comment on this proposal. As noted, our proposal to eliminate Table–II, from the ARMIS 43–01 requirements entails that we retain data collection of Switched Traffic Sensitive Demand Minutes of Use and Common Line Demand Billable Access Lines. In the event we decide, after reviewing the comments, to retain this data, we propose to add this information to the ARMIS 43–04 Report in conjunction with row 9010 (Total Billable Access Lines). We seek comment on this proposal. We also propose that the carriers be required to identify the cost and revenue associated with their excluded services separately from the remainder of their access element data. We seek comment on these proposals. Commenters also may propose alternative approaches that do not require carriers to identify the cost and revenue associated with their excluded services separately from the remainder of the access element data.

Finally, we note that part 32 requires metallic and non-metallic subsidiary record categories for each of the cable investment and expense accounts. These subsidiary record categories are not reported to the Commission, but the data contained therein are used to calculate universal service support for non-rural carriers, and also are useful in other forward-looking cost studies. We propose to add rows to ARMIS 43–02 and 43–04 Reports to allow for the reporting of metallic and non-metallic cable investment and expense information. We seek comment on this proposal.

2. ARMIS 43–07 and 43–08 Reports

The ARMIS 43–07 Infrastructure Report and 43–08 Operating Data Report collects data about the physical and operating characteristics of the local exchange carriers' telephone network. Together, these reports provide information about the make-up and operating capability of nearly 95 percent of the country's public local exchange telephone network. This information has been useful to policymakers at federal, state, and local levels, and provides critical data not available through other public sources. We seek

comment on the continued need to collect this data at the federal level, or whether state-level collection or other sources would be sufficient. As reported in ARMIS, approximately 480 million telephone calls were carried over the public network in 1991. By 1999, calls over the public telephone network reached almost 660 million, an increase of almost 40 percent in traffic. This growth shows the increasing use of, and reliance on, the public network for communications throughout the country. We seek comment on whether such reliance should be considered when deciding whether to retain these reporting requirements.

Our monitoring through ARMIS has provided us with information to assess the condition of the country's network infrastructure and has permitted us to make informed decisions to protect against degradations and outmoded network capabilities. While the ARMIS 43–07 and 43–08 Reports were designed to achieve this purpose, our review reveals that many of the reporting requirements may have outlived their usefulness. We believe that significant revisions to these reports are in order. We seek comment on the elimination of obsolete data and also the collection of data related to new technologies.

We note that the Commission currently has underway an effort to collect data concerning broadband deployment. The information collected through the *Local Competition and Broadband Data Gathering Program,* however, is not a substitute for the information collected in the ARMIS 43–07 and 43–08 Reports and was designed to be complementary to other Commission data gathering efforts, including ARMIS. The *Local Competition and Broadband Data Gathering Program* will provide the Commission with information on local competition and the deployment of advanced services in the United States; in contrast, the information collected in ARMIS provides the Commission with basic information about the infrastructure, capacity, and operating characteristics of the nation's network. We seek comment on whether this distinction is meaningful and on the extent to which ARMIS data is needed in light of our newer broadband data gathering efforts.

We seek comment on whether gathering information about the deployment of newer technologies would assist us in carrying out our mission of ensuring a competitive environment, while ensuring universal service. We seek comment on whether we should collect data on newer technologies to assist us in achieving our stated objectives of ensuring that incumbent LECs maintain and upgrade their network infrastructure for all consumers. We recognize that additional collections must be carefully designed to balance our need for information with the need to reduce burdens imposed on carriers. We seek comment on how burdensome the requirements we consider would be if imposed. Commenters should discuss whether the additional information concerning these newer technologies are appropriate indicators of the carriers' efforts to upgrade and invest in technologies that provide improved service to their customers and promote efficiencies and cost savings.

Finally, we seek comment on ways to improve reporting requirements for infrastructure and operating data in ARMIS. We seek comment on whether the ARMIS 43–07 and 43–08 Reports could be made more efficient in terms of use and reporting by combining some or all requirements. We note, however, that although there is a close relationship between these reports, there are some notable differences. Generally, the 43–07 Report collects information on measure of capacity while the 43–08 Report collects information on what is in-service. Further, the 43–07 Report is only filed by mandatory price cap incumbent LECs and is reported at the study area (jurisdiction) and holding company levels. The 43–08 Report is filed by all carriers at or above the revenue reporting threshold and is reported at the operating company level. We ask commenters to make specific recommendations as to the nature of any proposed changes in format and collection of data. We seek comment on whether and how ARMIS should be modified to enable us to perform trend analysis, provide rate and tariff analysis, make relevant comparisons among companies, and monitor the effects of company mergers and acquisitions, and whether the purposes of such analyses could be achieved through alternative means.

a. ARMIS 43–07—Infrastructure Report

In ARMIS 43–07 Infrastructure Report we propose to eliminate the collection of outdated information and propose to collect information on newer technologies. Our intent is to collect basic relevant facts about the deployment of new technologies, not to expand significantly our monitoring program. In Table I (Switching Equipment), we propose to eliminate all reporting requirements for electromechanical switches (rows 130–141). We further propose to eliminate reporting requirements for analog stored-program-control and digital stored-program-control switches except for the total number of switches and lines served (retain rows 150, 160, 170 and 180; eliminate rows 151–155, 161, 171–175, and 181). We also propose to eliminate all reporting requirements related to equal access and touch tone capabilities (rows 190–221). We seek comment on these proposals. We also propose to eliminate reporting of information related to SS7 and ISDN capabilities except to retain information concerning total switches, lines, local switches, and tandems equipped with SS7 and ISDN capabilities (eliminate rows 231, 233, 235, 237, 241, 247, 251, 257, 271, 281, 291, and 301). We seek comment on this proposal.

To the extent commenters conclude that our broadband data gathering program is inadequate for this purpose, we seek comment on whether our monitoring program should include information on new technologies that indicate the degree that carriers are upgrading the network. We seek comment on including information for switches capable of transmitting the ATM protocol in Table I, and on the characteristics of ATM that carriers should provide in this report. Switched multi-megabit data service (''SMDS''), internet routers, and frame relay service are high-speed data telecommunications services built upon packet-switching technology. These services are widely offered to business customers for high-volume usage. We seek comment on whether carriers should report data on SMDS, internet routers, and frame relay services in Table I and on which characteristics of switches used to provide SMDS, internet routers, and frame relay services carriers should report.

Table II (Transmission Facilities) collects information about components of the network that are used to carry voice, video, and data traffic. Data reported in Table II provide information about transmission facilities for the total operating area of the carrier, and does not distinguish between urban and rural areas. The deployment of new technologies and new services in rural areas has been a matter of particular concern for the Commission. Transmission facilities, are perhaps, the most critical component in the provisioning of new services to rural areas. However, because the reporting carriers do not distinguish between rural and urban transmission facilities, the Commission cannot compare rural and urban infrastructure development based on the current reported information. Therefore, we seek

comment on modifying Table II to require carriers to report data by Metropolitan Statistical Areas (MSA) and non-MSA. We seek comment on whether this distinction will assist the Commission and other interested parties in measuring the deployment of advanced telecommunications infrastructure in rural areas. We also seek comment on whether this or alternative proposals would be best considered in the context of the broadband data gathering proceeding.

In the first section of Table II, ''Sheath Kilometers,'' carriers report data on transmission facilities within their operating areas. Carriers use either analog or digital technology on copper wire, coaxial cable, fiber, radio, and other media. We seek comment on changing the title ''Sheath Kilometers'' to ''Loop Sheath Kilometers'' and to narrow the collection of data to only local loop facilities connecting customers to their serving offices.

In the second section of Table II, ''Interoffice Working Facilities,'' total circuit links are reported for baseband, analog carrier, and digital carrier. We seek comment on whether we should eliminate the reporting requirements that further distinguish baseband, analog, and digital (rows 331, 332, 333, 350, 351, 352, 360, 361, 362, 363). We believe we can simplify the reporting requirements and obtain relevant information by requiring only the total circuit links for copper, radio, and fiber. We also note that optical carrier facilities, such as synchronous optical networks (SONET) are currently being deployed by the incumbent LECs. This technology will increasingly play a role in improving the transmission capacity of the network. We seek comment on whether we should include categories for optical carrier facilities and non-optical carrier facilities. Commenters should address definitional and other characteristics that would be useful if collection of data on this technology is implemented. We also seek comment on whether this or alternative proposals would be best considered in the context of the broadband data gathering proceeding.

In the third section of Table II, ''Loop Plant-Central Office Terminations,'' carriers report total working channels and total equipped channels. Under each category, there is a requirement for reporting six subcategories (copper, baseband, analog carrier, digital carrier, fiber digital carrier, and other). We seek comment on whether we should eliminate the reporting of six subcategories of equipped channels, and retain only the total of equipped channels. We seek comment on whether data about new technologies used in the local loop that provide high-capacity transmission facilities closer to subscribers would assist the Commission and the states in monitoring the deployment of new services and how that technology affects the development of competition. Commenters should discuss which categories of data would provide an accurate picture of deployment without placing an undue administrative burden on the reporting incumbent LECs. We also seek comment on whether this or alternative proposals would be best considered in the context of the broadband data gathering proceeding.

In the fourth section of Table II, ''Other Transmission Facility Data,'' we propose to eliminate reporting of information that is no longer useful (fiber strands terminated at the customer premises at the DS–0 rate; and fiber strands terminated at the customer premises at the DS–2 rate). We seek comment on including information on hybrid fiber-copper loop interface locations, number of customers served from these interface locations, xDSL customer terminations associated with hybrid fiber-copper loops, and xDSL customer terminations associated with non-hybrid loops. Such data could provide a meaningful indication of carrier's efforts to upgrade the network. Commenters should discuss any other specifics that may provide a better indicator of this aspect of the network. We also seek comment on whether this or alternative proposals would be best considered in the context of the broadband data gathering proceeding.

In Table III (LEC Set-up Time Reporting), information is provided about incumbent LEC call set-up time for calls delivered by the incumbent LEC to interexchange carriers. Incumbent LEC call set-up time measures the time from when the customer completes dialing until the call reaches an interexchange carrier. We note that the need for this data was largely driven by problems arising from the change from a multi-frequency to the SS7 protocol. Our review of the data shows that most of these problems have been solved. Thus, we propose to eliminate this table. We seek comment on this proposal.

In Table IV (Additions and Book Costs), carriers report data concerning total access lines in service, access line gain, and total gross capital expenditures. This information provides data as it relates to carriers' actions to maintain and upgrade the network. We seek comment on whether there is continued need to collect this information by the federal government, as opposed to states or other entities. We seek comment on whether the information collected in this table is available from other data reported in ARMIS, and if so, whether there is a need for duplication. Specifically, we ask commenters to comment on whether the information on number of access lines is the same information reported in the 43–08 Report and whether the data on gross capital expenditures is the same information reported in the 43–02 Report, Table B–1.

b. ARMIS 43–08—Operating Data Report

The ARMIS 43–08 tables, which collect data on an operating company level by state, provide us with the ability to assess trends in investment in physical plant and to benchmark among carriers. We seek comment on the continued importance of such assessments and on whether there are alternative methods for achieving the goals underlying these assessments. We believe there are a number of areas in the ARMIS 43–08 Report where unnecessary data can be eliminated and where necessary data can be collected more efficiently. We seek comment on whether we can eliminate the reporting requirements in Table 1.A (Outside Plant Statistics—Cable and Wire Facilities), that distinguish among aerial, underground, buried, submarine, deep sea, and intrabuilding cable plant (columns d–o). We note that some carriers have suggested that we use information on relative sheath miles in aerial, underground, and buried cable as a basis for determining the relative amount of these types of facilities used in the forward looking model for calculating universal service support for non-rural carriers. In Table 1.B (Outside Plant Statistics—Other), we propose to eliminate the reporting of information on satellite channels and video circuits for carriers' radio relay and microwave systems (columns be, bj, bm). We believe that data collected in these areas may no longer provide important information relevant to our policy analysis. We seek comment on these proposals. We ask commenters proposing to retain this information to discuss at what point would collection of data no longer be necessary. For instance, radio relay systems, except in 11 states, are 100 percent digital. We seek comment on whether some threshold level of deployment would provide a basis for eliminating the need for information, and if so, what an appropriate threshold level would be.

In Table II (Switched Access Lines in Service by Technology), we propose to eliminate the distinction between

analog and digital lines, and require carriers to report the total of main access lines, PBX and Centrex units, and Centrex extensions (retain columns cc, cd, and ce on a total basis; and eliminate columns cf, cg, and ch). Our experience reveals that, while the data derived from these columns provide us with important information, the information may be more useful and collected more efficiently if provided on a total basis. We seek comment on these proposals and on the continued importance of collecting switched access line data generally.

In Table III (Access Lines in Service by Customer), we propose to narrow the information collection to total number of Business Access Lines (Single-Line and Multi-Line) and Residential Access Lines (Lifeline/Non-Lifeline and Primary/Non-Primary). We believe that the level of detail required in this table may not be necessary and that collection on a total basis may be sufficient for us to meet our responsibilities. We propose to collect data on private lines providing intrastate service. We note that this information is used to calculate forward-looking costs for universal service purposes. We seek comment on whether this information is available from any other public source. We also seek comment on whether Special Access Lines (Analog and Digital) (columns dk and dl) provide accurate information about the carriers' provision of special access lines. Specifically, we seek comment on whether there is a need for clarification of this reporting requirement. For instance, would redefining this collection as Customer Private Line Terminations (Broadband and Narrowband) or some other designation result in more accurate reporting by carriers? We note that there has been much controversy over the use of the term ''Special Access Lines,'' resulting in inconsistent reporting by carriers. We seek comment on the use of this term and whether a more meaningful definition or term would be appropriate. We also ask commenters to discuss whether the use of terms in other ARMIS reports should be revised or clarified in order to be consistent with any change made in this report.

C. Relief for Mid-Sized Carriers

In this NPRM, we propose more significant reductions for mid-sized carriers than we have proposed for large incumbent LECs. In our public meeting with the mid-sized carriers, they suggested that we treat mid-sized Class A carriers as Class B carriers. This would eliminate all CAM requirements and ARMIS filings for such carriers. We seek comment on this proposal. As an alternative, we propose to eliminate mandatory annual CAM filings and biennial CAM audits for these carriers. Instead, the mid-sized carriers would file only an annual certification with the Commission. We also propose raising the indexed revenue threshold from $114 million to $200 million. The net effect for mid-sized carriers would be that several carriers will be classified as Class B carriers, and therefore not subject to any reporting requirements, and the balance of the mid-sized carriers will be subject only to very minimal reporting requirements. We also propose eliminating all financial reporting for mid-sized carriers except the 43–01 (Summary Report). We seek comment on adoption of these proposals for mid-sized carriers.

1. Reduced Cost Allocation Manual Procedures

We seek comment on ways to further reduce regulatory burdens on mid-sized incumbent LECs. We propose to eliminate the requirement that mid-sized incumbent LECs file their CAMs on an annual basis. We seek comment on whether these carriers should be required to maintain cost allocation manuals in the format set forth in § 64.903 of our rules, even if they do not file those CAMs with the Commission. Commenters should quantify the costs of maintaining a CAM in accordance with the requirements of § 64.903, and suggest any modifications to that rule they deem appropriate. As an alternative, the mid-sized carriers could file a certification with the Commission stating that they are complying with § 64.901 of the Commission's rules. Under this proposal, the certification would be signed, under oath, by an officer of the incumbent LEC, and filed with the Commission on an annual basis. In addition, we propose to eliminate the requirement for an attestation engagement every two years. The Common Carrier Bureau would have the authority to request further information or order an audit of the carrier's books to ensure they are in compliance with our cost allocation requirements. We seek comment on these proposals.

We further seek comment on whether our definition of mid-sized incumbent LECs should be re-examined. We note that a few carriers have recently crossed the indexed revenue threshold, although they are significantly smaller than the majority of mid-sized LECs. We propose to increase the indexed revenue threshold from $114 million to $200 million. Under this proposal, carriers with operating revenues below $200 million would not be required to maintain a CAM or file a certification. We seek comment on our proposal. Carriers should discuss whether, alternatively, the threshold should be based on holding company revenues instead of operating company revenues, with a corresponding change in threshold.

2. Streamlined ARMIS Requirements

We propose to eliminate the ARMIS 43–02, 43–03, and 43–04 reporting requirements for mid-sized carriers. We recognize that mid-sized carriers often have limited resources and have financial transactions that are generally smaller and fewer in number than the larger incumbent LECs. The cost of regulatory compliance may disproportionately impact the mid-sized carriers filing the more detailed ARMIS 43–02, 43–03, and 43–03 reports.

We seek comment on retaining the reporting requirement that mid-sized carriers report ARMIS 43–01 (Summary Report), which presents information in a highly aggregated form. We ask commenters to specifically address the costs and benefits of requiring certain mid-size carriers to file the ARMIS 43–01 Summary Report, particularly in light of the previous proposal to eliminate ARMIS 43–02, 43–03, and 43–04. To the extent we find obvious errors or inconsistencies, we have the ability to request further information from the carrier that will clarify and address such issues. We also seek comment on the costs and benefits of retaining the requirement that carriers at or above the threshold continue to file operating data in the ARMIS 43–08 Report.

We further propose to reduce the requirements in ARMIS 43–01 by eliminating the distinction between ''SNFA and Intra-co. Adjustments'' and ''Other Adjustments.'' We propose to combine these columns into one column entitled ''Adjustments.'' We propose to reduce the number of columns by eliminating the column for ''BFP'' and collecting this data in the existing column entitled ''Total Common Line.'' Finally, we propose to either add a new column for ''excluded services'' or add excluded services cost and revenue data to the billing and collection data in a renamed column. This would enable us to reconcile their rate of return filings with their accounting data. We seek comment on these proposals, and on whether it would be appropriate to extend all or part of this relief to larger carriers.

I. Phase 3—Long Term Transition to Deregulation

The 1996 Act directed the Commission to ''provide for a pro-

competitive, de-regulatory, national policy framework.'' As regulatory, technological, and market conditions continue to change, the Commission must consider more drastic changes to existing accounting and reporting requirements. We thus seek to undertake a broader examination of part 32 and ARMIS requirements with the goal of determining what additional changes can be made as competition develops, and assessing ultimately what, if any, specific accounting and reporting requirements are necessary when local exchange markets become sufficiently competitive.

Our accounting and reporting safeguards were largely implemented to support Commission policies intended to prevent dominant carriers from taking unfair advantage of their monopolistic control over loop facilities and access to the local exchange network. As the local exchange industry becomes more competitive, we expect that our needs for accounting and reporting information will diminish. At the same time, we must be careful not to eliminate requirements that are necessary to promote universal service, foster efficient competition, and protect consumers before significant market changes occur.

In this section, we seek comment on what roadmap we should follow for accounting and reporting deregulation. Specifically, we seek comment on whether there are certain triggers that will allow the Commission to significantly modify or relieve certain accounting and reporting requirements that currently apply to incumbent LECs. Is there a point at which the Commission should completely eliminate its accounting and reporting requirements? Is that point when all local exchange carriers become non-dominant? Alternatively, should individual carriers be relieved of accounting and reporting requirements as they individually become non-dominant? How would this Commission make such a finding of non-dominance? How should the Commission proceed if an incumbent remains dominant for certain services, but not others? How should deregulation occur if some carriers are deemed non-dominant, but other carriers, such as rural carriers, remain dominant? Is there a basis for eliminating or modifying our accounting and reporting requirements on an industry wide basis, even if some carriers retain market power?

We also ask commenters to address the effect of BOCs receiving section 271 authorizations to provide in-region interLATA services. We seek comment on whether certain accounting requirements should sunset when the section 272 separate affiliate requirements sunset for a given carrier in a particular state, and if so, which specific requirements should be eliminated. Would it be administratively practical for accounting and reporting requirements to be reduced or eliminated on a state-by-state basis?

We seek comment on whether achieving pricing flexibility should be a trigger for relaxing accounting and reporting requirements and if it would be administratively practical because pricing flexibility is granted on a market by market basis. If so, which specific requirements should be modified or eliminated?

We note that other carriers, such as competitive LECs (CLECs), interexchange carriers, cable companies providing telephony, and wireless carriers, are not subject to our accounting and reporting requirements. We seek comment on whether this asymmetric regulation makes sense as we move to a more competitive environment. What is the policy rationale for subjecting one type of carrier to accounting and reporting requirements when other carriers are not subject to such requirements? Do the current accounting and reporting requirements imposed on incumbent LECs impede their ability to compete with other market participants? Commenters should quantify any monetary or other impact of our current requirements.

We note that a number of incumbents, both large and small, have begun to compete as CLECs outside of their traditional service areas. Moreover, a number of incumbents are offering bundled packages of offerings—such as voice, Internet access, wireless, and long distance—in competition with other carriers. How should our accounting and reporting requirements evolve as carriers no longer remain in their historical line of business?

The requirements under consideration in this proceeding fall into two general areas. First, our accounting rules largely prescribe how incumbent LECs record and allocate costs. Second, our ARMIS reporting rules require that certain carriers report to the Commission on an annual basis various information, both financial and nonfinancial. We seek comment on whether it makes sense to relieve carriers from reporting requirements, while maintaining our existing accounting requirements. Compliance with certain requirements may be critical to protecting ratepayers from subsidizing nonregulated services, but the Commission may not need information on an annual basis on how specific carriers are complying with such requirements. How would the Commission's mission be affected if it were to gather information on a less frequent, or more ad hoc, basis?

Our accounting and reporting requirements already recognize that the burdens of compliance may outweigh the benefits for small and mid-size incumbent LECs. The vast majority of incumbents with fewer than two percent of the nation's access lines are not required to file in ARMIS today, even though they have historically been dominant in their relevant markets. In the 1996 Act, Congress explicitly recognized that smaller and rural carriers might face unique circumstances warranting lesser regulatory requirements. Regardless of what actions we take with respect to the larger carriers, should deregulation proceed in a different fashion, for companies with fewer than two percent of access lines? Commenters should address with specificity what deregulatory measures are appropriate for smaller carriers and what safeguards are necessary to ensure that consumers' interests are protected.

We note that our accounting and reporting rules were designed to provide uniform accounting data to be used to support tariffed prices, to provide information concerning the financial condition of incumbent local exchange carriers, and to serve as an efficient system for both management and federal and state regulators. As carriers were allowed to provide nonregulated services without the need for structural separations, the accounting and reporting rules served the additional public policy goal of ensuring that the ratepayers of regulated services did not bear the costs and risks of nonregulated activities. As our universal service system developed, the accounting and reporting rules also served the policy of ensuring proper cost data on which to base a system of sufficient universal service support. Comments addressing triggers for accounting and reporting deregulation should also discuss these policy underpinnings, how these policies have changed over time, and how these policies can be maintained when more drastic deregulation of accounting and reporting occur.

Section 220 of the Communications Act states that the Commission shall prescribe a uniform system of accounts for use by telephone companies. Sections 260 and 271 through 276 of the Communications Act require a certain amount of accounting safeguards in place to either ensure that transactions between Bell operating companies

(BOCs) and their affiliates or nonregulated activities are accomplished without cost misallocations and that these transactions are performed on an arm's length basis. Section 254(k) specifically states that the Commission, with respect to interstate services, and the states, with respect to intrastate services, shall establish any necessary cost allocation rules, accounting safeguards, and guidelines to ensure that services included in the definition of universal service bear no more than a reasonable allocation of joint and common costs of facilities used to provide these services. These legislative accounting safeguards were mandated to ensure that the pro-competitive goals of the Communications Act could be realized. Moreover, section 1 of the Communications Act established as one purpose to ensure ''a rapid, efficient, Nation-wide, and world-wide wire and radio communication service with adequate facilities and reasonable charges.'' We seek comment on how we can best achieve these mandates keeping in mind the ultimate goal of a deregulatory national telecommunications policy framework.

We ask commenters to discuss whether and how the Commission and the states can carry out their respective statutory mandates without uniform and accurate accounting and reporting information. Specifically, commenters should address how jurisdictional separations could be implemented without part 32 accounting data. Commenters should also discuss how any system of universal service support could be implemented without the Commission receiving uniform accounting data. Commenters should address how this Commission could assess the state of the network without ARMIS information. Finally, we ask commenters to discuss how the Commission and states could address cost issues in various proceedings such as long-term number portability, interconnection, pole attachments, and collocation without uniform and accurate accounting data.

II. Procedural Issues

A. Ex Parte Presentations

This is a permit but disclose rulemaking proceeding. *Ex parte* presentations are permitted, except during the Sunshine Agenda period, provided that they are disclosed as provided in the Commission's rules. *See generally* 47 CFR 1.1202, 1.1203, and 1.1206.

B. Initial Regulatory Flexibility Analysis

As required by the Regulatory Flexibility Act (RFA), the Commission has prepared this Initial Regulatory Flexibility Analysis (IRFA) of the possible significant economic impact on small entities by the policies and rules proposed in this Notice of Proposed Rulemaking. Written public comments are requested on this IRFA. Comments must be identified as responses to the IRFA and must be filed by the deadlines for comments on the Notice of Proposed Rulemaking provided in section V.D. The Consumer Information Bureau, Reference Information Center, will send a copy of the Notice of Proposed Rulemaking, including this IRFA, to the Chief Counsel for Advocacy of the Small Business Administration (SBA). In addition, the Notice of Proposed Rulemaking and IRFA (or summaries thereof) will be published in the **Federal Register**.

Need for, and Objectives of, the Proposed Rules

The Commission has initiated this proceeding to determine whether it should streamline or modify the current accounting and reporting requirements. This Notice of Proposed Rulemaking consists of Phase 2 and Phase 3 of the Commission's comprehensive review of the accounting and reporting requirements. This Notice of Proposed Rulemaking seeks to reduce accounting and reporting requirements, while furthering the Commission's goals of promoting universal service, fostering efficient competition, and protecting consumers.

Legal Basis

The legal basis for the action as proposed for this rulemaking is contained in sections 4(i), 4(j), 11, 201(b), 303(r), and 403 of the Communications Act of 1934, as amended, 47 U.S.C. 154(i), 154(j), 161, 201(b), 303(r), and 403.

Description and Estimate of the Number of Small Entities to Which the Proposed Rules May Apply

The RFA directs agencies to provide a description of, and, where feasible, an estimate of the number of small entities that may be affected by the proposed rules, if adopted. The RFA generally defines ''small entity'' as having the same meaning as the term ''small business,'' ''small organization,'' and ''small governmental jurisdiction.'' In addition, the term ''small business'' has the same meaning as the term ''small business concern'' under the Small Business Act, unless the Commission has developed one or more definitions that are appropriate to its activities. Under the Small Business Act, a ''small business concern'' is one that: (1) Is independently owned and operated; (2) is not dominant in its field of operation; and (3) meets any additional criteria established by the SBA.

We have included small incumbent local exchange carriers (LECs) in this present RFA analysis. As noted, a ''small business'' under the RFA is one that, *inter alia*, meets the pertinent small business size standard (*e.g.*, a telephone communications business having 1,500 or fewer employees), and ''is not dominant in its field of operation.'' The SBA's Office of Advocacy contends that, for RFA purposes, small incumbent LECs are not dominant in their field of operation because any such dominance is not ''national'' in scope. We have therefore included small incumbent LECs in this RFA analysis, although we emphasize that this RFA action has no effect on the Commission's analyses and determinations in other, non-RFA contexts.

The SBA has developed a definition of small entities for telephone communications companies other than radiotelephone companies. The SBA has defined a small business for Standard Industrial Classification (SIC) categories 4812 (Radiotelephone Communications) and 4813 (Telephone Communications, Except Radiotelephone) to be small entities when they have no more than 1,500 employees. The Census Bureau reports that, there were 2,321 such telephone companies in operation for at least one year at the end of 1992. All but 26 of the 2,321 non-radiotelephone companies listed by the Census Bureau were reported to have fewer than 1,000 employees. Thus, even if all 26 of those companies had more than 1,500 employees, there would still be 2,295 non-radiotelephone companies that might qualify as small entities or small incumbent LECs. It seems certain that some of these carriers are not independently owned and operated, but we are unable at this time to estimate with greater precision the number of wireline carriers that would qualify as small business concerns under SBA's definition. Consequently, we estimate that fewer than 2,295 small telephone communications companies other than radiotelephone companies are small entities or small incumbent LECs that may be affected by the proposed rules, if adopted.

More specifically, the proposed changes to the accounting and reporting requirements in sections III.A.1, III.A.6, and III.B would only affect Class A companies, *i.e.*, companies with annual

revenues from regulated telecommunications operations that are equal to or above the indexed revenue threshold, currently $144 million. Presently, these companies are SBC Communications, Quest, Verizon, BellSouth Corporation, Cincinnati Bell, C–TEC, Sprint, Alltel Corporation, Frontier Corporation, and Citizens Telecom. These companies would not be considered ''small entities'' under the SBA definition. Therefore, it is extremely unlikely that any of the 2,295 small entity telephone companies would be affected by the proposals in section III.A.1, III.A.6, and III.B.

The proposals discussed in section III.A.2, 3, 4, 5, 7, and 8 could affect all local exchange carriers. Some of these companies may be considered ''small entities'' under the SBA definition. Therefore, it is possible that some of the 2,295 small entity telephone companies may be affected by the proposals in section III.A.2, 3, 4, 5, 7, and 8.

The proposals discussed in section III.C would affect only mid-sized carriers, *i.e.*, Class A carriers with aggregate revenues below $7 billion but equal to or above the indexed revenue threshold (currently $144 million). These companies would not be considered ''small entities'' under the SBA definition. Therefore, it is extremely unlikely that any of the 2,295 small entity telephone companies would be affected by the proposals in section III.C.

The proposals discussed in section IV could affect all local exchange carriers. Some of these companies may be considered ''small entities'' under the SBA definition. Therefore, it is possible that some of the 2,295 small entity telephone companies may be affected by the proposals in section IV.

Description of Proposed Reporting, Recordkeeping, and Other Compliance Requirements

This Notice of Proposed Rulemaking seeks to further reduce accounting and reporting requirements for Class A companies. In this Notice of Proposed Rulemaking, the Commission seeks comment on eliminating one-fourth of the Class A accounts from the Part 32 chart of accounts, reducing ARMIS reporting requirements, and streamlining other accounting rules. These proposals, if adopted, would result in fewer accounting requirements and reduced ARMIS reporting requirements for Class A companies. In some instances, the Commission seeks comment on whether additional accounts should be added to the Part 32 Chart of Accounts, to reflect changes in technology and new requirements under the Telecommunications Act of 1996. None of these proposals apply to small entities because they are not subject to these reporting requirements. As mentioned in section C, Class A companies are not small businesses, so these reporting and record-keeping requirements will not affect small entities.

In addition, in section III.A.2, 3, 4, 5, 7, and 8, the Notice of Proposed Rulemaking seeks comment on: streamlining inventory requirements in §§ 32.1220(h) and 32.2311(f); changing the threshold requirements in § 32.2003(b); adopting SFAS–116 for federal accounting purposes; and modifying the affiliate transactions rules, the definition of ''incidental activities,'' our expense limit rules, and cost allocation manual requirements. These proposals, if adopted, could affect both Class A and Class B companies, including small entities. If adopted, these proposals could significantly reduce the federal regulatory accounting requirements and costs associated with these requirements for the affected companies, including the small entities.

In section III.C, the Notice of Proposed Rulemaking also seeks comment on simplifying reporting requirements and eliminating cost allocation manual filing requirements for mid-sized carriers, including any small entities. This proposal, if adopted, would greatly reduce the reporting requirements and costs associated with these requirements for these companies, including any small entities.

In section IV, the Notice of Proposed Rulemaking seeks comment on triggers for more significant deregulation of accounting and reporting requirements for all carriers in a competitive marketplace, including small entities. Once the marketplace is competitive, regulatory accounting and reporting requirements and costs associated with these requirements for all carriers, including small entities may be greatly diminished, if not eliminated.

Steps Taken To Minimize Significant Economic Impact on Small Entities, and Significant Alternatives Considered

The RFA requires an agency to describe any significant alternatives that it has considered in reaching its proposed approach, which may include the following four alternatives (among others): (1) The establishment of differing compliance or reporting requirements or timetables that take into account the resources available to small entities; (2) the clarification, consolidation, or simplification of compliance or reporting requirements under the rule for small entities; (3) the use of performance, rather than design, standards; and (4) an exemption from coverage of the rule, or any part thereof, for small entities.

The rule changes proposed in this Notice of Proposed Rulemaking are reductions in our accounting requirements and ARMIS reporting requirements for Class A companies (*i.e.,* carriers with annual revenues from regulated telecommunications operations that are equal to or above the indexed revenue threshold, currently $144 million). These rule changes, as discussed in sections III.A.1, III.A.6, III.B, and III.C, only affect Class A companies and would not have a significant economic impact on small entities because the Class A companies, as identified in section C, are not small entities. The remaining rule changes proposed in the Notice of Proposed Rulemaking may affect all LECs. Our proposals, if adopted, would streamline the accounting and reporting rules and would significantly lessen regulatory requirements for all carriers, including small entities. This should produce a significant economic benefit to small entities. Alternatives considered for small entities subject to our accounting and reporting requirements, were to maintain our current rules or to consider changes proposed in this Notice of Proposed Rulemaking on a case-by-case basis in ongoing proceedings where related accounting changes may properly be considered within the scope of such proceedings. We believe that streamlining our current rules, however, would reduce regulatory burdens on carriers, including small entities. In section IV of the Notice of Proposed Rulemaking, we discuss eliminating accounting rules and reporting requirements as the local exchange market becomes competitive. This would result in a further reduction in the regulatory burden on small entities.

Federal Rules That May Duplicate, Overlap, or Conflict With the Proposed Rule

None.

C. Paperwork Reduction Act

As part of our continuing effort to reduce paperwork burdens, we invite the general public to take this opportunity to comment on information collections contained in this NPRM, as required by the Paperwork Reduction Act of 1995, Public Law 104–13. Public and agency comments are due at the same time as other comments on this NPRM. Comments should address: (a) Whether the proposed collection of information is necessary for the proper

performance of the functions of the Commission, including whether the information shall have practical utility; (b) the accuracy of the Commission's burden estimates; (c) ways to enhance the quality, utility, and clarity of the information collected; and (d) ways to minimize the burden of the collection of information on the respondents, including the use of automated collection techniques or other forms of information technology.

D. Comment Filing Procedures

Pursuant to §§ 1.415 and 1.419 of the Commission's rules, 47 CFR 1.415, 1.419, interested parties may file comments on Phase 2 on or before December 21, 2000, and reply comments on or before January 30, 2001. For Phase 3, interested parties may file comments on or before January 30, 2001, and reply comments on or before February 28, 2001. Comments may be filed using the Commission's Electronic Comment Filing System (ECFS) or by filing paper copies.

Comments filed through the ECFS can be sent as an electronic file via the Internet to http://www.fcc.gov/e-file/ecfs.html. Generally, only one copy of an electronic submission must be filed. If multiple docket or rulemaking numbers appear in the caption of this proceeding, however, commenters must transmit one electronic copy of the comments to each docket or rulemaking number referenced in the caption. In completing the transmittal screen, commenters should include their full name, Postal Service mailing address, and the applicable docket or rulemaking number. Parties may also submit an electronic comment by Internet e-mail. To get filing instructions for e-mail comments, commenters should send an e-mail to ecfs@fcc.gov, and should include the following words in the body of the message, ''get form your e-mail address.'' A sample form and directions will be sent in reply.

Parties who choose to file by paper must file an original and four copies of each filing. If more than one docket or rulemaking number appear in the caption of this proceeding, commenters must submit two additional copies for each additional docket or rulemaking number. All filings must be sent to the Commission's Secretary, Magalie Roman Salas, Office of the Secretary, Federal Communications Commission, 445 12th Street, S.W., Washington, D.C. 20554.

Parties who choose to file by paper should also submit their comments on diskette. These diskettes should be submitted to: Ernestine Creech, Accounting Safeguards Division, 445 12th Street, S.W., Washington, D.C. 20554. Such a submission should be on a 3.5-inch diskette formatted in an IBM compatible format using Word or compatible software. The diskette should be accompanied by a cover letter and should be submitted in ''read only'' mode. The diskette should be clearly labeled with the commenter's name, proceeding (including the docket number, in this case CC Docket No. 00–199, type of pleading (comment or reply comment), date of submission, and the name of the electronic file on the diskette. The label should also include the following phrase ''Disk Copy—Not an Original.'' Each diskette should contain only one party's pleadings, preferably in a single electronic file. In addition, commenters must send diskette copies to the Commission's copy contractor, International Transcription Service, Inc., 1231 20th Street, N.W., Washington, D.C. 20036.

Written comments by the public on the proposed and/or modified information collections are due on or before December 13, 2000. Written comments must be submitted by the Office of Management and Budget (OMB) on the proposed and/or modified information collections on or before January 12, 2001. In addition to filing comments with the Secretary, a copy of any comments on the information collections contained herein should be submitted to Judy Boley, Federal Communications Commission, Room 1–C804, 445 12th Street, S.W., Washington, DC 20554, or via the Internet to jboley@fcc.gov and to Edward Springer, OMB Desk Officer, 10236 NEOB, 725—17th Street, N.W., Washington, D.C. 20503.

III. Ordering Clauses

Pursuant to the authority contained in sections 4(i), 4(j), 11, 201(b), 303(r), and 403 of the Communications Act of 1934, as amended, 47 U.S.C. 154(i), 154(j), 161, 201(b), 303(r), and 403, this NPRM *is adopted*.

The Commission's Consumer Information Bureau, Reference Information Center, *shall send* a copy of this NPRM, including the Initial Regulatory Flexibility Analysis, to the Chief Counsel for Advocacy of the Small Business Administration.

Federal Communications Commission.

Magalie Roman Salas,

Secretary.

Appendix 1—USTA'S ARMIS Reporting Proposals

USTA proposes streamlining the following items:

1. Combine ARMIS 43–01, 02 [B1, I1], 03 and 04 (See USTA June 9 letter); allow reporting at OTC level (Operating Telephone Company) for majority of data (Proposed Table III, Separations and Access would be by study area).
2. Eliminate ARMIS 43–02 Schedules B4 and I2. (Note: USTA also proposed elimination of B12, which was eliminated in Phase 1.)
3. Modify required nonregulated adjustment threshold from $1 million per holding company to $1 million or 2% nonregulated expense; require aggregation of only material dollars rather than every dollar.
4. Eliminate ARMIS 43–07, Infrastructure Report.
5. Streamline ARMIS 43–08, Operating Data Report—Eliminate tables of access lines (2) and traffic data (see USTA Letter).
6. Eliminate ARMIS 495/A and 495/B Reports.
7. One definition for ''access lines'' should be used. (Billable Access lines currently in ARMIS 43–01).

[FR Doc. 00–28886 Filed 11–9–00; 8:45 am]

BILLING CODE 6712–01–U

FEDERAL COMMUNICATIONS COMMISSION

47 CFR Part 73

[DA 00–2374; MM Docket No. 00–149; RM–9940]

Radio Broadcasting Services; Smiley, TX

AGENCY: Federal Communications Commission.

ACTION: Proposed rule; dismissal.

SUMMARY: Smiley Community Radio Company filed a petition for rule making proposing the allotment of Channel 280A at Smiley, Texas, as the community's first local aural transmission service. *See* 65 FR 53689, September 5, 2000. On October 10, 2000, petitioner filed a request for withdrawal. A showing of continuing interest is required before a channel will be allotted. It is the Commission's policy to refrain from making an allotment to a community absent an expression of interest. No other comments were filed. Therefore, at the request of petitioner, we will dismiss the instant proposal.

FOR FURTHER INFORMATION CONTACT: Sharon P. McDonald, Mass Media Bureau, (202) 418–2180.

SUPPLEMENTARY INFORMATION: This is a synopsis of the Commission's Report and Order, MM Docket No. 00–149, adopted October 11, 2000, and released October 20, 2000. The full text of this Commission decision is available for inspection and copying during normal business hours in the FCC Reference Information Center (Room CY–A257), 445 12th Street, SW., Washington, DC.

The complete text of this decision may also be purchased from the Commission's copy contractors, International Transcription Service, Inc., (202) 857–3800, 1231 20th Street, NW., Washington, DC 20036.

Federal Communications Commission.

John A. Karousos,

Chief, Allocations Branch, Policy and Rules Division, Mass Media Bureau.

[FR Doc. 00–28883 Filed 11–9–00; 8:45 am]

BILLING CODE 6712–01–P

FEDERAL COMMUNICATIONS COMMISSION

47 CFR Part 73

[DA 00–2420; MM Docket No. 00–208; RM–9977]

Radio Broadcasting Services; Huachuca City, AZ

AGENCY: Federal Communications Commission.

ACTION: Proposed rule.

SUMMARY: This document requests comments on a petition for rule making filed on behalf of Santa Cruz Broadcasting, requesting the allotment of Channel 232A to Huachuca City, Arizona, as a first local aural transmission service. Information is requested regarding the attributes of Huachuca City to determine whether it is a *bona fide* community for allotment purposes. Additionally, as Huachuca City is located within 320 kilometers (199 miles) of the U.S.-Mexico border, and will result in short spacings to three Mexican allotments, concurrence of the Mexican government to the proposed allotment of Channel 232A to Huachuca City, as a specially-negotiated short-spaced allotment must be obtained. Coordinates used for this proposal are 31–32–30 NL and 110–23–20 WL.

DATES: Comments must be filed on or before December 18, 2000, and reply comments on or before January 2, 2001.

ADDRESSES: Secretary, Federal Communications Commission, Washington, DC 20554. In addition to filing comments with the FCC, interested parties should serve the petitioner's counsel, as follows: Susan A. Marshall Esq., Fletcher, Heald & Hildreth, PLC, 1300 North 17th Street, 11th Floor, Arlington, VA 22209.

FOR FURTHER INFORMATION CONTACT: Nancy Joyner, Mass Media Bureau, (202) 418–2180.

SUPPLEMENTARY INFORMATION: This is a synopsis of the Commission's Notice of Proposed Rule Making, MM Docket No. 00–208, adopted October 18, 2000, and released October 27, 2000. The full text of this Commission decision is available for inspection and copying during normal business hours in the FCC's Reference Information Center (Room CY–A257), 445 Twelfth Street, SW., Washington, DC. The complete text of this decision may also be purchased from the Commission's copy contractor, International Transcription Service, Inc., 1231 20th Street, NW., Washington, DC 20036, (202) 857–3800.

Provisions of the Regulatory Flexibility Act of 1980 do not apply to this proceeding.

Members of the public should note that from the time a Notice of Proposed Rule Making is issued until the matter is no longer subject to Commission consideration or court review, all *ex parte* contacts are prohibited in Commission proceedings, such as this one, which involve channel allotments. See 47 CFR 1.1204(b) for rules governing permissible *ex parte* contacts.

For information regarding proper filing procedures for comments, see 47 CFR 1.415 and 1.420.

List of Subjects in 47 CFR Part 73

Radio broadcasting.

For the reasons discussed in the preamble, the Federal Communications Commission proposes to amend 47 CFR part 73 as follows:

PART 73—RADIO BROADCAST SERVICES

1. The authority citation for part 73 continues to read as follows:

Authority: 47 U.S.C. 154, 303, 334 and 336.

§ 73.202 [Amended]

2. Section 73.202(b), the Table of FM Allotments under Arizona, is amended by adding Huachuca City, Channel 232A.

Federal Communications Commission.

John A. Karousos,

Chief, Allocations Branch, Policy and Rules Division, Mass Media Bureau.

[FR Doc. 00–28917 Filed 11–9–00; 8:45 am]

BILLING CODE 6712–01–U

FEDERAL COMMUNICATIONS COMMISSION

47 CFR Part 73

[DA 00–2420; MM Docket No. 00–209; RM–9978]

Radio Broadcasting Services; Rio Rico, AZ

AGENCY: Federal Communications Commission.

ACTION: Proposed rule.

SUMMARY: This document requests comments on a petition for rule making filed on behalf of Santa Cruz Broadcasting, requesting the allotment of Channel 300A to Rio Rico, Arizona, as a first local aural transmission service. Information is requested regarding the attributes of Rio Rico to determine whether it is a *bona fide* community for allotment purposes. Additionally, as Rio Rico is located within 320 kilometers (199 miles) of the U.S.-Mexico border, and will result in short spacings to two Mexican allotments, concurrence of the Mexican government to the proposed allotment of Channel 300A to Rio Rico, as a specially-negotiated short-spaced allotment must be obtained. Coordinates used for this proposal are 31–24–00 NL and 110–57–30 WL.

DATES: Comments must be filed on or before December 18, 2000, and reply comments on or before January 2, 2001.

ADDRESSES: Secretary, Federal Communications Commission, Washington, DC 20554. In addition to filing comments with the FCC, interested parties should serve the petitioner's counsel, as follows: Susan A. Marshall Esq., Fletcher, Heald & Hildreth, PLC, 1300 North 17th Street, 11th Floor, Arlington, VA 22209.

FOR FURTHER INFORMATION CONTACT: Nancy Joyner, Mass Media Bureau, (202) 418–2180.

SUPPLEMENTARY INFORMATION: This is a synopsis of the Commission's Notice of Proposed Rule Making, MM Docket No. 00–209, adopted October 18, 2000, and released October 27, 2000. The full text of this Commission decision is available for inspection and copying during normal business hours in the FCC's Reference Information Center (Room CY–A257), 445 Twelfth Street, SW., Washington, DC. The complete text of this decision may also be purchased from the Commission's copy contractor, International Transcription Service, Inc., 1231 20th Street, NW., Washington, DC 20036, (202) 857–3800.

Provisions of the Regulatory Flexibility Act of 1980 do not apply to this proceeding.

Members of the public should note that from the time a Notice of Proposed Rule Making is issued until the matter is no longer subject to Commission consideration or court review, all *ex parte* contacts are prohibited in Commission proceedings, such as this one, which involve channel allotments. See 47 CFR 1.1204(b) for rules governing permissible *ex parte* contacts.

For information regarding proper filing procedures for comments, see 47 CFR 1.415 and 1.420.

List of Subjects in 47 CFR Part 73

Radio broadcasting.

For the reasons discussed in the preamble, the Federal Communications Commission proposes to amend 47 CFR part 73 as follows:

PART 73—RADIO BROADCAST SERVICES

1. The authority citation for part 73 continues to read as follows:

Authority: 47 U.S.C. 154, 303, 334 and 336.

§ 73.202 [Amended]

2. Section 73.202(b), the Table of FM Allotments under Arizona, is amended by adding Rio Rico, Channel 300A.

Federal Communications Commission.

John A. Karousos,

Chief, Allocations Branch, Policy and Rules Division, Mass Media Bureau.

[FR Doc. 00–28916 Filed 11–9–00; 8:45 am]

BILLING CODE 6712–01–U

FEDERAL COMMUNICATIONS COMMISSION

47 CFR Part 73

[DA 00–2420; MM Docket No. 00–210; RM–9979]

Radio Broadcasting Services; Sonoita, AZ

AGENCY: Federal Communications Commission.

ACTION: Proposed rule.

SUMMARY: This document requests comments on a petition for rule making filed on behalf of Santa Cruz Broadcasting, requesting the allotment of Channel 263A to Sonoita, Arizona, as a first local aural transmission service. Information is requested regarding the attributes of Sonoita to determine whether it is a *bona fide* community for allotment purposes. Additionally, as Sonoita is located within 320 kilometers (199 miles) of the U.S.-Mexico border, concurrence of the Mexican government to the proposed allotment of Channel 263A to Sonoita must be obtained. Coordinates used for this proposal are 31–40–46 NL and 110–39–17 WL.

DATES: Comments must be filed on or before December 18, 2000, and reply comments on or before January 2, 2001.

ADDRESSES: Secretary, Federal Communications Commission, Washington, DC 20554. In addition to filing comments with the FCC, interested parties should serve the petitioner's counsel, as follows: Susan A. Marshall Esq., Fletcher, Heald & Hildreth, PLC, 1300 North 17th Street, 11th Floor, Arlington, VA 22209.

FOR FURTHER INFORMATION CONTACT: Nancy Joyner, Mass Media Bureau, (202) 418–2180.

SUPPLEMENTARY INFORMATION: This is a synopsis of the Commission's Notice of Proposed Rule Making, MM Docket No. 00–210, adopted October 18, 2000, and released October 27, 2000. The full text of this Commission decision is available for inspection and copying during normal business hours in the FCC's Reference Information Center (Room CY–A257), 445 Twelfth Street, SW., Washington, DC. The complete text of this decision may also be purchased from the Commission's copy contractor, International Transcription Service, Inc., 1231 20th Street, NW., Washington, DC 20036, (202) 857–3800.

Provisions of the Regulatory Flexibility Act of l980 do not apply to this proceeding.

Members of the public should note that from the time a Notice of Proposed Rule Making is issued until the matter is no longer subject to Commission consideration or court review, all *ex parte* contacts are prohibited in Commission proceedings, such as this one, which involve channel allotments. See 47 CFR 1.1204(b) for rules governing permissible *ex parte* contacts.

For information regarding proper filing procedures for comments, see 47 CFR 1.415 and 1.420.

List of Subjects in 47 CFR Part 73

Radio broadcasting.

For the reasons discussed in the preamble, the Federal Communications Commission proposes to amend 47 CFR part 73 as follows:

PART 73—RADIO BROADCAST SERVICES

1. The authority citation for part 73 continues to read as follows:

Authority: 47 U.S.C. 154, 303, 334 and 336.

§ 73.202 [Amended]

2. Section 73.202(b), the Table of FM Allotments under Arizona, is amended by adding Sonoita, Channel 263A.

Federal Communications Commission.

John A. Karousos,

Chief, Allocations Branch, Policy and Rules Division, Mass Media Bureau.

[FR Doc. 00–28915 Filed 11–9–00; 8:45 am]

BILLING CODE 6712–01–U

FEDERAL COMMUNICATIONS COMMISSION

47 CFR Part 73

[DA 00–2420; MM Docket No. 00–211; RM–9993]

Radio Broadcasting Services; Pine Level, AL

AGENCY: Federal Communications Commission.

ACTION: Proposed rule.

SUMMARY: This document requests comments on a petition for rule making filed on behalf of Susannah Lane Hodges, requesting the allotment of Channel 248A to Pine Level, Alabama, as a first local aural transmission service. Petitioner is requested to provide additional information to establish that Pine Level is a *bona fide* community for allotment purposes. Coordinates used for this proposal are 32–04–04 NL and 86–03–35 WL.

DATES: Comments must be filed on or before December 18, 2000, and reply comments on or before January 2, 2001.

ADDRESSES: Secretary, Federal Communications Commission, Washington, DC 20554. In addition to filing comments with the FCC, interested parties should serve the petitioner's counsel, as follows: John A. Borsari, Esq., Borsari & Assoc., PLC, P.O. Box 29, Arlington, VA 22210.

FOR FURTHER INFORMATION CONTACT: Nancy Joyner, Mass Media Bureau, (202) 418–2180.

SUPPLEMENTARY INFORMATION: This is a synopsis of the Commission's Notice of Proposed Rule Making, MM Docket No. 00–211, adopted October 18, 2000, and released October 27, 2000. The full text of this Commission decision is available for inspection and copying during normal business hours in the FCC's Reference Information Center (Room CY–A257), 445 Twelfth Street, SW., Washington, DC. The complete text of this decision may also be purchased from the Commission's copy contractor, International Transcription Service, Inc., 1231 20th Street, NW., Washington, DC 20036; (202) 857–3800.

Provisions of the Regulatory Flexibility Act of 1980 do not apply to this proceeding.

Members of the public should note that from the time a Notice of Proposed Rule Making is issued until the matter is no longer subject to Commission consideration or court review, all *ex parte* contacts are prohibited in Commission proceedings, such as this one, which involve channel allotments. See 47 CFR 1.1204(b) for rules governing permissible *ex parte* contacts.

For information regarding proper filing procedures for comments, see 47 CFR 1.415 and 1.420.

List of Subjects in 47 CFR Part 73

Radio broadcasting.

For the reasons discussed in the preamble, the Federal Communications Commission proposes to amend 47 CFR part 73 as follows:

PART 73—RADIO BROADCAST SERVICES

1. The authority citation for part 73 continues to read as follows:

Authority: 47 U.S.C. 154, 303, 334 and 336.

§ 73.202 [Amended]

2. Section 73.202(b), the Table of FM Allotments under Alabama, is amended by adding Pine Level, Channel 248A.

Federal Communications Commission.

John A. Karousos,

Chief, Allocations Branch, Policy and Rules Division, Mass Media Bureau.

[FR Doc. 00–28914 Filed 11–9–00; 8:45 am]

BILLING CODE 6712–01–P

FEDERAL COMMUNICATIONS COMMISSION

47 CFR Part 73

[DA 00–2422; MM Docket Nos. 00–215, 00–216; RM–9994, RM–9995]

Radio Broadcasting Services (Aspen, Colorado; McKinleyville, California)

AGENCY: Federal Communications Commission.

ACTION: Proposed rule.

SUMMARY: The Commission seeks comment on two petitions for rule making. The first, filed by Roaring Forks Broadcasting, Inc., requests the allotment of Channel 228A at Aspen, Colorado, as the community's third local FM service. The second, filed by Four Rivers Broadcasting Inc., requests the allotment of Channel 236C3 at McKinleyville, California, as the community's first local aural transmission service.

Channel 228A can be allotted to Aspen in compliance with the Commission's minimum distance separation requirements, with respect to domestic allotments, without the imposition of a site restriction, at coordinates 39–11–24 NL and 106–49–06 WL. Channel 236C3 can be allotted to McKinleyville in compliance with the Commission's minimum distance separation requirements, with respect to domestic allotments, without the imposition of a site restriction at coordinates 40–56–42 NL and 124–05–54 WL.

DATES: Comments must be filed on or before December 18, 2000, and reply comments on or before January 2, 2001.

ADDRESSES: Federal Communications Commission, 445 12th Street, SW., Room TW–A325, Washington, DC 20554. In addition to filing comments with the FCC, interested parties in MM Docket No. 00–215 should serve petitioner Four Rivers Broadcasting Inc., or its counsel or consultant, as follows: Meredith Senter, Jr., Leventhal, Senter & Lerman, Suite 600, Washington, DC 20006–1809. Interested parties in MM Docket No. 00–216 should serve petitioner Four Rivers Broadcasting, Inc., or its counsel or consultant, as follows: Howard M. Weiss, Fletcher, Heald & Hildreth, 1300 N. 17th St., 11th Floor, Arlington, VA 22209.

FOR FURTHER INFORMATION CONTACT: Victoria M. McCauley, Mass Media Bureau, (202) 418–2180.

SUPPLEMENTARY INFORMATION: This is a synopsis of the Commission's Notice of Proposed Rule Making, Docket Nos. 00–215, 00–216, adopted October 18, 2000, and released October 27, 2000. The full text of this Commission decision is available for inspection and copying during normal business hours in the FCC Reference Center (Room 239), 445 12th Street, SW, Washington, DC. The complete text of this decision may also be purchased from the Commission's copy contractor, International Transcription Services, Inc., (202) 857–3800, 1231 20th Street, NW, Washington, DC 20036.

Provisions of the Regulatory Flexibility Act of 1980 do not apply to this proceeding. Members of the public should note that from the time a Notice of Proposed Rule Making is issued until the matter is no longer subject to Commission consideration or court review, all *ex parte* contacts are prohibited in Commission proceedings, such as this one, which involve channel allotments. See 47 CFR 1.1204(b) for rules governing permissible *ex parte* contact.

For information regarding proper filing procedures for comments, see 47 CFR 1.415 and 1.420.

List of Subjects in 47 CFR Part 73

Radio broadcasting.

For the reasons discussed in the preamble, the Federal Communications Commission proposes to amend 47 CFR part 73 as follows:

PART 73—RADIO BROADCAST SERVICES

1. The authority citation for Part 73 continues to read as follows:

Authority: 47 U.S.C 154, 303, 334 and 336.

§ 73.202 [Amended]

2. Section 73.202(b), the Table of FM Allotments under Colorado, is amended by adding Channel 228A at Aspen.

3. Section 73.202(b), the Table of FM Allotments under California, is amended by adding McKinleyville, Channel 236C3.

Federal Communications Commission.

John A. Karousos,

Chief, Allocations Branch, Policy and Rules Division, Mass Media Bureau.

[FR Doc. 00–28913 Filed 11–9–00; 8:45 am]

BILLING CODE 6712–01–U

FEDERAL COMMUNICATIONS COMMISSION

47 CFR Part 73

[DA 00–2421; MM Docket No. 00–213; RM–9990]

Radio Broadcasting Services; Pigeon Forge, TN

AGENCY: Federal Communications Commission.

ACTION: Proposed rule.

SUMMARY: The Commission requests comments on a petition filed by Bernice P. Hedrick proposing the allotment of Channel 292A at Pigeon Forge, TN as the community's first local aural transmission service. Channel 292A can be allotted to Pigeon Forge in compliance with the Commission's minimum distance separation requirements with a site restriction of 7.5 kilometers (4.7 miles) southeast of city reference coordinates. The coordinates for Channel 292A at Pigeon Forge are 35–43–33 North Latitude and 83–31–18 West Longitude.

DATES: Comments must be filed on or before December 18, 2000, and reply comments on or before January 2, 2001.

ADDRESSES: Secretary, Federal Communications Commission, Washington, DC 20554. In addition to filing comments with the FCC, interested parties should serve the petitioner, as follows: Bernice P. Hedrick, P.O. Box 27, 317 Stonegables Ct., Gray, GA 31032.

FOR FURTHER INFORMATION CONTACT: Arthur D. Scrutchins, Mass Media Bureau, (202) 418–2180.

SUPPLEMENTARY INFORMATION: This is a synopsis of the Commission's Notice of

Proposed Rule Making, MM Docket No. 00–213; adopted October 18, 2000 and released October 27, 2000. The full text of this Commission decision is available for inspection and copying during normal business hours in the FCC Reference Information Center (Room CY–A257), 445 12th Street, SW., Washington, DC. The complete text of this decision may also be purchased from the Commission's copy contractor, International Transcription Service, Inc., (202) 857–3800, 1231 20th Street, NW., Washington, DC 20036.

Provisions of the Regulatory Flexibility Act of 1980 do not apply to this proceeding.

Members of the public should note that from the time a Notice of Proposed Rule Making is issued until the matter is no longer subject to Commission consideration or court review, all *ex parte* contacts are prohibited in Commission proceedings, such as this one, which involve channel allotments. See 47 CFR 1.1204(b) for rules governing permissible *ex parte* contacts.

For information regarding proper filing procedures for comments, see 47 CFR 1.415 and 1.420.

List of Subjects in 47 CFR Part 73

Radio broadcasting.

For the reasons discussed in the preamble, the Federal Communications Commission proposes to amend 47 CFR part 73 as follows:

PART 73—RADIO BROADCAST SERVICES

1. The authority citation for part 73 continues to read as follows:

Authority: 47 U.S.C. 154, 303, 334 and 336.

§ 73.202 [Amended]

2. Section 73.202(b), the Table of FM Allotments under Tennessee, is amended by adding Pigeon Forge, Channel 292A.

Federal Communications Commission.

John A. Karousos,

Chief, Allocations Branch, Policy and Rules Division, Mass Media Bureau.

[FR Doc. 00–28912 Filed 11–9–00; 8:45 am]

BILLING CODE 6712–01–P

FEDERAL COMMUNICATIONS COMMISSION

47 CFR Part 73

[DA 00–2421; MM Docket No. 00–214; RM–9989]

Radio Broadcasting Services; Lincolnton, GA

AGENCY: Federal Communications Commission.

ACTION: Proposed rule.

SUMMARY: The Commission requests comments on a petition filed by H. David Hedrick proposing the allotment of Channel 254A at Lincolnton, GA, as the community's first local aural transmission service. Channel 254A can be allotted to Lincolnton in compliance with the Commission's minimum distance separation requirements with a site restriction of 13 kilometers (8.1 miles) south of city reference coordinates. The coordinates for Channel 254A at Lincolnton are 33–40–37 North Latitude and 82–30–18 West Longitude.

DATES: Comments must be filed on or before December 18, 2000, and reply comments on or before January 2, 2001.

ADDRESSES: Secretary, Federal Communications Commission, Washington, DC 20554. In addition to filing comments with the FCC, interested parties should serve the petitioner, as follows: H. David Hedrick, P.O. Box 27, 317 Stonegables Ct., Gray, GA 31032.

FOR FURTHER INFORMATION CONTACT: Arthur D. Scrutchins, Mass Media Bureau, (202) 418–2180.

SUPPLEMENTARY INFORMATION: This is a synopsis of the Commission's Notice of Proposed Rule Making, MM Docket No. 00–214; adopted October 18, 2000 and released October 27, 2000. The full text of this Commission decision is available for inspection and copying during normal business hours in the FCC Reference Information Center (Room CY–A257), 445 12th Street, SW, Washington, DC. The complete text of this decision may also be purchased from the Commission's copy contractor, International Transcription Service, Inc., (202) 857–3800, 1231 20th Street, NW., Washington, DC 20036.

Provisions of the Regulatory Flexibility Act of 1980 do not apply to this proceeding.

Members of the public should note that from the time a Notice of Proposed Rule Making is issued until the matter is no longer subject to Commission consideration or court review, all *ex parte* contacts are prohibited in Commission proceedings, such as this one, which involve channel allotments. See 47 CFR 1.1204(b) for rules governing permissible *ex parte* contacts.

For information regarding proper filing procedures for comments, see 47 CFR 1.415 and 1.420.

List of Subjects in 47 CFR Part 73

Radio broadcasting.

For the reasons discussed in the preamble, the Federal Communications Commission proposes to amend 47 CFR part 73 as follows:

PART 73—RADIO BROADCAST SERVICES

1. The authority citation for part 73 continues to read as follows:

Authority: 47 U.S.C. 154, 303, 334 and 336.

§ 73.202 [Amended]

2. Section 73.202(b), the Table of FM Allotments under Georgia, is amended by adding Lincolnton, Channel 254A.

Federal Communications Commission.

John A. Karousos,

Chief, Allocations Branch, Policy and Rules Division, Mass Media Bureau.

[FR Doc. 00–28911 Filed 11–9–00; 8:45 am]

BILLING CODE 6712–01–P

FEDERAL COMMUNICATIONS COMMISSION

47 CFR Part 73

[DA 00–2421; MM Docket No. 00–212; RM–9988]

Radio Broadcasting Services; Glenville, WV

AGENCY: Federal Communications Commission.

ACTION: Proposed rule.

SUMMARY: The Commission requests comments on a petition for rule making filed by Donald Staats proposing the allotment of Channel 299A at Glenville, WV, as the community's first local aural transmission service. Channel 299A can be allotted to Glenville in compliance with the Commission's minimum distance separation requirements with a site restriction of 1.0 kilometers (0.6 miles) southwest of city reference coordinates. The coordinates for Channel 299A at Glenville are 38–55–43 North Latitude and 80–50–47 West Longitude.

DATES: Comments must be filed on or before December 18, 2000, and reply comments on or before January 2, 2001.

ADDRESSES: Secretary, Federal Communications Commission, Washington, DC 20554. In addition to filing comments with the FCC, interested parties should serve the petitioner, as follows: Donald Staats, P.O. Box 1346, Parkersburg, WV 26102.

FOR FURTHER INFORMATION CONTACT: Arthur D. Scrutchins, Mass Media Bureau, (202) 418–2180.

SUPPLEMENTARY INFORMATION: This is a synopsis of the Commission's Notice of Proposed Rule Making, MM Docket No. 00–212; adopted October 18, 2000 and

released October 27, 2000. The full text of this Commission decision is available for inspection and copying during normal business hours in the FCC Reference Information Center (Room CY–A257), 445 12th Street, SW., Washington, DC. The complete text of this decision may also be purchased from the Commission's copy contractor, International Transcription Service, Inc., (202) 857–3800, 1231 20th Street, NW., Washington, DC 20036.

Provisions of the Regulatory Flexibility Act of 1980 do not apply to this proceeding.

Members of the public should note that from the time a Notice of Proposed Rule Making is issued until the matter is no longer subject to Commission consideration or court review, all *ex parte* contacts are prohibited in Commission proceedings, such as this one, which involve channel allotments. See 47 CFR 1.1204(b) for rules governing permissible *ex parte* contacts.

For information regarding proper filing procedures for comments, see 47 CFR 1.415 and 1.420.

List of Subjects in 47 CFR Part 73

Radio broadcasting.

For the reasons discussed in the preamble, the Federal Communications Commission proposes to amend 47 CFR part 73 as follows:

PART 73—RADIO BROADCAST SERVICES

1. The authority citation for part 73 continues to read as follows:

Authority: 47 U.S.C. 154, 303, 334 and 336.

§ 73.202 [Amended]

2. Section 73.202(b), the Table of FM Allotments under West Virginia, is amended by adding Glenville, Channel 299A.

Federal Communications Commission.

John A. Karousos,

Chief, Allocations Branch, Policy and Rules Division, Mass Media Bureau.

[FR Doc. 00–28910 Filed 11–9–00; 8:45 am]

BILLING CODE 6712–01–P

DEPARTMENT OF TRANSPORTATION

National Highway Traffic Safety Administration

49 CFR Part 571

[Docket No. NHTSA–00–8248]

RIN 2127–AF36

Federal Motor Vehicle Safety Standards; Fuel System Integrity

AGENCY: National Highway Traffic Safety Administration (NHTSA), Department of Transportation (DOT).

ACTION: Notice of proposed rulemaking (NPRM).

SUMMARY: We are proposing to upgrade the rear impact test in the Federal motor vehicle safety standard on fuel system integrity. That standard currently specifies that the rear of the test vehicle is to be impacted with a flat rigid barrier at speeds up to 48 km/h (30 mph). Under the proposal, we would replace that full rear impact test procedure with an offset rear impact test procedure specifying that only a portion of the width of the rear of vehicles would be impacted, that a deformable and lighter barrier would be used, and that the test would be conducted at 80 km/h (50 mph). We tentatively conclude that the new, more stringent test procedure would save lives and prevent injuries.

We are also proposing to change the standard's procedure for side impact tests. Currently, the standard specifies a side impact test procedure that differs from that specified in our standard on side impact protection. We are proposing to specify that the test procedure in the side impact protection standard be used for both standards. We tentatively conclude that this change would provide a more realistic test, increase safety and reduce testing costs.

DATES: You should submit your comments early enough to ensure that Docket Management receives them not later than January 12, 2001.

ADDRESSES: You may submit your comments in writing to: Docket Management, Room PL–401, 400 Seventh Street, SW, Washington, DC, 20590. You may also submit your comments electronically by logging onto the Dockets Management System website at http://dms.dot.gov. Click on ''Help & Information'' or ''Help/Info'' to obtain instructions for filing the document electronically.

Regardless of how you submit your comments, you should mention the docket number of this document.

FOR FURTHER INFORMATION CONTACT: For non-legal issues, you may call Dr. William J. J. Liu, Office of Vehicle Safety Standards, (Telephone 202–366–2264) (FAX 202–366–4329).

For legal issues, you may call Mr. Stephen Wood, NCC–20, Assistant Chief Counsel for Rulemaking, Office of Chief Counsel, (Telephone 202–366–2992) (FAX 202–366–3820).

You may send mail to both of these officials at National Highway Traffic Safety Administration, 400 Seventh St., SW, Washington, DC, 20590.

You may call Docket Management at 202–366–9324. You may visit the Docket from 10:00 a.m. to 5:00 p.m., Monday through Friday.

SUPPLEMENTARY INFORMATION:

Table of Contents

I. Overview of this Rulemaking
II. Existing Standard
III. Current Safety Problem
IV. 1995 Advanced Notice of Proposed Rulemaking (ANPRM)
A. Component Performance (Phase 1)
B. System Performance (Phase 2)
C. Environmental and Aging Effects (Phase 3)
V. Public Comments on ANPRM
A. Comments on Component Performance
B. Comments on System Performance
C. Comments on Environmental and Aging Effects
VI. Agency's Response to Comments on ANPRM
A. NHTSA's Component Performance Activities
B. NHTSA's System Performance Activities
1. Analyses of FARS and NASS Data on Fire-Related Rear Impact Crashes
2. Offset Rear Impact Vehicle Crash Tests
3. Analysis of Side Impact Test Procedure
C. Environmental and Aging Effects
D. Comparison of U.S. and Foreign Fuel System Safety Requirements
VII. Proposal to Replace Standard No. 301's Rear and Lateral Impact Test Procedures
A. Proposed Offset Rear Impact Test Procedure
B. Proposed Side Impact Test Procedure
C. Additional Considerations
1. Door System Integrity
2. Lead Time
3. Request for Comments on Particular Issues
VIII. Rulemaking Analyses
A. Executive Order 12866 and DOT Regulatory Policies and Procedures
B. Regulatory Flexibility Act
C. National Environmental Policy Act
D. Executive Order 13132 (Federalism)
E. Unfunded Mandates Act
F. Civil Justice Reform
G. National Technology Transfer and Advancement Act
H. Paperwork Reduction Act
I. Plain Language
IX. Submission of Comments
X. Proposed Regulatory Text

I. Overview of this Rulemaking

On April 12, 1995, we published an Advance Notice of Proposed Rulemaking (ANPRM) (60 FR 18566)

announcing our plans to consider upgrading Standard No. 301, Fuel system integrity.[1] Specifically, we announced our plans to consider research and rulemaking activities related to amending Standard No. 301 to:

- define performance criteria for fuel system components directed at reducing the occurrence and spread of vehicle fires;
- modify the existing Standard No. 301 crash test procedures and performance criteria to better simulate the events that lead to serious injury and fatalities in fires; and,
- define the role of environmental and aging factors such as corrosion and vibration as they affect fuel system integrity, and, if appropriate, specify performance criteria related to this area.

Due to the varying complexity of the above three activities, we also announced that we were considering pursuing a three-phase approach to upgrading the standard:

- Phase 1 would focus on requirements for component performance.
- Phase 2 would address system performance.
- Phase 3 would address issues related to environmental and aging effects.

After evaluating the research related to the frontal and rear impact requirements and the comments submitted in response to the ANPRM, we have decided not to pursue rulemaking related to Phases 1 and 3 at this time. Further analysis by NHTSA of the results of research related to fuel system components conducted by the agency and General Motors (GM) is needed before we can determine whether rulemaking is appropriate and, if so, what form it should take.[2] In addition, we believe that further studies are needed to define the problems associated with environmental and aging effects and determine whether rulemaking would be appropriate to address them.[3]

After evaluating the research related to Phase 2 and the comments submitted in response to the ANPRM, we have tentatively concluded that a more stringent rear impact test procedure would save lives and reduce injuries. We are, therefore, proposing to strengthen the current crash requirements applicable to vehicles with a gross vehicle weight rating (GVWR) of 4,536 kg (10,000 pounds) or less. Specifically, we are proposing to replace Standard No. 301's current rear impact test procedure with one that involves striking the rear of the test vehicle at 80 km/h (50 mph) with a 1,368 kg (3,015 lb) moving deformable barrier at a 70 percent overlap with the test vehicle. We are also proposing to replace Standard No. 301's lateral impact test procedure with the current side impact test procedure of Standard No. 214, Side impact protection. We tentatively conclude that these changes would help to preserve fuel system integrity in a crash, thereby helping to prevent fire-related fatalities and injuries. In addition, we tentatively conclude that the specification of a single lateral impact test procedure instead of two different test procedures would reduce manufacturer certification and agency enforcement costs.

II. Existing Standard

Standard No. 301 sets performance requirements for the fuel systems of light vehicles, *i.e.*, vehicles with a gross vehicle weight rating (GVWR) of 4,536 kg (10,000 pounds) or less. The standard, which was issued in the 1970s, limits the amount of fuel spillage from fuel systems of vehicles during and after being subjected to a frontal, rear, or lateral impact test.

In the frontal impact test, a vehicle is driven forward into a fixed barrier at 48 km/h (30 mph), while in the side impact test, a 1,814 kg (4,000 lb) barrier moving at 32 km/h (20 mph) is guided into the side of a stationary vehicle, and in the rear impact test, a 1,814 kg (4,000 lb) barrier moving at 48 km/h (30 mph) is guided into the rear of a stationary vehicle. The standard limits fuel spillage from crash-tested vehicles to 28 grams (1 ounce) by weight during the time period beginning with the start of the impact and ending with the cessation of vehicle motion and to a total of 142 grams (5 ounces) by weight during the 5-minute period beginning with the cessation of motion. During the 25-minute period beginning with the end of the 5-minute period, fuel spillage during any 1-minute interval is limited to 28 grams (1 ounce) by weight.

Similar fuel spillage limits apply to vehicles tested in accordance with the standard's static rollover test procedure. The rollover test is conducted after frontal, rear and lateral impact tests.

III. Current Safety Problem

Preserving fuel system integrity in a crash to prevent occupant exposure to fire is critical. Although vehicle fires are relatively rare events (occurring in only one percent of vehicles in towaway crashes), they tend to be severe in terms of casualties. According to an analysis of the agency's Fatality Analysis Reporting System (FARS) in 1998, four percent (1,411) of light vehicle occupant fatalities occurred in crashes involving fire.[4] Overall, the fire itself was deemed to be the most harmful event in the vehicle for about 20 percent (282) of these fatalities.

An analysis of 1991–1998 National Automotive Sampling System (NASS) data shows that about 12,941 occupants per year were exposed to fire in passenger cars and light vehicles (vans, pickup trucks, and multipurpose vehicles with GVWR of 4,536 kg (10,000 lb) or less) that were towed away from the fire. Of those occupants, about 1,062 (8 percent) received moderate or severe burns (AIS 2 and greater). Three-quarters of those with moderate and more severe burns had second or third degree burns over more than ninety percent of the body; maximum-severity (AIS 6) burns are nearly always fatal. These statistics underscore the importance of preserving fuel system integrity in a crash in order to prevent vehicle fires.

IV. 1995 Advance Notice of Proposed Rulemaking (ANPRM)

In the 1995 ANPRM, we announced our plans to consider upgrading Standard No. 301. We explained that we were considering using a three-phase approach to upgrade the requirements of Standard No. 301. Phase 1 would focus on requirements for component

[1] Previously, on December 14, 1992, we published a Request for Comments notice (57 FR 59041, Docket No. 92–66, Notice 1) stating that we were "considering initiating rulemaking to upgrade the protection currently provided by" Standard No. 301. The notice also requested answers to specific questions related to test impact speeds, impact barriers, effect of vehicle aging on the likelihood of fire, contribution of occupant entrapment to the likelihood of fire-related injuries, etc.

[2] On December 2, 1994, the Secretary of Transportation announced a settlement of an investigation by NHTSA of an alleged safety defect in certain GM pickup trucks with fuel tanks mounted outside the frame rails. Under that settlement, GM is contributing over $51.3 million for a variety of safety initiatives. Among other things, the settlement is funding research on ways to reduce the occurrence and effects of post-crash fires. All relevant results of this research are being placed in dockets NHTSA–98–3585, NHTSA–98–3588, Docket No. 96–GMRSCH–GR, and Docket No. 95–20-GR.

In addition, GM is conducting an extensive research program related to engine component fires and its propagation into the occupant compartment. Depending on the results of GM's research (which was officially completed in April 2000), we may revisit our decision with respect to Phase 1.

[3] As part of the GM settlement, GM is conducting research on environmental factors and aging effects on fuel system integrity and is preparing a report of its findings. Depending on the results of GM's research, we may also revisit this issue in the future.

[4] These fatalities included fatalities due to burns and/or impact injuries, but not those due to asphyxiation.

performance, Phase 2 would address system performance, and Phase 3 would address issues related to environmental and aging effects. We sought comment on this approach as well as several other issues.

A. Component Performance (Phase 1)

We explained that our focus in Phase 1 was on developing component performance criteria aimed at shutting down the fuel supply and potential fire ignition sources in a crash to help reduce the occurrence and effects of a fire should a breach in the fuel system occur. Quickly shutting off the fuel flow during or immediately after a crash would eliminate a major fire and fuel source and should, therefore, both reduce fires and limit the spread of fire, if one were to start. Phase 1 would also focus on minimizing the possibility of an electrical spark of sufficient intensity to act as an ignition source. Finally, it would explore other means for reducing fires (e.g., engine fire extinguishers). While these criteria would primarily address fires that originate in the engine compartment due to frontal impacts, they would also help to shut off the fuel flow for all crash modes, including a rollover crash.

In the ANPRM, we sought comment about component test requirements for fuel tanks, fuel pumps, the vehicle's electrical system, and engine fire extinguishers. We requested information on the performance, cost, and practicability aspects of various systems for shutting off the fuel flow and the electric power. We also requested comments on ways to develop practicable test procedures and to define specific criteria with sufficient objectivity that test variability would be minimal.

We also explained that we believed that the technology already existed for detecting and identifying conditions when the fuel flow should be shut off. Most new vehicles sold in the United States were already equipped with devices that shut off the fuel pump in any collision that causes the engine to stop.[5] Other vehicles were equipped with inertia switches that shut off the fuel flow and/or the electric current.[6] We also discussed how fuel system components had to operate in a real-world environment surrounded by extreme conditions imposed by modern engine technology. We explained that the materials and parts used to assemble fuel system components were already subject to manufacturers' specifications, which were often derived from or directly related to other engineering standards such as those of the American Society for Testing and Materials (ASTM). Some of the test requirements are generic to many of the ASTM standards, for example: vibration, shock, endurance testing, temperature cycling, temperature extremes, and compatibility with other materials.

Finally, we also sought comment regarding the extent and scope of component test requirements that could be developed for inclusion in Standard No. 301. We identified the following fuel system and vehicle components as potential candidates for this approach: fuel tank, including filler pipe; fuel pump(s); vehicle's electrical system; and engine fire retardant/extinguisher. We did not include fuel lines in the list because the potential to shut down the entire fuel delivery system when the fuel pump shuts down already exists.

B. System Performance (Phase 2)

While Phase 1 focused on shutting down fuel supply and potential ignition sources in a crash to help prevent or mitigate vehicle fires if a breach in the fuel system occurs, Phase 2 focused on preventing fuel system failures in the first instance. We explained that Phase 2 would focus on the process of upgrading crash test performance in frontal, side, and rear impacts. Phase 2's purpose was to identify tests that represent the crash conditions associated with fires that cause fatal and severe injury.

We explained that available information indicated that the present tests in Standard No. 301 may not be representative of the crash conditions associated with fatal and severe injury-causing fires. We also explained that further tests were needed to define specific upgrades to these crash conditions. We noted that offset/oblique tests in the frontal mode, use of the Standard No. 214 barrier in the rear test mode, and a pole impact or use of the Standard No. 214 barrier for the side impact test all appeared promising for possible inclusion in Standard No. 301.

We explained that a key objective for such tests may be to limit the engagement of the struck vehicle to a narrower area than is engaged using current barriers. We explained that we needed to define the specific crash conditions that cause fuel system loss of integrity and understand which crashes would be survivable if fire were avoided. We explained that we were considering performing crash data analyses and crash testing to further explore these issues. We requested comments on the performance aspects and practicability of this approach.

C. Environmental and Aging Effects (Phase 3)

We explained that the third phase would explore the issue of environmental and aging effects on vehicle condition and the possible relationship to fire occurrence. Our preliminary analyses of FARS and State crash files indicated that the likelihood of fire increases with the age of the vehicle. The analysis also attempted to determine the possible differences, if any, in the occurrence of fire in fatal crashes in states that typically experience more inclement weather (*i.e.,* snow and ice) and as a result, use more salt and other corrosive substances on public roadways, when compared to other states.

Passenger cars registered in the ''salt belt'' states and involved in fatal crashes were found to have an approximately 25 percent greater rate of fire occurrence in fatal crashes, compared with passenger cars in fatal crashes in the ''sun belt'' states. When the fire itself was deemed to be the most harmful event in the vehicle, however, the ''salt belt'' states had a lower rate compared to the ''sun belt'' states. Consequently, it was not clear whether the possible relationship between vehicle aging, weather and use of salt and similar substances and fire occurrence was due to environmental characteristics, to changes in vehicle design, to differences in operator characteristics, or a combination of these factors. We explained that if the disparity could be attributed to environmental factors, it might be possible to add environmental tests, such as a corrosion test, to Standard No. 301.

V. Public Comments on ANPRM

NHTSA received 40 comments on the April 1995 ANPRM. Of the comments, twenty were one-page form letters that supported the proposal and were signed by individuals affiliated with various businesses and organizations. The remaining 20 comments were submitted by: eight manufacturers (1 component manufacturer and 7 vehicle manufacturers), 6 associations, and 6 other organizations (2 separate

[5] For example, in some vehicles, sensors detect the consequence of severe engine damage (rotation stops for camshaft, crankshaft or alternator) and immediately shut off the fuel pump. Often, signals from more than one sensor are used to determine if the engine has stopped running and the decision for fuel pump shut-off is left up to the vehicle's onboard computer (such as the Engine Control Unit or Electronic Control Module).

[6] Inertia switches operate on sudden impact to open the electrical circuit to the fuel pump or the battery during the crash. An inertia switch can be designed to operate at various levels of impact intensity and direction, and, therefore, could be effective in all crash modes.

comments from a consulting firm, 1 state agency, 1 consumer advocacy organization, 1 research institute, and 1 individual). The comments are summarized below.

A. Comments on Component Performance

The First Inertia Switch Company (First Inertia) stated that it first introduced a crash activated fuel pump shut-off switch for the 1981 vehicle models in the U.S. First Inertia argued that an inertia switch is the most direct and effective means of shutting off the fuel pump in a crash. It estimated that during the 1995 model year, 9.5 million inertia switches would be installed in vehicles manufactured in the U.S., Canada, Europe, and Japan. First Inertia believes that its inertia switches can easily be designed for shutting off the electric power in a crash and performing other functions (e.g., unlocking vehicle doors).

While GM expressed interest in the potential benefits that could be derived from possible fuel system component upgrades, it suggested that we conduct careful studies to ensure that we selected proposed countermeasures that would not be ''counterproductive.'' Specifically, GM pointed out that the agency's crash data analysis of vehicle fires showed no statistically significant difference in the rate of crash related fuel leakage and/or fire between the GM vehicles that used an engine rotation sensing device for shutting off the fuel flow and the peer Ford vehicles that, in addition to the engine rotation sensing device, used inertia switches as a redundant fuel pump shut-off device.

GM opposed using a battery shut-off device to interrupt the vehicle's electric power. GM argued that the potential negative side effects (*e.g.*, potentially getting stranded on the road if the engine shuts off while driving) of a crash-activated electrical system shut-off preclude the incorporation of such a device. GM suggested conducting additional research on the nature and relative frequency of real-world crash fire ignition sources.

GM stated that it considered the concept of using fire extinguishers and fire retardant blankets for extinguishing engine compartment fires intriguing and supported doing a thorough evaluation to determine their feasibility. GM also stated that it planned to research means to reduce or delay engine fire propagation into the occupant compartment to help provide occupants with additional time to exit a vehicle and avoid burn injuries.

Volkswagen of America, Inc. (VW) was concerned with potential reliability problems associated with inertia-activated fuel cut-off switches. VW explained that it was using an engine rotation sensing device for cutting-off fuel flow in its vehicles. VW also stated that additional fuel tank filler valve systems were unnecessary. In addition, VW recommended that we refer to ECE Regulation No. 34 for possible component test requirements, but did not specify particular tests.

Mitsubishi Motors America, Inc. argued that the proposed Phase 1 approach could put undue emphasis on the performance of particular isolated components in resisting post-impact fires. Mitsubishi argued that such an approach could have unanticipated negative consequences on maximizing over-all fire resistance in real-world crashes.

Ford Motor Company (Ford) stated that fuel system integrity in a crash is a vehicle/system phenomenon in which the vehicle and its components work as a unit. Ford disagreed with the proposed Phase 1 approach of incorporating separate component tests into Standard No. 301. Ford stated that it uses redundant fuel shut-off devices (an engine speed sensing device and an inertia sensing device) to stop the flow of electric current to the fuel pump in certain conditions.

Chrysler Corporation (Chrysler) argued that fuel system integrity should be evaluated as a system and expressed its opposition to any initiative to introduce component design or performance requirements into Standard No. 301. Chrysler explained that it used a fuel shut-off device that senses engine rotation for stopping the fuel flow and stated that additional protection had not been shown to be any more effective in reducing fuel related fires. Chrysler stated that it was premature to consider using an electrical power shut-off device for reducing fuel induced fires. Chrysler argued that more research is needed to verify that the proposed mitigation approach will not harm other systems that are critical to occupant protection, during and after the crash event. Chrysler opposed the concept of using fire extinguishers and fire retardant systems for engine compartment fires and stated that the ignition of a vehicle fire does not necessarily occur at a predictable point in time during a vehicle crash. In addition, Chrysler stated that, in some fires, a ''second ignition'' is encountered that would not be mitigated by these proposed systems.

Volvo Cars of North America, Inc. (Volvo) stated that shutting off fuel flow quickly during and after a crash could help to reduce the risk of engine fires and the spread of fires once one had started. Volvo stated that since a number of methods could be employed to stop the flow of fuel, there should be no requirement mandating certain equipment. Volvo stated that we should give manufacturers the freedom to design their own systems by specifying performance criteria for them to meet. Volvo suggested that we incorporate the plastic fuel tank test requirements of ECE Reg. No. 34 into Standard No. 301.

Stilson Consulting submitted two sets of comments in favor of the proposed approach. Stilson suggested in its first set of comments (Stilson-1) that the upgrading effort concentrate on preventing fuel siphoning from fuel line and fuel tank failure due to undercarriage impact and requiring a fuel pump shut-off switch for all crash directions. Stilson-1 provided a draft amendment to Standard No. 301 for consideration. Stilson's second set of comments (Stilson-2) contained recommendations for examining vehicle components and testing fuel lines, fuel filler necks and caps, and inertia switches.

The Insurance Institute for Highway Safety (IIHS), Advocates for Highway and Auto Safety (Advocates), National Truck Equipment Association (NTEA), National Association of State Fire Marshals (NASFM), and North Carolina Department of Crime Control and Public Safety (North Carolina) supported the proposed approach. IIHS stated that we should move rapidly to incorporate component testing. IIHS argued that since the fuel flow shut-off technology is readily available, the agency should require manufacturers to demonstrate that their vehicles will automatically interrupt the fuel flow in a crash. IIHS also stated that the technology to interrupt the flow of electrical current was readily available and supported including in the Standard test requirements that assure that electrical sparks do not ignite spilled fuel in crashes. IIHS reiterated its suggestion that we specify additional requirements for nonmetallic fuel tanks.

B. Comments on System Performance

Chrysler, GM, Mitsubishi, Ford, and Volvo expressed general support for upgrading Standard No. 301's test procedures. GM, Ford, and Chrysler stated, however, that more research was needed before the test procedures for frontal and rear impacts were upgraded. The American Automobile Manufacturing Association (AAMA) also stated that additional research and analysis was needed for some of the proposed upgrades. Mitsubishi argued that we should look at the entire spectrum of real-world impact speeds

and modes and consider whether the proposed upgrades would yield negative side-effects on other aspects of overall crashworthiness. Volvo stated that Standard No. 301 should adopt the proposed ECE R94 tests using an offset crash condition with a fixed deformable impact barrier. IIHS and Advocates suggested using a deformable barrier for frontal and rear impact offset tests. VW opposed including any additional crash tests in the standard.

For side impact, GM, VW, Ford, Chrysler, AAMA, Advocates, and IIHS all supported replacing the current Standard No. 301 side impact test with the current Standard No. 214 dynamic test. GM, VW, Ford, Chrysler, and AAMA stated that the moving deformable barrier (MDB) used in Standard No. 214 is more realistic than the one currently used in Standard No. 301's lateral moving barrier crash test. They also argued that no new test development was needed because Standard No. 214's test was more stringent and more representative of real-world crash conditions than Standard No. 301's side impact test. Chrysler, GM and AAMA stated that no other side impact tests were justified for the upgrade and opposed including a side impact pole test in Standard No. 301. AAMA, GM and Chrysler all noted that a December 1994 NHTSA report indicates

> that the side collision fire rate for cars, light trucks, and vans is highest when a narrow object is struck. However, there are approximately two to eight times as many side collision fires (depending on vehicle type) when the object struck is another vehicle compared to a narrow object such as a pole. Thus, it would appear to be more effective in terms of vehicle side collision fire mitigation to concentrate on the vehicle-to-vehicle collision conditions in the standard.

They argued that Standard No. 214's test procedure would do this.

For rear impacts, GM supported efforts to develop a repeatable and objective rear impact test, using a realistic moving deformable barrier to replace the existing Standard No. 301 rear moving barrier test. However, GM cautioned that, because of the uniaxial nature and construction of the Standard No. 214 barrier, the representativeness of this barrier face in a primarily off-axis crush mode (*e.g.*, in an angled rear impact) had to be evaluated.

Three of the commenters, Stilson, IIHS, and Advocates, supported the system level approach to upgrade Standard No. 301. Stilson-1 argued that since automobile manufacturers were already conducting 80 km/h (50 mph) offset vehicle-to-vehicle impact tests for examining fuel systems, incorporating higher test speeds into Standard No. 301 would not pose an unreasonable burden on the automotive manufacturers. Stilson-2 reiterated the comments in Stilson-1 and stated that the minimum test requirements should be: 56 km/h (35 mph) frontal barrier (NCAP type) and 88 km/h (55 mph) vehicle-to-vehicle 50 percent offset impact tests, 48 km/h (30 mph) rear fixed barrier impact tests, and 88 km/h (55 mph) vehicle-to-vehicle side impact tests.

Advocates stated that all barrier tests at any crash angle should be conducted at least 56 km/h (35 mph). Advocates supported using a more aggressive test barrier design to simulate narrow objects. Advocates expressed support for replacing the current Standard No. 301 side impact test with the current Standard No. 214 dynamic test as a near term upgrade. Advocates also recommended using heavier barrier weights for testing LTVs than those used for cars. Advocates also stated that we should require fuel tanks on light passenger vehicles to be placed forward of the rear axle.

C. Comments on Environmental and Aging Effects

Ford, Mitsubishi and GM all said that additional research and analysis was needed to determine if an association between fire and environmental and/or aging factors exists. Chrysler argued that it was premature to suggest that environmental and aging factors degrade fuel system components and lead to an increase in vehicle fires. Chrysler, Ford and GM stated that manufacturers were already upgrading fuel and evaporative emission components to comply with the regulations of the Environmental Protection Agency (EPA) and the California Air Resources Board. These regulations require the vehicle's fuel system to comply with specified emission performance requirements for a specified period of time (ten years or 100,000 miles for cars and 11 years or 100,000 miles for trucks). The regulations also require manufacturers to install an on-board diagnostic system that detects evaporative emissions. Mitsubishi also stated that the agency needed to do more work to define possible performance tests and said that such tests would have to address issues such as how to ''age'' vehicles or vehicle parts. Advocates argued that we should adopt performance tests that ensure that fuel systems are designed and manufactured to maintain their integrity over the life of the vehicle.

VI. Agency's Response to Comments on ANPRM

A. NHTSA's Component Performance Activities

We examined the effectiveness of fuel pump shut-off devices in reducing post-crash vehicle fires, using the data in NHTSA's 1992 to 1996 NASS file. We compared post-crash fire occurrence in light vehicles with and without inertia activated fuel pump shut-off devices. According to estimates based on the NASS data, 1,552 Ford vehicles that had inertia switches were involved in post-crash fires. In addition, 2,020 GM and 1,008 Chrysler vehicles that did not have inertia switches were involved in post-crash fires. These crash fires accounted for 0.32 percent of all Ford towaway crashes during that period, as compared to 0.34 percent for GM, and 0.41 percent for Chrysler. The fires were classified as minor or major fires with the following results: Ford (0.23 percent minor, 0.09 percent major), GM (0.06 percent minor, 0.28 percent major), and Chrysler (0.35 percent minor, 0.06 percent major), respectively. It appears that Ford and Chrysler vehicles had more minor fires than the GM vehicles.

Based on the foregoing, we have decided not to pursue rulemaking with respect to fuel system component performance at this time. Our own review of NASS data did not reveal a significant difference in the rate or severity of post crash fire occurrence in vehicles with and vehicles without inertia activated fuel pump shut-off devices. GM crash test data support this conclusion. GM monitored the fuel pump circuitry in all of the crash tests that it conducted for its above-mentioned research. All of the crashes caused electrical circuitry shorting that disabled the fuel pump before the inertia switch could be activated.

B. NHTSA's System Performance Activities

In response to the comments and to follow-up on earlier activities, we decided to investigate the feasibility and practicability of upgrading Standard No. 301's current rear and side impact requirements. We reviewed real world crash data to determine what types of rear impact crashes result in ''moderate,'' ''severe,'' and ''very severe'' fires.[7] Next, we analyzed the data to determine whether it was the fire or the impact of the crash that caused

[7] A ''moderate'' fire is defined as fire damage to between 25 percent and 50 percent of the vehicle surface, a ''severe'' fire has fire damage to between 50 percent and 75 percent of the vehicle surface, and a ''very severe'' fire has fire damage to more than 75 percent of the vehicle surface.

the fatalities and injuries in the fire-related crashes. We then examined the data to determine the types of rear crashes that were causing fire-related fatalities and injuries and developed a new crash test procedure to simulate the most frequent crash scenario that leads to fire and fire-related fatalities and injuries in rear impact crashes. We then performed seventeen crash tests using the new crash test procedure. The following two sections summarize the results of the studies and crash tests.

1. Analyses of FARS and NASS Data on Fire-Related Rear Impact Crashes

In the April 1995 ANPRM, we discussed the results of a detailed NHTSA-sponsored research study of a sample of crash cases involving fire from NASS and FARS conducted by GESAC, Inc.[8] The GESAC study selected 150 NASS cases for detailed analysis. They were selected from recent years and involved fire that caused any occupant injury of AIS 2 or greater. One of the objectives of the analysis was to suggest a laboratory simulation for crashes that cause vehicle fires. The suggested crash simulations include impact mode, speed, barrier, location, and orientation.

For vehicles receiving rear damage, the report indicates that a moving deformable barrier with a partial overlap (a partial width of the vehicle involved in the crash) would simulate the most common type of fire-producing crash. The GESAC study also presented information on impact speed for crash simulations. For rear impacts, the delta-v ranged from 11 km/h to 73 km/h (7 to 45 mph) with a 42 km/h (26 mph) median delta-v. Overlap, which is defined as the percentage of the rear width engaged in a crash, ranged from 30 percent to 95 percent with an average level of 71 percent. The rear impact estimates were based on 11 cases in the 1979 to 1986 NASS data. Due to data limitations, we were unable to derive a more detailed and statistically significant delta-v versus occupant burn injury (e.g., 8 km/h (5 mph) delta-v intervals vs. different AIS levels of occupant injury). Therefore, we concluded that further study was needed.

A detailed case study of 214 fire-related fatal crashes was conducted to determine whether the death was caused by the fire or blunt trauma and to determine the specific crash conditions which caused the fire.[9] Fatality Analysis Reporting System (FARS) data for 1990, 1991, 1992, and 1993 were queried to obtain a listing of cases in which fire occurred. Cases were selected from seven states (Illinois, Florida, Colorado, Arizona, Ohio, Delaware, and West Virginia) because the crash records of these states include case history information. The crash records may have included all or part of the following: (1) Photographs which documented the crash site and the vehicle damage, (2) ''police accident reports'' (PARs) that described the crash based on the opinion and findings of the investigating officer, (3) witness statements, sometimes indicating the intensity, location, and timing of the fire, and (4) medical records that stated whether an autopsy was performed and the findings of the autopsy describing the cause of death, typically differentiating between conflagration and blunt trauma. Based on these data, NHTSA determined the cause of death. Generally, we gave priority to death certificates issued by a medical examiner. We also used witness statements in a few cases to determine the immediate post crash state of the burn victim. This study did not use the FARS' variable for most harmful event.

The 214 fire-related fatal crashes involved 251 vehicles and 293 total fatalities. The distribution of these 214 crashes was 58 percent (124) frontal impacts, 15 percent (33) side impacts, 10 percent (22) rollover crashes, 10 percent (22) rear impacts, and 6 percent (13) coded as other impact types. At the crash level, NHTSA's analysis found 21 percent of the crashes (45) resulted in one or more fatalities due to burn-related trauma. Of these 45 crashes, 16 were rear impacts.

At the occupant level, NHTSA's analysis found 22 percent of the 293 occupant fatalities (65) were due to burn-related trauma while the remaining 78 percent (228) were due to impact-related trauma. The subset consisting of the 65 burn-related trauma occupant fatalities was categorized by crash type. The resulting distribution shows that 46 percent (30) of the fatalities occurred from rear impacts, 23 percent (15) from front impacts, 15 percent (10) from side impacts, 11 percent (7) from rollover crashes, and 5 percent (3) were coded as other impact types.

Although the majority of crashes in which fire occurs are frontal crashes (58 percent), an analysis of fatalities due to burn-related trauma shows that rear impacts account for the majority (46 percent). Therefore, a fatal rear impact involving fire is more likely to result in a burn-related fatality than fire-related crashes in other modes.

Based on the methodology used in this analysis, we estimate that 309 burn-related trauma fatalities occurred in 1995 in the United States. Further, based on the distribution of burn-related trauma fatalities, about 143 (46 percent) of these would have occurred in rear impact crashes.

A thorough review of the crash conditions in the rear impact cases revealed a consistent crash and fire scenario. According to the study, ''[i]n all 16 rear impact cases the vehicle [was] struck in the rear causing loss of fuel from the tank area which ignites during impact and results in a rapidly spreading fire and resulting fatalities.'' The study concluded that striking a stationary vehicle at 50–55 mph with a moving deformable barrier (MDB) at a 70 percent overlap (width of vehicle engagement) would provide a reasonable crash simulation of real world rear impact fatal burn cases.

As discussed earlier in this notice, the April 1995 ANPRM described the results of a research study GESAC, Inc. conducted for NHTSA on 150 selected NASS cases for detailed analysis. One of the objectives of the analysis was to suggest a laboratory simulation for each crash that led to vehicle fire. For rear impacts, the GESAC study suggested using a moving deformable barrier with a partial overlap to simulate the most frequent crash scenario. The overlap ranged from 30 percent to 95 percent with an average level of 71 percent. The GESAC study accumulated a delta-v range from 11 to 72 km/h (7 to 45 mph) with a recommended 42 km/h (26 mph) delta-v, if the crash could be simulated by an equal mass vehicle-to-vehicle collision (i.e., where the weights of the two vehicles are equivalent).

According to 1991 to 1997 NASS–CDS estimates of occupant injuries vs. delta-v, there were no occupant *burn* injuries when the delta-v was lower than 32 km/h (20 mph) in light passenger vehicles involved with fire and in nonrollover rear-impact towaway crashes. The NASS–CDS estimates also show that the majority of fatal and nonfatal occupant burn injuries were crashes with a 34 to 48 km/h (21 to 30 mph) delta-v range. For those occupants that suffered both burn and impact injuries, NASS–CDS does not specify whether the most severe occupant injury (MAIS) listed in NASS–CDS is due to burn or impact.

[8] ''Fuel System Integrity Upgrade—NASS & FARS Case Study,'' DOT Contract No. DTNH–22–92–D–07064, March 1994.

[9] The study is summarized in the paper, ''A Case Study of 214 Fatal Crashes Involving Fire,'' by Carl Ragland and Hsi-Sheng Hsia, Paper No. 98–S4–O–08, The Sixteenth International Technical Conference on the Enhanced Safety of Vehicles, Windsor, Canada, June 1998.

Crash data analyses revealed a consistent crash scenario that causes fire and fire-related fatalities and injuries that can be simulated with the following test procedure: a moving deformable barrier (MDB) of 1,368 kg (3,015 pounds) impacting the rear of the test vehicle at 80 km/h (50 mph) with a 70 percent overlap of the vehicle. The 1,368 kg (3,015 lb) moving deformable barrier is the same barrier used for Standard No. 214, except that the barrier's face is situated two inches lower than the face of the Standard No. 214 barrier to simulate pre-crash braking in rear impact crashes.

The lowering of the face of the barrier by 2 inches is consistent with the results of panic braking tests that were performed by the agency as part of its underride research. It is also supported by annualized estimates from NASS–CDS 1995 to 1999 data regarding the frequency of braking by the drivers of striking vehicles in rear impact crashes involving two light vehicles. Based on those data, we estimate that 72% of drivers of striking vehicles involved in those crashes applied the brakes. Based on the same data, we estimate that 36% of drivers applied the brakes in frontal and 54% in side impact crashes, respectively.

According to the October 30, 1990 final rule that adopted the Standard No. 214 barrier, the barrier is intended to simulate a 2,700 pound vehicle containing 300 pounds of passengers or cargo, which we estimated would be the average weight of the striking vehicle in crashes.[10] Using the Standard No. 214 barrier as the rear impact striking device on a range of small, mid-size, and large vehicles [11] at 80 km/h (50 mph) produces a delta-v range of about 32 to 48 km/h (20 to 30 mph). That is the range in which the majority of fatal and nonfatal occupant burn injuries are occurring, according to NASS–CDS estimates.[12]

2. Offset Rear Impact Vehicle Crash Tests

We conducted several series of vehicle crash tests to determine the feasibility and practicability of the offset rear impact test procedure for the types of vehicles to which it would apply.[13] All of the tests used a 1,368 kg (3,015 pounds) MDB with the barrier lowered by 50 mm (2 inches) to simulate pre-crash breaking. The MDB impacted the test vehicle at 80 km/h (50 mph) (parallel to the longitudinal centerline of the tested vehicle) with a 70 percent overlap on the side of the vehicle where the fuel filler neck is located. This test condition approximates the findings of both the GESAC study and the FARS case study with respect to delta-v and vehicle-to-barrier overlap. Once the tests were performed, we looked to see whether the vehicles met the fuel leakage requirements of Standard No. 301. A discussion of the test results follows.[14]

Between February and April 1996 at the Transportation Research Center of Ohio (TRC), we conducted six rear impact tests on 1996 model vehicles using the offset rear impact test procedure. The vehicles tested included a Suzuki Sidekick, Dodge Neon, Geo Prizm, Ford Mustang, Plymouth Voyager, and Chevrolet Blazer. The Suzuki Sidekick, Dodge Neon, and Geo Prizm all leaked fuel in excess of Standard No. 301's requirements.[15] The Ford Mustang,[16] Plymouth Voyager, and Chevrolet Blazer all passed the fuel leakage requirements.[17]

In light of the failure of the smaller vehicles to pass the test, we decided to perform additional crash tests on small compact and light-passenger vehicles to assess the practicability and repeatability of the offset rear impact test procedure with respect to small vehicles.

GM, in cooperation with the agency, conducted five rear impact crash tests between December 1997 and January 1998. The five GM tests were funded by the GM C/K pickup truck settlement research fund. All of the five tested vehicles, a Honda Civic, Chevrolet Cavalier, Nissan Sentra, VW Jetta, and Ford Escort, were 1998 models. The vehicles' test weights ranged from 1,344 to 1,468 kg (2,962 to 3,236 pounds). The Honda Civic and the Nissan Sentra passed Standard No. 301's fuel leakage requirements. The Chevrolet Cavalier, Ford Escort, and VW Jetta all leaked fuel in excess of Standard No. 301's requirements.

We also conducted two additional tests on two mini-cars, a 1998 Chevrolet Metro and a 1999 Mazda Miata, through Veridian (formerly Calspan Corp.). The Metro weighed 996.5 kg (2,196 pounds) and the Miata weighed 1,225.5 kg (2,701 pounds). Both of the vehicles passed the fuel leakage requirements, demonstrating the feasibility of the smallest cars passing the proposed rear impact test procedure.

To assess the repeatability of the offset rear impact test procedure, we conducted additional tests of previously tested vehicles. We decided to retest the Honda Civic, which had passed the test, and the Chevrolet Cavalier, which had failed the test. Between September and October 1998, the agency conducted these two tests through TRC. The Honda Civic passed the TRC test and repeated the results of the GM test. The Chevrolet Cavalier, which failed the GM test, also passed the TRC test and, therefore, did not repeat the results of the GM test.

An examination of the TRC test results revealed that the damage patterns of the TRC tests were nearly identical to the damage pattern of the GM tests, but that the extent of the damage was less. The impact velocity of the TRC test was 1 km/h lower than the GM test. This difference, however, would not account for the difference in crush. Further examination revealed a defective honeycomb barrier assembly. The barrier's honeycomb bumper assembly delaminated during the TRC crash test, which led to more honeycomb crush and less vehicle crush.[18] Because of the consistent crush pattern to both of the vehicles and the MDBs in the two tests of the Cavalier, we decided not to retest the Chevrolet Cavalier at TRC if we obtained a

[10] The barrier was built to behave like a vehicle in a real-world crash. Unlike the flat faced barrier currently used in Standard No. 301's rear impact crash test, the moving deformable barrier absorbs some of the crash energy and distributes crash forces in the striking vehicle in the same way a vehicle would in a real crash. While there is less crush and deformation to the struck vehicle with the MDB, the deformation is uneven and more realistic than the flat, even deformation caused by the current flat-faced barrier.

[11] Vehicles in the range of 907 to 2,041 kg (2,000 to 4,500 pounds).

[12] The delta-v of an 80 km/h (50 mph) impact between a 1,368 kg (3,015 pounds) moving barrier and a 1,368 kg (3,015 pounds) test vehicle is half of the impact speed, specifically, 40 km/h (25 mph). The same test conducted with a lighter test vehicle would yield a higher delta-v; a crash into a heavier vehicle would yield a lower delta-v.

[13] The test results are available in the docket for this rulemaking.

[14] Fully instrumented Hybrid III dummies were placed in the driver and right front passenger seating positions during the crash tests. The dummy measurements are available in the docket of this rulemaking.

[15] The test weights of the three failed vehicles were 1,370, 1,360, and 1,326 kg (3,020, 2,997, and 2,923 lb), respectively.

[16] Between July and November 1995, NHTSA conducted three more rear impact crash tests on 1993 Ford Mustangs through the Transportation Research Center of Ohio (TRC). The tests used the MDB at 80.3, 79.6, and 80.1 km/h (49.9, 49.5, and 49.8 mph) impact speeds and with 88 percent, 80 percent, and 50 percent overlaps, respectively. Only the second of the three tested vehicles passed the Standard No. 301 fuel leakage requirements.

[17] The test weights of the three passed vehicles were 1,628, 1,946, and 1,906 kg (3,588, 4,289, and 4,201 lb), respectively.

[18] Further investigation revealed that the honeycomb supplier had changed the procedure in manufacturing the assembly. The change in assembly procedure reduced the bonding strength of the epoxy. The honeycomb supplier subsequently replaced all untested honeycomb faces.

repeatable outcome in the Veridian testing.

In November 1998, we conducted two additional tests of the Honda Civic and Chevrolet Cavalier through Veridian. The Honda Civic passed and the Chevrolet Cavalier failed the Veridian test. Both the Cavalier and the Civic repeated the results of the GM tests.

3. Analysis of Side Impact Test Procedure

Since 1994, a small number of vehicles have exceeded the limits on fuel leakage in Standard No. 301 in Standard No. 301 lateral and Standard No. 214 compliance tests (one out of more than 100 vehicles in Standard No. 214 compliance tests and one out of 43 in Standard No. 301 compliance tests). In addition, in 1997, the agency's New Car Assessment Program (NCAP) began conducting NCAP side impact tests at a higher impact speed. To date, two out of 76 of the NCAP tested vehicles leaked fuel in excess of Standard No. 301's fuel leakage requirements.

We compared the crash test results of a Standard No. 301 lateral impact compliance test and a Standard No. 214 compliance test for the same vehicle model. According to our analysis, the Standard No. 214 crash test exposes the subject vehicle to higher crush energy and higher crash forces, and to greater changes in velocity than the existing Standard No. 301 test. The data show that the fuel system components are exposed to more stringent forces in the Standard No. 214 test than in the present Standard No. 301 lateral test.

C. Environmental and Aging Effects

At this time, we have decided not to pursue rulemaking related to environmental and aging effects. While we agree with Advocates that preserving fuel system integrity over the life of a vehicle is important, we also agree with the comments of Mitsubishi, GM and Ford that further studies are needed to define the problems associated with environmental and aging effects and determine whether rulemaking would be appropriate to address them.

GM has conducted research on environmental factors and aging effects on fuel system integrity as part of the GM Settlement Agreement and has prepared a report on its findings. A review of this findings, based on a limited number of vehicles from the ''salt belt'' regions, indicates some significant degradation of metal components including fuel tanks. Additionally, a significant degradation of rubber components from the ''sun belt'' regions was observed. There was little degradation of plastic fuel tanks or lines in either region. Upon further study, we may revisit this issue in the future.

As stated in the 1995 ANPRM, the number of cases in the data base is insufficient to produce statistically significant results using vehicle age as a variable. Further studies are needed to relate degradation of components to fire-related occupant injuries. The agency seeks comments on the magnitude of the problem and the need for future rulemaking action. The agency also seeks comments on what procedure and requirements are appropriate to be used in testing for problems associated with older vehicles.

D. Comparison of U.S. and Foreign Fuel System Safety Requirements

The following discussion summarizes the results of our comparison of Standard No. 301's requirements with the following foreign fuel system integrity standards:

(1) The Canadian CMVSS No. 301, *Fuel System Integrity (Gasoline, Diesel);* [19]

(2) The Economic Commission for Europe (ECE) Regulation No. 34, *Uniform Provisions Concerning the Approval of Vehicles with Regard to the Prevention of Fire Risks* (01 Series, Amendment 1, January 29, 1979) (Thirteen European countries have agreed to adopt ECE Reg. No. 34, including Germany, France, Italy, Netherlands, Sweden, Belgium, Czechoslovakia, United Kingdom, Luxembourg, Norway, Finland, Denmark, and Romania); and

(3) The Japanese Standard, *Technical Standard for Fuel Leakage in Collision, etc.* (Amended on August 1, 1989).

In terms of the vehicles covered: Standard No. 301 applies to all vehicles 4,536 kg (10,000 pounds) or less GVWR and school buses over 4,536 kg (10,000 pounds) GVWR. ECE Reg. No. 34 only applies to passenger cars, and the Japanese standard applies to passenger cars and multipurpose passenger vehicles 2,540 kg (5,600 pounds) or less.

In terms of required impact tests: As described above, Standard No. 301 requires frontal, rear and side impact tests at 48, 48 and 32 km/h (30, 30, and 20 mph), respectively, plus a static rollover test, for vehicles 4,536 kg (10,000 pounds) or less GVWR. Standard No. 301 also requires a 48 km/h (30 mph) impact test for school buses over 10,000 pounds (4,536 kg) GVWR.

The ECE Reg. No. 34 requires a 48 to 53 km/h (30 to 33 mph) frontal fixed barrier impact test and a 35 to 38 km/h (22 to 24 mph) rear moving flat rigid barrier impact test. The ECE test device weighs 1,100±20 kg (2,425±44 pounds). A pendulum can be used as the impactor. ECE Reg. No. 34 does not require a rollover test. The standard requires a hydraulic internal-pressure test for all fuel tanks and special tests (impact resistance, mechanical strength, and fire resistance) for plastic fuel tanks.

The Japanese standard requires a 50±2 km/h (31±1 mph) frontal fixed barrier impact test and a 35 to 38 km/h (22 to 24 mph) rear moving flat barrier impact test. The flat rigid barrier weighs 1,100±20 kg (2,425±44 pounds). A pendulum can be used as the impactor.

In terms of test performance requirements: all three standards limit fuel spillage. As in Standard No. 301, the ECE Reg. No. 34 and the Japanese standard, in general, also limit fuel spillage to about 28 grams/min (1 ounce/min). The Japanese standard lists the ECE Reg. No. 34 and Standard No. 301 as equivalent standards.

In summary, Standard No. 301 applies to more vehicle classes and to higher vehicle weights than the ECE Reg. No. 34 or the Japanese standard. Standard No. 301 requires testing in all crash modes (frontal, side, rear, and rollover). ECE Reg. No. 34 and the Japanese standard require only frontal and rear impact tests. Standard No. 301 uses a much heavier moving barrier for impact tests than the ECE and Japanese standards (1,814 kg vs. 1,100 kg). However, Standard No. 301 does not specify a hydraulic pressure test for fuel tanks, a battery retention requirement, or additional tests for plastic fuel tanks; ECE Reg. No. 34 does. In addition, the ECE Reg. No. 34 requires that ''no fire maintained by the fuel shall occur'' and does not allow failure of the battery securing device due to the impact. ECE Reg. No. 34 also requires filling the impacted vehicle's fuel tank ''either with fuel or with a non-inflammable liquid.'' We understand that, in practice, when the ECE Reg. No. 34 tests are conducted, the fuel tank is filled with non-inflammable liquid. Therefore, compliance with the no-fire requirement is based on a judgment about whether a fire would occur given the amount of observed fuel leakage.

VII. Proposal to Upgrade Standard No. 301's Rear and Lateral Impact Test Procedures

A. Proposed Offset Rear Impact Test Procedure

Based on our analysis of real-world fire-related fatal crash data and the results of various vehicle offset crash tests, we are proposing to replace

[19] This Standard is identical to NHTSA's Standard No. 301.

Standard No. 301's current rear impact test procedure with one that specifies striking the rear of the test vehicle at 80 km/h (50 mph) ± 1 km/h with a 1,368 kg (3,015 lb) MDB at a 70 percent overlap with the test vehicle. The MDB face would be located 50 mm (2 inches) lower than the face of the Standard No. 214 barrier to simulate pre-crash braking. We have tentatively concluded that this more stringent test procedure would reduce fire-related deaths and injuries from rear impact crashes.

The greatest number of fatalities due to fire occur in rear impacts. The proposed test procedure simulates a type of rear vehicle-to-vehicle collision that can result in post-crash fire in an otherwise survivable crash: a high speed offset rear strike to the vehicle that results in fuel leakage from a breach in the fuel system; the fuel can ignite during or following impact and lead to a rapidly spreading fire which results in fatalities and injuries. NASS estimates show that the majority of fatal and nonfatal occupant burn injuries in rear impact crashes were in the 34 to 48 km/h (21 to 30 mph) delta-v range. The proposed test procedure simulates the vehicle-to-vehicle crashes that result in delta-v's of 32 to 48 km/h (20 to 30 mph).

We have tentatively concluded that replacing the current Standard No. 301 rear impact test procedure with the proposed upgraded test procedure is practicable. Crash test results indicate that large, medium and small vehicles could be designed to meet the standard under the proposed upgraded rear impact procedure. In those tests, some small as well as large existing light-duty vehicles already meet the proposed upgrade. Several larger light-duty vehicles, including passenger cars, multipurpose passenger vehicles, and light trucks, all passed the proposed upgrade. In addition, several small vehicles, the Mazda Miata, Chevrolet Metro, Nissan Sentra, and Honda Civic, passed the proposed upgrade. While we are aware that some existing smaller vehicles leaked fuel when tested under the proposed upgraded test procedure (*e.g.,* the 1996 Suzuki Sidekick, Dodge Neon, Geo Prizm, and the 1998 Chevrolet Cavalier, VW Jetta, and Ford Escort), we believe that relatively minor, inexpensive design changes would correct the vast majority of the failures.[20] For example, the fuel lines in the Dodge Neon could be rerouted and the area on top of the tank around the fuel sender unit plastic sealing plate could be reinforced on the VW Jetta.

We are not proposing to require manufacturers to place each vehicle's fuel tank forward of the rear axle as suggested by Advocates. We believe such a requirement is unnecessary and would be design restrictive. We note that the fuel tank of the 1996 Ford Mustang, which passed the proposed rear impact test requirement, is located behind the rear axle. We believe that this test demonstrates that structural and component design is a more critical factor than fuel tank location in maintaining fuel system integrity.

We are also not proposing to use a heavier barrier for light trucks and sport utility vehicles, as suggested by Advocates. As noted above, in a 80 km/h (50 mph) rear impact offset crash test, a 1,368 kg (3,015 lb) MDB effectively reproduces the damage profile seen in real world crashes that can lead to fires. If a heavier barrier were used, the proposed rear impact crash test would no longer reproduce that profile.[21]

As to the comments concerning other aspects of crashworthiness, NHTSA plans to upgrade Standard No. 202, ''Head restraints,'' and is considering the possibility of upgrading Standard No. 207, ''Seating systems.''

B. Proposed Side Impact Test Procedure

Commenters on the ANPRM supported replacing Standard No. 301's current lateral crash test with Standard No. 214's side impact crash test, stating that the latter test would impose requirements that are more stringent for evaluating fuel system integrity than the current lateral crash test requirements in Standard No. 301. Manufacturers, safety advocates, and others agreed that this replacement would be beneficial from both a safety and cost perspective. In addition, in November 1992, Volkswagen of America, Inc. (VW) petitioned the agency to replace Standard No. 301's lateral crash test with Standard No. 214's dynamic test. We granted that petition very shortly after it was received.

We are proposing to replace Standard No. 301's current lateral crash test with the side impact crash test of Standard No. 214. Test analyses show that that Standard No. 214 crash test exposes the subject vehicle to higher crush energy and crash forces, and to greater changes in velocity than the existing Standard No. 301 lateral test. The data show that the fuel system components are often exposed to greater forces in the Standard No. 214 test.

Replacing the current Standard No. 301 lateral test with the Standard No. 214 test would both increase safety and reduce certification testing costs for manufacturers. These costs would be reduced because manufacturers would only have to conduct one type of side impact test instead of two.

In proposing to adopt the Standard No. 214 test, we are also proposing a slight change to that test, both as it appears in Standard No. 214, and as it would appear in Standard No. 301. Instead of specifying that the test would be conducted ''at'' 54 km/h (33.5 mph), we are proposing to specify that the test would be conducted at 53 km/h + 1.0 km/h. This is very close to the speed (52.9+0.8 km/h) at which our Office of Vehicle Safety Compliance has been conducting Standard No. 214 tests. In addition to proposing this change to Standard No. 214, we are also deleting several paragraphs of outdated requirements relating solely to vehicles manufactured in the mid-1990s.

C. Additional Considerations

1. Door System Integrity

As discussed previously, NASS data from 1991 to 1998 indicate that potential escape from the fire was made more difficult for most occupants (87 percent for all impacts) with moderate or more serious burns because they (1) were sitting next to a door that was jammed shut by crash forces, (2) did not have a door at their position, or (3) had a part of their body physically restrained by deformed vehicle structure. Real-world crash reports indicate that there were instances in which fire suddenly started several minutes after the vehicle was impacted. Thus, it is critical that occupants are able to quickly and easily exit the vehicle after a crash that could lead to a fire.

We examined the results of the vehicle crash tests we conducted using the offset rear impact test procedure to determine whether the front and rear doors were operable. The driver and passenger side doors in the Ford Mustang, Plymouth Voyager, Chevrolet Blazer, Geo Prizm, Chevrolet Metro and

[20] The Ford Mustang test series demonstrated the technical feasibility of redesigning a failed 1993 Ford Mustang so that it would pass the proposed upgrade test procedure (the 1996 Ford Mustang test). It demonstrated that structural and component design are critical, regardless of the fuel tank location, for passing the proposed upgrade.

[21] In a recent notice regarding Standard No. 214, NHTSA stated:

While the current moving deformable barrier used in Standard 214's dynamic test may be too small and too light to represent the future U.S. fleet, the barrier used in EU 96/27/EC is even smaller in size and mass. Instead of adopting the smaller ECE barrier, NHTSA plans to consider adopting a more representative barrier than the current barrier used in Standard 214.

We note that further research and development would have to be done before a heavier MDB could be developed and proposed for use in any test procedure.

the Veridian-tested Honda Civic were all easy to open after the test. The driver side door in the Veridian-tested Chevrolet Cavalier was operable while the passenger side door was not. In the TRC-tested Honda Civic, the driver side door was easy to open; the passenger side door required tools. Tools were needed to open both the driver and passenger side door in the TRC-tested Chevrolet Cavalier. The driver and passenger side doors in the Mazda Miata were reported closed/inoperable. Information was not available on the GM tests of the Honda Civic, Chevrolet Cavalier, Nissan Sentra, VW Jetta, and the Ford Escort. Several of the vehicles had at least one door that was ''easy'' to open or ''operable.'' Several, however, had doors that were inoperable or required tools to open.

In light of these data, we are considering adding a door opening test requirement to Standard No. 206. The purpose of this requirement would be to reduce the risk of injury in the event that a crash results in a fire. The requirement would accomplish this by increasing the chance that vehicle occupants can exit or be extricated from the vehicle after a crash. We request comment on whether such a requirement is necessary and, if so, what type of requirements would be appropriate, objective, and repeatable. Do any manufacturers currently perform post-crash door opening/egress capability tests? If so, how much force is applied to the door? How is the force applied? The ECE's frontal offset crash test requirement (ECE Regulation No. 94, S5.2.5.1, Amendment 2, September 18, 1998) requires that at least one door per row be openable after that frontal crash. Should we include a similar requirement in Standard No. 206 for the Standard No. 301 rear impact crash test? Should we go further and require openability after each type of crash specified in Standard No. 301?

2. Lead Time

The agency proposes a lead time of approximately three years for the rear impact test requirements. This proposal is based on the following analysis:

- All vehicles must be tested with the new requirements, which specifies a higher speed than the one currently used by most manufacturers in their testing. Thus, essentially all make/models that a manufacturer intends to sell after the effective date of these requirements would have to be tested to determine compliance. NHTSA estimates such testing will take at least five months.
- For all vehicles that did not currently comply (6 of 13 vehicles tested failed at least one test), a remedy must be determined, a prototype solution fabricated and incorporated in the vehicle, and the vehicle retested. With potential iterations, this process could take ten months. The design changes we believe are necessary for the vehicles we have tested have been moderate, not requiring retooling.
- Finally, the changes must be implemented on the production line. This is about a 12 month process.

These three factors indicate that a lead time of about 27 months is reasonably necessary. However, if retooling is necessary for some vehicles (we tested 13 make/models), at least an additional 6 months must be added to the process, making the total 33 months. Thus, as noted above, we propose a lead time of approximately three years for the rear impact test requirements. These estimates are based on a study conducted for NHTSA by Ludtke & Associates and documented in a report titled ''FMVSS 301 Fuel System Integrity Rear Impact Test Upgrade: Cost, Weight and Lead Time Analysis,'' dated September 21, 1999. This report is available in the docket for this rulemaking.

As to the new side impact test requirements, few, if any, design changes would be necessary. However, manufacturers would need to certify compliance using the new procedure. Therefore, we propose to put the side impact test requirements into effect on the first September 1st that occurs at least 12 months after the issuance of the final rule.

Between the issuance of the final rule and the effective date of the upgraded Standard, the manufacturers would be allowed the option of certifying to the Standard No. 301 rear and/or side impact requirements based either on the current test procedure or the new procedure. However, consistent with our other recent amendments adding options to our safety standards, a manufacturer would have to select irrevocably a particular option when it certifies the vehicle.

3. Request for Comments on Particular Issues

In addition to the matters discussed above, we seek responses to the following questions:

a. Are there any real-world data, other than the data that the agency has already analyzed for this proposed upgrade, that may better describe the relationship between the risk of occupant injury due to fire and crash severity?

b. Vehicle manufacturers.

i. How many of your vehicle models would need some redesign to comply with the proposed offset rear impact test procedure? Describe the type and extent of design changes. What costs would be associated with those redesigns? Would you have any significant problems completing necessary redesigns within the three-year lead time? If so, please identify those problems and indicate how much lead time would you need.

ii. How many of your vehicle models would need some redesign to comply with the proposed side impact test procedure? Describe the type and extent of design changes. What costs would be associated with those redesigns? Please indicate how much lead time you would need and why.

c. What impact would the proposed changes have on vehicle safety?

d. Are the proposals sufficient and appropriate for the different sizes and types of vehicles?

e. In the various crash tests that were performed during the research for this rulemaking, the values of head and neck injury criteria measured by the responses of the two front Hybrid III anthropomorphic test devices were much higher than acceptable thresholds. Direct contact of the head of the dummy with the interior of the vehicle compartment, which occurred when the front seat rotated backward excessively due to the rear impact, contributed to these high values. These high values raise concerns about head and neck protection of the occupants. The rear impact testing also raised concerns are also raised about the seat back strength as most seat backs collapsed in those tests. What do the high HIC values and neck loadings registered by the test dummies in those tests indicate about the real world potential for trauma injury to vehicle occupants in rear impacts? Could future vehicles be designed to provide both the improved fuel system integrity necessary to meet the more stringent requirements proposed in this NPRM and, at the same time, provide improved occupant protection in such impacts?

f. How do seat back failures influence the injury potential in rear impacts? Please provide data and other information that would aid the agency in determining the need for improving seat back strength and the appropriate requirements for doing so.

g. Should we require vehicles to retain fuel system integrity in tests with 5th percentile female dummies, as well as with 50th percentile male dummies, as is currently required?

h. We are proposing to eliminate the second sentence in S7.1.6(b) from Standard No. 301. That sentence reads:

''If the weight on any axle, when the vehicle is loaded to unloaded vehicle weight plus dummy weight, exceeds the axle's proportional share of the test weight, the remaining weight shall be placed so that the weight on that axle remains the same.'' Given the specifications in S7.1.6(a) concerning the placement of rated cargo and luggage capacity weight in the luggage area and the placement of dummies, is the second sentence in S7.1.6(b) needed for conducting Standard No. 301 compliance tests?

i. For the rear offset moving deformable barrier test conditions, we are proposing that the barrier be the same as the one shown in Figure 2 of Standard No. 214, 49 CFR 571.214 and specified in 49 CFR part 587, with one exception. The exception is that the face of the barrier would be positioned in the rear impact test so that it is 50 mm (2 inches) lower than the barrier face height specified in the current Standard No. 214, Figure 2. Positioning the barrier face in that manner might make it necessary for us to change slightly the center of gravity and moment of inertia specifications in paragraphs 587.6(d) and (e) of Part 587 of Title 49 CFR for the purposes of testing under Standard No. 301. The agency is in the process of determining the necessary changes to the specifications and plans to docket its findings during the comment period on this notice. Comments are requested on any necessary changes.

j. With respect to side impact crashes that result in fires, this proposal to upgrade Standard No. 301 addresses vehicle-to-vehicle crashes. As noted above, there are approximately two to eight times as many side collision fires (depending on vehicle type) when the object struck is another vehicle compared to a narrow object such as a pole. However, as also noted above, the side collision fire rate for cars, light trucks, and vans is highest when a narrow object is struck. Would it therefore be reasonable to consider a pole side impact test as part of a subsequent upgrading of the Standard?

k. Should the agency amend FMVSS No. 301 to prohibit fuel leakage in any crash test under FMVSS No. 208?

VIII. Rulemaking Analyses

A. Executive Order 12866 and DOT Regulatory Policies and Procedures

NHTSA has considered the impact of this final rule under E.O. 12866 and the Department of Transportation's regulatory policies and procedures. This rule was not reviewed under E.O. 12866, ''Regulatory Planning and Review'' and is not considered significant under the Department of Transportation's regulatory policies and procedures.

The agency has prepared a Preliminary Regulatory Evaluation (PRE) describing the economic and other effects of this proposal. The average cost for vehicles that would need to be modified to meet the proposed rear seat requirements is $5 per vehicle. Based on our estimate that 46 percent of the fleet does not currently meet the proposal and on an estimated 15.2 million total sales, we estimate that the total cost for the fleet would be $35 million annually.

The target population of crashes includes multi-vehicle crashes in which a passenger vehicle is struck in the rear by another passenger vehicle and the fire starts in the struck vehicle. There are an estimated 57 fatalities and 119 non-fatal injuries annually in the target population. The non-fatal burn injuries in that population of crashes were mostly minor and were typically not the most severe injury to the occupant. Our estimate of benefits ranges from 8 to 21 lives saved annually, once all vehicles on the road meet the proposed rear impact test.

While we believe the FMVSS 214 side impact test is somewhat stricter than the existing side impact test in FMVSS 301, we could not quantify any benefits in side impacts. There are less than 100 fatalities annually in multi-vehicle side impacts resulting in fire. More important, only one out of more than 100 vehicles tested failed the proposed fuel leakage requirements using the FMVSS 214 proposed test. Based on those test results, it appears that few vehicles would have to be modified to meet the proposed side impact test.

B. Regulatory Flexibility Act

NHTSA has also considered the effects of this proposed rule under the Regulatory Flexibility Act. I hereby certify that it would not have a significant economic impact on a substantial number of small entities. Further, the amendments primarily affect passenger car and light truck manufacturers which are not small entities under 5 U.S.C. 605(b). The Small Business Administration's regulations at 13 CFR part 121 define a small business, in part, as a business entity ''which operates primarily within the United States.'' (13 CFR 121.105(a)). The agency estimates that there are at most five small final stage manufacturers of passenger cars in the U.S. and no small manufacturers of light trucks, producing a combined total of at most 500 cars each year. It is unknown how many of their vehicle models currently meet the proposed requirements. Comments are requested on the impact of this proposal on small vehicle manufacturers.

There are a large number of second-stage manufacturers that could be affected by this proposal. Second-stage manufacturers buy a chassis from a first-stage manufacturer and finish it to the consumer's specifications. The manufacturers that put a work-related body on a pickup truck chassis (like a small tow truck) often perform manufacturing operations affecting the fuel system, both in the structure around the fuel tank and where the fuel filler neck attaches to the body. Other second-stage manufacturers use a van chassis or an incomplete vehicle for ambulances, small mobile homes, small school buses, etc. Typically, the first-stage manufacturer provides the second-stage manufacturer with a body builder's guide which tells the second-stage manufacturer what it can do and still either pass along the original equipment manufacturer's certification for compliance with Standard No. 301 (for chassis cabs) or otherwise be confident that the vehicle will comply (for other types of incomplete vehicles). To the extent that a second-stage manufacturer deviates from the guide, it would have to certify compliance on their own. The agency tentatively concludes that few final stage manufacturers would do so and that therefore this would not result in a significant economic impact on these companies. Comments are requested on this tentative conclusion.

C. National Environmental Policy Act

NHTSA has analyzed this rulemaking action for the purposes of the National Environmental Policy Act. The agency has concluded that implementation of this action would not have any significant impact on the quality of the human environment.

D. Executive Order 13132 (Federalism)

The agency has analyzed this rulemaking in accordance with the principles and criteria contained in Executive Order 13132 and has determined that it does not have sufficient federalism implications to warrant consultation with State and local officials or the preparation of a federalism summary impact statement. The proposal would not have any substantial effects on the States, or on the current Federal-State relationship, or on the current distribution of power and responsibilities among the various local officials.

E. Unfunded Mandates Act

The Unfunded Mandates Reform Act of 1995 requires agencies to prepare a written assessment of the costs, benefits and other effects of proposed or final rules that include a Federal mandate likely to result in the expenditure by State, local or tribal governments, in the aggregate, or by the private sector, of more than $100 million annually (adjusted for inflation with base year of 1995). As indicated above, NHTSA anticipates that this proposed rule would not result in an annual expenditure of $100 million.

F. Civil Justice Reform

These amendments would not have any retroactive effect. Under 49 U.S.C. 30103, whenever a Federal motor vehicle safety standard is in effect, a State may not adopt or maintain a safety standard applicable to the same aspect of performance which is not identical to the Federal standard, except to the extent that the state requirement imposes a higher level of performance and applies only to vehicles procured for the State's use. 49 U.S.C. 30161 sets forth a procedure for judicial review of final rules establishing, amending or revoking Federal motor vehicle safety standards. That section does not require submission of a petition for reconsideration or other administrative proceedings before parties may file suit in court.

G. National Technology Transfer and Advancement Act

Under the National Technology Transfer and Advancement Act of 1995 (NTTAA) (Public Law 104–113), ''all Federal agencies and departments shall use technical standards that are developed or adopted by voluntary consensus standards bodies, using such technical standards as a means to carry out policy objectives or activities determined by the agencies and departments.'' We surveyed several voluntary standards organizations to see whether there were any voluntary standards that were applicable to this rulemaking. Standard No. 301's current rear and lateral moving barrier crash test requirements are the same as the Society of Automotive Engineer's (SAE) Standard for rear and side barrier collision tests, SAE, J972. Today's notice proposes to amend Standard No. 301's current rear and lateral moving barrier crash test requirements. The American National Standards Institute (ANSI) and the International Standards Organization (ISO) do not have any automobile fire protection standards relevant to this rulemaking. We seek comment on whether there are any other voluntary standards that may be applicable to this rulemaking.

H. Paperwork Reduction Act

This rule does not contain any collection of information requirements requiring review under the Paperwork Reduction Act of 1995 (Public Law 104–13).

I. Plain Language

Executive Order 12866 and the President's memorandum of June 1, 1998, require each agency to write all rules in plain language. Application of the principles of plain language includes consideration of the following questions:

—Have we organized the material to suit the public's needs?

—Are the requirements in the rule clearly stated?

—Does the rule contain technical language or jargon that is not clear?

—Would a different format (grouping and order of sections, use of headings, paragraphing) make the rule easier to understand?

—Would more (but shorter) sections be better?

—Could we improve clarity by adding tables, lists, or diagrams?

—What else could we do to make the rule easier to understand?

If you have any responses to these questions, please include them in your comments on this NPRM.

IX. Submission of Comments

How Can I Influence NHTSA's Thinking on This Proposed Rule?

In developing this NPRM, we tried to address the concerns of all our stakeholders. Your comments will help us improve this rule. We invite you to provide different views on options we propose, new approaches we have not considered, new data, how this proposed rule may affect you, or other relevant information. We welcome your views on all aspects of this proposed rule, but request comments on specific issues throughout this document. We grouped these specific requests near the end of the sections in which we discuss the relevant issues. Your comments will be most effective if you follow the suggestions below:

Explain your views and reasoning as clearly as possible.

- Provide solid technical and cost data to support your views.
- If you estimate potential costs, explain how you arrived at the estimate.
- Tell us which parts of the NPRM you support, as well as those with which you disagree.
- Provide specific examples to illustrate your concerns.
- Offer specific alternatives.
- Refer your comments to specific sections of the NPRM, such as the units or page numbers of the preamble, or the regulatory sections.
- Be sure to include the name, date, and docket number with your comments.

How Do I Prepare and Submit Comments?

Your comments must be written and in English. To ensure that your comments are correctly filed in the Docket, please include the docket number of this document in your comments.

Your comments must not be more than 15 pages long. (49 CFR 553.21). We established this limit to encourage you to write your primary comments in a concise fashion. However, you may attach necessary additional documents to your comments. There is no limit on the length of the attachments.

Please submit two copies of your comments, including the attachments, to Docket Management at the address given above under **ADDRESSES**.

In addition, for those comments of 4 or more pages in length, we request that you send one copy on computer disc to: Dr. George Mouchahoir, Chief, Special Vehicles & Systems Division, NPS–12, National Highway Traffic Safety Administration, 400 Seventh Street, SW, Washington, DC 20590. We emphasize that this is not a requirement. However, we ask that you do this to aid us in expediting our review of all comments. The copy on computer disc may be in any format, although we would prefer that it be in WordPerfect 8.

Comments may also be submitted to the docket electronically by logging onto the Dockets Management System website at http://dms.dot.gov. Click on ''Help & Information'' or ''Help/Info'' to obtain instructions for filing the document electronically.

How Can I Be Sure That my Comments Were Received?

If you wish Docket Management to notify you upon its receipt of your comments, enclose a self-addressed, stamped postcard in the envelope containing your comments. Upon receiving your comments, Docket Management will return the postcard by mail.

How Do I Submit Confidential Business Information?

If you wish to submit any information under a claim of confidentiality, you should submit three copies of your

complete submission, including the information you claim to be confidential business information, to the Chief Counsel, NHTSA, at the address given above under **FOR FURTHER INFORMATION CONTACT**. In addition, you should submit two copies, from which you have deleted the claimed confidential business information, to Docket Management at the address given above under **ADDRESSES**. When you send a comment containing information claimed to be confidential business information, you should include a cover letter setting forth the information specified in our confidential business information regulation. (49 CFR part 512.)

Will the Agency Consider Late Comments?

We will consider all comments that Docket Management receives before the close of business on the comment closing date indicated above under **DATES**. To the extent possible, we will also consider comments that Docket Management receives after that date. If Docket Management receives a comment too late for us to consider it in developing a final rule (assuming that one is issued), we will consider that comment as an informal suggestion for future rulemaking action.

How Can I Read the Comments Submitted by Other People and Other Materials Relevant to This Rulemaking?

You may view the materials in the docket for this rulemaking on the Internet. This materials include the written comments submitted by other interested persons and the preliminary regulatory evaluation prepared by this agency. You may read them at the address given above under **ADDRESSES**. The hours of the Docket are indicated above in the same location.

You may also see the comments and materials on the Internet. To read them on the Internet, take the following steps:

(1) Go to the Docket Management System (DMS) Web page of the Department of Transportation (http://dms.dot.gov/).

(2) On that page, click on ''search.''

(3) On the next page *(http://dms.dot.gov/search/)*, type in the four-digit docket number shown at the beginning of this document. Example: If the docket number were ''NHTSA–2000–1234,'' you would type ''1234.'' After typing the docket number, click on ''search.''

(4) On the next page, which contains docket summary information for the materials in the docket you selected, click on the desired comments. You may download the comments.

Please note that even after the comment closing date, we will continue to file relevant information in the Docket as it becomes available. Further, some people may submit late comments. Accordingly, we recommend that you periodically check the Docket for new material.

X. Proposed Regulatory Text

List of Subjects in 49 CFR Part 571

Motor vehicle safety, Reporting and record keeping requirements, Tires.

In consideration of the foregoing, the agency is proposing to amend 49 CFR part 571 as follows:

PART 571—FEDERAL MOTOR VEHICLE SAFETY STANDARDS

1. The authority citation for part 571 would be revised to read as follows:

Authority: 49 U.S.C. 322, 30111, 30115, 30117, and 30166; delegation of authority at 49 CFR 1.50.

2. Section 571.214 would be amended by revising S3(b) to read as follows and by removing and reserving S3(c) and S3(d).

§ 571.214 Standard No. 214; Side impact protection.

* * * * *

S3. *Requirements.* * * *

(b) When tested under the conditions of S6, each passenger car manufactured on or after September 1, 1996 shall meet the requirements of S5.1, S5.2, and S5.3 in a 53 km/h (± 1.0 km/h) impact in which the car is struck on either side by a moving deformable barrier. 49 CFR part 572, subpart F 50th percentile male test dummies are placed in the front and rear outboard seating positions on the struck side of the car. However, the rear seat requirements do not apply to passenger cars with a wheelbase greater than 3302 mm, or to passenger cars which have rear seating areas that are so small that the part 572, subpart F dummies cannot be accommodated according to the positioning procedure specified in S7.

(c) [Reserved]

(d) [Reserved]

3. Section 571.301 would be amended by revising S6.1, S6.2, S6.3, S7.1.6(b), S7.2, and S7.3, and adding a new figure 3 at the end of the section to read as follows:

§ 571.301 Standard No. 301; Fuel system integrity.

* * * * *

S6.1 Frontal barrier crash. When the vehicle traveling longitudinally forward at any speed up to and including 48 km/h impacts a fixed collision barrier that is perpendicular to the line of travel of the vehicle, or at any angle up to 30 degrees in either direction from the perpendicular to the line of travel of the vehicle, with 49 CFR part 572 50th percentile male test dummies at each front outboard designated seating position, under the applicable conditions of S7, fuel spillage must not exceed the limits of S5.5.

S6.2 Rear offset moving barrier crash. When the vehicle is impacted from the rear by an offset moving deformable barrier at 80 km/h (± 1.0 km/h) with 49 CFR part 572 50th percentile male test dummies at each front outboard designated seating position, under the applicable conditions of S7, fuel spillage must not exceed the limits of S5.5.

S6.3 Side moving barrier crash. When the vehicle is impacted on either side by a moving deformable barrier at 53 km/h (± 1.0 km/h) with 49 CFR part 572 50th percentile male test dummies at positions required for testing to S7 of Standard No. 214, under the applicable conditions of S7, fuel spillage must not exceed the limits of S5.5.

* * * * *

S7.1.6 * * *

* * * * *

(b) Except as specified in S7.1.1, a multipurpose passenger vehicle, truck, or bus with a GVWR of 4,536 kg or less is loaded to its unloaded vehicle weight, plus the necessary test dummies, as specified in S6, plus 136 kg or its rated cargo and luggage capacity weight, whichever is less, secured to the vehicle and distributed so that the weight on each axle as measured at the tire-ground interface is proportional to its GAWR. Each dummy is restrained only by means that are installed in the vehicle for protection at its seating position.

* * * * *

S7.2 Side moving deformable barrier test conditions. The side moving deformable barrier crash test conditions are those specified in S6 of Standard No. 214, 49 CFR 571.214.

S7.3 Rear offset moving deformable barrier test conditions. The moving deformable barrier is the same as the one shown in Figure 2 of Standard No. 214, 49 CFR 571.214 and specified in 49 CFR part 587, except as otherwise specified in paragraph S7.3(b). The barrier and test vehicle are positioned so that at impact—

(a) The test vehicle is stationary;

(b) The deformable face of the barrier is mounted on the barrier 50 mm lower than the height specified in Standard No. 214, Figure 2;

(c) The barrier is traveling at 80 km/h (± 1.0 km/h); and

(d) The barrier impacts the test vehicle with the longitudinal centerline

of the vehicle parallel to the line of travel and perpendicular to the barrier face within a tolerance of ± 5 degrees. The test vehicle and barrier face are aligned so that the barrier strikes the rear of the vehicle with 70 percent overlap toward either side of the vehicle. So aligned, the barrier face fully engages one half of the rear of the vehicle and partially engages the other half. At impact, the vehicle's longitudinal centerline is located inboard of the side edge of the barrier face by a distance equal to 20 percent of the vehicle's width ± 50 mm. (See Figure 3.) The vehicle's width is the maximum dimension measured across the widest part of the vehicle, including bumpers and molding but excluding such components as exterior mirrors, flexible mud flaps, marker lamps, and dual rear wheel configurations.

* * * * *

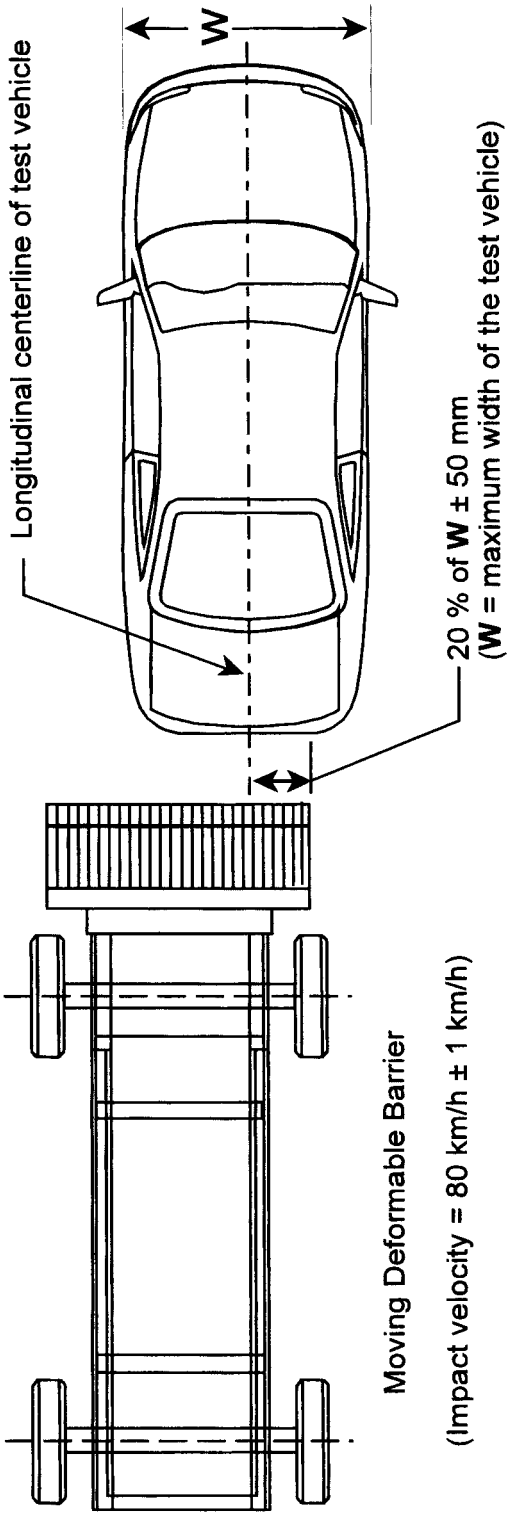

FIGURE 3 – MOVING DEFORMABLE BARRIER REAR IMPACT - 70 % OVERLAP

Issued on: November 6, 2000.

Stephen R. Kratzke,

Associate Administrator for Safety Performance Standards.

[FR Doc. 00–28984 Filed 11–9–00; 8:45 am]

BILLING CODE 4910–59–C

DEPARTMENT OF COMMERCE

National Oceanic and Atmospheric Administration

50 CFR Part 600

[I.D. 110200A]

Magnuson-Stevens Act Provisions; General Provisions for Domestic Fisheries; Applications for Exempted Fishing Permits (EFPs)

AGENCY: National Marine Fisheries Service (NMFS), National Oceanic and Atmospheric Administration (NOAA), Commerce.

ACTION: Notification of a proposal for EFPs to conduct experimental fishing; request for comments.

SUMMARY: NMFS announces that the Administrator, Northeast Region, NMFS (Regional Administrator), has made a preliminary determination to issue EFPs to conduct experimental fishing operations otherwise restricted by the regulations governing the fisheries of the Northeastern United States. Captains Bill Lee and Robert Fisher submitted an application for the issuance of EFPs, which warrants further consideration. The EFPs would allow two commercial vessels to conduct trawl net gear trials with two modified nordmore-style grates in a portion of the Gulf of Maine/Georges Bank Regulated Mesh Area. EFPs would allow for exemptions to the gear restrictions, retention of catch potentially in excess of the possession limits for the purposes of data collection, and exempt vessels from Northeast Multispecies days-at-sea (DAS) requirements. Commercial scale gear trials would look at the interaction of the modified nordmore-style grate and trawl gear with groundfish species; specifically, how the grate and the escape chute, which have been designed to release cod bycatch in the winter flounder fishery, would perform under commercial fishing conditions.

Regulations under the Magnuson-Stevens Act provisions require publication of this notification to provide interested parties the opportunity to comment on the proposed experimental fisheries.

DATES: Comments on this notification must be received by November 28, 2000.

ADDRESSES: Written comments should be sent to the Patricia A. Kurkul, Regional Administrator, NMFS, Northeast Regional Office, 1 Blackburn Drive, Gloucester, MA 01930. Mark the outside of the envelope ''Comments on Proposed EFP Proposal.'' Comments may also be sent via facisimile (fax) to (978) 281-9135. Comments will not be accepted if submitted via e-mail or the Internet.

FOR FURTHER INFORMATION CONTACT: Bonnie Van Pelt, Fishery Management Specialist, 978-281-9244.

SUPPLEMENTARY INFORMATION: On October 18, 2000, Captains Lee and Fisher submitted an application to conduct exempted experimental fishing activities involving commercial gear trials with two modified nordmore-style grates assembled on standard Yankee trawls (modified trawls). This short-term investigation will provide information on the modified trawl gear performance and ability to selectively target winter flounder (*Pleuronectes americanus*) and reduce the rate of bycatch of Atlantic cod (*Gadus morhua*) in the overall catch. The experiment proposes to conduct preliminary gear trials in the shallow waters of Ipswich Bay through video observation of the trawl and modified grate configuration while under tow. The next stage of the gear trials involves a series of 15-minute tows with the grate angled at eight different positions to test for bycatch separation through the escape chute mechanism positioned at the top of the grate. The angle that produces the greatest separation of cod from flounder will be selected for the commercial scale trials in deeper waters. The final phase is designed to produce statistically valid data on the rate of reduction of cod bycatch as a result of the gear modifications. Four 1-hour parallel tows will be made on each of 4 consecutive days in the following sequence: Day 1, control net (standard trawl nets with 6.5-inch (16.5 cm) square codend) towed against a second control net; Day 2, control and experimental net towed in parallel; Day 3, switch the control and experimental nets between the two vessels; and Day 4, both vessels tow experimental nets in parallel. This tow sequence will be duplicated in two different bottom habitats; one primarily sand and the other mud. Therefore, a total of 32 tows with both the experimental and the control nets will be performed in each of two test sites. The entire experiment will require the use of 22 days to complete all phases of gear testing, from the preliminary tests in shallow water to the commercial scale testing in two deeper water sites.

Two nordmore-style grates have been constructed for use in these gear trials. One is made of plastic and the other of steel. Both grates are approximately 40-inches (101.6 cm) in width by 48-inches (121.9 cm) in length. The openings of the grate will lie horizontally and will decrease in aperture from 10-inches (25.4 cm) at the lowest bar spacing, becoming progressively smaller in 2-inch (5.1 cm) increments, until the fifth bar from the bottom, where they remain at the 2-inch bar spacing for the remainder of the upper portion of the grate. The modified nordmore-style grates will be fitted into a standard inshore Yankee trawl with a sweep measuring 80 ft (24.38 m) at the top and 60 ft (18.28 m) at the bottom. Any variability in vessel towing power and efficiency will be alleviated through the parallel gear testing sequence designed to quantify this variability.

All catch brought on board the vessels will be sorted and measured and returned to the sea immediately. It is estimated that the average maximum catch rate would be 6,720 to 8,400 lb (3,048 to 3,810 kg), based on a total towing time of 84 hours and a maximum average catch rate of 80 to 100 lb (36.3 to 45.4 kg) per 4-hour tow. Projections for average catch rates in the experimental net under experimental towing conditions are 5,040 lb (2,286 kg) based 84-hours total tow time, assuming that approximately 80 percent of the cod escape and that the catch composition on the bottom is 50 percent flounder and 50 percent cod and the total catch retained is 60 lb (27.2 kg)--50 lb flounder, 10 lb cod. The current net design has about a 20 percent bycatch of all other incidental species, including crabs, lobsters, whiting, and hake.

All data will be recorded by a biologist who will perform statistical analyses on significance demonstrating the ability of the experimental net configuration to separate cod bycatch from the targeted catch, flounder. A report and a short video to show the grate under construction and functioning in the water will be supplied to the Northeast Consortium. It is projected that this study may lead to other studies to further refine and develop a modified trawl net that will selectively fish for flatfish, while avoiding roundfish species (i.e., cod and monkfish) in soft mud and sandy bottom habitats.

EFPs would be issued to two participating vessels in accordance with the conditions stated therein, and will exempt vessels from the gear restrictions and DAS requirements of the Fishery Management Plan for the Northeast Multispecies Fishery.

Authority: 16 U.S.C. 1801 *et seq.*

Dated: November 6, 2000.

Bruce Morehead,

Acting Director, Office of Sustainable Fisheries, National Marine Fisheries Service.

[FR Doc. 00–28951 Filed 11–09–00; 8:45 am]

BILLING CODE: 3510–22–S

DEPARTMENT OF COMMERCE

National Oceanic and Atmospheric Administration

50 CFR Part 600

[I.D. 102500A]

Magnuson-Stevens Act Provisions; General Provisions for Domestic Fisheries; Applications for Exempted Fishing Permits (EFPs)

AGENCY: National Marine Fisheries Service (NMFS), National Oceanic and Atmospheric Administration (NOAA), Commerce.

ACTION: Notification of a denial of a proposal for EFPs.

SUMMARY: NMFS announces that the Administrator, Northeast Region, NMFS (Regional Administrator), has denied the request to issue EFPs to conduct fishing operations otherwise restricted by the regulations governing the fisheries of the Northeastern United States due to enforcement difficulties. A delegation of the City of Gloucester, composed of representatives of the Commonwealth of Massachusetts, the Gloucester Mayor's Office, local industry, the Gloucester Fisheries Commission, and the Massachusetts Fisheries Recovery Commission, requested the issuance of EFPs to conduct a 3-month pilot study beginning October 1, 2000. The EFPs would have allowed commercial vessels to enter Gloucester Harbor with overages of haddock to seek refuge from unsafe weather conditions related to wind and sea state.

FOR FURTHER INFORMATION CONTACT: Bonnie Van Pelt, Fishery Management Specialist, 978-281-9244.

SUPPLEMENTARY INFORMATION: On August 29, 2000, NMFS published notification of an application for an EFP to address safety issues associated with haddock trip limits (65 FR 52404). The EFP would have allowed commercial vessels to enter Gloucester Harbor with overages of haddock when unsafe conditions caused by wind or sea state prevent the vessels from remaining at sea. A more detailed description of the proposed EFP pilot program was contained in that notice and is not repeated here.

The Joint Enforcement Oversight and Advisory Panel (Enforcement Committee), consisting of members of the NMFS Office of Enforcement, the U.S. Coast Guard, and the Commonwealth of Massachusetts, met on September 21, 2000, to discuss the EFP pilot program application. The Enforcement Committee passed a motion that was carried forward to the New England Fishery Management Council (Council) that the pilot program not be approved in its current form due to the difficulty in adequately enforcing the EFP conditions. The Council agreed that the pilot program should not be pursued in its current form and advised NMFS not to approve the pilot program. Therefore, because of the enforcement concerns, and the recommendation of the Council, the Regional Administrator has denied the EFP application.

Additionally, because projections of the total allowable catch (TAC) target for haddock indicate that the haddock target TAC will not be harvested by the end of the current fishing year (April 30, 2001), the Regional Administrator has recently suspended the daily trip limits for haddock through February 28, 2001 (65 FR 63549, October 24, 2000), while maintaining the per trip maximum possession limit, as authorized under 50 CFR 648.86(a)(iii)(B). Eliminating the daily trip limit for haddock during the period when weather-related sea conditions have historically been the worst also eliminates the need for vessels fishing for haddock to wait out hazardous weather conditions at sea and relieves the need for the proposed EFP.

Dated: November 6, 2000.

Bruce C. Morehead,

Acting Director, Office of Sustainable Fisheries, National Marine Fisheries Service.

[FR Doc. 00–28954 Filed 11–09–00; 8:45 am]

BILLING CODE 3510–22–S

Notices

Federal Register

Vol. 65, No. 219

Monday, November 13, 2000

This section of the FEDERAL REGISTER contains documents other than rules or proposed rules that are applicable to the public. Notices of hearings and investigations, committee meetings, agency decisions and rulings, delegations of authority, filing of petitions and applications and agency statements of organization and functions are examples of documents appearing in this section.

DEPARTMENT OF AGRICULTURE

Animal and Plant Health Inspection Service

[Docket No. 00–098–1]

Notice of Request for Extension of Approval of an Information Collection

AGENCY: Animal and Plant Health Inspection Service, USDA.

ACTION: Extension of approval of an information collection; comment request.

SUMMARY: In accordance with the Paperwork Reduction Act of 1995, this notice announces the Animal and Plant Health Inspection Service's intention to request an extension of approval of an information collection in support of regulations intended to prevent the introduction of fruit flies from Hawaii onto the mainland United States.

DATES: We invite you to comment on this docket. We will consider all comments that we receive by January 12, 2001.

ADDRESSES: Please send your comment and three copies to:

Docket No. 00–098–1, Regulatory Analysis and Development

PPD, APHIS, Suite 3C03, 4700 River Road, Unit 118, Riverdale, MD 20737–1238. Please state that your comment refers to Docket No. 00–098–1.

You may read any comments that we receive on this docket in our reading room. The reading room is located in room 1141 of the USDA South Building, 14th Street and Independence Avenue, SW., Washington, DC. Normal reading room hours are 8 a.m. to 4:30 p.m., Monday through Friday, except holidays. To be sure someone is there to help you, please call (202) 690–2817 before coming.

APHIS documents published in the **Federal Register**, and related information, including the names of organizations and individuals who have commented on APHIS dockets, are available on the Internet at http://www.aphis.usda.gov/ppd/rad/webrepor.html.

FOR FURTHER INFORMATION CONTACT: For information regarding the interstate movement of fruits and vegetables from Hawaii, contact Ms. Donna L. West, Import Specialist, Phytosanitary Issues Management Team, PPQ, APHIS, 4700 River Road Unit 140, Riverdale, MD 20737–1236; (301) 734–6799. For copies of more detailed information on the information collection, contact Mrs. Celeste Sickles, APHIS' Information Collection Coordinator, at (301) 734–7477.

SUPPLEMENTARY INFORMATION:

Title: Fruit from Hawaii.

OMB Number: 0579–0123.

Expiration Date of Approval: November 30, 2000.

Type of Request: Extension of approval of an information collection.

Abstract: The Plant Protection & Quarantine Division (PPQ) of the United States Department of Agriculture's Animal and Plant Health Inspection Service regulates the interstate movement of fruits and vegetables from Hawaii to prevent the spread of the Mediterranean fruit fly, the melon fruit fly, the Oriental fruit fly, and the Malaysian fruit fly pests that occur in Hawaii and that could cause millions of dollars in damage to U.S. agriculture if they become established on the mainland United States. These regulations are at 7 CFR, part 318, §§ 318.13 through 318.13–17.

We have in place regulations designed to facilitate the movement of abui, atemoya, bananas, longan, rambutan, sapodilla, durian, papayas, carambolas, litchis, and other fruits and vegetables from Hawaii while continuing to provide protection against the spread of fruit flies from Hawaii to the mainland United States. Specifically, our regulations provide for irradiation of this fruit in Hawaii prior to being moved to the mainland United States. In addition, the regulations allow abui, atemoya, bananas, longan, rambutan, sapodilla, papayas, carambolas, litchis that have not been irradiated in Hawaii to be moved to non-fruit fly supporting areas of the mainland United States for irradiation treatment. The regulations also allow durian (which is not a fruit fly host) to be moved from Hawaii to the mainland United States provided it is inspected by an authorized inspector in Hawaii and found to be free of certain plant pests.

Regulating the movement of this fruit from Hawaii to the mainland United States requires us to engage in a number of information collection activities, including the use of certificates, limited permits, compliance agreements, requests for treatment facility approval, requests for certification and recertification of testing equipment, and recordkeeping systems.

We are asking the Office of Management and Budget (OMB) to approve, for an additional 3 years, our use of these information collection activities in connection with our program to facilitate the interstate movement of abui, atemoya, bananas, longan, rambutan, sapodilla, durian, papayas, carambolas, litchis, and other fruits and vegetables from Hawaii with minimal risk of introducing destructive fruit flies onto the mainland United States.

The purpose of this notice is to solicit comments from the public (as well as affected agencies) concerning this information collection activity. These comments will help us:

(1) Evaluate whether the information collection is necessary for the proper performance of our Agency's functions, including whether the information will have practical utility;

(2) Evaluate the accuracy of our estimate of the burden of the information collection, including the validity of the methodology and assumptions used;

(3) Enhance the quality, utility, and clarity of the information to be collected; and

(4) Minimize the burden of the collection of information on those who are to respond, through use, as appropriate, of automated, electronic, mechanical, and other collection technologies, e.g., permitting electronic submission of responses.

Estimate of burden: The public reporting burden for this collection of information is estimated to average 15 minutes per response.

Respondents: Fruit and vegetable producers, shippers, importers, exporters, irradiation facility personnel, and State plant regulatory officials.

Estimated annual number of respondents: 300.

Estimated annual number of responses per respondent: 10.

Estimated annual number of responses: 3,000.

Estimated total annual burden on respondents: 750 hours. (Due to rounding, the total annual burden hours may not equal the product of the annual number of responses multiplied by the average reporting burden per response.)

All responses to this notice will be summarized and included in the request for OMB approval. All comments will also become a matter of public record.

Done in Washington, DC, this 2nd day of November 2000 .

Bobby R. Acord

Acting Administrator, Animal and Plant Health Inspection Service.

[FR Doc. 00–28971 Filed 11–9–00; 8:45 am]

BILLING CODE 3410–34–U

DEPARTMENT OF AGRICULTURE

Rural Telephone Bank

Determination of the 2000 Fiscal Year Interest Rates on Rural Telephone Bank Loans

AGENCY: Rural Telephone Bank, USDA.

ACTION: Notice of 2000 fiscal year interest rates determined.

SUMMARY: In accordance with 7 CFR 1610.10, the Rural Telephone Bank (Bank) fiscal year 2000 cost of money rates have been established as follows: 6.01% and 6.05% for advances from the liquidating account and financing account, respectively (fiscal year is the period beginning October 1 and ending September 30).

Except for loans approved from October 1, 1987, through December 21, 1987, where borrowers elected to remain at interest rates set at loan approval, all loan advances made during fiscal year 2000 under Bank loans approved in fiscal years 1988 through 1991 shall bear interest at the rate of 6.01% (the liquidating account rate). All loan advances made during fiscal year 2000 under Bank loans approved during or after fiscal year 1992 shall bear interest at the rate of 6.05% (the financing account rate).

The calculation of the Bank's cost of money rates for fiscal year 2000 for the liquidating account and the financing account are provided in Tables 1 and 2. Since the calculated rates are greater than the minimum rate (5.00%) allowed under 7 U.S.C. 948(b)(3)(A), the cost of money rates for the liquidating account and financing account are set at 6.01% and 6.05%, respectively. The methodology required to calculate the cost of money rates is established in 7 CFR 1610.10(c).

FOR FURTHER INFORMATION CONTACT: Jonathan P. Claffey, Deputy Assistant Administrator, Telecommunications Program, Rural Utilities Service, 1400 Independence Ave., SW., STOP 1590, South Building, Washington, DC 20250, telephone number (202) 720–9556.

SUPPLEMENTARY INFORMATION: The Federal Credit Reform Act of 1990 (''Credit Reform'') (2 U.S.C. 661a, *et seq.*) implemented a system to reform the budgetary accounting and management of Federal credit programs. Bank loans approved on or after October 1, 1991, are accounted for in a different manner than Bank loans approved prior to fiscal year 1992. As a result, the Bank must calculate two cost of money rates: (1) the cost of money rate for advances made from the liquidating account (advances made during fiscal year 2000 on loans approved prior to fiscal year 1992) and (2) the cost of money rate for advances made during fiscal year 2000 on loans approved on or after October 1, 1991 (otherwise referred to as loans from the financing account).

The cost of money rate methodology is the same for both accounts. It develops a weighted average rate for the Bank's cost of money considering total fiscal year loan advances; the excess of fiscal year loan advances over amounts received in the fiscal year from the issuance of Class A, B, and C stocks, debentures and other obligations; and the costs to the Bank of obtaining funds from these sources.

During fiscal year 2000, the Bank was authorized to pay the following dividends: the dividend on Class A stock was 2.00% as established in amended section 406(c) of the Rural Electrification Act (RE Act); no dividends were payable on Class B stock as specified in 7 CFR 1610.10(c); and the dividend on Class C stock was established by the Bank at 5.65%.

Sources and Costs of Funds—Liquidating Account

In accordance with Section 406(a) of the RE Act, the Bank did not issue Class A stock in fiscal year 2000. Advances for the purchase of Class B stock and cash purchases for Class B stock were $496,982. Rescissions of loan funds advanced for Class B stock amounted to $195,750. Thus, the amount received by the Bank from the issuance of Class B stock, per 7 CFR 1610.10(c), was $301,232 ($496,982–$195,750). The amount received by the Bank in fiscal year 2000 from the issuance of Class C stock was $12,684.

The Bank did not issue debentures or any other obligations related to the liquidating account in fiscal year 2000. Consequently, no cost was incurred related to the issuance of debentures subject to 7 U.S.C. 948(b)(3)(D).

The excess of fiscal year 2000 loan advances from the liquidating account over amounts received from issuance of stocks, debentures, and other obligations amounted to $10,122,706. The cost associated with this excess is the historical cost of money rate as defined in 7 U.S.C. 948(b)(3)(D)(v). The calculation of the Bank's historical cost of money rate for advances from the liquidating account is also provided in Table 1. The methodology required to perform this calculation is described in 7 CFR 1610.10(c). The cost for money rates for fiscal years 1974 through 1987 are defined in section 408(b) of the RE Act, as amended by Pub. L. 100–203, and are listed in 7 CFR 1610.10(c) and Table 1 herein.

Sources and Costs of Funds—Financing Account

In accordance with Section 406(a) of the RE Act, the Bank did not issue Class A stock in fiscal year 2000. Advances for the purchase of Class B stock and cash purchases for Class B stock were $1,495,327. Since there were no rescissions of loan funds advanced for Class B stock, the amount received by the Bank from the issuance of Class B stock, per 7 CFR 1610.10(c), was $1,495,327. The Bank did not receive any amounts in fiscal year 2000 from the issuance of Class C stock.

During fiscal year 2000, issuance of debentures or any other obligations related to the financing account were $28,384,191 at an interest rate of 6.36%.

The excess of fiscal year 2000 loan advances from the financing account over amounts received from issuance of stocks, debentures, and other obligations amounted to $1,522,349. The cost associated with this excess is the historical cost of money rate as defined in 7 U.S.C. § 948(b)(3)(D)(v). The calculation of the Bank's historical cost of money rate for advances from the financing account is also provided in Table 2. The methodology required to perform this calculation is described in 7 CFR 1610.10(c).

Dated: October 3, 2000.

Christopher A. McLean,

Governor, Rural Telephone Bank.

BILLING CODE 3410–15–P

TABLE 1

Rural Telephone Bank Cost of Money Rate - Liquidating Account:

FY 2000 Source of Bank Funds	(a) Amount	(b) Cost	(c) (a) x (b)	(c) / Advances
Issuance of Class A Stock	$ -	2.00%	$ -	0.0000%
Issuance of Class B Stock	$ 301,232	0.00%	$ -	0.0000%
Issuance of Class C Stock	$ 12,684	5.65%	$ 717	0.0069%
Issuance of Debentures and Other Obligations	$ -		$ -	0.0000%
Excess of Total Advances Over Issuances	$ 10,122,706	6.19%	$ 626,596	6.0038%
Total FY 2000 Advances	$ 10,436,622	CALCULATED COST OF MONEY RATE =		6.01%
		MINIMUM RATE ALLOWABLE =		5.00%

Rural Telephone Bank Historical Cost of Money Rate - Liquidating Account:

Fiscal Year	(a) Cost of Money	(b) Advances	(c) (a) X (b)	(c) / Total Advances
FY 1974	5.01%	$ 111,022,574	$ 5,562,231	0.233%
FY 1975	5.85%	$ 130,663,197	$ 7,643,797	0.320%
FY 1976	5.33%	$ 99,915,066	$ 5,325,473	0.223%
FY 1977	5.00%	$ 80,907,425	$ 4,045,371	0.170%
FY 1978	5.87%	$ 142,297,190	$ 8,352,845	0.350%
FY 1979	5.93%	$ 130,540,067	$ 7,741,026	0.324%
FY 1980	8.10%	$ 199,944,235	$ 16,195,483	0.679%
FY 1981	9.46%	$ 148,599,372	$ 14,057,501	0.589%
FY 1982	8.39%	$ 112,232,127	$ 9,416,275	0.395%
FY 1983	6.99%	$ 93,402,836	$ 6,528,858	0.274%
FY 1984	6.55%	$ 90,450,549	$ 5,924,511	0.248%
FY 1985	5.00%	$ 72,583,394	$ 3,629,170	0.152%
FY 1986	5.00%	$ 71,582,383	$ 3,579,119	0.150%
FY 1987	5.00%	$ 51,974,938	$ 2,598,747	0.109%
FY 1988	5.00%	$ 119,488,367	$ 5,974,418	0.250%
FY 1989	5.00%	$ 97,046,947	$ 4,852,347	0.203%
FY 1990	5.00%	$ 107,694,991	$ 5,384,750	0.226%
FY 1991	5.43%	$ 163,143,075	$ 8,858,669	0.371%
FY 1992	6.14%	$ 84,940,822	$ 5,215,366	0.219%
FY 1993	6.05%	$ 84,605,366	$ 5,118,625	0.215%
FY 1994	6.15%	$ 54,530,897	$ 3,353,650	0.141%
FY 1995	6.04%	$ 35,967,133	$ 2,172,415	0.091%
FY 1996	6.05%	$ 30,965,187	$ 1,873,394	0.079%
FY 1997	5.98%	$ 32,602,587	$ 1,949,635	0.082%
FY 1998	5.96%	$ 20,673,798	$ 1,232,158	0.052%
FY 1999	6.01%	$ 17,796,518	$ 1,069,571	0.045%
	TOTAL ADVANCES	$ 2,385,571,041	COST OF MONEY	6.19%

TABLE 2

Rural Telephone Bank Cost of Money Rate - Financing Account:

FY 2000 Source of Bank Funds	(a) Amount	(b) Cost	(c) (a) x (b)	(c) / Advances
Issuance of Class A Stock	$ -	2.00%	$ -	0.0000%
Issuance of Class B Stock	$ 1,495,327	0.00%	$ -	0.0000%
Issuance of Class C Stock	$ -	5.65%	$ -	0.0000%
Issuance of Debentures and Other Obligations	$ 28,384,191	6.36%	$ 1,805,235	5.7488%
Excess of Total Advances Over Issuances	$ 1,522,349	6.29%	$ 95,756	0.3049%
Total FY 2000 Advances	$ 31,401,867	CALCULATED COST OF MONEY RATE =		6.05%
		MINIMUM RATE ALLOWABLE =		5.00%

Rural Telephone Bank Historical Cost of Money Rate - Financing Account:

Fiscal Year	(a) Cost of Money	(b) Advances	(c) (a) X (b)	(c) / Total Advances
FY 1992	7.38%	$ 4,056,250	$ 299,351	0.109%
FY 1993	6.35%	$ 23,839,200	$ 1,513,789	0.553%
FY 1994	6.40%	$ 56,838,902	$ 3,637,690	1.328%
FY 1995	6.88%	$ 37,161,517	$ 2,556,712	0.933%
FY 1996	6.42%	$ 44,536,621	$ 2,859,251	1.044%
FY 1997	6.54%	$ 34,368,726	$ 2,247,715	0.821%
FY 1998	5.71%	$ 34,446,458	$ 1,966,893	0.718%
FY 1999	5.54%	$ 38,685,732	$ 2,143,190	0.782%
	TOTAL ADVANCES	$ 273,933,406	COST OF MONEY	6.29%

[FR Doc. 00–28970 Filed 11–09–00; 8:45 am]
BILLING CODE 3410–15–C

COMMITTEE FOR PURCHASE FROM PEOPLE WHO ARE BLIND OR SEVERELY DISABLED

Procurement List; Proposed Additions and Deletions

AGENCY: Committee for Purchase From People Who Are Blind or Severely Disabled.

ACTION: Proposed Additions to and Deletions from Procurement List.

SUMMARY: The Committee is proposing to add to the Procurement List a commodity and services to be furnished by nonprofit agencies employing persons who are blind or have other severe disabilities, and to delete commodities previously furnished by such agencies.

DATES: *Comments must be received on or before:* December 12, 2000.

ADDRESSES: Committee for Purchase From People Who Are Blind or Severely Disabled, Jefferson Plaza 2, Suite 10800, 1421 Jefferson Davis Highway, Arlington, Virginia 22202–3259.

FOR FURTHER INFORMATION CONTACT: Louis R. Bartalot (703) 603–7740.

SUPPLEMENTARY INFORMATION: This notice is published pursuant to 41 U.S.C. 47(a)(2) and 41 CFR 51–2.3. Its purpose is to provide interested persons an opportunity to submit comments on the possible impact of the proposed actions.

Additions

If the Committee approves the proposed addition, all entities of the Federal Government (except as otherwise indicated) will be required to procure the commodity and services listed below from nonprofit agencies employing persons who are blind or have other severe disabilities. I certify that the following action will not have a significant impact on a substantial number of small entities. The major factors considered for this certification were:

1. The action will not result in any additional reporting, recordkeeping or other compliance requirements for small entities other than the small organizations that will furnish the commodity and services to the Government.

2. The action will result in authorizing small entities to furnish the commodity and services to the Government.

3. There are no known regulatory alternatives which would accomplish the objectives of the Javits-Wagner-O'Day Act (41 U.S.C. 46–48c) in connection with the commodity and services proposed for addition to the Procurement List. Comments on this certification are invited. Commenters should identify the statement(s) underlying the certification on which they are providing additional information.

The following commodity and services have been proposed for addition to Procurement List for production by the nonprofit agencies listed:

Commodity

Line, Multi-Loop

1670–01–062–6301
1670–01–062–6303
1670–01–062–6306
1670–01–062–6309
1670–01–062–6312
1670–01–062–6313
1670–01–064–4451
1670–01–064–4452
1670–01–064–4454
1670–01–107–7652
NPA: Industrial Opportunities, Inc., Marble, North Carolina

Services

Administrative Services, U.S. Department of Agriculture, Farm Service Agency, Kansas City, Missouri
NPA: Independence & Blue Springs Industries, Inc., Independence, Missouri

Administrative Services, U.S. Department of Agriculture, Farm Service Agency, Kansas City, Missouri
NPA: St. Vincent DePaul Rehabilitation Services of Texas, Inc., Austin, Texas

Administrative Services, U.S. Department of Agriculture, Rural Development Agency, St. Louis, Missouri
NPA: St. Vincent DePaul Rehabilitation Services of Texas, Inc., Austin, Texas

Food Service, Kirtland Air Force Base, New Mexico
NPA: RCI, Inc., Albuquerque, New Mexico

Janitorial/Custodial

Department of the Treasury, Federal Law Enforcement Training Center, Bldgs. 161, 163, 165, 167, Glynco, Georgia
NPA: Goodwill Industries of the Coastal Empire, Inc., Savannah, Georgia

Warehousing & Distribution Service

Defense Supply Center—Philadelphia, Philadelphia, Pennsylvania
NPA: The Travis Association for the Blind Austin, Texas

Deletions

I certify that the following action will not have a significant impact on a substantial number of small entities. The major factors considered for this certification were:

1. The action will not result in any additional reporting, recordkeeping or other compliance requirements for small entities.

2. The action will result in authorizing small entities to furnish the commodity and services to the Government.

3. There are no known regulatory alternatives which would accomplish the objectives of the Javits-Wagner-O'Day Act (41 U.S.C. 46–48c) in connection with the commodity and services proposed for deletion from the Procurement List.

The following commodities have been proposed for deletion from the Procurement List:

Commodity

Cutlery, Heavy Duty

M.R. 533
M.R. 534
M.R. 535

Applicator, Wax

M.R. 922

Louis R. Bartalot,
Deputy Director (Operations).

[FR Doc. 00–28999 Filed 11–9–00; 8:45 am]
BILLING CODE 6353–01–P

COMMITTEE FOR PURCHASE FROM PEOPLE WHO ARE BLIND OR SEVERELY DISABLED

Procurement List; Additions

AGENCY: Committee for Purchase From People Who Are Blind or Severely Disabled.

ACTION: Additions to the Procurement List.

SUMMARY: This action adds to the Procurement List services to be furnished by nonprofit agencies employing persons who are blind or have other severe disabilities.

EFFECTIVE DATE: December 12, 2000.

ADDRESSES: Committee for Purchase From People Who Are Blind or Severely Disabled, Jefferson Plaza 2, Suite 10800, 1421 Jefferson Davis Highway, Arlington, Virginia 22202–3259.

FOR FURTHER INFORMATION CONTACT: Louis R. Bartalot (703) 603–7740.

SUPPLEMENTARY INFORMATION: On August 25 and September 15, 2000 the Committee for Purchase From People Who Are Blind or Severely Disabled published notices (65 FR 51794 and 55938) of proposed additions to the Procurement List.

Additions

The following comments pertain to Mailroom Operation/Messenger Service, Peace Corps, Washington, DC: Comments were received from the current contractor for this mail operations service. The contractor stated that its staff providing this service are local minority persons, most of whom are the sole support of their families. The contractor indicated that these persons would probably be laid off, as the contractor is uncertain it can replace the work being lost. The contractor also indicated that this service and two other contracts expiring this year represent a significant portion of its business.

According to information the contractor gave the Committee, the portion of its total sales represented by this service does not reach a percentage which the Committee would consider to constitute severe adverse impact on a contractor. The contractor has not provided any information which would indicate, particularly in the current good economy, that the uncertainty of its ability to replace other contracts expiring this year should cause the Committee to give more weight to the impact this Procurement List addition will have on the contractor. Consequently, the Committee does not believe this addition will have a severe adverse impact on the contractor.

The nonprofit agency which will perform this service plans to retain approximately half the contractor's current work force. The nonprofit agency also plans to employ more workers with severe disabilities than contractor workers that will be displaced. Because the unemployment rate for people with severe disabilities remains far above that of the workers being displaced, the Committee believes the contractor workers are more likely to find other employment than the people with severe disabilities would find if this service were not added to the Procurement List.

The following material pertains to all of the items being added to the Procurement List: After consideration of the material presented to it concerning capability of qualified nonprofit agencies to provide the services and impact of the additions on the current or most recent contractors, the Committee has determined that the services listed below are suitable for procurement by the Federal Government under 41 U.S.C. 46–48c and 41 CFR 51–2.4. I certify that the following action will not have a significant impact on a substantial number of small entities. The major factors considered for this certification were:

1. The action will not result in any additional reporting, recordkeeping or other compliance requirements for small entities other than the small organizations that will furnish the services to the Government.

2. The action will not have a severe economic impact on current contractors for the services.

3. The action will result in authorizing small entities to furnish the services to the Government.

4. There are no known regulatory alternatives which would accomplish the objectives of the Javits-Wagner-O'Day Act (41 U.S.C. 46–48c) in connection with the services proposed for addition to the Procurement List.

Accordingly, the following services are hereby added to the Procurement List:

Services

Mailroom Operation/Messenger Service

U.S. Peace Corps Headquarters, 1111 20th Street, NW, Washington, DC

Mailroom Operation

New Orleans Strategic Petroleum Reserve (SPR) Site, New Orleans, Louisiana

Switchboard Operation

Department of Justice, FBI Academy, Quantico, Virginia

This action does not affect current contracts awarded prior to the effective date of this addition or options that may be exercised under those contracts.

Louis R. Bartalot,

Deputy Director (Operations).

[FR Doc. 00–29000 Filed 11–9–00; 8:45 am]

BILLING CODE 6353–01–P

DEPARTMENT OF COMMERCE

[I.D. 110700B]

Submission for OMB Review; Comment Request

The Department of Commerce has submitted to the Office of Management and Budget (OMB) for clearance the following proposal for collection of information under the provisions of the Paperwork Reduction Act (44 U.S.C. Chapter 35).

Agency: National Oceanic and Atmospheric Administration (NOAA).

Title: Fisheries Capacity Reduction Program Advanced Referenda and Other Requirements.

Form Number(s): None.

OMB Approval Number: 0648-0413.

Type of Request: Regular submission.

Burden Hours: 3,200.

Number of Respondents: 800.

Average Hours Per Response: 4 hours.

Needs and Uses: NOAA conducts a program to reduce excess fishing capacity by paying fishermen to (1) surrender their fishing permits or (2) both surrender their permits and either scrap their vessels or restrict vessel titles to prevent fishing. Separately approved requirements for the program included a referendum to be held at a certain point in the process. Comments on the proposed rule indicated that additional referenda may be needed. NOAA also decided that certain requirements that were considered implicitly part of previous requirements need to be made explicit. The submission to OMB covers the additional referenda and those other requirements.

Affected Public: Business and other for-profit organizations, individuals.

Frequency: On occasion.

Respondent's Obligation: Mandatory.

OMB Desk Officer: David Rostker, (202) 395-3897.

Copies of the above information collection proposal can be obtained by calling or writing Madeleine Clayton, Departmental Forms Clearance Officer, (202) 482-3129, Department of Commerce, Room 6086, 14th and Constitution Avenue, NW, Washington, DC 20230 (or via the Internet at MClayton@doc.gov).

Written comments and recommendations for the proposed information collection should be sent within 30 days of publication of this notice to David Rostker, OMB Desk Officer, Room 10202, New Executive Office Building, Washington, DC 20503.

Dated: November 3, 2000.

Gwellnar Banks,

Management Analyst, Office of the Chief Information Officer.

[FR Doc. 00–28953; Filed 11–9–00; 8:45am]

BILLING CODE 3510–22–S

DEPARTMENT OF COMMERCE

Office of Inspector General

Performance Review Board Membership

The following individuals are eligible to serve on the Performance Review Board (PRB) in accordance with the Department of Commerce Senior Executive Service Performance Appraisal System and the Office of Inspector General's PRB Charter:

Edward L. Blansitt, Deputy Inspector General

Elizabeth T. Barlow, Counsel to the Inspector General

Jill A. Gross, Assistant Inspector General for Inspections & Evaluations
Judith J. Gordon, Assistant Inspector General for Systems Evaluation
Stephen E. Garmon, Assistant Inspector General for Investigations
Robert Seabrooks, Assistant Inspector General for Auditing, Small Business Administration

Denise A. Yaag,

Executive Secretary, Performance Review Board, Office of Inspector General.

[FR Doc. 00–28949 Filed 11–9–00; 8:45 am]

BILLING CODE 3510–55–M

DEPARTMENT OF COMMERCE

Bureau of the Census

[Docket Number 001102308–0308–01]

RIN Number 0607–XX58

2000 Company Organization Survey

AGENCY: Bureau of the Census, Commerce.

ACTION: Notice of Determination.

SUMMARY: The U.S. Census Bureau is conducting the 2000 Company Organization Survey. The survey's data are needed, in part, to update the multiestablishment companies in the Business Register. The survey, which has been conducted annually since 1974, is designed to collect information on the number of employees, payroll, geographic location, current operational status, and kind of business for the establishments of multilocation companies. We have determined that annual data collected from this survey are needed to aid the efficient performance of essential governmental functions and have significant application to the needs of the public and industry. The data derived from this survey are not available from any other source.

FOR FURTHER INFORMATION CONTACT: Paul Hanczaryk, Economic Planning and Coordination Division, U.S. Census Bureau, Room 2747, Federal Building 3, Washington, DC 20233–6100, telephone (301) 457–4058.

SUPPLEMENTARY INFORMATION: Title 13, United States Code (U.S.C.), Sections 182, 195, 224, and 225, authorize the Census Bureau to undertake surveys necessary to furnish current data on the subjects covered by the major censuses. This survey will provide continuing and timely national statistical data for the period between economic censuses. The next economic censuses will be conducted for the year 2002. The data collected in this survey will be within the general scope, type, and character of those that are covered in the economic censuses.

Notwithstanding any other provision of law, no person is required to respond to, nor shall a person be subject to a penalty for failure to comply with, a collection of information subject to the requirements of the Paperwork Reduction Act (PRA) unless that collection of information displays a current valid Office of Management and Budget (OMB) control number. In accordance with the PRA, 44 U.S.C., Chapter 35, the OMB approved the survey on November 3, 1999, under OMB control Number 0607–0444. We will furnish report forms to organizations included in the survey, and additional copies are available on written request to the Director, U.S. Census Bureau, Washington, DC 20233–0101.

I have, therefore, directed that the 2000 Company Organization Survey be conducted for the purpose of collecting these data.

Dated: November 3, 2000.

Kenneth Prewitt,

Director, Bureau of the Census.

[FR Doc. 00–28874 Filed 11–9–00; 8:45 am]

BILLING CODE 3510–07–P

DEPARTMENT OF COMMERCE

International Trade Administration

[A–570–832]

Pure Magnesium from the People's Republic of China; Continuation of Antidumping Duty Order, Correction

AGENCY: Import Administration, International Trade Administration, Department of Commerce.

ACTION: Notice of Correction to Continuation of Antidumping Duty Order: Pure Magnesium from the People's Republic of China.

SUMMARY: On October 27, 2000, the Department of Commerce (''the Department''), published in the **Federal Register** the continuation of the antidumping duty order on pure magnesium from the People's Republic of China.[1] Subsequent to the publication of the continuation of the antidumping duty order, we identified an error in the ''Determination'' section of the notice. Therefore, we are correcting this error.

The error lies in the last sentence of the last paragraph of the determination section: ''Pursuant to section 751(c)(2) and 751(c)(6) of the Act, the Department intends to initiate the next five-year review of this order not later than April 2005.'' The sentence should be replaced with ''Pursuant to section 751(c)(2) and 751(c)(6) of the Act, the Department intends to initiate the next five-year review of this order not later than September 2005.''

FOR FURTHER INFORMATION CONTACT: Martha V. Douthit, Office of Policy for Imports Administration, International Trade Administration, U.S. Department of Commerce, 14th Street and Constitution Ave., NW, Washington, DC 20230; telephone (202) 482–5050.

Dated: November 3, 2000.

Richard W. Moreland,

Acting Assistant Secretary for Import Administration.

[FR Doc. 00–29006 Filed 11–9–00; 8:45 am]

BILLING CODE 3510–DS–P

[1] See Continuation of Antidumping Duty Order: Pure Magnesium From the People's Republic of China, 65 FR 64422 (October 27, 2000).

DEPARTMENT OF COMMERCE

International Trade Administration

University of Wisconsin—Madison; Notice of Decision on Application for Duty-Free Entry of Scientific Instrument

This is a decision pursuant to section 6(c) of the Educational, Scientific and Cultural Materials Importation Act of 1966 (Pub. L. 89–651, 80 Stat. 897; 15 CFR part 301). Related records can be viewed between 8:30 a.m. and 5 p.m. in Room 4211, U.S. Department of Commerce, 14th and Constitution Avenue, NW., Washington, DC.

Decision: Denied. Applicant has failed to establish that domestic instruments of equivalent scientific value to the foreign instrument for the intended purposes are not available.

Reasons: Section 301.5(e)(4) of the regulations requires the denial of applications that have been denied without prejudice to resubmission if they are not resubmitted within the specified time period. This is the case for the following docket.

Docket Number: 00–020. *Applicant:* University of Wisconsin—Madison, Madison, WI 53706–1490. *Instrument:* Zebra Fish Tank Installation. *Manufacturer:* Aquarien-Bau Schwarz, Germany. Date of Denial Without Prejudice to Resubmission: August 2, 2000.

Gerald A. Zerdy,

Program Manager, Statutory Import Programs Staff.

[FR Doc. 00–29007 Filed 11–9–00; 8:45 am]

BILLING CODE 3510–DS–P

DEPARTMENT OF COMMERCE

National Oceanic and Atmospheric Administration

[110700A]

Submission for OMB Review; Comment Request

AGENCY: National Oceanic and Atmospheric Administration (NOAA), Commerce.

ACTION: At-Sea Scale Certification Program.

SUPPLEMENTARY INFORMATION: The Department of Commerce has submitted to the Office of Management and Budget (OMB) for clearance the following proposal for collection of information under the provisions of the Paperwork Reduction Act (44 U.S.C. Chapter 35).

Form Number(s): None.

OMB Approval Number: 0648-0330.

Type of Request: Regular submission.

Burden Hours: 3,508.

Number of Respondents: 49.

Average Hours Per Response: 45 minutes for a daily scale test, 6 minutes per day to retain printed scale output, 6 minutes to request a scale inspection, 6 minutes to attach a scale approval sticker, 6 minutes for an application for authority to inspect scales, 2 hours for a request for an observer station inspection, and 30-190 hours for scale type evaluations.

Needs and Uses: Fishermen on certain Federally-regulated fisheries off Alaska must weigh their catch at sea on approved scales. Vessels must request inspection of scales and observer stations, test their scales daily, and maintain output from the scales. Related information collection requirements are requests from scale manufacturers to have their scale approved, and requests from non-NOAA scale inspectors to have authority to conduct scale inspections.

Affected Public: Business and other for-profit organizations.

Frequency: Daily, annually, and on occasion.

Respondent's Obligation: Mandatory.

OMB Desk Officer: David Rostker, (202) 395-3897.

Copies of the above information collection proposal can be obtained by calling or writing Madeleine Clayton, DOC Forms Clearance Officer, (202) 482-3129, Department of Commerce, Room 6086, 14th and Constitution Avenue, NW, Washington, DC 20230 (or via the Internet at MClayton@doc.gov).

Written comments and recommendations for the proposed information collection should be sent within 30 days of publication of this notice to David Rostker, OMB Desk Officer, Room 10202, New Executive Office Building, Washington, DC 20503.

Dated: November 3, 2000.

Gwellnar Banks,

Management Analyst, Office of the Chief Information Officer.

[FR Doc. 00–28952 Filed 11–9–00; 8:45 am]

BILLING CODE: 3510–22 –S

DEPARTMENT OF DEFENSE

Office of the Secretary

Civilian Health and Medical Program of the Uniformed Services (CHAMPUS); Fiscal Year 2001 Diagnosis Related Group (DRG) Updates

AGENCY: Office of the Secretary, DoD.

ACTION: Notice of DRG revised rates.

SUMMARY: This notice describes the changes made to the TRICARE/CHAMPUS DRG-based payment system in order to conform to changes made to the Medicare Prospective Payment System (PPS).

It also provides the updated fixed loss cost outlier threshold, cost-to-charge ratios and the Internet address for accessing the updated adjusted standardized amounts, DRG relative weights, and beneficiary cost-share per diem rates to be used for FY 2001 under the TRICARE/CHAMPUS DRG-based payment system.

EFFECTIVE DATES: The rates, weights and Medicare PPS changes which affect the TRICARE/CHAMPUS DRG-based payment system contained in this notice are effective for admissions occurring on or after October 1, 2000.

ADDRESSES: TRICARE Management Activity (TMA), Medical Benefits and Reimbursement Systems, 16401 East Centretech Parkway, Aurora, CO 80011–9043. For copies of the **Federal Register** containing this notice, contact the Superintendent of Documents, U.S. Government Printing Office, Washington, D.C. 20402, (202) 783–3238. The charge for the **Federal Register** is $1.50 for each issue payable by check or money order to the Superintendent of Documents.

FOR FURTHER INFORMATION CONTACT: Marty Maxey, Medical Benefits and Reimbursement Systems, TMA, telephone (303) 676–3627.

To obtain copies of this document, see the **ADDRESSES** section above. Questions regarding payment of specific claims under the TRICARE/CHAMPUS DRG-based payment system should be addressed to the appropriate contractor.

SUPPLEMENTARY INFORMATION: The final rule published on September 1, 1987 (52 FR 32992) set forth the basic procedures used under the CHAMPUS DRG-based payment system. This was subsequently amended by final rules published August 31, 1988 (53 FR 33461), October 21, 1988 (53 FR 41331), December 16, 1988 (53 FR 50515), May 30, 1990 (55 FR 21863), October 22, 1990 (55 FR 42560), and September 10, 1998 (63 FR 48439).

An explicit tenet of these final rules, and one based on the statute authorizing the use of DRGs by TRICARE/CHAMPUS, is that the TRICARE/CHAMPUS DRG-based payment system is modeled on the Medicare PPS, and that, whenever practicable, the TRICARE/CHAMPUS system will follow the same rules that apply to the Medicare PPS. HCFA publishes these changes annually in the **Federal Register** and discusses in detail the impact of the changes.

In addition, this notice updates the rates and weights in accordance with our previous final rules. The actual changes we are making, along with a description of their relationship to the Medicare PPS, are detailed below.

I. Medicare PPS Changes Which Affect the TRICARE/CHAMPUS DRG-Based Payment System

Following is a discussion of the changes the Health Care Financing Administration (HCFA) has made to the Medicare PPS that affect the TRICARE/CHAMPUS DRG-based payment system.

A. DRG Classifications

Under both the Medicare PPS and the TRICARE/CHAMPUS DRG-based payment system, cases are classified into the appropriate DRG by a Grouper program. The Grouper classifies each case into a DRG on the basis of the diagnosis and procedure codes and demographic information (that is, sex, age, and discharge status). The Grouper used for the TRICARE/CHAMPUS DRG-based payment system is the same as the current Medicare Grouper with two modifications. The TRICARE/CHAMPUS system has replaced Medicare DRG 435 with two age-based DRGs (900 and 901), and has implemented thirty-four (34) neonatal DRGs in place of Medicare DRGs 385 through 390. For admissions occurring on or after October 1, 1995, the CHAMPUS grouper hierarchy logic was changed so the age split (age <29 days) and assignments to MDC 15 occur before assignment of the PreMDC DRGs. This resulted in all neonate tracheostomies and organ transplants to be grouped to MDC 15 and not to DRGs

480–483 or 495. For admissions occurring on or after October 1, 1998, the CHAMPUS grouper hierarchy logic was changed to move DRG 103 to the PreMDC DRGs and to assign patients to PreMDC DRGs 480, 103 and 495 before assignment to MDC 15 DRGs and the neonatal DRGs.

For FY 2001, HCFA will implement classification changes, including surgical hierarchy changes. The CHAMPUS Grouper will incorporate all changes made to the Medicare Grouper.

B. Wage Index and Medicare Geographic Classification Review Board Guidelines

TRICARE/CHAMPUS will continue to use the same wage index amounts used for the Medicare PPS. In addition, TRICARE/CHAMPUS will duplicate all changes with regard to the wage index for specific hospitals that are redesignated by the Medicare Geographic Classification Review Board.

C. Hospital Market Basket

TRICARE/CHAMPUS will update the adjusted standardized amounts according to the final updated hospital market basket used for the Medicare PPS according to HCFA's August 1, 2000, final rule.

D. Outlier Payments

Since TRICARE/CHAMPUS does not include capital payments in our DRG-based payments, we will use the fixed loss cost outlier threshold calculated by HCFA for paying cost outliers in the absence of capital prospective payments. For FY 2001, the fixed loss cost outlier threshold is based on the sum of the applicable DRG-based payment rate plus any amounts payable for IDME plus a fixed dollar amount. Thus, for FY 2001, in order for a case to qualify for cost outlier payments, the costs must exceed the TRICARE/CHAMPUS DRG base payment rate (wage adjusted) for the DRG plus the IDME payment plus $16,036 (wage adjusted). The marginal cost factor for cost outliers continues to be 80 percent.

Blood Clotting Factor

For FY 2001, TRICARE/CHAMPUS will use the following HCPCS codes and payment rates for blood clotting factors:

	Per unit
J7190 Factor VIII (antihemophilic factor—human)	$0.85
J7191 Factor VIII (antihemophilic factor—porcine)	2.09
J7192 Factor VIII (antihemophilic factor—recombinant)	1.12
J7194 Factor IX (complex)	0.31
J7198 Anti-inhibitor	1.43
Q0160 Factor IX (antihemophilic factor, purified, Non-recombinant)	1.05
Q0161 Factor IX (antihemophilic factor, recombinant)	1.12

Indirect Medical Education (IDME) Adjustment

The Balanced Budget Refinement Act of 1999, modified the transition for the IDME adjustment that was established by the Balanced Budget Act of 1997. The new multiplier for the IDME adjustment factor for TRICARE/CHAMPUS for FY 2001 is 1.16.

II. Cost to Charge Ratio

For FY 2001, the cost-to-charge ratio used for the TRICARE/CHAMPUS DRG-based payment system will be 0.5353, which is increased to 0.5408 to account for bad debts. This shall be used to calculate the adjusted standardized amounts and to calculate cost outlier payments, except for children's hospitals. For children's hospital cost outliers, the cost-to-charge ratio used is 0.5913.

III. Updated Rates and Weights

The updated rates and weights are accessible through the Internet at *www.tricare.osd.mil* under the heading TRICARE Provider Information. Table 1 provides the ASA rates and Table 2 provides the DRG weights to be used under the TRICARE/CHAMPUS DRG-based payment system during FY 2001 and which is a result of the changes described above. The implementing regulations for the TRICARE/CHAMPUS DRG-based payment system are in 32 CFR part 199.

Dated: November 6, 2000.

L.M. Bynum,

Alternate OSD Federal Register, Liaison Officer, Department of Defense.

[FR Doc. 00–28866 Filed 11–9–00; 8:45 am]

BILLING CODE 5001–10–M

DEPARTMENT OF DEFENSE

Office of the Secretary

Renewal of the Planning and Steering Advisory Committee (Navy)

ACTION: Notice.

SUMMARY: The Planning and Steering Advisory Committee (PSAC) has been renewed in consonance with the public interest, and in accordance with the provisions of Public Law 92–463, the ''Federal Advisory Committee Act.''

The PSAC provides an avenue of communications by which a distinguished group representing scientific, academic engineering, and intelligence communities advises the Chief of Naval Operations on questions related to SSBN Security. Their mission is to make in-depth technical assessments of U.S. and foreign threat ASW developments and related technologies, to critically review programs which potentially impact SSBN survivability, and to evaluate intelligence efforts to identify and define ASW and SSBN survivability threats.

The Committee will continue to be composed of selected Group members to conduct detailed examinations of matters related to SSBN security.

FOR FURTHER INFORMATION CONTACT: Please contact Laura Wurzer, telephone: 301–693–0934.

Dated: November 6, 2000.

L.M. Bynum,

Alternate OSD Federal Register Liaison Officer, Department of Defense.

[FR Doc. 00–28863 Filed 11–9–00; 8:45 am]

BILLING CODE 5001–10–M

DEPARTMENT OF DEFENSE

Office of the Secretary

Renewal of the Telecommunications Service Priority System Oversight Committee (TSPOC)

ACTION: Notice.

SUMMARY: The TSPOC has been renewed in consonance with the public interest, and in accordance with the provisions of Pub. L. 92–463, the ''Federal Advisory Committee Act.''

The TSPOC provides advice and recommendations to the Secretary of Defense regarding the priority treatment of national security and emergency preparedness telecommunications services. Functions include evaluating the currency of policies, procedures and system documentation requirements, and assessing the adequacy of the system in the light of technological advances.

The TSPOC will continue to be composed of 18 members, both federal, state and local government, and non-government individuals, who are experts in telecommunications services. Efforts will be made to ensure that there is a fairly balanced membership in terms of the functions to be performed and the interest groups represented.

FOR FURTHER INFORMATION CONTACT: Ms. Debbie Bea, National Communications

System, Defense Information Systems Agency, telephone: 703–607–4933.

Dated: November 6, 2000.

L.M. Bynum,

Alternate OSD Federal Register Liaison Officer, Department of Defense.

[FR Doc. 00–28862 Filed 11–9–00; 8:45 am]

BILLING CODE 5001–10–M

DEPARTMENT OF DEFENSE

Office of the Secretary

Meeting of the Advisory Panel to Assess the Capabilities for Domestic Response to Terrorist Attacks Involving Weapons of Mass Destruction

ACTION: Notice of Meeting.

SUMMARY: This notice sets forth the schedule and summary agenda for the next meeting of the Panel to Assess the Capabilities for Domestic Response to Terrorist Attacks Involving Weapons of Mass Destruction. Notice of this meeting is required under the Federal Advisory Committee Act. (Pub. L. 92–463).

DATES: November 27 and 28, 2000.

ADDRESSES: RAND, 1200 South Hayes Street, Arlington, VA 22202–5050.

PROPOSED SCHEDULE AND AGENDA: Panel to Assess the Capabilities for Domestic Response to Terrorist Attacks Involving Weapons of Mass Destruction will meet from 8:30 a.m. until 5:30 p.m. on November 27, 2000 and from 8:30 a.m. until 3:30 p.m. on November 28, 2000. The meeting will include classified briefings on cyber terrorism and therefore portions of the meeting will be closed to the public. Time will be allocated for public comments by individuals or organizations.

FOR FURTHER INFORMATION CONTACT: RAND provides information about this Panel on its web site at http://www.rand.org/organization/nsrd/terrpanel; it can also be reached at (703) 413–1100 extension 5282. Public comment presentations will be limited to two minutes each and must be provided in writing prior to the meeting. Mail written presentations and requests to register to attend the open public session to: Priscilla Schlegel, RAND, 1200 South Hayes Street, Arlington, VA 22202–5050. Public seating for this meeting is limited, and is available on a first-come, first-served basis.

Dated: November 6, 2000.

L.M. Bynum,

Alternate OSD Federal Register Liaison Officer, Department of Defense.

[FR Doc. 00–28861 Filed 11–9–00; 8:45 am]

BILLING CODE 5001–10–M

DEPARTMENT OF DEFENSE

Office of the Secretary

Defense Partnership Council Meeting

AGENCY: Department of Defense.

ACTION: Notice of Meeting Cancellation.

SUMMARY: On October 12, 2000, 65 FR 60652, the Department of Defense published a notice to announce a meeting of the Defense Partnership Council to be held November 9, 2000. This notice is to announce that the meeting is cancelled due to conflicts in members' schedules.

FOR FURTHER INFORMATION CONTACT: Mr. Ben James, Chief, Labor and Employee Relations Branch, Field Advisory Services Division, Defense Civilian Personnel Management Service, 1400 Key Boulevard, Suite B–200, Arlington, VA 22209–5144, (703) 696–1450.

Dated: November 6, 2000.

L.M. Bynum,

Alternate OSD Federal Register Liaison Officer, DoD.

[FR Doc. 00–28865 Filed 11–9–00; 8:45 am]

BILLING CODE 5001–10–M

DEPARTMENT OF DEFENSE

Office of the Secretary

Executive Committee Meeting of the Defense Advisory Committee on Women in the Services (DACOWITS)

AGENCY: Department of Defense, Advisory Committee on Women in the Services.

ACTION: Notice.

SUMMARY: Pursuant to section 10(a), Public Law 92–463, as amended, notice is hereby given of a forthcoming Quarterly Executive Committee Meeting of the Defense Advisory Committee on Women in the Services (DACOWITS). The purpose of the Executive Committee Meeting is to provide transitional training to the incoming 2001 Executive Committee members and an Awards Presentation for the 2000 Executive Committee members. The Requests for Information Review and the Awards presentation hosted by the Secretary of Defense are open to the public. All other portions are for training only and are not open to the public.

DATES: December 4, 2000, 10:00 a.m.–4:00 p.m.

ADDRESSES: SECDEF Conference Room 3E869, The Pentagon, Washington, DC.

FOR FURTHER INFORMATION CONTACT: Lieutenant Colonel Susan E. Kolb, ARNGUS, DACOWITS and Military Women Matters, OASD (Force Management Policy), 4000 Defense Pentagon, Room 3D769, Washington, DC 20301–4000; telephone (703) 697–2122.

SUPPLEMENTARY INFORMATION: Meeting agenda:

Monday, December 4, 2000

Time and Event

10:00 a.m.: Requests for Information Review
1:45 p.m.: Executive Committee Awards Presentation (Secretary of Defense Conference—5C1042, Please be seated by 1:30 p.m.)

Dated: November 6, 2000.

L.M. Bynum,

Alternate Federal Register Liaison, Department of Defense.

[FR Doc. 00–28864 Filed 11–9–00; 8:45 am]

BILLING CODE 5001–10–M

Delaware River Basin Commission

Notice of Commission Meeting and Public Hearing

Notice is hereby given that the Delaware River Basin Commission will hold an informal conference followed by a public hearing on Wednesday, November 15, 2000. The hearing will be part of the Commission's regular business meeting. Both the conference session and business meeting are open to the public and will be held at the Sheraton Bucks County Hotel, 400 Oxford Valley Road, Langhorne, Pennsylvania.

The conference among the Commissioners and staff will begin at 9:30 a.m. Topics of discussion will include progress reports on the Commission's Comprehensive Plan and Flow Needs Study; a status report on a resolution amending water usage reporting requirements; a proposal for the DRBC to continue to house the Delaware Estuary Program Coordinator and perform certain other administrative functions; and, time permitting, a proposal to institute project review upon retirement of entitlements. Summaries of the following five meetings will be presented: The Water Quality Advisory Committee meeting of October 4; the Toxics Advisory Committee meetings of October 6, October 18 and November 2; and the Christina Basin Policy Committee meeting of November 3. Also scheduled for the conference session is a dialogue with citizens from the West Branch fishery.

The subjects of the public hearing to be held during the 1:30 p.m. business meeting include, in addition to the dockets listed below, two proposed

resolutions—one amending the Comprehensive Plan with respect to recreation areas in the Commonwealth of Pennsylvania and another adopting the Commission's FY 2002 budgets.

The dockets scheduled for public hearing will be as follows:

1. *Pennsylvania Department of Conservation and Natural Resources D–80–7 CP RENEWAL 3.* A renewal of a ground water withdrawal project to supply up to 3 million gallons (mg)/30 days of water to French Creek State Park from Wells A and B in the Hammer Creek Formation. The applicant requests that the total withdrawal from all wells remain limited to 3 mg/30 days. The project is located in Union Township, Berks County in the Southeastern Pennsylvania Ground Water Protected Area.

2. *PSEG Nuclear LLC D–90–71 RENEWAL.* A renewal of a ground water withdrawal project to supply up to 43.2 mg/30 days of water for use at the applicant's Salem and Hope Creek nuclear powered electric generating stations from existing Wells Nos. PW–2 and PW–3 in the Mount Laurel-Wenonah aquifer; Well No. PW–6 in the Middle Raritan aquifer; and Wells Nos. PW–5, HC–1 and HC–2 in the Upper Raritan aquifer. No increase in maximum allocation is proposed, and the water will continue to be used mainly for on-site potable supply as well as industrial processes. The project is located in Lower Alloways Creek Township, Salem County, New Jersey.

3. *City of Wilmington D–98–26 CP.* A project to rerate the applicant's existing sewage treatment plant (STP) from an average monthly flow of 90 million gallons per day (mgd) to a yearly average flow of 105 mgd, with a maximum allowable monthly flow of 134 mgd to treat additional Combined Sewer Overflow. The STP is located in the City of Wilmington, New Castle County, Delaware, and will continue to serve most of northern New Castle County and provide advanced secondary treatment prior to discharge to the Delaware River in Water Quality Zone 5.

4. *Asbury Farms c/o The Cotton Group, Inc. D–98–52.* A ground water withdrawal project to supply up to 11 mg/30 days of water to the applicant's golf course from new holding Pond No. 1, supplemented as needed with water from new Well No. 1 in the Kittatinny Formation. The project is located in Washington Township, Warren County, New Jersey.

5. *Northampton, Bucks County Municipal Authority D–99–1 CP.* A ground water withdrawal project to supply up to 7.2 mg/30 days of water to the applicant's public water distribution system from new Well No. 16, and to retain the existing withdrawal limit from all wells at 66 mg/30 days. The project is located in Northampton Township, Bucks County in the Southeastern Pennsylvania Ground Water Protected Area.

6. *Bucks County Water & Sewer Authority D–2000–22 CP.* A project to expand the applicant's existing Green Street sewage treatment plant from 0.7 mgd to 1.2 mgd. The STP is located off Green Street near the State Route 202 bypass in Doylestown Borough and Doylestown Township, Bucks County, Pennsylvania and will continue to provide advanced secondary treatment for Doylestown Borough and Doylestown Township. The STP will continue to discharge to Country Club Run, a tributary of Neshaminy Creek.

7. *Nova-Borealis Compounds LLC D–2000–39.* A ground water withdrawal project to supply up to 27 mg/30 days of water to the applicant's industrial facility from existing Wells Nos. 1, 2 and 3 in the Martinsburg Shale Formation, and to limit the withdrawal from all wells to 27 mg/30 days. The project is located in Mansfield Township, Warren County, New Jersey.

In addition to the public hearing, the Commission will address the following at its 1:30 p.m. business meeting: minutes of the September 28, 2000 business meeting; announcements; report on hydrologic conditions in the basin; reports by the Executive Director and General Counsel; and public dialogue.

Documents relating to the dockets and other items may be examined at the Commission's offices. Preliminary dockets are available in single copies upon request. Please contact Thomas L. Brand at (609) 883–9500 ext. 221 with any docket-related questions. Persons wishing to testify at this hearing are requested to register in advance with the Secretary at (609) 883–9500 ext. 203.

Individuals in need of an accommodation as provided for in the Americans With Disabilities Act who wish to attend the hearing should contact the Commission Secretary, Pamela M. Bush, directly at (609) 883–9500 ext. 203 or through the New Jersey Relay Service at 1–800–852–7899 (TTY) to discuss how the Commission may accommodate your needs.

Dated: October 30, 2000.

Pamela M. Bush,

Commission Secretary.

[FR Doc. 00–28875 Filed 11–9–00; 8:45 am]

BILLING CODE 6360–01–P

DEPARTMENT OF EDUCATION

Notice of Proposed Information Collection Requests

AGENCY: Department of Education.

SUMMARY: The Leader, Regulatory Information Management Group, Office of the Chief Information Officer, invites comments on the proposed information collection requests as required by the Paperwork Reduction Act of 1995.

DATES: Interested persons are invited to submit comments on or before January 12, 2001.

SUPPLEMENTARY INFORMATION: Section 3506 of the Paperwork Reduction Act of 1995 (44 U.S.C. Chapter 35) requires that the Office of Management and Budget (OMB) provide interested Federal agencies and the public an early opportunity to comment on information collection requests. OMB may amend or waive the requirement for public consultation to the extent that public participation in the approval process would defeat the purpose of the information collection, violate State or Federal law, or substantially interfere with any agency's ability to perform its statutory obligations. The Leader, Regulatory Information Management Group, Office of the Chief Information Officer, publishes that notice containing proposed information collection requests prior to submission of these requests to OMB.

Each proposed information collection, grouped by office, contains the following: (1) Type of review requested, e.g. new, revision, extension, existing or reinstatement; (2) title; (3) summary of the collection; (4) description of the need for, and proposed use of, the information; (5) respondents and frequency of collection; and (6) reporting and/or recordkeeping burden. OMB invites public comment.

The Department of Education is especially interested in public comment addressing the following issues: (1) Is this collection necessary to the proper functions of the Department; (2) will this information be processed and used in a timely manner; (3) is the estimate of burden accurate; (4) how might the Department enhance the quality, utility, and clarity of the information to be collected; and (5) how might the Department minimize the burden of this collection on the respondents, including through the use of information technology.

Dated: November 6, 2000.

John Tressler,

Leader, Regulatory Information Management, Office of the Chief Information Officer.

Office of Special Education and Rehabilitative Services

Type of Review: Revision

Title: State Plan for Independent Living and Center for Independent Living Programs (SC)

Frequency: Annually

Affected Public: State, Local, or Tribal Gov't, SEAs or LEAs; Not-for-profit institutions; Individuals or household; Businesses or other for-profit; Farms; Federal Government

Reporting and Recordkeeping Hour Burden:

Responses: 3,300

Burden Hours: 60

Abstract: Chapter 1 of Title VII of the Rehabilitation Act of 1973, as Amended (Act) authorizes financial assistance to States for providing, expanding and improving the provision of independent living services, to develop and support Statewide networks of Centers for Independent Living (CIL) , to improve working relationships among State Independent Living Services, CILs, Statewide Independent Living Councils, programs funded under other titles of the Act, and other programs that address issues relevant to individuals with disabilities funded by Federal and non-Federal authorities.

Requests for copies of the proposed information collection request may be accessed from *http://edicsweb.ed.gov*, or should be addressed to Vivian Reese, Department of Education, 400 Maryland Avenue, SW, Room 4050, Regional Office Building 3, Washington, DC 20202–4651. Requests may also be electronically mailed to the internet address *OCIO__IMG__Issues@ed.gov* or faxed to 202–708–9346. Please specify the complete title of the information collection when making your request.

Comments regarding burden and/or the collection activity requirements should be directed to Sheila Carey at (202) 708–6287 or via her internet address *Sheila__Carey@ed.gov.* Individuals who use a telecommunications device for the deaf (TDD) may call the Federal Information Relay Service (FIRS) at 1–800–877–8339.

[FR Doc. 00–28894 Filed 11–9–00; 8:45 am]

BILLING CODE 4000–01–P

DEPARTMENT OF EDUCATION

Submission for OMB Review; Comment Request

AGENCY: Department of Education.

SUMMARY: The Leader, Regulatory Information Management Group, Office of the Chief Information Officer invites comments on the submission for OMB review as required by the Paperwork Reduction Act of 1995.

DATES: Interested persons are invited to submit comments on or before December 13, 2000.

ADDRESSES: Written comments should be addressed to the Office of Information and Regulatory Affairs, Attention: Lauren Wittenberg, Acting Desk Officer, Department of Education, Office of Management and Budget, 725 17th Street, NW., Room 10235, New Executive Office Building, Washington, DC 20503 or should be electronically mailed to the internet address Lauren_Wittenberg@omb.eop.gov.

SUPPLEMENTARY INFORMATION: Section 3506 of the Paperwork Reduction Act of 1995 (44 U.S.C. Chapter 35) requires that the Office of Management and Budget (OMB) provide interested Federal agencies and the public an early opportunity to comment on information collection requests. OMB may amend or waive the requirement for public consultation to the extent that public participation in the approval process would defeat the purpose of the information collection, violate State or Federal law, or substantially interfere with any agency's ability to perform its statutory obligations. The Leader, Regulatory Information Management Group, Office of the Chief Information Officer, publishes that notice containing proposed information collection requests prior to submission of these requests to OMB.

Each proposed information collection, grouped by office, contains the following: (1) Type of review requested, e.g. new, revision, extension, existing or reinstatement; (2) title; (3) summary of the collection; (4) description of the need for, and proposed use of, the information; (5) respondents and frequency of collection; and (6) reporting and/or recordkeeping burden. OMB invites public comment.

Dated: November 6, 2000.

John Tressler,

Leader, Regulatory Information Management, Office of the Chief Information Officer.

Office of Special Education and Rehabilitative Services

Type of Review: New.

Title: The National Institute on Disability and Rehabilitation Research (NIDRR) Quality of Research Rating Scale.

Frequency: On occasion.

Affected Public: Individuals or households.

Reporting and Recordkeeping Hour Burden: Responses: 300; Burden Hours: 100.

Abstract: To assess quality of NIDRR funded research, a reliable, valid, and efficient instrument needs to be developed and tested. A form will be administered to 300 people. Responses will be analyzed for validity and reliability. If the results are satisfactory, the form will be used for future quality of research assessment.

Requests for copies of the proposed information collection request may be accessed from *http://edicsweb.ed.gov*, or should be addressed to Vivian Reese, Department of Education, 400 Maryland Avenue, SW, Room 4050, Regional Office Building 3, Washington, DC 20202–4651. Requests may also be electronically mailed to the internet address OCIO_IMG_Issues@ed.gov or faxed to 202–708–9346. Please specify the complete title of the information collection when making your request.

Comments regarding burden and/or the collection activity requirements should be directed to Sheila Carey at (202) 708–6287 or via her internet address Sheila_Carey@ed.gov. Individuals who use a telecommunications device for the deaf (TDD) may call the Federal Information Relay Service (FIRS) at 1–800–877–8339.

[FR Doc. 00–28893 Filed 11–9–00; 8:45 am]

BILLING CODE 4000–01–P

DEPARTMENT OF ENERGY

National Energy Technology Laboratory; Notice of Availability of a Financial Assistance Solicitation

AGENCY: National Energy Technology Laboratory, Department of Energy (DOE).

ACTION: Notice of availability of a financial assistance solicitation.

SUMMARY: Notice is hereby given of the intent to issue Financial Assistance Solicitation No. DE–PS26–00NT41003 entitled ''Infrastructure Reliability for Natural Gas.'' Natural gas consumption in the U.S. is projected to reach or exceed 32 trillion cubic feet (TCF) per year by 2020, increasing from 22 TCF per year in 1997. In addition, potential lower emission targets for greenhouse gases could even increase the demand for natural gas as high as 35 TCF per year. Maintaining the integrity and efficiency of the gas infrastructure may be the most important challenge to achieving a substantial increase in gas deliverability given the age of the existing pipelines. Technological

advances in materials, tools and operations will be needed to maintain the throughput of the current infrastructure and expansion for future system demands.

DATES: The solicitation will be available on the DOE/NETL's Internet address at http://www.netl.doe.gov/business on or about November 9, 2000.

FOR FURTHER INFORMATION CONTACT: Crystal A. Sharp, Contract Specialist MS IO7, U.S. Department of Energy, National Energy Technology Laboratory, P.O. Box 880, 3610 Collins Ferry Road, Morgantown, WV 26507–0880, E-mail Address: csharp@netl.doe.gov, Telephone Number: 304–285–4442.

SUPPLEMENTARY INFORMATION: The purpose of the National Gas Infrastructure Reliability program is to fund research which encourages and promotes research and development efforts resulting in the development of technology which will place the necessary tools and materials into the hands of those who maintain and enhance the integrity and operational reliability of the Nation's natural gas transmission and distribution network. DOE is requesting proposals which support technology developments in the areas of both natural gas transmission and distribution infrastructure. Specifically, proposals are requested under the following topic areas:

1. The development of technology to ensure the integrity and reliability of the design, construction and operation of the natural gas transmission infrastructure;
2. The development of technology to ensure the integrity and reliability of the design, construction and operation of the natural gas distribution infrastructure; and
3. The development of technology which may crosscut topics 1 and 2.

It is anticipated that there will be multiple awards resulting from this solicitation. DOE has determined that a minimum cost share of 35% of the total cost is required for this solicitation research. At current planning levels, and subject to the availability of funds, DOE expects to provide up to approximately $10,000,000 to support work under this solicitation.

Prospective applicants who would like to be notified as soon as the solicitation is available should register at http://www.netl.doe.gov/business. Provide your E-mail address and click on the ''Oil and Gas'' technology choice located under the heading ''Fossil Energy.'' Once you subscribe, you will receive an announcement by E-mail that the solicitation has been released to the public.

Telephone requests, written requests, E-mail requests, or facsimile requests for a copy of the solicitation package will not be accepted and/or honored. Applications must be prepared and submitted in accordance with the instructions and forms contained in the solicitation. The actual solicitation document will allow for requests for explanation and/or interpretation.

Issued in Morgantown, WV on November 2, 2000.

Randolph L. Kesling,

Director, Acquisition and Assistance Division.

[FR Doc. 00–28975 Filed 11–9–00; 8:45 am]

BILLING CODE 6450–01–P

DEPARTMENT OF ENERGY

Environmental Management Site-Specific Advisory Board, Pantex

AGENCY: Department of Energy.

ACTION: Notice of open meeting.

SUMMARY: This notice announces a meeting of the Environmental Management Site-Specific Advisory Board (EM SSAB), Pantex. The Federal Advisory Committee Act (Pub. L. No. 92–463, 86 Stat. 770) requires that public notice of these meetings be announced in the **Federal Register**.

DATES: Tuesday, November 28, 2000, 10:00 a.m.–2:30 p.m.

ADDRESSES: Radisson Inn of Amarillo, East Wing Ballroom, I–40 & Lakeside, Amarillo, Texas 79108.

FOR FURTHER INFORMATION CONTACT: Jerry S. Johnson, Assistant Area Manager, Department of Energy, Amarillo Area Office, P.O. Box 30030, Amarillo, TX 79120; phone (806) 477–3125; fax (806) 477–5896 or e-mail *jjohnson@pantex.gov.*

SUPPLEMENTARY INFORMATION:

Purpose of the Board: The purpose of the Board is to make recommendations to DOE and its regulators in the areas of environmental restoration, waste management and related activities.

Tentative Agenda:

10:00 Agenda Review/Approval of Minutes
10:15 Co-Chair Comments
10:30 Task Force/Subcommittee Reports
11:00 Ex-Officio Reports
11:15 Updates—Occurrence Reports—DOE
11:45 Break for Lunch
12:45 Presentation (to be announced)
2:00 Questions
2:20 Public Questions/Comments
2:30 Adjourn

Public Participation: The meeting is open to the public. Written statements may be filed with the Committee either before or after the meeting. Individuals who wish to make oral statements pertaining to agenda items should contact Jerry Johnson's office at the address or telephone number listed above. Requests must be received five days prior to the meeting and every reasonable provision will be made to accommodate the request in the agenda. The Deputy Designated Federal Officer is empowered to conduct the meeting in a fashion that will facilitate the orderly conduct of business. Each individual wishing to make public comment will be provided a maximum of five minutes to present their comments.

Minutes: Minutes of this meeting will be available for public review and copying at the Pantex Public Reading Rooms located at the Amarillo College Lynn Library and Learning Center, 2201 South Washington, Amarillo, TX phone (806) 371–5400. Hours of operation are from 7:45 a.m. to 10:00 p.m. Monday through Thursday; 7:45 a.m. to 5:00 p.m. on Friday; 8:30 a.m. to 12:00 noon on Saturday; and 2:00 p.m. to 6:00 p.m. on Sunday, except for Federal holidays. Additionally, there is a Public Reading Room located at the Carson County Public Library, 401 Main Street, Panhandle, TX phone (806) 537–3742. Hours of operation are from 9:00 a.m. to 7:00 p.m. on Monday; 9:00 a.m. to 5:00 p.m. Tuesday through Friday; and closed Saturday and Sunday as well as Federal holidays. Minutes will also be available by writing or calling Jerry S. Johnson at the address or telephone number listed above.

Issued at Washington, DC on November 7, 2000.

Rachel M. Samuel,

Deputy Advisory Committee Management Officer.

[FR Doc. 00–28978 Filed 11–9–00; 8:45 am]

BILLING CODE 6450–01–P

DEPARTMENT OF ENERGY

Hydrogen Technical Advisory Panel; Open Meeting

AGENCY: Department of Energy.

ACTION: Notice of open meeting.

SUMMARY: This notice announces a meeting of the Hydrogen Technical Advisory Panel. Federal Advisory Committee Act (Pub. L. 92–463, 86 Stat. 770, as amended), requires that public notice of these meetings be announced in the **Federal Register**.

DATES: Tuesday, November 14, 2000, 8:30 a.m.–5:45 p.m.

Wednesday, November 15, 2000, 8:30 a.m.–12:30 p.m.

ADDRESSES: Sunline Transit Authority, 32–505 Harry Oliver Trail, Thousand Palms, California 92296. Telephone: 760–343–3456.

FOR FURTHER INFORMATION CONTACT: Neil Rossmeissl, Designated Federal Officer, Hydrogen Program Manager, EE–15, Office of Power Technologies, Department of Energy, Washington, DC 20585; Telephone: 202–586–8668.

SUPPLEMENTARY INFORMATION:

Purpose of the Meeting

The major purpose of this meeting will be to hold a discussion on Local, State, and Federal Governments role in supporting and encouraging the transition to hydrogen energy systems.

Other topics included are: (1) Reauthorization of the Hydrogen Future Act, (2) California Air Resources Board (CARB) regulating situation, (3) report on the Las Vegas Blueprint Workshop, (4) report on the BP Amoco Workshop on Fuel Cell Vehicle Infrastructure, (5) report on Vision 21.

Tuesday, November 14, 2000

8:30 a.m.: Introduction and Opening Comments—D. Nahmias
8:40: HTAP Committee Reports:
—Coordination—H. Chum
—Scenario Planning— H. Wedda
—Fuel Choice—R. Nichols
9:10: State of California—Hydrogen Activities—Today and Tomorrow
—Reauthorization of the Hydrogen Future Act—H. Chum
—Keynote Address—K. Calvert (invited)
—California Air Resources Board—A. Lloyd
—California Energy Commission—D. Rohy
10:10: Break
10:20: Programs and Coordination Activities—Transportation:
—California Fuel Cell Partnership—J. Wallace (invited)
—Las Vegas Blueprint Meeting Report—C. Hammil
—Sunline Update—R. Cromwell
—BP Amoco Workshop Report—J. Rinker
12:00 p.m.: Lunch
1:00: DOE Program Report—S. Gronich
2:00: Systems Analysis Report—M. Mann
2:45: Vision 21: Perspectives and Prospects—H. Chambers
3:45: Break
4:00: Public Comments (5 minutes maximum per speaker) Audience
4:45: HTAP Deliberations
5:45: Adjourn

Wednesday, November 15, 2000

8:30 a.m.: HYFORUM Report:
—Conference Overview—D. Nahmias
—Hydrogen Across the Federal Government—H. Chum
9:30: Hydrogen Safety Documentary—W. Hoagland, S. Leach
10:00: Break
10:15: Aspen Clean Energy Roundtable—C. Gregorie Padro
11:00: Public Comments
11:30: HTAP Deliberations
12:30 p.m.: Adjourn

Public Participation: This meeting is open to the public. Written statements may be filed with the Committee either before or after the meeting. Individuals who wish to make oral statements pertaining to agenda items should contact Mr. Neil Rossmeissl's office at the address or telephone number listed above. Requests must be received 5 days prior to the meeting and reasonable provision will be made to include the presentations in the agenda. The Designated Federal Officer is empowered to conduct the meeting in a fashion that will facilitate the orderly conduct of business. Each individual wishing to make public comment will be provided a maximum of 5 minutes to present their comments. This notice is being published less than 15 days before the date of the meeting due to programmatic issues that needed to be resolved prior to publication.

Minutes: The minutes of this meeting will be available for public review and copying at the Freedom of Information Public Reading Room, 1E–190, Forrestal Building, 1000 Independence Avenue, S.W. Washington, DC 20585 between 9:00 A.M. and 4:00 P.M., Monday through Friday, except Federal Holidays. Minutes will also be available by writing to Neil Rossmeissl, Department of Energy, 1000 Independence Avenue, SW., Washington, DC 20585, or by calling (202) 586–8668.

Issued at Washington, DC on November 6, 2000.

Rachel Samuel,

Deputy Advisory Committee Management Officer.

[FR Doc. 00–28976 Filed 11–9–00; 8:45 am]

BILLING CODE 6450–01–P

DEPARTMENT OF ENERGY

International Energy Agency Meeting

AGENCY: Department of Energy.

ACTION: Notice of meeting.

SUMMARY: Subject to timely enactment of legislation to reinstate the antitrust defense under section 252 of the Energy Policy and Conservation Act, a meeting of the Industry Advisory Board to the International Energy Agency (IEA) will be held on November 14, 2000, at the headquarters of the IEA in Paris, France in connection with a joint meeting of the IEA's Standing Group on Emergency Questions and Standing Group on Oil Markets.

FOR FURTHER INFORMATION CONTACT: Samuel M. Bradley, Assistant General Counsel for International and National Security Programs, Department of Energy, 1000 Independence Avenue, SW., Washington, DC 20585, 202–586–6738.

SUPPLEMENTARY INFORMATION: Subject to timely enactment of legislation to reinstate the antitrust defense under section 252 of the Energy Policy and Conservation Act (EPCA), the following meeting notice is provided, in accordance with section 252(c)(1)(A)(i) of the EPCA (42 U.S.C. 6272(c)(1)(A)(i)):

A meeting of the Industry Advisory Board (IAB) to the International Energy Agency (IEA) will be held at the headquarters of the IEA, 9, rue de la Federation, Paris, France, on November 14, 2000, beginning at approximately 9 a.m. The purpose of this notice is to permit attendance by representatives of U.S. company members of the IAB at a joint meeting of the IEA's Standing Group on Emergency Questions (SEQ) and the Standing Group on Oil Markets (SOM), which is scheduled to be held at the IEA on November 14 beginning at 2:30 p.m., including a preparatory encounter among company representatives on November 14 from approximately 9:00 a.m. to 9:15 a.m.

The Agenda for the preparatory encounter among company representatives is to elicit views regarding items on the SEQ/SOM's Agenda. The Agenda for the SEQ/SOM meeting is under the control of the SEQ/SOM. It is expected that the SEQ/SOM will follow the following:

Agenda

1. Current Oil Market Situation
2. Market Psychology: A Trader's Perspective
3. Heating Oil Situation and Possible Responses
   —Report on Results of Special Statistical Survey
   —Discussion on Possible IEA Response
4. Current Situation with Independent Storage

As provided in section 252(c)(1)(A)(ii) of the Energy Policy and Conservation Act (42 U.S.C. 6272(c)(1)(A)(ii)), this meeting is open only to representatives of members of the IAB and their counsel, representatives of members of the SEQ, representatives of the Departments of Energy, Justice, and State, the Federal Trade Commission, the General Accounting Office, Committees of Congress, the IEA, and the European Commission, and invitees of the IAB, the SEQ, or the IEA.

Issued in Washington, D.C., November 7, 2000.

Eric J. Fygi,

Acting General Counsel.

[FR Doc. 00–29068 Filed 11–9–00; 8:45 am]

BILLING CODE 6450–01–P

DEPARTMENT OF ENERGY

State Energy Advisory Board; Meeting

Office of Energy Efficiency and Renewable Energy

AGENCY: Department of Energy.

ACTION: Notice of open meeting.

SUMMARY: This notice announces a meeting of the State Energy Advisory Board (STEAB). Federal Advisory Committee Act (Public Law No. 92–463; 86 Stat. 770) requires that public notice be announced in the **Federal Register**.

DATES: November 30, 2000 from 8:00 AM to 5:00 PM, and December 1, 2000 from 8 a.m. to 1 p.m.

Place: Marriott at Metro Center, 775 12th Street, NW., Washington, DC 20005, Phone: 202/737–2200.

FOR FURTHER INFORMATION CONTACT: William J. Raup, Office of Building Technology, State, and Community Programs, Energy Efficiency and Renewable Energy, U.S. Department of Energy (DOE), Washington, DC 20585, Telephone 202/586–2214.

SUPPLEMENTARY INFORMATION:

Purpose of the Board: To make recommendations to the Assistant Secretary for Energy Efficiency and Renewable Energy regarding goals and objectives and programmatic and administrative policies, and to otherwise carry out the Board's responsibilities as designated in the State Energy Efficiency Programs Improvement Act of 1990 (Public Law 101–440).

Tentative Agenda:

- Joint meeting between incoming and outgoing Board, introduction of new members.
- Discussions with Energy Efficiency and Renewable Energy Deputy Assistant Secretaries.
- Energy Policy Discussion.
- National Lab Presentation.
- Review of STEAB contract support.
- STEAB Committee updates.

Public Participation: The meeting is open to the public. Written statements may be filed with the Board either before or after the meeting. Members of the public who wish to make oral statements pertaining to agenda items should contact William J. Raup at the address or telephone number listed above. Requests to make oral presentations must be received five days prior to the meeting; reasonable provision will be made to include the statements in the agenda. The Chair of the Board is empowered to conduct the meeting in a fashion that will facilitate the orderly conduct of business.

Minutes: The minutes of the meeting will be available for public review and copying within 30 days at the Freedom of Information Public Reading Room, 1E–190, Forrestal Building, 1000 Independence Avenue, SW., Washington, DC, between 9 a.m. and 4 p.m., Monday through Friday, except Federal holidays.

Issued at Washington, DC, on November 6, 2000.

Rachel Samuel,

Deputy Advisory Committee Management Officer.

[FR Doc. 00–28977 Filed 11–9–00; 8:45 am]

BILLING CODE 6450–01–P

DEPARTMENT OF ENERGY

Federal Energy Regulatory Commission

[Docket No. RP00–267–002]

ANR Pipeline Company; Notice of Proposed Change in FERC Gas Tariff

November 6, 2000.

Take notice that on October 31, 2000, ANR Pipeline Company (ANR) tendered for filing as part of FERC Gas Tariff, Second Revised Volume No. 1, the following revised tariff sheet to be effective November 1, 2000.

Substitute Twenty-Eighth Revised Sheet No. 17

ANR states that the filing is being filed in compliance with the Commission's order dated May 31, 2000 at Docket No. RP00–267–000, See ANR Pipeline Company, 91 FERC ¶61,195. The Commission's order approved but suspended the effective date of ANR's proposed cashout price surchange from June 1, 2000 until November 1, 2000.

Any person desiring to protest said filing should file a protest with the Federal Energy Regulatory Commission, 888 First Street, NE., Washington, DC 20426, in accordance with section 385.211 of the Commission's Rules and Regulations. All such protests must be filed in accordance with section 154.210 of the Commission's Regulations. Protests will be considered by the Commission in determining the appropriate action to be taken, but will not serve to make protestants parties to the proceedings. Copies of this filing are on file with the Commission and are available for public inspection in the Public Reference Room. This filing may be viewed on the web at http://www.ferc.fed.us/online/rims.htm (call 202–208–2222 for assistance). Comments and protests may be filed electronically via the internet in lieu of paper. See, 18 CFR 385.2001(a)(1)(iii) and the instructions on the Commission's web site at http://www.ferc.fed.us/efi/doorbell.htm.

David P. Boergers,

Secretary.

[FR Doc. 00–28939 Filed 11–9–00; 8:45 am]

BILLING CODE 6717–01–M

DEPARTMENT OF ENERGY

Federal Energy Regulatory Commission

[Docket No. RP96–383–014]

Dominion Transmission, Inc.; Notice of Negotiated Rate

November 6, 2000.

Take notice that on October 31, 2000, Dominion Transmission, Inc. (DTI) tendered for filing the following tariff sheets for disclosure of a recently negotiated transaction with Central Hudson Enterprises Corporation, with an effective date of November 1, 2000, for the agreement:

Third Revised Sheet No. 1300
First Revised Sheet No. 1406
Original Sheet No. 1407

DTI states that the transaction includes a negotiated rate. Further, because the transaction includes a provision that may be a material deviation from the form of service agreement included in DTI's tariff, DTI has also filed the letter agreement between the parties.

DTI states that copies of the filing have been served on all parties on the official service list, DTI's customers, and interested state commissions.

Any person desiring to be heard or to protest said filing should file a motion to intervene or a protest with the Federal Energy Regulatory Commission, 888 First Street, NE., Washington, DC 20426, in accordance with sections 385.214 or 385.211 of the Commission's Rules and Regulations. All such motions or protests must be filed in accordance with Section 154.210 of the Commission's Regulations. Protests will be considered by the Commission in determining the appropriate action to be taken, but will not serve to make protestants parties to the proceedings. Any person wishing to become a party must file a motion to intervene. Copies of this filing are on file with the Commission and are available for public

inspection in the Public Reference Room. This filing may be viewed on the web at http://www.ferc.fed.us/online/rims.htm (call 202–208–2222 for assistance). Comments and protests may be filed electronically via the internet in lieu of paper. See, 18 CFR 385.2001(a)(1)(iii) and the instructions on the Commission's web site at *http://www.ferc.fed.us/efi/doorbell.htm.*

David P. Boergers,

Secretary.

[FR Doc. 00–28930 Filed 11–9–00; 8:45 am]

BILLING CODE 6717–01–M

DEPARTMENT OF ENERGY

Federal Energy Regulatory Commission

[Docket Nos. RP01–74–000 and RP97–406–025

Dominion Transmission, Inc.; Notice of Proposed Changes in FERC Gas Tariff

November 6, 2000.

Take notice that on November 1, 2000, Dominion Transmission, Inc. (DTI), tendered for filing to be part of its FERC Gas Tariff, Third Revised Volume No. 1, the revised tariff sheets listed below in order to implement fully unbundled gathering and extraction rates, and to reflect the effects of that unbundling on transportation service rates.

Third Revised Sheet No. 31
Third Revised Sheet No. 32
Second Revised Sheet No. 33
Third Revised Sheet No. 34
Third Revised Sheet No. 35
Second Revised Sheet No. 37
First Revised Sheet No. 152
First Revised Sheet No. 153
First Revised Sheet No. 202
First Revised Sheet No. 203
First Revised Sheet No. 251
First Revised Sheet No. 252
First Revised Sheet No. 253
First Revised Sheet No. 1098
First Revised Sheet No. 1118
First Revised Sheet No. 1121
First Revised Sheet No. 1122
First Revised Sheet No. 1140
First Revised Sheet No. 1141
First Revised Sheet No. 1142

As required by the Commission's October 2, 2000 Order in Docket No. RP97–406, DTI filed cost-based gathering and products extraction rates in the format required by section 154.301 to 154.314 of the Commission's regulations. The rates are based on cost-of-service data reflecting a base period of the twelve months ended August 31, 2000, adjusted for certain changes that are known and measurable with reasonable accuracy and will occur during the nine months following the end of the base period. The fully unbundled rates and the tariff sheets implementing those rates are to become effective January 1, 2001.

DTI states that copies of its filing have been served on its customers and interested state commissions.

Any person desiring to be heard or to protest said filing should file a motion to intervene or a protest with the Federal Energy Regulatory Commission, 888 First Street, NE., Washington, DC 20426, in accordance with sections 385.214 or 385.211 of the Commission's Rules and Regulations. All such motions or protests must be filed in accordance with section 154.210 of the Commission's Regulations. Protests will be considered by the Commission in determining the appropriate action to be taken, but will not serve to make protestants parties to the proceedings. Any person wishing to become a party must file a motion to intervene. Copies of this filing are on file with the Commission and are available for public inspection in the Public Reference Room. This filing may be viewed on the web at http://www.ferc.fed.us/online/rims/htm (call 202–208–2222 for assistance). Comments and protests may be filed electronically via the internet in lieu of paper. See, 18 CFR 385.2001(a)(1)(iii) and the instructions on the Commission's web site at http://www.ferc.fed.us/efi/doorbell.htm.

David P. Boergers,

Secretary.

[FR Doc. 00–28943 Filed 11–9–00; 8:45 am]

BILLING CODE 6717–01–M

DEPARTMENT OF ENERGY

Federal Energy Regulatory Commission

[Docket No. CP00–51–003]

East Tennessee Natural Gas Company; Notice of Amendment

November 6, 2000.

Take notice that on October 27, 2000, East Tennessee Natural Gas Company (East Tennessee), Post Office Box 1642, Houston, Texas 77251–1642, filed a petition with the Commission in Docket No. CP00–51–003 to amend the Commission order issued in Docket Nos. CP00–51–000 and CP00–51–001,[1] pursuant to section 7(c) of the Natural Gas Act (NGA), to vacate, in part, authorization granted to construct, install, and operate various pipeline facilities as part of its Rocky Top Expansion Project and to revise the directed incremental transportation rate from $10.201 per Dekatherm of natural gas to $8.780 per Dekatherm, all as more fully set forth in the amendment which is open to the public for inspection.

East Tennessee states that it no longer needs to undertake the following activities at the following facilities because of changes in market conditions:

(1) Increase the horsepower of three existing Solar Saturn turbine compressor units at Compressor Station 3101 near Ridgetop, Robertson County, Tennessee;

(2) Uprate 4.56 miles of 22-inch diameter pipeline between Mainline Value (MLV) 3107–1, Overton County, Tennessee, and MLV 3107–1A in Overton County, Tennessee;

(3) Uprate 12.85 miles of 22-inch diameter pipeline between MLV 3107–1A, in Overton County, Tennessee, to MLV 3108–1 in Overton County, Tennessee;

(4) Uprate the dual 10-inch Tennessee River pipeline crossings and relocate MLV 3213–1A1 and MLV 3213–1A2 assemblies within 200 feet west of their existing locations at Mile Post 3.19 in Hamilton County, Tennessee;

(5) Uprate by hydrotesting the existing Chattanooga North, Red Bank, Chattanooga East, and Chattanooga Volunteer Ordinance meter stations on the 3200 Line in Hamilton County, Tennessee;

(6) Install new bidirectional metering facilities near MLV Site 3108–1 at the existing Citizens Meter Station in Morgan County, Tennessee; and,

(7) Uprate Value Section 3105–1 from Mile Post 11.20 to Mile Post 13.57 at Cumberland River in Jackson County, Tennessee.

East Tennessee states that the revised cost estimate for the proposed additions, modifications, and testing is $18,129,000, rather than the original cost estimate of $21,162,000 for the new facilities. Consequently, East Tennessee proposes a revised initial incremental transportation rate to reflect the reduced scope of the facilities to be constructed as part of the Rocky Top Expansion Project. Instead of the directed incremental transportation rate of $10.201 per Dekatherm of natural gas, East Tennessee now proposes to charge an incremental transportation rate of $8.780 per Dekatherm of natural gas under East Tennessee's Rate Schedule FT–A.

The project is more fully set forth in the application on file with the Commission and open for public inspection. The application may be viewed on the web at www.ferc.fed.us/

[1] 92 FERC ¶ 61,165 (2000).

online/rims.htm (call [202] 208–2222 for assistance).

Any questions regarding this application should be directed to Steven E. Tillman, Director of Regulatory Affairs, East Tennessee Natural Gas Company, P.O. Box 1642, Houston, Texas 77251–1642; telephone number (713) 627–5113.

Any person desiring to participate in the hearing process or to make any protest with reference to said application should on or before November 27, 2000, file with the Federal Energy Regulatory Commission, 888 First Street, NE., Washington, DC 20426, a motion to intervene or a protest in accordance with the requirements of the Commission's rules and procedure (18 CFR 385.214 or 385.211) and the Regulations under the Natural Gas Act (18 CFR 157.10). All protests filed with the Commission will be considered by it in determining the appropriate action to be taken, but will not serve to make protestants parties to the proceedings. Any person wishing to become a party to a proceeding or to participate as a party in any hearing therein must file a motion to intervene in accordance with the Commission's rules. Comments and protests may be filed electronically via the internet in lieu of paper. See, 18 CFR 385.2001(a)(1)(iii) and the instructions on the Commission's web site at http://www.ferc.fed.us/efi/doorbell.htm.

A person obtaining intervenor status will be placed on the service list maintained by the Secretary of the Commission and will receive copies of all documents filed by the applicant and by every one of the intervenors. An intervenor can file for rehearing of any Commission order and can petition for court review of any such order. However, an intervenor must submit copies of comments or any other filing it makes with the Commission to every other inventor in the proceeding, as well as 14 copies with the Commission.

A person does not have to intervene, however, in order to have comments considered. A person, instead, may submit two copies of comments to the Secretary of the Commission. Commenters will be placed on the Commission's environmental mailing list, will receive copies of environmental documents and will be able to participate in meetings associated with the Commission's environmental review process. Commenters will not be required to serve copies of filed documents on all other parties. However, commenters will not receive copies of all documents filed by other parties or issued by the Commission and will not have the right to seek rehearing or appeal the Commission's final order to a federal court.

The commission will consider all comments and concerns equally, whether filed by commenters or those requesting intervenor status.

Take further notice that, pursuant to the authority contained in and subject to the jurisdiction conferred upon the Federal Energy Regulatory Commission by sections 7 and 15 of the Natural Gas Act and Commission's rules of practice and procedure, a hearing will be held without further notice before the Commission or its designee on this application if no motion to intervene is filed within the time required herein, if the Commission on its own review of the matter finds that a grant of the certificate is required by the public convenience and necessity. If a motion for leave to intervene is timely filed, or if the Commission on its own motion believes that a formal hearing is required, further notice of such hearing will be duly given.

Under the procedure herein provided for, unless otherwise advised, it will be unnecessary for East Tennessee to appear or be represented at the hearing.

David P. Boergers,

Secretary.

[FR Doc. 00–28923 Filed 11–9–00; 8:45 am]

BILLING CODE 6717–01–M

DEPARTMENT OF ENERGY

Federal Energy Regulatory Commission

[Docket No. RP00–534–001]

East Tennessee Natural Gas Company; Notice of Proposed Changes in FERC Gas Tariff

November 6, 2000.

Take notice that on November 1, 2000, East Tennessee Natural Gas Company (East Tennessee) tendered for filing as part of its FERC Gas Tariff, Second Revised Volume No. 1, the following tariff sheets to be effective November 2, 2000:

Eighteenth Revised Sheet No. 4

East Tennessee states that this filing is in compliance with the Commission's October 4, 2000 Letter Order in the above-referenced docket, which required East Tennessee to file a revised Sheet No. 4 to present the currently effective rates.

East Tennessee states that copies of its filing have been mailed to all affected customers and interested state commissions.

Any person desiring to protest said filing should file a protest with the Federal Energy Regulatory Commission, 888 First Street, NE., Washington, DC 20426, in accordance with section 385.211 of the Commission's Rules and Regulations. All such protests must be filed in accordance with Section 154.210 of the Commission's Regulations. Protests will be considered by the Commission in determing the appropriate action to be taken, but will not serve to make protestants parties to the proceedings. Copies of this filing are on file with the Commission and are available for public inspection in the Public Reference Room. This filing may be viewed on the web at http://www.ferc.fed.us/online/rims.htm (call 202–208–2222 for assistance). Comments and protests may be filed electronically via the internet in lieu of paper. See, 18 CFR 385.2001(a)(1)(iii) and the instructions on the Commission's web site at http://www.ferc.fed.us/efi/doorbell.htm.

David P. Boergers,

Secretary.

[FR Doc. 00–28942 Filed 11–9–00; 8:45 am]

BILLING CODE 6717–01–M

DEPARTMENT OF ENERGY

Federal Energy Regulatory Commission

[Docket No. RP97–346–028]

Equitrans, L.P.; Notice of Gathering Surcharge Report

November 6, 2000.

Take notice that on November 1, 2000, Equitrans, L.P. (Equitrans) submitted its stranded gathering surcharge report pursuant to Article IV of the Stipulation and Agreement (Stipulation) filed on January 22, 1999 and amended on March 31, 1999 in the above reference dockets.

Equitrans the purpose of this filing is for Equitrans to report its reconciliation of the amount collected during the surcharge period for standard gathering and the amount Equitrans was authorized to collect under the Stipulation.

Equitrans states that the total net amount collected, including interest, resulted in an under-recovery of $3,501.34. Because of the small amount of the under-recovery, Equitrans states that it is waiving its right to collect the under-recovery and will not direct bill its firm transportation customers for that amount.

Any person desiring to protest said filing should file a protest with the

Federal Energy Regulatory Commission, 888 First Street, NE., Washington, DC 20426, in accordance with section 385.211 of the Commission's Rules and Regulations. All such protests must be filed on or before November 13, 2000. Protests will be considered by the Commission in determining the appropriate action to be taken, but will not serve to make protestants parties to the proceedings. Copies of this filing are on file with the Commission and are available for public inspection in the Public Reference Room. This filing may be viewed on the web at http://www.ferc.fed.us/online/rims.htm (call 202–208–2222 for assistance). Comments and protests may be filed electronically via the internet in lieu of paper. See, 18 CFR 385.2001(a)(1)(iii) and the instructions on the Commission's web site at http://www.ferc.fed.us/efi/doorbell.htm.

David P. Boergers,

Secretary.

[FR Doc. 00–28931 Filed 11–9–00; 8:45 am]

BILLING CODE 6717–01–M

DEPARTMENT OF ENERGY

Federal Energy Regulatory Commission

[Docket No. RP99–220–006]

Great Lakes Gas Transmission Limited Partnership; Notice of Negotiated Rate Agreement

November 6, 2000.

Take notice that on October 31, 2000, Great Lakes Gas Transmission Limited Partnership (Great Lakes) filed for disclosure, a transportation service agreement pursuant to Great Lakes' Rate Schedule FT entered into by Great Lakes and CXY Energy Marketing (U.S.A.) Inc. (CXY) (FT Service Agreement). The FT Service Agreement being filed reflects a negotiated rate arrangement between Great Lakes and CXY commencing November 1, 2000.

Great Lakes states that the FT Service Agreement is being filed to implement a negotiated rate contract as required by both Great Lakes' negotiated rate tariff provisions and the Commission's Statement of Policy on Alternatives to Traditional Cost-of-Service Ratemaking for Natural Gas Pipelines and Regulation of Negotiated Transportation Services of Natural Gas Pipelines, issued January 31, 1996, at Docket Nos. RM95–6–000 and RM96–7–000.

Any person desiring to be heard or to protest said filing should file a motion to intervene or a protest with the Federal Energy Regulatory Commission, 888 First Street, NE., Washington, DC 20426, in accordance with sections 385.214 or 385.211 of the Commission's Rules and Regulations. All such motions or protests must be filed in accordance with section 154.210 of the Commission's Regulations. Protests will be considered by the Commission in determining the appropriate action to be taken, but will not serve to make protestants parties to the proceedings. Any person wishing to become a party must file a motion to intervene. Copies of this filing are on file with the Commission and are available for public inspection in the Public Reference Room. This filing may be viewed on the web at http://www.ferc.fed.us/online/rims.htm (call 202–208–2222 for assistance). Comments and protests may be filed electronically via the internet in lieu of paper. See, 18 CFR 385.2001(a)(1)(iii) and the instructions on the Commission's web site at http://www.ferc.fed.us/efi/doorbell.htm.

David P. Boergers,

Secretary.

[FR Doc. 00–28934 Filed 11–9–00; 8:45 am]

BILLING CODE 6717–01–M

DEPARTMENT OF ENERGY

Federal Energy Regulatory Commission

[Docket No. RP98–18–005]

Iroquois Gas Transmission System, L.P.; Notice of Proposed Changes in FERC Gas Tariff

November 6, 2000.

Take notice that on November 1, 2000, Iroquois Gas Transmission System, L.P. tendered for filing as part of its FERC Gas Tariff, First Revised Volume No. 1, Third Revised Sheet No. 6. Iroquois requests that the Commission approve the tariff sheet effective November 1, 2000.

Iroquois states that the revised tariff sheets reflect a negotiated rate between Iroquois and Duke Energy Trading and Marketing, LLC for transportation under Rate Schedule RTS beginning on November 1, 2000 through April 1, 2001.

Iroquois states that copies of its filing were served on all jurisdictional customers and interested state regulatory agencies and all parties to the proceeding.

Any person desiring to be heard or to protest said filing should file a motion to intervene or a protest with the Federal Energy Regulatory Commission, 888 First Street, NE., Washington, DC 20426, in accordance with sections 385.214 or 385.211 of the Commission's Rules and Regulations. All such motions or protests must be filed in accordance with section 154.210 of the Commission's Regulations. Protests will be considered by the Commission in determining the appropriate action to be taken, but will not serve to make protestants parties to the proceedings. Any person wishing to become a party must file a motion to intervene. Copies of this filing are on file with the Commission and are available for public inspection in the Public Reference Room. This filing may be viewed on the web at http://www.ferc.fed.us/online/rims.htm (call 202–208–2222 for assistance). Comments and protests may be filed electronically via the internet in lieu of paper. See, 18 CFR 385.2001(a)(1)(iii) and the instructions on the Commission's web site at http://www.ferc.fed.us/efi/doorbell.htm.

David P. Boergers,

Secretary.

[FR Doc. 00–28932 Filed 11–9–00; 8:45 am]

BILLING CODE 6717–01–M

DEPARTMENT OF ENERGY

Federal Energy Regulatory Commission

[Docket No. RP00–177–001]

Maritimes & Northeast Pipeline, L.L.C.; Notice of Proposed Changes in FERC Gas Tariff

November 6, 2000.

Take notice that on October 31, 2000, Maritimes & Northeast Pipeline, L.L.C. (Maritimes) tendered for filing to become part of its FERC Gas Tariff, First Revised Volume No. 1, the following tariff sheet, to become effective on November 1, 2000.

Second Revised Sheet No. 9

Maritimes states that it is filing the above tariff sheet to reflect the expiration of existing negotiated rate contracts.

Any person desiring to be heard or to protest said filing should file a motion to intervene or a protest with the Federal Energy Regulatory Commission, 888 First Street, NE, Washington, DC 20426, in accordance with sections 385.214 or 385.211 of the Commission's Rules and Regulations. All such motions or protests must be filed in accordance with Section 154.210 of the Commission's Regulations. Protests will be considered by the Commission in determining the appropriate action to be taken, but will not serve to make protestants parties to the proceedings.

Any person wishing to become a party must file a motion to intervene. Copies of this filing are on file with the Commission and are available for public inspection in the Public Reference Room. This filing may be viewed on the web at http://www.ferc.fed.us/online/rims.htm (call 202–208–2222 for assistance). Comments and protests may be filed electronically via the internet in lieu of paper. See, 18 CFR 385.2001(a)(1)(iii) and the instructions on the Commission's web site at http://www.ferc.fed.us/efi/doorbell.htm.

David P. Boergers,

Secretary.

[FR Doc. 00–28936 Filed 11–9–00; 8:45 am]

BILLING CODE 6717–01–M

DEPARTMENT OF ENERGY

Federal Energy Regulatory Commission

[Docket No. RP99–176–021]

Natural Gas Pipeline Company of America; Notice of Proposed Change in FERC Gas Tariff

November 6, 2000.

Take notice that on October 31, 2000, Natural Gas Pipeline Company of America (Natural) tendered for filing to be a part of its FERC Gas Tariff, Sixth Revised Volume No. 1, Original Sheet No. 26L, 26M and 26N, to be effective November 1, 2000.

Natural states that the purpose of this filing is to implement three (3) negotiated rate transactions with Laclede Gas Company and Central Illinois Light Company under Natural's Rate Schedule FTS pursuant to Section 49 of the General Terms and Conditions of Natural's Tariff.

Natural states that copies of the filing are being mailed to its customers, interested state commissions and all parties set out on the Commission's official service list in Docket No. RP99–176.

Any person desiring to be heard or to protest said filing should file a motion to intervene or a protest with the Federal Energy Regulatory Commission, 888 First Street, NE., Washington, DC 20426, in accordance with sections 385.214 or 385.211 of the Commission's Rules and Regulations. All such motions or protests must be filed in accordance with section 154.210 of the Commission's Regulations. protests will be considered by the Commission in determining the appropriate action to be taken, but will not serve to make protestants parties to the proceedings. Any person wishing to become a party must file a motion to intervene. Copies of this filing are on file with the Commission and are available for public inspection in the Public Reference Room. This filing may be viewed on the web at http://www.ferc.fed.us/online/rims.htm (call 202–208–2222 for assistance). Comments and protests may be filed electronically via the internet in lieu of paper. See, 187 CFR 385.2001(a)(1)(iii) and the instructions on the Commission's web site at http://www.ferc.fed.us/efi/doorbell.htm.

David P. Boergers,

Secretary.

[FR Doc. 00–28933 Filed 11–9–00; 8:45 am]

BILLING CODE 6717–01–M

DEPARTMENT OF ENERGY

Federal Energy Regulatory Commission

[Docket No. ER00–3577–000]

New England Power Pool; Notice of Filing

November 6, 2000.

Take notice that on November 2, 2000, the New England Power Pool (NEPOOL) Participants Committee submitted in the above-captioned docket supplemental information relating to its August 31, 2000 filing of the Sixty-Fourth Agreement Amending New England Power Pool Agreement (the Sixty-Fourth Agreement), which proposed the elimination of In Service. This supplemental information clarifies the purpose and intended effect on the Sixty-Fourth Agreement.

The NEPOOL Participants Committee has requested an effective date of December 1, 2000.

The NEPOOL Participants Committee states that copies of these materials were sent to all persons identified on the service list in the above-captioned docket, the NEPOOL Participants, the Non-Participant Transmission Customers and the six New England state governors and regulatory commissions.

Any person desiring to be heard or to protest such filing should file a motion to intervene or protest with the Federal Energy Regulatory Commission, 888 First Street, NE., Washington, DC 20426, in accordance with Rules 211 and 214 of the Commission's rules of practice and procedure (18 CFR 385.211 and 385.214). All such motions and protests should be filed on or before November 14, 2000. Protests will be considered by the Commission to determine the appropriate action to be taken, but will not serve to make protestants parties to the proceedings. Any person wishing to become a party must file a motion to intervene. Copies of this filing are on file with the Commission and are available for public inspection. This filing may also be viewed on the Internet at http://www.ferc.fed.us/online/rims.htm (call 202–208–2222 for assistance). Comments and protests may be filed electronically via the internet in lieu of paper. See, 18 CFR 385.2001(a)(1)(iii) and the instructions on the Commission's web site at *http://www.ferc.fed.us/efi/doorbell.htm.*

David P. Boergers,

Secretary.

[FR Doc. 00–28922 Filed 11–9–00; 8:45 am]

BILLING CODE 6717–01–M

DEPARTMENT OF ENERGY

Federal Energy Regulatory Commission

[Docket No. RP96–272–018]

Northern Natural Gas Company; Notice of Proposed Changes in FERC Gas Tariff

November 6, 2000.

Take notice that on October 30, 2000, Northern Natural Gas Company (Northern) tendered for filing to become part of Northern's FERC Gas Tariff, Fifth Revised Volume No. 1, the following tariff sheets, proposed to become effective on October 31, 2000.

Tenth Revised Sheet No. 66
Fifth Revised Sheet No. 66C

Northern states that the above sheets are being filed to implement a specific negotiated rate transaction with UtiliCorp United, Inc. in accordance with the Commission's Policy Statement on Alternatives to Traditional Cost-of-Service Ratemaking for Natural Gas Pipelines.

Northern further states that copies of the filing have been mailed to each of its customers and interested State Commissions.

Any person desiring to be heard or to protest said filing should file a motion to intervene or a protest with the Federal Energy Regulatory Commission, 888 First Street, NE., Washington, DC 20426, in accordance with §§ 385.214 or 385.211 of the Commission's rules and regulations. All such motions or protests must be filed in accordance with § 154.210 of the Commission's regulations. Protests will be considered by the Commission in determining the appropriate action to be taken, but will not serve to make protestants parties to the proceedings. Any person wishing to become a party must file a motion to

intervene. Copies of this filing are on file with the Commission and are available for public inspection in the Public Reference Room. This filing may be viewed on the web at http://www.ferc.fed.us/online/rims.htm (call 202–208–2222 for assistance). Comments and protests may be filed electronically via the internet in lieu of paper. See, 18 CFR 385.2001(a)(1)(iii) and the instructions on the Commission's web site at http://www.ferc.fed.us/efi/doorbell.htm.

David P. Boergers,

Secretary.

[FR Doc. 00–28925 Filed 11–9–00; 8:45 am]

BILLING CODE 6717–01–M

DEPARTMENT OF ENERGY

Federal Energy Regulatory Commission

[Docket No. RP96–272–019]

Northern Natural Gas Company; Notice of Proposed Changes in FERC Gas Tariff

November 6, 2000.

Take notice that on October 31, 2000, Northern Natural Gas Company (Northern) tendered for filing to become part of Northern's FERC Gas Tariff, Fifth Revised Volume No. 1, the following tariff sheets, proposed to become effective on November 1, 2000:

Eleventh Revised Sheet No. 66
First Revised Sheet No. 66A
First Revised Sheet No. 66B
Sixth Revised Sheet No. 66C

Northern states that the above sheets are being filed to implement a specific negotiated rate transaction with Midwest Natural Gas, Inc. in accordance with the Commission's Policy Statement on Alternatives to Traditional Cost-of-Service Ratemaking for Natural Gas Pipelines. In addition, those negotiated rates that have expired have been deleted.

Northern further states that copies of the filing have been mailed to each of its customers and interested State Commissions.

Any person desiring to be heard or to protest said filing should file a motion to intervene or a protest with the Federal Energy Regulatory Commission, 888 First Street, NE., Washington, DC 20426, in accordance with § 385.214 or § 385.211 of the Commission's rules and regulations. All such motions or protests must be filed in accordance with § 154.210 of the Commission's regulations. Protests will be considered by the Commission in determining the appropriate action to be taken, but will not serve to make protestants parties to the proceedings. Any person wishing to become a party must file a motion to intervene. Copies of this filing are on file with the Commission and are available for public inspection in the Public Reference Room. This filing may be viewed on the web at http://www.ferc.fed.us/online/rims.htm (call 202–208–2222 for assistance). Comments and protests may be filed electronically via the internet in lieu of paper. See, 18 CFR 385.2001(a)(1)(iii) and the instructions on the Commission's web site at http://www.ferc.fed.us/efi/doorbell.htm.

David P. Boergers,

Secretary.

[FR Doc. 00–28926 Filed 11–9–00; 8:45 am]

BILLING CODE 6717–01–M

DEPARTMENT OF ENERGY

Federal Energy Regulatory Commission

[Docket No. RP96–347–020]

Northern Natural Gas Company; Notice of Tariff Filing

November 6, 2000.

Take notice that on October 31, 2000, Northern Natural Gas Company (Northern) tendered for filing to become part of Northern's FERC Gas Tariff, Fifth Revised Volume No. 1, the following tariff sheets to be effective December 1, 2000:

Fourth Revised Sheet No. 263H
Third Revised Sheet No. 263H.1
Alternate Fourth Revised Sheet No. 263H
Alternate Third Revised Sheet No. 263H.1

Northern states that Tariff Sheet Nos. 263H and 263H.1 reflect the Sourcers' flow obligation after the Appendix B customers' election to source or buyout based on the 2000 Carlton Settlement pending before the Commission as well as Northern's current tariff.

Northern states that copies of the filing were served upon Northern's customers and interested State Commissions.

Any person desiring to protest said filing should file a protest with the Federal Energy Regulatory Commission, 888 First Street, NE., Washington, DC 20426, in accordance with section 385.211 of the Commission's Rules and Regulations. All such protests must be filed in accordance with section 154.210 of the Commission's Regulations. Protests will be considered by the Commission in determining the appropriate action to be taken, but will not serve to make protestants parties to the proceedings. Copies of this filing are on file with the Commission and are available for public inspection in the Public Reference Room. This filing may be viewed on the web at http://www.ferc.fed.us/online/rims.htm (call 202–208–2222 for assistance).

Comments and protests may be filed electronically via the internet in lieu of paper. See, 18 CFR 385.2001(a)(1)(iii) and the instructions on the Commission's web site at *http://www.ferc.fed.us/efi/doorbell.htm.*

David P. Boergers,

Secretary.

[FR Doc. 00–28927 Filed 11–9–00; 8:45 am]

BILLING CODE 6717–01–M

DEPARTMENT OF ENERGY

Federal Energy Regulatory Commission

[Docket No. RP96–367–012]

Northwest Pipeline Corporation; Notice of Compliance Filing

November 6, 2000.

Take notice that on October 30, 2000, Northwest Pipeline Corporation (Northwest) tendered for filing as part of its FERC Gas Tariff, Third Revised Volume No. 1, the following tariff sheets, to be effective December 1, 2000:

Thirteenth Revised Sheet No. 8
Tenth Revised Sheet No. 8.1

Northwest states that the purpose of this filing is to implement rate design changes to Northwest's Rate Schedule LS–1, LS–2F, and LS–21 LNG storage services consistent with the Commission's resolution of LNG storage services rate design issues in Northwest's Docket No. RP95–409 and pursuant to the terms of the Commission-approved Settlement in Northwest's Docket No. RP96–367.

Any person desiring to protest said filing should file a protest with the Federal Energy Regulatory Commission, 888 First Street, NE., Washington, DC 20426, in accordance with section 385.211 of the Commission's Rules and Regulations. All such protests must be filed in accordance with section 154.210 of the Commission's Regulations. Protests will be considered by the Commission in determining the appropriate action to be taken, but will not serve to make protestants parties to the proceedings. Copies of this filing are on file with the Commission and are available for public inspection in the Public Reference Room. This filing may be viewed on the web at http://www.ferc.fed.us/online/rims.htm (call 202–208–2222 for assistance).

Comments and protests may be filed electronically via the internet in lieu of paper. See, 18 CFR 385.2001(a)(1)(iii) and the instructions on the Commission's web site at http://www.ferc.fed.us/efi/doorbell.htm.

David P. Boergers,

Secretary.

[FR Doc. 00–28928 Filed 11–9–00; 8:45 am]

BILLING CODE 6717–01–M

DEPARTMENT OF ENERGY

Federal Energy Regulatory Commission

[Docket No. RP99–518–018]

PG&E Gas Transmission, Northwest Corporation; Notice of Proposed Change in FERC Gas Tariff

November 6, 2000.

Take notice that on November 1, 2000, PG&E Gas Transmission, Northwest Corporation (PG&E GTN) tendered for filing as part of its FERC Gas Tariff, First Revised Volume No. 1–A., Twelfth Revised Sheet No. 7 and Fifth Revised Sheet No. 7.01. PG&E GTN requests that the above-referenced tariff sheets become effective November 1, 2000.

PG&E GTN states that these sheets are being filed to reflect the implementation of two negotiated rate agreements.

PG&E GTN further states that a copy of this filing has been served on PG&E GTN's jurisdictional customers and interested state regulatory agencies.

Any person desiring to be heard or to protest said filing should file a motion to intervene or a protest with the Federal Energy Regulatory Commission, 888 First Street, NE., Washington, DC 20426, in accordance with sections 385.214 or 385.211 of the Commission's Rules and Regulations. All such motions or protests must be filed in accordance with section 154.210 of the Commission's Regulations. Protests will be considered by the Commission in determining the appropriate action to be taken, but will not serve to make protestants parties to the proceedings. Any person wishing to become a party must file a motion to intervene. Copies of this filing are on file with the Commission and are available for public inspection in the Public Reference Room. This filing may be viewed on the web at http://www.ferc.fed.us/online/rims.htm (call 202–208–2222 for assistance). Comments and protests may be filed electronically via the internet in lieu of paper. See, 18 CFR 385.2001(a)(1)(iii) and the instructions on the Commission's web site at http://www.ferc.fed.us/efi/doorbell.htm.

David P. Boergers,

Secretary.

[FR Doc. 00–28941 Filed 11–9–00; 8:45 am]

BILLING CODE 6717–01–M

DEPARTMENT OF ENERGY

Federal Energy Regulatory Commission

[Docket No. RP96–200–059]

Reliant Energy Gas Transmission Company; Notice of Proposed Changes in FERC Gas Tariff

November 6, 2000.

Take notice that on November 1, 2000, Reliant Energy Gas Transmission Company (REGT) tendered for filing as part of its FERC Gas Tariff, Fifth Revised Volume No. 1, the following tariff sheets to be effective November 1, 2000:

Fourth Revised Sheet No. 8I
Second Revised Sheet No. 8J

REGT states that the purpose of this filing is to reflect the addition of two new negotiated rate contracts.

Any person desiring to be heard or to protest said filing should file a motion to intervene or a protest with the Federal Energy Regulatory Commission, 888 First Street, NE., Washington, DC 20426, in accordance with § 385.214 or § 385.211 of the Commission's rules and regulations. All such motions or protests must be filed in accordance with § 154.210 of the Commission's regulations. Protests will be considered by the Commission in determining the appropriate action to be taken, but will not serve to make protestants parties to the proceedings. Any person wishing to become a party must file a motion to intervene. Copies of this filing are on file with the Commission and are available for public inspection in the Public Reference Room. This filing may be viewed on the web at http://www.ferc.fed.us/online/rims.htm (call 202–208–2222 for assistance). Comments and protests may be filed electronically via the internet in lieu of paper. See, 18 CFR 385.2001(a)(1)(iii) and the instructions on the Commission's web site at http://www.ferc.fed.us/efi/doorbell.htm.

David P. Boergers,

Secretary.

[FR Doc. 00–28924 Filed 11–9–00; 8:45 am]

BILLING CODE 6717–01–M

DEPARTMENT OF ENERGY

Federal Energy Regulatory Commission

[Docket No. RP00–514–002]

Southern Natural Gas Company; Notice of Proposed Changes to FERC Gas Tariff

November 6, 2000.

Take notice on October 30, 2000, Southern Natural Gas Company (Southern) tendered for filing as part of its FERC Gas Tariff, Seventh Revised Volume No. 1, the following tariff sheets to become effective October 1, 2000:

Fifth Revised Sheet No. 99
1st Substitute Fourth Revised Sheet No. 101
1st Substitute Original Sheet No. 101A
1st Substitute Original Sheet No. 101B
1st Substitute 1st Revised Sheet No. 102
1st Substitute Original Sheet No. 102–A

Southern states that the purpose of this filing is to comply with the Commission's order dated September 28, 2000 in the above-referenced docket. Such letter order generally approved Southern's tariff filing made to replace its first-come, first-served capacity allocation methodology to a net present value (NPV) of awarding available capacity. Such order required Southern to make a compliance filing: (i) To limit the establishment of a reserve price in an open season to prior to the posting; (ii) to revise its proposal that shippers must return their Service Agreements within ten (10) business days after receipt if the terms of the Service Agreement reflect the terms of the bid or fifteen (15) business days if the terms do not identically follow the bid; (iii) to establish a minimum bidding period for open seasons which Southern has set at three days for available capacity for less than one year and ten days for one year or more; (iv) to establish the length of time in which Southern must evaluate the bids in an open season; (v) to specify that Southern will post available capacity and the winning bid and NPV method used to calculate the bid; (vi) to specify that Southern's tie breaker methodology for comparable bids is prorata; (vii) to clarify that Primary Receipt Point amendments will be awarded on a first-come, first-served basis; (viii) to clarify that if Southern awards capacity out of pending requests in the queue then it will do so on a first-come, first-served basis.

In addition, Southern has filed a clarification to Section 2.1(a) of the General Terms and Conditions specifying that bids made as part of an open season under Section 2.1(b)(iv) could request service that will

commence outside of the 60 day period generally required for FT Requests. Southern intended that open seasons could be held more than 60 days prior to the date the capacity became available, and this tariff language clarifies Southern's intention.

Southern has made an additional clarification consistent with Answer filed by Southern in this proceeding by specifying that, to the extent there are pending requests in the queue for which capacity becomes available, it will within thirty days, either award the capacity on a first-come, first-served basis, post to reserve the capacity, or post its intention to hold an open season for the capacity.

Finally, with respect to the requirement of the commission to specify the length of time to evaluate bids, Southern states that it will post the response time in the open season posting.

Southern states that it needs the flexibility to tailor the response time to the complexity of the open season.

Southern has requested that these sheets be made effective as of October 1, 2000 consistent with the Commission's September 28th Order.

Southern states that copies of the filing will be served upon its shippers and interested state commissions.

Any person desiring to protest said filing should file a protest with the Federal Energy Regulatory Commission, 888 First Street, NE., Washington, DC 20426, in accordance with section 385.211 of the Commission's Rules and Regulations. All such protests must be filed in accordance with Section 154.210 of the Commission's Regulations. Protests will be considered by the Commission in determining the appropriate action to be taken, but will not serve to make protestants parties to the proceedings. Copies of this filing are on file with the Commission and are available for public inspection in the Public Reference Room. This filing may be viewed on the web at http://www.ferc.fed.us/online/rims.htm (call 202–208–2222 for assistance). Comments and protests may be filed electronically via the internet in lieu of paper. See, 18 CFR 385.2001(a)(1)(iii) and the instructions on the Commission's web site at http://www.ferc.fed.us/efi/doorbell.htm.

David P. Boergers,

Secretary.

[FR Doc. 00–28940 Filed 11–9–00; 8:45 am]

BILLING CODE 6717–01–M

DEPARTMENT OF ENERGY

Federal Energy Regulatory Commission

[Docket No. RP00–260–004]

Texas Gas Transmission Corporation; Notice of Proposed Changes in FERC Gas Tariff

November 6, 2000.

Take notice that on October 31, 2000, Texas Gas Transmission Corporation (Texas Gas) tendered for filing changes to its FERC Gas Tariff, First Revised Volume No. 1. This motion rate/compliance filing is being made to place the tariff sheets listed below into effect on November 1, 2000, in compliance with the Commission's Order issued May 31, 2000, in Docket No. RP00–260 at 91FERC ¶61,215 (2000).

Alternate Substitute First Revised Sixth Revised Sheet No. 1
*Substitute First Revised Seventh Revised Sheet No. 2
Substitute Thirty-fourth Revised Sheet No. 10
Substitute Seventeenth Revised Sheet No. 10A
Substitute First Revised Original Sheet No. 10A.01
Substitute First Revised Original Sheet No. 10A.02
Substitute First Revised Original Sheet No. 10A.03
Substitute Thirtieth Revised Sheet No. 11
Substitute Twenty-second Revised Sheet No. 11A
Substitute Eighteenth Revised Sheet No. 11B
Substitute Third Revised Sheet No. 11C
Alternate Second Substitute Original Sheet No. 11D
Alternate Substitute Thirty-second Revised Sheet No. 12
Substitute Eleventh Revised Sheet No. 12A
Substitute Thirteenth Revised Sheet No. 13
Substitute Third Revised Sheet No. 13A
Substitute Twelfth Revised Sheet No. 15
Substitute Thirteenth Revised Sheet No. 16
Alternate Substitute Twelfth Revised Sheet No. 17
*Substitute Second Revised Sheet No. 66
*Substitute First Revised Sheet No. 71
*Substitute First Revised Sheet No. 72
Substitute Second Revised Sheet No. 81
*Substitute Second Revised Sheet No. 86
*Substitute First Revised Sheet No. 87
*Substitute First Revised Sheet No. 94
*Substitute Second Revised Sheet No. 97
*Substitute First Revised Sheet No. 98
*Substitute First Revised Sheet No. 99
*Substitute Original Sheet Nos. 99A–99M
*Substitute Second Revised Sheet No. 111
*Substitute First Revised Sheet No. 119
*Substitute First Revised First Revised Sheet No. 165
*Substitute First Revised Second Revised Sheet No. 166
*Substitute First Revised First Revised Sheet No. 166A
*Substitute First Revised First Revised Sheet No. 176
*Substitute First Revised Second Revised Sheet No. 177
*Substitute First Revised Sheet No. 280
*Substitute Original Sheet Nos. 290A–290K
*Substitute Second Revised Sheet No. 291
*Substitute First Revised Sheet No. 293
*Substitute First Revised Sheet No. 294
*Substitute Second Revised Sheet No. 295
*Substitute First Revised Sheet No. 296
*Substitute First Revised Sheet No. 297
*Substitute Second Revised Sheet No. 298
*Substitute First Revised Sheet No. 299

*The only change on sheets designated with an asterisk is the effective date (November 1, 2000 instead of June 1, 2000). Because the tariff language on these sheets has not changed, there are no red-lined versions of sheets designated with an asterisk in this filing.

Texas Gas requests an effective date of November 1, 2000, for the proposed tariff sheets.

Texas Gas further states that it has served copies of this filing upon the company's jurisdictional customers, interested state commission, and all parties appearing on the official restricted service list in Docket No. RP00–260.

Any person desiring to protest said filing should file a protest with the Federal Energy Regulatory Commission, 888 First Street, NW., Washington, DC 20426, in accordance with Section 385.211 of the Commission's Rules and Regulations. All such protests must be filed in accordance with Section 154.210 of the Commission's Regulations. Protests will be considered by the Commission in determining the appropriate action to be taken, but will not serve to make protestants parties to the proceedings. Copies of this filing are on file with the Commission and are available for public inspection in the Public Reference Room. This filing may be viewed on the web at http://www.ferc.fed.us/online/rims.htm (call 202–208–2222 for assistance). Comments and protests may be filed electronically via the internet in lieu of paper. See, 18 CFR 385.2001(a)(1)(iii) and the instructions on the Commission's web site at http://www.ferc.fed.us/efi/doorbell.htm.

David P. Boergers,

Secretary.

[FR Doc. 00–28937 Filed 11–9–00; 8:45 am]

BILLING CODE 6717–01–M

DEPARTMENT OF ENERGY

Federal Energy Regulatory Commission

[Docket No. RP00–260–005]

Texas Gas Transmission Corporation; Notice of Proposed Changes in FERC Gas Tariff

November 6, 2000.

Take notice that on October 31, 2000, Texas Gas Transmission Corporation (Texas Gas) tendered for filing changes to its FERC Gas Tariff, First Revised Volume No. 1, in compliance with the Commission's Order on Compliance and Rehearing, and Referring Additional Issues for Hearing issued October 27, 2000, in the above-captioned docket (the October 27 Order):

Substitute First Revised Sixth Revised Sheet No. 1
Second Substitute Original Sheet No. 11D
Substitute Thirty-Second Revised Sheet No. 12
Original Sheet No. 12.01
Substitute Twelfth Revised Sheet No. 17
Seventh Revised Sheet No. 18
Original Sheet No. 19

Texas Gas requests an effective date of November 1, 2000, for the proposed tariff sheets.

Texas Gas further states that it has served copies of this filing upon the company's jurisdictional customers, interested state commission, and all parties appearing on the official restricted service list in Docket No. RP00–260.

Any person desiring to protest said filing should file a protest with the Federal Energy Regulatory Commission, 888 First Street, NE., Washington, DC 20426, in accordance with Section 385.2111 of the Commission's Rules and Regulations. All such protests must be filed in accordance with Section 154.210 of the Commission's Regulations. Protests will be considered by the Commission in determining the appropriate action to be taken, but will not serve to make protestants parties to the proceedings. Copies of this filing are on file with the Commission and are available for public inspection in the Public Reference Room. This filing may be reviewed on the web at http://www.ferc.fed.us/online/rims.htm (call 202–208–2222 for assistance). Comments and protests may be filed electronically via the internet in lieu of paper. See, 18 CFR 385.2001(a)(1)(iii) and the instructions on the Commission's web site at http://www.ferc.fed.us/efi/doorbell.htm.

David P. Boergers,
Secretary.
[FR Doc. 00–28938 Filed 11–9–00; 8:45 am]
BILLING CODE 6717–01–M

DEPARTMENT OF ENERGY

Federal Energy Regulatory Commission

[Docket No. RP96–359–004]

Transcontinental Gas Pipe Line Corporation; Notice of Service Agreement

November 6, 2000.

Take notice that on October 31, 2000 Transcontinental Gas Pipe Line Corporation (Transco) tendered for filing copies of the executed service agreements that contain a negotiated rate under Rate Schedule FT applicable to the SouthCoast Expansion Project between Transco and various SouthCoast customers.

Transco states that the purpose of the instant filing is to comply with filing requirements specified in the orders granting Transco's negotiated rate authority and the Commission's Policy Statement. The effective date of these negotiated rate transactions is November 1, 2000, which is the in-service date of the SouthCoast Expansion Project. In compliance with the Commission's orders, the enclosed service agreements disclose the name of the customer, the actual negotiated rate and term, the receipt and delivery points, the quantity of gas to be transported and the applicable rate schedule for the service.

Transco also affirms that the negotiated rate agreements do not deviate in any material aspect from the applicable Rate Schedule FT form of service agreement in the tariff.

Transco states that copies of the filing are being mailed to its affected customers and interested State Commissions.

Any person desiring to protest said filing should file a protest with the Federal Energy Regulatory Commission, 888 First Street, NE., Washington, DC 20426, in accordance with section 385.211 of the Commission's Rules and Regulations. All Such protests must be filed on or before November 13, 2000. Protests will be considered by the Commission in determining the appropriate action to be taken, but will not serve to make protestants parties to the proceedings. Copies of this filing are on file with the Commission and are available for public inspection in the Public Reference Room. This filing may be viewed on the web at http://www.ferc.fed.us/online/rims.htm (call 202–208–2222 for assistance). Comments and protests may be filed electronically via the internet in lieu of paper. See, 18 CFR 385.2001(a)(1)(iii) and the instructions on the Commission's web site at *http://www.ferc.fed.us/efi/doorbell.htm.*

David P. Boergers,
Secretary.
[FR Doc. 00–28929 Filed 11–9–00; 8:45 am]
BILLING CODE 6717–01–M

DEPARTMENT OF ENERGY

Federal Energy Regulatory Commission

[Docket No. EG01–20–000, et al.]

Goldendale Energy, Inc., et al.; Electric Rate and Corporate Regulation Filings

November 6, 2000.

Take notice that the following filings have been made with the Commission:

1. Goldendale Energy, Inc.

[Docket No. EG01–20–000]

Take notice that on November 1, 2000, Goldendale Energy, Inc. (Applicant), 335 Parkplace, Suite 110, Kirkland, WA 98033, filed with the Federal Energy Regulatory Commission an application for determination of exempt wholesale generator status pursuant to Part 365 of the Commission's regulations.

Applicant will own an approximately 248 MW electric generating facility located in Goldendale, Washington and interconnection facilities necessary to effect sales at wholesale (the Facility). The Facility's electricity will be sold exclusively at wholesale.

Comment date: November 27, 2000, in accordance with Standard Paragraph E at the end of this notice. The Commission will limit its consideration of comments to those that concern the adequacy or accuracy of the application.

2. Sithe Fore River Development LLC

[Docket No. EG01–21–000]

Take notice that on November 1, 2000, Sithe Fore River Development LLC (Sithe Fore River Development) filed with the Commission an application for determination of exempt wholesale generator (EWG) status pursuant to part 365 of the Commission's regulations.

Comment date: November 27, 2000, in accordance with Standard Paragraph E at the end of this notice. The Commission will limit its consideration

of comments to those that concern the adequacy or accuracy of the application.

3. Sithe Mystic Development LLC

[Docket No. EG01–22–000]

Take notice that on November 1, 2000, Sithe Mystic Development LLC (Sithe Mystic Development) filed with the Commission an application for determination of exempt wholesale generator (EWG) status pursuant to part 365 of the Commission's regulations.

Comment date: November 27, 2000, in accordance with Standard Paragraph E at the end of this notice. The Commission will limit its consideration of comments to those that concern the adequacy or accuracy of the application.

4. Duke Energy Corporation

[Docket No. ER01–280–000]

Take notice that on October 31, 2000, Duke Energy Corporation (Duke), tendered for filing an Amendment to its Catawba Interconnection Agreement with North Carolina Municipal Power Agency No. 1 in the above-referenced docket.

Duke respectfully requests that this amendment be accepted for filing and made effective January 1, 2001.

Comment date: November 21, 2000, in accordance with Standard Paragraph E at the end of this notice.

5. Duke Energy Corporation

[Docket No. ER01–281–000]

Take notice that on October 31, 2000, Duke Energy Corporation (Duke), tendered for filing an Amendment to its Catawba Interconnection Agreement with Saluda River Electric Cooperative, Inc., in the above-captioned docket.

Duke respectfully requests that this amendment be accepted for filing and made effective December 31, 2000.

Comment date: November 21, 2000, in accordance with Standard Paragraph E at the end of this notice.

6. Duke Energy Corporation

[Docket No. ER01–282–000]

Take notice that on October 31, 2000, Duke Energy Corporation (Duke), tendered for filing an Amendment to its Catawba Interconnection Agreement with North Carolina Electric Membership Corporation in the above-referenced docket.

Duke respectfully requests that this amendment be accepted for filing and made effective January 1, 2001.

Comment date: November 21, 2000, in accordance with Standard Paragraph E at the end of this notice.

7. Duke Electric Transmission

[Docket No. ER01–283–000]

Take notice that on October 31, 2000, Duke Electric Transmission (Duke), tendered for filing a Network Integration Transmission Service Agreement and Network Operating Agreement for transmission service to North Carolina Electric Membership Corporation in the above-referenced docket.

Duke respectfully requests that these agreements be accepted for filing and made effective January 1, 2001.

Comment date: November 21, 2000, in accordance with Standard Paragraph E at the end of this notice.

8. Wolverine Power Supply Cooperative, Inc.

[Docket No. ER01–284–000]

Take notice that on October 31, 2000, Wolverine Power Supply Cooperative, Inc., tendered for filing an executed Wholesale Power Sales Enabling Agreement with Wolverine Power Marketing Cooperative, Inc. under its Market-Based Power Sales Tariff.

Wolverine requests an effective date of January 1, 2001 for the Agreement.

Comment date: November 21, 2000, in accordance with Standard Paragraph E at the end of this notice.

9. Wolverine Power Supply Cooperative, Inc.

[Docket No. ER01–285–000]

Take notice that on October 31, 2000, Wolverine Power Supply Cooperative, Inc. (Wolverine), tendered for filing proposed changes to its Rate Schedule FERC No. 4—Wholesale Service to Member Distribution Cooperatives. The proposed changes amend Rate Schedule FERC No. 4 by (i) amending Rider ''DRC''—Debt Restructuring Charge to make the charge applicable to all energy delivered to the systems of Wolverine's member distribution cooperatives, (ii) adding Rider ''SB''—Standby Service Rate applicable to member distribution cooperatives who request standby generation from Wolverine, and (iii) amending Rider ''OIL'' to remove references to distribution cooperatives that no longer exist.

Copies of the filing were served on the public utility's jurisdictional customers and the Public Utility Commission of Michigan.

Comment date: November 21, 2000, in accordance with Standard Paragraph E at the end of this notice.

10. Wolverine Power Supply Cooperative, Inc.

[Docket No. ER01–286–000]

Take notice that on October 31, 2000, Wolverine Power Supply Cooperative, Inc. (Wolverine), tendered for filing an amendment to the Wolverine Open Access Transmission Tariff. The amendment accommodates retail customer choice in Michigan and adds delivery scheduling and balancing service as a new service for generators directly interconnected to the Wolverine transmission system.

Copies of the filing were served on Wolverine's four wholesale power customers and the Michigan Public Service Commission.

Comment date: November 21, 2000, in accordance with Standard Paragraph E at the end of this notice.

11. Duke Electric Transmission

[Docket No. ER01–291–000]

Take notice that on October 31, 2000, Duke Electric Transmission (Duke), tendered for filing a Network Integration Transmission Service Agreement and Network Operating Agreement for transmission service to North Carolina Municipal Power Agency No. 1 in the above-referenced docket.

Duke respectfully requests that these agreements be accepted for filing and made effective January 1, 2001.

Comment date: November 21, 2000, in accordance with Standard Paragraph E at the end of this notice.

12. Duke Electric Transmission

[Docket No. ER01–292–000]

Take notice that on October 31, 2000, Duke Electric Transmission (Duke), tendered for filing a Network Integration Transmission Service Agreement, Network Operating Agreement, and Master Meter Agreement for transmission service to New Horizon Electric Cooperative, Inc. in the above-referenced docket.

Duke respectfully requests that these agreements be accepted for filing and made effective December 31, 2000.

Comment date: November 21, 2000, in accordance with Standard Paragraph E at the end of this notice.

13. Ameren Energy Development Company

[Docket No. ER01–294–000]

Take notice that on October 31, 2000, Ameren Energy Development Company (AED), tendered for filing a request for authorization to engage in the sale of electric energy and capacity at market-based rates, along with a long-term Power Supply Agreement (PSA) for the sale of energy and capacity to Ameren Energy Marketing Company (AEM), an affiliated company that does not serve any captive retail customers. AED also seeks certain blanket approvals and waivers of certain regulations

promulgated under the FPA commonly granted to power marketers.

AED seeks an effective date of November 1, 2000, for the authorizations sought therein and for the PSA with AEM.

Comment date: November 21, 2000, in accordance with Standard Paragraph E at the end of this notice.

14. Outback Power Marketing Inc.

[Docket No. ER01–297–000]

Take notice that on October 31, 2000, Outback Power Marketing Inc. (OPMI) petitioned the Commission for acceptance of OPMI Rate Schedule FERC No. 1; the granting of certain blanket approvals, including the authority to sell electricity at market-based rates; and the waiver of certain Commission regulations, OPMI is a power marketing company incorporated in the State of Delaware.

Comment date: November 21, 2000, in accordance with Standard Paragraph E at the end of this notice.

15. State Line Energy, L.L.C.

[Docket No. ER01–295–000]

Take notice that on October 31, 2000, State Line Energy, L.L.C. (State Line), tendered for filing with the Federal Energy Regulatory Commission Amendment No. 2 to Power Purchase Agreement between Commonwealth Edison Company and State Line Energy, L.L.C., for short-term service under State Line's Market Rate Tariff, which was accepted for filing in Docket No. ER96–2869–000.

Comment date: November 21, 2000, in accordance with Standard Paragraph E at the end of this notice.

16. San Diego Gas & Electric Company

[Docket No. ER01–311–000]

Take notice that on October 31, 2000, San Diego Gas & Electric Company (SDG&E), tendered for filing an unexecuted Service Agreement between SDG&E and the City of Escondido (City), for service under SDG&E Open Access Distribution Tariff (OATD). SDG&E states that it tenders the Service Agreement to assure that service under the OATD is available to the city by January 1, 2001, the date on which the existing Power Sale Agreement between SDG&E and the city terminates.

Copies of this filing have been served upon the California Public Utilities Commission and the City.

17. Louisville Gas and Electric Company/Kentucky Utilities Company

[Docket No. ER01–337–000]

Take notice that on November 1, 2000, Louisville Gas and Electric Company (LG&E)/Kentucky Utilities (KU) (Companies), tendered for filing an executed Netting Agreement between the Companies and Rainbow Energy Marketing Corporation.

Comment date: November 22, 2000, in accordance with Standard Paragraph E at the end of this notice.

18. Fulton Cogeneration Associates, L.P.

[Docket No. ER01–324–000]

Take notice that on November 1, 2000, Fulton Cogeneration Associates, L.P. (Fulton), tendered for filing an application for an order which will permit Fulton to make wholesale sales of electric power to eligible customers at market-based rates. Fulton is the owner of a generating plant located in Rensselaer, New York that will be selling its output to Niagara Mohawk Power Corporation and in the wholesale market.

Comment date: November 22, 2000, in accordance with Standard Paragraph E at the end of this notice.

19. Commonwealth Edison Company

[Docket No. ER01–327–000]

Take notice that on November 1, 2000, Commonwealth Edison Company (ComEd), tendered for filing a Short-Term Firm Transmission Service Agreement with GEN~SYS Energy (GSE) under the terms of ComEd's Open Access Transmission Tariff (OATT).

ComEd requests an effective date of October 9, 2000, for the agreement with GSE, and accordingly, seeks waiver of the Commission's notice requirements.

Comment date: November 22, 2000, in accordance with Standard Paragraph E at the end of this notice.

20. Western Resources, Inc.; Kansas Gas and Electric Company

[Docket No. ER01–328–000]

Take notice that on November 1, 2000, Western Resource, Inc. (WR), and its wholly owned subsidiary The Kansas Gas and Electric Company tendered for filing in compliance with Order No. 614 versions of WR' Rate Schedule Federal Power Commission (FPC) No. 6 and KGE's Rate Schedule FPC No. 93. WR and KGE propose that these Order No. 614 compliant versions be designated as WR' 1st Revised Rate Schedule FPC No. 6 and KGE's 1st Revised Rate Schedule FPC No. 93, respectively.

WR and KGE propose an effective date of November 1, 2000.

Copies of this filing have been served upon the Kansas Corporation Commission.

Comment date: November 22, 2000, in accordance with Standard Paragraph E at the end of this notice.

21. American Transmission Company LLC

[Docket No. ER01–325–000]

Take notice that on November 1, 2000, American Transmission Company LLC (ATCLLC), tendered for filing service agreements for Short-Term Firm and Non-Firm Point-to-Point transmission service for the following customers under ATCLLC's Open Access Tariff. ATCLLC requests an effective date of January 1, 2001.

American Electric Power Service Corporation
Cargill-Alliant, LLC
Carolina Power & Light Company
Conectiv Energy Supply, Inc.
The Detroit Edison Company
Northern States Power Company
Powerex Corp.
PPL Energy Plus, LLC
Tennessee Power Company
Utilities Plus
Commonwealth Edison Company
Tenaska Power Services Co.
Cinergy Services, Inc
Edison Mission Marketing & Trading, Inc.
Southern Company Energy Marketing LLC

Comment date: November 22, 2000, in accordance with Standard Paragraph E at the end of this notice.

22. Dayton Power and Light Company

[Docket No. ER01–329–000]

Take notice that on November 1, 2000, Dayton Power and Light Company (Dayton), tendered for filing Service Agreements establishing Dayton Power & Light Company (Energy Services) as customers under the terms of Dayton's Open Access Transmission Tariff.

Dayton requests an effective date of one day subsequent to this filing for the service agreements. Accordingly, Dayton requests waiver of the Commission's notice requirements.

Copies of this filing were served upon The Dayton Power & Light Company (Energy Services) and the Public Utilities Commission of Ohio.

Comment date: November 22, 2000, in accordance with Standard Paragraph E at the end of this notice.

23. New York State Electric & Gas Corporation

[Docket No. ER01–330–000]

Take notice that on November 1, 2000, New York State Electric & Gas Corporation (NYSEG), tendered for filing pursuant to § 35.15 of the Commission's rules, 18 CFR 35.15, a Notice of Cancellation of FERC Rate Schedule Nos. 36 and 84.

NYSEG requests that the Notice of Cancellation be deemed effective as of

November 30, 1998. To the extent required to give effect to the Notice of Cancellation, NYSEG requests waiver of the notice requirements pursuant to § 35.15 of the Commission's Rules, 18 CFR 35.15.

NYSEG served copies of the Notice of Cancellation on the New York Power Authority, the customer previously receiving service under FERC Rate Schedule Nos. 36 and 84, and the New York State Public Service Commission.

Comment date: November 22, 2000, in accordance with Standard Paragraph E at the end of this notice.

24. PECO Energy Company

[Docket No. ER01–333–000]

Take notice that on November 1, 2000, PECO Energy Company (PECO), tendered for filing under section 205 of the Federal Power Act, 16 U.S.C. S 792 *et seq.*, a Service Agreement dated October 23, 2000 with Reliant Energy HLP under PECO's FERC Electric Tariff Original Volume No. 1 (Tariff).

PECO requests an effective date of November 1, 2000 for the Agreement.

PECO states that copies of this filing have been supplied to Reliant Energy HL&P and to the Pennsylvania Public Utility Commission.

Comment date: November 22, 2000, in accordance with Standard Paragraph E at the end of this notice.

25. Public Service Company of New Mexico

[Docket No. ER01–331–000]

Take notice that on November 1, 2000, Public Service Company of New Mexico (PNM), tendered for filing, pursuant to the Regulations of the Federal Energy Regulatory Commission (18 CFR 35.15), Notices of Cancellation of several service agreements between PNM and Tri-State Generation and Transmission Association, Inc. (Tri-State).

Pursuant to PNM's filing, the agreements to be canceled include: Service Schedule A to the PNM-Tri-State Master Interconnection Agreement, dated February 28, 1977 (Rate Schedule FERC No. 31, Supplement 4); Service Schedule C to the PNM-Tri-State Master Interconnection Agreement, dated March 1, 1980 (Rate Schedule FERC No. 31, Supplements 18, 18.1, 18.2, 28, and 29); Service Schedule E to the PNM-Tri-State Master Interconnection Agreement, dated April 4, 1979 (Rate Schedule FERC No. 31, Supplements 13, 13.1.1, 13.2, 13.2.1, 13.2.2, 13.2.3, and 13.2.4); Service Schedule F to the PNM-Tri-State Master Interconnection Agreement, dated February 28, 1977 (Rate Schedule FERC No. 31, Supplement 6); Service Schedule G to the PNM-Tri-State Master Interconnection Agreement, dated February 27, 1987 (Rate Schedule FERC No. 31, Supplements 43, 43.1, 43.2, 43.5, 45, and 45.1); Service Schedule H to the PNM-Tri-State Master Interconnection Agreement, dated May 12, 1977 (Rate Schedule FERC No. 31, Supplements 7 and 7.1); the Contract for Transmission Service Agreement Between PNM and Tri-State, dated July 11, 1968 (Rate Schedule FERC No. 12); the Agreement to Wheel Power Between PNM and Tri-State, dated January 2, 1976 (Rate Schedule FERC No. 30, Supplements 1, 2 and 3); and the Norton Switching Station Agreement dated December 13, 1972 (Rate Schedule FERC No. 31, Supplements 44 and 44.1). PNM's filing is available for public inspection at its offices in Albuquerque, New Mexico.

Comment date: November 22, 2000, in accordance with Standard Paragraph E at the end of this notice.

26. Tucson Electric Power Company

[Docket No. ER01–334–000]

Take notice that on November 1, 2000, Tucson Electric Power Company tendered for filing a revised generation dominance study.

Comment date: November 22, 2000, in accordance with Standard Paragraph E at the end of this notice.

27. Allegheny Energy Supply Hunlock Creek, LLC

[Docket No. ER01–332–000]

Take notice that on November 1, 2000, Allegheny Energy Supply Hunlock Creek, LLC (Allegheny Energy LLC), tendered for filing a Market Rate Tariff of general applicability under which it proposes to sell capacity and energy to affiliates and non-affiliates at market-based rates, and to make such sales to franchised public utility affiliates at rates capped by a publicly available regional index price.

Allegheny Energy LLC requests an effective date no later than November 9, 2000.

Copies of the filing have been provided to the Public Utilities Commission of Ohio, the Pennsylvania Public Utility Commission, the Maryland Public Service Commission, the Virginia State Corporation Commission, the West Virginia Public Service Commission, and all parties of record.

Comment date: November 22, 2000, in accordance with Standard Paragraph E at the end of this notice.

28. New England Power Pool

[Docket No. ER01–335–000]

Take notice that on November 1, 2000, the New England Power Pool (NEPOOL), Participants Committee filed for acceptance materials to permit NEPOOL to expand its membership to include PSEG Energy Resources & Trade LLC (ER&T), TXU Energy Trading Company (TXU) and Worcester Trading, Inc. (Worcester).

The Participants Committee requests an effective date of November 1, 2000 for commencement of participation in NEPOOL by ER&T and TXU and an effective date for the commencement of participation in NEPOOL by Worcester as of the date of its license by the State of Maine as a Competitive Electricity Provider.

The Participants Committee states that copies of these materials were sent to the New England state governors and regulatory commissions and the Participants in NEPOOL.

Comment date: November 22, 2000, in accordance with Standard Paragraph E at the end of this notice.

29. PJM Interconnection, L.L.C.

[Docket No. ER01–336–000]

Take notice that on November 1, 2000, Potomac Electric Power Company tendered for filing a revised Attachment H–9 to the PJM Open Access Transmission Tariff, reducing the Other Supporting Facilities Charge for lower voltage deliveries in the Pepco Zone of PJM to Southern Maryland Electric Cooperative, Inc.

Copies of this filing were served upon PJM Interconnection, LLC., Southern Maryland Electric Cooperative, Inc., and the Maryland Public Service Commission.

Comment date: November 22, 2000, in accordance with Standard Paragraph E at the end of this notice.

30. Southern California Edison Company

[Docket No. ER01–314–000]

Take notice, that on November 1, 2000, Southern California Edison Company (SCE), tendered for filing a change in rate for scheduling and dispatching services as embodied in SCE's agreements with the following entities:

Entity	Rate schedule FERC No.
1. Arizona Electric Power Co-operative.	132.
2. Arizona Public Service Company.	348.

Entity	Rate schedule FERC No.
3. California Department of Water Resources.	112, 113, 342.
4. Imperial Irrigation District	268.
5. Metropolitan Water District of Southern California.	292.
6. M–S–R Public Power Agency.	339.
7. Pacific Gas and Electric Company.	256, 318.
8. PacifiCorp	275.

SCE requests that the revised rate for these services be made effective January 1, 2001.

Copies of this filing were served upon the Public Utilities Commission of the State of California and all interested parties.

Comment date: November 22, 2000, in accordance with Standard Paragraph E at the end of this notice.

31. Alliant Energy Corporate Services, Inc.

[Docket No. ER01–312–000]

Take notice that on November 1, 2000, Alliant Energy Corporate Services, Inc., on behalf of IES Utilities Inc. (IES), Interstate Power Company (IPC) and Wisconsin Power and Light Company (WPL), tendered for filing with the Commission new rates to be charged under its Open Access Transmission Tariff to reflect the transfer of the ownership of certain transmission facilities from WPL and its subsidiary South Beloit Water, Gas and Electric Company to the American Transmission Company, LLC.

Alliant Energy Corporate Services, Inc., has asked that the new rates become effective on January 1, 2001

A copy of this filing has been served upon the Illinois Commerce Commission, the Minnesota Public Utilities Commission, the Iowa Department of Commerce, the Public Service Commission of Wisconsin and Alliant Energy Corporate Services, Inc transmission customers.

32. California Independent System Operator Corporation

[Docket No. ER01–313–000]

Take notice that on November 1, 2000, the California Independent System Operator Corporation (ISO), tendered for filing an unbundled Grid Management Charge. The purpose of the Grid Management Charge is to allow the ISO to recover its administrative and operating costs.

The ISO requests that the unbundled Grid Management Charge be made effective as of January 1, 2001.

The ISO states that this filing has been served on the California Public Utilities Commission, all California ISO Scheduling Coordinators, and all parties on the official service lists maintained by the Secretary for the following dockets related to the Grid Management Charge: ER98–211–000, ER99–473–000, ER99–2730–000, EL99–47–000, and EL99–67–000.

Comment date: November 22, 2000, in accordance with Standard Paragraph E at the end of this notice.

Standard Paragraphs: 1

E. Any person desiring to be heard or to protest such filing should file a motion to intervene or protest with the Federal Energy Regulatory Commission, 888 First Street, NE., Washington, DC 20426, in accordance with Rules 211 and 214 of the Commission's rules of practice and procedure (18 CFR 385.211 and 385.214). All such motions or protests should be filed on or before the comment date. Protests will be considered by the Commission in determining the appropriate action to be taken, but will not serve to make protestants parties to the proceeding. Any person wishing to become a party must file a motion to intervene. Copies of these filings are on file with the Commission and are available for public inspection. This filing may also be viewed on the Internet at http://www.ferc.fed.us/ online/rims.htm (call 202–208–2222 for assistance).

David P. Boergers,

Secretary.

[FR Doc. 00–28921 Filed 11–9–00; 8:45 am]

BILLING CODE 6717–01–U

DEPARTMENT OF ENERGY

Federal Energy Regulatory Commission

[Docket No. ER00–3589–001, et al.]

Public Service Electric and Gas Company, et al.; Electric Rate and Corporate Regulation Filings

November 2, 2000.

Take notice that the following filings have been made with the Commission:

1. Public Service Electric and Gas Company

[Docket No. ER00–3589–001]

Take notice that on October 27, 2000, Public Service Electric and Gas Company (PSE&G), tendered for filing pursuant to Order No. 614, a revised Firm Capacity Agreement with Orange and Rockland Utilities, Inc., originally filed with the Commission on September 1, 2000 in the above-referenced docket.

Comment date: November 17, 2000, in accordance with Standard Paragraph E at the end of this notice.

2. International Transmission Company

[Docket No. ER00–3295–003]

Take notice that on October 30, 2000, International Transmission Company tendered for filing its compliance filing in the above-captioned docket, in accordance with the Federal Energy Regulatory Commission's order issued September 28, 2000. See 92 FERC ¶ 61,276.

Comment date: November 20, 2000, in accordance with Standard Paragraph E at the end of this notice.

3. Florida Power & Light Company

[Docket No. ER97–3359–003]

Take notice that on October 30, 2000, Florida Power & Light Company tendered for filing an updated market power analysis in compliance with the Commission's order in Florida Power & Light Co., 81 FERC ¶ 61,107 (1997).

Comment date: November 20, 2000, in accordance with Standard Paragraph E at the end of this notice.

4. American Electric Power Service Corporation

[Docket No. ER01–253–000]

Take notice that on October 30, 2000, the American Electric Power Service Corporation (AEPSC), tendered for filing executed Firm and Non-Firm Point-to-Point Transmission Service Agreements for Illinois Electric Marketing, LLC, Texas Electric Marketing, LLC and Wolverine Power Supply Cooperative. All of these agreements are pursuant to the AEP Companies' Open Access Transmission Service Tariff (OATT) that has been designated as the Operating Companies of the American Electric Power System FERC Electric Tariff Revised Volume No. 6, effective June 15, 2000.

AEPSC requests waiver of notice to permit the Service Agreements to be made effective for service billed on and after October 1, 2000.

A copy of the filing was served upon the Parties and the state utility regulatory commissions of Arkansas, Indiana, Kentucky, Louisiana, Michigan, Ohio, Oklahoma, Tennessee, Texas, Virginia and West Virginia.

Comment date: November 20, 2000, in accordance with Standard Paragraph E at the end of this notice.

5. Northern Indiana Public Service Company

[Docket No. ER01–254–000]

Take notice that on October 30, 2000, Northern Indiana Public Service Company (Northern Indiana), tendered for filing a Service Agreement pursuant to its Wholesale Market-Based Rate Tariff with NewEnergy Midwest, LLC (NewEnergy).

Northern Indiana has requested an effective date of October 1, 2000.

Copies of this filing have been sent to NewEnergy, the Indiana Utility Regulatory Commission, and the Indiana Office of Utility Consumer Counselor.

Comment date: November 20, 2000, in accordance with Standard Paragraph E at the end of this notice.

6. Duquesne Light Company

[Docket No. ER01–255–000]

Take notice that on October 30, 2000, Duquesne Light Company (DLC), tendered for filing a Service Agreement for Retail Network Integration Transmission Service and a Network Operating Agreement for Retail Network Integration Transmission Service dated October 27, 2000 Dominion Energy Direct Sales, Inc. under DLC's Open Access Transmission Tariff (Tariff). The Service Agreement and Network Operating Agreement adds Dominion Energy Direct Sales, Inc. as a customer under the Tariff.

DLC requests an effective date of October 27, 2000 for the Service Agreement.

Comment date: November 20, 2000, in accordance with Standard Paragraph E at the end of this notice.

7. American Electric Power Service Corporation

[Docket No. ER01–256–000]

Take notice that on October 30, 2000, American Electric Power Service Corporation, tendered for filing, on behalf of the operating companies of the American Electric Power System (AEP), proposed amendments to the Open Access Transmission Tariff accepted for filing by the Commission in Docket No. ER98–2786–000.

AEP requests waiver of notice to permit an effective date of January 1, 2001, for such amendments.

Copies of the filing have been served upon AEP's transmission customers and the state utility regulatory commissions of Arkansas, Indiana, Kentucky, Louisiana, Michigan, Ohio, Oklahoma, Tennessee, Texas, Virginia and West Virginia.

Comment date: November 20, 2000, in accordance with Standard Paragraph E at the end of this notice.

8. American Electric Power Service Corporation

[Docket No. ER01–257–000]

Take notice that on October 30, 2000, the American Electric Power Service Corporation (AEPSC), tendered for filing a Transaction Confirmation Agreement (Confirmation) for a firm power sale between AEPSC and City of Vernon, California under Western System Power Pool Agreement effective July 1, 2000 under Rate Schedule FERC No.3 in Docket ER99–541–000 as amended.

AEPSC respectfully requests waiver of notice to permit the Confirmation to be made effective as of October 1, 2000.

A copy of the filing was served upon the Parties and the State Utility Regulatory Commissions of Arkansas, Indiana, Kentucky, Louisiana, Michigan, Ohio, Oklahoma, Tennessee, Texas, Virginia and West Virginia.

Comment date: November 20, 2000, in accordance with Standard Paragraph E at the end of this notice.

9. Central Maine Power Company

[Docket No. ER01–258–000]

Take notice that on October 30, 2000, Central Maine Power Company (CMP), tendered for filing a service agreement for Short-Term Firm Local Point-to-Point Transmission Service entered into with Greenville Steam Company. Service will be provided pursuant to CMP's Open Access Transmission Tariff, designated rate schedule CMP–FERC Electric Tariff, Original Volume No. 3, as supplemented.

Comment date: November 20, 2000, in accordance with Standard Paragraph E at the end of this notice.

10. PPL EnergyPlus, LLC

[Docket No. ER01–260–000]

Take notice that on October 30, 2000, PPL EnergyPlus, LLC tendered for filing a notice of cancellation of PPL EnergyPlus, LLC Rate Schedule FERC No. 7, between PPL EnergyPlus, LLC and Jersey Central Power & Light Company.

PPL EnergyPlus requests an effective date of this cancellation of November 29, 2000.

PPL EnergyPlus, LLC has served a copy of the notice of cancellation on Jersey Central Power & Light Company.

Comment date: November 20, 2000, in accordance with Standard Paragraph E at the end of this notice.

11. Public Service Electric and Gas Company

[Docket No. ER01–261–000]

Take notice that on October 30, 2000, Public Service Electric and Gas Company (PSE&G), tendered for filing the following Agreement between PSE&G, JEDI Linden NB, L.L.C. (JEDI Linden) and Tosco Refining, L.P. (Tosco): (a) an Interconnection Agreement, designated as Service Agreement 208 under PJM Interconnection L.L.C.'s FERC Electric Tariff Third Revised Volume No. 1, to be effective on the initial operation date as PSE&G's Rate Schedule No. 167.

Copies of this filing were served on JEDI Linden and Tosco.

Comment date: November 20, 2000, in accordance with Standard Paragraph E at the end of this notice.

12. Florida Power Corporation

[Docket No. ER01–262–000]

Take notice that on October 30, 2000, Florida Power Corporation (Florida Power), tendered for filing two executed Interconnection and Operating Agreements (Interconnection Agreements) with Shady Hills Power Company, LLC (Shady Hills) and with Reliant Energy Osceola, LLC (Reliant-Osceola). Both Interconnection Agreements are being filed as service agreements under Florida Power's open access transmission tariff (OATT), FERC Electric Tariff, First Revised Volume No. 6. The Interconnection Agreements set forth the terms and conditions governing the interconnection between two, yet-to-be constructed generating facilities and the Company's transmission system, including the Company's construction of required interconnection facilities.

Florida Power requests an October 1, 2000 effective date for the Shady Hills Interconnection Agreement, and a November 1, 2000 effective date for the Reliant-Osceola Interconnection Agreement.

Copies of the filing were served upon Shady Hills, Reliant-Osceola, and the Florida Public Service Commission.

Comment date: November 20, 2000, in accordance with Standard Paragraph E at the end of this notice.

13. Cinergy Services, Inc.

[Docket No. ER01–264–000]

Take notice that on October 30, 2000, Cinergy Services, Inc. (Cinergy), tendered for filing a Firm Point-to-Point Service Agreement under Cinergy's Open Access Transmission Service Tariff (OATT) entered into between Cinergy and Unicom Energy, Inc. (Unicom).

Cinergy and Unicom are requesting an effective date of September 25, 2000.

Comment date: November 20, 2000, in accordance with Standard Paragraph E at the end of this notice.

14. Cinergy Services, Inc.

[Docket No. ER01–265–000]

Take notice that on October 26, 2000, Cinergy Services, Inc. (Cinergy), tendered for filing a Non-Firm Point-to-Point Service Agreement under Cinergy's Open Access Transmission Service Tariff (OATT) entered into between Cinergy and Unicom Energy, Inc. (Unicom).

Cinergy and Unicom are requesting an effective date of September 25, 2000.

Comment date: November 20, 2000, in accordance with Standard Paragraph E at the end of this notice.

Standard Paragraphs

E. Any person desiring to be heard or to protest such filing should file a motion to intervene or protest with the Federal Energy Regulatory Commission, 888 First Street, NE., Washington, DC 20426, in accordance with Rules 211 and 214 of the Commission's rules of practice and procedure (18 CFR 385.211 and 385.214). All such motions or protests should be filed on or before the comment date. Protests will be considered by the Commission in determining the appropriate action to be taken, but will not serve to make protestants parties to the proceeding. Any person wishing to become a party must file a motion to intervene. Copies of these filings are on file with the Commission and are available for public inspection. This filing may also be viewed on the Internet at http://www.ferc.fed.us/online/rims.htm (call 202–208–2222 for assistance).

David P. Boergers,

Secretary.

[FR Doc. 00–28920 Filed 11–9–00; 8:45 am]

BILLING CODE 6717–01–P

DEPARTMENT OF ENERGY

Federal Energy Regulatory Commission

[Docket No. ER97–4185–001, et al.]

Texas-New Mexico Power Company, et al. Electric Rate and Corporate Regulation Filings

November 3, 2000.

Take notice that the following filings have been made with the Commission.

1. Texas-New Mexico Power Company

[Docket No. ER97–4185–001]

Take notice that on October 31, 2000, Texas-New Mexico Power Company (TNP), tendered for filing with the Commission an amendment to its ''Request for Determination That Updated Market Analysis Is Not Necessary Or, in the Alternative, for Extension of Time'', filed in this proceeding on October 16, 2000. Significantly, the amendment submits the report in lieu of an analysis and omits the request for an extension of time.

Comment date: November 21, 2000, in accordance with Standard Paragraph E at the end of this notice.

2. Dominion Nuclear Marketing III, Inc.

[Docket No. ER97–3746–001]

Take notice that on October 31, 2000, Dominion Nuclear Marketing III, Inc. (DNM III), at the request of the Commission's Staff, DNM III resubmitted its FERC Market-Based Sales Tariff to assure compliance with the Commission's policy regarding the provision of ancillary services at market based rates and also resubmitted its Code of Conduct for Officers and Employees of Dominion Nuclear Marketing III, Inc., to assure compliance with the Commission's pagination guidelines. Also as part of DNM III's filing, the issue date of its tariff sheets was changed to October 31, 2000.

Comment date: November 21, 2000, in accordance with Standard Paragraph E at the end of this notice.

3. Consolidated Edison Company of New York, Inc.

[Docket No. ER01–130–000]

Take notice that on October 31, 2000, Consolidated Edison Company of New York, Inc. (Con Edison), tendered for filing an amendment to its filing of a Supplement to its Rate Schedule FERC 117, an agreement to provide interconnection and transmission service to the Long Island Power Authority (LIPA).

Con Edison states that a copy of this filing has been served by mail upon LIPA.

Comment date: November 21, 2000, in accordance with Standard Paragraph E at the end of this notice.

4. Old Dominion Electric Cooperative

[Docket No. ER01–259–000]

Take notice that on October 31, 2000, Old Dominion Electric Cooperative (Applicant), tendered for filing a Service Agreement between Applicant and Southside Electric Cooperative for service to a single, new delivery point pursuant to the Applicant's previously granted authority to make sales at market-based rates.

Comment date: November 21, 2000, in accordance with Standard Paragraph E at the end of this notice.

5. American Transmission Systems, Inc.

[Docket No. ER01–274–000]

Take notice that on October 31, 2000, American Transmission Systems, Inc., tendered for filing a Supplement adding new transmission customers to the Service Agreement and Operating Agreement for Network Integration Transmission Service provided by American Transmission System, Inc. to American Municipal Power-Ohio, Inc. (AMP-Ohio) on behalf of certain designated municipal electric systems in Ohio and Pennsylvania. The Supplement does not modify the terms and conditions of the existing Network Agreements between American Transmission Systems, Inc. and AMP-Ohio.

American Transmission Systems, Inc. requests an effective date of October 1, 2000 for the Supplement.

Copies of this filing have been served on the utility commissions in Ohio and Pennsylvania.

Comment date: November 21, 2000, in accordance with Standard Paragraph E at the end of this notice.

6. Western Systems Coordinating Council

[Docket No. ER01–275–000]

Take notice that on October 31, 2000, the Western Systems Coordinating Council (WSCC), tendered for filing with the Commission amendments to the Reliability Criteria Agreement and the individual Reliability Management System Agreements under the WSCC's Reliability Management System. The amendments correct several problems with the original agreements, and add four new reliability criteria to the program.

The WSCC requests that the Commission make such amendments effective November 1, 2000.

Comment date: November 21, 2000, in accordance with Standard Paragraph E at the end of this notice.

7. Pacific Gas and Electric Company

[Docket No. ER01–276–000]

Take notice that on October 31, 2000, Pacific Gas and Electric Company (PG&E), tendered for filing a revised and amended Coordinated Operations Agreement (Revised COA) between itself, Southern California Edison Company (SCE) and SDG&E (''SDG&E'')

and each California-Oregon Transmission Project (COTP) Participant. The proposed revisions modify the existing Coordinated Operations Agreement of PG&E, PG&E Rate Schedule FERC No. 146.

Copies of this filing have been served upon SCE, SDG&E, the COTP Participants, the California Independent System Operator Corporation, and the California Public Utilities Commission.

Comment date: November 21, 2000, in accordance with Standard Paragraph E at the end of this notice.

8. Alcoa Power Generating Inc.

[Docket No. ER01–287–000]

Take notice that on October 31, 2000, Alcoa Power Generating Inc. (APGI), tendered for filing a long-term agreement between Aquila Energy Marketing Corporation (Aquila) and APGI under APGI's Market Rate Tariff No. 1 (MR–1). This Tariff was accepted for filing by the Commission on July 13, 1999 in Docket No. ER99–2932–000.

The service agreement with Aquila is proposed to be effective October 1, 2000.

Comment date: November 21, 2000, in accordance with Standard Paragraph E at the end of this notice.

9. Idaho Power Company

[Docket No. ER01–288–000]

Take notice that on October 31, 2000, Idaho Power Company (IPC), tendered for filing with the Federal Energy Regulatory Commission a Service Agreement under Idaho Power Company FERC Electric Tariff No. 6, Market Rate Power Sales Tariff, between Idaho Power Company and ENMAX Energy Corporation.

Comment date: November 21, 2000, in accordance with Standard Paragraph E at the end of this notice.

10. WPS Resources Operating Companies

[Docket No. ER01–289–000]

Take notice that on October 31, 2000, WPS Resources Operating Companies (WPS), tendered for filing modifications to its Open Access Transmission Tariff (OATT), FERC Electric Tariff, Volume No. 1, WPS is deleting provisions for transmission service over the facilities of its operating company Wisconsin Public Service Corporation (WPSC) and the provision of Schedule 1 Service. WPS states that WPSC's transmission facilities will be transferred to the American Transmission Company, LLC as of January 1, 2001. No change is being made to the OATT provisions relating to Ancillary Service Schedules 2 through 6 or distribution service in the WPSC control area or to any of the tariff services offered within the control area or transmission system of WPS' other operating company, Upper Peninsula Power Company.

WPS requests that its revised OATT be made effective January 1, 2001.

Copies of the filing were served upon WPS's OATT customers, the ATCLLC, the Public Service Commission of Wisconsin and the Michigan Public Service Commission.

Comment date: November 21, 2000, in accordance with Standard Paragraph E at the end of this notice.

11. San Diego Gas & Electric Company

[Docket No. ER01–290–000]

Take notice that on October 31, 2000, San Diego Gas & Electric Company (SDG&E), tendered for filing an unexecuted Service Agreement between SDG&E and the City of Escondido (the City) for service under SDG&E Open Access Distribution Tariff (OATD). SDG&E states that it tenders the Service Agreement to assure that service under the OATD is available to the City January 1, 2001, the date on which the existing Power Sale Agreement between SDG&E and the City terminates.

Copies of this filing have been served upon the California Public Utilities Commission and the City.

Comment date: November 21, 2000, in accordance with Standard Paragraph E at the end of this notice.

12. ISO New England Inc.

[Docket No. ER00–395–004]

Take notice that on October 27, 2000, ISO New England Inc., tendered for filing its quarterly Index of Customers for its Tariff for Transmission Dispatch and Power Administration Services in accordance with the procedure specified in its filing letter in Docket No. ER00–395–000 dated November 1, 1999, and approved by Commission order issued December 30, 1999.

Comment date: November 17, 2000, in accordance with Standard Paragraph E at the end of this notice.

13. Pacific Gas and Electric Company

[Docket No. ER01–298–000]

Take notice that on October 31, 2000, Pacific Gas and Electric Company (PG&E), tendered for filing a conformed ''Agreement between Pacific Gas and Electric Company and City and County of San Francisco,'' Revised PG&E Rate Schedule FERC No. 114 (1987 Agreement) and the Small Facilities Authorization Letter No. 5, submitted pursuant to the Procedures for Implementation (Procedures) of Section 3.3 of the 1987 Agreement between PG&E and the City and County of San Francisco (City). This is PG&E's fourth quarterly filing submitted pursuant to Section 4 of the Procedures, which provides for the quarterly filing of Facilities Authorization Letters.

The Facilities Authorization Letter streamlines the procedures for filing numerous Facilities, and facilitates payment of PG&E's costs of designing, constructing, procuring, testing, placing in operation, owning, operating and maintaining the customer-specific Facilities required for firm transmission and distribution service requested by City under this Facilities Authorization Letter. PG&E has requested certain waivers.

Copies of this filing have been served upon City and the CPUC.

Comment date: November 21, 2000, in accordance with Standard Paragraph E at the end of this notice.

Standard Paragraphs:

E. Any person desiring to be heard or to protest such filing should file a motion to intervene or protest with the Federal Energy Regulatory Commission, 888 First Street, NE., Washington, DC 20426, in accordance with Rules 211 and 214 of the Commission's Rules of Practice and Procedure (18 CFR 385.211 and 385.214). All such motions or protests should be filed on or before the comment date. Protests will be considered by the Commission in determining the appropriate action to be taken, but will not serve to make protestants parties to the proceeding. Any person wishing to become a party must file a motion to intervene. Copies of these filings are on file with the Commission and are available for public inspection. This filing may also be viewed on the Internet at http://www.ferce.fed.us/ online/rims.htm (call 202–208–2222 for assistance).

David P. Boergers,

Secretary.

[FR Doc. 00–28876 Filed 11–9–00; 8:45 am]

BILLING CODE 6717–01–M

DEPARTMENT OF ENERGY

Federal Energy Regulatory Commission

[Docket No. RP99–301–009]

ANR Pipeline Company; Notice of Proposed Changes in FERC Gas Tariff

November 6, 2000.

Take notice that on October 31, 2000, ANR Pipeline Company (ANR) tendered for filing, as part of its FERC Gas Tariff, Second Revised Volume No. 1, the

following tariff sheets proposed to become effective November 1, 2000:

First Revised Sheet No. 14B
First Revised Sheet No. 14F
First Revised Sheet No. 14L

ANR is filing the attached tariff sheets to reflect a change in the negotiated rate contracts with Wisconsin Public Service Corporation (WPSC). WPSC is increasing its MDQ under its Marshfield contract 5500 by 68 dth/d, and making a corresponding decrease of 68 dth/d to its Joliet Hub contract 104403. Also, WPSC is adjusting its previous annual MDQ level associated with NNS contract 99515, to provide for a seasonal split it the MDQ. Therefore, on an annual basis, there is no change in level of NNS service. ANR requests that the Commission grant ANR any waivers of the Commission's regulations which are necessary in order to make these tariff sheets effective as of November 1, 2000, and to the extent necessary, moves pursuant to 18 CFR 154.7(a)(9) for the tariff sheets to go into effect on said date. Additionally, ANR requests all such further relief as is appropriate.

ANR states that a copy of this filing is being mailed to the affected shipper and to each of ANR's FERC Gas Tariff, Second Revised Volume No. 1 and Original Volume No. 2 customers, and interested State Commissions.

Any person desiring to be heard or to protest said filing should file a motion to intervene or a protest with the Federal Energy Regulatory Commission, 888 First Street, NE., Washington, DC 20426, in accordance with sections 385.214 or 385.211 of the Commission's Rules and Regulations. All such motions or protests must be filed in accordance with section 154.210 of the Commission's Regulations. Protests will be considered by the Commission in determining the appropriate action to be taken, but will not serve to make protestants parties to the proceedings. Any person wishing to become a party must file a motion to intervene. Copies of this filing are on file with the Commission and are available for public inspection in the Public Reference Room. This filing may be viewed on the web at http://www.ferc.fed.us/online/rims.htm (call 202–208–2222 for assistance). Comments and protests may be filed electronically via the internet in lieu of paper. See, 18 CFR 385.2001(a)(1)(iii) and the instructions on the Commission's web site at http://www.ferc.fed.us/efi/doorbell.htm.

David P. Boergers,

Secretary.

[FR Doc. 00–28935 Filed 11–9–00; 8:45 am]

BILLING CODE 6717–01–M

ENVIRONMENTAL PROTECTION AGENCY

[OPP–00439H; FRL–6755–3]

Pesticide Program Dialogue Commitee (PPDC) and Inert Disclosure Stakeholder Workgroup; Notice of Public Meeting

AGENCY: Environmental Protection Agency (EPA).

ACTION: Notice of public meeting.

SUMMARY: The U.S. Environmental Protection Agency (EPA) will hold a public meeting of the Pesticide Program Dialogue Committee (PPDC) on November 29–30, and the PPDC Inert Disclosure Stakeholder Workgroup on November 28, 2000. Agendas for both of these public meetings are under development and will be available by November 20, 2000, on our website at www.epa.gov/pesticides/ppdc/.

DATES: The Inert Disclosure Stakeholder Workgroup meeting will be held on November 28, 2000 from 9 a.m. to 5 p.m. The PPDC meeting will be held on November 29, from 9 a.m. to 5 p.m. and on November 30, from 9 a.m. to 1 p.m.

ADDRESSES: Both public meetings will be held at Radisson Hotel Old Town, 901 North Fairfax Street, Alexandria, VA 22314, telephone number (703) 683–6000.

FOR FURTHER INFORMATION CONTACT: For the PPDC meeting, contact Margie Fehrenbach or Terria Northern, and for the Inert Disclosure Stakeholder Workgroup, contact Cameo Smoot. All are located within the Office of Pesticide Programs, Office of Prevention, Pesticides and Toxic Substances 7501C, U.S. Environmental Protection Agency, 1200 Pennsylvania Ave., NW, Washington, DC 20460; telephone numbers: (703) 308–4775 or (703) 305–7090; fax numbers: (703) 308–4776 or (703) 308–8005; e-mail address: Fehrenbach.Margie@epa.gov, Northern.Terria@epa.gov or Smoot.Cameo@epa.gov.

SUPPLEMENTARY INFORMATION:

I. Does this Action Apply to Me?

This action is directed to the public in general. This action may, however, be of interest to persons who are concerned about implementation of the Food Quality Protection Act (FQPA) (Public Law 104–170) which was passed in 1996 to strengthen the nation's system for regulating pesticides on food; the Federal Insecticide, Fungicide and Rodenticide Act (FIFRA), and the Federal Food, Drug and Cosmetic Act (FFDCA). PPDC was established in 1995 to provide a forum for a diverse group of stakeholders to provide advice and recommendations to EPA regarding pesticide regulatory and policy issues. Since other entities may also be interested, the Agency has not attempted to describe all the specific entities that may be affected by this action. If you have any questions regarding the applicability of this action to a particular entity, consult the persons listed under **FOR FURTHER INFORMATION CONTACT.**

II. How Can I Get Additional Information, Including Copies of this Document and Other Related Documents?

1. *Electronically*. You may obtain electronic copies of this document, and certain other related documents that might be available electronically, from the EPA Internet Home Page at http://www.epa.gov/. To access this document, on the Home Page select ''Laws and Regulations,'' ''Regulations and Proposed Rules,'' and then look up the entry for this document under the ''**Federal Register**—Environmental Documents.'' You can also go directly to the **Federal Register** listings at http://www.epa.gov/fedrgstr/. To access information regarding PPDC, go directly to the Home Page for EPA's Office of Pesticide Programs at http://www.epa.gov/pesticides/ and select ppdc.

2. *In person*. The Agency has established an administrative record for all PPDC meetings and workgroups under docket control number OPP–00439A. The administrative record consists of the documents specifically referenced in this notice, any public comments received during an applicable comment period, and other information related to the PPDC and workgroups, including any information claimed as Confidential Business Information (CBI). This administrative record includes the documents that are physically located in the docket, as well as the documents that are referenced in those documents. The public version of the administrative record, which includes printed, paper versions of any electronic comments that may be submitted during an applicable comment period, is available for inspection in the Public Information and Records Integrity Branch (PIRIB), Rm. 119, Crystal Mall #2, 1921 Jefferson Davis Hwy., Arlington, VA, from 8:30 a.m. to 4 p.m., Monday through Friday, excluding legal holidays. The PIRIB telephone number is (703) 305–5805.

3. *By mail*. You may submit a request to: Public Information and Records Integrity Branch (PIRIB), Information Resources and Services Division (7502C), Office of Pesticide Programs

(OPP), Environmental Protection Agency, 1200 Pennsylvania Ave., NW., Washington, DC 20460.

III. How Can I Request to Participate in this Meeting?

PPDC meetings are open to the public under Section 10(a)(2) of the Federal Advisory Committee Act, Public Law 92–463. Outside statements by observers are welcome. Oral statements will be limited to 3–5 minutes, and it is preferred that only one person per organization present the statement. Any person who wishes to file a written statement may do so before or after a PPDC meeting. These statements will become part of the permanent record and will be provided to PPDC members. The permanent record will be available for public inspection at the address in Section II.2 ''In person'' above. The Agency requests that participants limit their use of fragranced products on behalf of persons attending who have expressed a concern about chemical sensitivity.

IV. Background

PPDC was established as an advisory committee in accordance with the Federal Advisory Committee Act in 1995 for a two–year term; it was renewed in 1997 and again in 1999. The PPDC provides a continuing and transparent forum for a diverse group of stakeholders from across the country to provide advice and recommendations to EPA regarding a broad range of pesticide regulatory development and program implementation issues associated with evaluating and reducing risks from use of pesticides. Membership to the PPDC includes broad geographic representation from the following sectors: environmental/public interest and consumer groups; industry and trade associations; pesticide users; Federal and State/local governments; the general public; academia; and public health organizations.

The Inert Disclosure Stakeholder Workgroup was formed in December 1999 to advise the Pesticide Program Dialogue Committee regarding ways to make information on inert ingredients more available to the public while working within the mandates of the Federal Insecticide, Fungicide and Rodenticide Act and related CBI concerns.

List of Subjects

Environmental protection, Agriculture, Chemicals, Pesticides, Pests, Inert ingredients.

Dated: November 7, 2000.

Joseph J. Merenda Jr.,

Director, Office of Pesticide Programs.

[FR Doc. 00–29052 Filed 11–8–00; 1:56 p.m.]

BILLING CODE 6560–50–S

ENVIRONMENTAL PROTECTION AGENCY

[FRL–6900–2; RIN 2060–AG85]

Waste Characterization Program Documents Applicable to Transuranic Radioactive Waste From the Savannah River Site for Disposal at the Waste Isolation Pilot Plant

AGENCY: Environmental Protection Agency.

ACTION: Notice of availability; opening of public comment period.

SUMMARY: The Environmental Protection Agency (EPA, or ''we'') is announcing the availability of, and soliciting public comments for 30 days on, Department of Energy (DOE) documents applicable to characterization of transuranic (TRU) radioactive waste at the Savannah River Site proposed for disposal at the Waste Isolation Pilot Plant (WIPP). The documents are entitled: ''Savannah River Site WIPP Disposal Program Quality Assurance Project Plan, WSRC–RP–99–01097,'' ''Savannah River Site WIPP Disposal Program Quality Assurance Program Document, WSRC–RP–99–01119,'' and ''Savannah River Site WIPP Disposal Program Waste Certification Plan, WSRC–RP–99–01095.'' They are available for review in the public dockets listed in **ADDRESSES**. We will conduct an inspection of waste characterization systems and processes and the quality assurance program for waste characterization at the Savannah River Site to verify that the site can characterize transuranic waste in accordance with EPA's WIPP compliance criteria. We will perform this inspection during the weeks of November 6 and November 13, 2000. This notice of the inspection and comment period accords with 40 CFR 194.8.

DATES: EPA requests public comment on the documents. Comments must be received by EPA's official Air Docket on or before December 13, 2000.

ADDRESSES: Comments should be submitted to: Docket No. A–98–49, Air Docket, Room M–1500 (LE–131), U.S. Environmental Protection Agency, 1200 Pennsylvania Avenue, N.W., Washington, DC 20460. The DOE documents are available for review in the official EPA Air Docket in Washington, DC, Docket No. A–98–49, Category II–A2, and at the following three EPA WIPP informational docket locations in New Mexico: in Carlsbad at the Municipal Library, Hours: Monday-Thursday, 10 am-9 pm, Friday-Saturday, 10 am-6 pm, and Sunday 1 pm-5 pm; in Albuquerque at the Government Publications Department, Zimmerman Library, University of New Mexico, Hours: vary by semester; and in Santa Fe at the New Mexico State Library, Hours: Monday-Friday, 9 am-5 pm.

As provided in EPA's regulations at 40 CFR part 2, and in accordance with normal EPA docket procedures, if copies of any docket materials are requested, a reasonable fee may be charged for photocopying.

FOR FURTHER INFORMATION CONTACT: Scott Monroe, Office of Radiation and Indoor Air, (202) 564–9310, or call EPA's toll-free WIPP Information Line, 1–800–331–WIPP.

SUPPLEMENTARY INFORMATION:

Background

DOE operates the WIPP near Carlsbad in southeastern New Mexico as a deep geologic repository for disposal of TRU radioactive waste. As defined by the WIPP Land Withdrawal Act (LWA) of 1992 (Public Law 102–579), as amended (Public Law 104–201), TRU waste consists of materials containing elements having atomic numbers greater than 92 (with half-lives greater than twenty years), in concentrations greater than 100 nanocuries of alpha-emitting TRU isotopes per gram of waste. Much of the existing TRU waste consists of items contaminated during the production of nuclear weapons, such as rags, equipment, tools, and sludges.

On May 13, 1998, we announced our final compliance certification decision to the Secretary of Energy (published May 18, 1998, 63 FR 27354). This decision stated that the WIPP will comply with EPA's radioactive waste disposal regulations at 40 CFR part 191, subparts B and C.

The final WIPP certification decision includes conditions that: (1) prohibit shipment of TRU waste for disposal at WIPP from any site other than the Los Alamos National Laboratory (LANL) until EPA determines that the site has established and executed a quality assurance program, in accordance with §§ 194.22(a)(2)(i), 194.24(c)(3), and 194.24(c)(5) for waste characterization activities and assumptions (condition 2 of appendix A to 40 CFR part 194); and (2) prohibit shipment of TRU waste for disposal at WIPP from any site other than LANL until EPA has approved the procedures developed to comply with the waste characterization requirements

of § 194.22(c)(4) (condition 3 of appendix A to 40 CFR part 194). EPA's approval process for waste generator sites is described in § 194.8. As part of our decision-making process, the DOE is required to submit to EPA appropriate documentation of quality assurance and waste characterization programs at each DOE waste generator site seeking approval for shipment of TRU radioactive waste to WIPP. In accordance with § 194.8, we will place such documentation in the official Air Docket in Washington, DC, and informational dockets in the State of New Mexico for public review and comment.

DOE has notified EPA that the Savannah River Site is preparing to ship waste to the WIPP. EPA will perform an inspection of the site's technical and quality assurance programs for waste characterization in accordance with Conditions 2 and 3 of the WIPP certification. The inspection is scheduled to take place the weeks of November 6 and November 13, 2000.

EPA has placed two documents pertinent to the inspection in the public docket described in **ADDRESSES**. The documents are entitled: (1) ''Savannah River Site WIPP Disposal Program Quality Assurance Project Plan, WSRC–RP–99–01097,'' (2) ''Savannah River Site WIPP Disposal Program Quality Assurance Program Document, WSRC–RP–99–01119,'' and (3) ''Savannah River Site WIPP Disposal Program Waste Certification Plan, WSRC–RP–99–01095'' (Item II–A2–28). In accordance with 40 CFR 194.8, as amended by the final certification decision, we are providing the public 30 days to comment on these documents.

If we determine as a result of the inspection that the proposed processes and programs at the Savannah River Site adequately control the characterization of transuranic waste, we will notify DOE by letter and place the letter in the official Air Docket in Washington, DC, as well as in the informational docket locations in New Mexico. A letter of approval will allow DOE to ship transuranic waste from the Savannah River Site to the WIPP. We will not make a determination of compliance prior to the inspection or before the 30-day comment period has closed.

Information on the certification decision is filed in the official EPA Air Docket, Docket No. A–93–02 and is available for review in Washington, DC, and at three EPA WIPP informational docket locations in New Mexico. The dockets in New Mexico contain only major items from the official Air Docket in Washington, DC, plus those documents added to the official Air Docket since the October 1992 enactment of the WIPP LWA.

Dated: October 30, 2000.

Robert Perciasepe,

Assistant Administrator for Air and Radiation.

[FR Doc. 00–28957 Filed 11–9–00; 8:45 am]

BILLING CODE 6560–50–P

ENVIRONMENTAL PROTECTION AGENCY

[FRL–6900–3]

Proposed Settlement Agreements on Regulations Under Section 126 of the Clean Air Act Reducing Regional Transport of Ozone

AGENCY: Environmental Protection Agency (EPA).

ACTION: Notice.

SUMMARY: EPA hereby gives notice of three proposed Settlement Agreements regarding certain issues in the case entitled *Appalachian Power* v. *EPA,* Nos. 99–1200, *et al.* (D.C. Cir.). Specifically, the Settlement Agreements address issues in the following cases, consolidated with *Appalachian Power* v. *EPA: Weyerhaeuser Co.* v. *EPA,* No. 00–1126; *West Virginia Manufacturers Ass'n, et al.* v. *EPA,* Nos. 99–1246 & 00–1125; *West Virginia Chamber of Commerce et al.* v. *EPA,* Nos. 99–1205 & 00–1024; *Birchwood Power Partners, et al.* v. *EPA,* No. 00–1116; *Southern Energy Gen. L.L.C.* v. *EPA,* No. 00–1117. EPA issues this notice in accordance with section 113(g) of the Clean Air Act, as amended (the ''ACT''), which requires EPA to give notice and provide an opportunity for public comment on proposed settlement agreements.

The litigation concerns EPA's promulgation of two final rules under section 126 of the Act (collectively the ''section 126 rule'') pertaining to control of interstate transport of ozone. See 64 FR 28250 (May 25, 1999); 65 FR 2674 (January 18, 2000). Under the section 126 rule, certain upwind stationary sources of nitrogen oxides (No_X) emissions in twelve states and the District of Columbia must hold NO_X emission allowances equivalent to the quantity of their NO_X emissions. The section 126 rule allocates quantities of NO_X allowances to each covered source. Various parties have filed petitions for review of the section 126 rule under section 307(b)(1) of the Act. Several of these parties have raised claims that EPA incorrectly allocated NO_X allowances to certain units under the section 126 rule and that the parties did not have the opportunity to comment on the incorrect allocations during the rulemaking process. The proposed Settlement Agreements provide that EPA will propose a rule to modify the allowance allocations for certain units and that the parties will dismiss these claims if EPA issues a final rule consistent with the proposed rule.

Persons who were not named as parties or interveners to this litigation may submit written comments on the proposed settlement agreement to EPA. EPA will accept such comments for a period of thirty days from the date of publication of this notice. EPA or the Department of Justice may withhold or withdraw consent to the proposed Settlement Agreement if the comments disclose facts or circumstances that indicated that the agreement is inappropriate, improper, inadequate, or inconsistent with the requirements of the Act. Unless EPA or the Department of Justice makes such a determination following the comment period, EPA will take the actions set forth in the Settlement Agreement.

A copy of the proposed Settlement Agreement is available from Phyllis Davis, Air and Radiation Law Office (2344A), Office of General Counsel, U.S. Environmental Protection Agency, Ariel Rios Building, 1200 Pennsylvania Avenue, NW., Washington, DC 20460, (202) 564–5566. Written comments should be sent to Alexandra Teitz, Esq., at the above address and must be submitted on or before December 13, 2000.

Dated: October 31, 2000.

Anna Wolgast,

Acting General Counsel.

[FR Doc. 00–28958 Filed 11–9–00; 8:45 am]

BILLING CODE 6560–50–M

ENVIRONMENTAL PROTECTION AGENCY

[FRL–6900–1]

Clean Water Act Section 303(d): Availability of Total Maximum Daily Loads (TMDLs)

AGENCY: Environmental Protection Agency (EPA).

ACTION: Notice of availability.

SUMMARY: This notice announces the availability for comment of the administrative record file for nine TMDLs prepared by EPA Region 6 for waters listed in Louisiana's Mermentau and Vermilion/Teche river basins, under section 303(d) of the Clean Water Act (CWA). EPA prepared these TMDLs in response to a Court Order dated October 1, 1999, in the lawsuit *Sierra*

Club, et al. v. *Clifford et al.,* No. 96–0527, (E.D. La. Oct. 1, 1999). Under this court order, EPA is required to prepare TMDLs when needed for waters on the Louisiana 1998 section 303(d) list by December 31, 2007.

DATES: Comments on the nine TMDLs must be submitted in writing to EPA on or before December 13, 2000.

ADDRESSES: Comments on the nine TMDLs should be sent to Ellen Caldwell, Environmental Protection Specialist, Water Quality Protection Division, U.S. Environmental Protection Agency Region 6, 1445 Ross Ave., Dallas, TX 75202–2733. For further information, contact Ellen Caldwell at (214) 665–7513. The administrative record file for these TMDLs is available for public inspection at this address as well. Copies of the TMDLs and their respective calculations may be viewed at www.epa.gov/region6/water/tmdl.htm, or obtained by calling or writing Ms. Caldwell at the above address. Please contact Ms. Caldwell to schedule an inspection.

FOR FURTHER INFORMATION CONTACT: Ellen Caldwell at (214) 665–7513.

SUPPLEMENTARY INFORMATION: In 1996, two Louisiana environmental groups, the Sierra Club and Louisiana Environmental Action Network (plaintiffs), filed a lawsuit in Federal Court against the United States Environmental Protection Agency (EPA), styled *Sierra Club, et al.* v. *Clifford et al.,* No. 96–0527, (E.D. La. Oct. 1, 1999). Among other claims, plaintiffs alleged that EPA failed to establish Louisiana TMDLs in a timely manner. Discussion of the court's order may be found at 65 FR 54032 (September 6, 2000).

EPA Seeks Comments on Nine TMDLs

By this notice EPA is seeking comment on the following nine TMDLs for waters located within the Mermentau and Vermilion/Teche basins:

Subsegment	Waterbody name	Pollutant
050703	White Lake	Total Dissolved Solids.
050703	White Lake	Chloride.
060801	Vermilion River—Headwaters To Bayou Fusilier Bourbeaux Junction to New Flanders	Sulfate.
060802	Vermilion River—From New Flanders to Intracoastal Waterway	Sulfate.
060205	Bayou Teche—Headwaters at Bayou Courtableau to I–10	Sulfate.
060205	Bayou Teche—Headwaters at Bayou Courtableau to I–10	Chloride.
060101	Bayou Cocodrie	Total Dissolved Solids.
060206	Indian Creek Reservoir	Temperature.
060102	Bayou Cocodrie	Total Dissolved Solids.

EPA requests that the public provide to EPA any water quality related data and information that may be relevant to the calculations for these TMDLs, or any other comments relevant to these TMDLs. EPA will review all data and information submitted during the public comment period and revise the nine TMDLs where appropriate. EPA will then forward the TMDLs to the Court and the Louisiana Department of Environmental Quality (LDEQ). LDEQ will incorporate the TMDLs into its current water quality management plan.

Dated: October 20, 2000.

Jayne Fontenot,

Acting Director, Water Quality Protection Division, Region 6.

[FR Doc. 00–28956 Filed 11–9–00; 8:45 am]

BILLING CODE 6560–50–U

FEDERAL COMMUNICATIONS COMMISSION

Notice of Public Information Collection(s) Being Reviewed by the Federal Communications Commission for Extension Under Delegated Authority, Comments Requested

November 1, 2000.

SUMMARY: The Federal Communications Commission, as part of its continuing effort to reduce paperwork burden invites the general public and other Federal agencies to take this opportunity to comment on the following information collection(s), as required by the Paperwork Reduction Act of 1995, Public Law 104–13. An agency may not conduct or sponsor a collection of information unless it displays a currently valid control number. No person shall be subject to any penalty for failing to comply with a collection of information subject to the Paperwork Reduction Act (PRA) that does not display a valid control number. Comments are requested concerning (a) whether the proposed collection of information is necessary for the proper performance of the functions of the Commission, including whether the information shall have practical utility; (b) the accuracy of the Commission's burden estimate; (c) ways to enhance the quality, utility, and clarity of the information collected; and (d) ways to minimize the burden of the collection of information on the respondents, including the use of automated collection techniques or other forms of information technology.

DATES: Written comments should be submitted on or before January 12, 2001. If you anticipate that you will be submitting comments, but find it difficult to do so within the period of time allowed by this notice, you should advise the contact listed below as soon as possible.

ADDRESSES: Direct all comments to Les Smith, Federal Communications Commission, Room 1 A–804, 445 Twelfth Street, SW., Washington, DC 20554 or via the Internet to lesmith@fcc.gov.

FOR FURTHER INFORMATION CONTACT: For additional information or copies of the information collections contact Les Smith at (202) 418–0217 or via the Internet at lesmith@fcc.gov.

SUPPLEMENTARY INFORMATION: *OMB Approval No.:* 3060–0492.

Title: Section 74.992 Access to channels licensed to wireless cable entities.

Form No.: FCC 330.

Type of Review: Extension of currently approved collection.

Respondents: Business or other for-profit, State, Local or Tribal Government.

Number of Respondents: 10.

Estimated Hours Per Response: 3.5 hours (These hours include the contracting hour cost (2 hours) to the respondents and the respondents hour burden (1.5 hours).

Frequency of Response: On occasion.

Cost to Respondents: $4,000.

Estimated Total Annual Burden: 15 hours.

Needs and Uses: Section 74.992 requires that requests by ITFS entities for access to wireless cable facilities licensed on ITFS frequencies be made by filing FCC Form 330 (3060–0062), Sections I (Identity of applicant, requested facilities), II (legal qualifications of applicant), III (Financial qualifications of applicant)

and IV (ITFS service proposal). The application must include a cover letter clearly indicating that the application is for ITFS access to a wireless cable entity's facilities on ITFS channels. Section 74.992(d) requires an ITFS user to provide a wireless cable licensee with its planned schedule of use four months in advance of accessing the channels. This notice is completed before the filing of the application and the burden is included with the application. The data is used by FCC staff to determine eligibility of an educational institution or entity demanding access for ITFS use on a wireless cable facility. The four month advance notice is used by the wireless cable licensee to allow it to move programming to other channels.

OMB Approval No.: 3060–0494.

Title: Section 74.990 Use of available instructional television fixed service frequencies by wireless cable entities.

Form No.: n/a.

Type of Review: Extension of currently approved collection.

Respondents: Business or other for-profit, State, Local or Tribal Government.

Number of Respondents: 100.

Estimated Hours Per Response: 0.33 hours–2 hours (These hours include the contracting hour cost to the respondents and the respondents hour burden).

Frequency of Response: On occasion.

Cost to Respondents: $11,250.

Estimated Total Annual Burden: 42 hours.

Needs and Uses: Section 74.990(c) requires applicants to confirm their unopposed status after the period for filing competing applications and petitions to deny has passed. This confirmation is accomplished through the filing of a letter with the Commission. Section 74.990(d) requires a wireless cable applicant to show that there are no multipoint distribution service or multichannel multipoint distribution service channels available for application, purchase or lease that could be used in lieu of the instructional television fixed service frequencies applied for. The data provided in the showing will be used by FCC staff to insure that proposals to operate a wireless cable system on ITFS channels do not impair or restrict any reasonably foreseeable ITFS use.

OMB Approval No.: 3060–0493.

Title: Section 74.986 Involuntary ITFS station modifications.

Form No.: FCC 330.

Type of Review: Extension of currently approved collection.

Respondents: Businesses or other for-profit, State, Local or Tribal Government.

Number of Respondents: 25.

Estimated Hours Per Response: 5 hours (These hours include the contracting hour cost (1 hour) to the respondents and the respondents hour burden (4 hours)).

Frequency of Response: On occasion.

Cost to Respondents: $16,250.

Estimated Total Annual Burden: 25 hours.

Needs and Uses: Section 74.986 requires that an application for involuntary modification of an ITFS station be filed on FCC Form 330 (3060–0062) but need not fill out Section II (legal qualifications). The application must include a cover letter clearly indicating that the modification is involuntary and identifying the parties involved. The data is used by FCC staff to insure that proposals to modify facilities of ITFS licensees/permittees would provide comparable ITFS service and would otherwise serve the public interest in promoting the MMDS service.

Federal Communications Commission.

Magalie Roman Salas,

Secretary.

[FR Doc. 00–28890 Filed 11–9–00; 8:45 am]

BILLING CODE 6712–01–P

FEDERAL COMMUNICATIONS COMMISSION

Notice of Public Information Collection(s) Being Reviewed by the Federal Communications Commission; Comments Requested

November 1, 2000.

SUMMARY: The Federal Communications Commission, as part of its continuing effort to reduce paperwork burden invites the general public and other Federal agencies to take this opportunity to comment on the following information collection(s), as required by the Paperwork Reduction Act of 1995, Public Law 104–13. An agency may not conduct or sponsor a collection of information unless it displays a currently valid control number. No person shall be subject to any penalty for failing to comply with a collection of information subject to the Paperwork Reduction Act (PRA) that does not display a valid control number.

Comments are requested concerning: (a) Whether the proposed collection of information is necessary for the proper performance of the functions of the Commission, including whether the information shall have practical utility; (b) the accuracy of the Commission's burden estimate; (c) ways to enhance the quality, utility, and clarity of the information collected; and (d) ways to minimize the burden of the collection of information on the respondents, including the use of automated collection techniques or other forms of information technology.

DATES: Written comments should be submitted on or before January 12, 2001. If you anticipate that you will be submitting comments, but find it difficult to do so within the period of time allowed by this notice, you should advise the contact listed below as soon as possible.

ADDRESSES: Direct all comments to Judy Boley, Federal Communications Commission, Room 1–C804, 445 12th Street, SW, DC 20554 or via the Internet to *jboley@fcc.gov.*

FOR FURTHER INFORMATION CONTACT: For additional information or copies of the information collection(s), contact Judy Boley at 202–418–0214 or via the Internet at *jboley@fcc.gov.*

SUPPLEMENTARY INFORMATION:

OMB Control No.: 3060–0950.

Title: Extending Wireless Telecommunications Services to Tribal Lands, WT Docket No. 99–266.

Form No.: FCC Form 601.

Type of Review: Extension of currently approved collection.

Respondents: Business or other for-profit, not-for-profit institutions, state, local or tribal governments.

Number of Respondents: 3,844.

Estimated Time Per Response: 10–190 hours.

Frequency of Response: Recordkeeping requirement, on occasion reporting requirement.

Total Annual Burden: 768,800 hours.

Total Annual Cost: N/A.

Needs and Uses: The Commission adopted WT Docket No. 99–266, Report and Order, which implemented rules and policies to encourage the deployment of wireless services to tribal lands.

A winning bidder seeking a bidding credit to serve a qualifying tribal land within a particular market must: Indicate on the FCC Form 601 that it intends to serve a qualifying tribal land within that market; within 90 days after the filing deadline, amend its FCC Form 601 and attach a certification from the tribal government stating that: (a) The tribal government authorizes the winning bidder to site facilities and provide service on its tribal land; (b) the tribal area to be served by the winner bidder constitutes qualifying tribal land; and (c) the tribal government has not and will not enter into an exclusive contract with the applicant precluding entry by other carriers, and will not unreasonably discriminate among wireless carriers seeking to provide

service on the qualifying land. The winning bidder must also meet additional requirements.

The information will be used to ensure that tribal communities within federally-recognized tribal areas have access to wireless telecommunications services equivalent to that of the nation.

OMB Control No.: 3060–0600.

Title: Application to Participate in a FCC Auction.

Form No.: FCC Form 175.

Type of Review: Extension of currently approved collection.

Respondents: Business or other for-profit, not-for-profit institutions, state, local or tribal governments.

Number of Respondents: 11,000.

Estimated Time Per Response: .25 hours.

Frequency of Response: On occasion reporting requirement.

Total Annual Burden: 2,750 hours.

Total Annual Cost: N/A.

Needs and Uses: This information collection allows the Commission to ascertain whether or not applicants for spectrum have ever been in default on any Commission licenses or have ever been delinquent on any non-tax debt owed to a Federal agency. The information will allow the Commission to determine the amount of the up-front payment to be paid by each applicant and will help ensure that auctions are conducted fairly and efficiently, thereby speeding the flow of payments to the U.S. Treasury and accelerating the provision of wireless service to the public.

OMB Control No.: 3060–0621.

Title: Rules and Requirements for C & F Block Broadband PCS Licenses.

Form No.: FCC Form 175.

Type of Review: Extension of currently approved collection.

Respondents: Individuals or households, business or other for-profit, not-for-profit institutions, state, local or tribal governments.

Number of Respondents: 3,000.

Estimated Time Per Response: .50–20 hours.

Frequency of Response: Recordkeeping requirement, on occasion reporting requirement.

Total Annual Burden: 14,044 hours.

Total Annual Cost: N/A.

Needs and Uses: The Commission's rules require applicants for C & F block broadband PCS Licenses to file information so that the Commission can determine whether the applicants are legally, technically and financially qualified to be licensed and to determine whether applicants claiming different eligibility status are entitled to certain benefits.

OMB Control No.: 3060–0624.

Title: Amendment of the Commission's Rules to Establish New Personal Communications Services, section 24.103(f).

Form No.: FCC Forms 601 and 603.

Type of Review: Extension of currently approved collection.

Respondents: Individuals or households, business or other for-profit, not-for-profit institutions, state, local or tribal governments.

Number of Respondents: 39 respondents; 16 responses.

Estimated Time Per Response: 250 hours.

Frequency of Response: On occasion reporting requirement and five and ten year reporting requirements.

Total Annual Burden: 7,700 hours.

Total Annual Cost: N/A.

Needs and Uses: The information collection requires all narrowband PCS licensees, except for paging response channel licensees, to file materials that show their compliance with the construction requirements of this service. These requirements were adopted to ensure that licensees timely construct their systems and that their systems serve significant areas. This information is used by licensing personnel in the Wireless Telecommunications Bureau to ensure that the spectrum is being utilized effectively.

OMB Control No.: 3060–0767.

Title: Auction Forms and License Transfer Disclosures—Supplement for the Second Report and Order, Order on Reconsideration, and Fifth Notice of Proposed Rulemaking in CC Docket No. 92–297.

Form No.: N/A.

Type of Review: Extension of currently approved collection.

Respondents: Individuals or households, business or other for-profit, not-for-profit institutions, state, local or tribal governments.

Number of Respondents: 22,000.

Estimated Time Per Response: .25–3.75 hours.

Frequency of Response: Recordkeeping requirement, third party disclosure requirement, on occasion reporting requirement.

Total Annual Burden: 762,000 hours.

Total Annual Cost: $45,333,000.

Needs and Uses: The Commission's rules require that small business applicants submit ownership information and gross revenue calculations, and all applicants must submit joint bidding agreements. In the case of default, the FCC retains the discretion to re-auction such licenses. Finally, licensees transferring licenses within three years are required to maintain a file of all documents and contracts pertaining to the transfer. Certification is required for entities dropping out of auction to secure certain ownership interests in participants. The information is used to ensure that applicants are qualified to participate in Commission auctions and to ensure that license winners are entitled to receive small business preferences.

OMB Control No.: 3060–0779.

Title: Amendment to part 90 of the Commission's Rules to Provide for Use of the 220–222 MHz Band by the Private Land Mobile Radio Service, PR Docket No. 89–552.

Form No.: FCC Form 601.

Type of Review: Extension of currently approved collection.

Respondents: Individuals or households, business or other for-profit, not-for-profit institutions, state, local or tribal governments.

Number of Respondents: 27,062 respondents; 31,467 responses.

Estimated Time Per Response: 1–50 hours.

Frequency of Response: Third party disclosure requirement, on occasion reporting requirement.

Total Annual Burden: 112,450 hours.

Total Annual Cost: $28,490,000.

Needs and Uses: This collection includes rules to govern the future operation and licensing of the 220–222 MHz band (220 MHz service). In establishing this licensing plan, the FCC's goal is to establish a flexible regulatory framework that allows for efficient licensing of the 220 MHz service, eliminates unnecessary regulatory burdens, and enhances the competitive potential of the 220 MHz service in the mobile service marketplace. However, as with any licensing and operational plan for radio service, a certain number of regulatory and information burdens are necessary to verify licensee compliance with FCC rules.

OMB Control No.: 3060–0914.

Title: Petition, Pursuant to section 7 of the Act, for a Waiver of the Airborne Cellular Rule, or, in the Alternative, for a Declaratory Ruling.

Form No.: N/A.

Type of Review: Extension of currently approved collection.

Respondents: Business or other for-profit, federal government, state, local or tribal governments.

Number of Respondents: 30.

Estimated Time Per Response: 8 hours.

Frequency of Response: Recordkeeping requirement, on occasion reporting requirement.

Total Annual Burden: 240 hours.

Total Annual Cost: N/A.

Needs and Uses: The Commission resets a waiver of section 22.925 of the Commission's rules in order to permit AirCell and a number of cellular licensees who, jointly entered into resale agreements with AirCell, to furnish system capacity for the provision of cellular service on a secondary, conditional basis to airborne terminal units using AirCell-developed technology for a period of two years. The waiver will allow airborne use of cellular telephones.

Magalie Roman Salas,

Secretary.

[FR Doc. 00–28891 Filed 11–9–00; 8:45 am]

BILLING CODE 6712–01–P

FEDERAL COMMUNICATIONS COMMISSION

Notice of Public Information Collection(s) Being Reviewed by the Federal Communications Commission, Comments Requested

November 3, 2000.

SUMMARY: The Federal Communications Commission, as part of its continuing effort to reduce paperwork burden invites the general public and other Federal agencies to take this opportunity to comment on the following information collection, as required by the Paperwork Reduction Act of 1995, Public Law 104–13. An agency may not conduct or sponsor a collection of information unless it displays a currently valid control number. No person shall be subject to any penalty for failing to comply with a collection of information subject to the Paperwork Reduction Act (PRA) that does not display a valid control number. Comments are requested concerning (a) whether the proposed collection of information is necessary for the proper performance of the functions of the Commission, including whether the information shall have practical utility; (b) the accuracy of the Commission's burden estimate; (c) ways to enhance the quality, utility, and clarity of the information collected; and (d) ways to minimize the burden of the collection of information on the respondents, including the use of automated collection techniques or other forms of information technology.

DATES: Written comments should be submitted on or before January 12, 2001. If you anticipate that you will be submitting comments, but find it difficult to do so within the period of time allowed by this notice, you should advise the contact listed below as soon as possible.

ADDRESSES: Direct all comments to Les Smith, Federal Communications Commission, 445 12th Street, SW, Room 1–A804, Washington, DC 20554 or via the Internet to lesmith@fcc.gov.

FOR FURTHER INFORMATION CONTACT: For additional information or copies of the information collections contact Les Smith at (202) 418–0217 or via the Internet at lesmith@fcc.gov.

SUPPLEMENTARY INFORMATION: *OMB Approval No.:* 3060-0489.

Title: Section 73.37 — Applications for broadcast facilities, showing required.

Form No.: None.

Type of Review: Extension of currently approved collection.

Respondents: Business or other for-profit.

Number of Respondents: 315.

Estimated Hours Per Response: 6–16 hours (These hours include the contracting hour cost to the respondents and the respondents hour burden).

Frequency of Response: On occasion.

Cost to Respondents: $686,250.

Estimated Total Annual Burden: 315 hours.

Needs and Uses: Section 73.37(d) requires an applicant for a new AM broadcast station, or for a major change in an authorized AM broadcast station, to make a satisfactory showing that objectionable interference will not result to an authorized AM station as a condition for its acceptance if new or modified nighttime operation by a Class B station is proposed.

Section 73.37(f) requires applicants seeking facilities modification that would result in spacings that fail to meet any of the separation requirements to include a showing that an adjustment has been made to the radiated signal which effectively results in a site-to-site radiation that is equivalent to the radiation of a station with standard Model I facilities.

The data is used by FCC staff to ensure that objectionable interference will not be caused to other authorized AM stations.

Federal Communications Commission.

Magalie Roman Salas,

Secretary.

[FR Doc. 00–28909 Filed 11–9–00; 8:45 am]

BILLING CODE 6712–01–P

FEDERAL COMMUNICATIONS COMMISSION

[CC Docket No. 92–237; DA 00–2519]

Next Meeting of the North American Numbering Council

AGENCY: Federal Communications Commission.

ACTION: Notice.

SUMMARY: On November 7, 2000, the Commission released a public notice announcing the November 28 and 29, 2000, meeting and agenda of the North American Numbering Council (NANC). The intended effect of this action is to make the public aware of the NANC's next meeting and its agenda.

FOR FURTHER INFORMATION CONTACT: Cheryl Callahan, Designated Federal Officer (DFO) at (202) 418–2320 or cchallaha@fcc.gov. The address is: Network Services Division, Common Carrier Bureau, Federal Communications Commission, The Portals, 445 12th Street, SW, Suite 6A320, Washington, DC 20554. The fax number is: (202) 418–2345. The TTY number is: (202) 418–0484.

SUPPLEMENTARY INFORMATION: Released: November 7, 2000.

The North American Numbering Council (NANC) has scheduled a meeting to be held Tuesday, November 28, 2000, from 8:30 a.m. until 5:00 p.m., and on Wednesday, November 29, from 8:30 a.m., until 12 noon. The meeting will be held at the Federal Communications Commission, Portals II, 445 12th Street, SW, Room TW–C305, Washington, DC.

SUPPLEMENTARY INFORMATION: This meeting is open to members of the general public. The FCC will attempt to accommodate as many participants as possible. The public may submit written statements to the NANC, which must be received two business days before the meeting. In addition, oral statements at the meeting by parties or entities not represented on the NANC will be permitted to the extent time permits. Such statements will be limited to five minutes in length by any one party or entity, and requests to make an oral statement must be received two business days before the meeting. Requests to make an oral statement or provide written comments to the NANC should be sent to Cheryl Callahan at the address under **FOR FURTHER INFORMATION CONTACT,** stated above.

Proposed Agenda

1. Approval of September 19–20 and October 17–18, 2000, meeting minutes.

2. North American Numbering Plan Administration (NANPA) Report. Status

of proposed enterprise services and prices. Numbering Resource Utilization/Forecast Report (NRUF) December 1, 2000, meeting.

3. North American Numbering Plan Administration (NANPA) Oversight Working Group Report. Status of the NANPA selection process, NANPA performance review and presentation of final NRUF Technical Requirements.

4. Numbering Resource Optimization (NRO) Working Group Report. Status of unassigned number porting (UNP) impacts—Ad Hoc Study Group input and Industry Numbering Committee (INC) UNP report.

5. Industry Numbering Committee (INC) Report.

6. Toll Free Access Codes Issue Management Group (IMG) Report.

7. Network Interconnection and Interoperability Forum (NIIF) Resolution of Issue #0173—Toll Free Record Application Performance Guidelines.

8. Local Number Portability Administration (LNPA) Working Group Report. Wireless Number Portability Subcommittee update and status of Third Wireline Wireless Integration Report (revisited).

9. Cost Recovery Working Group Report. Status of the North American Numbering Plan Billing and Collection (NBANC) Billing and Collection (B&C) Agent Technical Requirements.

Wednesday, November 29, 2000

10. Steering Group Report.

11. North American Numbering Plan Billing and Collection (NBANC) Report.

12. Reseller Identification Code (CIC) Issue Management Group Status Report.

13. Limited Liability Corporations (LLCs) and Number Portability Administration Centers (NPAC) activity update.

14. Public Participation (5 minutes each, if any).

15. Other Business.

16. Action Items and Decisions Reached.

Federal Communications Commission

L. Charles Keller,

Chief, Network Services Division, Common Carrier Bureau.

[FR Doc. 00–29029 Filed 11–9–00; 8:45 am]

BILLING CODE 6712–01–P

FEDERAL DEPOSIT INSURANCE CORPORATION

Sunshine Act Meeting; Notice of Agency Meeting

Pursuant to the provisions of the ''Government in the Sunshine Act'' (5 U.S.C. 552b), notice is hereby given that at 10:24 a.m. on Tuesday, November 7, 2000, the Board of Directors of the Federal Deposit Insurance Corporation met in closed session to consider matters relating to the Corporation's personnel, receivership, and supervisory activities.

In calling the meeting, the Board determined, on motion of Vice Chairman Andrew C. Hove, Jr., seconded by Director Ellen S. Seidman (Director, Office of Thrift Supervision), concurred in by Director John D. Hawke, Jr. (Comptroller of the Currency), and Chairman Donna Tanoue, that Corporation business required its consideration of the matters on less than seven days' notice to the public; that no notice earlier than November 3, 2000, of the meeting was practicable; that the public interest did not require consideration of the matters in a meeting open to public observation; and that the matters could be considered in a closed meeting by authority of subsections (c)(2), (c)(4), (c)(6), (c)(8), (c)(9)(A)(ii), (c)(9)(B), and (c)(10) of the ''Government in the Sunshine Act'' (5 U.S.C. 552b(c)(2), (c)(4), (c)(6), (c)(8), (c)(9)(A)(ii), (c)(9)(B), and (c)(10)).

The meeting was held in the Board Room of the FDIC Building located at 550–17th Street, NW., Washington, DC.

Dated: November 8, 2000.

Federal Deposit Insurance Corporation.

James D. LaPierre,

Deputy Executive Secretary.

[FR Doc. 00–29041 Filed 11–8–00; 11:46 am]

BILLING CODE 6714–01–M

FEDERAL EMERGENCY MANAGEMENT AGENCY

[FEMA–3156–EM]

New Jersey; Emergency and Related Determinations

AGENCY: Federal Emergency Management Agency (FEMA).

ACTION: Notice.

SUMMARY: This is a notice of the Presidential declaration of an emergency for the State of New Jersey (FEMA–3156–EM), dated November 1, 2000, and related determinations.

EFFECTIVE DATE: November 1, 2000.

FOR FURTHER INFORMATION CONTACT: Madge Dale, Response and Recovery Directorate, Federal Emergency Management Agency, Washington, DC 20472, (202) 646–3772.

SUPPLEMENTARY INFORMATION: Notice is hereby given that, in a letter dated November 1, 2000, the President declared an emergency under the authority of the Robert T. Stafford Disaster Relief and Emergency Assistance Act (42 U.S.C. 5121 *et seq.*), as follows:

I have determined that the emergency conditions in certain areas of the State of New Jersey, as result of the West Nile Virus on August 5, 2000, and continuing is of sufficient severity and magnitude to warrant an emergency declaration under the Robert T. Stafford Disaster Relief and Emergency Assistance Act, 42 U.S.C. § 5121 *et seq.* (the Stafford Act). I, therefore, declare that such an emergency exists in the State of New Jersey.

You are authorized to provide appropriate assistance for required emergency measures, authorized under Title V of the Stafford Act to save lives, protect property and public health and safety, or to lessen or avert the threat of a catastrophe in the designated areas. Specifically, you are authorized to provide emergency protective measures (Category B) at 75 percent Federal funding for eligible expenses incurred by local governments. This assistance excludes regular time costs for subgrantees' regular employees. In addition, you are authorized to provide such other forms of assistance under Title V of the Stafford Act, as you may deem appropriate.

In order to provide Federal assistance, you are hereby authorized to allocate from funds available for these purposes, such amounts as you find necessary for Federal disaster assistance and administrative expenses. However, pursuant to 42 U.S.C. § 5193(b), Federal assistance under this declaration will be limited to $5 million. In the event the assistance exceeds $5 million, you shall report to Congress on the nature and extent of emergency assistance and shall propose additional legislation if necessary, in accordance with 42 U.S.C. § 5193(b)(3).

Further, you are authorized to make changes to this declaration to the extent allowable under the Stafford Act.

Notice is hereby given that pursuant to the authority vested in the Director of the Federal Emergency Management Agency under Executive Order 12148, I hereby appoint Michael Byrne of the Federal Emergency Management Agency to act as the Federal Coordinating Officer for this declared emergency.

I do hereby determine the following areas of the State of New Jersey to have been affected adversely by this declared emergency:

Atlantic, Bergen, Burlington, Camden, Cape May, Cumberland, Essex, Gloucester, Hudson, Hunterdon, Mercer, Middlesex, Monmouth, Morries, Ocean, Passaic, Salem, Somerset, Sussex, Union, and Warren Counties for assistance as specified in the declaration letter quoted above.

(The following Catalog of Federal Domestic Assistance Numbers (CFDA) are to be used for reporting and drawing funds: 83.537, Community Disaster Loans; 83.538, Cora Brown Fund Program; 83.539, Crisis Counseling; 83.540, Disaster Legal Services Program; 83.541, Disaster Unemployment

Assistance (DUA); 83.542, Fire Suppression Assistance; 83.543, Individual and Family Grant (IFG) Program; 83.544, Public Assistance Grants; 83.545, Disaster Housing Program; 83.548, Hazard Mitigation Grant Program.)

James L. Witt,

Director.

[FR Doc. 00–29005 Filed 11–09–00; 8:45 am]

BILLING CODE 6718–02–P

FEDERAL EMERGENCY MANAGEMENT AGENCY

Open Meeting, Technical Mapping Advisory Council

AGENCY: Federal Emergency Management Agency (FEMA).

ACTION: Notice of teleconference meeting.

SUMMARY: In accordance with section 10(a)(2) of the Federal Advisory Committee Act, 5 U.S.C. App. 1, the Federal Emergency Management Agency gives notice that the following meeting will be held:

Name: Technical Mapping Advisory Council.

Date of Meeting: November 14, 2000.

Place: The FEMA Conference Operator in Washington, DC will administer the teleconference. Individuals interested in participating should call 1–800–320–4330 at the time of the teleconference. Callers will be prompted for the conference code, #17, and they will then be connected through to the teleconference.

Time: 2:00 p.m. to 4:00 p.m., EST.

Proposed Agenda:

1. Call to order.
2. Announcements.
3. Action on minutes from October 2000 teleconference meeting.
4. Review Annual and Year 2000 Report draft text.
5. New business.
6. Adjournment.

Status: This meeting is open to the public.

FOR FURTHER INFORMATION CONTACT: Ms. Sally P. Magee, Federal Emergency Management Agency, 500 C Street SW., room 442, Washington, DC 20472, telephone (202) 646–8242 or by facsimile at (202) 646–4596.

SUPPLEMENTARY INFORMATION: Minutes of the meeting will be prepared and will be available upon request 30 days after they have been approved by the next Technical Mapping Advisory Council meeting in October 2000.

Dated: November 3, 2000.

Michael K. Buckley,

Director, Technical Services Division, Mitigation Directorate.

[FR Doc. 00–29004 Filed 11–09–00; 8:45 am]

BILLING CODE 6718–04–P

DEPARTMENT OF HEALTH AND HUMAN SERVICES

Agency for Healthcare Research and Quality

Nominations of Topics for Evidence-Based Practice Centers (EPCs)

AGENCY: The Agency for Healthcare Research and Quality (AHRQ), formerly AHCPR.

ACTION: Nominations of topics for evidence reports and technology assessments.

SUMMARY: AHRQ invites a fourth round of nominations of topics for evidence reports and technology assessments relating to the prevention, diagnosis, treatment and management of common diseases and clinical conditions, as well as topics relating to organization and financing of health care. AHRQ's previous requests for topic nominations were published in the **Federal Register** on December 23, 1996, November 28, 1997, and May 4, 1999.

DATES: Topic nominations should be submitted by January 12, 2001 in order to be considered for the next group of evidence reports and technology assessments. In addition to timely responses to this request for nominations, AHRQ also accepts topic nominations on an ongoing basis. AHRQ will not reply to individual responses, but will consider all nominations during the selection process. Topics selected will be announced from time to time in the **Federal Register** and AHRQ press releases.

ADDRESSES: Topic nominations should be submitted to Douglas B. Kamerow, M.D., MPH, Director, Center for Practice and Technology Assessment, AHRQ, 6010 Executive Boulevard, Suite 300, Rockville, MD 20852.

FOR FURTHER INFORMATION CONTACT: Jacqueline Besteman, J.D., M.A., Center for Practice and Technology Assessment, AHRQ, 6010 Executive Blvd., Suite 300, Rockville, MD 20852; Phone: (301) 594–4017; Fax: (301) 594–4027; E-mail: jbestema@ahrq.gov.

Arrangement for Public Inspection: All nominations will be available for public inspection at the Center for Practice and Technology Assessment, telephone (301) 594–4015, weekdays between 8:30 a.m. and 5 p.m. (Eastern time).

SUPPLEMENTARY INFORMATION:

1. Background

Under Title IX of the Public Health Service Act (42 U.S.C. 299a–299c) as amended by Pub. L. 106–129 (1999), AHRQ is charged with enhancing the quality, appropriateness, and effectiveness of health care services and access to such services. AHRQ accomplishes these goals through scientific research and through promotion of improvements in clinical practice and health systems practices including the prevention of diseases and other health conditions.

2. Purpose

The purpose of this **Federal Register** notice is to encourage participation and collaboration of professional societies, health systems, payors, and providers, with AHRQ as it carries out its mission to promote the practice of evidence-based health care. AHRQ serves as the science partner with private-sector and public organizations in their efforts to improve the quality, effectiveness, and appropriateness of health care delivery in the United States, and to expedite the translation of evidence-based research findings into improved health care services. AHRQ awards task order contracts to its Evidence-based Practice Centers (EPCs) to undertake scientific analyses and evidence syntheses on high-priority topics. The EPCs produce science syntheses—evidence reports and technology assessments—that provide to public and private organizations the foundation for developing and implementing their own practice guidelines, performance measures, educational programs, and other strategies to improve the quality of health care and decision-making related to the effectiveness and appropriateness of specific health care technologies and services. The evidence reports and technology assessments also may be used to inform coverage and reimbursement policies.

As the body of scientific studies related to the organization and financing of health care grows, systematic review and analyses of these studies can provide health system organizations with a scientific foundation for developing system-wide policies and practices. These reports may address and evaluate topics such as risk adjustment methodologies, market performance measures, provider payment mechanisms, and insurance purchasing tools, as well as provider integration of new scientific findings regarding health care and delivery innovations.

Evidence-Based Practice Centers (EPCs)

The EPCs prepare evidence reports and technology assessments on topics for which there is significant demand for information by health care providers, insurers, purchasers, health-related societies, and patient advocacy

organizations. Such topics may include the prevention, diagnosis and/or treatment of particular diseases or health conditions including, where appropriate, the use of alternative/complementary therapies, as well as the appropriate use of commonly provided services, procedures, or technologies. Topics also may include issues related to the organization and financing of care. AHRQ widely disseminates the EPC evidence reports and technology assessments, both electronically and in print. The EPC evidence reports and technology assessments do not include clinical recommendations or recommendations on reimbursement and coverage policies.

Topic Nomination and Selection Process

The AHRQ will review topic nominations and supporting information and determine final topics, seeking additional information as appropriate. AHRQ encourages topic nominations from professional societies and organizations comprised of members of minority populations, as well as nomination of topics that have significant impact on the health status of women, children, ethnic and racial populations. Nominators of selected topics assume the role of Partners to AHRQ and the EPCs. Partners are expected to serve as resources to EPCs as they develop evidence reports and technology assessments. Partners may also serve as peer reviewers of draft evidence reports and assessments.

The processes that AHRQ employs to select topics nominated for analyses by the EPCs is described below. Section A addresses AHRQ's nomination process and selection criteria for clinical topics. Section B addresses AHRQ's nomination process and selection criteria for organization and financing topics.

Section A: Clinical Topics

Nomination Process for Clinical Topics

Nominations of clinical topics for AHRQ evidence reports and technology assessments should focus on specific aspects of prevention, diagnosis, treatment and/or management of a particular condition, or on an individual procedure, treatment, or technology. Potential topics should be carefully defined and circumscribed so that the relevant published literature and other databases can be searched, evidence systematically reviewed, supplemental analyses performed, draft reports and assessments circulated for external peer review, and final evidence reports or technology assessments produced. Reports and assessments can be completed in three to six months, if there is a small volume of literature to be systematically reviewed and analyzed. Some evidence reports and technology assessments may require up to 12 months for completion due to complexity of the topic, the volume of literature to be searched, abstracted, and analyzed, and completion of the external peer review process. Topics selected will not duplicate current and widely available research syntheses, unless new evidence is available that suggests the need for revisions or updates.

For each topic, nominators should provide a rationale and supporting evidence on the clinical relevance and importance of the topic. Nominators also must state their plans are for rapid translation of the evidence reports and technology assessments into clinical guidelines, performance measures, educational programs, or other strategies for strengthening the quality of health care services, or plans to inform development of reimbursement or coverage policies. Nomination information should include.

- Defined condition and target population.
- Three to five specific questions to be answered.
- Incidence or prevalence, and indication of the disease burden (e.g., mortality, morbidity, functional impairment) in the U.S. general population or in subpopulations (e.g., Medicare and Medicaid populations). For prevalence, the number of cases in the U.S. and the number of affected persons per 1,000 persons in the general U.S. population should be provided. For incidence, the number of new cases per 100,000 a year should be provided.
- Costs associated with the clinical condition, including average reimbursed amounts for diagnostic and therapeutic interventions (e.g., average U.S. costs and number of persons who receive care for diagnosis or treatment in a year, citing ICD9–CM and CPT codes, if possible).
- Impact potential of the evidence report or technology assessment to decrease health care costs or to improve health status or clinical outcomes.
- Availability of scientific data and bibliographies of studies on the topic.
- References to significant differences in practice patterns and/or results; alternative therapies and controversies.
- Demonstrated commitment by nominating organization to incorporate the report into its managerial or policy decision making (i.e., rapid translation of the report or assessment into clinical practice guidelines or other quality improvement tools, or to inform reimbursement or coverage policies about a particular technology or service).
- Plans by the nominating organization to measure the impact of the report on clinical practice.

Selection Criteria for Clinical Topics

Factors that will be considered in the selection of clinical topics for AHRQ evidence report and technology assessment topics include: (1) High incidence or prevalence in the general population and in special populations, including women, racial and ethnic minorities, pediatric and elderly populations, and those of low socioeconomic status; (2) significance for the needs of the Medicare, Medicaid and other Federal health programs; (3) high costs associated with a condition, procedure, treatment, or technology, whether due to the number of people needing care, high unit cost of care, or high indirect costs; (4) controversy or uncertainty about the effectiveness or relative effectiveness of available clinical strategies or technologies; (5) impact potential for informing and improving patient or provider decision making; (6) impact potential for reducing clinically significant variations in the prevention, diagnosis, treatment, or clinical management of a disease or condition, or in the use of a procedure or technology, or in the health outcomes achieved; (7) availability of scientific data to support the systematic review and analysis of the topic; (8) demonstrated commitment by the nominating organization to incorporate the report into its managerial or policy decision making; and (9) plans by the nominating organization to measure the impact of the report on clinical practice.

Section B: Organization and Financing Topics

Nomination Process for Organization and Financing Topics

Nominations of organization and financing topics for AHRQ evidence reports should focus on specific aspects of health care organization and finance. Topics should be carefully defined and circumscribed so that relevant databases may be searched, the evidence systematically reviewed, supplemental analyses performed, draft reports circulated in three to six months if there is a small volume of literature for systematic review and analysis. Some evidence reports may require up to 12 months for completion due to the complexity of the topic and the volume of literature to be searched, abstracted, and analyzed. Topics selected will not

duplicate current and widely available research syntheses, unless new evidence is available that suggests the need for revisions or updates.

For each topic, nominators should provide a rationale and supporting evidence on the importance and relevance of the topic. Nominators must also state their plans for use of the evidence report and indicate how the report could be used by public and private decision makers. Nomination information should include:

- Defined organizational/financial arrangement or structure impacting quality, outcomes, cost, access or use.
- Three to five specific questions to be answered.
- If appropriate, description of how the organizational/financial arrangement or structure is particularly relevant to delivery of care for specific vulnerable populations (e.g., children, persons with chronic disease) or certain communities (e.g., rural markets).
- Costs potentially affected by the organizational/financial arrangement, to the extent they can be quantified.
- Impact potential of the evidence report to decrease health care costs or to improve health status or outcomes.
- Availability of scientific and/or administrative data and bibliographies of studies on the topic.
- References to significant variation in delivery and financing patterns and/or results, and related controversies.
- Nominator's plan for use of an evidence report on this topic.
- Nominator's plan for measuring the impact of the report on practice.

Selection Criteria for Organization and Financing Topics

Factors that will be considered in the selection of topics related to the organization and financing of care include the following: (1) Uncertainty about the impact of the subject organizational or financing strategy; (2) potential for the subject organizational or financing strategy or the proposed research synthesis to significantly impact aggregate health care costs; (3) policy-relevant to Medicare, Medicaid, and/or other Federal and State health programs; (4) relevant to vulnerable populations, including racial and ethnic minorities, and particular communities, such as rural markets; (5) available scientific data to support systematic review and analysis of the topic; (6) demonstrated commitment by the nominating organization to incorporate the report into its managerial or policy decision-making; and (7) plans by the nominating organization to measure the impact of the report on practice.

Dated: November 2, 2000.

John M. Eisenberg,

Director.

[FR Doc. 00–28896 Filed 11–9–00; 8:45 am]

BILLING CODE 4160–90–M

DEPARTMENT OF HEALTH AND HUMAN SERVICES

Centers for Disease Control and Prevention

Board of Scientific Counselors, National Center for Infectious Diseases: Meeting

In accordance with section 10(a)(2) of the Federal Advisory Committee Act (Pub. L. 92–463), the Centers for Disease Control and Prevention (CDC) announces the following committee meeting.

Name: Board of Scientific Counselors, National Center for Infectious Diseases (NCID).

Times and Dates: 9 a.m.–5:45 p.m., December 7, 2000, 8:30 a.m.–2:30 p.m., December 8, 2000.

Place: CDC, Roybal Building 17 Conference Room, 1600 Clifton Road, Atlanta, Georgia 30333.

Status: Open to the public, limited only by the space available.

Purpose: The Board of Scientific Counselors, NCID, provides advice and guidance to the Director, CDC, and Director, NCID, in the following areas: program goals and objectives; strategies; program organization and resources for infectious disease prevention and control; and program priorities.

Matters to be Discussed: Agenda items will include:

1. Opening Session: NCID Update
2. CDC Facilities Master Plan, Fort Collins, Colorado
3. Program Update: Patient Safety and Quality Care
4. Issue Updates
   a. NCID Research Agenda
   b. Planning and Communication Strategies
   c. Global Infectious Disease Strategic Plan
5. Tour of Roybal Building 17
6. Breakout groups on Issue Updates (Item 4, a–c above)
7. Program Update: West Nile Virus
8. Breakout Group Report/Discussion: NCID Research Agenda
9. Breakout Group Report/Discussion: Planning and Communication Strategies
10. Breakout Group Report/Discussion: Global Infectious Disease Strategic Plan
11. Late Breakers: Scientific Outbreak Reports
12. Discussions and Recommendations

Other agenda items include announcements/introductions; follow-up on actions recommended by the Board May 2000; consideration of future directions, goals, and recommendations.

Agenda items are subject to change as priorities dictate.

Written comments are welcome and should be received by the contact person listed below prior to the opening of the meeting.

CONTACT PERSON FOR MORE INFORMATION: Diane S. Holley, Office of the Director, NCID, CDC, Mailstop C–20, 1600 Clifton Road, NE, Atlanta, Georgia 30333, email *dsy1@cdc.gov*; telephone 404/639–0078.

The Director, Management Analysis and Services office has been delegated the authority to sign Federal Register notices pertaining to announcements of meetings and other committee management activities, for both the Centers for Disease Control and Prevention and the Agency for Toxic Substances and Disease Registry.

Dated: November 6, 2000.

Carolyn J. Russell,

Management Analysis and Services Office, Centers for Disease Control and Prevention.

[FR Doc. 00–28898 Filed 11–9–00; 8:45 am]

BILLING CODE 4163–18–P

DEPARTMENT OF HEALTH AND HUMAN SERVICES

Centers for Disease Control and Prevention

Board of Scientific Counselors, National Institute for Occupational Safety and Health: Meeting

In accordance with section 10(a)(2) of the Federal Advisory Committee Act (Pub.L. 92–463), the Centers for Disease Control and Prevention (CDC) announces the following committee meeting:

Name: Board of Scientific Counselors, National Institute for Occupational Safety and Health (BSC, NIOSH).

Time and Date: 9 a.m.–3:30 p.m., November 28, 2000.

Place: The Washington Court, 525 New Jersey Avenue, NW., Washington, DC 20001–1527.

Status: Open to the public, limited only by the space available. The meeting room accommodates approximately 50 people.

Purpose: The BSC, NIOSH is charged with providing advice to the Director, NIOSH on NIOSH research programs. Specifically, the Board shall provide guidance on the Institute's research activities related to developing and evaluating hypotheses, systematically documenting findings, and disseminating results.

Matters To Be Discussed: Agenda items include a report from the Director of NIOSH;

Report from Subcommittee for Agricultural Review; Report on the NORA Risk Assessment Meeting; Interim Report from Subcommittee on Beryllium Research; Vermiculite and Other Potential Asbestos Containing Minerals; NIOSH Activities Under the New DOE Workers' Compensation Program; and future activities of the Board.

Agenda items are subject to change as priorities dictate.

CONTACT PERSON FOR MORE INFORMATION: Kathleen Rest, Ph.D., Executive Secretary, BSC, NIOSH, Centers for Disease Control and Prevention, 200 Independence Avenue, SW., Room 715H, Washington, DC 20201, telephone: 202/401–0721, fax: 202/260–4464, e-mail: krx9@cdc.gov.

The Director, Management Analysis and Services Office has been delegated the authority to sign Federal Register notices pertaining to announcements of meetings and other committee management activities, for both the Centers for Disease Control and Prevention and the Agency for Toxic Substances and Disease Registry.

Dated: November, 6, 2000.

Carolyn J. Russell,

Director, Management Analysis and Services Office, Centers for Disease Control and Prevention.

[FR Doc. 00–28899 Filed 11–9–00; 8:45 am]

BILLING CODE 4163–19–P

DEPARTMENT OF HEALTH AND HUMAN SERVICES

Health Care Financing Administration

[Document Identifier: HCFA–10013]

Agency Information Collection Activities: Submission for OMB Review; Comment Request

AGENCY: Health Care Financing Administration, HHS.

In compliance with the requirement of section 3506(c)(2)(A) of the Paperwork Reduction Act of 1995, the Health Care Financing Administration (HCFA), Department of Health and Human Services, is publishing the following summary of proposed collections for public comment. Interested persons are invited to send comments regarding this burden estimate or any other aspect of this collection of information, including any of the following subjects: (1) The necessity and utility of the proposed information collection for the proper performance of the agency's functions; (2) the accuracy of the estimated burden; (3) ways to enhance the quality, utility, and clarity of the information to be collected; and (4) the use of automated collection techniques or other forms of information technology to minimize the information collection burden.

Type of Information Collection Request: New collection; *Title of Information Collection:* Medicare beneficiary line survey; *Form No.:* HCFA–10013 (OMB# 0938–NEW); *Use:* This survey will be used by the Michigan Peer Review Organization to obtain information that will assist it in improving its services; *Frequency:* On occasion; *Affected Public:* Individuals or households; Number of Respondents: 3,600; *Total Annual Responses:* 360; *Total Annual Hours: 90.*

To obtain copies of the supporting statement and any related forms for the proposed paperwork collections referenced above, access HCFA's Web Site address at http://www.hcfa.gov/regs/prdact95.htm, or E-mail your request, including your address, phone number, OMB number, and HCFA document identifier, to Paperwork@hcfa.gov, or call the Reports Clearance Office on (410) 786–1326. Written comments and recommendations for the proposed information collections must be mailed within 30 days of this notice directly to the OMB desk officer: OMB Human Resources and Housing Branch, Attention: Wendy Taylor, New Executive Office Building, Room 10235, Washington, DC 20503.

Dated: October 31, 2000.

John P. Burke III,

HCFA Reports Clearance Officer, HCFA Office of Information Services, Security and Standards Group, Division of HCFA Enterprise Standards.

[FR Doc. 00–28868 Filed 11–9–00; 8:45 am]

BILLING CODE 4120–03–U

DEPARTMENT OF THE INTERIOR

Fish and Wildlife Service

Information Collection Renewal Submitted to the Office of Management and Budget (OMB) for Approval Under the Paperwork Reduction Act

AGENCY: Fish and Wildlife Service, Interior.

ACTION: Information collection; request for comments.

SUMMARY: We are submitting the collection of information described below to OMB for renewal under the provisions of the Paperwork Reduction Act of 1995. If you wish to obtain copies of the proposed information collection requirement, related forms, and/or explanatory material, contact the Information Collection Clearance Officer at the address listed below.

DATES: OMB has up to 60 days to approve or disapprove information collection but may respond after 30 days. Therefore, to ensure maximum consideration, you must submit comments on or before December 13, 2000.

ADDRESSES: Send your comments on the requirement to the Office of Management and Budget, Attention: Department of Interior Desk Officer, 725 17th Street, NW., Washington, DC 20503, and to Rebecca Mullin, Service Information Collection Clearance Officer, U.S. Fish and Wildlife Service, MS 222-ARLSQ, 1849 C Street NW., Washington, DC 20204.

FOR FURTHER INFORMATION CONTACT: Rebecca Mullin, Information Collection Clearance Officer, at (703) 358–2287; rebecca_mullin@fws.gov.

SUPPLEMENTARY INFORMATION: The Office of Management and Budget (OMB) regulations at 5 CFR part 1320, which implement provisions of the Paperwork Reduction Act of 1995 (Pub. L. 104–13), require that interested members of the public and affected agencies have an opportunity to comment on information collection and recordkeeping activities. The U.S. Fish and Wildlife Service plans to submit a request to OMB to renew its approval of the collection of information concerning numbers of double-crested cormorants taken under the Depredation Order (50 CFR 21.47). We are requesting a 3-year term of approval for this information collection activity. A previous 60 day notice was published (July 28, 2000, pages 46488–46489) in the **Federal Register** inviting public comment. One comment was received.

Comments

A letter from the National Aquaculture Association (NAA) stated that although they felt the time burden was underestimated, the burden is justified because the information collection is ''vital to the overall management program.'' NAA also suggested that publishing an on-line summary of the results of the information collection (*i.e.,* the number of cormorants killed under the Depredation Order) would be useful and that online reporting should be considered.

Response

While we do not feel that these comments justify revising the estimated time burden, we will consider the idea of using the internet for information

collection and sharing once OMB approval is completed.

Federal agencies may not conduct or sponsor, and a person is not required to respond to, a collection of information unless it displays a currently valid OMB control number. OMB granted an emergency control number (1018–0097) for this collection of information, which expired in August 1998. The Service is currently in the process of preparing an Environmental Impact Statement and national management plan for the double-crested cormorant and would like to renew the control number so that it may collect relevant biological information from aquaculturists under the terms of the Depredation Order.

The Migratory Bird Treaty Act (16 U.S.C. 703–711) and Fish and Wildlife Act of 1956 (16 U.S.C. 742d) designate the Department of the Interior as the key agency responsible for the management of migratory bird populations frequenting the United States. This responsibility dictates the gathering of accurate data on various characteristics of migratory bird populations. In 1998, we issued a standing Depredation Order that allows persons engaged in the production of commercial freshwater aquaculture stocks in 13 States to take depredating double-crested cormorants at aquacultural facilities. Under the conditions of the Depredation Order, any person exercising such privileges must keep and maintain a monthly log recording the date and number of all cormorants killed each month, maintain the log for a period of 3 years, and make the log available to Federal and State wildlife enforcement officers upon request. The mortality information that these logs provide is necessary for the development of population data and determination of program effectiveness to be used for management purposes.

Title: Depredation Order for the Double-crested Cormorant.

Approval Number: 1018–0097.

Service Form Number: None.

Frequency of Collection: Annually.

Description of Respondents: Businesses, individuals, and State, local, or tribal governments

Total Annual Burden Hours: The total annual burden is estimated at 875 hours.

Total Annual Responses: About 2,200 individuals are expected to complete the required mortality logs and approximately 250 individuals will complete the annual survey (for a total of 2,450).

We invite comments concerning this renewal on: (1) Whether the collection of information is necessary for the proper performance of our migratory bird management functions; (2) the accuracy of our estimate of the burden of the collection of information; (3) ways to enhance the quality, utility, and clarity of the information to be collected; and (4) ways to minimize the burden of the collection of information on respondents.

Dated: November 3, 2000.

Rebecca A. Mullin,

Information Collection Clearance Officer.

[FR Doc. 00–28918 Filed 11–9–00; 8:45 am]

BILLING CODE 4310–55–P

DEPARTMENT OF THE INTERIOR

Fish and Wildlife Service

Notice of Receipt of Applications for Permit

Endangered Species

The following applicants have applied for a permit to conduct certain activities with endangered species. This notice is provided pursuant to section 10(c) of the Endangered Species Act of 1973, *as amended* (16 U.S.C. 1531, *et seq.*):

Applicant: Omaha's Henry Doorly Zoo, Omaha, NE, PRT–032757

The applicant has amended a permit request. The original request for a permit to import 1 captive-born female Sumatran tiger (*Panthera tigris sumatrae*) from the Surabaya Zoo, Indonesia for the purpose of propagation for the enhancement of the survival of the species was published in the **Federal Register** on September 21, 2000. The applicant now requests a permit to import 1 captive-born male and 2 captive-born female Sumatran tigers (*Panthera tigris sumatrae*) from the Surabaya Zoo, Indonesia for the purpose of propagation for the enhancement of the survival of the species.

Applicant: Paul L. Snider, Lewiston, ID, PRT–035504

The applicant requests a permit to import the sport-hunted trophy of one male bontebok (*Damaliscus pygargus dorcas*) culled from a captive herd maintained under the management program of the Republic of South Africa, for the purpose of enhancement of the survival of the species.

Applicant: White Oak Conservation Center, Yulee, FL, PRT–843877

The applicant requests a permit to import up to fifteen captive-held and/or captive-born Visayan deer (*Cervus alfredi*) originating from the Mari-ti Center, Panay, Philippines, for the purpose of enhancement of the survival of the species through captive propagation. The specimens will be shipped to Zoo Zurich, Zurich, Switzerland, for quarantine prior to being imported into the United States.

Applicant: University of Illinois, Chicago, IL PRT–009695

The applicant requests re-issuance of their permit to import samples obtained from Cuban sandhill cranes (*Grus canadensis nesiotes*) in Cuba for the purpose of scientific research. This notification covers activities conducted by the applicant over a five year period.

Marine Mammals

The public is invited to comment on the following application for a permit to conduct certain activities with marine mammals. The application was submitted to satisfy requirements of the Marine Mammal Protection Act of 1972, *as amended* (16 U.S.C. 1361 *et seq.*) and the regulations governing marine mammals (50 CFR 18).

Applicant: Joe Klutsch, King Salmon, AK, PRT–035705

The applicant requests a permit to import a polar bear (*Ursus maritimus*) sport-hunted from the Lancaster Sound polar bear population, Northwest Territories, Canada for personal use.

Written data or comments should be submitted to the Director, U.S. Fish and Wildlife Service, Division of Management Authority, 4401 North Fairfax Drive, Room 700, Arlington, Virginia 22203 and must be received by the Director within 30 days of the date of this publication.

The U.S. Fish and Wildlife Service has information collection approval from OMB through February 28, 2001. OMB Control Number 1018–0093. Federal Agencies may not conduct or sponsor and a person is not required to respond to a collection of information unless it displays a current valid OMB control number.

Documents and other information submitted with these applications are available for review, *subject to the requirements of the Privacy Act and Freedom of Information Act*, by any party who submits a written request for a copy of such documents to the following office within 30 days of the date of publication of this notice: U.S. Fish and Wildlife Service, Office of Management Authority, 4401 North Fairfax Drive, Room 700, Arlington, Virginia 22203. Phone: (703/358–2104); FAX: (703/358–2281).

Dated: November 6, 2000.

Charlie Chandler,

Chief, Branch of Permits, Division of Management Authority.

[FR Doc. 00–28895 Filed 11–9–00; 8:45 am]

BILLING CODE 4310–55–P

DEPARTMENT OF THE INTERIOR

Fish and Wildlife Service

Notice of Availability of a Draft Revised Environmental Assessment/Habitat Conservation Plan Related to Application for an Incidental Take Permit for the Magic Carpet Woods Association Project, Leelanau Township, Leelanau County, Michigan

AGENCY: Fish and Wildlife Service, Interior

ACTION: Notice of availability.

SUMMARY: This notice advises the public and other agencies of the availability for review and comment of a Environmental Assessment/Habitat Conservation Plan (EA/HCP) and Implementing Agreement. On March 29, 2000 Magic Carpet Woods Association (Applicant) applied for an Incidental Take Permit pursuant to section 10(a)(1)(B) of the Endangered Species Act of 1973, as amended (Act, 16 U.S.C. 1531, *et seq.*) from the U.S. Fish and Wildlife Service (Service). This notice is provided pursuant to section 10(c) of the Act and National Environmental Policy Act regulations (40 CFR 1506.6). An April 20, 2000 Notice made available for a permit to authorize the incidental take associated with harassment (*i.e.,* harm) of the pipping plover (*Charadrius melodus;* bird) which is federally listed as endangered. The take would occur as a result of residential construction adjacent to Lake Michigan beachfront in Leelanau Township, Leelanau County, Michigan. That application has been assigned permit number TE–025433.

Copies of the revised EA/HCP and Implementing Agreement may be obtained by making a request to the Regional Office address below. Comments on the EA/HCP must be submitted in writing. All comments received, including names and addresses, will become part of the public record and will be available for review pursuant to section 10(c) of the Act. The comment period is 30 days because the application was received prior to issuance of the ''Five-Point Policy'' (June 1, 2000; 65 FR 35242).

DATES: Written comments must be received on or before COB December 13, 2000.

ADDRESSES: Persons wishing to review the documents may obtain copies by writing, telephoning, fax, or e-mail to either of the two Service positions listed in the following paragraphs. The EA/HCP is also available at the following Internet address: www/midwest.fws.gov/nepa/

Documents will be available for public inspection during normal business hours (8:00–4:30), at the U.S. Fish and Wildlife Service Regional Office in Fort Snelling, Minnesota, and at the East Lansing Field Office in East Lansing, Michigan. Written comments should be submitted to the Regional HCP Coordinator at the address or via FAX listed below. All comments received will become part of the administrative record and may be released to the public. Please refer to permit number TE–025433 when submitting comments.

Regional HCP Coordinator, U.S. Fish and Wildlife Services, 1 Federal Drive, Fort Snelling, MN 55111–4056, Telephone: 612/713–5343, Fax: 612/713–5292

Field Supervisor, U.S. Fish and Wildlife Service, East Lansing Field Office, 2651 Coolidge Rd., Suite 101, East Lansing, Michigan 48823–6316, Telephone: 517/351–2555

FOR FURTHER INFORMATION CONTACT: Mr. Peter Fasbender, Regional HCP Coordinator, U.S. Fish and Wildlife Service, Fort Snelling, Minnesota, telephone (612) 713–5343, or email peter__fasbender@fws.gov.

SUPPLEMENTARY INFORMATION: Section 9 of the Act and federal regulations prohibit ''take'' of fish or wildlife species listed as endangered or threatened. Take of listed fish or wildlife is defined under the Act to mean harass, harm, pursue, hunt, shoot, wound, kill, trap, capture, collect, or to attempt to engage in any such conduct. However, the Service, under limited circumstances, may issue permits to take listed species, provided such take is incidental to, and not the purpose of, an otherwise lawful activity. Regulations governing permits for threatened species are found in 50 CFR 17.32.

Background

The proposed Magic Carpet Woods Association residential construction is located on approximately 91 acres at the north end of Kehl Road in Leelanau Township, Leelanau Township, Leelanau County, Michigan. The beachfront of the property is part of the Lake Michigan Cathead Bay shoreline. Magic Carpet Woods Association is requesting a 25-year incidental take permit for potential take (harassment) of the piping plover on the beach of the Association property. The beach/dune portion of the property is the only part potentially containing piping plover habitat. This area consists of open, unvegetated beach and grassy low dunes that abuts a forested portion. The beach/dune is narrow and averages about 85 feet wide.

Piping plovers have nested in recent years at the adjacent Leelanau State Park, although none nested there or elsewhere in Cathead Bay in 2000. No plovers have been known to nest on or as near as one-half mile of the Association beach, nor have they ever been recorded using the Association beach. The beach currently does not have characteristics of good nesting habitat. There may be potential for plovers to nest on the property in the future if an expanded plover population exhibits variation in acceptable breeding habitat characteristics or natural forces alter current beach characteristics. On July 6, 2000, the Service published a proposal to designate critical habitat for the piping plover. All of the Cathead Bay shoreline is included in a proposed 3.7 mile long unit potentially containing primary constituent elements of critical habitat. The open dune portion of the project site contains several hundred individual Pitcher's thistle (*Cirsium pitcheri*) plants, a threatened species.

Piping plovers are known to be extremely sensitive to disturbance by human activity. Direct and indirect effects of human activity throughout the Great lakes and Atlantic coast breeding range is strongly implicated in the species decline that lead to its listing as an endangered species in 1985. The project involves construction of 13 single family residences within the forested portion of the property adjacent to and parallel with the one-half mile long beach. Broadwalk may be constructed through the vegetated dunes, but otherwise the project will not result in any construction on, or other physical alteration of the beach portion of the property. Construction of the proposed project would result in human activity along a section of beach presently associated with undeveloped land.

Potential take of piping plovers would occur through harassment of adults and chicks. The HCP provides conservation and protective measures to minimize and mitigate such take to a level that will not reduce productivity to slow progress toward recovery. The HCP provides for seasonally restructions of human presence on the beach, control of all pets during the critical nesting and rearing period, control of garbage,

presence during selected periods of a piping plover steward, access to the beach by Service biologists or designees for annual monitoring on the property regardless of whether piping plovers next there, provide funding for a piping plover captive rearing program, and other measures. In the event piping plovers next on the property in the future, nests will be fully protected with predator exclosures, signing, monitoring and all other measures normally taken for next protection on public lands. The presence of Association residence owners is likely to eliminate unregulated trespass on the property. Take that may occur as a result of the permit issued, will not include direct mortality of adults or chicks.

As a result of comments received on the original draft EA/HCP, the Service and Applicant have revised the EA/HCP. The Proposed Action consists of the issuance of an incidental take permit and implementation of the HCP. The revised EA considers four action alternatives and the ''No Action'' Alternative. The NEPA process will be completed after the comment period. After completing the NEPA process, the Service will evaluate the permit application (if appropriate to the selected Alternative), the HCP, and comments submitted thereon to determine whether the application meets the requirements of section 10(a) of the Act. If the requirements are met, the Service will issue a permit to magic Carpet Woods Association for the incidental take of the piping plover from human activity associated with residential development on the Association property. The final permit decision will be made no sooner than 30 days from the date of this notice.

Dated: November 6, 2000.

Charles M. Wooley,

Assistant Regional Director, Ecological Services, Region 3, Fort Snelling, Minnesota.

[FR Doc. 00–28900 Filed 11–9–00; 8:45 am]

BILLING CODE 4310–55–M

DEPARTMENT OF THE INTERIOR

Bureau of Indian Affairs

Base Roll Dated May 2, 1996, Submitted by the Pokagon Band of Potawatomi Indians

AGENCY: Bureau of Indian Affairs, Interior.

ACTION: Notice.

SUMMARY: Pursuant to section 9(b)(2) of Pub. L. 103–323 (108 Stat. 2153), as amended, notice is given for receipt of the May 2, 1996, Base Roll of the Pokagon Band of Potawatomi Indians, containing 2,325 names of tribal members.

FOR FURTHER INFORMATION CONTACT: Anne E. Bolton, Field Representative, Michigan Field Office, 2901.5 I–75 Business Spur, Sault Ste. Marie, Michigan 49783.

SUPPLEMENTARY INFORMATION: This notice is published in the exercise of the authority delegated by the Secretary of the Interior to the Assistant Secretary—Indian Affairs by 209 DM 8. The Base Roll was received at the Bureau of Indian Affairs, Michigan Field Office on May 2, 1996. After review, corrections to the roll were made: eight names were added, three names were removed due to relinquishments, two names removed because of dual enrollment, 41 names that were listed twice were removed, 52 names were removed because of no ancestors on the historical rolls/filed after date of death/insufficient documentation. The corrected Base Roll containing the names of 2,325 tribal members was approved by Tribal Council Resolution #00–04–05–03 and submitted to the Michigan Field Office on May 11, 2000.

Dated: November 2, 2000.

Kevin Gover,

Assistant Secretary—Indian Affairs.

[FR Doc. 00–28982 Filed 11–9–00; 8:45 am]

BILLING CODE 4310–02–P

DEPARTMENT OF THE INTERIOR

Bureau of Land Management

[MT–070–01–1220–DA]

Final Travel Management Plan Decision for the Clancy-Unionville Area

AGENCY: Bureau of Land Management, Interior.

ACTION: Notice of availability of the Record of Decision.

SUMMARY: The Bureau of Land Management (BLM) and the Forest Service completed the Final EIS (FEIS) analysis for the Clancy-Unionville Vegetative Manipulation and Travel Management Project near Helena, Montana and the BLM has finalized its Record of Decision (ROD) for the Travel Management portion of this project. The Decision is to implement Alternative D modified. This preferred alternative restricts wheeled motorized vehicles to designated roads and trails during varying periods of the year to protect vegetation, soils, water quality and wildlife values. Snowmobiles will be allowed across BLM lands south of Jackson Creek from December 2 to May 15 as snow conditions allow.

Five alternatives were considered in response to the identified issues in the Clancy-Unionville Travel Management Plan FEIS. The preferred Alternative D is considered to be the environmentally preferable alternative. The issues and alternatives are described in Chapter II and analyzed in Chapter III of the FEIS.

Alternative D with four minor modifications described in the ROD was selected as the preferred because it best meets the Purpose and Need statements for the Travel Management Plan. This alternative was specifically developed in response to wildlife issues with emphasis given to big game security and winter range protection. In addition, efforts were made to provide a balanced system of designated roads and trails to meet the needs of both motorized and non-motorized users while protecting important natural resources of the area.

BLM lands restricted to motorized travel under this decision are located in

Principal Meridian Montana

T. 8 N., R.3 W., secs. 4–8;
T. 8 N., R.4 W., secs. 1–3, 9, 10, 12–15, 22 and 23;
T. 9 N., R.3 W., secs. 17–20, 23, 26, and 29–33;
T. 9 N., R.4 W., sec. 25; and
T. 10 N, R.4 W., sec. 36.

Travel restrictions for these above lands will be implemented in accordance with the Clancy-Unionville Travel Plan FEIS ROD during the spring of 2001 subject to the appeal process.

A final decision has also been made to amend the Headwaters Resource Management Plan of 1984, in that all three Management Units (8, 23, and 24) within the affected area would be classified as ''Restricted'' to motorized travel and ''Closed'' to permit consideration for organized motor vehicle events. A 30-day protest period was provided for this proposed amendment at the time the FEIS was released to the public and published in the **Federal Register** on March 17, 2000. Six protests were received and all have been resolved.

DATES: This travel plan decision is subject to public appeal. You have the right to appeal to the Board of Land Appeals, Office of the Secretary, in accordance with the regulations of 43 CFR, part 4. In order for your appeal to be considered timely, it must be received by December 13, 2000, which is 30 days from the date of this publishing in the **Federal Register**. If an appeal is taken, you must follow the procedures outlined on Form 1842–1, Information on Taking Appeals to the Board of Land Appeals. The appellant

has the burden of showing that the Decision appealed from is in error.

This Decision will become effective at the expiration of the time for filing a Notice of Appeal unless a petition for a stay of the Decision is timely filed together with a Notice of Appeal. See 43 CFR 4.21(a). The provisions of 43 CFR 4.21(b) define the standards and procedures for filing a petition to obtain a stay pending appeal.

ADDRESSES: Copies of the FEIS Record of Decisions and Form 1842–1 are available at the Butte Field Office, 106 N. Parkmont, Butte, Montana 59701.

FOR FURTHER INFORMATION CONTACT: Brad Rixford of the Butte Field Office at 406–494–5059.

Steve Hartmann,

Acting Butte Field Manager.

[FR Doc. 00–28815 Filed 11–09–00; 8:45 am]

BILLING CODE 4310–DN–P

DEPARTMENT OF THE INTERIOR

Bureau of Land Management

[AZ–010–1430–01; AZA–28743]

Notice of Realty Action; Arizona

AGENCY: Bureau of Land Management, Interior.

ACTION: Notice.

SUMMARY: The following land has been found suitable for direct sale under Section 203 of the Federal Land Policy and Management Act of 1976 (90 Stat. 2750, 43 U.S.C. 1713), at not less than the estimated fair market value of $21,000. The land will not be offered for sale until at least 60 days after the date of this notice.

Gila and Salt River Meridian, Arizona

T. 39 N., R. 7 E.,

Sec. 4, Lots 14, 15, and 18, inclusive.

Containing 22.72 acres.

The land described is hereby segregated from appropriation under the public land laws, including the mining laws, pending disposition of this action or 270 days from the date of publication of this notice, whichever occurs first.

This land is being offered by direct sale to Marble Canyon Company, Marble Canyon, Arizona, who own that portion of the Marble Canyon Airstrip which is located on the subject parcel. The parcel has been leased for airstrip purposes since the early 1950s.

The sale would be for the surface estate only. The patent, when issued, will contain certain reservations to the United States and will be subject to a restrictive covenant to protect scenic values of the area.

DATES: Interested parties may submit comments on or before December 28, 2000 to the Field Manager, Arizona Strip Field Office at the address below. In the absence of timely objections, this proposal shall become the final determination of the Department of the Interior.

ADDRESSES: Detailed information concerning the reservations, as well as, specific conditions of the sale are available for review at the Arizona Strip Field Office, Bureau of Land Management, 345 East Riverside Drive, St. George, Utah 84790.

FOR FURTHER INFORMATION CONTACT: Laurie Ford, Realty Specialist, at the address listed above or phone (435) 688–3271.

Dated: October 31, 2000.

Roger G. Taylor,

Arizona Strip Field Manager.

[FR Doc. 00–28983 Filed 11–9–00; 8:45 am]

BILLING CODE 4310–32–P

DEPARTMENT OF THE INTERIOR

Minerals Management Service

Agency Information Collection Activities: Proposed Collection, Comment Request

AGENCY: Minerals Management Service (MMS), Interior.

ACTION: Notice of an extension of an information collection (OMB Control Number 1010–0061).

SUMMARY: To comply with the Paperwork Reduction Act of 1995, we are soliciting comments on an information collection titled, Oil Transportation Allowance. We will submit an information collection request (ICR) to the Office of Management and Budget (OMB) for review and approval after this comment period closes.

DATES: Submit written comments on or before January 12, 2001.

ADDRESSES: Submit written comments to Connie Bartram, Acting Chief, Regulations and FOIA Team, Minerals Management Service, Minerals Revenue Management, P.O. Box 25165, MS 320B2, Denver, Colorado 80225. If you use an overnight courier service, our courier address is Building 85, Room A–613, Denver Federal Center, Denver, Colorado 80225.

PUBLIC COMMENT PROCEDURE: Submit your comments to the offices listed in the **ADDRESSES** section, or email your comments to us at *MRM.comments@mms.gov.* Include the title of the information collection and the OMB Control Number in the ''Attention'' line of your comment; also, include your name and return address. Submit electronic comments as an ASCII file avoiding the use of special characters and any form of encryption. If you do not receive a confirmation that we have received your email, contact Ms. Bartram at (303) 231–3410, FAX (303) 231–3385. We will post all comments at *http://www.rmp.mms.gov* for public review.

Also, contact Ms. Bartram to review paper copies of the comments. The comments, including names and addresses of respondents, are available for public review during regular business hours at our offices in Lakewood, Colorado. Individual respondents may request that we withhold their home address from the public record, which we will honor to the extent allowable by law. There also may be circumstances in which we would withhold from the public record a respondent's identity, as allowable by law. If you request that we withhold your name and/or address, state this prominently at the beginning of your comment. However, we will not consider anonymous comments. We will make all submissions from organizations or businesses, and from individuals identifying themselves as representatives or officials of organizations or businesses, available for public inspection in their entirety.

FOR FURTHER INFORMATION CONTACT: Dennis C. Jones, Regulations and FOIA Team, phone (303) 231–3046, FAX (303) 231–3385, email *Dennis.C.Jones@mms.gov.* A copy of the ICR will be available to you without charge upon request.

SUPPLEMENTARY INFORMATION:

Title: Oil Transportation Allowance.

OMB Control Number: 1010–0061.

Bureau Form Number: MMS–4110.

Abstract: The Department of the Interior (DOI) is responsible for matters relevant to mineral resource development on Federal and Indian Lands and the Outer Continental Shelf (OCS). The Secretary of the Interior (Secretary) is responsible for managing the production of minerals from Federal and Indian Lands and the OCS; for collecting royalties from lessees who produce minerals; and for distributing the funds collected in accordance with applicable laws. The Secretary also has an Indian trust responsibility to manage Indian lands and seek advice and information from Indian beneficiaries.

The Secretary is required by various laws to manage mineral resources production on Indian lands, collect the royalties due, and distribute the funds

in accordance with those laws. The product valuation and allowance determination process that we conduct on behalf of the Secretary is essential to assuring that Indians receive payment on the proper value of the minerals being removed. When a company or an individual enters into a lease to explore, develop, produce, and dispose of oil from Indian lands, that company or individual (the lessee) agrees to pay the Indian tribe or allottee a share (royalty) of the value received from production from the leased lands.

Royalty rates are specified in an Indian lease agreement. To determine whether the amount of royalty tendered represents the proper royalty due, it is first necessary to establish the proper value of the oil that is being sold or otherwise disposed of in some other manner, as well as the proper costs associated with allowable deductions. The lessee is required to report various kinds of information to the lessor relative to the processing and business transactions associated with the disposition of the leased minerals. In some circumstances, lessees are authorized to deduct from royalty payments the reasonable actual cost of transporting the royalty portion of the oil from an Indian lease to a delivery point remote from the lease. We use transportation allowances as part of the product valuation process to determine if the lessee is reporting and paying the proper royalty amount.

Frequency: On occasion.

Estimated Number and Description of Respondents: 3 companies or individuals entering into Indian leases.

Estimated Annual Reporting and Recordkeeping ''Hour'' Burden: 5 hours.

Estimated Annual Reporting and Recordkeeping ''Non-hour Cost'' Burden: n/a.

Comments: The Paperwork Reduction Act at 44 U.S.C. 3506(c)(2)(A) requires each agency ''to provide notice * * * and otherwise consult with members of the public and affected agencies concerning each proposed collection of information * * *.'' Agencies must specifically solicit comments to: (a) Evaluate whether the proposed collection of information is necessary for the agency to perform its duties, including whether the information is useful; (b) evaluate the accuracy of the agency's estimate of the burden of the proposed collection of information; (c) enhance the quality, usefulness, and clarity of the information to be collected; and (d) minimize the burden on the respondents, including the use of automated collection techniques or other forms of information technology.

The Paperwork Reduction Act also requires agencies to estimate the total annual reporting ''non-hour cost'' burden to respondents or recordkeepers resulting from the collection of information. We have not identified non-hour cost burdens and need to know if there are other costs associated with the collection of this information for either total capital and startup cost components or annual operation, maintenance, and purchase of service components. Your estimates should consider the costs to generate, maintain, and disclose or provide the information. You should describe the methods you use to estimate major cost factors, including system and technology acquisition, expected useful life of capital equipment, discount rate(s), and the period over which you incur costs. Capital and startup costs include, among other items, computers and software you purchase to prepare for collecting information; monitoring, sampling, drilling, and testing equipment; and record storage facilities.

Your estimates should not include equipment or services purchased: (i) before October 1, 1995; (ii) to comply with requirements not associated with the information collection; (iii) for reasons other than to provide information or keep records for the Government; or (iv) as part of customary and usual business or private practices.

The Paperwork Reduction Act provides that an agency shall not conduct or sponsor, and a person is not required to respond to, a collection of information unless it displays a currently valid OMB Control Number.

Dated: October 26, 2000.

Lucy Querques Denett,

Associate Director for Minerals Revenue Management.

[FR Doc. 00–27984 Filed 11–9–00; 8:45 am]

BILLING CODE 4310–MR–P

DEPARTMENT OF THE INTERIOR

National Park Service

Notice of Availability of the Finding of No Significant Impact for the U.S. Park Police (USPP) Aviation Section Hangar and Fuel System Improvements, Washington, DC

ACTION: Notice of availability of the Decision Notice and Finding of No Significant Impact (FONSI) for the U.S. Park Police Aviation Section Hangar and Fuel System Improvements—National Capital Parks—East, Washington, DC.

SUMMARY: Pursuant to the National Environmental Policy Act (NEPA), Council on Environmental Quality regulations, and National Park Service (NPS) guidance, the NPS prepared an environmental assessment (EA) for the construction of an additional aviation hangar and a new fueling station at the existing USPP Aviation Section's heliport in Washington, DC. The EA contained analysis developed as a result of public comments on a draft version obtained during a 30-day public review on the draft EA. The availability of the EA for a second 30-day public comment period was announced in the **Federal Register** on August 29, 2000. After the comment period, NPS selected the preferred alternative which is the proposed action, followed by a November 2, 2000 finding of no significant environmental impact.

These improvements are to the USPP heliport, which is an existing facility in Anacostia Park, National Capital Parks-East, and is used for helicopters that are the only law enforcement and emergency rescue helicopters serving Washington, DC. The project would construct an approximately 6,100-square-foot aviation hangar and replace the fuel trucks on-site by installation of a new environmentally protective fueling station. All improvements would be completely located within the existing area of the heliport with no increase in the size of the heliport footprint, and with three-fourths acre of paving removed and restored to grass.

SUPPLEMENTARY INFORMATION: Requests for copies of the DN/FONSI/EA, or for any additional information, should be directed to Mr. Michael Wilderman, National Capital Parks-East, 1900 Anacostia Drive, SE., Washington, DC 20020, Telephone (202) 690–5165.

Dated: November 6, 2000.

Gentry Davis,

Acting Regional Director, National Park Service, National Capital Region.

[FR Doc. 00–28948 Filed 11–9–00; 8:45 am]

BILLING CODE 4310–70–M

DEPARTMENT OF THE INTERIOR

National Park Service

Notice of Inventory Completion for Native American Human Remains and Associated Funerary Objects in the Possession of the Anthropological Studies Center (ASC), Archaeological Collections Facility, Sonoma State University, Rohnert Park, CA, and in Control of the California Department of Transportation (CALTRANS)

AGENCY: National Park Service.

ACTION: Notice.

Notice is hereby given in accordance with provisions of the Native American Graves Protection and Repatriation Act (NAGPRA), 43 CFR 10.9, of the completion of an inventory of human remains and associated funerary objects in possession of the Anthropological Studies Center (ASC), Archaeological Collections Facility, Sonoma State University, Rohnert Park, CA; and in the control of the California Department of Transportation (CALTRANS), Sacramento, CA.

This notice is being published as part of the National Park Service's administrative responsibilities under NAGPRA, 43 CFR 10.2(c). The determinations within this notice are the sole responsibility of the museum, institution, or Federal agency that has control of these Native American human remains and associated funerary objects. The National Park Service is not responsible for the determinations within this notice.

A detailed assessment of the human remains was made by the Anthropological Studies Center, Archaeological Collections Facility, Sonoma State University professional staff in consultation with representatives of the Cortina Indian Rancheria of Wintun Indians of California.

In 1974, human remains representing two individuals were recovered from the Suscol Site (CA–NAP–15/H) in Napa County, CA by Thomas F. King, during test excavations along Highway 29. No known individuals were identified. No associated funerary objects are present.

In 1978 and 1979, human remains representing five individuals were recovered from the Suscol Site (CA–NAP–15/H) in Napa County, CA by Stradford and Schwaderer, during test excavations along Highway 29. No known individuals were identified. The two associated funerary objects found with individual one (accession number 79–14) are an obsidian biface and a groundstone fragment. The 31 associated funerary objects found with individuals two through four (accession number 79–28) are glass trade beads.

Based on archeological evidence, continuity of occupation, and ethnographic accounts, these individuals have been identified as Native American. The major occupation of CA–NAP–15/H occurred during the historic period, mainly during the early 19th Century. Based on point typologies and bead typologies uncovered during previous excavations of burial matrixes, the human remains have been dated to the historic period. Geographical, ethnographic, linguistic, and historical evidence indicates that the Suscol site is located within the traditional Patwin territory.

Based on the above-mentioned information, officials of the Anthropological Studies Center, Archaeological Collections Facility, Sonoma State University have determined that, pursuant to 43 CFR 10.2 (d)(1), the human remains listed above represent the physical remains of seven individuals of Native American ancestry. Officials of the Anthropological Studies Center, Archaeological Collections Facility, Sonoma State University also have determined that, pursuant to 43 CFR 10.2(d)(2), the 33 objects listed above are reasonably believed to have been placed with or near individual human remains at the time of death or later as part of the death rite or ceremony. Lastly, officials of the Anthropological Studies Center, Archaeological Collections Facility, Sonoma State University have determined that, pursuant to 43 CFR 10.2(e), there is a relationship of shared group identity which can be reasonably traced between these Native American human remains and associated funerary objects and the Cortina Band of Wintun Indians, California.

This notice has been sent to officials of the Cortina Band of Wintun Indians, California. Representatives of any other Indian tribe that believes itself to be culturally affiliated with these human remains and associated funerary objects should contact Tina Biorn, Environmental Program, Department of Transportation, P.O. Box 942874 (M.S.27), Sacramento, CA 94274–0001, telephone (916) 653–0013, before December 13, 2000. Repatriation of the human remains and associated funerary objects to the Cortina Band of Wintun Indians, California may begin after that date if no additional claimants come forward.

Dated: October 31, 2000.

John Robbins,

Assistant Director, Cultural Resources Stewardship and Partnerships.

[FR Doc. 00–29001 Filed 11–9–00; 8:45 am]

BILLING CODE 4310–70–F

DEPARTMENT OF THE INTERIOR

National Park Service

Notice of Inventory Completion for Native American Human Remains and Associated Funerary Objects in the Possession of the University of Denver Department of Anthropology and Museum of Anthropology, Denver, CO

AGENCY: National Park Service.

ACTION: Notice.

Notice is hereby given in accordance with provisions of the Native American Graves Protection and Repatriation Act (NAGPRA), 43 CFR 10.9, of the completion of an inventory of human remains and associated funerary objects in the possession of the University of Denver Department of Anthropology and Museum of Anthropology, Denver, CO.

This notice is published as part of the National Park Service's administrative responsibilities under NAGPRA, 43 CFR 10.2 (c). The determinations within this notice are the sole responsibility of the museum, institution, or Federal agency that has control of these Native American human remains and associated funerary objects. The National Park Service is not responsible for the determinations within this notice.

A detailed assessment of the human remains was made by University of Denver Department of Anthropology and Museum of Anthropology professional staff, a contract physical anthropologist, and the New Mexico State Archaeologist in consultation with representatives of the Hopi Tribe of Arizona, and the Colorado River Indian Tribes of the Colorado River Indian Reservation, Arizona and California.

In 1938, human remains representing one individual were recovered from Pueblo Blanco, Santa Fe County, NM, by Theodore Sowers. Mr. Sowers was a graduate of the University of Denver, and, in 1995, his daughters donated the remains to the University of Denver so that they could be repatriated. No known individuals were identified. The 14 associated funerary objects are 1 non-human bone, 9 ceramic sherds (black and red on white), and 4 chipped stone tools.

Pueblo Blanco (site LA 40), a large masonry pueblo in the Galisteo Basin, was occupied from A.D. 1400 to circa A.D. 1680 by Tanoan-speaking people. The Galisteo Basin was largely abandoned following the Pueblo Revolt of 1680, and subsequently the Tanos lived among other Rio Grande pueblos. Many of the Tanos moved to the Hopi

area around 1700, where they live in Tewa Village. The evidence presented during consultations with the Hopi, supported by the ethnohistoric record and archeological evidence, demonstrates a cultural affiliation between Pueblo Blanco and the Hopi Tribe of Arizona.

Based on the above-mentioned information, officials of the University of Denver Department of Anthropology and Museum of Anthropology have determined that, pursuant to 43 CFR 10.2 (d)(1), the human remains listed above represent the physical remains of one individual of Native American ancestry. Officials of the University of Denver Department of Anthropology and Museum of Anthropology also have determined that, pursuant to 43 CFR 10.2 (d)(2), the 14 objects listed above are reasonably believed to have been placed with or near individual human remains at the time of death or later as part of the death rite or ceremony. Lastly, officials of the University of Denver Department of Anthropology and Museum of Anthropology have determined that, pursuant to 43 CFR 10.2 (e), there is a relationship of shared group identity that can be reasonably traced between these Native American human remains and associated funerary objects and the Hopi Tribe of Arizona.

This notice has been sent to officials of the Hopi Tribe of Arizona and the Colorado River Indian Tribes of the Colorado River Indian Reservation, Arizona and California. Representatives of any other Indian tribe that believes itself to be culturally affiliated with these human remains and associated funerary objects should contact Jan I. Bernstein, Collections Manager and NAGPRA Coordinator at the University of Denver Department of Anthropology and Museum of Anthropology, 2000 Asbury, Sturm Hall S–146, Denver, CO 80208–2406, email jbernste@du.edu, telephone (303) 871–2543, before December 13, 2000. Repatriation of the human remains and associated funerary objects to the Hopi Tribe of Arizona may begin after that date if no additional claimants come forward.

Dated: October 31, 2000.

John Robbins,

Assistant Director, Cultural Resources Stewardship and Partnerships.

[FR Doc. 00–28857 Filed 11–9–00; 8:45 am]

BILLING CODE 4310–70–F

DEPARTMENT OF THE INTERIOR

National Park Service

Notice of Inventory Completion for Native American Human Remains and Associated Funerary Objects in the Possession of the University of Denver Department of Anthropology and Museum of Anthropology, Denver, CO

AGENCY: National Park Service.

ACTION: Notice.

Notice is hereby given in accordance with provisions of the Native American Graves Protection and Repatriation Act (NAGPRA), 43 CFR 10.9, of the completion of an inventory of human remains and associated funerary objects in the possession of the University of Denver Department of Anthropology and Museum of Anthropology, Denver, CO.

This notice is published as part of the National Park Service's administrative responsibilities under NAGPRA, 43 CFR 10.2 (c). The determinations within this notice are the sole responsibility of the museum, institution, or Federal agency that has control of these Native American human remains and associated funerary objects. The National Park Service is not responsible for the determinations within this notice.

A detailed assessment of the human remains was made by University of Denver Department of Anthropology and Museum of Anthropology professional staff and a contract physical anthropologist in consultation with representatives of the Paiute-Shoshone Tribe of the Fallon Reservation and Colony, Nevada; Pyramid Lake Paiute Tribe of the Pyramid Lake Reservation, Nevada; Reno-Sparks Indian Colony, Nevada; Walker River Paiute Tribe of the Walker River Reservation, Nevada; and the Yerington Paiute Tribe of the Yerington Colony and Campbell Ranch, Nevada.

In 1949, human remains representing two individuals were recovered from near Fallon, Churchill County, NV. At an unknown date an unknown individual donated the remains to the museum. No known individuals were identified. No associated funerary objects are present.

The geographical location and physical anthropological characteristics indicate that these remains are Native American. The archeological, ethnological, and oral historical evidence demonstrates that the area around Fallon, NV, has been the ancestral territory of the Northern Paiute since at least A.D. 1000. Evidence presented during consultations indicates that the Northern Paiute inhabitants of this area are presently represented by the Paiute-Shoshone Tribe of the Fallon Reservation and Colony, Nevada; Pyramid Lake Paiute Tribe of the Pyramid Lake Reservation, Nevada; Reno-Sparks Indian Colony, Nevada; and the Walker River Paiute Tribe of the Walker River Reservation, Nevada.

Based on the above-mentioned information, officials of the University of Denver Department of Anthropology and Museum of Anthropology have determined that, pursuant to 43 CFR 10.2 (d)(1), the human remains listed above represent the physical remains of two individuals of Native American ancestry. Also, officials of the University of Denver Department of Anthropology and Museum of Anthropology have determined that, pursuant to 43 CFR 10.2 (e), there is a relationship of shared group identity that can be reasonably traced between these Native American human remains and the Paiute-Shoshone Tribe of the Fallon Reservation and Colony, Nevada; Pyramid Lake Paiute Tribe of the Pyramid Lake Reservation, Nevada; Reno-Sparks Indian Colony, Nevada; and the Walker River Paiute Tribe of the Walker River Reservation, Nevada.

This notice has been sent to officials of the Paiute-Shoshone Tribe of the Fallon Reservation and Colony, Nevada; Pyramid Lake Paiute Tribe of the Pyramid Lake Reservation, Nevada; Reno-Sparks Indian Colony, Nevada; Walker River Paiute Tribe of the Walker River Reservation, Nevada; and the Yerington Paiute Tribe of the Yerington Colony and Campbell Ranch, Nevada. Representatives of any other Indian tribe that believes itself to be culturally affiliated with these human remains should contact Jan I. Bernstein, Collections Manager and NAGPRA Coordinator at the University of Denver Department of Anthropology and Museum of Anthropology, 2000 Asbury, Sturm Hall S–146, Denver, CO 80208–2406, email jbernste@du.edu, telephone (303) 871–2543, before December 13, 2000. Repatriation of the human remains to the Paiute-Shoshone Tribe of the Fallon Reservation and Colony, Nevada; Pyramid Lake Paiute Tribe of the Pyramid Lake Reservation, Nevada; Reno-Sparks Indian Colony, Nevada; and the Walker River Paiute Tribe of the Walker River Reservation, Nevada, may begin after that date if no additional claimants come forward.

Dated: October 30, 2000.

John Robbins,

Assistant Director, Cultural Resources Stewardship and Partnerships.

[FR Doc. 00–28858 Filed 11–9–00; 8:45 am]

BILLING CODE 4310–70–F

DEPARTMENT OF THE INTERIOR

National Park Service

Notice of Inventory Completion for Native American Human Remains and Associated Funerary Objects in the Possession of the University of Denver Department of Anthropology and Museum of Anthropology, Denver, CO

AGENCY: National Park Service.

ACTION: Notice.

Notice is hereby given in accordance with provisions of the Native American Graves Protection and Repatriation Act (NAGPRA), 43 CFR 10.9, of the completion of an inventory of human remains and associated funerary objects in the possession of the University of Denver Department of Anthropology and Museum of Anthropology, Denver, CO. This notice is published as part of the National Park Service's administrative responsibilities under NAGPRA, 43 CFR 10.2 (c). The determinations within this notice are the sole responsibility of the museum, institution, or Federal agency that has control of these Native American human remains. The National Park Service is not responsible for the determinations within this notice.

A detailed assessment of the human remains was made by University of Denver Department of Anthropology and Museum of Anthropology professional staff and a contract physical anthropologist, in consultation with representatives of the Alabama-Coushatta Tribes of Texas; Alabama-Quassarte Tribal Town, Oklahoma; Cherokee Nation, Oklahoma; Chickasaw Nation, Oklahoma; Choctaw Nation of Oklahoma; Eastern Band of Cherokee Indians of North Carolina; Jena Band of Choctaw Indians, Louisiana; Kialegee Tribal Town, Oklahoma; Mississippi Band of Choctaw Indians, Mississippi; Muscogee (Creek) Nation, Oklahoma; Poarch Band of Creek Indians of Alabama; Quapaw Tribe of Indians, Oklahoma; Thlopthlocco Tribal Town, Oklahoma; and the United Keetoowah Band of Cherokee Indians of Oklahoma.

At an unknown date, an unknown person removed human remains representing two individuals from the Hales' Point Mound, Lauderdale County, TN. At a later date in the 1950's or 1960's the remains and their associated funerary objects were purchased from Tilton Indian Relics by Mr. Fallis F. Rees, who donated the remains and funerary objects to the University of Denver Department of Anthropology and Museum of Anthropology in 1967. No known individuals were identified. The eight associated funerary objects are one mortuary jar, two water bottles, one of which is Bell Plain, one elbow pipe, three unidentified clay objects with indentations, and one double jar with red slip and shell temper.

The Hales' Point site has been identified archeologically as a Walls phase site. The Walls phase is a Late Mississippian (A.D. 1200-1540) and Early Historic Period (A.D. 1540-1700) cultural unit in the central Mississippi Valley of southwestern Tennessee and eastern Arkansas. The funerary objects support a late precontact date for the remains. At the time that Europeans first visited the region around Hales' Point, in the mid-16th century, both the Quapaw and the Chickasaw lived in the central Mississippi Valley. During consultations, representatives of both the Quapaw Tribe of Indians, Oklahoma, and the Chickasaw Nation, Oklahoma, presented evidence from oral tradition, ethnohistory, archeology, and material culture, specifically continuities in ceramic traditions, to demonstrate their cultural affiliation to the Hales' Point site.

Based on the above-mentioned information, officials of the University of Denver Department of Anthropology and Museum of Anthropology have determined that, pursuant to 43 CFR 10.2 (d)(1), the human remains listed above represent the physical remains of two individuals of Native American ancestry. Officials of the University of Denver Department of Anthropology and Museum of Anthropology also have determined that, pursuant to 43 CFR 10.2 (d)(2), the eight objects listed above are reasonably believed to have been placed with or near individual human remains at the time of death or later as part of the death rite or ceremony. Also, officials of the University of Denver Department of Anthropology and Museum of Anthropology have determined that, pursuant to 43 CFR 10.2 (e), there is a relationship of shared group identity that can be reasonably traced between these Native American human remains and associated funerary objects and the Chickasaw Nation, Oklahoma, and the Quapaw Tribe of Indians, Oklahoma.

This notice has been sent to officials of the Alabama-Coushatta Tribes of Texas; Alabama-Quassarte Tribal Town, Oklahoma; Cherokee Nation, Oklahoma; Chickasaw Nation, Oklahoma; Choctaw Nation of Oklahoma; Eastern Band of Cherokee Indians of North Carolina; Jena Band of Choctaw Indians, Louisiana; Kialegee Tribal Town, Oklahoma; Mississippi Band of Choctaw Indians, Mississippi; Muscogee (Creek) Nation, Oklahoma; Poarch Band of Creek Indians of Alabama; Quapaw Tribe of Indians, Oklahoma; Thlopthlocco Tribal Town, Oklahoma; and the United Keetoowah Band of Cherokee Indians of Oklahoma. Representatives of any other Indian tribe that believes itself to be culturally affiliated with these human remains and associated funerary objects should contact Jan I. Bernstein, Collections Manager and NAGPRA Coordinator at the University of Denver Museum of Anthropology, 2000 Asbury, Sturm Hall S–146, Denver, CO 80208–2406, email jbernste@du.edu, telephone (303) 871–2543, before December 13, 2000. Repatriation of the human remains and associated funerary objects to the Chickasaw Nation, Oklahoma, and the Quapaw Tribe of Indians, Oklahoma, may begin after that date if no additional claimants come forward.

Dated: October 31, 2000.

John Robbins,

Assistant Director, Cultural Resources Stewardship and Partnerships.

[FR Doc. 00–28859 Filed 11–9–00; 8:45 am]

BILLING CODE 4310–70–F

DEPARTMENT OF THE INTERIOR

National Park Service

Notice of Inventory Completion for Native American Human Remains and Associated Funerary Objects in the Control of the Bureau of Indian Affairs, Washington, DC, and in the Possession of the University of Denver Department of Anthropology and Museum of Anthropology, Denver, CO

AGENCY: National Park Service.

ACTION: Notice.

Notice is hereby given in accordance with provisions of the Native American Graves Protection and Repatriation Act (NAGPRA), 43 CFR 10.9, of the completion of an inventory of human remains and associated funerary objects in the control of the Bureau of Indian Affairs, Washington, DC, and in the possession of the University of Denver Department of Anthropology and Museum of Anthropology, Denver, CO.

This notice is published as part of the National Park Service's administrative responsibilities under NAGPRA, 43 CFR 10.2 (c). The determinations within this

notice are the sole responsibility of the museum, institution, or Federal agency that has control of these Native American human remains and associated funerary objects. The National Park Service is not responsible for the determinations within this notice.

A detailed assessment of the human remains was made by University of Denver Department of Anthropology and Museum of Anthropology professional staff and a contract physical anthropologist in consultation with representatives of the Big Pine Band of Owens Valley Paiute Shoshone Indians of the Big Pine Reservation, California; Death Valley Timbi-Sha Shoshone Band of California; Duckwater Shoshone Tribe of the Duckwater Reservation, Nevada; Ely Shoshone Tribe of Nevada; Fort McDermitt Paiute and Shoshone Tribes of the Fort McDermitt Indian Reservation, Nevada and Oregon; Northwestern Band of Shoshoni Nation of Utah (Washakie); Paiute-Shoshone Indians of the Bishop Community of the Bishop Colony, California; Paiute-Shoshone Indians of the Lone Pine Community of the Lone Pine Reservation, California; Paiute-Shoshone Tribe of the Fallon Reservation and Colony, Nevada; Shoshone Tribe of the Wind River Reservation, Wyoming; Shoshone-Bannock Tribes of the Fort Hall Reservation of Idaho; Shoshone-Paiute Tribes of the Duck Valley Reservation, Nevada; Te-Moak Tribes of Western Shoshone Indians of Nevada (four constituent bands: Battle Mountain Band, Elko Band, South Fork Band, and Wells Band); and the Yomba Shoshone Tribe of the Yomba Reservation, Nevada.

Around 1940, human remains representing two individuals were collected from Dinwoody, Fremont County, WY, on the Wind River Reservation, by Scott Peterson (Crow) and Alice Peterson (Shoshone). At an unknown date, the Petersons gave the remains to Theodore Sowers. Mr. Sowers was a graduate of the University of Denver, and, in 1995, his daughters donated the remains to the University of Denver so that they could be repatriated. No known individuals were identified. No associated funerary objects are present.

The statements of the collectors and donor indicate that these remains are Native American, which is supported by the osteological and geographical evidence. Linguistic and ethnographic evidence indicates that the ancestors of the Eastern Shoshone arrived in the Wind River region by A.D. 1000, and perhaps much earlier. The condition of the remains suggests that they are probably younger than 1000 years old. The Eastern Shoshone are currently represented by the Big Pine Band of Owens Valley Paiute Shoshone Indians of the Big Pine Reservation, California; Death Valley Timbi-Sha Shoshone Band of California; Duckwater Shoshone Tribe of the Duckwater Reservation, Nevada; Ely Shoshone Tribe of Nevada; Fort McDermitt Paiute and Shoshone Tribes of the Fort McDermitt Indian Reservation, Nevada and Oregon; Northwestern Band of Shoshoni Nation of Utah (Washakie); Paiute-Shoshone Indians of the Bishop Community of the Bishop Colony, California; Paiute-Shoshone Indians of the Lone Pine Community of the Lone Pine Reservation, California; Paiute-Shoshone Tribe of the Fallon Reservation and Colony, Nevada; Shoshone Tribe of the Wind River Reservation, Wyoming; Shoshone-Bannock Tribes of the Fort Hall Reservation of Idaho; Shoshone-Paiute Tribes of the Duck Valley Reservation, Nevada; Te-Moak Tribes of Western Shoshone Indians of Nevada (four constituent bands: Battle Mountain Band, Elko Band, South Fork Band, and Wells Band); and the Yomba Shoshone Tribe of the Yomba Reservation, Nevada.

Based on the above-mentioned information, officials of the University of Denver Department of Anthropology and Museum of Anthropology have determined that, pursuant to 43 CFR 10.2 (d)(1), the human remains listed above represent the physical remains of two individuals of Native American ancestry. Also, officials of the University of Denver Department of Anthropology and Museum of Anthropology have determined that, pursuant to 43 CFR 10.2 (e), there is a relationship of shared group identity that can be reasonably traced between these Native American human remains and the Big Pine Band of Owens Valley Paiute Shoshone Indians of the Big Pine Reservation, California; Death Valley Timbi-Sha Shoshone Band of California; Duckwater Shoshone Tribe of the Duckwater Reservation, Nevada; Ely Shoshone Tribe of Nevada; Fort McDermitt Paiute and Shoshone Tribes of the Fort McDermitt Indian Reservation, Nevada and Oregon; Northwestern Band of Shoshoni Nation of Utah (Washakie); Paiute-Shoshone Indians of the Bishop Community of the Bishop Colony, California; Paiute-Shoshone Indians of the Lone Pine Community of the Lone Pine Reservation, California; Paiute-Shoshone Tribe of the Fallon Reservation and Colony, Nevada; Shoshone Tribe of the Wind River Reservation, Wyoming; Shoshone-Bannock Tribes of the Fort Hall Reservation of Idaho; Shoshone-Paiute Tribes of the Duck Valley Reservation, Nevada; Te-Moak Tribes of Western Shoshone Indians of Nevada (four constituent bands: Battle Mountain Band, Elko Band, South Fork Band, and Wells Band); and the Yomba Shoshone Tribe of the Yomba Reservation, Nevada.

This notice has been sent to officials of the Big Pine Band of Owens Valley Paiute Shoshone Indians of the Big Pine Reservation, California; Death Valley Timbi-Sha Shoshone Band of California; Duckwater Shoshone Tribe of the Duckwater Reservation, Nevada; Ely Shoshone Tribe of Nevada; Fort McDermitt Paiute and Shoshone Tribes of the Fort McDermitt Indian Reservation, Nevada and Oregon; Northwestern Band of Shoshoni Nation of Utah (Washakie); Paiute-Shoshone Indians of the Bishop Community of the Bishop Colony, California; Paiute-Shoshone Indians of the Lone Pine Community of the Lone Pine Reservation, California; Paiute-Shoshone Tribe of the Fallon Reservation and Colony, Nevada; Shoshone Tribe of the Wind River Reservation, Wyoming; Shoshone-Bannock Tribes of the Fort Hall Reservation of Idaho; Shoshone-Paiute Tribes of the Duck Valley Reservation, Nevada; Te-Moak Tribes of Western Shoshone Indians of Nevada (four constituent bands: Battle Mountain Band, Elko Band, South Fork Band, and Wells Band); the Yomba Shoshone Tribe of the Yomba Reservation, Nevada; and the Bureau of Indian Affairs. Representatives of any other Indian tribe that believes itself to be culturally affiliated with these human remains should contact Jan I. Bernstein, Collections Manager and NAGPRA Coordinator at the University of Denver Department of Anthropology and Museum of Anthropology, 2000 Asbury, Sturm Hall S-146, Denver, CO 80208-2406, email jbernste@du.edu, telephone (303) 871-2543, before [thirty days after publication in the **Federal Register**]. Repatriation of the human remains to the Big Pine Band of Owens Valley Paiute Shoshone Indians of the Big Pine Reservation, California; Death Valley Timbi-Sha Shoshone Band of California; Duckwater Shoshone Tribe of the Duckwater Reservation, Nevada; Ely Shoshone Tribe of Nevada; Fort McDermitt Paiute and Shoshone Tribes of the Fort McDermitt Indian Reservation, Nevada and Oregon;

Northwestern Band of Shoshoni Nation of Utah (Washakie); Paiute-Shoshone Indians of the Bishop Community of the Bishop Colony, California; Paiute-Shoshone Indians of the Lone Pine Community of the Lone Pine Reservation, California; Paiute-Shoshone Tribe of the Fallon Reservation and Colony, Nevada; Shoshone Tribe of the Wind River Reservation, Wyoming; Shoshone-Bannock Tribes of the Fort Hall Reservation of Idaho; Shoshone-Paiute Tribes of the Duck Valley Reservation, Nevada; Te-Moak Tribes of Western Shoshone Indians of Nevada (four constituent bands: Battle Mountain Band, Elko Band, South Fork Band, and Wells Band); and the Yomba Shoshone Tribe of the Yomba Reservation, Nevada, may begin after that date if no additional claimants come forward.

Dated: November 6, 2000.

John Robbins,

Assistant Director, Cultural Resources Stewardship and Partnerships.

[FR Doc. 00–28860 Filed 11–09–00; 8:45 am]

BILLING CODE 4310–70–P

DEPARTMENT OF THE INTERIOR

Bureau of Reclamation

Central Valley Project Improvement Act, Criteria for Evaluating Water Management Plans

AGENCY: Bureau of Reclamation, Interior.

ACTION: Notice.

SUMMARY: To meet the requirements of the Central Valley Project Improvement Act (CVPIA) of 1992 and the Reclamation Reform Act of 1982, Reclamation developed and published the Criteria for Evaluating Water Conservation Plans, dated April 30, 1993. In September 1996, Reclamation revised the document and renamed it to Criteria for Evaluating Water Management Plans (Criteria).

Patterson Water District has developed a water management plan which Reclamation has evaluated and preliminarily determined to meet the requirements of the Criteria.

The 1996 Criteria were developed based on information provided during public scoping and public review sessions held throughout Reclamation's Mid-Pacific (MP) Region. Reclamation uses these Criteria to evaluate the adequacy of all water management plans developed by Central Valley Project contractors. The Criteria were developed and the plans have been evaluated for the purpose of promoting the most efficient water use reasonably achievable by all MP Region contractors. Reclamation made a commitment (stated within the Criteria) to publish a notice of its draft determination of the adequacy of each contractor's water management plan in the **Federal Register** to allow the public a minimum of 30 days to comment on its preliminary determinations.

DATES: All public comments must be received by December 13, 2000.

ADDRESSES: Our practice is to make comments, including names and home addresses of respondents, available for public review. Individual respondents may request that we withhold their home address from public disclosure, which we will honor to the extent allowable by law. There also may be circumstances in which we would withhold a respondent's identity from public disclosure, as allowable by law. If you wish us to withhold your name and/or address, you must state this prominently at the beginning of your comment. We will make all submissions from organizations or businesses, and from individuals identifying themselves as representatives or officials of organizations or businesses, available for public disclosure in their entirety.

Please mail comments to Lucille Billingsley, Bureau of Reclamation, 2800 Cottage Way, MP–410, Sacramento CA 95825.

FOR FURTHER INFORMATION CONTACT: To be placed on a mailing list for any subsequent information, please contact Lucille Billingsley at the address above, or by telephone at (916) 978–5215 (TDD 978–5608).

SUPPLEMENTARY INFORMATION: Under provision of Section 3405 (e) of the CVPIA (Title 34 Pub. L. 102–575), ''The Secretary [of the Interior] shall establish and administer an office on Central Valley Project water conservation best management practices that shall * * * develop criteria for evaluating the adequacy of all water conservation plans developed by project contractors, including those plans required by section 210 of the Reclamation Reform Act of 1982.'' Also, according to Section 3405 (e)(1), these criteria will be developed ''* * * with the purpose of promoting the highest level of water use efficiency reasonably achievable by project contractors using best available cost-effective technology and best management practices.''

The Criteria states that all parties (districts) that contract with Reclamation for water supplies (municipal and industrial contracts over 2,000 irrigable acre-feet and agricultural contracts over 2,000 irrigable acres) will prepare water management plans which will be evaluated by Reclamation based on the following required information detailed in the steps listed below to develop, implement, monitor, and update their water management plans. The steps are:

1. Describe the district.
2. Inventory water resources available to the District.
3. Best Management Practices (BMP's) for Agricultural Contractors.
4. BMP's for Urban Contractors.
5. Exemption Process.

Public comment on Reclamation's preliminary (*i.e.,* draft) determinations of Patterson Water District's water management plan is invited at this time. A copy of the Plan will be available for review at Reclamation's MP Regional Office located in Sacramento, California, and MP's South-Central California Area Office located in Fresno, California.

Dated: November 1, 2000.

Charles B. Johnson,

Acting Regional Resources Manager, Mid-Pacific Region.

[FR Doc. 00–28770 Filed 11–9–00; 8:45 am]

BILLING CODE 4310–MN–P

INTERNATIONAL TRADE COMMISSION

[Inv. No. 337–TA–429]

In the Matter of Certain Bar Clamps, Bar Clamp Pads, and Related Packaging, Display, and Other Materials; Notice of Commission Decision To Extend by One Week the Deadline for Determining Whether To Review an Initial Determination Terminating the Investigation in Part Based on Partial Withdrawal of the Complaint

AGENCY: International Trade Commission.

ACTION: Notice.

SUMMARY: Notice is hereby given that the U.S. International Trade Commission has determined to extend by one week, or until November 9, 2000, the deadline for determining whether to review an initial determination (ID) (Order No. 5) issued by the presiding administrative law judge (ALJ) in the above-captioned investigation.

FOR FURTHER INFORMATION CONTACT: Tina Potuto Kimble, Esq., Office of the General Counsel, U.S. International Trade Commission, telephone 202–205–3116.

SUPPLEMENTARY INFORMATION: The Commission instituted this investigation on March 13, 2000, based on a complaint filed by American Tool

Companies, Inc. (''American Tool'') of Hoffman Estates, Illinois, and Peterson Manufacturing Co., Inc. (''Peterson'') of DeWitt, Nebraska (collectively ''complainants''). 65 FR 13307.

On September 6, 2000, complainants filed a motion to amend the complaint and notice of investigation asserting that respondents no longer ship infringing product to the United States and do not intend to do so in the future. On September 18, 2000, respondents, Wolfcraft GMbH of Germany and Wolfcraft, Inc. of Itasca, Illinois, filed an opposition to complainants' motion stating that they in fact intend to resume importation of the product in question to the United States. On September 18, 2000, the Commission investigative attorney (IA) filed a response in support of the motion, but argued that it should be construed as a motion for partial termination based on the withdrawal of certain allegations. On September 20, 2000, complainants filed a reply agreeing with IA's suggestion that their motion be construed as one for partial termination. On October 2, 2000, the presiding ALJ issued an ID (Order No. 5) granting complainants' motion for partial withdrawal of the complaint. No petitions for review of the ID were filed.

This action is taken under the authority of section 337 of the Tariff Act of 1930, 19 U.S.C. 1337, and Commission rule 210.42(h)(3), 19 CFR 210.42(h)(3).

Copies of the public version of the ID, and all other nonconfidential documents filed in connection with this investigation, are or will be available for inspection during official business hours (8:45 a.m. to 5:15 p.m.) in the Office of the Secretary, U.S. International Trade Commission, 500 E Street SW, Washington, DC 20436, telephone 202–205–2000. Hearing-impaired persons are advised that information on the matter can be obtained by contacting the Commission's TDD terminal on 202–205–1810. General information concerning the Commission may also be obtained by accessing its Internet server (http://www.usitc.gov).

Issued: November 3, 2000.

By order of the Commission.

Donna R. Koehnke,

Secretary.

[FR Doc. 00–28981 Filed 11–9–00; 8:45 am]

BILLING CODE 7020–02–P

INTERNATIONAL TRADE COMMISSION

[USITC SE–00–050]

Sunshine Act Meeting

AGENCY HOLDING THE MEETING: United States International Trade Commission.

TIME AND DATE: November 20, 2000 at 2:00 p.m.

PLACE: Room 101, 500 E Street S.W., Washington, DC 20436, Telephone: (202) 205–2000.

STATUS: Open to the public.

MATTERS TO BE CONSIDERED:

1. Agenda for future meeting: none.
2. Minutes.
3. Ratification List.
4. Inv. No. 731–TA–864 (Final) (Stainless Steel Butt-Weld Pipe Fittings from Germany)—briefing and vote. (The Commission is currently scheduled to transmit its determination and Commissioners' opinions to the Secretary of Commerce on November 29, 2000.)
5. Outstanding action jackets: none.

In accordance with Commission policy, subject matter listed above, not disposed of at the scheduled meeting, may be carried over to the agenda of the following meeting.

Issued: November 7, 2000.

By order of the Commission:

Donna R. Koehnke,

Secretary.

[FR Doc. 00–29073 Filed 11–8–00; 1:36 pm]

BILLING CODE 7020–02–M

DEPARTMENT OF JUSTICE

Office of Justice Programs

Agency Information Collection Activities: Proposed Collection; Comment Request

ACTION: Notice of information collection under review; New Collection.

National Business Survey on White Collar Crime

The Department of Justice, Office of Justice Programs, Bureau of Justice Assistance, National White Collar Crime (NWCCC), has submitted the following information collection request for review and clearance in accordance with the Paperwork Reduction Act of 1995. Office of Management and Budget approval is being sought for the information collection listed below. This proposed information collection was previously published in the **Federal Register** on July 18, 2000 (Volume 65, 44546), allowing for a 60-day public comment period.

The purpose of this notice is to allow an additional 30 days for public comment until December 13, 2000. This process is conducted in accordance with 5 CFR 1320.10.

Written comments and/or suggestions regarding the item(s) contained in this notice, especially regarding the estimated public burden and associated response time, should be directed to the Office of Management and Budget, Office of Information and Regulatory Affairs, Attention: Department of Justice Desk Officer, Washington, DC 20530. Additionally, comments may be submitted to OMB via facsimile to (202) 395–7285. Comments may also be submitted to the Department of Justice (DOJ), Justice Management Division, Information Management and Security Staff, Attention: Department Deputy Clearance Officer, Suite 1220, National Place Building, 1331 Pennsylvania Avenue, NW, Washington, DC 20530.

Written comments and/or suggestions from the public and affected agencies concerning the proposed collection of information should address one or more of the following four points:

(1) Evaluate whether the proposed collection of information is necessary for the proper performance of the functions of the agency, including whether the information will have practical utility;

(2) Evaluate the accuracy of the agency's estimate of the burden of the proposed collection of information, including the validity of the methodology and assumptions used;

(3) Enhance the quality, utility, and clarity of the information to be collected; and

(4) Minimize the burden of the collection of information on those who are to respond, including through the use of appropriate automated, electronic, mechanical or other technology collection techniques or other forms of information technology (e.g. permitting electronic submission of responses).

Overview of This Information Collection

(1) *Type of Information Collection:* New Collection.

(2) *Title of the Form/Collection:* National Business Survey on White Collar Crime.

(3) *Agency form number, if any, and the applicable component of the Department of Justice sponsoring the collection:* Form = None. National White Collar Crime Center (NWCCC), Bureau of Justice Assistance, Office of Justice Programs, U.S. Department of Justice.

(4) *Affected public who will be asked or required to respond, as well as a brief*

abstract: Primary: United States businesses. Other: None. The NWCCC Training and Research Institute anticipates conducting a national survey of professional business persons and their perceptions of white collar crime. Particular areas of interest include victimization, perpetration, prevention measures, cyber-crime, and general demographics.

(5) *An estimate of the total number of respondents and the amount of time estimated for an average respondent to respond:* 1070 respondents at 25 minutes per mail survey.

(6) *An estimate of the total public burden (in hours) associated with the collection:* 450 annual burden hours.

If you have additional comments, suggestions, or need copies of the proposed information collection instruments with instructions, or additional information, please contact: Mrs. Brenda Dyer, Deputy Clearance Officer, United States Department of Justice, Information Management and Security Staff, Justice Management Division, Suite 1220, National Place Building, 1331 Pennsylvania Avenue, NW, Washington.

Dated: November 2, 2000.

Brenda Dyer,

Department Deputy Clearance Officer, United States Department of Justice.

[FR Doc. 00–29002 Filed 11–9–00; 8:45 am]

BILLING CODE 4410–18–M

DEPARTMENT OF LABOR

Employment and Training Administration

Proposed Collection; Comment Request

ACTION: Notice.

SUMMARY: The Department of Labor, as part of its continuing effort to reduce paperwork and respondent burden conducts a preclearance consultation program to provide the general public and Federal agencies with an opportunity to comment on proposed and/or continuing collections of information in accordance with the Paperwork Reduction Act of 1995 (PRA95) [44 U.S.C. 3506(c)(2)(A)]. This program helps to ensure that requested data can be provided in the desired format, reporting burden (time and financial resources) is minimized, collection instruments are clearly understood, and the impact of collection requirements on respondents can be properly assessed. Currently, the Employment and Training Administration is soliciting comments concerning the proposed revision of the Center for Employment and Training (CET) Follow-Up Survey. A copy of the proposed information collection request (ICR) can be obtained by contacting the office listed below in the addressee section of this notice.

DATES: Written comments must be submitted to the office listed in the addressee's section below on or before January 12, 2001.

ADDRESSES: Tom NaSell, U.S. Department of Labor, Employment and Training Administration/Office of Policy Research, 200 Constitution Ave., NW., Room N–5629, Washington, DC 20210, (202) 693–3615 (this is not a toll-free number), TNASELL@doleta.gov.

SUPPLEMENTARY INFORMATION:

I. Background

The Center for Employment Training (CET) model of employment and training programs for out-of-school youth has gained national attention as a result of its strong employment impacts relative to comparable programs. Building on this success, the Department of Labor (DOL) began funding the CET Replication Project in December 1992, providing a grant for CET–San Jose, CA to assist other programs in implementing CET-like training. In 1994 DOL competitively awarded grants to select six of these programs in order to evaluate the effects of the CET model on participating youth. Six additional sites have also been selected from among CET programs in California and Nevada. The purpose of this study, A Random Assignment Evaluation of the CET Replication Sites, is to evaluate the CET model in the selected sites to assess whether it can be replicated outside of San Jose, and whether the replication sites have similarly positive employment impacts on out-of-school youth.

In order to assess the success of CET outside of San Jose, DOL has contracted with the Manpower Demonstration Research Corporation (MDRC) to evaluate the CET Replication Project. As part of this evaluation, follow-up information is currently being collected through a long-term follow-up telephone survey conducted approximately 30 months after the random assignment of youth. This information collection was approved under OMB No. 1205–0391, which is due to expire on May 31, 2001. This information collection request would revise the information collection to provide for a second wave of the survey to be completed approximately 54 months after random assignment of all youth.

The 30-Month and 54-Month Follow-Up Surveys will be used to examine the effects of this employment and training program on participants' outcomes two years after beginning the CET training. They will also assess the subsequent outcomes of comparable youth randomly assigned to a control group.

II. Review Focus

The Department of Labor is particularly interested in comments which:

- Evaluate whether the proposed collection of information is necessary for the proper performance of the functions of the agency, including whether the information will have practical utility;
- Evaluate the accuracy of the agency's estimate of the burden of the proposed collection of information, including the validity of the methodology and assumptions used;
- Enhance the quality, utility, and clarity of the information to be collected; and
- Minimize the burden of the collection of information on those who are to respond, including through the use of appropriate automated, electronic, mechanical, or other technological collection techniques or other forms of information technology, *e.g.,* permitting electronic submissions of responses.

III. Current Actions

This is a request for OMB approval of a revision of an existing information collection for the CET Replication Project funded by the Department of Labor (DOL). Information in the form of a follow-up phone or in-person survey will be collected from randomly assigned participants at each of the CET Replication Project sites at two points, approximately 30 months following their initial assignment to the program or control groups and again at 54 months after random assignment. The survey data will be utilized to analyze the impact of the CET program on participants' outcomes including education and training, employment, earnings, public assistance participation, childbearing, and other behaviors and activities. The findings will be directly relevant for the future development of employment and training policy for youth.

Type of Review: Revision.

Agency: Employment and Training Administration.

Title: CET Follow-Up Survey.

OMB Number: 1205–0391.

Affected Public: Participants in the CET Replication Project.

Total Respondents: 1,485.

Frequency: Two times.

Total Responses: 2,302.

Average Time per Response: 37 minutes.

Estimated Total Burden Hours: 1,420 hours.

Total Burden Cost (capital/startup): $0.

Total Burden Cost (operating/maintaining): $7,313.

Comments submitted in response to this comment request will be summarized and/or included in the request for Office of Management and Budget approval of the information collection request; they will also become a matter of public record.

Dated: November 3, 2000.

James Woods,

Division Chief, Division of Evaluation & Skills Assessment, Office of Policy and Research.

[FR Doc. 00–28904 Filed 11–9–00; 8:45 am]

BILLING CODE 4510–30–U

DEPARTMENT OF LABOR

Employment Standards Administration; Wage and Hour Division

Minimum Wages for Federal and Federally Assisted Construction; General Wage Determination Decisions

General wage determination decisions of the Secretary of Labor are issued in accordance with applicable law and are based on the information obtained by the Department of Labor from its study of local wage conditions and data made available from other sources. They specify the basic hourly wage rates and fringe benefits which are determined to be prevailing for the described classes of laborers and mechanics employed on construction projects of a similar character and in the localities specified therein.

The determinations in these decisions of prevailing rates and fringe benefits have been made in accordance with 29 CFR part 1, by authority of the Secretary of Labor pursuant to be provisions of the Davis-Bacon Act of March 3, 1931, as amended (46 Stat. 1494, as amended, 40 U.S.C. 276a) and of other Federal statutes referred to in 29 CFR part 1, Appendix, as well a such additional statutes as may from time to time be enacted containing provisions for the payment of wages determined to be prevailing by the Secretary of Labor in accordance with the Davis-Bacon Act. The prevailing rates and fringe benefits determined in these decision shall, in accordance with the provisions of the foregoing statutes, constitute the minimum wages payable on Federal and federally assisted construction projects to laborers and mechanics of the specified classes engaged on contract work of the character and in the localities described therein.

Good cause is hereby found for not utilizing notice and public comment procedure thereon prior to the issuance of these determinations as prescribed in 5 U.S.C. 553 and not providing for delay in the effective date as prescribed in that section, because the necessity to issue current construction industry wage determinations frequently and in large volume causes procedures to be impractical and contrary to the public interest.

General wage determination decisions, and modifications and supersedes decisions thereto, contain no expiration dates and are effective from their date of notice in the **Federal Register**, or on the date written notice is received by the agency, whichever is earlier. These decisions are to be used in accordance with the provisions of 29 CFR parts 1 and 5. Accordingly, the applicable decision, together with any modifications issued, must be made a part of every contract for performance of the described work within the geographic area indicated as required by an applicable Federal prevailing wage law and 29 CFR Part 5. The wage rates and fringe benefits, notice of which is published herein, and which are contained in the Government Printing Office (GPO) document entitled ''General Wage Determinations Issued Under The Davis-Bacon And Related Acts,'' shall be the minimum paid by contractors and subcontractors to laborers and mechanics.

Any person, organization, or government agency having an interest in the rates determined as prevailing is encouraged to submit wage rate and fringe benefit information for consideration by the Department. Further information and self-explanatory forms for the purpose of submitting this data may be obtained by writing to the U.S. Department of Labor, Employment Standards Administration, Wage and Hour Division, Division of Wage Determinations, 200 Constitution Avenue, NW., Room S–3014, Washington, DC 20210.

Modifications to General Wage Determination Decisions

The number of decisions listed in the Government Printing Office document entitled ''General Wage Determinations Issued Under the Davis—Bacon and related Acts'' being modified are listed by Volume and State. Dates of publication in the **Federal Register** are in parentheses following the decisions being modified.

Volume I

Massachusetts
- MA000001 (Feb. 11, 2000)
- MA000007 (Feb. 11, 2000)
- MA000017 (Feb. 11, 2000)
- MA000019 (Feb. 11, 2000)

New York
- NY000002 (Feb. 11, 2000)
- NY000003 (Feb. 11, 2000)
- NY000004 (Feb. 11, 2000)
- NY000005 (Feb. 11, 2000)
- NY000006 (Feb. 11, 2000)
- NY000007 (Feb. 11, 2000)
- NY000008 (Feb. 11, 2000)
- NY000010 (Feb. 11, 2000)
- NY000012 (Feb. 11, 2000)
- NY000015 (Feb. 11, 2000)
- NY000016 (Feb. 11, 2000)
- NY000017 (Feb. 11, 2000)
- NY000018 (Feb. 11, 2000)
- NY000020 (Feb. 11, 2000)
- NY000025 (Feb. 11, 2000)
- NY000026 (Feb. 11, 2000)
- NY000027 (Feb. 11, 2000)
- NY000028 (Feb. 11, 2000)
- NY000031 (Feb. 11, 2000)
- NY000032 (Feb. 11, 2000)
- NY000033 (Feb. 11, 2000)
- NY000037 (Feb. 11, 2000)
- NY000038 (Feb. 11, 2000)
- NY000039 (Feb. 11, 2000)
- NY000040 (Feb. 11, 2000)
- NY000041 (Feb. 11, 2000)
- NY000042 (Feb. 11, 2000)
- NY000043 (Feb. 11, 2000)
- NY000044 (Feb. 11, 2000)
- NY000048 (Feb. 11, 2000)
- NY000051 (Feb. 11, 2000)
- NY000066 (Feb. 11, 2000)
- NY000067 (Feb. 11, 2000)
- NY000072 (Feb. 11, 2000)
- NY000073 (Feb. 11, 2000)
- NY000079 (Feb. 11, 2000)

Vermont
- VT000001 (Feb. 11, 2000)
- VT000007 (Feb. 11, 2000)
- VT000042 (Feb. 11, 2000)

Volume II

Delaware
- DE000001 (Feb. 11, 2000)
- DE000002 (Feb. 11, 2000)
- DE000004 (Feb. 11, 2000)
- DE000005 (Feb. 11, 2000)
- DE000009 (Feb. 11, 2000)

Pennsylvania
- PA000012 (Feb. 11, 2000)

Volume III

Georgia
- GA000036 (Feb. 11, 2000)
- GA000093 (Feb. 11, 2000)
- GA000094 (Feb. 11, 2000)

Tennessee
- TN000001 (Feb. 11, 2000)
- TN000002 (Feb. 11, 2000)
- TN000003 (Feb. 11, 2000)
- TN000005 (Feb. 11, 2000)
- TN000018 (Feb. 11, 2000)
- TN000038 (Feb. 11, 2000)
- TN000039 (Feb. 11, 2000)

TN000040 (Feb. 11, 2000)
TN000041 (Feb. 11, 2000)
TN000042 (Feb. 11, 2000)
TN000043 (Feb. 11, 2000)
TN000045 (Feb. 11, 2000)
TN000048 (Feb. 11, 2000)
TN000061 (Feb. 11, 2000)
TN000062 (Feb. 11, 2000)

Volume IV

None

Volume V

Arkansas
AR000003 (Feb. 11, 2000)
Missouri
MO000001 (Feb. 11, 2000)
MO000006 (Feb. 11, 2000)
MO000009 (Feb. 11, 2000)
MO000013 (Feb. 11, 2000)
MO000050 (Feb. 11, 2000)
MO000063 (Feb. 11, 2000)

Volume VI

North Dakota
ND000002 (Feb. 11, 2000)
Utah
UT000009 (Feb. 11, 2000)
UT000011 (Feb. 11, 2000)
UT000012 (Feb. 11, 2000)
UT000013 (Feb. 11, 2000)
UT000015 (Feb. 11, 2000)
UT000023 (Feb. 11, 2000)
UT000024 (Feb. 11, 2000)
UT000025 (Feb. 11, 2000)
UT000026 (Feb. 11, 2000)
UT000028 (Feb. 11, 2000)
UT000029 (Feb. 11, 2000)

Volume VII

California
CA000002 (Feb. 11, 2000)
CA000004 (Feb. 11, 2000)
CA000009 (Feb. 11, 2000)
CA000028 (Feb. 11, 2000)
CA000029 (Feb. 11, 2000)
CA000030 (Feb. 11, 2000)
CA000031 (Feb. 11, 2000)
CA000032 (Feb. 11, 2000)
CA000034 (Feb. 11, 2000)
CA000035 (Feb. 11, 2000)
CA000036 (Feb. 11, 2000)
CA000037 (Feb. 11, 2000)
CA000038 (Feb. 11, 2000)
CA000039 (Feb. 11, 2000)
CA000040 (Feb. 11, 2000)
CA000041 (Feb. 11, 2000)
Nevada
NV000005 (Feb. 11, 2000)

General Wage Determination Publication

General wage determinations issued under the Davis-Bacon and related Acts, including those noted above, may be found in the Government Printing Office (GPO) document entitled ''General Wage Determinations Issued Under The Davis-Bacon and Related Acts.'' This publication is available at each of the 50 Regional Government Depository Libraries and many of the 1,400 Government Depository Libraries across the country.

The general wage determinations issued under the Davis-bacon and related Acts are available electronically by subscription to the FedWorld Bulletin Board System of the National Technical Information Service (NTIS) of the U.S. Department of Commerce at 1–800–363–2068

Hard-copy subscriptions may be purchased from: Superintendent of Documents, U.S. Government Printing Office, Washington, DC 20402, (202) 512–1800.

When ordering hard-copy subscription(s), be sure to specify the State(s) of interest, since subscriptions may be ordered for any or all of the seven separate volumes, arranged by State. Subscriptions include an annual edition (issued in January or February) which includes all current general wage determinations for the States covered by each volume. Throughout the remainder of the year, regular weekly updates are distributed to subscribers.

Dated: November 2, 2000.

Carl J. Poleskey,

Chief, Branch of Construction Wage Determinations.

[FR Doc. 00–28537 Filed 11–9–00; 8:45 am]

BILLING CODE 4510–27–M

DEPARTMENT OF LABOR

Pension and Welfare Benefits Administration

[Prohibited Transaction Exemption 2000–58]

Amendment to Prohibited Transaction Exemption (PTE) 97–34 Involving Bear, Stearns & Co. Inc., Prudential Securities Incorporated, et al. (D–10829)

AGENCY: Pension and Welfare Benefits Administration, Department of Labor.

ACTION: Grant of an amendment to the Underwriter Exemptions.[1]

SUMMARY: This document contains a final exemption issued by the Department of Labor (the Department) which amends the Underwriter Exemptions. The Underwriter Exemptions are individual exemptions that provide relief for the origination and operation of certain asset pool investment trusts and the acquisition, holding and disposition of certain asset-backed pass-through certificates representing undivided interests in those investment trusts. The amendment: (1) Permits, for certain categories of transactions, the offering of ''investment grade'' mortgage-backed securities and asset-backed securities which are either senior or subordinated; (2) permits the use of eligible interest rate swaps (both ratings dependent and non-ratings dependent) under circumstances described in this amendment; (3) permits the use of yield supplement agreements which involve notional principal amounts; and (4) makes certain changes to the Underwriter Exemptions that reflects the Department's current interpretation of the Underwriter Exemptions.

Finally, the amendment provides exemptive relief for transactions involving: (1) An Issuer of mortgage-backed securities or asset-backed securities which is a trust (including a grantor or owner trust), REMIC, FASIT, special purpose corporation, limited liability company or partnership and (2) mortgage-backed securities or asset-backed securities issued which are either debt or equity investments.

[1] The term ''Underwriter Exemptions'' refers to the following individual Prohibited Transaction Exemptions (PTEs): PTE 89–88, 54 FR 42582 (October 17, 1989); PTE 89–89, 54 FR 42569 (October 17, 1989); PTE 89–90, 54 FR 42597 (October 17, 1989); PTE 90–22, 55 FR 20542 (May 17, 1990); PTE 90–23, 55 FR 20545 (May 17, 1990); PTE 90–24, 55 FR 20548 (May 17, 1990); PTE 90–28, 55 FR 21456 (May 24, 1990); PTE 90–29, 55 FR 21459 (May 24, 1990); PTE 90–30, 55 FR 21461 (May 24, 1990); PTE 90–31, 55 FR 23144 (June 6, 1990); PTE 90–32, 55 FR 23147 (June 6, 1990); PTE 90–33, 55 FR 23151 (June 6, 1990); PTE 90–36, 55 FR 25903 (June 25, 1990); PTE 90–39, 55 FR 27713 (July 5, 1990); PTE 90–59, 55 FR 36724 (September 6, 1990); PTE 90–83, 55 FR 50250 (December 5, 1990); PTE 90–84, 55 FR 50252 (December 5, 1990); PTE 90–88, 55 FR 52899 (December 24, 1990); PTE 91–14, 55 FR 48178 (February 22, 1991); PTE 91–22, 56 FR 03277 (April 18, 1991); PTE 91–23, 56 FR 15936 (April 18, 1991); PTE 91–30, 56 FR 22452 (May 15, 1991); PTE 91–62, 56 FR 51406 (October 11, 1991); PTE 93–31, 58 FR 28620 (May 5, 1993); PTE 93–32, 58 FR 28623 (May 14, 1993); PTE 94–29, 59 FR 14675 (March 29, 1994); PTE 94–64, 59 FR 42312 (August 17, 1994); PTE 94–70, 59 FR 50014 (September 30, 1994); PTE 94–73, 59 FR 51213 (October 7, 1994); PTE 94–84, 59 FR 65400 (December 19, 1994); PTE 95–26, 60 FR 17586 (April 6, 1995); PTE 95–59, 60 FR 35938 (July 12, 1995); PTE 95–89, 60 FR 49011 (September 21, 1995); PTE 96–22, 61 FR 14828 (April 3, 1996); PTE 96–84, 61 FR 58234 (November 13, 1996); PTE 96–92, 61 FR 66334 (December 17, 1996); PTE 96–94, 61 FR 68787 (December 30, 1996); PTE 97–05, 62 FR 1926 (January 14, 1997); PTE 97–28, 62 FR 28515 (May 23, 1997); PTE 97–34, 62 FR 39021 (July 21, 1997); PTE 98–08, 63 FR 8498 (February 19, 1998); PTE 99–11, 64 FR 11046 (March 8, 1999); PTE 2000–19, 65 FR 25950 (May 4, 2000); PTE 2000–33, 65 FR 37171 (June 13, 2000); PTE 2000–41, 65 FR 51039 (August 22, 2000); and PTE 2000–55 (November, 2000).

In addition, the Department notes that it is also granting individual exemptive relief for: Deutsche Bank AG, New York Branch and Deutsche Morgan Grenfell/C.J. Lawrence Inc., Final Authorization Number (FAN) 97–03E (December 9, 1996); Credit Lyonnais Securities (USA) Inc., FAN 97–21E (September 10, 1997); ABN AMRO Inc., FAN 98–08E (April 27, 1998); and Ironwood Capital Partners Ltd., FAN 99–31E (December 20, 1999), which received the approval of the Department to engage in transactions substantially similar to the transactions described in the Underwriter Exemptions pursuant to PTE 96–62.

EFFECTIVE DATE: This amendment to the Underwriter Exemptions is effective for transactions occurring on or after August 23, 2000, except as otherwise provided in sections I.C., II.A.(4)(b), and III.JJ. of the amendment to the Underwriter Exemptions.

FOR FURTHER INFORMATION CONTACT: Wendy McColough of the Department, telephone (202) 219–8971. (This is not a toll-free number).

SUPPLEMENTARY INFORMATION: On August 23, 2000, notice was published in the **Federal Register** (65 FR 51454) of the pendency before the Department of a proposed exemption to amend PTE 97–34, 62 FR 39021 (July 21, 1997) (the 1997 Amendment). The 1997 Amendment amended over forty individual Underwriter Exemptions. The Underwriter Exemptions are a group of individual exemptions that provide substantially identical relief for the operation of certain asset pool investment trusts and the acquisition and holding by plans of certain asset-backed pass-through certificates representing interests in those trusts. These exemptions provide relief from certain of the restrictions of sections 406(a), 406(b) and 407(a) of the Act and from the taxes imposed by section 4975(a) and (b) of the Code, by reason of certain provisions of section 4975(c)(1) of the Code.

The amendment was requested by application dated October 22, 1999, and as restated in later submissions on behalf of Morgan Stanley & Co. Incorporated [2] (the Applicant). In preparing the application, the Applicant received input from members of The Bond Market Association (TBMA).

The Department proposed the amendment to this individual exemption pursuant to section 408(a) of the Act and section 4975(c)(2) of the Code, and in accordance with the procedures set forth in 29 CFR part 2570 (Subpart B) 55 FR 32836, 32847 (August 10, 1990).[3] In addition, the Department proposed to provide the same relief on its own motion pursuant to the authority described above for many of the other Underwriter Exemptions which have substantially similar terms and conditions.[4] The Department notes that it also proposed the same individual exemptive relief for: Deutsche Bank AG, New York Branch and Deutsche Morgan Grenfell/C.J. Lawrence Inc., FAN 97–03E (December 9, 1996); Credit Lyonnais Securities (USA) Inc., FAN 97–21E (September 10, 1997); ABN AMRO Inc., FAN 98–08E (April 27, 1998); and Ironwood Capital Partners Ltd., FAN 99–31E (December 20, 1999), which received the approval of the Department to engage in transactions substantially similar to the transactions described in the Underwriter Exemptions pursuant to PTE 96–62.

The notice set forth a summary of facts and representations contained in the application for exemption and referred interested persons to the application for a complete statement of the facts and representations. The application has been available for public inspection at the Department in Washington, DC.

The notice also invited interested persons to submit comments on the requested exemption to the Department. In addition, the notice stated that any interested person might submit a written request that a public hearing be held. The Department received three written comments in response to the proposed amendment. No requests for a hearing were received by the Department in regard to the proposed amendment.

The first commentator observed that it has been his experience that certain trustees of collectively bargained qualified plans may incur unnecessary risk with plan assets when they allow investment managers to purchase debt securities that can only be priced by the underwriter or manually priced by the investment manager. Plans that by their nature are ''marked to market'' for annual valuations, *i.e.*, defined contribution plans, may find that assets are unintentionally misstated for plan participants when there is a general disruption in the debt market. Similarly, defined benefit plans may be forced to hold assets to maturity when an investment manager buys a ''BBB'' securitization vehicle and the general interest rate market rises. According to the commentator, the underwriter may not make a secondary market when there is an absence of bidders for such issues.

The Department notes that the fiduciary responsibility provisions of the Act would apply to any decision made by a plan fiduciary or investment manager to purchase asset-backed securities or other debt securities as part of its investment program. In this regard, section 404(a) of the Act requires, among other things, that a fiduciary of a plan act prudently, solely in the interest of the plan's participants and beneficiaries, and for the exclusive purpose of providing benefits to participants and beneficiaries when making investment decisions on behalf of the plan. The Department's determination to expand the Underwriter Exemptions to permit the offering of ''investment grade'' asset backed securities, which may be senior or subordinated, should not be viewed as an endorsement by the Department of the suitability of specific securities for a particular plan. Rather, it is the responsibility of the plan fiduciary to act ''prudently'' with respect to the selection of suitable investments, taking into account the plan's particular facts and circumstances. The Department further notes that plan fiduciaries would be liable for any losses to the plan resulting from a decision to purchase asset-backed securities or other debt securities if such purchase was not prudent at the time the decision was made.

Another commentator was concerned that the proposed amendment may in some way limit the exemptive relief available under the previously granted Underwriter Exemptions and the 1997 Amendment. The commentator proposed that the following language be added to the preamble of the final exemption:

> Nothing in this final exemption limits the exemptive relief otherwise available under any of the Underwriter Exemptions, as in effect prior to the effective date of this final exemption, to transactions related to any securitization transaction that closed prior to the date of publication of this final exemption in the **Federal Register**.

In response to this comment, the Department notes that this amendment does not limit the exemptive relief otherwise available under any of the Underwriter Exemptions, the 1997 Amendment or the individual exemptive relief for entities which received the approval of the Department to engage in transactions substantially similar to the transactions described in the Underwriter Exemptions pursuant to PTE 96–62. In fact, the Department notes that this amendment expands the relief available under the Underwriter Exemptions. In the Department's view, those transactions which meet the requirements of the 1997 Amendment, would fall within the scope of the relief provided by this amendment.

The third commentator posed a question regarding the application of the

[2] PTE 90–24, 55 FR 20548 (May 17, 1990).

[3] Section 102 of Reorganization Plan No. 4 of 1978 (43 FR 47713, October 17, 1978, 5 U.S.C. App. 1 [1995]) generally transferred the authority of the Secretary of the Treasury to issue exemptions under section 4975(c)(2) of the Code to the Secretary of Labor. In the discussion of the exemption, references to sections 406 and 408 of the Act should be read to refer as well to the corresponding provisions of section 4975 of the Code.

[4] In this regard, the entities who received the other Underwriter Exemptions were contacted concerning their participation in this amendment process.

proposed amendment to subordinated and ''BBB'' rated securities that were issued prior to August 23, 2000. The Department notes that the amendment is applicable to the purchase by plans of subordinated and ''BBB'' rated securities after August 23, 2000, provided that these transactions meet the requirements set forth in the amendment.

The commentator further noted that the Department proposed to expand the scope of the Underwriter Exemptions to cover securitization transactions that use ''special purpose'' corporations, limited partnerships, limited liability companies and owner trust structures. As part of the proposed amendment, the Department required, under section II.A.(8), that certain provisions be included in the documents establishing the Issuer. The commentator was concerned that some of the new requirements under section II.A.(8) would also be applicable to securitization transactions that use traditional ''common law'' trust structures. As a result, the commentator requested that the Department clarify the requirements set forth in section II.A.(8) of the proposed amendment. The Department believes the following explanation will clarify the intended scope of the requirements of section II.A.(8) of the amendment.

The Applicant provided the following information to the Department during the comment period. Trusts are generally of two types under local or state law. Those referred to as ''common law trusts,'' and those referred to as ''owner trusts'' (or ''business trusts,'' for example, Delaware business trusts). While both types of trusts are created by contract between a settlor and a trustee for the benefit of beneficiaries, a common law trust does not exist as a separate entity and is governed under common law; whereas an owner trust is created under state statutes and is a separate legal entity. The terms ''grantor trust,'' ''REMIC,'' and ''FASIT'' are tax classifications.

The Department notes that this amendment generally is effective for transactions occurring on or after August 23, 2000. On that date, this amendment would apply to the expanded list of Issuers defined in section III.B. of the amendment. Accordingly, it is the view of the Department that section II.A.(8) is applicable to those Issuers that are owner trusts, partnerships, special purpose corporations or limited liability companies which meet the conditions of the amendment on or after August 23, 2000 including the requirements contained in section II.A.(8). Conversely, it is the view of the Department that section II.A.(8) would not apply to grantor trusts, REMICs or FASITs which were eligible for relief under the 1997 Amendment, provided that the conditions of that exemption were met.

Finally, the commentator requested that the Department clarify whether offshore entities (special purpose corporations, limited partnerships, limited liability companies and trusts organized under non-United States law) are permissible securitization vehicles under the amendment. The Department does not believe that a sufficient showing has been made that inclusion of offshore entities as securitization vehicles would be protective of the interests of participants and beneficiaries. Accordingly, it is the view of the Department that offshore entities are beyond the scope of relief provided by this amendment.

The Department notes that it has modified the definition of ''Qualified Plan Investor,'' at section III.HH. of the amendment, to clarify that this definition refers only to the swap agreements described at section II.A.(10) of the amendment.

General Information

The attention of interested persons is directed to the following:

(1) The fact that a transaction is the subject of an exemption under section 408(a) of the Act and section 4975(c)(2) of the Code does not relieve a fiduciary or other party in interest or disqualified person from certain other provisions of the Act and the Code, including any prohibited transaction provisions to which the exemption does not apply and the general fiduciary responsibility provisions of section 404 of the Act, which require, among other things, a fiduciary to discharge his or her duties respecting the plan solely in the interest of the participants and beneficiaries of the plan and in a prudent fashion in accordance with section 404(a)(1)(B) of the Act; nor does it affect the requirements of section 401(a) of the Code that the plan operate for the exclusive benefit of the employees of the employer maintaining the plan and their beneficiaries;

(2) In accordance with section 408(a) of the Act and section 4975(c)(2) of the Code and the procedures set forth in 29 CFR part 2570, Subpart B (55 FR 32836, 32847, August 10, 1990) and based upon the entire record, the Department finds that the exemption is administratively feasible, in the interests of the plans and their participants and beneficiaries and protective of the rights of the participants and beneficiaries;

(3) This exemption is supplemental to, and not in derogation of, any other provisions of the Act and/or the Code, including statutory or administrative exemptions and transitional rules. Furthermore, the fact that a transaction is subject to an administrative or statutory exemption is not dispositive of whether the transaction is in fact a prohibited transaction; and

(4) The availability of this exemption is subject to the express condition that the material facts and representations contained in the application are true and complete and accurately describe all material terms of the transactions which are the subjects of the exemption.

Exemption

Under section 408(a) of ERISA and section 4975(c)(2) of the Code and in accordance with the procedures set forth in 29 CFR Part 2570, subpart B (55 FR 32836, August 10, 1990), the Department amends the following individual Prohibited Transaction Exemptions (PTEs): PTE 89–88, 54 FR 42582 (October 17, 1989); PTE 89–89, 54 FR 42569 (October 17, 1989); PTE 89–90, 54 FR 42597 (October 17, 1989); PTE 90–22, 55 FR 20542 (May 17, 1990); PTE 90–23, 55 FR 20545 (May 17, 1990); PTE 90–24, 55 FR 20548 (May 17, 1990); PTE 90–28, 55 FR 21456 (May 24, 1990); PTE 90–29, 55 FR 21459 (May 24, 1990); PTE 90–30, 55 FR 21461 (May 24, 1990); PTE 90–31, 55 FR 23144 (June 6, 1990); PTE 90–32, 55 FR 23147 (June 6, 1990); PTE 90–33, 55 FR 23151 (June 6, 1990); PTE 90–36, 55 FR 25903 (June 25, 1990); PTE 90–39, 55 FR 27713 (July 5, 1990); PTE 90–59, 55 FR 36724 (September 6, 1990); PTE 90–83, 55 FR 50250 (December 5, 1990); PTE 90–84, 55 FR 50252 (December 5, 1990); PTE 90–88, 55 FR 52899 (December 24, 1990); PTE 91–14, 55 FR 48178 (February 22, 1991); PTE 91–22, 56 FR 03277 (April 18, 1991); PTE 91–23, 56 FR 15936 (April 18, 1991); PTE 91–30, 56 FR 22452 (May 15, 1991); PTE 91–62, 56 FR 51406 (October 11, 1991); PTE 93–31, 58 FR 28620 (May 5, 1993); PTE 93–32, 58 FR 28623 (May 14, 1993); PTE 94–29, 59 FR 14675 (March 29, 1994); PTE 94–64, 59 FR 42312 (August 17, 1994); PTE 94–70, 59 FR 50014 (September 30, 1994); PTE 94–73, 59 FR 51213 (October 7, 1994); PTE 94–84, 59 FR 65400 (December 19, 1994); PTE 95–26, 60 FR 17586 (April 6, 1995); PTE 95–59, 60 FR 35938 (July 12, 1995); PTE 95–89, 60 FR 49011 (September 21, 1995); PTE 96–22, 61 FR 14828 (April 3, 1996); PTE 96–84, 61 FR 58234 (November 13, 1996); PTE 96–92, 61 FR 66334 (December 17, 1996); PTE 96–94, 61 FR 68787 (December 30, 1996); PTE 97–05, 62 FR 1926 (January 14, 1997); PTE 97–28, 62 FR 28515 (May

23, 1997); PTE 97–34, 62 FR 39021 (July 21, 1997); PTE 98–08, 63 FR 8498 (February 19, 1998); PTE 99–11, 64 FR 11046 (March 8, 1999); PTE 2000–19, 65 FR 25950 (May 4, 2000); PTE 2000–33, 65 FR 37171 (June 13, 2000); PTE 2000–41, 65 FR 51039 (August 22, 2000); and PTE 2000–55 (November, 2000).

In addition, the Department notes that it is also granting individual exemptive relief for: Deutsche Bank AG, New York Branch and Deutsche Morgan Grenfell/C.J. Lawrence Inc., Final Authorization Number (FAN) 97–03E (December 9, 1996); Credit Lyonnais Securities (USA) Inc., FAN 97–21E (September 10, 1997); ABN AMRO Inc., FAN 98–08E (April 27, 1998); and Ironwood Capital Partners Ltd., FAN 99–31E (December 20, 1999), which received the approval of the Department to engage in transactions substantially similar to the transactions described in the Underwriter Exemptions pursuant to PTE 96–62.

I. Transactions

A. Effective for transactions occurring on or after August 23, 2000, the restrictions of sections 406(a) and 407(a) of the Act, and the taxes imposed by sections 4975(a) and (b) of the Code, by reason of section 4975(c)(1)(A) through (D) of the Code shall not apply to the following transactions involving Issuers and Securities evidencing interests therein:

(1) The direct or indirect sale, exchange or transfer of Securities in the initial issuance of Securities between the Sponsor or Underwriter and an employee benefit plan when the Sponsor, Servicer, Trustee or Insurer of an Issuer, the Underwriter of the Securities representing an interest in the Issuer, or an Obligor is a party in interest with respect to such plan;

(2) The direct or indirect acquisition or disposition of Securities by a plan in the secondary market for such Securities; and

(3) The continued holding of Securities acquired by a plan pursuant to subsection I.A.(1) or (2).

Notwithstanding the foregoing, section I.A. does not provide an exemption from the restrictions of sections 406(a)(1)(E), 406(a)(2) and 407 of the Act for the acquisition or holding of a Security on behalf of an Excluded Plan by any person who has discretionary authority or renders investment advice with respect to the assets of that Excluded Plan.[5]

B. Effective for transactions occurring on or after August 23, 2000, the restrictions of sections 406(b)(1) and 406(b)(2) of the Act and the taxes imposed by sections 4975(a) and (b) of the Code, by reason of section 4975(c)(1)(E) of the Code, shall not apply to:

(1) The direct or indirect sale, exchange or transfer of Securities in the initial issuance of Securities between the Sponsor or Underwriter and a plan when the person who has discretionary authority or renders investment advice with respect to the investment of plan assets in the Securities is (a) an Obligor with respect to 5 percent or less of the fair market value of obligations or receivables contained in the Issuer, or (b) an Affiliate of a person described in (a); if:

(i) The plan is not an Excluded Plan;

(ii) Solely in the case of an acquisition of Securities in connection with the initial issuance of the Securities, at least 50 percent of each class of Securities in which plans have invested is acquired by persons independent of the members of the Restricted Group and at least 50 percent of the aggregate interest in the Issuer is acquired by persons independent of the Restricted Group;

(iii) A plan's investment in each class of Securities does not exceed 25 percent of all of the Securities of that class outstanding at the time of the acquisition; and

(iv) Immediately after the acquisition of the Securities, no more than 25 percent of the assets of a plan with respect to which the person has discretionary authority or renders investment advice are invested in Securities representing an interest in an Issuer containing assets sold or serviced by the same entity.[6] For purposes of this paragraph (iv) only, an entity will not be considered to service assets contained in an Issuer if it is merely a Subservicer of that Issuer;

(2) The direct or indirect acquisition or disposition of Securities by a plan in the secondary market for such Securities, provided that the conditions set forth in paragraphs (i), (iii) and (iv) of subsection I.B.(1) are met; and

(3) The continued holding of Securities acquired by a plan pursuant to subsection I.B.(1) or (2).

C. Effective for transaction occurring on or after August 23, 2000, the restrictions of sections 406(a), 406(b) and 407(a) of the Act, and the taxes imposed by section 4975(a) and (b) of the Code by reason of section 4975(c) of the Code, shall not apply to transactions in connection with the servicing, management and operation of an Issuer, including the use of any Eligible Swap transaction; or, effective January 1, 1999, the defeasance of a mortgage obligation held as an asset of the Issuer through the substitution of a new mortgage obligation in a commercial mortgage-backed Designated Transaction, provided:

(1) Such transactions are carried out in accordance with the terms of a binding Pooling and Servicing Agreement;

(2) The Pooling and Servicing Agreement is provided to, or described in all material respects in the prospectus or private placement memorandum provided to, investing plans before they purchase Securities issued by the Issuer;[7] and

(3) The defeasance of a mortgage obligation and the substitution of a new mortgage obligation in a commercial mortgage-backed Designated Transaction meet the terms and conditions for such defeasance and substitution as are described in the prospectus or private placement memorandum for such Securities, which terms and conditions have been approved by a Rating Agency and does not result in the Securities receiving a lower credit rating from the Rating Agency than the current rating of the Securities.

Notwithstanding the foregoing, section I.C. does not provide an exemption from the restrictions of section 406(b) of the Act or from the taxes imposed by reason of section 4975(c) of the Code for the receipt of a fee by a Servicer of the Issuer from a person other than the Trustee or Sponsor, unless such fee constitutes a Qualified Administrative Fee.

D. Effective for transactions occurring on or after August 23, 2000, the restrictions of sections 406(a) and 407(a) of the Act, and the taxes imposed by section 4975(a) and (b) of the Code by reason of section 4975(c)(1)(A) through

[5] Section I.A. provides no relief from sections 406(a)(1)(E), 406(a)(2) and 407 of the Act for any person rendering investment advice to an Excluded Plan within the meaning of section 3(21)(A)(ii) of the Act, and regulation 29 CFR 2510.3–21(c).

[6] For purposes of this Underwriter Exemption, each plan participating in a commingled fund (such as a bank collective trust fund or insurance company pooled separate account) shall be considered to own the same proportionate undivided interest in each asset of the commingled fund as its proportionate interest in the total assets of the commingled fund as calculated on the most recent preceding valuation date of the fund.

[7] In the case of a private placement memorandum, such memorandum must contain substantially the same information that would be disclosed in a prospectus if the offering of the securities were made in a registered public offering under the Securities Act of 1933. In the Department's view, the private placement memorandum must contain sufficient information to permit plan fiduciaries to make informed investment decisions. For purposes of this exemption, references to ''prospectus'' include any related prospectus supplement thereto, pursuant to which Securities are offered to investors.

(D) of the Code, shall not apply to any transactions to which those restrictions or taxes would otherwise apply merely because a person is deemed to be a party in interest or disqualified person (including a fiduciary) with respect to a plan by virtue of providing services to the plan (or by virtue of having a relationship to such service provider described in section 3(14)(F), (G), (H) or (I) of the Act or section 4975(e)(2)(F), (G), (H) or (I) of the Code), solely because of the plan's ownership of Securities.

II. General Conditions

A. The relief provided under section I. is available only if the following conditions are met:

(1) The acquisition of Securities by a plan is on terms (including the Security price) that are at least as favorable to the plan as they would be in an arm's-length transaction with an unrelated party;

(2) The rights and interests evidenced by the Securities are not subordinated to the rights and interests evidenced by other Securities of the same Issuer, unless the Securities are issued in a Designated Transaction;

(3) The Securities acquired by the plan have received a rating from a Rating Agency at the time of such acquisition that is in one of the three (or in the case of Designated Transactions, four) highest generic rating categories;

(4) The Trustee is not an Affiliate of any member of the Restricted Group. For purposes of this requirement:

(a) The Trustee shall not be considered to be an Affiliate of a Servicer solely because the Trustee has succeeded to the rights and responsibilities of the Servicer pursuant to the terms of a Pooling and Servicing Agreement providing for such succession upon the occurrence of one or more events of default by the Servicer; and

(b) Effective for transactions occurring on or after January 1, 1998, subsection II.A.(4) will be deemed satisfied notwithstanding a Servicer becoming an Affiliate of the Trustee as the result of a merger or acquisition involving the Trustee, such Servicer and/or their Affiliates which occurs after the initial issuance of the Securities, provided that:

(i) such Servicer ceases to be an Affiliate of the Trustee no later than six months after the later of August 23, 2000 or the date such Servicer became an Affiliate of the Trustee; and

(ii) such Servicer did not breach any of its obligations under the Pooling and Servicing Agreement, unless such breach was immaterial and timely cured in accordance with the terms of such agreement, during the period from the closing date of such merger or acquisition transaction through the date the Servicer ceased to be an Affiliate of the Trustee;

(5) The sum of all payments made to and retained by the Underwriters in connection with the distribution or placement of Securities represents not more than Reasonable Compensation for underwriting or placing the Securities; the sum of all payments made to and retained by the Sponsor pursuant to the assignment of obligations (or interests therein) to the Issuer represents not more than the fair market value of such obligations (or interests); and the sum of all payments made to and retained by the Servicer represents not more than Reasonable Compensation for the Servicer's services under the Pooling and Servicing Agreement and reimbursement of the Servicer's reasonable expenses in connection therewith;

(6) The plan investing in such Securities is an ''accredited investor'' as defined in Rule 501(a)(1) of Regulation D of the Securities and Exchange Commission under the Securities Act of 1933; and

(7) In the event that the obligations used to fund a Issuer have not all been transferred to the Issuer on the Closing Date, additional obligations of the types specified in subsection III.B.(1) may be transferred to the Issuer during the Pre-Funding Period in exchange for amounts credited to the Pre-Funding Account, provided that:

(a) The Pre-Funding Limit is not exceeded;

(b) All such additional obligations meet the same terms and conditions for determining the eligibility of the original obligations used to create the Issuer (as described in the prospectus or private placement memorandum and/or Pooling and Servicing Agreement for such Securities), which terms and conditions have been approved by a Rating Agency. Notwithstanding the foregoing, the terms and conditions for determining the eligibility of an obligation may be changed if such changes receive prior approval either by a majority vote of the outstanding securityholders or by a Rating Agency;

(c) The transfer of such additional obligations to the Issuer during the Pre-Funding Period does not result in the Securities receiving a lower credit rating from a Rating Agency upon termination of the Pre-Funding Period than the rating that was obtained at the time of the initial issuance of the Securities by the Issuer;

(d) The weighted average annual percentage interest rate (the average interest rate) for all of the obligations held by the Issuer at the end of the Pre-Funding Period will not be more than 100 basis points lower than the average interest rate for the obligations which were transferred to the Issuer on the Closing Date;

(e) In order to ensure that the characteristics of the receivables actually acquired during the Pre-Funding Period are substantially similar to those which were acquired as of the Closing Date, the characteristics of the additional obligations will either be monitored by a credit support provider or other insurance provider which is independent of the Sponsor or an independent accountant retained by the Sponsor will provide the Sponsor with a letter (with copies provided to the Rating Agency, the Underwriter and the Trustee) stating whether or not the characteristics of the additional obligations conform to the characteristics of such obligations described in the prospectus, private placement memorandum and/or Pooling and Servicing Agreement. In preparing such letter, the independent accountant will use the same type of procedures as were applicable to the obligations which were transferred as of the Closing Date;

(f) The Pre-Funding Period shall be described in the prospectus or private placement memorandum provided to investing plans; and

(g) The Trustee of the Trust (or any agent with which the Trustee contracts to provide Trust services) will be a substantial financial institution or trust company experienced in trust activities and familiar with its duties, responsibilities and liabilities as a fiduciary under the Act. The Trustee, as the legal owner of the obligations in the Trust or the holder of a security interest in the obligations held by the Issuer, will enforce all the rights created in favor of securityholders of the Issuer, including employee benefit plans subject to the Act;

(8) In order to insure that the assets of the Issuer may not be reached by creditors of the Sponsor in the event of bankruptcy or other insolvency of the Sponsor:

(a) The legal documents establishing the Issuer will contain:

(i) Restrictions on the Issuer's ability to borrow money or issue debt other than in connection with the securitization;

(ii) Restrictions on the Issuer merging with another entity, reorganizing, liquidating or selling assets (other than in connection with the securitization);

(iii) Restrictions limiting the authorized activities of the Issuer to activities relating to the securitization;

(iv) If the Issuer is not a Trust, provisions for the election of at least one independent director/partner/member whose affirmative consent is required before a voluntary bankruptcy petition can be filed by the Issuer; and

(v) If the Issuer is not a Trust, requirements that each independent director/partner/member must be an individual that does not have a significant interest in, or other relationships with, the Sponsor or any of its Affiliates; and

(b) The Pooling and Servicing Agreement and/or other agreements establishing the contractual relationships between the parties to the securitization transaction will contain covenants prohibiting all parties thereto from filing an involuntary bankruptcy petition against the Issuer or initiating any other form of insolvency proceeding until after the Securities have been paid; and

(c) Prior to the issuance by the Issuer of any Securities, a legal opinion is received which states that either:

(i) A ''true sale'' of the assets being transferred to the Issuer by the Sponsor has occurred and that such transfer is not being made pursuant to a financing of the assets by the Sponsor; or

(ii) In the event of insolvency or receivership of the Sponsor, the assets transferred to the Issuer will not be part of the estate of the Sponsor;

(9) If a particular class of Securities held by any plan involves a Ratings Dependent or Non-Ratings Dependent Swap entered into by the Issuer, then each particular swap transaction relating to such Securities:

(a) Shall be an Eligible Swap;

(b) Shall be with an Eligible Swap Counterparty;

(c) In the case of a Ratings Dependent Swap, shall provide that if the credit rating of the counterparty is withdrawn or reduced by any Rating Agency below a level specified by the Rating Agency, the Servicer (as agent for the Trustee) shall, within the period specified under the Pooling and Servicing Agreement:

(i) Obtain a replacement swap agreement with an Eligible Swap Counterparty which is acceptable to the Rating Agency and the terms of which are substantially the same as the current swap agreement (at which time the earlier swap agreement shall terminate); or

(ii) Cause the swap counterparty to establish any collateralization or other arrangement satisfactory to the Rating Agency such that the then current rating by the Rating Agency of the particular class of Securities will not be withdrawn or reduced.

In the event that the Servicer fails to meet its obligations under this subsection II.A.(9)(c), plan securityholders will be notified in the immediately following Trustee's periodic report which is provided to securityholders, and sixty days after the receipt of such report, the exemptive relief provided under section I.C. will prospectively cease to be applicable to any class of Securities held by a plan which involves such Ratings Dependent Swap; provided that in no event will such plan securityholders be notified any later than the end of the second month that begins after the date on which such failure occurs.

(d) In the case of a Non-Ratings Dependent Swap, shall provide that, if the credit rating of the counterparty is withdrawn or reduced below the lowest level specified in section III.GG., the Servicer (as agent for the Trustee) shall within a specified period after such rating withdrawal or reduction:

(i) Obtain a replacement swap agreement with an Eligible Swap Counterparty, the terms of which are substantially the same as the current swap agreement (at which time the earlier swap agreement shall terminate); or

(ii) Cause the swap counterparty to post collateral with the Trustee in an amount equal to all payments owed by the counterparty if the swap transaction were terminated; or

(iii) Terminate the swap agreement in accordance with its terms; and

(e) Shall not require the Issuer to make any termination payments to the counterparty (other than a currently scheduled payment under the swap agreement) except from Excess Spread or other amounts that would otherwise be payable to the Servicer or the Sponsor;

(10) Any class of Securities, to which one or more swap agreements entered into by the Issuer applies, may be acquired or held in reliance upon this Underwriter Exemption only by Qualified Plan Investors; and

(11) Prior to the issuance of any debt securities, a legal opinion is received which states that the debt holders have a perfected security interest in the Issuer's assets.

B. Neither any Underwriter, Sponsor, Trustee, Servicer, Insurer or any Obligor, unless it or any of its Affiliates has discretionary authority or renders investment advice with respect to the plan assets used by a plan to acquire Securities, shall be denied the relief provided under section I., if the provision of subsection II.A.(6) is not satisfied with respect to acquisition or holding by a plan of such Securities, provided that (1) such condition is disclosed in the prospectus or private placement memorandum; and (2) in the case of a private placement of Securities, the Trustee obtains a representation from each initial purchaser which is a plan that it is in compliance with such condition, and obtains a covenant from each initial purchaser to the effect that, so long as such initial purchaser (or any transferee of such initial purchaser's Securities) is required to obtain from its transferee a representation regarding compliance with the Securities Act of 1933, any such transferees will be required to make a written representation regarding compliance with the condition set forth in subsection II.A.(6).

III. Definitions

For purposes of this exemption:

A. ''Security'' means:

(1) A pass-through certificate or trust certificate that represents a beneficial ownership interest in the assets of an Issuer which is a Trust and which entitles the holder to payments of principal, interest and/or other payments made with respect to the assets of such Trust; or

(2) A security which is denominated as a debt instrument that is issued by, and is an obligation of, an Issuer; with respect to which the Underwriter is either (i) the sole underwriter or the manager or co-manager of the underwriting syndicate, or (ii) a selling or placement agent.

B. ''Issuer'' means an investment pool, the corpus or assets of which are held in trust (including a grantor or owner Trust) or whose assets are held by a partnership, special purpose corporation or limited liability company (which Issuer may be a Real Estate Mortgage Investment Conduit (REMIC) or a Financial Asset Securitization Investment Trust (FASIT) within the meaning of section 860D(a) or section 860L, respectively, of the Code); and the corpus or assets of which consist solely of:

(1)(a) Secured consumer receivables that bear interest or are purchased at a discount (including, but not limited to, home equity loans and obligations secured by shares issued by a cooperative housing association); and/or

(b) Secured credit instruments that bear interest or are purchased at a discount in transactions by or between business entities (including, but not limited to, Qualified Equipment Notes Secured by Leases); and/or

(c) Obligations that bear interest or are purchased at a discount and which are

secured by single-family residential, multi-family residential and/or commercial real property (including obligations secured by leasehold interests on residential or commercial real property); and/or

(d) Obligations that bear interest or are purchased at a discount and which are secured by motor vehicles or equipment, or Qualified Motor Vehicle Leases; and/or

(e) Guaranteed governmental mortgage pool certificates, as defined in 29 CFR 2510.3–101(i)(2) [8]; and/or

(f) Fractional undivided interests in any of the obligations described in clauses (a)–(e) of this subsection B.(1).[9]

Notwithstanding the foregoing, residential and home equity loan receivables issued in Designated Transactions may be less than fully secured, provided that: (i) The rights and interests evidenced by the Securities issued in such Designated Transactions (as defined in section III.DD.) are not subordinated to the rights and interests evidenced by Securities of the same Issuer; (ii) such Securities acquired by the plan have received a rating from a Rating Agency at the time of such acquisition that is in one of the two highest generic rating categories; and (iii) any obligation included in the corpus or assets of the Issuer must be secured by collateral whose fair market value on the Closing Date of the Designated Transaction is at least equal to 80% of the sum of: (I) the outstanding principal balance due under the obligation which is held by the Issuer; and (II) the outstanding principal balance(s) of any other obligation(s) of higher priority (whether or not held by the Issuer) which are secured by the same collateral.

(2) Property which had secured any of the obligations described in subsection III.B.(1);

(3)(a) Undistributed cash or temporary investments made therewith maturing no later than the next date on which distributions are made to securityholders; and/or

(b) Cash or investments made therewith which are credited to an account to provide payments to securityholders pursuant to any Eligible Swap Agreement meeting the conditions of subsection II.A.(9) or pursuant to any Eligible Yield Supplement Agreement; and/or

(c) Cash transferred to the Issuer on the Closing Date and permitted investments made therewith which:

(i) Are credited to a Pre-Funding Account established to purchase additional obligations with respect to which the conditions set forth in paragraphs (a)–(g) of subsection II.A.(7) are met; and/or

(ii) Are credited to a Capitalized Interest Account; and

(iii) Are held by the Issuer for a period ending no later than the first distribution date to securityholders occurring after the end of the Pre-Funding Period.

For purposes of this paragraph (c) of subsection III.B.(3), the term ''permitted investments'' means investments which: (i) are either: (x) direct obligations of, or obligations fully guaranteed as to timely payment of principal and interest by, the United States or any agency or instrumentality thereof, provided that such obligations are backed by the full faith and credit of the United States or (y) have been rated (or the Obligor has been rated) in one of the three highest generic rating categories by a Rating Agency; (ii) are described in the Pooling and Servicing Agreement; and (iii) are permitted by the Rating Agency.

(4) Rights of the Trustee under the Pooling and Servicing Agreement, and rights under any insurance policies, third-party guarantees, contracts of suretyship, Eligible Yield Supplement Agreements, Eligible Swap Agreements meeting the conditions of subsection II.A.(9) or other credit support arrangements with respect to any obligations described in subsection III.B.(1).

Notwithstanding the foregoing, the term ''Issuer'' does not include any investment pool unless: (i) the assets of the type described in paragraphs (a)–(f) of subsection III.B.(1) which are contained in the investment pool have been included in other investment pools, (ii) Securities evidencing interests in such other investment pools have been rated in one of the three (or in the case of Designated Transactions, four) highest generic rating categories by a Rating Agency for at least one year prior to the plan's acquisition of Securities pursuant to this Underwriter Exemption, and (iii) Securities evidencing interests in such other investment pools have been purchased by investors other than plans for at least one year prior to the plan's acquisition of Securities pursuant to this Underwriter Exemption.

C. ''Underwriter'' means:

(1) An entity defined as an Underwriter in subsection III.C.(1) of each of the Underwriter Exemptions that are being amended by this exemption. In addition, the term Underwriter includes Deutsche Bank AG, New York Branch and Deutsche Morgan Grenfell/C.J. Lawrence Inc, Credit Lyonnais Securities (USA) Inc., ABN AMRO Inc. and Ironwood Capital Partners Ltd. (which received the approval of the Department to engage in transactions substantially similar to the transactions described in the Underwriter Exemptions pursuant to PTE 96–62);

(2) Any person directly or indirectly, through one or more intermediaries, controlling, controlled by or under common control with such entity; or

(3) Any member of an underwriting syndicate or selling group of which a person described in subsections III.C.(1) or (2) is a manager or co-manager with respect to the Securities.

D. ''Sponsor'' means the entity that organizes an Issuer by depositing obligations therein in exchange for Securities.

E. ''Master Servicer'' means the entity that is a party to the Pooling and Servicing Agreement relating to assets of the Issuer and is fully responsible for servicing, directly or through Subservicers, the assets of the Issuer.

F. ''Subservicer'' means an entity which, under the supervision of and on behalf of the Master Servicer, services loans contained in the Issuer, but is not a party to the Pooling and Servicing Agreement.

G. ''Servicer'' means any entity which services loans contained in the Issuer, including the Master Servicer and any Subservicer.

H. ''Trust'' means an Issuer which is a trust (including an owner trust, grantor trust or a REMIC or FASIT which is organized as a Trust).

I. ''Trustee'' means the Trustee of any Trust which issues Securities and also includes an Indenture Trustee. ''Indenture Trustee'' means the Trustee appointed under the indenture pursuant to which the subject Securities are issued, the rights of holders of the Securities are set forth and a security interest in the Trust assets in favor of

[8] In Advisory Opinion 99–05A (Feb. 22, 1999), the Department expressed its view that mortgage pool certificates guaranteed and issued by the Federal Agricultural Mortgage Corporation (''Farmer Mac'') meet the definition of a guaranteed governmental mortgage pool certificate as defined in 29 CFR 2510.3–101(i)(2).

[9] The Department wishes to take the opportunity to clarify its view that the definition of Issuer contained in subsection III.B. includes a two-tier structure under which Securities issued by the first Issuer, which contains a pool of receivables described above, are transferred to a second Issuer which issues Securities that are sold to plans. However, the Department is of the further view that, since the Underwriter Exemption generally provides relief only for the direct or indirect acquisition or disposition of Securities that are not subordinated, no relief would be available if the Securities held by the second Issuer were subordinated to the rights and interests evidenced by other Securities issued by the first Issuer, unless such Securities were issued in a Designated Transaction.

the holders of the Securities is created. The Trustee or the Indenture Trustee is also a party to or beneficiary of all the documents and instruments transferred to the Issuer, and as such, has both the authority to, and the responsibility for, enforcing all the rights created thereby in favor of holders of the Securities, including those rights arising in the event of default by the servicer.

J. ''Insurer'' means the insurer or guarantor of, or provider of other credit support for, an Issuer. Notwithstanding the foregoing, a person is not an insurer solely because it holds Securities representing an interest in an Issuer which are of a class subordinated to Securities representing an interest in the same Issuer.

K. ''Obligor'' means any person, other than the Insurer, that is obligated to make payments with respect to any obligation or receivable included in the Issuer. Where an Issuer contains Qualified Motor Vehicle Leases or Qualified Equipment Notes Secured by Leases, ''Obligor'' shall also include any owner of property subject to any lease included in the Issuer, or subject to any lease securing an obligation included in the Issuer.

L. ''Excluded Plan'' means any plan with respect to which any member of the Restricted Group is a ''plan sponsor'' within the meaning of section 3(16)(B) of the Act.

M. ''Restricted Group'' with respect to a class of Securities means:

(1) Each Underwriter;

(2) Each Insurer;

(3) The Sponsor;

(4) The Trustee;

(5) Each Servicer;

(6) Any Obligor with respect to obligations or receivables included in the Issuer constituting more than 5 percent of the aggregate unamortized principal balance of the assets in the Issuer, determined on the date of the initial issuance of Securities by the Issuer;

(7) Each counterparty in an Eligible Swap Agreement; or

(8) Any Affiliate of a person described in subsections III.M.(1)–(7).

N. ''Affiliate'' of another person includes:

(1) Any person directly or indirectly, through one or more intermediaries, controlling, controlled by, or under common control with such other person;

(2) Any officer, director, partner, employee, relative (as defined in section 3(15) of the Act), a brother, a sister, or a spouse of a brother or sister of such other person; and

(3) Any corporation or partnership of which such other person is an officer, director or partner.

O. ''Control'' means the power to exercise a controlling influence over the management or policies of a person other than an individual.

P. A person will be ''independent'' of another person only if:

(1) Such person is not an Affiliate of that other person; and

(2) The other person, or an Affiliate thereof, is not a fiduciary who has investment management authority or renders investment advice with respect to any assets of such person.

Q. ''Sale'' includes the entrance into a Forward Delivery Commitment, provided:

(1) The terms of the Forward Delivery Commitment (including any fee paid to the investing plan) are no less favorable to the plan than they would be in an arm's-length transaction with an unrelated party;

(2) The prospectus or private placement memorandum is provided to an investing plan prior to the time the plan enters into the Forward Delivery Commitment; and

(3) At the time of the delivery, all conditions of this Underwriter Exemption applicable to sales are met.

R. ''Forward Delivery Commitment'' means a contract for the purchase or sale of one or more Securities to be delivered at an agreed future settlement date. The term includes both mandatory contracts (which contemplate obligatory delivery and acceptance of the Securities) and optional contracts (which give one party the right but not the obligation to deliver Securities to, or demand delivery of Securities from, the other party).

S. ''Reasonable Compensation'' has the same meaning as that term is defined in 29 CFR 2550.408c–2.

T. ''Qualified Administrative Fee'' means a fee which meets the following criteria:

(1) The fee is triggered by an act or failure to act by the Obligor other than the normal timely payment of amounts owing in respect of the obligations;

(2) The Servicer may not charge the fee absent the act or failure to act referred to in subsection III.T.(1);

(3) The ability to charge the fee, the circumstances in which the fee may be charged, and an explanation of how the fee is calculated are set forth in the Pooling and Servicing Agreement; and

(4) The amount paid to investors in the Issuer will not be reduced by the amount of any such fee waived by the Servicer.

U. ''Qualified Equipment Note Secured By A Lease'' means an equipment note:

(1) Which is secured by equipment which is leased;

(2) Which is secured by the obligation of the lessee to pay rent under the equipment lease; and

(3) With respect to which the Issuer's security interest in the equipment is at least as protective of the rights of the Issuer as the Issuer would have if the equipment note were secured only by the equipment and not the lease.

V. ''Qualified Motor Vehicle Lease'' means a lease of a motor vehicle where:

(1) The Issuer owns or holds a security interest in the lease;

(2) The Issuer owns or holds a security interest in the leased motor vehicle; and

(3) The Issuer's security interest in the leased motor vehicle is at least as protective of the Issuer's rights as the Issuer would receive under a motor vehicle installment loan contract.

W. ''Pooling and Servicing Agreement'' means the agreement or agreements among a Sponsor, a Servicer and the Trustee establishing a Trust. ''Pooling and Servicing Agreement'' also includes the indenture entered into by the Issuer and the Indenture Trustee.

X. ''Rating Agency'' means Standard & Poor's Ratings Services, a division of The McGraw-Hill Companies Inc., Moody's Investors Service, Inc., Duff & Phelps Credit Rating Co., Fitch ICBA, Inc. or any successors thereto.

Y. ''Capitalized Interest Account'' means an Issuer account: (i) Which is established to compensate securityholders for shortfalls, if any, between investment earnings on the Pre-Funding Account and the interest rate payable under the Securities; and (ii) which meets the requirements of paragraph (c) of subsection III.B.(3).

Z. ''Closing Date'' means the date the Issuer is formed, the Securities are first issued and the Issuer's assets (other than those additional obligations which are to be funded from the Pre-Funding Account pursuant to subsection II.A.(7)) are transferred to the Issuer.

AA. ''Pre-Funding Account'' means an Issuer account: (i) Which is established to purchase additional obligations, which obligations meet the conditions set forth in paragraph (a)–(g) of subsection II.A.(7); and (ii) which meets the requirements of paragraph (c) of subsection III.B.(3).

BB. ''Pre-Funding Limit'' means a percentage or ratio of the amount allocated to the Pre-Funding Account, as compared to the total principal amount of the Securities being offered, which is less than or equal to: (i) 40 percent, effective for transactions occurring on or after January 1, 1992, but prior to May 23, 1997; and (ii) 25 percent, for transactions occurring on or after May 23, 1997.

CC. ''Pre-Funding Period'' means the period commencing on the Closing Date and ending no later than the earliest to occur of: (i) The date the amount on deposit in the Pre-Funding Account is less than the minimum dollar amount specified in the Pooling and Servicing Agreement; (ii) the date on which an event of default occurs under the Pooling and Servicing Agreement or (iii) the date which is the later of three months or ninety days after the Closing Date.

DD. ''Designated Transaction'' means a securitization transaction in which the assets of the Issuer consist of secured consumer receivables, secured credit instruments or secured obligations that bear interest or are purchased at a discount and are: (i) Motor vehicle, home equity and/or manufactured housing consumer receivables; and/or (ii) motor vehicle credit instruments in transactions by or between business entities; and/or (iii) single-family residential, multi-family residential, home equity, manufactured housing and/or commercial mortgage obligations that are secured by single-family residential, multi-family residential, commercial real property or leasehold interests therein. For purposes of this section III.DD., the collateral securing motor vehicle consumer receivables or motor vehicle credit instruments may include motor vehicles and/or Qualified Motor Vehicle Leases.

EE. ''Ratings Dependent Swap'' means an interest rate swap, or (if purchased by or on behalf of the Issuer) an interest rate cap contract, that is part of the structure of a class of Securities where the rating assigned by the Rating Agency to any class of Securities held by any plan is dependent on the terms and conditions of the swap and the rating of the counterparty, and if such Security rating is not dependent on the existence of the swap and rating of the counterparty, such swap or cap shall be referred to as a ''Non-Ratings Dependent Swap''. With respect to a Non-Ratings Dependent Swap, each Rating Agency rating the Securities must confirm, as of the date of issuance of the Securities by the Issuer, that entering into an Eligible Swap with such counterparty will not affect the rating of the Securities.

FF. ''Eligible Swap'' means a Ratings Dependent or Non-Ratings Dependent Swap:

(1) Which is denominated in U.S. dollars;

(2) Pursuant to which the Issuer pays or receives, on or immediately prior to the respective payment or distribution date for the class of Securities to which the swap relates, a fixed rate of interest, or a floating rate of interest based on a publicly available index (e.g., LIBOR or the U.S. Federal Reserve's Cost of Funds Index (COFI)), with the Issuer receiving such payments on at least a quarterly basis and obligated to make separate payments no more frequently than the counterparty, with all simultaneous payments being netted;

(3) Which has a notional amount that does not exceed either: (i) The principal balance of the class of Securities to which the swap relates, or (ii) the portion of the principal balance of such class represented solely by those types of corpus or assets of the Issuer referred to in subsections III.B.(1), (2) and (3);

(4) Which is not leveraged (i.e., payments are based on the applicable notional amount, the day count fractions, the fixed or floating rates designated in subsection III.FF.(2), and the difference between the products thereof, calculated on a one to one ratio and not on a multiplier of such difference);

(5) Which has a final termination date that is either the earlier of the date on which the Issuer terminates or the related class of securities is fully repaid; and

(6) Which does not incorporate any provision which could cause a unilateral alteration in any provision described in subsections III.FF.(1) through (4) without the consent of the Trustee.

GG. ''Eligible Swap Counterparty'' means a bank or other financial institution which has a rating, at the date of issuance of the Securities by the Issuer, which is in one of the three highest long-term credit rating categories, or one of the two highest short-term credit rating categories, utilized by at least one of the Rating Agencies rating the Securities; provided that, if a swap counterparty is relying on its short-term rating to establish eligibility under the Underwriter Exemption, such swap counterparty must either have a long-term rating in one of the three highest long-term rating categories or not have a long-term rating from the applicable Rating Agency, and provided further that if the class of Securities with which the swap is associated has a final maturity date of more than one year from the date of issuance of the Securities, and such swap is a Ratings Dependent Swap, the swap counterparty is required by the terms of the swap agreement to establish any collateralization or other arrangement satisfactory to the Rating Agencies in the event of a ratings downgrade of the swap counterparty.

HH. ''Qualified Plan Investor'' means a plan investor or group of plan investors on whose behalf the decision to purchase Securities is made by an appropriate independent fiduciary that is qualified to analyze and understand the terms and conditions of any swap transaction used by the Issuer and the effect such swap would have upon the credit ratings of the Securities. For purposes of the Underwriter Exemption, such a fiduciary is either:

(1) A ''qualified professional asset manager'' (QPAM),[10] as defined under Part V(a) of PTE 84–14, 49 FR 9494, 9506 (March 13, 1984);

(2) An ''in-house asset manager'' (INHAM),[11] as defined under Part IV(a) of PTE 96–23, 61 FR 15975, 15982 (April 10, 1996); or

(3) A plan fiduciary with total assets under management of at least $100 million at the time of the acquisition of such Securities.

II. ''Excess Spread'' means, as of any day funds are distributed from the Issuer, the amount by which the interest allocated to Securities exceeds the amount necessary to pay interest to securityholders, servicing fees and expenses.

JJ. ''Eligible Yield Supplement Agreement'' means any yield supplement agreement, similar yield maintenance arrangement or, if purchased by or on behalf of the Issuer, an interest rate cap contract to supplement the interest rates otherwise payable on obligations described in subsection III.B.(1). Effective for transactions occurring on or after April 7, 1998, such an agreement or arrangement may involve a notional principal contract provided that:

(1) It is denominated in U.S. dollars;

(2) The Issuer receives on, or immediately prior to the respective payment date for the Securities covered by such agreement or arrangement, a fixed rate of interest or a floating rate of interest based on a publicly available index (e.g., LIBOR or COFI), with the

[10] PTE 84–14 provides a class exemption for transactions between a party in interest with respect to an employee benefit plan and an investment fund (including either a single customer or pooled separate account) in which the plan has an interest, and which is managed by a QPAM, provided certain conditions are met. QPAMs (e.g., banks, insurance companies, registered investment advisers with total client assets under management in excess of $50 million) are considered to be experienced investment managers for plan investors that are aware of their fiduciary duties under ERISA.

[11] PTE 96–23 permits various transactions involving employee benefit plans whose assets are managed by an INHAM, an entity which is generally a subsidiary of an employer sponsoring the plan which is a registered investment adviser with management and control of total assets attributable to plans maintained by the employer and its affiliates which are in excess of $50 million.

Issuer receiving such payments on at least a quarterly basis;

(3) It is not ''leveraged'' as described in subsection III.FF.(4);

(4) It does not incorporate any provision which would cause a unilateral alteration in any provision described in subsections III.JJ.(1)–(3) without the consent of the Trustee;

(5) It is entered into by the Issuer with an Eligible Swap Counterparty; and

(6) It has a notional amount that does not exceed either: (i) the principal balance of the class of Securities to which such agreement or arrangement relates, or (ii) the portion of the principal balance of such class represented solely by those types of corpus or assets of the Issuer referred to in subsections III.B.(1), (2) and (3).

IV. Modifications

For the Underwriter Exemptions provided to Residential Funding Corporation, Residential Funding Mortgage Securities, Inc., et al. and GE Capital Mortgage Services, Inc. and GECC Capital Markets (the Applicants) (PTEs 94–29 and 94–73, respectively);

A. Section III.A. of this exemption is modified to read as follows:

A. ''Security'' means:

(1) A pass-through certificate or trust certificate that represents a beneficial ownership interest in the assets of an Issuer which is a Trust and which entitles the holder to payments of principal, interest and/or other payments made with respect to the assets of such Trust; or

(2) A security which is denominated as a debt instrument that is issued by, and is an obligation of, an Issuer; with respect to which (i) one of the Applicants or any of its Affiliates is the Sponsor, [and] an entity which has received from the Department an individual prohibited transaction exemption relating to Securities which is similar to this exemption, is the sole underwriter or the manager or co-manager of the underwriting syndicate or a selling or placement agent or (ii) one of the Applicants or any of its Affiliates is the sole underwriter or the manager or co-manager of the underwriting syndicate, or a selling or placement agent.

B. Section III.C. of this exemption is modified to read as follows:

C. Underwriter means:

(1) An entity defined as an Underwriter in subsection III.C.(1) of each of the Underwriter Exemptions that are being amended by this exemption. In addition, the term Underwriter includes Ironwood Capital Partners Ltd., Deutsche Bank AG, New York Branch and Deutsche Morgan Grenfell/C.J. Lawrence Inc.; ABN AMRO and Credit Lyonnais Securities, Inc. (which received the approval of the Department to engage in transactions substantially similar to the transactions described in the Underwriter Exemptions pursuant to PTE 96–62);

(2) Any person directly or indirectly, through one or more intermediaries, controlling, controlled by or under common control with such entity;

(3) Any member of an underwriting syndicate or selling group of which a person described in subsections III.C.(1) or (2) above is a manager or co-manager with respect to the Securities; or

(4) Any entity which has received from the Department an individual prohibited transaction exemption relating to Securities which is similar to this exemption.

I. Effective Date

This exemption is effective for transactions occurring on or after August 23, 2000, except as otherwise provided in section I.C., subsection II.A.(4)(b), and section III.JJ. of the exemption. Section I.C., relating to the defeasance of mortgage obligations, is applicable to transactions occurring on or after January 1, 1999; subsection II.A.(4)(b) is applicable to transactions occurring on or after January 1, 1998; and section III.JJ., relating to Eligible Yield Supplement Agreements involving notional principal contracts, is applicable to transactions occurring on or after April 7, 1998.

Signed at Washington, D.C., this day of November, 2000.

Ivan L. Strasfeld,

Director of Exemption, Determinations, Pension and Welfare Benefits Administration, U.S. Department of Labor.

[FR Doc. 00–28855 Filed 11–9–00; 8:45 am]

BILLING CODE 4510–29–P

DEPARTMENT OF LABOR

Pension and Welfare Benefits Administration

[Prohibited Transaction Exemption 2000–55; Exemption Application No. D–10863, et al.]

Grant of Individual Exemptions; Country Securities Corporation (Countrywide)

AGENCY: Pension and Welfare Benefits Administration, Labor.

ACTION: Grant of individual exemptions.

SUMMARY: This document contains exemptions issued by the Department of Labor (the Department) from certain of the prohibited transaction restrictions of the Employee Retirement Income Security Act of 1974 (the Act) and/or the Internal Revenue Code of 1986 (the Code).

Notices were published in the **Federal Register** of the pendency before the Department of proposals to grant such exemptions. The notices set forth a summary of facts and representations contained in each application for exemption and referred interested persons to the respective applications for a complete statement of the facts and representations. The applications have been available for public inspection at the Department in Washington, DC. The notices also invited interested persons to submit comments on the requested exemptions to the Department. In addition the notices stated that any interested person might submit a written request that a public hearing be held (where appropriate). The applicants have represented that they have complied with the requirements of the notification to interested persons. No public comments and no requests for a hearing, unless otherwise stated, were received by the Department.

The notices of proposed exemption were issued and the exemptions are being granted solely by the Department because, effective December 31, 1978, section 102 of Reorganization Plan No. 4 of 1978, 5 U.S.C. App. 1 (1996), transferred the authority of the Secretary of the Treasury to issue exemptions of the type proposed to the Secretary of Labor.

Statutory Findings

In accordance with section 408(a) of the Act and/or section 4975(c)(2) of the Code and the procedures set forth in 29 CFR Part 2570, Subpart B (55 FR 32836, 32847, August 10, 1990) and based upon the entire record, the Department makes the following findings:

(a) The exemptions are administratively feasible;

(b) They are in the interests of the plans and their participants and beneficiaries; and

(c) They are protective of the rights of the participants and beneficiaries of the plans.

Countrywide Securities Corporation (Countrywide) Located in Calabasas, California

[Prohibited Transaction Exemption 2000–55; Exemption Application No. D–10863]

Exemption

I. Transactions

A. Effective January 28, 2000, the restrictions of sections 406(a) and 407(a) of the Act, and the taxes imposed by

section 4975(a) and (b) of the Code by reason of section 4975(c)(1)(A) through (D) of the Code, shall not apply to the following transactions involving trusts and certificates evidencing interests therein:

(1) The direct or indirect sale, exchange or transfer of certificates in the initial issuance of certificates between the sponsor or underwriter and an employee benefit plan when the sponsor, servicer, trustee or insurer of a trust, the underwriter of the certificates representing an interest in the trust, or an obligor is a party in interest with respect to such plan;

(2) The direct or indirect acquisition or disposition of certificates by a plan in the secondary market for such certificates; and

(3) The continued holding of certificates acquired by a plan pursuant to subsection I.A.(1) or (2). Notwithstanding the foregoing, section I.A. does not provide an exemption from the restrictions of sections 406(a)(1)(E), 406(a)(2) and 407 for the acquisition or holding of a certificate on behalf of an Excluded Plan by any person who has discretionary authority or renders investment advice with respect to the assets of that Excluded Plan.[1]

B. Effective January 28, 2000, the restrictions of sections 406(b)(1) and 406(b)(2) of the Act, and the taxes imposed by section 4975(a) and (b) of the Code by reason of section 4975(c)(1)(E) of the Code, shall not apply to:

(1) The direct or indirect sale, exchange or transfer of certificates in the initial issuance of certificates between the sponsor or underwriter and a plan when the person who has discretionary authority or renders investment advice with respect to the investment of plan assets in the certificates is (a) an obligor with respect to 5 percent or less of the fair market value of obligations or receivables contained in the trust, or (b) an affiliate of a person described in (a); if:

(i) The plan is not an Excluded Plan;

(ii) Solely in the case of an acquisition of certificates in connection with the initial issuance of the certificates, at least 50 percent of each class of certificates in which plans have invested is acquired by persons independent of the members of the Restricted Group and at least 50 percent of the aggregate interest in the trust is acquired by persons independent of the Restricted Group;

(iii) A plan's investment in each class of certificates does not exceed 25 percent of all of the certificates of that class outstanding at the time of the acquisition; and

(iv) Immediately after the acquisition of the certificates, no more than 25 percent of the assets of a plan with respect to which the person has discretionary authority or renders investment advice are invested in certificates representing an interest in a trust containing assets sold or serviced by the same entity.[2] For purposes of this paragraph B.(1)(iv) only, an entity will not be considered to service assets contained in a trust if it is merely a subservicer of that trust;

(2) The direct or indirect acquisition or disposition of certificates by a plan in the secondary market for such certificates, provided that the conditions set forth in paragraphs B.(1)(i), (iii) and (iv) are met; and

(3) The continued holding of certificates acquired by a plan pursuant to subsection I.B.(1) or (2).

C. Effective January 28, 2000, the restrictions of sections 406(a), 406(b) and 407(a) of the Act, and the taxes imposed by section 4975(a) and (b) of the Code by reason of section 4975(c) of the Code, shall not apply to transactions in connection with the servicing, management and operation of a trust, provided:

(1) Such transactions are carried out in accordance with the terms of a binding pooling and servicing agreement; and

(2) The pooling and servicing agreement is provided to, or described in all material respects in, the prospectus or private placement memorandum provided to investing plans before they purchase certificates issued by the trust.[3]

Notwithstanding the foregoing, section I.C. does not provide an exemption from the restrictions of section 406(b) of the Act, or from the taxes imposed by reason of section 4975(c) of the Code, for the receipt of a fee by a servicer of the trust from a person other than the trustee or sponsor, unless such fee constitutes a ''qualified administrative fee'' as defined in section III.S.

D. Effective January 28, 2000, the restrictions of sections 406(a) and 407(a) of the Act, and the taxes imposed by sections 4975(a) and (b) of the Code by reason of sections 4975(c)(1)(A) through (D) of the Code, shall not apply to any transactions to which those restrictions or taxes would otherwise apply merely because a person is deemed to be a party in interest or disqualified person (including a fiduciary) with respect to a plan by virtue of providing services to the plan (or by virtue of having a relationship to such service provider described in section 3(14)(F), (G), (H) or (I) of the Act or section 4975(e)(2)(F), (G), (H) or (I) of the Code), solely because of the plan's ownership of certificates.

II. General Conditions

A. The relief provided under Part I is available only if the following conditions are met:

(1) The acquisition of certificates by a plan is on terms (including the certificate price) that are at least as favorable to the plan as they would be in an arm's-length transaction with an unrelated party;

(2) The rights and interests evidenced by the certificates are not subordinated to the rights and interests evidenced by other certificates of the same trust;

(3) The certificates acquired by the plan have received a rating from a Rating Agency (as defined in section III.W.) at the time of such acquisition that is in one of the three highest generic rating categories;

(4) The trustee is not an affiliate of any other member of the Restricted Group. However, the trustee shall not be considered to be an affiliate of a servicer solely because the trustee has succeeded to the rights and responsibilities of the servicer pursuant to the terms of a pooling and servicing agreement providing for such succession upon the occurrence of one or more events of default by the servicer;

(5) The sum of all payments made to and retained by the underwriters in connection with the distribution or placement of certificates represents not more than reasonable compensation for underwriting or placing the certificates; the sum of all payments made to and retained by the sponsor pursuant to the assignment of obligations (or interests therein) to the trust represents not more

[1] Section I.A. provides no relief from sections 406(a)(1)(E), 406(a)(2) and 407 for any person rendering investment advice to an Excluded Plan within the meaning of section 3(21)(A)(ii) and regulation 29 CFR 2510.3–21(c).

[2] For purposes of this exemption, each plan participating in a commingled fund (such as a bank collective trust fund or insurance company pooled separate account) shall be considered to own the same proportionate undivided interest in each asset of the commingled fund as its proportionate interest in the total assets of the commingled fund as calculated on the most recent preceding valuation date of the fund.

[3] In the case of a private placement memorandum, such memorandum must contain substantially the same information that would be disclosed in a prospectus if the offering of the certificates were made in a registered public offering under the Securities Act of 1933. In the Department's view, the private placement memorandum must contain sufficient information to permit plan fiduciaries to make informed investment decisions. For purposes of this exemption, references to ''prospectus'' include any related prospectus supplement thereto, pursuant to which certificates are offered to investors.

than the fair market value of such obligations (or interests); and the sum of all payments made to and retained by the servicer represents not more than reasonable compensation for the servicer's services under the pooling and servicing agreement and reimbursement of the servicer's reasonable expenses in connection therewith;

(6) The plan investing in such certificates is an ''accredited investor'' as defined in Rule 501(a)(1) of Regulation D of the Securities and Exchange Commission under the Securities Act of 1933; and

(7) In the event that the obligations used to fund a trust have not all been transferred to the trust on the closing date, additional obligations as specified in subsection III.B.(1) may be transferred to the trust during the pre-funding period (as defined in section III.BB.) in exchange for amounts credited to the pre-funding account (as defined in section III.Z.), provided that:

(a) The pre-funding limit (as defined in section III.AA.) is not exceeded;

(b) All such additional obligations meet the same terms and conditions for eligibility as those of the original obligations used to create the trust corpus (as described in the prospectus or private placement memorandum and/or pooling and servicing agreement for such certificates), which terms and conditions have been approved by a Rating Agency. Notwithstanding the foregoing, the terms and conditions for determining the eligibility of an obligation may be changed if such changes receive prior approval either by a majority of the outstanding certificateholders or by a Rating Agency;

(c) The transfer of such additional obligations to the trust during the pre-funding period does not result in the certificates receiving a lower credit rating from a rating agency upon termination of the pre-funding period than the rating that was obtained at the time of the initial issuance of the certificates by the trust;

(d) The weighted average annual percentage interest rate (the average interest rate) for all of the obligations in the trust at the end of the pre-funding period will not be more than 100 basis points lower than the average interest rate for the obligations which were transferred to the trust on the closing date;

(e) In order to ensure that the characteristics of the receivables actually acquired during the pre-funding period are substantially similar to those which were acquired as of the closing date, the characteristics of the additional obligations will be either monitored by a credit support provider or other insurance provider which is independent of the sponsor, or an independent accountant retained by the sponsor will provide the sponsor with a letter (with copies provided to the Rating Agency, the underwriter and the trustees) stating whether or not the characteristics of the additional obligations conform to the characteristics of such obligations described in the prospectus, private placement memorandum and/or pooling and servicing agreement. In preparing such letter, the independent accountant will use the same type of procedures as were applicable to the obligations which were transferred as of the closing date;

(f) The pre-funding period shall be described in the prospectus or private placement memorandum provided to investing plans; and

(g) The trustee of the trust (or any agent with which the trustee contracts to provide trust services) will be a substantial financial institution or trust company experienced in trust activities and familiar with its duties, responsibilities and liabilities as a fiduciary under the Act. The trustee, as the legal owner of the obligations in the trust, will enforce all the rights created in favor of certificateholders of such trust, including employee benefit plans subject to the Act.

B. Neither any underwriter, sponsor, trustee, servicer, insurer, nor any obligor, unless it or any of its affiliates has discretionary authority or renders investment advice with respect to the plan assets used by a plan to acquire certificates, shall be denied the relief provided under Part I, if the provision of subsection II.A.(6) above is not satisfied with respect to acquisition or holding by a plan of such certificates, provided that (1) such condition is disclosed in the prospectus or private placement memorandum; and (2) in the case of a private placement of certificates, the trustee obtains a representation from each initial purchaser which is a plan that it is in compliance with such condition, and obtains a covenant from each initial purchaser to the effect that, so long as such initial purchaser (or any transferee of such initial purchaser's certificates) is required to obtain from its transferee a representation regarding compliance with the Securities Act of 1933, any such transferees will be required to make a written representation regarding compliance with the condition set forth in subsection II.A.(6) above.

III. Definitions

For purposes of this exemption:

A. ''Certificate'' means:

(1) A certificate—

(a) That represents a beneficial ownership interest in the assets of a trust; and

(b) That entitles the holder to pass-through payments of principal, interest, and/or other payments made with respect to the assets of such trust; or

(2) A certificate denominated as a debt instrument—

(a) That represents an interest in a Real Estate Mortgage Investment Conduit (REMIC) or a Financial Asset Securitization Investment Trust (FASIT) within the meaning of section 860D(a) or section 860L, respectively, of the Code; and

(b) That is issued by, and is an obligation of, a trust;

with respect to certificates defined in (1) and (2) above for which Countrywide or any of its affiliates is either (i) the sole underwriter or the manager or co-manager of the underwriting syndicate, or (ii) a selling or placement agent.

For purposes of this exemption, references to ''certificates representing an interest in a trust'' include certificates denominated as debt which are issued by a trust.

B. ''Trust'' means an investment pool, the corpus of which is held in trust and consists solely of:

(1) (a) Secured consumer receivables that bear interest or are purchased at a discount (including, but not limited to, home equity loans and obligations secured by shares issued by a cooperative housing association); and/or

(b) Secured credit instruments that bear interest or are purchased at a discount in transactions by or between business entities (including, but not limited to, qualified equipment notes secured by leases, as defined in section III.T); and/or

(c) Obligations that bear interest or are purchased at a discount and which are secured by single-family residential, multi-family residential and commercial real property (including obligations secured by leasehold interests on commercial real property); and/or

(d) Obligations that bear interest or are purchased at a discount and which are secured by motor vehicles or equipment, or qualified motor vehicle leases (as defined in section III.U); and/or

(e) ''Guaranteed governmental mortgage pool certificates,'' as defined in 29 CFR 2510.3–101(i)(2); and/or

(f) Fractional undivided interests in any of the obligations described in clauses (a)–(e) of this section B.(1);

(2) Property which had secured any of the obligations described in subsection B.(1);

(3)(a) Undistributed cash or temporary investments made therewith maturing no later than the next date on which distributions are to be made to certificateholders; and/or

(b) Cash or investments made therewith which are credited to an account to provide payments to certificateholders pursuant to any yield supplement agreement or similar yield maintenance arrangement to supplement the interest rates otherwise payable on obligations described in subsection III.B.(1) held in the trust, provided that such arrangements do not involve swap agreements or other notional principal contracts; and/or

(c) Cash transferred to the trust on the closing date and permitted investments made therewith which:

(i) are credited to a pre-funding account established to purchase additional obligations with respect to which the conditions set forth in clauses (a)–(g) of subsection II.A.(7) are met and/or;

(ii) are credited to a capitalized interest account (as defined in section III.X.); and

(iii) are held in the trust for a period ending no later than the first distribution date to certificateholders occurring after the end of the pre-funding period.

For purposes of this clause (c) of subsection III.B.(3), the term ''permitted investments'' means investments which are either: (i) Direct obligations of, or obligations fully guaranteed as to timely payment of principal and interest by the United States, or any agency or instrumentality thereof, provided that such obligations are backed by the full faith and credit of the United States or (ii) have been rated (or the obligor has been rated) in one of the three highest generic rating categories by a rating agency; are described in the pooling and servicing agreement; and are permitted by the rating agency; and

(4) Rights of the trustee under the pooling and servicing agreement, and rights under any insurance policies, third-party guarantees, contracts of suretyship, yield supplement agreements described in clause (b) of subsection III.B.(3) and other credit support arrangements with respect to any obligations described in subsection III.B.(1).

Notwithstanding the foregoing, the term ''trust'' does not include any investment pool unless: (i) The investment pool consists only of assets of the type described in clauses (a) through (f) of subsection III.B.(1) which have been included in other investment pools, (ii) certificates evidencing interests in such other investment pools have been rated in one of the three highest generic rating categories by a Rating Agency for at least one year prior to the plan's acquisition of certificates pursuant to this exemption, and (iii) certificates evidencing interests in such other investment pools have been purchased by investors other than plans for at least one year prior to the plan's acquisition of certificates pursuant to this exemption.

C. ''Underwriter'' means:

(1) Countrywide;

(2) Any person directly or indirectly, through one or more intermediaries, controlling, controlled by or under common control with Countrywide; or

(3) Any member of an underwriting syndicate or selling group of which Countrywide or a person described in (2) is a manager or co-manager with respect to the certificates.

D. ''Sponsor'' means the entity that organizes a trust by depositing obligations therein in exchange for certificates.

E. ''Master Servicer'' means the entity that is a party to the pooling and servicing agreement relating to trust assets and is fully responsible for servicing, directly or through subservicers, the assets of the trust.

F. ''Subservicer'' means an entity which, under the supervision of and on behalf of the master servicer, services obligations contained in the trust, but is not a party to the pooling and servicing agreement.

G. ''Servicer'' means any entity which services obligations contained in the trust, including the master servicer and any subservicer.

H. ''Trustee'' means the trustee of the trust, and in the case of certificates which are denominated as debt instruments, also means the trustee of the indenture trust.

I. ''Insurer'' means the insurer or guarantor of, or provider of other credit support for, a trust. Notwithstanding the foregoing, a person is not an insurer solely because it holds securities representing an interest in a trust which are of a class subordinated to certificates representing an interest in the same trust.

J. ''Obligor'' means any person, other than the insurer, that is obligated to make payments with respect to any obligation or receivable included in the trust. Where a trust contains qualified motor vehicle leases or qualified equipment notes secured by leases, ''obligor'' shall also include any owner of property subject to any lease included in the trust, or subject to any lease securing an obligation included in the trust.

K. ''Excluded Plan'' means any plan with respect to which any member of the Restricted Group is a ''plan sponsor'' within the meaning of section 3(16)(B) of the Act.

L. ''Restricted Group'' with respect to a class of certificates means:

(1) Each underwriter;

(2) Each insurer;

(3) The sponsor;

(4) The trustee;

(5) Each servicer;

(6) Any obligor with respect to obligations or receivables included in the trust constituting more than 5 percent of the aggregate unamortized principal balance of the assets in the trust, determined on the date of the initial issuance of certificates by the trust; or

(7) any affiliate of a person described in (1)–(6) above.

M. ''Affiliate'' of another person includes:

(1) Any person directly or indirectly, through one or more intermediaries, controlling, controlled by, or under common control with such other person;

(2) Any officer, director, partner, employee, relative (as defined in section 3(15) of the Act), a brother, a sister, or a spouse of a brother or sister of such other person; and

(3) Any corporation or partnership of which such other person is an officer, director or partner.

N. ''Control'' means the power to exercise a controlling influence over the management or policies of a person other than an individual.

O. A person will be ''independent'' of another person only if:

(1) Such person is not an affiliate of that other person; and

(2) The other person, or an affiliate thereof, is not a fiduciary who has investment management authority or renders investment advice with respect to any assets of such person.

P. ''Sale'' includes the entrance into a forward delivery commitment (as defined in section Q below), provided:

(1) The terms of the forward delivery commitment (including any fee paid to the investing plan) are no less favorable to the plan than they would be in an arm's-length transaction with an unrelated party;

(2) The prospectus or private placement memorandum is provided to an investing plan prior to the time the plan enters into the forward delivery commitment; and

(3) At the time of the delivery, all conditions of this exemption applicable to sales are met.

Q. ''Forward delivery commitment'' means a contract for the purchase or

sale of one or more certificates to be delivered at an agreed future settlement date. The term includes both mandatory contracts (which contemplate obligatory delivery and acceptance of the certificates) and optional contracts (which give one party the right but not the obligation to deliver certificates to, or demand delivery of certificates from, the other party).

R. ''Reasonable compensation'' has the same meaning as that term is defined in 29 CFR 2550.408c–2.

S. ''Qualified Administrative Fee'' means a fee which meets the following criteria:

(1) The fee is triggered by an act or failure to act by the obligor other than the normal timely payment of amounts owing in respect of the obligations;

(2) The servicer may not charge the fee absent the act or failure to act referred to in (1);

(3) The ability to charge the fee, the circumstances in which the fee may be charged, and an explanation of how the fee is calculated are set forth in the pooling and servicing agreement; and

(4) the amount paid to investors in the trust will not be reduced by the amount of any such fee waived by the servicer.

T. ''Qualified Equipment Note Secured By A Lease'' means an equipment note:

(1) Which is secured by equipment which is leased;

(2) Which is secured by the obligation of the lessee to pay rent under the equipment lease; and

(3) With respect to which the trust's security interest in the equipment is at least as protective of the rights of the trust as would be the case if the equipment note were secured only by the equipment and not the lease.

U. ''Qualified Motor Vehicle Lease'' means a lease of a motor vehicle where:

(1) The trust owns or holds a security interest in the lease;

(2) The trust owns or holds a security interest in the leased motor vehicle; and

(3) The trust's security interest in the leased motor vehicle is at least as protective of the trust's rights as would be the case if the trust consisted of motor vehicle installment loan contracts.

V. ''Pooling and Servicing Agreement'' means the agreement or agreements among a sponsor, a servicer and the trustee establishing a trust. In the case of certificates which are denominated as debt instruments, ''Pooling and Servicing Agreement'' also includes the indenture entered into by the trustee of the trust issuing such certificates and the indenture trustee.

W. ''Rating Agency'' means Standard & Poor's Structured Rating Group, Moody's Investors Service, Inc., Duff & Phelps Credit Rating Co., Fitch IBCA, Inc., or their successors;

X. ''Capitalized Interest Account'' means a trust account: (i) Which is established to compensate certificateholders for shortfalls, if any, between investment earnings on the pre-funding account and the pass-through rate payable under the certificates; and (ii) which meets the requirements of clause (c) of subsection III.B.(3).

Y. ''Closing Date'' means the date the trust is formed, the certificates are first issued and the trust's assets (other than those additional obligations which are to be funded from the pre-funding account pursuant to subsection II.A.(7)) are transferred to the trust.

Z. ''Pre-Funding Account'' means a trust account: (i) Which is established to purchase additional obligations, which obligations meet the conditions set forth in clauses (a)–(g) of subsection II.A.(7); and (ii) which meets the requirements of clause (c) of subsection III.B.(3).

AA. ''Pre-Funding Limit'' means a percentage or ratio of the amount allocated to the pre-funding account, as compared to the total principal amount of the certificates being offered which is less than or equal to 25 percent.

BB. ''Pre-Funding Period'' means the period commencing on the closing date and ending no later than the earliest to occur of: (i) The date the amount on deposit in the pre-funding account is less than the minimum dollar amount specified in the pooling and servicing agreement; (ii) the date on which an event of default occurs under the pooling and servicing agreement; or (iii) the date which is the later of three months or 90 days after the closing date.

CC. ''Countrywide'' means Countrywide Securities Corporation and its affiliates.

The Department notes that this exemption is included within the meaning of the term ''Underwriter Exemption'' as it is defined in section V(h) of Prohibited Transaction Exemption 95–60 (60 FR 35925, July 12, 1995), the Class Exemption for Certain Transactions Involving Insurance Company General Accounts at (see 60 FR 35932).

For a more complete statement of the fact and representations supporting the Department's decision to grant this exemption, refer to the notice of proposed exemption published on September 19, 2000 at 65 FR 56720.

FOR FURTHER INFORMATION CONTACT: Gary Lefkowitz of the Department, telephone (202) 219–8881. (This is not a toll-free number.)

Journal Company, Inc. 401(k) Savings Plan (the Plan) Located in Trenton, New Jersey

[Prohibited Transaction Exemption 2000–56; Exemption Application No. D–10781]

Exemption

The restrictions of 406(a) and 406(b)(1), 406(b)(2), and 406(b)(3) of the Act and the sanctions resulting from the application of section 4975 of the Code, by reason of section 4975(c)(1)(A) through (F) of the Code, shall not apply to: (a) The receipt by certain affiliates and predecessors of Journal Register East, Inc. (JRE), by Bank of America NA. (the successor in interest to Boatmen's Trust Company) (the Bank), and by certain individuals alleged in a complaint to have been or to be fiduciaries of the Plan (collectively, the Defendants) of releases signed by participants in the Plan, in which such participants waive their rights to sue in connection with the acquisition and retention in such participants' accounts in the Plan of interests in certain guaranteed investment contracts (GICs) issued by Confederation Life Insurance Company (CLI); and (b) the payment by the corporate Defendants of a settlement amount to be allocated to the accounts of participants in the Plan in exchange for release from liability obtained from such participants; provided that the following conditions are satisfied:

(a) The payment of the settlement amount is a one-time cash transaction;

(b) Each participant whose account in the Plan has an interest in the GICs decides whether, in exchange for the settlement amount, to waive his or her right to sue in connection with the acquisition and retention in such participant's account in the Plan of interests in such GICs; or to opt out of such settlement and retain all such rights and causes of action;

(c) Pursuant to the terms of the settlement, the account of each participant in the Plan who waives his or her right to sue receives an amount of the settlement proceeds in proportion to the interest each such account has in the GICs;

(d) Pursuant to the terms of the settlement, the corporate Defendants are responsible for paying the attorneys' fees to the law firm representing the plaintiffs (the Plaintiffs);

(e) A portion of the fees that would have been due and payable to the Plaintiffs' attorneys will be withheld from the settlement proceeds by JRE, an employer of employees covered by the Plan, and paid to the Plaintiffs' in cash based on each Plaintiff's share of the amount of the settlement proceeds allocated to all of the Plaintiffs;

(f) Notwithstanding the waiver by any participant of his or her right to sue, the Plan does not release any claims, demands, and/or causes of action which it may have in connection with the acquisition and retention in participants' accounts in the Plan of interests in the GICs;

(g) No expenses are incurred by the Plan as a result of the settlement;

(h) The Plaintiffs' attorneys and each participant who signs the release and waives his or her right to sue will monitor the payment of the settlement proceeds by the corporate Defendants and the allocation of the proper amounts into such participants' accounts in the Plan, in order to ensure compliance with the terms of the settlement agreement; and

(i) All terms and conditions of the transaction are no less favorable than those obtainable at arm's length with unrelated third parties.

EFFECTIVE DATE: This exemption is effective upon the date that the Defendants enter into a settlement of the lawsuit with the Plaintiffs.

Written Comments

In the Notice of Proposed Exemption (the Notice), the Department of Labor (the Department) invited all interested persons to submit written comments and requests for a hearing on the proposed exemption. As set forth in the Notice, interested persons consisted of all participants and beneficiaries in the Plan who have an interest in the GICs. The deadline for submission of such comments was within forty-five (45) days of the date of the publication of the Notice in the **Federal Register** on September 7, 2000. All comments and requests for a hearing were due on October 23, 2000.

On September 25, 2000, the applicant informed the Department in writing that, with the exception of seven (7) former participants in the Plan, notification had been sent to all interested persons by first class mail to the last known address. In a letter dated September 29, 2000, the applicant notified the Department that, as of September 27, 2000, a copy of the Notice had been sent to all former participants in the Plan who had not received the earlier mailing. In order to allow all interested parties to have the full comment period after receiving the Notice, the Department required, and the applicants agreed to, an extension of the deadline when comments would be due on the proposed exemption. Accordingly, all comments and requests for a hearing were due on October 30, 2000.

During the comment period, the Department received no requests for a hearing. However, the Department received two (2) comment letters in which interested persons informed the Department of factual changes to the Summary of Facts and Representations (SFR) in the Notice. In this regard, in a letter, dated September 12, 2000, the attorney for Boatman's Trust Company informed the Department that, effective March 13, 1998, Boatman's Trust Company had merged with Bank of America NA (formerly known as NationsBank, NA). The attorney advised the Department that Bank of America NA at the time of the merger assumed all of the obligations of Boatman's Trust Company, including those obligations under the terms of the settlement agreement. The Department acknowledges the merger of Boatman's Trust Company with Bank of America NA. and has amended the operant language of this exemption to reflect such change.

In a letter dated October 30, 2000, the attorney for the Plaintiffs informed that Department that the correct name of the labor organization mentioned in the SFR on page 54304, column 3, lines 35–36 of the Notice is the Woonsocket Newspaper Guild CWA/TNG Local 31182, AFL–CIO. The Department acknowledges the correct name of the labor organization and has included such information in the record of the exemption application.

After giving full consideration to the entire record, including the written comments, the Department has decided to grant the exemption. In this regard, the comment letters submitted to the Department have been included as part of the public record of the exemption application. The complete application file, including all supplemental submissions received by the Department, is made available for public inspection in the Public Documents Room of the Pension Welfare Benefits Administration, Room N–5638, U.S. Department of Labor, 200 Constitution Avenue, NW., Washington, DC 20210.

For a more complete statement of the facts and representations supporting the Department's decision to grant this exemption refer to the Notice of Proposed Exemption published on September 7, 2000, at 65 FR 54303.

FOR FURTHER INFORMATION CONTACT: Ms. Angelena C. Le Blanc of the Department, telephone (202) 219–8883 (this is not a toll-free number).

Sun Life Assurance Company of Canada (Sun Life) Located in Toronto, Ontario, Canada

[Prohibited Transaction Exemption 2000–57; Exemption Application No. D–10814]

Exemption

Section I. Covered Transactions

The restrictions of section 406(a) of the Act and the sanctions resulting from the application of section 4975 of the Code, by reason of section 4975(c)(1)(A) through (D) of the Code, shall not apply, effective March 22, 2000, to the (1) receipt of common stock (Common Shares) issued by Sun Life Financial Services of Canada, Inc., the holding company for Sun Life; or (2) the receipt of cash (Cash) or policy credits (Policy Credits), by or on behalf of any eligible policyholder (the Eligible Policyholder) of Sun Life which is an employee benefit plan (the Plan), subject to applicable provisions of the Act and/or the Code, including any Eligible Policyholder which is a Plan established by Sun Life or an affiliate for their own employees (the Sun Life Plans), in exchange for such Eligible Policyholder's membership interest in Sun Life, in accordance with the terms of a plan of conversion (the Conversion Plan) adopted by Sun Life and implemented under the insurance laws of Canada and the State of Michigan.

This exemption is subject to the conditions set forth below in Section II.

Section II. General Conditions

(a) The Conversion Plan was implemented in accordance with procedural and substantive safeguards that were imposed under the insurance laws of Canada and the State of Michigan and was subject to review and/or approval in Canada by the Office of the Superintendent of Financial Institutions (OSFI) and the Minister of Finance (the Canadian Finance Minister) and, in the State of Michigan, by the Commissioner of Insurance (the Michigan Insurance Commissioner).

(b) OSFI, the Canadian Finance Minister and the Michigan Insurance Commissioner reviewed the terms of the options that were provided to Eligible Policyholders of Sun Life as part of their separate reviews of the Conversion Plan. In this regard,

(1) OFSI (i) authorized the release of the Conversion Plan and all information to be sent to Eligible Policyholders; (ii) oversaw each step of the conversion process (the Conversion); and (iii) made a final recommendation to the Canadian Finance Minister on the Conversion Plan.

(2) The Canadian Finance Minister, in his sole discretion, could consider such factors as whether: (i) the Conversion Plan was fair and equitable to Eligible Policyholders; (ii) whether the Conversion Plan was in the best interests of the financial system in Canada; and (iii) sufficient steps had been taken to inform Eligible Policyholders of the Conversion Plan and of the special meeting on the Conversion.

(3) The Michigan Insurance Commissioner made a determination that the Conversion Plan was (i) fair and equitable to all Eligible Policyholders and (ii) consistent with the requirements of Michigan law.

(4) Both the Canadian Finance Minister and the Michigan Insurance Commissioner concurred on the terms of the Conversion Plan.

(c) Each Eligible Policyholder had an opportunity to vote to approve the Conversion Plan after full written disclosure was given to the Eligible Policyholder by Sun Life.

(d) One or more independent fiduciaries of a Plan that was an Eligible Policyholder received Common Shares, Cash or Policy Credits pursuant to the terms of the Conversion Plan and neither Sun Life nor any of its affiliates exercised any discretion or provided ''investment advice,'' as that term is defined in 29 CFR 2510.3–21(c), with respect to such acquisition.

(e) After each Eligible Policyholder was allocated 75 Common Shares, additional consideration was allocated to an Eligible Policyholder who owned an eligible policy based on an actuarial formula that took into account such factors as the total cash value, the base premium and the duration of such eligible policy. The actuarial formula was reviewed by the Canadian Finance Minister and the Michigan Insurance Commissioner.

(f) With respect to a Sun Life Plan, where the consideration was in the form of Cash or Common Shares, an independent Plan fiduciary—

(1) Determined that the Conversion Plan was in the best interest of the Sun Life Plans and their participants and beneficiaries;

(2) Voted for the Conversion Plan on behalf of the Sun Life Plans;

(3) Received either Common Shares or Cash on behalf of a Sun Life Plan;

(4) Determined that the transactions did not violate the investment objectives and policies of the Sun Life Plans;

(5) Negotiated on behalf of the contributory Sun Life Plans and determined a reasonable allocation of proceeds between Sun Life and the participants in the Sun Life Plans; and

(6) Took (and will continue to take until the proposed exemption becomes final) all actions that were (or will be) necessary and appropriate to safeguard the interests of the Sun Life Plans.

(g) All Eligible Policyholders that were Plans participated in the transactions on the same basis within their class groupings as other Eligible Policyholders that were not Plans.

(h) No Eligible Policyholder paid any brokerage commissions or fees to Sun Life or its affiliates in connection with their receipt of Common Shares or with respect to the implementation of the initial public offering in which an Eligible Policyholder could elect to sell such Common Shares for cash.

(i) All of Sun Life's policyholder obligations will remain in force and will not be affected by the Conversion Plan.

Section III. Definitions

For purposes of this exemption:

(a) The term ''Sun Life'' means Sun Life Assurance Company of Canada and any affiliate of Sun Life as defined in paragraph (b) of this Section III.

(b) An ''affiliate'' of Sun Life includes—

(1) Any person directly or indirectly through one or more intermediaries, controlling, controlled by, or under common control with Sun Life; (For purposes of this paragraph, the term ''control'' means the power to exercise a controlling influence over the management or policies of a person other than an individual.) or

(2) Any officer, director or partner in such person.

(c) The term ''Eligible Policyholder'' means a policyholder who—

(i) On January 27, 1998 (the Eligibility Day) was the owner of a voting policy;

(ii) Was the holder of a voting policy issued by Sun Life, if the policy was applied for by that person on or before the Eligibility Day and the application was received by Sun Life within a period specified by Sun Life in the Conversion Plan;

(iii) Was the holder of a voting policy, issued to the holder by Sun Life, that lapsed before Sun Life's Eligibility Day and was reinstated during the period beginning on the Eligibility Day and ending 90 days before the day on which Sun Life's Special Meeting was held; or

(iv) Was named by Sun Life in its Conversion Plan as an Eligible Policyholder under subsection 4(4) of the Conversion Regulations.

(d) The term ''Policy Credit'' means—

(1) For an individual or joint ordinary life insurance policy, an increase in the paid-up dividend additional cash value or dividend accumulation value;

(2) For a policy that is in force as extended term life insurance pursuant to a nonforfeiture provision of a life insurance policy, an extension of the coverage expiry date;

(3) For a policy which is a deferred annuity certificate, an increase in the deferred annuity payment; and

(4) For a policy which is an individual accumulation annuity, an increase in the account value.

EFFECTIVE DATE: This exemption is effective as of March 22, 2000.

For a more complete statement of the facts and representations supporting the Department's decision to grant this exemption, refer to the notice of proposed exemption that was published on September 7, 2000 at 65 FR 54307.

FOR FURTHER INFORMATION CONTACT: Ms. Jan D. Broady of the Department, telephone (202) 219–8881. (This is not a toll-free number.)

General Information

The attention of interested persons is directed to the following:

(1) The fact that a transaction is the subject of an exemption under section 408(a) of the Act and/or section 4975(c)(2) of the Code does not relieve a fiduciary or other party in interest or disqualified person from certain other provisions to which the exemptions does not apply and the general fiduciary responsibility provisions of section 404 of the Act, which among other things require a fiduciary to discharge his duties respecting the plan solely in the interest of the participants and beneficiaries of the plan and in a prudent fashion in accordance with section 404(a)(1)(B) of the Act; nor does it affect the requirement of section 401(a) of the Code that the plan must operate for the exclusive benefit of the employees of the employer maintaining the plan and their beneficiaries;

(2) These exemptions are supplemental to and not in derogation of, any other provisions of the Act and/or the Code, including statutory or administrative exemptions and transactional rules. Furthermore, the fact that a transaction is subject to an administrative or statutory exemption is not dispositive of whether the transaction is in fact a prohibited transaction; and

(3) The availability of these exemptions is subject to the express condition that the material facts and representations contained in each application accurately describes all material terms of the transaction which is the subject of the exemption.

Signed at Washington, DC, this 6th day of November, 2000.

Ivan Strasfeld,

Director of Exemption Determinations, Pension and Welfare Benefits, Administration, U.S. Department of Labor.

[FR Doc. 00–28856 Filed 11–9–00; 8:45 am]

BILLING CODE 4510–29–P

NATIONAL AERONAUTICS AND SPACE ADMINISTRATION

Agency Report Forms Under OMB Review

AGENCY: National Aeronautics and Space Administration (NASA).

[Notice 00–135]

ACTION: Notice of Agency Report Forms Under OMB Review.

SUMMARY: The National Aeronautics and Space Administration, as part of its continuing effort to reduce paperwork and respondent burden, invites the general public and other Federal agencies to take this opportunity to comment on proposed and/or continuing information collections, as required by the Paperwork Reduction Act of 1995 (Public Law 104–13; 44 U.S.C. 3506(c)(2)(A)). This information is used to determine whether the requested license should be granted.

DATES: Written comments and recommendations on the proposal for the collection of information should be received within 60 days of this notice.

ADDRESSES: All comments should be addressed to Mr. Brian Dunbar, Code PM, National Aeronautics and Space Administration, Washington, DC 20546. All comments will become a matter of public record and will be summarized in NASA's request for OMB approval.

FOR FURTHER INFORMATION CONTACT: Ms. Carmela Simonson, Office of the Chief Information Officer, (202) 358–1223.

Reports

Title: Voluntary Response Survey of NASA Internet Customers

OMB Number: 2700–.

Type of review: New.

Need and Uses: NASA is seeking input from Internet users that they will use to redesign the NASA Home Page, the NASA-wide Search Engine and other Internet offerings so that the NASA Web is more customer-focused and provides users with the information they are seeking more quickly.

Affected Public: Individuals or households.

Number of Respondents: 100.

Responses Per Respondent: 4.

Annual Responses: 400.

Hours Per Request: 15 min.

Annual Burden Hours: 100.

Frequency of Report: quarterly.

Dr. David B. Nelson,

Deputy Chief Information Officer, Office of the Administrator.

[FR Doc. 00–28955 Filed 11–9–00; 8:45 am]

BILLING CODE 7510–01–P

NATIONAL CREDIT UNION ADMINISTRATION

Notice of Meetings

TIME AND DATE: 10 a.m., Thursday, November 16, 2000.

PLACE: Board Room, 7th Floor, Room 7047, 1775 Duke Street, Alexandria, VA 22314–3428.

STATUS: Open.

MATTERS TO BE CONSIDERED: 1. Appeals from Two (2) Federal Credit Unions of the Regional Directors' Denials of Conversion from a Multiple Common Bond to a Community Charter.

2. Advance Notice of Proposed Rulemaking: Part 704, NCUA's Rules and Regulations, Corporate Credit Unions.

3. Proposed Rule: Amendments to Part 721, NCUA's Rules and Regulations, Federal Credit Union Insurance and Group Purchasing Activities.

4. NCUA's 2001 Annual Performance Plan.

5. Proposed Information Systems and Technology Examination Program (ISTEP).

6. NCUA's 2001/2002 Operating Budget.

7. Proposed Operating Fee Scale.

RECESS: 11:15 a.m.

TIME AND DATE: 11:30 a.m., Thursday, November 16, 2000.

PLACE: Board Room, 7th Floor, Room 7047, 1775 Duke Street, Alexandria, VA 22314–3428.

STATUS: Closed.

MATTERS TO BE CONSIDERED: 1. Administrative Action under Part 704 of NCUA's Rules and Regulations. Closed pursuant to exemption (8).

2. One (1) Personnel Matter. Closed pursuant to exemptions (2) and (6).

FOR FURTHER INFORMATION CONTACT: Becky Baker, Secretary of the Board, Telephone 703–518–6304.

Becky Baker,

Secretary of the Board.

[FR Doc. 00–29105 Filed 11–8–00; 3:58 pm]

BILLING CODE 7535–01–M

NATIONAL FOUNDATION FOR THE ARTS AND HUMANITIES

Agency Information Collections Activities; Submission for OMB Review, Comment Request; Technology Survey for Libraries and Museums

AGENCY: Institute of Museum and Library Services.

ACTION: Notice of requests for new information collection approval.

SUMMARY: The Institute of Museum and Library Services announces the following information collection has been submitted to the Office of Management and Budget for review and approval in accordance with the Paperwork Reduction Act of 1995 (Pub. L. 104–13, 44 U.S.C. Chapter 35). Currently, the Institute of Museum and Library Services is soliciting comment concerning extending collection entitled, Technology Survey for Libraries and Museums. A copy of this proposed form, with applicable supporting documentation, may be obtained by calling the Institute of Museum and Library Services, Director of Public and Legislative Affairs, Mamie Bittner at (202) 606–8339. Individuals who use a telecommunications device for the deaf (TTY/TDD) may call (202) 606–8636.

DATES: Comments must be received by December 13, 2000. The OMB is particularly interested in comments which:

- Evaluate whether the proposed collection of information is necessary for the proper performance of the functions of the agency, including whether the information will have practical utility;
- Evaluate the accuracy of the agency's estimate of the burden of the proposed collection of information, including the validity of the methodology and assumptions used;
- Enhance the quality, utility, and clarity of the information to be collected; and
- Minimize the burden of the collection of information on those who are to respond, including through the use of appropriate automated, electronic, mechanical, or other technological collection techniques or other forms of information technology, *e.g.*, permitting electronic submission of responses.

ADDRESSES: Send comments to: Mamie Bittner, Director of Legislative and Public Affairs, Institute of Museum and Library Services, 1100 Pennsylvania Ave., NW., Room 510, Washington, DC 20506.

SUPPLEMENTARY INFORMATION:

I. Background

Public Law 104–208 enacted on September 30, 1996 contains the former Museum Services Act and the Library Services and Technology Act, a reauthorization Public Law 104–208 authorizes the Director of the Institute of Museum and Library Services to make grants to improve museum and library service throughout the United States.

Agency: Institute of Museum and Library Services.

Title: Technology Survey for Libraries and Museums.

OMB Number: none.

Agency Number: 3137.

Frequency: One-time.

Affected Public: State Library Administrative Agencies, museums, libraries.

Number of Respondents: 3209.

Estimated Time Per Respondent: 45 minutes.

Total Burden Hours: 1605.

Total Annualized capital/startup costs: 0.

Total Annual Costs: $50,686.00.

CONTACT: Comments should be sent to Office of Information and Regulatory Affairs, Attn.: OMB Desk Officer for Education, Office of Management and Budget, Room 10235, Washington, DC 20503 (202) 395–7316.

Mamie Bittner,

Director Public and Legislative Affairs.

[FR Doc. 00–28902 Filed 11–9–00; 8:45 am]

BILLING CODE 7036–01–M

NATIONAL FOUNDATION FOR THE ARTS AND HUMANITIES

Agency Information Collections Activities; Submission for OMB Review, Comment Request; Generic Clearance for Grant Applications, Guidelines and Reporting Forms

AGENCY: Institute of Museum and Library Services.

ACTION: Notice of Requests for Extension of Information Collection Approvals

SUMMARY: The Institute of Museum and Library Services announces the following information collection has been submitted to the Office of Management and Budget for review and approval in accordance with the Paperwork Reduction Act of 1995 (Pub. L. 104–13, 44 U.S.C. Chapter 35). Currently, the Institute of Museum and Library Services is soliciting comment concerning extending collection entitled, Generic Clearance for Grant Applications, Guidelines and Reporting forms. A copy of this proposed form, with applicable supporting documentation, may be obtained by calling the Institute of Museum and Library Services, Director of Public and Legislative Affairs, Mamie Bittner at (202) 606–8339. Individuals who use a telecommunications device for the deaf (TTY/TDD) may call (202) 606–8636.

DATES: Comments must be received by December 13, 2000. The OMB is particularly interested in comments which:

- Evaluate whether the proposed collection of information is necessary for the proper performance of the functions of the agency, including whether the information will have practical utility;
- Evaluate the accuracy of the agency's estimate of the burden of the proposed collection of information, including the validity of the methodology and assumptions used;
- Enhance the quality, utility, and clarity of the information to be collected; and
- Minimize the burden of the collection of information on those who are to respond, including through the use of appropriate automated, electronic, mechanical, or other technological collection techniques or other forms of information technology, e.g., permitting electronic submission of responses.

ADDRESSES: Send comments to: Mamie Bittner, Director of Legislative and Public Affairs, Institute of Museum and Library Services, 1100 Pennsylvania Ave., NW, Room 510, Washington, DC 20506.

SUPPLEMENTARY INFORMATION:

I. Background

Public Law 104–208 enacted on September 30, 1996 contains the former Museum Services Act and the Library Services and Technology Act, a reauthorization. Public Law 104–208 authorizes the Director of the Institute of Museum and Library Services to make grants to improve museum and library service throughout the United States.

Agency: Institute of Museum and Library Services.

Title: Application Guidelines, Interim and Final Performance Reports.

OMB Number: 3137–0029.

Agency Number: 3137.

Frequency: Annually.

Affected Public: State Library Administrative Agencies, museums, libraries.

Number of Respondents: 2,664.

Estimated Time Per Respondent: 1–40 hours (see chart).

Total Burden Hours: 36,432.

Total Annualized capital/startup costs: 0.

Total Annual Costs: 0.

CONTACT: Comments should be sent to Office of Information and Regulatory Affairs, Attn.: OMB Desk Officer for Education, Office of Management and Budget, Room 10235, Washington, DC 20503 (202) 395–7316.

Mamie Bittner,

Director Public and Legislative Affairs.

Title of publication	Burden hours	Number of respondents
Museum Assessment Program Grant and Application Guidelines	4	180
Conservation Assessment Program Grant and Application Guidelines	4	208
Conservation Project (CP) Grant Application and guidelines	9	210
CP Interim Performance Report	1	68
CP Final Performance Report	1	68
General Operation Support Grant Application and Guidelines	18	823
GOS final Performance Report	1	202
National Leadership Grant Application and Guidelines for Museums and Libraries	40	277
National Leadership Grant for Museums and Libraries Interim Report	1	50
National Leadership Grant for Museums and Libraries Final Report	2	50
State Grants Annual Report	18	56
Native American Library Services Application and guidelines	14	400

[FR Doc. 00–28903 Filed 11–9–00; 8:45 am]

BILLING CODE 7036–01–M

NATIONAL TRANSPORTATION SAFETY BOARD

Sunshine Act Meeting

"FEDERAL REGISTER" CITATION OF PREVIOUS ANNOUNCEMENT: Vol. 65, No. 217/Wednesday, November 8, 2000.

PREVIOUSLY ANNOUNCED TIME AND DATE: 9:30 a.m., Tuesday, November 14, 2000.

CHANGE IN MEETING: A majority of the Board Members determined by recorded vote that the business of the Board required changing the Board Meeting time from Tuesday, November 14, 2000 at 9:30 am to Tuesday, November 14, 2000 at 10:00 am at this time and that no earlier announcement was possible.

FOR FURTHER INFORMATION CONTACT: Rhonda Underwood, (202) 314–6065.

Dated: November 8, 2000.

Rhonda Underwood,

Federal Register Liaison Officer.

[FR Doc. 00–29035 Filed 11–8–00; 11:51 am]

BILLING CODE 7533–01–M

PRESIDIO TRUST

The Presidio of San Francisco, California; Extension of the Public Comment Period for the Presidio Trust Implementation Plan Supplemental Environmental Impact Statement

AGENCY: The Presidio Trust.

ACTION: The Presidio Trust (Trust) is extending the scoping period from December 8, 2000 to January 15, 2001 to ensure adequate time for the public to review and comment on the proposed alternatives to be evaluated in the Presidio Trust Implementation Plan (PTIP) Environmental Impact Statement (EIS). The PTIP EIS is a supplement to the 1994 Final General Management Plan Amendment (GMPA) EIS for The Presidio of San Francisco (Presidio).

SUPPLEMENTARY INFORMATION: On June 30, 2000 the Trust published a notice announcing its intention to prepare a Supplemental EIS for PTIP and to hold two public scoping meetings to determine the scope of impact topics and alternatives to be addressed in the Supplemental EIS (65 FR 40707–08). On October 11, 2000 the Trust published a notice amending its June 30, 2000 notice to add a third public scoping meeting on November 15, 2000, to make factual corrections and to extend the previously announced scoping period from November 15, 2000 to December 8, 2000 (65 FR 60477–60478). The November 15, 2000 workshop will present conceptual alternatives to be addressed in the EIS and visions for the Presidio's future. The extension of the scoping period from December 8, 2000 to January 15, 2000 is being provided in response to several requests from commenting organizations and members of the public.

Public Meeting: The Trust will solicit public comments on the conceptual alternatives proposed for analysis in the EIS at the third of three public scoping workshops on Wednesday, November 15, 2000 from 6 to 9 p.m. at the Log Cabin (Building 1299), Fort Scott at the Presidio.

ADDRESSES: Written comments concerning the content of the plan and the scope of the Supplemental EIS should be sent by January 15, 2000 to John Pelka, NEPA Compliance Coordinator, the Presidio Trust, 34 Graham Street, P.O. Box 29052, San Francisco, CA 94129–0052. Fax: 415/561–5315. E-mail: ptip@presidiotrust.gov.

FOR FURTHER INFORMATION: Contact John Pelka, NEPA Compliance Coordinator, the Presidio Trust, 34 Graham Street, P.O. Box 29052, San Francisco, CA 94129–0052. Telephone: 415–561–5300.

Dated: November 6, 2000.

Karen A. Cook,

General Counsel.

[FR Doc. 00–28901 Filed 11–9–00; 8:45 am]

BILLING CODE 4310–4R–U

SECURITIES AND EXCHANGE COMMISSION

[Release No. 34–43506; File No. SR–BSE–00–12]

Self-Regulatory Organizations; Notice of Filing of Proposed Rule Change by the Boston Stock Exchange, Inc. Relating to the Time Period for Filing Claims Against Specialists

November 1, 2000.

Pursuant to section 19(b)(1) of the Securities Exchange Act of 1934 (''Act''),[1] and Rule 19b–4 thereunder,[2] notice is hereby given that on September 21, 2000, the Boston Stock Exchange, Inc. (''Exchange'') filed with the Securities and Exchange Commission (''Commission'') the proposed rule change as described in Items I, II and III below, which items have been prepared by the Exchange. On October 3, 2000, the Exchange filed Amendment No. 1 to the proposed rule change.[3] The Commission is publishing this notice to solicit comments on the proposed rule change from interested persons.

I. Self-Regulatory Organization's Statement of the Terms of Substance of the Proposed Rule Change

The Exchange seeks to amend its Rule regarding claims against specialists to bring the time period for filing claims into parity with T+3 settlement. Below is the text of the proposed rule change. Proposed new language is *italicized* and proposed deletions are in [brackets].

* * * * *

Chapter XV; Claims and Reports Against Specialists

Sec. 14. All claims and reports against specialists must be made in a timely fashion as indicated below:

(a) All claims which involve erroneous comparisons must be made within [5] *3* business days of the original trade date.

(b) All claims relative to the omission of a report which was properly due must be made within [5] *3* business days of the date the order should have been executed.

(c) All claims relative to the lack of comparison of a reported transaction must be made within 3 business days of the original trade date.

* * * * *

II. Self-Regulatory Organization's Statement of the Purpose of, and Statutory Basis for, the Proposed Rule Change

In its filing with the Commission, the Exchange included statements concerning the purpose of and basis for the proposed rule change and discussed any comments it received on the proposed rule change. The text of these statements may be examined at the places specified in Item IV below. The self-regulatory organization has prepared summaries, set forth in Sections A, B, and C below, of the most significant aspects of such statements.

A. Self-Regulatory Organization's Statement of the Purpose of, and Statutory Basis for, the Proposed Rule Change

1. Purpose

The Exchange proposes to amend Chapter XV, Section 14, *Claims and Reports against Specialists,* to bring the rule into parity with T+3 settlement. Currently, the rule has a five-day period within which claims can be brought against a specialist. At the time the rule was originally drafted, the settlement period for trades was five days, and the period within which claims could be filed corresponded to this period. With the reduction of the trade settlement period to three days, the Exchange is seeking an equivalent three-day time period for the filing of claims against specialists.

2. Statutory Basis

The statutory basis for the proposed rule change is section 6(b)(5) of the Act,[4] in that it is designed to promote just and equitable principles of trade, to foster cooperation and coordination with persons engaged in regulating securities

[1] 15 U.S.C. 78s(b)(1).

[2] 17 CFR 240.19b–4.

[3] In Amendment No. 1, the Exchange made certain technical changes relating, *inter alia,* to the format of the filing, the date of effectiveness of the proposed rule change, and the authorization procedures of the Exchange. *See* Amendment No. 1, filed October 3, 2000.

[4] 15 U.S.C. 78f(b)(5).

transactions, to remove impediments to perfect the mechanism of a free and open market and a national market system and, in general, to protect investors and the public interest.

B. Self-Regulatory Organization's Statement on Burden on Competition

The Exchange does not believe that the proposed rule change will impose any burden on competition that is not necessary or appropriate in furtherance of the purposes of the Act.

C. Self-Regulatory Organization's Statement on Comments on the Proposed Rule Change Received From Members, Participants or Others

No written comments were either solicited or received.

III. Date of Effectiveness of the Proposed Rule Change and Timing for Commission Action

Within 35 days of the date of publication of this notice in the **Federal Register** or within such longer period (i) as the Commission may designate up to 90 days of such date if it finds such longer period to be appropriate and publishes its reasons for so finding or (ii) as to which the self-regulatory organization consents, the Commission will:

(A) By order approve such proposed rule change, or

(B) Institute proceedings to determine whether the proposed rule change should be disapproved.

IV. Solicitation of Comments

Interested persons are invited to submit written data, views and arguments concerning the foregoing, including whether the proposed rule change is consistent with the Act. Persons making written submissions should file six copies thereof with the Secretary, Securities and Exchange Commission, 450 Fifth Street, NW, Washington, DC 20549–0609. Copies of the submission, all subsequent amendments, all written statements with respect to the proposed rule change that are filed with the Commission, and all written communications relating to the proposed rule change between the Commission and any person, other than those that may be withheld from the public in accordance with the provisions of 5 U.S.C. 552, will be available for inspection and copying at the Commission's Public Reference Room. Copies of such filing will also be available for inspection and copying at the principal office of the Exchange. All submissions should refer to File No. SR–BSE–00–12 and should be submitted by December 4, 2000.

For the Commission, by the Division of Market Regulation, pursuant to delegated authority.[5]

Margaret H. McFarland,

Deputy Secretary.

[FR Doc. 00–28944 Filed 11–9–00; 8:45 am]

BILLING CODE 8010–01–M

SECURITIES AND EXCHANGE COMMISSION

[Release No. 34–43508; File No. SR–ISE–00–09]

Self Regulatory Organizations; Notice of Filing of Proposed Rule Change by the International Securities Exchange LLC Relating to Chinese Wall Procedures

November 2, 2000.

Pursuant to section 19(b)(1) of the Securities Exchange Act of 1934 (''Act''),[1] and Rule 19b-4 thereunder,[2] notice is hereby given that on September 12, 2000, the International Securities Exchange LLC (''ISE'' or ''Exchange'') filed with the Securities and Exchange Commission (''Commission'') the proposed rule change as described in Items I, II, and III below, which items have been prepared by the Exchange. The Commission is publishing this notice to solicit comments on the proposed rule change from interested persons.

I. Self-Regulatory Organization's Statement of the Terms of Substance of the Proposed Rule Change

The Exchange is proposing to amend ISE Rule 810 relating to Chinese Wall procedures. Proposed new language is *italicized*.

810. Limitations on Dealings

(a) General Rule. A market maker on the Exchange may engage in Other Business Activities, or it may be affiliated with a broker-dealer that engages in Other Business Activities, only if there is a Chinese Wall between the market making activities and the Other Business Activities. ''Other Business Activities'' means:[3]

(1) conducting an investment or banking or public securities business;

(2) making markets in the stocks underlying the options in which it makes markets; or

(3) functioning as an Electronic Access Member.

(b)–(e) No changes.

(b) Exception to Chinese Wall Requirement. A market maker shall be exempt from paragraph (a)(3) of this Rule to the extent the market maker complies with the following conditions:

(1) such member functions as an Electronic Access Member solely in options classes (i) contained in Groups to which the member is not appointed as a market maker pursuant to Rule 802 or (ii) in which the member is prohibited from acting as a market maker pursuant to regulatory requirements; and

(2) the member enters orders as an Electronic Access Member only for (i) the proprietary account of the member or (ii) the account of entities that are affiliated with the member.

II. Self-Regulatory Organization's Statement of the Purpose of, and Statutory Basis for, the Proposed Rule Change

In its filing with the Commission, the Exchange included statements concerning the purpose of, and basis for, the proposed rule change and discussed any comments it received on the proposed rule change. The text of these statements may be examined at the places specified in Item IV below. The Exchange has prepared summaries, set forth in Sections A, B, and C below, of the most significant aspects of such statements.

A. Self-Regulatory Organization's Statement of the Purpose of, and Statutory Basis for, the Proposed Rule Change

1. Purpose

ISE Rule 810 requires that ISE market makers erect a ''Chinese Wall'' between their market making activity and certain other business activities, including their trading as an Electronic Access Member (''EAM''). The wall is intended to prevent any real-time communication between the various business lines. The ISE believes that this is especially critical to the integrity of the ISE market with respect to EAM activities. Without the wall, a trader entering an order as an EAM could potentially inform the person making markets about the pending order. The market maker could then, based on this knowledge, move its quotation either (i) to ''intercept'' an order against which the firm wants to trade, or (ii) to avoid an order against which it does not want to trade. The Exchange adopted ISE Rule 810 because such behavior would be inconsistent with the agency auction market structure of the Exchange.

The ISE believes that although ISE Rule 810 generally has worked well, it broad restrictions limit the ability of

---

[5] 17 CFR 200.30–3(a)(12).

[1] 15 U.S.C. 78s(b)(1).

[2] 17 CFR 240.19b-4.

[3] The ISE corrected a typographical error that appeared in the proposed rule language. Telephone conversation between Michael J. Simon, Senior Vice President and General Counsel, ISE, Katherine A. England, Assistant Director, and Susie Cho. Attorney, Division of Market Regulation, Commission, October 31, 2000.

certain market makers to send proprietary order flow to the ISE in options outside of their assigned groups of options (''bins''.[4] In particular, many market makers do not have the facilities to establish a ''Chinese Wall'', which requires physical separation of functions (generally on separate floors), between their proprietary traders and individuals performing ISE market making activities. The ISE notes that several of its market maker members do a significant amount of proprietary trading.

The ISE represents that the purpose of the proposed rule change is to ease ISE Rule 810 to allow members to conduct proprietary trading in the same physical space as their market making activities, but only: (i) in options that are not within their market making assignments or (ii) in options which, pursuant to regulatory requirements, the member is prohibited from making markets. This latter provision is intended to apply to market makers that are specialists in the underlying stock on the New York Stock Exchange, Inc. (''NYSE''), whose rules limit the options trading of specialists and affiliated firms to ''hedging activities,'' thus prohibiting them from making markets in options.[5] In addition, the proposed rule change would permit only proprietary trading without the Chinese Wall and would not permit the market maker to enter agency orders (except with respect to proprietary orders for its affiliates) without complying with the full restrictions of ISE Rule 810.

In these narrow circumstances, the Exchange does not believe that there is the potential for the type of harm against which ISE Rule 810 is intended to protect. Since the member will not be making markets in the stocks in which they are engaging in proprietary trading, there is no opportunity for using the dual roles either to manipulate the market or take unfair advantage of market information. Thus, the ISE believes that relaxing this rule will help attract proprietary order flow to the ISE, without any adverse regulatory implications.

[4] The ISE assigns market makers to bins of options. There are 10 bins, and each bin has one Primary Market Maker (''PMM'') and up to 10 Competitive Market Makers (CMM) assigned to each.

[5] *See* NYSE Rule 105. This applies solely to CMMs. Because CMMs are required to provide continuous quotes in only 60 percent of the options in a bin, it is possible that a CMM could be assigned a bin in which it is not permitted to make markets in certain options classes. Such a CMM simply would not quote in these ''restricted'' options. PMMs must provide continuous quotes in all options in a bin and thus were bit assigned bins where these regulatory restrictions apply.

2. Statutory Basis

The Exchange believes that the proposed rule change is consistent with Section 6(b) of the Act[6] in general, and furthers the objectives of Section 6(b)(5)[7] in particular, in that it is designed to prevent fraudulent and manipulative acts and practices, to promote just and equitable principles of trade, to remove impediments to and perfect the mechanism for a free and open market and a national market system, and, in general, to protect investors and the public interest.

B. Self-Regulatory Organization's Statement on Burden on Competition

The Exchange does not believe that the proposed rule change will impose any burden on competition that is not necessary or appropriate in furtherance of the purposes of the Act.

C. Self-Regulatory Organization's Statement on Comments on the Proposed Rule Change Received From Members, Participants, or Others

The Exchange did not solicit or receive written comments on the proposed rule change.

III. Date of Effectiveness of the Proposed Rule Change and Timing for Commission Action

Within 35 days of the date of publication of this notice in the **Federal Register** or within such long period (i) as the Commission may designate up to 90 days of such date if it finds such longer period to be appropriate and publishes its reasons for so finding or (ii) as to which the Exchange consents, the Commission will:

(A) by order approve such proposed rule change, or

(B) institute proceedings to determine whether the proposed rule change should be disapproved.

IV. Solicitation of Comments

Interested persons are invited to submit written data, views, and arguments concerning the foregoing, including whether the proposed rule change, as amended, is consistent with the Act. Persons making written submissions should file six copies thereof with the Secretary, Securities and Exchange Commission, 450 Fifth Street, NW., Washington, DC 20549–0609. Copies of the submission, all subsequent amendments, all written statements with respect to the proposed rule change that are filed with the Commission, and all written communications relating to the proposed rule change between the Commission and any person, other than those that may be withheld from the public in accordance with the provisions of 5 U.S.C. 552, will be available for inspection and copying at the Commission's Public Reference Room. Copies of such filing will also be available for inspection and copying at the principal office of the Exchange. All submissions should refer to File No. SR–ISE–00–09 and should be submitted by December 4, 2000.

For the Commission, by the Division of Market Regulation, pursuant to delegated authority.[8]

Margaret H. McFarland,

Deputy Secretary.

[FR Doc. 00–28945 Filed 11–9–00; 8:45 am]

BILLING CODE 8010–01–M

[6] 15 U.S.C. 78f(b).

[7] 15 U.S.C. 78f(b)(5).

[8] 17 CFR 200.30–3(a)(12).

SECURITIES AND EXCHANGE COMMISSION

[Release No. 34–43509; File No. SR–PCX–00–12]

Self-Regulatory Organizations; Order Approving Proposed Rule Change by the Pacific Exchange, Inc. Relating to Disciplinary Jurisdiction of the Ethics and Business Conduct Committee

November 2, 2000.

I. Introduction

On March 26, 2000, the Pacific Exchange, Inc. (''PCX'' or ''Exchange'') submitted to the Securities and Exchange Commission (''Commission'' or ''SEC'') pursuant to Section 19(b)(1) of Securities Exchange Act 1934 (''Act'')[1] Rule 19b–4 thereunder,[2] a proposed rule change relating to the disciplinary jurisdiction of the Ethics and Business Conduct Committee (''EBCC''). On September 12, 2000, the PCX filed Amendment No. 1 to the proposed rule change.[3]

The proposed rule change, including Amendment No. 1, was published for comment in the **Federal Register** on September 27, 2000.[4] No comments were received on the proposal. This order approves the proposal.

II. Description of Proposal

In its proposed rule change, the Exchange seeks to broaden the

[1] 15 U.S.C. 78s(b)(1).

[2] 17 CFR 240.19b–4.

[3] *See* Letter from Cindy L. Sink, Senior Attorney, Regulatory Policy, PCX, to Jennifer L. Colihan, Attorney, Division of Market Regulation, Commission, dated September 11, 2000 (''Amendment No. 1'').

[4] *See* Securities Exchange Act Release No. 43312 (September 20, 2000), 65 FR 58139.

jurisdiction of the EBCC to include the enforcement of rules and regulations relating to trading, order, decorum, health, safety, and welfare on the trading floors. Currently, Article IV, Section 9(b) of the PCX Constitution, states that ''[t]he jurisdiction of [the EBCC] shall not extend to the enforcement of rules and regulations of the Floor Trading Committees relating to trading, order, decorum, health, safety, and welfare on the trading floors, or to hearings held by and sanctions imposed by such committees relating to such matters.'' Currently, the rules and regulations governing trading, order, decorum, health, safety, and welfare are within the exclusive jurisdiction of the Floor Trading Committees (''FTCs''). The Exchange proposes to delete the above-quoted section from the PCX Constitution, and grant the EBCC and FTCs concurrent jurisdiction over the enforcement of these rules and regulations.

Under the proposal, the EBCC will be the primary disciplinary committee at the Exchange and the FTCs will retain jurisdiction to hear certain disciplinary matters, if necessary. An FTC rather than the EBCC may hear a case if it involves technical issues. For example, an FTC may act as the disciplinary committee if a ''Marking the Close'' trading violation occurs. That is, an incident that involves a market maker changing his quotes at the close to not accurately reflect the market in order to improve the market maker's position. In such a case, the Exchange believes having the expertise of Floor Officials would be appropriate.

III. Discussion

The Commission finds that the proposed rule change is consistent with Section 6(b) [5] of the Act, in general, and furthers the objectives of Section 6(b)(6),[6] in particular, in that it is designed to assure that Exchange members and persons associated with Exchange members are appropriately disciplined for violations of the Act, the rules and regulations thereunder, and the rules of the Exchange.

The Commission believes that it is appropriate for the EBCC to have jurisdiction over disciplinary matters arising from the floor because it is less likely that the members of the EBCC will have personal knowledge of relevant incidents or a Floor Official ruling relating to the incident. The Commission believes that this will assist in creating a more objective disciplinary process at the PCX. Further, the proposed rule change will centralize disciplinary actions in one committee at the Exchange. The Commission believes that having one primary disciplinary committee responsible for hearing complaints will better assure consistency in the decisions rendered.

However, the Commission also believes that it is appropriate for the Exchange to allow the FTC to retain jurisdiction to hear those disciplinary matters that require specialized knowledge of the trading rules. The Commission understands many of the trading rules involve complex issues which require a high level of expertise to fully comprehend, and evaluate in a meaningful way.

The Commission believes that the Exchange's proposal to grant the EBCC and FTCs concurrent jurisdiction over disciplinary proceedings relating to trading, order, decorum, health, safety, and welfare on the trading floors, with the EBCC being the primary committee responsible, will result in consistent, independent decision-making. Moreover, the proposal will also ensure that matters involving complex and technical issues are handled by committees appropriately skilled to understand them and render fair decisions.

IV. Conclusion

For all of the aforementioned reasons, the Commission finds that the proposed rule change is consistent with the requirements of the Act and the rules and regulations thereunder applicable to a national securities exchange.[7]

It is Therefore Ordered, pursuant to Section 19(b)(2) of the Act,[8] that the proposed rule change (SR–PCX–00–12) is approved.

For the Commission, by the Division of Market Regulation, pursuant to delegated authority.[9]

Margaret H. McFarland,

Deputy Secretary.

[FR Doc. 00–28946 Filed 11–9–00; 8:45 am]

BILLING CODE 8010–01–M

[5] 15 U.S.C. 78f(b).

[6] 15 U.S.C. 78f(b)(6).

[7] In approving this rule change, the Commission has considered the proposal's impact on efficiency, competition, and capital formation, consistent with Section 3(f) of the Act. 15 U.S.C. 78c(f).

[8] 15 U.S.C. 78s(b)(2).

[9] 17 CFR 200.30–3(a)(12).

SECURITIES AND EXCHANGE COMMISSION

[Release No. 34–43510; File No. SR–PCX–00–41]

Self-Regulatory Organizations; Notice of Filing and Immediate Effectiveness of Proposed Rule Change by the Pacific Exchange, Inc. Relating to Changes to Schedule of Rates and Charges

November 3, 2000.

Pursuant to section 19(b)(1) of the Securities Exchange Act of 1934 (''Act'') [1] and Rule 19b–4 thereunder,[2] notice is hereby given that on October 16, 2000, the Pacific Exchange, Inc. (''PCX'' or ''Exchange'') filed with the Securities and Exchange Commission (''Commission'' or ''SEC'') the proposed rule change as described in Items I, II and III below, which Items have been prepared by the Exchange. The Exchange has designated this proposal as one establishing or changing a due, fee or other charge imposed by the Exchange under section 19(b0(3)(A)(ii) of the Act,[3] which renders the proposal effective upon filing with the Commission. The Commission is publishing this notice to solicit comments on the proposed rule change from interested person.

I. Self-Regulatory Organization's Statement of the Terms of Substance of the Proposed Rule Change

PCX is proposing to amend its schedule of rates and charges in order to eliminate credits for book executions, to increase registered representative options principal [4] fees, and to establish examination, registration and annual fees for off-floor trading firms and their traders. The text of the proposed change to the PCX fee schedule is available at the Exchange and at the Commission.

II. Self-Regulatory Organization's Statement of the Purpose of, and Statutory Basis for, the Proposed Rule Change

In its filing with the Commission, the Exchange included statements concerning the purpose of and basis for the proposed rule change and discussed any comments it received on the proposed rule change. The text of these statements may be examined at the

[1] 15 U.S.C. 78s(b)(1).

[2] 17 CFR 240.19b–4.

[3] 15 U.S.C. 78s(b)(3)(A)(ii).

[4] Telephone conversation between Hassan Abedi, Attorney, Regulatory Policy, PCX, and Terri Evans, Special Counsel, Division of Market Regulation, SEC, on November 1, 2000 (clarifying that the increased fee also applies to registered options principals).

places specified in Item IV below. The Exchange has prepared summaries, set forth in Sections A, B and C below, of the most significant aspects of such statements.

A. Self-Regulatory Organization's Statement of the Purpose of, and Statutory Basis for, the Proposed Rule Change

1. Purpose

Currently, the PCX Schedule of Rates and Charges credits order flow providers $.10 per contract on all book executions, which can be used to offset other PCX charges. In addition, the PCX charges an annual fee of $25 to all registered representatives and registered options principals for maintenance, new applications, or transfer of registration status. This fee supports the costs related to regulatory oversight and enforcement within the equities and options communities. Finally, the PCX does not charge a Designated Examining Authority (''DEA'') fee for its off-floor traders.

The Exchange now proposes to modify its Schedule of Rates and Charges. First, the Exchange proposes to eliminate the $.10 credit provided to order flow providers. In its original filing with the Commission the Exchange stated that this credit was needed in order to attract order flow and enable it to remain competitive.[5] Based upon its experience with this credit, the PCX believes that providing a credit for book activity does not create a meaningful incentive for attracting order flow.

Second, the Exchange proposes to increase its registered representative and registered options principal fee by $10 to $35 for annual maintenance, new applications, and transfers. The Exchange believes that this addition is warranted due to increased costs related to regulatory oversight and enforcement.

Finally, the Exchange proposes to add DEA fees for off-floor trading firms and its traders. Currently the PCX is the DEA for 162 firms. Of these 162 firms, 15 conduct extensive off-floor trading businesses. In the past, the PCX has outsourced the examinations of these 15 firms. The PCX intends to conduct these examinations in the future. The Exchange believes that, based upon its business model, the number of off-floor trading firms for which it will serve as DEA will increase substantially in the near future. Therefore, the Exchange is seeking to establish DEA fees that will allow for recovery of costs associated with these types of examinations. The Exchange proposes to require all current and future off-floor traders to pay an initial registration fee of $75 per trader and an annual fee thereafter of $250 per trader. The Exchange is also proposing to charge a $2,000 per month Examination Fee to be paid by member organizations for which the Exchange is the DEA. An Exemption from these fees will be granted to any member operating from the PCX trading floor that has demonstrated that at least 25% of its income, as reflected on the most recently submitted FOCUS Report, was derived from on-floor activities. These fees will help to offset costs associated with providing examination services to off-floor trading firms. These include costs related to advising firms on financial reporting requirements and compliance with PCX and SEC rules. There are also extensive travel costs and initial set-up costs related to such off-floor firms. These fees are consistent with the fee structures established by other Exchange.[6]

2. Statutory Basis

The Exchange believes that the proposed rule change is consistent with Section 6(b) of the Act[7] in general, and furthers the objectives of section 6(b)(4)[8] in particular, in that it provides for the equitable allocation of reasonable dues, fees, and other charges among its members and other persons using its facilities.

B. Self-Regulatory Organization's Statement on Burden on Competition

The Exchange does not believe that the proposed rule change will impose any burden on competition that is not necessary or appropriate in furtherance of the purposes of the Act.

C. Self-Regulatory Organization's Statement on Comments on the Proposed Rule Change Received from Members, Participants, or Others

The Exchange has neither solicited nor received written comments on the proposed rule change.

III. Date of Effectiveness of the Proposed Rule Change and Timing for Commission Action

The foregoing rule change has become effective pursuant to section 19(b)(3)(A)(ii) of the Act[9] and subparagraph (f)(2) of Rule 19b–4,[10] because it establishes or changes a due, fee, or other charge imposed by the Exchange. At any time within 60 days of the filing of such proposed rule change, the Commission may summarily abrogate such rule change if it appears to the Commission that such action is necessary or appropriate in the public interest, for the protection of investors, or otherwise in furtherance of the purposes of the Act.

IV. Solicitation of Comments

Interested persons are invited to submit written data, views and arguments concerning the foregoing, including whether the proposed rule change is consistent with the Act. Persons making written submissions should file six copies thereof with the Secretary, Securities and Exchange Commission, 450 Fifth Street, NW., Washington, DC 20549–0609. Copies of the submission, all subsequent amendments, all written statements with respect to the proposed rule change that are filed with the Commission, and all written communications relating to the proposed rule change between the Commission and any person, other than those that may be withheld from the public in accordance with the provisions of U.S.C. 552, will be available for inspection and copying in the Commission's Public Reference Room. Copies of such filing will also be available for inspection and copying at the principal office of the PCX. All submissions should refer to File No. SR–PCX–00–41 and should be submitted by December 4, 2000.

For the Commission, by the Division of Market Regulation, pursuant to delegated authority.[11]

Margaret H. McFarland,

Deputy Secretary.

[FR Doc. 00–28947 Filed 11–9–00; 8:45 am]

BILLING CODE 8010–01–M

[5] *See* Securities Exchange Act Release No. 43020. (July 10, 2000) 65 FR 44558 (July 18, 2000).

[6] *See* Securities Exchange Act Release No. 43497 (March 6, 2000), 65 FR 14005 (March 15, 2000); Securities Exchange Act Release No. 42562 (March 22, 2000), 65 FR 16445 (March 28, 2000); Securities Exchange Act Release No. 43074 (July 26, 2000), 65 FR 47529 (August 2, 2000); Securities Exchange Act Release No. 43014 (July 6, 2000), 65 FR 43388 (July 13, 2000); Securities Exchange Act Release No. 43257 (September 6, 2000), 65 FR 55665 (September 14, 2000); and Securities Exchange Act Release No. 43279 (September 11, 2000), 65 FR 56606 (September 19, 2000).

[7] 15 U.S.C. 78(f)(b).

[8] 15 U.S.C. 78f(b)(4).

[9] 15 U.S.C. 78s(b)(3)(A)(ii).

[10] 17 CFR 240.19b–4(f)(2).

[11] 17 CFR 200.30–3(a)(12).

SMALL BUSINESS ADMINISTRATION

Region IX Hawaii District Advisory Council; Public Meeting

The Small Business Administration Region IX Hawaii District Advisory Council, located in the geographical area of Honolulu, Hawaii, will hold a public meeting at 10 a.m. on Thursday, November 30, 2000, at the Business Information and Counseling Center, 1111 Bishop Street, Suite 204, Training Center, Honolulu, HI 96813, to discuss such matters as may be presented by members, staff of the Small Business Administration, or others present. For further information write or call Andrew K. Poepoe, District Director U.S. Small Business Administration, 300 Ala Moana Boulevard, Room 2–235 Honolulu, Hawaii 96850; (808) 541–2965.

Bettie Baca,

Counselor to the Administrator/Public Liaison.

[FR Doc. 00–28906 Filed 11–9–00; 8:45 am]

BILLING CODE 8025–01–U

OFFICE OF THE UNITED STATES TRADE REPRESENTATIVE

Notice of Meeting of the Industry Sector Advisory Committee on Services (ISAC–13)

AGENCY: Office of the United States Trade Representative.

ACTION: Notice of Meeting.

SUMMARY: The Industry Sector Advisory Committee on Services will hold a meeting on November 21, 2000, from 9:00 a.m. to 12:30 p.m. The meeting will be opened to the public from 9:00 a.m. to 10:00 a.m., and closed to the public from 10:00 a.m. to 12:30 p.m.

DATES: The meeting is scheduled for November 21, 2000, unless otherwise notified.

ADDRESSES: The meeting will be held at the Department of Commerce, Conference Room B841–A, located at 14th Street between Pennsylvania and Constitution Avenues, NW., Washington, DC.

FOR FURTHER INFORMATION CONTACT: Karen Holderman, (202) 482–0345, Department of Commerce, 14th Street and Constitution Avenue, NW., Washington, DC 20230, or Dominic Bianchi, Office of the United States Trade Representative, 1724 F Street, NW., Washington, DC 20508, (202) 395–6120.

SUPPLEMENTARY INFORMATION: During the opened portion of the meeting the following topics will be discussed:

1. Review of ISAC Mission to Geneva.
2. Overview of GATS Work Program.
3. Review of Preparation of GATS Council for Trade in Services Meeting December 6, 2000.

Dominic Bianchi,

Acting Assistant United States Trade Representative for Intergovernmental Affairs and Public Liaison.

[FR Doc. 00–29047 Filed 11–8–00; 1:56 pm]

BILLING CODE 3190–01–M

DEPARTMENT OF TRANSPORTATION

Federal Aviation Administration

Public Notice For Waiver of Aeronautical Land-Use Assurance North Adams Airport, North Adams, Massachusetts

AGENCY: Federal Aviation Administration (FAA), DOT.

ACTION: Request for public comments; Notice of intent to waiver with respect to land.

SUMMARY: The FAA is considering a proposal that a portion of the airport (approximately 1.35 acres located on Airport Access Road) is not needed for aeronautical use, as shown on the Airport Layout Plan. There appear to be no impacts to the airports by allowing the airport the use of the land under a 25 year lease, with a 10 year extension, for professional and general business office purposes. The land was acquired by the airport under FAA Project No. 9–19–002–901 (portion of parcel 3).

In accordance with section 47107(h) of title 49, United States Code, the notice is required to be published in the **Federal Register** 30 days before modifying the land-use assurance that requires the property to be used for an aeronautical purposes.

The purpose of this lease is to make use of surplus land to generate needed revenue for the operations and maintenance of the airport.

DATES: Comments must be received on or before December 13, 2000.

ADDRESSES: Comments on this application may be mailed or delivered to the FAA at the following address: Mr. William Cronan, Special Projects Officer, Federal Aviation Administration, Airports Division, 12 New England Executive Park, Burlington Massachusetts 01803.

FOR FURTHER INFORMATION CONTACT: William Cronan, Special Projects Officer, 12 New England Executive Park, Burlington, Massachusetts 01803. Telephone number 781–238–7610/Fax number 781–238–7608. Documents reflecting the FAA action may be reviewed at the 16 New England Executive Park, Burlington, Massachusetts 01803 or at the North Adams and Harriman Airport, North Adams, Massachusetts.

SUPPLEMENTARY INFORMATION: This notice announces that the FAA intends to authorize the release of the subject airports property at the North Adams and Harriman Airport, North Adams, Massachusetts. The disposition of proceeds from the leasing of the airport property will be in accordance with FAA's policy and procedures concerning the use of the airport revenue, published in the **Federal Register** on February 16, 1999.

Issued in Burlington Massachusetts on November 3, 2000.

Vincent A. Scarano,

Manager, Airports Division, New England Region.

[FR Doc. 00–28995 Filed 11–9–00; 8:45 am]

BILLING CODE 4910–13–M

DEPARTMENT OF TRANSPORTATION

Federal Aviation Administration

Notice of Intent to Rule on Application 00–02–C–00–GRI to, Impose and Use the Revenue From a Passenger Facility Charge (PFC) at Central Nebraska Regional Airport, Grand Island, Nebraska

AGENCY: Federal Aviation Administration, (FAA), DOT.

ACTION: Notice of Intent to Rule on Application.

SUMMARY: The FAA proposes to rule and invites public comment on the application to impose and use the revenue from a PFC at Central Nebraska Regional Airport under the provisions of the Aviation Safety and Capacity Expansion Act of 1990 (Title IX of the Omnibus Budget Reconciliation Act of 1990) (Pub. L. 101–508) and part 158 of the Federal Aviation Regulations (14 CFR part 158).

DATES: Comments must be received on or before December 13, 2000.

ADDRESSES: Comments on this application may be mailed or delivered in triplicate to the FAA at the following address: Federal Aviation Administration, Central Region, Airports Division, 901 Locust, Kansas City, MO 64106.

In addition, one copy of any comments submitted to the FAA must be mailed or delivered to Mr. William

G. Stovall, Executive Director, Hall County Airport Authority, at the following address: Hall County Airport Authority, 3743 Sky Park Road, Grand Island, NE 68801.

Air carriers and foreign air carriers may submit copies of written comments previously provided to the Hall County Airport Authority under § 158.23 of part 158.

FOR FURTHER INFORMATION CONTACT: Lorna Sandridge, PFC Program Manager, FAA, Central Region, 901 Locust, Kansas City, MO 64106, (816) 329–2641. The application may be reviewed in person at this same location.

SUPPLEMENTARY INFORMATION: The FAA proposes to rule and invites public comment on the application to impose and use the revenue from a PFC at the Central Nebraska Regional Airport under the provisions of the Aviation Safety and Capacity Expansion Act of 1990 (Title IX of the Omnibus Budget Reconciliation Act of 1990) (Pub. L. 101–508) and part 158 of the Federal Aviation Regulations (14 CFR part 158).

On August 7, 2000, the FAA determined that the application to impose and use the revenue from a PFC submitted by the Hall County Airport Authority, Grand Island, Nebraska, was not substantially complete within the requirements of section 158.25 of part 158. The Hall County Airport Authority submitted supplemental information on October 6, 2000, to complete the application. The FAA will approve or disapprove the supplemental application, in whole or in part, no later than December 19, 2000.

The following is a brief overview of the application.

Level of the proposed PFC: $4.50.

Proposed charge effective date: March, 2001.

Proposed charge expiration date: November, 2007.

Total estimated PFC revenue: $578,060.

Brief description of proposed project(s): Ramp improvements; Terminal renovation and addition; Runway/taxiway cable replacement; Rehabilitate, relocate and reconstruct Runway 13/31; and Construct new taxiway.

Any person may inspect the application in person at the FAA office listed above under **FOR FURTHER INFORMATION CONTACT**.

In addition, any person may, upon request, inspect the application, notice and other documents germane to the application in person at the Central Nebraska Regional Airport.

Issued in Kansas City, Missouri on October 27, 2000.

George A. Hendon,

Manager, Airports Division, Central Region.

[FR Doc. 00–28994 Filed 11–9–00; 8:45 am]

BILLING CODE 4910–13–M

DEPARTMENT OF TRANSPORTATION

Federal Aviation Administration

Notice of Intent To Rule on Application To Impose and Use the Revenue From a Passenger Facility Charge (PFC) at Lake Charles Regional Airport, Lake Charles, LA

AGENCY: Federal Aviation Administration (FAA), DOT.

ACTION: Notice of intent to rule on application.

SUMMARY: The FAA proposes to rule and invites public comment on the application to impose and use the revenue from a PFC at Lake Charles Regional Airport under the provisions of the Aviation Safety and Capacity Expansion Act of 1990 (Title IX of the Omnibus Budget Reconciliation Act of 1990) (Pub. L. 101–508) and part 158 of the Federal Aviation Regulations (14 CFR part 158).

DATES: Comments must be received on or before December 13, 2000.

ADDRESSES: Comments on this application may be mailed or delivered in triplicate copies to the FAA at the following address: Mr. G. Thomas Wade, Federal Aviation Administration, Southwest Region, Airports Division, Planning and Programming Branch, ASW–611, Fort Worth, Texas 76193–0610.

In addition, one copy of any comments submitted to the FAA must be mailed or delivered to Alan Kratzer, Airport Manager for Lake Charles Regional Airport at the following address: Mr. Alan Kratzer, Airport Manager, Airport Authority of Calcasieu Parish, P.O. Drawer 5820, Lake Charles, LA 70606–5820.

Air carriers and foreign air carriers may submit copies of the written comments previously provided to the Airport under § 158.23 of part 158.

FOR FURTHER INFORMATION CONTACT: Mr. G. Thomas Wade, Federal Aviation Administration, Southwest Region, Airports Division, Planning and Programming Branch, ASW–611, Fort Worth, Texas 76193–0610, (817) 222–5613.

The application may be reviewed in person at this same location.

SUPPLEMENTARY INFORMATION: The FAA proposes to rule and invites public comment on the application to impose and use the revenue from a PFC at Lake Charles Regional Airport under the provisions of the Aviation Safety and Capacity Expansion Act of 1990 (Title IX of the Omnibus Budget Reconciliation Act of 1990) (Pub. L. 101–508) and part 158 of the Federal Aviation Regulations (14 CFR part 158).

On November 2, 2000 the FAA determined that the application to impose and use the revenue from a PFC submitted by the Airport was substantially complete within the requirements of § 158.25 of part 158. The FAA will approve or disapprove the application, in whole or in part, no later than March 1, 2001.

The following is a brief overview of the application.

Level of the proposed PFC: $3.00.

Proposed charge effective date: March 1, 2001.

Proposed charge expiration date: March 1, 2021.

Total estimated PFC revenue: $4,251,977.

PFC application number: 00–01–C–00–LCH.

Brief Description of Proposed Project(s)

Projects To Impose and Use PFC's

1. Terminal Improvement Project.
2. Expand Terminal Public Parking.
3. Renovation of the Aircraft Rescue and Firefighting Facility.
4. Security Fencing at General Aviation Area.
5. 1997 Terminal Improvement Project.
6. Professional Fees for Passenger Facility Charge Application Preparation.

Proposed class or classes of air carriers to be exempted from collecting PFC's: FAR Part 135 on demand air Taxi/Commercial Operator (ATCO) reporting on FAA Form 1800–31.

Any person may inspect the application in person at the FAA office listed above under **FOR FURTHER INFORMATION CONTACT** and at the FAA Regional Airports office located at: Federal Aviation Administration, Southwest Region, Airports Division, Planning and Programming Branch, ASW–610, 2601 Meacham Blvd., Fort Worth, Texas 76137–4298.

In addition, any person may, upon request, inspect the application, notice and other documents germane to the application in person at Lake Charles Regional Airport.

Issued in Fort Worth, Texas on November 2, 2000.

Naomi L. Saunders,

Manager, Airports Division.

[FR Doc. 00–28993 Filed 11–9–00; 8:45 am]

BILLING CODE 4910–13–M

DEPARTMENT OF TRANSPORTATION

Federal Aviation Administration

Study of Allowing Credit for Emergency Services Provided as Airport Local Share Under the Airport Improvement Program

AGENCY: Federal Aviation Administration (FAA), (DOT).

ACTION: Notice of Study of Allowing Credit for Emergency Services Provided as Airport Local Share under the Airport Improvement Program and of Opportunity to Provide Input.

SUMMARY: The Wendell H. Ford Aviation Investment and Reform Act for the 21st Century, (Pub. L. 106–181, April 5, 2000), cited below as AIR 21, includes a provision that requires the Federal Aviation Administration (FAA) to conduct a study and report the findings. Section 724, Credit for Emergency Services Provided, directs the FAA to study the appropriateness of allowing an airport that agrees to provide services to the Federal Emergency Management Agency (FEMA) or to a State or local agency, in the event of an emergency, a credit of the value of such services against the airport's local share under the Airport Improvement Program (AIP).

DATES: This study will be conducted by the FAA Office of the Associate Administrator for Airports, Airports Financial Assistance Division, Program Guidance Branch. It will be based on a review of comments submitted by potential beneficiaries and other information gained from experience with administration of the AIP. Nonhub and General Aviation airports are encouraged to submit comments explaining how the credit would benefit their airport. Comments should also address what sort of emergencies could qualify for such credit and how the costs would be quantified to determine the credit against the local share. Comments must be submitted on or before December 4, 2000.

ADDRESSES: Comments may be delivered or mailed to the FAA, Airports Financial Assistance Division, APP–500, Room 615, 800 Independence Ave, SW, Washington, DC 20591 (ATTN: Don Samuels, APP–510).

FOR FURTHER INFORMATION CONTACT: Mr. Don Samuels (Program Guidance Branch) Telephone (202) 267–8818.

SUPPLEMENTARY INFORMATION: The following is Section 724 of AIR 21.

''SEC. 724. CREDIT FOR EMERGENCY SERVICES PROVIDED

(a) **Study.**—The Administrator shall conduct a study of the appropriateness of allowing an airport that agrees to provide services to the Federal Emergency Management Agency or to a State or local agency in the event of an emergency a credit of the value of such services against the airport's local share under the airport improvement program.

(b) **Notification.**—The Administrator shall notify nonhub and general aviation airports that the Administrator is conducting the study under subsection (a) and give them an opportunity to explain how the credit described in subsection (a) would benefit such airports.

(c) **Report.**—Not later than 180 days after the date of the enactment of this Act, the Administrator shall transmit to Congress a report on the results of the study conducted under subsection (a). The report shall identify, at a minimum, the airports that would be affected by providing the credit described in subsection (a), explain what sort of emergencies could qualify for such credit, and explain how the costs would be quantified to determine the credit against the local share.''

Issued in Washington, DC on October 13, 2000.

Barry Molar,

Manager, Airports Financial Assistance Division.

[FR Doc. 00–28996 Filed 11–9–00; 8:45 am]

BILLING CODE 4910–13–M

DEPARTMENT OF TRANSPORTATION

Federal Highway Administration

Environmental Impact Statement: Iberia, St. Martin, and Lafayette Parishes, Louisiana

AGENCY: Federal Highway Administration (FHWA), DOT.

ACTION: Notice of Intent.

SUMMARY: The FHWA is issuing this notice to advise the public that an Environmental Impact Statement will be prepared for a proposed road project in Iberia, Lafayette, and St. Martin Parishes, Louisiana.

FOR FURTHER INFORMATION CONTACT: William C. Farr, Program Operations Manager, Federal Highway Administration, 5304 Flanders Drive, Suite A, Baton Rouge, Louisiana 70808, Telephone (225) 757–7615, Facsimile: (225) 757–7601.

SUPPLEMENTARY INFORMATION: The FHWA, in cooperation with the Louisiana Department of Transportation and Development (LDOTD), will prepare an Environmental Impact Statement (EIS) on a proposal to upgrade a portion of US 90 to a full ''Control of Access'' highway meeting current interstate standards. US 90 will become an extension of Interstate 49 (I–49). The proposed project passes through part of the City of Lafayette and the City of Broussard, Lafayette Parish, Louisiana. The approximate distance of the project is 12 miles.

The proposed improvements would provide sufficient capacity for hurricane evacuation routes, maintain access to abutting properties, and minimize adverse environmental and community impacts.

This portion of US 90 begins at the Lafayette Regional Airport in Lafayette Parish and extends to Route LA 88 in Iberia Parish.

Alternatives to be considered include: (1) Utilization of the existing right-of-way to the maximum extent practicable to incorporate a controlled access roadway with a one-way frontage road system; and (2) Utilization of the existing right-of-way to the maximum extent practicable to incorporate a controlled access roadway with a two-way frontage road system.

Letters describing the proposed action and soliciting comments will be sent to appropriate Federal, state, and local agencies and to private organizations, including groups of individuals who have expressed interest in the project in the past. There are no plans to hold a formal scoping meeting for the proposed action. At least one public informational meeting will be held in the project area that will be affected. In addition, a Public Hearing will be held. Public notice will be given of the time and place of the public informational meeting(s) and the Public Hearing. The draft EIS will be available for public and agency review and comment prior to the Public Hearing.

To ensure that the full range of issues related to this proposed action are addressed, and all significant issues identified, comments and suggestions are invited from all interested parties. Comments or questions concerning this proposed action and the EIS should be directed to the FHWA at the address provided above.

(Catalog of Federal Domestic Assistance Program Number 20.205, Highway Planning and Construction. The regulations implementing Executive Order 12372 regarding intergovernmental consultation on Federal programs and activities apply to this program.)

Issued on: October 31, 2000.

William A. Sussmann,

Division Administrator, FHWA, Baton Rouge, Louisiana.

[FR Doc. 00–28870 Filed 11–9–00; 8:45 am]

BILLING CODE 4910–22–M

DEPARTMENT OF TRANSPORTATION

Federal Highway Administration

Environmental Impact Statement; Manatee County, FL

AGENCY: Federal Highway Administration (FHWA), DOT.

ACTION: Notice of intent.

SUMMARY: The FHWA is issuing this notice to advise the public that an Environmental Impact Statement (EIS) will be prepared for a proposed highway project in Manatee County, Florida.

FOR FURTHER INFORMATION CONTACT: Dr. Donald Davis, Program Operations Engineer, Federal Highway Administration, 227 North Bronough Street, Suite 2015, Tallahassee, Florida 32301, Telephone: (850) 942–9650, Extension 3031.

SUPPLEMENTARY INFORMATION: The FHWA, in cooperation with the Florida Department of Transportation will prepare an EIS for a proposal to improve the north-south circulation between I–75 and Rye Road (CR 675). Part of this proposal is to evaluate increased vehicular capacity crossing the Manatee River. Improvements to the corridor are considered necessary to provide for projected traffic demand.

Alternatives under consideration include (1) taking no action; (2) widening mainline I–75 and the I–75 crossing of the River; (3) widening Rye Road; and (4) a new crossing of the Manatee River connecting a widened Fort Hamer Road to the north with a widened Upper Manatee River Road to the south.

Letters describing the proposed action and soliciting comments will be sent to appropriate Federal, state, and local agencies, and to private organizations and citizens who have expressed interest in this proposal. A series of public meetings will be held in Manatee County, Florida between October 2000 and September 2001. In addition a public hearing will be held. Public notice will be given of the time and place of the meetings and hearing. The Draft EIS (DEIS) will be made available for public and organizations reviews and comments prior to the public hearing. Per 40 CFR 1507.1, a scoping process will be developed as part of the project and a formal scoping meeting will be held.

To ensure that the full range of issues related to this proposed action are addressed and all significant issues identified, comments and suggestions are invited from all interested parties. Comments or questions concerning this proposed action and the EIS should be directed to the FHWA at the address provided above.

(Catalog of Federal Domestic Assistance Program Number 20.205, Highway Research, Planning and Construction. The regulations implementing Executive Order 12372 regarding inter-governmental consultation on Federal programs and activities apply to this program.)

Issued on: November 1, 2000.

Donald Davis,

Program Operations Engineer, Tallahassee, Florida.

[FR Doc. 00–28872 Filed 11–9–00; 8:45 am]

BILLING CODE 4910–22–M

DEPARTMENT OF TRANSPORTATION

Federal Highway Administration

Environmental Impact Statement (EIS); Sarasota and Charlotte Counties, FL

AGENCY: Federal Highway Administration (FHWA), DOT.

ACTION: Notice of Intent (NOI).

SUMMARY: The FHWA is issuing this notice to advise the public that an Environmental Impact Statement (EIS) will be prepared for a proposed highway project in Sarasota and Charlotte Counties, Florida.

FOR FURTHER INFORMATION CONTACT: Mr. Donald Davis, Programs Operation Engineer, Federal Highway Administration, 227 N. Bronough Street, Suite Room 2015, Tallahassee, Florida 32301–2015, Telephone: (850) 942–9650, Extension 3031.

SUPPLEMENTARY INFORMATION: The FHWA, in consultation with the Florida Department of Transportation, will prepare an EIS for a proposal to develop a north-south arterial linking S.R. 776 in the Englewood area of Charlotte County, Florida to I–75 in Sarasota County, Florida. The project area is approximately 48 square miles, which is four miles wide by 12 miles in length. The project limits are from the vicinity of the S.R. 776/Pine Street intersection to the I–75 interchange at River Road. This project is commonly referred to as the Englewood Interstate Connector. This project has been identified as a high priority by both the Sarasota/Manatee and Charlotte County-Punta Gorda Metropolitan Planning Organizations and is needed to accommodate future growth and to serve as an additional hurricane evacuation route. Alternatives to be considered for this arterial will include a new roadway alignment(s), utilizing the existing River Road alignment and a combination of each. A no-build alternative will also be considered.

Letters describing the appropriate action and soliciting comments will be sent to appropriate Federal, State, and local agencies, and to private organizations and citizens who have expressed an interest in this proposal. Public meetings will be held in the study area until June 2001. In addition, a Public Hearing will be held in the study area. Public notice will be given of the time and place of the meetings and hearings. The Draft EIS will be made available to the public and organizations for their review and comments. The formal scoping meeting date is not available at this time.

To ensure that the full range of issues related to the proposed action are addressed and all significant issues identified, comments and suggestions are invited from all interested parties.

Comments or questions concerning this proposed action and the EIS should be directed to the FHWA at the address provided above.

(Catalog of Federal Domestic Assistance Program Number 20.205, Highway Research, Planning and Construction. The regulations implementing Executive Order 12372 regarding inter-governmental consultation on Federal programs and activities apply to this program.)

Issued On: November 1, 2000.

Donald Davis,

Program Operations Engineer, Tallahassee, Florida.

[FR Doc. 00–28871 Filed 11–9–00; 8:45 am]

BILLING CODE 4910–22–M

DEPARTMENT OF TRANSPORTATION

Federal Highway Administration

Environmental Impact Statement: St. Mary Parish, Louisiana

AGENCY: Federal Highway Administration (FHWA), DOT.

ACTION: Notice of Intent.

SUMMARY: The FHWA is issuing this notice to advise the public that an Environmental Impact Statement will be prepared for a proposed road project in St. Mary Parish, Louisiana.

FOR FURTHER INFORMATION CONTACT: William C. Farr, Program Operations Manager, Federal Highway Administration, 5304 Flanders Drive, Suite A, Baton Rouge, Louisiana, 70808, Telephone: (225) 757–7615, Facsimile: (225) 757–7601.

SUPPLEMENTARY INFORMATION: The FHWA, in cooperation with the Louisiana Department of Transportation and Development (LDOTD), will prepare an Environmental Impact Statement (EIS) on a proposal to

upgrade a portion of US 90 to a full ''Control of Access'' highway meeting current interstate standards. US 90 will become an extension of Interstate 49 (I–49). The proposed project passes through the municipalities of Patterson and Berwick as well as the unincorporated community of Bayou Vista, St. Mary Parish, Louisiana. The approximate distance of the project is 9 miles.

The proposed improvements would provide sufficient capacity for hurricane evacuation routes, maintain access to abutting properties, and minimize adverse environmental and community impacts.

This portion of US 90 begins east of the Wax Lake Outlet Bridge and extends to the interchange with LA 182 in Berwick, St. Mary Parish.

Alternatives to be considered include: (1) Utilization of the existing right-of-way to the maximum extent practicable to incorporate a controlled access roadway with a one-way frontage road system; and (2) Utilization of the existing right-of-way to the maximum extent practicable to incorporate a controlled access roadway with a two-way frontage road system.

Letters describing the proposed action and soliciting comments will be sent to appropriate Federal, state, and local agencies and to private organizations, including groups of individuals who have expressed interest in the project in the past. There are no plans to hold a formal scoping meeting for the proposed action. At least one public informational meeting will be held in the project area that will be affected. In addition, a Public Hearing will be held. Public notice will be given of the time and place of the public informational meeting(s) and the Public Hearing. The draft EIS will be available for public and agency review and comment prior to the Public Hearing.

To ensure that the full range of issues related to this proposed action are addressed, and all significant issues identified, comments and suggestions are invited from all interested parties. Comments or questions concerning this proposed action and the EIS should be directed to the FHWA at the address provided above.

(Catalog of Federal Domestic Assistance Program Number 20.205, Highway Planning and Construction. The regulations implementing Executive Order 12372 regarding intergovernmental consultation on Federal programs and activities apply to this program.)

Issued on: October 31, 2000.

William A. Sussmann,

Division Administrator, FHWA, Baton Rouge, Louisiana.

[FR Doc. 00–28869 Filed 11–9–00; 8:45 am]

BILLING CODE 4910–22–M

DEPARTMENT OF TRANSPORTATION

Research and Special Programs Administration

[Docket No. RSPA–2000–6944 (Notice No. 00–12)]

Reports, Forms and Recordkeeping Requirements Agency Information Collection Activity Under OMB Review

AGENCY: Research and Special Programs Administration (RSPA), DOT.

ACTION: Notice and request for comments

SUMMARY: In compliance with the Paperwork Reduction Act of 1995 (44 U.S.C. 3501 *et seq.*), this notice announces that the Information Collections Requests (ICRs) abstracted below have been forwarded to the Office of Management and Budget (OMB) for review and comments. The ICRs describe the nature of the information collections and their expected burden. The **Federal Register** Notice with a 60-day comment period soliciting comments on the following collections of information was published on August 21, 2000, (65 FR 50741). One comment was received regarding OMB Control No. 2137–0034, Hazardous Materials Shipping Papers & Emergency Response Information.

DATES: Comments must be submitted on or before December 13, 2000.

FOR FURTHER INFORMATION CONTACT: Deborah Boothe, Office of Hazardous Materials Standards (DHM–10), Research and Special Programs Administration, Room 8422, 400 Seventh Street, SW, Washington, DC 20590–0001, Telephone (202) 366–8553.

SUPPLEMENTARY INFORMATION:

Title: Hazardous Materials Shipping Papers & Emergency Response Information.

OMB Control Number: 2137–0034.

Type of Request: Extension of a currently approved collection.

Abstract: This information collection consolidates and describes the information collection provisions in parts 172, 174, 175, 176, and 177 of the HMR on the shipping paper and emergency response requirements for the transportation of hazardous materials in commerce. Shipping papers and emergency response information are a basic communication tool used in the safe transportation of hazardous materials. They serve as a principal means of identifying hazardous materials during transportation, including emergencies, by providing the proper shipping name, hazard class, UN or NA identification number, packing group and quantity of each hazardous material being transported. Shipping papers also provide emergency response information for use in the mitigation of an incident, and an emergency response telephone number for use in the event of an emergency. The telephone number must be monitored at all times the hazardous material is in transportation, by a person who is either knowledgeable of the hazardous material being shipped and has comprehensive emergency response and incident mitigation information for that material, or has immediate access to a person who posses such knowledge and information. Shipping papers also serve as a means of notifying transport workers that hazardous materials are present, so that the proper loading, unloading, handling and safety procedures may be followed.

One comment was received from the Hazardous Materials Advisory Council (HMAC) requesting clarification on the basis of the 6,500,000 burden hours for the preparation of shipping papers. HMAC cited a recent RSPA study completed in August 1998 that estimated there are 800,000 daily shipments of hazardous materials in commerce, most requiring the preparation of shipping papers. According to the August 1998 RSPA study, shipments are defined as equivalent to deliveries, and in most instances may be distinguished from the number of movements, trip segments, or other measures. The estimated number of movements associated with these shipments exceeds 1.2 million per day. Because most of the 800,000 daily shipments are accomplished with one shipping paper and some require multiple shipping papers, RSPA has estimated the annual number of shipments for shipping paper calculation purposes to be approximately 1 million shipments per day. The information collection estimates used by RSPA average out to 1 million/day x 5 days/week x 52 weeks or 260 million shipments per year. These estimates are averages based on the average time it takes all shippers to complete shipping paper. This includes shippers who prepare shipping papers once a year manually, as well as those shippers who ship hundreds of material daily using a permanent reusable

shipping paper, and shippers who use computer generated shipping papers that can be printed out in seconds. RSPA acknowledges that it may take more than 1 minute 30 seconds to prepare a number of shipping papers. However, other shipping papers can be prepared more quickly by using data programs, especially for shippers who continually ship the same hazardous materials.

Affected Public: Shippers and carriers of hazardous materials in intrastate, interstate, and foreign commerce.

Estimated Number of Respondents: 250,000.

Estimated Number of Responses: 260,000,000.

Annual Estimated Burden Hours: 6,500,000.

Frequency of Collection: Annually.

Title: Radioactive (RAM) Transportation Requirements.

OMB Control Number: 2137–0510.

Type of Request: Extension of a currently approved collection.

Abstract: This information collection consolidates and describes the information collection provisions in the HMR (49 CFR parts 171–180) involving the transportation of radioactive materials in commerce. Information collection requirements for RAM include: shipper notification to consignees of the dates of shipment of RAM; expected arrival; special loading/unloading instructions; verification that shippers using foreign-made packages hold a foreign competent authority certificate and verification that the terms of the certificate are being followed for RAM shipments being made into this country; and specific handling instructions from shippers to carriers for fissile RAM, bulk shipments of low specific activity RAM and packages of RAM which emit high levels of external radiation. These information collection requirements help to establish that proper packages are used for the type of radioactive material being transported; external radiation levels do not exceed prescribed limits; packages are handled appropriately and delivered in a timely manner, so as to ensure the safety of the general public, transport workers, and emergency responders.

Affected Public: Shippers and carriers of radioactive materials in commerce.

Estimated Number of Respondents: 3,807.

Estimated Number of Responses: 21,319.

Annual Estimated Burden Hours: 14,480.

Frequency of Collection: Periodically.

ADDRESSES: Send comments regarding the burden estimate, including suggestions for reducing the burden, to Office of Management and Budget, Attention: Desk Officer for RSPA, 725 17th Street, NW., Washington, DC 20503.

Comments are invited on: whether the proposed collection of information is necessary for the proper performance of the functions of the Department, including whether the information will have practical utility; the accuracy of the Department's estimate of the burden of the proposed information collection; ways to enhance the quality, utility and clarity of the information to be collected; and ways to minimize the burden of the collection of information on respondents, including the use of automated collection techniques or other forms of information technology.

A comment to OMB is most effective if OMB receives it within 30 days of publication.

Issued in Washington, DC on November 7, 2000.

Edward T. Mazzullo,

Director, Office of Hazardous Materials Standards.

[FR Doc. 00–28986 Filed 11–9–00; 8:45 am]

BILLING CODE 4910–60–P

DEPARTMENT OF TRANSPORTATION

Research and Special Programs Administration

Office of Hazardous Materials Safety; Notice of Delays in Processing of Exemption Applications

AGENCY: Research and Special Programs Administration, DOT.

ACTION: List of Applications Delayed more than 180 days.

SUMMARY: In accordance with the requirements of 49 U.S.C. 5117(c), RSPA is publishing the following list of exemption applications that have been in process for 180 days or more. The reason(s) for delay and the expected completion date for action on each application is provided in association with each identified application.

FOR FURTHER INFORMATION CONTACT: J. Suzanne Hedgepeth, Director, Office of Hazardous Materials, Exemptions and Approvals, Research and Special Programs Administration, U.S. Department of Transportation, 400 Seventh Street, SW., Washington, DC 20590–0001, (202) 366–4535.

Key to ''Reasons for Delay''

1. Awaiting additional information from applicant
2. Extensive public comment under review
3. Application is technically complex and is of significant impact or precedent-setting and requires extensive analysis
4. Staff review delayed by other priority issues or volume of exemption applications

Meaning of Application Number Suffixes

N—New application

M—Modification request

PM—Party to application with modification request

Issued in Washington, DC, on November 6, 2000.

R. Ryan Posten,

Exemptions Program Officer, Office of Hazardous Materials, Exemptions and Approvals.

NEW EXCEPTION APPLICATIONS

Application No.	Applicant	Reason for delay	Estimated date of completion
11862–N	The BOC Group, Murray Hill, NJ	4	12/29/2000
11927–N	Alaska Marine Lines, Inc. Seattle, WA	4	12/29/2000
12125–N	Mayo Foundation, Rochester, MN	4	11/30/2000
12142–N	Aristech Chemical Corp., Pittsburgh, PA	4	12/29/2000
12158–N	Hickson Corporation, Conley, GA	4	12/29/2000
12181–N	Aristech, Pittsburgh, PA	4	12/29/2000
12248–N	Ciba Specialty Chemicals Corp., High Point, NC	4	12/29/2000
12277–N	The Indian Sugar & General Engineering Corp. ISGE, Haryana, IX	1	11/30/2000

NEW EXCEPTION APPLICATIONS—Continued

Application No.	Applicant	Reason for delay	Estimated date of completion
12281–N ..	ABS Group, Inc., Houston, TX	4	12/29/2000
12290–N ..	Savage Industries, Inc., Pottstown, PA	4	12/29/2000
12307–N ..	Kern County Dept. of Weights & Measures, Bakersfield, CA	4	12/29/2000
12332–N ..	Automotive Occupant Restraints Council, Lexington, KY	4	12/29/2000
12339–N ..	BOC Gases, Murray Hill, NJ	4	12/29/2000
12343–N ..	City Machine & Welding, Inc. of Amarillo, Amarillo, TX	1	12/29/2000
12351–N ..	Nalco/Exxon Energy Chemicals, L.P., Freeport, TX	4	11/30/2000
12353–N ..	Monson Companies, South Portland, ME	4	12/29/2000
12355–N ..	Union Tank Car Company, East Chicago, IN	4	12/29/2000
12368–N ..	Occidental Chemical Corp., Dallas, TX	4	12/29/2000
12381–N ..	Ideal Chemical & Supply Co., Memphis, TN	4	12/29/2000
12397–N ..	FMC Corporation, Philadelphia, PA	4	12/29/2000
12406–N ..	Occidental Chemical Corporation, Dallas, TX	4	12/29/2000
12412–N ..	Great Western Chemical Company, Portland, OR	4	12/29/2000
12422–N ..	Connecticut Yankee Atomic Power Co., East Hampton, CT	4	12/29/2000
12427–N ..	Chubb Fire Ltd., England	4	11/30/2000
12433–N ..	The Lighter Company, Inc., Miami, FL	4	12/29/2000
12434–N ..	Salmon Air, Salmon, ID	4	12/29/2000
12440–N ..	Luxfer Inc., Riverside, CA	4	01/31/2001
12443–N ..	ChemCentral/Charlotte, Charlotte, NC	4	01/31/2001
12444–N ..	ST Services, Dallas, TX	4	01/31/2001
12446–N ..	Japan Defense Agency, Redstone Arsenal, AL	1	11/30/2000
12454–N ..	Ethyl Corp., Richmond, VA	4	01/31/2001
12455–N ..	United States Marine Safety Association, Philadelphia, PA	4	01/31/2000
12456–N ..	Baker Hughes, Houston, TX	4	01/31/2001
12457–N ..	Arch Chemicals, Inc., Norwalk, CN	4	12/29/2000
12468–N ..	Connecticut Yankee Atomic Power Co., East Hampton, CT	4	11/30/2000
12469–N ..	Department of Energy, Germantown, MD	4	01/31/2001
12473–N ..	Old Bridge Metals & Chemicals, Inc., Old Bridge, NJ	4	01/31/2001

MODIFICATIONS TO EXEMPTIONS

Application No.	Applicant	Reason for delay	Estimated date of completion
6658–M	Mason & Hanger Corp. (USDOE/Pantex Plant), Amarillo, TX	4	11/30/2000
8299–M	Pacific Scientific, Duarte, CA	4	11/30/2000
8308–M	Tradewind Enterprises, Inc., Hillsboro, OR	4	11/30/2000
8556–M	Gardner Cryogenics, Lehigh Valley, PA	4	11/30/2000
10656–M ..	Conf. of Radiation Control Program Directors, Inc., Frankfort, KY	4	11/30/2000
11296–M ..	Heritage Transport, LLC, Indianapolis, IN	4	11/30/2000
11316–M ..	TRW Automotive, Queen Creek, AZ	4	01/31/2001
11537–M ..	JCI Jones Chemicals, Inc., Milford, VA	4	12/29/2000
11769–M ..	Great Western Chemical Company, Portland, OR	4	11/30/2000
11769–M ..	Great Western Chemical Company, Portland, OR	4	12/29/2000
11769–M ..	Hydrite Chemical Company, Brookfield, WI	4	12/29/2000
11798–M ..	Air Products and Chemicals, Inc., Allentown, PA	1, 4	12/29/2000
11798–M ..	Anderson Development Company, Adrian, MI	4	12/29/2000
11911–M ..	Transfer Flow, Inc., Chico, CA	4	01/31/2001
11916–M ..	CP Industries, Inc., McKeesport, PA	4	01/31/2001
12074–M ..	Van Hool NV, B–2500 Lier Koningshooikt, BG	1	12/29/2000
12178–M ..	STC Technologies, Inc., Bethlehem, PA	1	11/30/2000

[FR Doc. 00–28919 Filed 11–9–00; 8:45 am]

BILLING CODE 4910–60–M

DEPARTMENT OF TRANSPORTATION

Surface Transportation Board

[STB Docket Nos. AB–33 (Sub-No. 158X) and AB–406 (Sub-No. 12X]

Union Pacific Railroad Company—Abandonment Exemption—in McPherson, Ellsworth and Rice Counties, KS and Central Kansas Railway Limited Liability Company—Discontinuance of Service Exemption—in McPherson, Ellsworth and Rice Counties, KS

On October 24, 2000, Union Pacific Railroad Company (UP) and Central Kansas Railway Limited Liability Company (CKR) jointly filed with the Surface Transportation Board (Board) a petition under 49 U.S.C. 10502 for exemption from the provisions of 49 U.S.C. 10903 for UP to abandon and for CKR to discontinue service over a rail line: (1) Between milepost 523.02, near Geneseo and milepost 495.80, near Lindsborg; and (2) between milepost 531.40 and milepost 530.60, near Lindsborg, a total distance of 28.02 miles in McPherson, Ellsworth and Rice Counties, KS. The line traverses U.S. Postal Service Zip Codes 67444, 67456, and 67464, and includes the non-agency stations of Lindsborg (mileposts 495.80 and 531.0), Marquette (milepost 505.60), Crawford (milepost 518.20), and Geneseo (milepost 524.50).

The line does not contain federally granted rights-of-way. Any documentation in petitioners' possession will be made available promptly to those requesting it.

The interest of railroad employees will be protected by the conditions set forth in *Oregon Short Line R. Co.—Abandonment—Goshen,* 360 I.C.C. 91 (1979).

By issuance of this notice, the Board is instituting an exemption proceeding pursuant to 49 U.S.C. 10502(b). A final decision will be issued by February 9, 2001.

Any offer of financial assistance (OFA) under 49 CFR 1152.27(b)(2) will be due no later than 10 days after service of a decision granting the petition for exemption. Each offer must be accompanied by a $1,000 filing fee. See 49 CFR 1002.2(f)(25).

All interested persons should be aware that, following abandonment of rail service and salvage of the line, the line may be suitable for other public use, including interim trail use. Any request for a public use condition under 49 CFR 1152.28 or for trail use/rail banking under 49 CFR 1152.29 will be due no later than December 4, 2000. Each trail use request must be accompanied by a $150 filing fee. *See* 49 CFR 1002.2(f)(27).

All filings in response to this notice must refer to STB Docket No. AB–33 (Sub-No. 158X) and STB Docket No. AB–406 (Sub-No. 12X) and must be sent to: (1) Surface Transportation Board, Office of the Secretary, Case Control Unit, 1925 K Street, NW., Washington, DC 20423–0001; (2) James P. Gatlin, 1416 Dodge Street #830, Omaha, NE 68179; and (3) Karl Morell, 1455 F St., NW., Suite 225, Washington, DC 20005. Replies to the petition are due on or before December 4, 2000.

Persons seeking further information concerning abandonment procedures may contact the Board's Office of Public Services at (202) 565–1592 or refer to the full abandonment or discontinuance regulations at 49 CFR part 1152. Questions concerning environmental issues may be directed to the Board's Section of Environmental Analysis (SEA) at (202) 565–1545. [TDD for the hearing impaired is available at 1–800–877–8339.]

An environmental assessment (EA) (or environmental impact statement (EIS), if necessary) prepared by SEA will be served upon all parties of record and upon any agencies or other persons who commented during its preparation. Other interested persons may contact SEA to obtain a copy of the EA (or EIS). EAs in these abandonment proceedings normally will be made available within 60 days of the filing of the petition. The deadline for submission of comments on the EA will generally be within 30 days of its service.

Board decisions and notices are available on our website at ''WWW.STB.DOT.GOV.''

Decided: November 6, 2000.

By the Board, David M. Konschnik, Director, Office of Proceedings.

Vernon A. Williams,

Secretary.

[FR Doc. 00–28987 Filed 11–9–00; 8:45 am]

BILLING CODE 4915–00–P

DEPARTMENT OF THE TREASURY

Office of Thrift Supervision

[AC–3: OTS Nos. 02461 and H–3365]

FloridaFirst Bancorp, Lakeland, Florida; Approval of Conversion Application

Notice is hereby given that on November 3, 2000, the Managing Director, Office of Supervision, Office of Thrift Supervision, or his designee, acting pursuant to delegated authority, approved the application of FloridaFirst Bank, Lakeland, Florida, to convert to the stock form of organization. Copies of the application are available for inspection at the Dissemination Branch, Office of Thrift Supervision, 1700 G Street, NW, Washington, DC 20552, and the Southeast Regional Office, Office of Thrift Supervision, 1475 Peachtree Street, NE, Atlanta, GA 30309.

Dated: November 7, 2000.

By the Office of Thrift Supervision.

Nadine Y. Washington,

Corporate Secretary.

[FR Doc. 00–28980 Filed 11–9–00; 8:45 am]

BILLING CODE 6720–01–M

Corrections

Federal Register

Vol. 65, No. 219

Monday, November 13, 2000

This section of the FEDERAL REGISTER contains editorial corrections of previously published Presidential, Rule, Proposed Rule, and Notice documents. These corrections are prepared by the Office of the Federal Register. Agency prepared corrections are issued as signed documents and appear in the appropriate document categories elsewhere in the issue.

ENVIRONMENTAL PROTECTION AGENCY

40 CFR Part 52

[MT–001–0024, MT–001–0025, MT–001–0026; FRL–6883–6]

Clean Air Act Approval and Promulgation of Air Quality Implementation Plan; Montana; East Helena Lead State Implementation Plan

Correction

In proposed rule document 00–25929 beginning on page 60144 in the issue of Tuesday, October 10, 2000, make the following correction:

1. On page 30147, in the table, under the heading ''Description '', in the fifth line, after ''similar'', add ''provisions ''.

2. On the same page, in the first column, in footnote 2, in the 12th line, after ''our'' add ''approval of the modification or alternative. (We caution that our failure to make such''.

3. On the same page, in the second column, in footnote 2, in the first line, ''mentodology'' should read ''methodology''.

4. On the same page, in the same column, in the same footnote, in the fourth line, after ''revision'' add ''in accordance with the provisions of Title I of the Act, pursuant to notice and comment''.

5. On the same page, in the same column, in footnote 3, in the fifth line, ''march'' should read ''March''.

6. On the same page, in the same column, in the same footnote, in the last line, ''Pager'' should read ''Paper''.

7. On the same page, in the third column, in the same footnote, in the second line, ''discuss'' should read ''discusses'' and ''provess'' should read ''process''.

8. On the same page, in the same column, in the same footnote, in the fifth line, ''sate'' should read ''State''; ''actucally using'' should read ''actually issuing''.

9. On the same page, in the same column, in the same footnote, in the sixth line, ''source-specicfic'' should read ''source-specific ''.

10. On the same page, in the same column, remove the first footnote 4.

[FR Doc. C0–25929 Filed 11–9–00; 8:45 am]

BILLING CODE 1505–01–D

ENVIRONMENTAL PROTECTION AGENCY

40 CFR Part 52

[AL–200018; FRL–6892–2]

Approval and Promulgation of State Implementation Plans (SIP) for the State of Alabama–Call for 1-Hour Attainment Demonstration for the Birmingham, Alabama Marginal Ozone Nonattainment Area

Correction

In rule document 00–27584 beginning on page 64352 in the issue of Friday, October 27, 2000, make the following correction:

§52.66 [Corrected]

On page 64357, in the second column, in §52.66(b), in the fourth line, ''April 27, 2000'' should read ''April 27, 2001''.

[FR Doc. C0–27584 Filed 11–9–00; 8:45 am]

BILLING CODE 1505–01–D

DEPARTMENT OF THE INTERIOR

Fish and Wildlife Service

50 CFR Part 17

RIN 1018–AG71

Endangered and Threatened Wildlife and Plants; Determinations of Whether Designation of Critical Habitat Is Prudent for 81 Plants and Proposed Designations for 76 Plants From the Islands of Kauai and Niihau, Hawaii

Correction

In proposed rule document 00–28214 beginning on page 66808 in the issue of Tuesday, November 7, 2000, make the following correction:

On page 66808, in the second column, in the **DATES** section, ''December 7, 2000'' should read ''January 8, 2001''.

[FR Doc. C0–28214 Filed 11–9–00; 8:45 am]

BILLING CODE 1505–01–D

DEPARTMENT OF JUSTICE

Drug Enforcement Administration

21 CFR Part 1313

[DEA–197P]

RIN 1117–AA53

Waiver of Advance Notification Requirement to Import Acetone, 2-Butanone (MEK), and Toluene

Correction

In proposed rule document 00–27426 beginning on page 63822 in the issue of Wednesday, October 25, 2000, make the following correction:

On page 63824, in the first column, under the **List of Subjects in 21 CFR Part 1313**, in the fourth line, ''recording'' should read ''recordkeeping''.

[FR Doc. C0–27426 Filed 11–9–00; 8:45 am]

BILLING CODE 1505–01–D

LEGAL SERVICES CORPORATION

Sunshine Act Meeting of the Board of Directors

Correction

In notice document 00–28460 beginning on page 66563, in the issue of Monday, November 6, 2000, make the following correction:

On page 66563, in the third column, under the heading **Open Session**, in the eighth line, '' Esther Lardent, ABA Director of the Pro Bono Center'' should read ''Esther Lardent, Representative of the ABA's Standing Committee on Legal Aid and Indigent Defendants''.

[FR Doc. C0–28460 Filed 11–9–00; 8:45 am]

BILLING CODE 1505–01–D

Federal Register

Monday,
November 13, 2000

Part II

Department of Health and Human Services

Health Care Financing Administration

42 CFR Part 419

Medicare Program; Prospective Payment System for Hospital Outpatient Services; Interim Final Rule

DEPARTMENT OF HEALTH AND HUMAN SERVICES

Health Care Financing Administration

42 CFR Part 419

[HCFA–1005–IFC]

RIN 0938–A156

Medicare Program; Prospective Payment System for Hospital Outpatient Services

AGENCY: Health Care Financing Administration (HCFA), HHS.

ACTION: Interim final rule with comment period.

SUMMARY: This interim final rule with comment period provides for the annual update to the Medicare hospital outpatient prospective payment system conversion factor that is used to calculate the payment amount for each payment group, effective January 1, 2001. It also updates the wage index values and incorporates the year 2001 changes in the procedure codes that are used to make payments under this system. In this rule, we are also responding to public comments received on those portions of the April 7, 2000 final rule with comment period (which established the hospital outpatient prospective payment system) that implemented related provisions of the Balanced Budget Refinement Act (BBRA) of 1999. In addition, we are responding to public comments on the August 3, 2000 interim final rule with comment period that modified the April 7, 2000 final rule with comment period by revising the criteria used to define new or innovative medical devices, drugs, and biologicals eligible for transitional pass-through payments and correcting the criteria for grandfathering provider-based Federally Qualified Health Centers (FQHC) into the prospective payment system.

DATES:

Effective Date: These regulations are effective on January 1, 2001.

Comment Period: We will consider comments if we receive them at the appropriate address, as provided below, no later than 5 p.m. on January 12, 2001.

ADDRESSES: Mail written comments (1 original and 3 copies) to the following address:

Health Care Financing Administration, Department of Health and Human Services, Attention: HCFA–1005–IFC, P.O. Box 8013, Baltimore, MD 21244–8013.

To ensure that mailed comments are received in time for us to consider them, please allow for possible delays in delivering them.

If you prefer, you may deliver your written comments (1 original and 3 copies) to one of the following addresses:

Room 443–G, Hubert H. Humphrey Building, 200 Independence Avenue, SW., Washington, DC 20201, or

Room C5–14–03, 7500 Security Boulevard, Baltimore, MD 21244–1850.

Comments mailed to the above addresses may be delayed and received too late for us to consider them. Because of staff and resource limitations, we cannot accept comments by facsimile (FAX) transmission. In commenting, please refer to file code HCFA–1005–IFC. of the received timely will be available for public inspection as they are received, generally beginning approximately 3 weeks after publication of a document, in Room 443–G of the Department's office at 200 Independence Avenue, SW., Washington, DC, on Monday through Friday of each week from 8:30 to 5 p.m. (phone: (202) 690–7890).

FOR FURTHER INFORMATION CONTACT:

Janet Wellham (410) 786–4510, Chuck Braver, (410) 786–6719, or Jana Petze (410) 786–9374, (for general information).

Kity Ahern, (410) 786–4515 (for information related to ambulatory payment classification groups and transitional pass-through payments related to drugs and biologicals).

Majorie Baldo, (410) 786–4617 or Barry Levi, (410) 786–4529 (for information related to transitional pass-through payments for medical devices).

George Morey (410) 786–4653 (for information related to the criteria for grandfathering provider-based FQHCs into the prospective payment system).

SUPPLEMENTARY INFORMATION:

Availability of Copies and Electronic Access

Copies: To order copies of the **Federal Register** containing this document, send your request to: New Orders, Superintendent of Documents, P.O. Box 371954, Pittsburgh, PA 15250–7954. Specify the date of the issue requested and enclose a check or money order payable to the Superintendent of Documents, or enclose your Visa or Master Card number and expiration date. Credit card orders can also be placed by calling the order desk at (202) 512–1800 or by faxing to (202) 512–2250. The cost for each copy is $8. As an alternative, you can view and photocopy the **Federal Register** document at most libraries designated as Federal Depository Libraries and at many other public and academic libraries throughout the country that receive the **Federal Register**.

This **Federal Register** document is also available from the **Federal Register** online database through GPO Access, a service of the U.S. Government Printing Office. The Website address is http://www.access.gpo.gov /nara/index.html.

To assist readers in referencing sections contained in this document, we are providing the following table of contents:

Table of Contents

I. Background

A. General Summary of April 7, 2000 Final Rule With Comment Period that Implemented Amendments Enacted by the Balanced Budget Act of 1997 and the Balanced Budget Refinement Act of 1999

B. June 30, 2000 Notice of Delay of Effective Date for the April 7, 2000 Final Rule with Comment Period

C. August 3, 2000 Interim Final Rule with Comment Period

D. Summary of This Interim Final Rule with Comment Period

II. Analysis of, and Responses to, Public Comments on the BBRA 1999 Provisions and the August 3, 2000 Interim Final Rule with Comment Period

A. April 7, 2000 BBRA 1999 Provisions

1. Outlier Adjustment
2. Transitional Pass-Through for Additional Costs of Innovative Medical Devices, Drugs, and Biologicals
   a. Definition of a device
   b. Eligibility criteria
   c. Investigational device exemption (IDE) device
   d. Removing cost of predicate item
   e. Excluded costs
   f. Effect on conversion factor
   g. Cost significance tests
   h. Brand-specific versus categorization approaches
   i. Issues pertaining to specific items
   j. Pass-through applications process
   k. Payment for pass-through items
   l. Focus medical review
3. Budget Neutrality Applied to New Adjustments
4. Limitation on Judicial Review
5. Inclusion in the Hospital Outpatient Prospective Payment System of Certain Implantable Items
6. Payment Weights Based on Median or Mean Hospital Costs
7. Limitation on Variation of Costs of Services Classified Within a Group
8. Annual Review of the Components of the Hospital Outpatient Prospective Payment System
9. Copayment Amounts Not Affected by Pass-Throughs
10. Extension of Cost Reductions
11. Clarification of Congressional Intent Regarding Base Amounts Used in Determining the Hospital Outpatient Prospective Payment System

12. Transitional Corridors for Application of Outpatient Prospective Payment System
a. Interim payment versus final settlement
b. Payment-to-cost ratios
c. Cost-to-charge ratios
d. Interim payments limited to 85 percent of the estimated transitional corridor payment
e. Providers having more than one 1996 cost report
f. Providers having no 1996 cost report
g. Prospective payment system delay and transitional corridor payments
h. Rural hold-harmless provision
i. Covered charges
j. Cancer hospitals and transitional corridor payments
k. Teaching hospitals and transitional corridor payments
13. Limitation on Coinsurance for a Procedure
14. Reclassification of Certain Hospitals
B. August 3, 2000 Interim Final Rule With Comment Period
1. Transitional Pass-Through Provisions
a. ''Not insignificant'' cost criteria
b. Definition of medical device
2. Revision to Grandfather Provision for Certain FQHCs and ''Look-Alikes''
3. Clarification of Notice of Beneficiary Cost-Sharing Liability
4. Clarification of Protocols for Off-Campus Departments
5. Typographical Errors in the Provider-Based Regulations
III. Provisions of This Interim Final Rule With Comment Period
A. Changes Relating to the BBRA 1999 Public Comments
B. Annual Updates to Components of the Hospital Outpatient Prospective Payment System
1. APC Groups
a. New codes
b. Deleted codes
c. Revisions to correct errors or inconsistencies
d. Device-related codes
e. Inpatient codes moved to the outpatient setting
f. ''Two-times'' rule
g. Inpatient codes moved to outpatient and affected by device
h. Newly covered codes
i. Pass-through requests for drugs
2. Inpatient Procedures List Update
3. Wage Index Adjustment
4. Conversion Factor Update
IV. Waiver of Notice of Proposed Rulemaking
V. Collection of Information Requirements
VI. Regulatory Impact
A. General
B. Analysis for Changes in this Interim Final Rule with Comment Period
C. Federalism
D. Executive Order 12866 and 5 U.S.C. 804(2) Regulation Text
Addenda
Note to the Addenda
Addendum A—List of Hospital Outpatient Ambulatory Payment Classifications with Status Indicators, Relative Weights, Payment Rates, and Coinsurance Amounts—Calendar Year 2001
Addendum B—Hospital Outpatient Department (HOPD) Payment Status by HCPCS Code and Related Information—Calendar Year 2001
Addendum C—[Reserved]
Addendum D—Status Indicators: How Various Services Are Treated under the Hospital Outpatient Prospective Payment System
Addendum E—CPT Codes Which Will Be Paid Only As Inpatient Procedures—Calendar Year 2001
Addendum F—Wage Index for Urban Areas
Addendum G—Wage Index for Rural Areas
Addendum H—Wage Index for Hospitals That Are Reclassified

Alphabetical List of Acronyms Appearing in the Interim Final Rule With Comment Period

APC Ambulatory payment classification
APG Ambulatory patient group
ASC Ambulatory surgical center
AWP Average wholesale price
BBA 1997 Balanced Budget Act of 1997
BBRA 1999 Balanced Budget Refinement Act of 1999
CAT Computerized axial tomography
CCI [HCFA's] Correct Coding Initiative
CCR Cost center specific cost-to-charge ratio
CMHC Community mental health center
CORF Comprehensive outpatient rehabilitation facility
CPI Consumer Price Index
CPT [Physicians'] Current Procedural Terminology, 4th Edition, 2000, copyrighted by the American Medical Association
DME Durable medical equipment
DMEPOS DME, prosthetics (which include prosthetic devices and implants) orthotics, and supplies
DRG Diagnosis-related group
FDA Food and Drug Administration
FQHC Federally qualified health center
HCPCS HCFA Common Procedure Coding System
HHA Home health agency
ICD–9–CM International Classification of Diseases, Ninth Edition, Clinical Modification
IME Indirect medical education
JCAHO Joint Commission on Accreditation of Healthcare Organizations
MRI Magnetic resonance imaging
MSA Metropolitan statistical area
NECMA New England County Metropolitan Area
PPS Prospective payment system
RFA Regulatory Flexibility Act
RHC Rural health clinic
RRC Rural referral center
SCH Sole community hospital
SNF Skilled nursing facility

I. Background

A. General Summary of April 7, 2000 Final Rule With Comment Period That Implemented Amendments Enacted by the Balanced Budget Act of 1997 and the Balanced Budget Refinement Act of 1999

On April 7, 2000, we published in the FEDERAL REGISTER (65 FR 18434) a final rule with comment period to implement a new prospective payment system for hospital outpatient services. This new system establishes prospective payment rates for covered outpatient hospital services using ambulatory payment classification (APC) groups. The April 7, 2000 final rule with comment period implemented section 4523 of the Balanced Budget Act of 1997 (the BBA 1997), Public Law 105–33, and related sections of the Balanced Budget Refinement Act of 1999 (the BBRA 1999), Public Law 106–113. Section 4523 of the BBA 1997 amended section 1833 of the Social Security Act (the Act) by adding subsection (t) to provide for implementation of a prospective payment system for hospital outpatient services furnished to Medicare beneficiaries. Section 1833(t) of the Act, as added by the BBA 1997—

- Authorizes the Secretary to designate the hospital outpatient services that would be paid under the prospective payment system and requires that the hospital outpatient prospective payment system include hospital inpatient services designated by the Secretary that are covered under Medicare Part B for beneficiaries who are entitled to Part A benefits but who have exhausted them or are otherwise entitled to them.
- Sets forth certain requirements for the hospital outpatient prospective payment system, including the requirement that a classification system for covered outpatient services be developed that may consist of groups arranged so that the services within each group are comparable clinically and with respect to the use of resources.
- Specifies data requirements for establishing relative payment weights. The weights are to be based on the median hospital costs determined by 1996 claims data and data from the most recent available cost reports. (This provision has subsequently been changed by the BBRA 1999, as discussed later in this preamble.)
- Requires that the portion of the Medicare payment and the beneficiary coinsurance that are attributable to labor and labor-related costs be adjusted for geographic wage differences in a budget neutral manner.
- Authorizes the Secretary under section 1833(t)(2)(E) of the Act to establish, in a budget neutral manner, other adjustments, such as outlier adjustments or adjustments for certain classes of hospitals, that the Secretary determines to be necessary to ensure equitable payments.
- Requires the Secretary to develop a method for controlling unnecessary

increases in the volume of covered outpatient services.

• Specifies how beneficiary deductibles are to be treated when calculating the Medicare payment and beneficiary coinsurance amounts and requires that rules be established regarding determination of coinsurance amounts for covered services that were not furnished in 1996. The statute freezes beneficiary coinsurance at 20 percent of the national median charges for covered services (or a group of covered services) furnished during 1996 and updated to 1999 using the Secretary's estimated charge growth from 1996 to 1999.

• Prescribes the formula for calculating the initial conversion factor used to determine 1999 Medicare payment amounts and the method for updating the conversion factor in subsequent years.

• Describes the method for determining the Medicare payment amount and the beneficiary coinsurance amount for services covered under the outpatient prospective payment system. (This section was amended by the BBRA 1999, as discussed later in this preamble.)

• Requires the Secretary to establish a procedure whereby hospitals may voluntarily elect to reduce beneficiary copayment for some or all covered services to an amount no less than 20 percent of the Medicare payment amount. Hospitals are further allowed to disseminate information on any such reductions of copayment amounts. Section 4451 of the BBA 1997 added section 1861(v)(1)(T) to the Act, which provides that any reduction in copayment, must not be treated as a bad debt.

• Authorizes periodic review and revision of the payment groups, relative payment weights, wage index, and conversion factor. (This section was amended by the BBRA 1999, as discussed later in this preamble.)

• Describes how payment is to be made for ambulance services, which are specifically excluded from the hospital outpatient prospective payment system under section 1833(t)(1)(B) of the Act.

• Provides that the Secretary may establish a separate conversion factor for services furnished by cancer hospitals that are excluded from the hospital inpatient prospective payment system.

• Prohibits administrative or judicial review of the hospital outpatient prospective payment system classification system, the payment groups, relative payment weights, wage adjustment factors, other adjustments, calculation of base amounts, periodic adjustments, and the establishment of a separate conversion factor for those cancer hospitals excluded from hospital inpatient prospective payment system. (This section was expanded by the BBRA 1999, as discussed later in this preamble.)

Section 4523(d) of the BBA 1997 made a conforming amendment to section 1833(a)(2)(B) of the Act to provide for payment under the hospital outpatient prospective payment system for some services described in section 1832(a)(2) of the Act that are currently paid on a cost basis and furnished by providers of services, such as comprehensive outpatient rehabilitation facilities (CORFs), home health agencies (HHAs), hospices, and community mental health centers (CMHCs). This amendment provides that partial hospitalization services furnished by CMHCs be paid under the hospital outpatient prospective payment system.

Before enactment of section 4521(b) of the BBA 1997, the blended payment formulas for ambulatory surgery centers (ASC) procedures, radiology, and other diagnostic services, the ASC or physician fee schedule portion were calculated as if the beneficiary paid 20 percent of the ASC rate or physician fee schedule amount instead of the actual amount paid, which was 20 percent of the hospital's billed charges. Section 4521(b) of the BBA 1997, which amended sections 1833(i)(3)(B)(i)(II) and 1833(n)(1)(B)(i) of the Act, corrected this anomaly by changing the blended calculations so that all amounts paid by the beneficiary are subtracted from the total payment in the calculation to determine the amount due from the program. Effective for services furnished on or after October 1, 1997, payment for ASC surgery, radiology, and other diagnostic services calculated by blended payment methods is now calculated by subtracting the full amount of coinsurance due from the beneficiary (based on 20 percent of the hospital's billed charges).

Section 1861(v)(1)(S)(ii) of the Act was amended by section 4522 of the BBA 1997 to require that the amounts otherwise payable for hospital outpatient operating costs and capital costs be reduced by 5.8 percent and 10 percent, respectively, through December 31, 1999. (This section was further amended by the BBRA 1999.)

(Refer to the April 7, 2000 hospital outpatient prospective payment system final rule with comment period for a more in-depth description of how the changes made by the BBA 1997 and the BBRA 1999 were implemented.)

On November 29, 1999, after we had published a proposed rule to implement section 4253 of the BBA 1997, the BBRA 1999 was enacted. The BBRA 1999 made major changes that affected the hospital outpatient prospective payment system that was established by the BBA 1997 and implemented in the April 7, 2000 final rule with comment period. Therefore, in the April 7, 2000 final rule with comment period, we also implemented 14 provisions of the BBRA 1999 that affected the hospital outpatient prospective payment system and solicited public comments on those provisions. The BBRA 1999 provisions on which we solicited comments included the following:

1. Outlier Adjustment

Section 201(a) of the BBRA 1999 amended section 1833(t) of the Act by adding a new paragraph (5) to provide that the Secretary must make payment adjustments (that is, an outlier payment) for covered services whose costs exceed a threshold determined by the Secretary. This section describes how the additional payments are to be calculated and caps the projected outlier payments at no more than 2.5 percent of the total projected payments (sum of both Medicare and beneficiary payments to the hospital) made under the hospital outpatient prospective payment system for years before 2004 and 3.0 percent of the total projected payments for 2004 and subsequent years.

2. Transitional Pass-Through for Additional Costs of Innovative Medical Devices, Drugs, and Biologicals

Section 201(b) of the BBRA 1999 added new section 1833(t)(6) to the Act, establishing transitional pass-through payments for certain medical devices, drugs, and biologicals. This provision specifies the types of items for which additional payments must be made; describes the amount of the additional payments; limits these payments to at least 2, but not more than 3 years; and caps the projected payment adjustments annually at 2.5 percent of the total projected payments for hospital outpatient services each year before 2004 and no more than 2.0 percent in subsequent years. Under this provision, the Secretary must reduce pro rata the amount of the additional payments if, before the beginning of a year, he or she estimates that these payments would otherwise exceed the caps.

3. Budget Neutrality Applied to New Adjustments

Section 201(c) of the BBRA 1999 amended section 1833(t)(2)(E) of the Act to require that the establishment of outlier and transitional pass-through payment adjustments be made in a budget neutral manner.

4. Limitation on Judicial Review

Section 201(d) of the BBRA 1999 amended redesignated section 1833(t)(11) of the Act by extending the prohibition of administrative or judicial review to include the factors for determining outlier payments (that is, the fixed multiple, or a fixed dollar cutoff amount, the marginal cost of care, or applicable total payment percentage), and the determination of additional payments for certain medical devices, drugs, and biologicals, the insignificant cost determination for these items, the duration of the additional payment or portion of the prospective payment system payment amount associated with particular devices, drugs, or biologicals, and any pro rata reduction.

5. Inclusion in the Hospital Outpatient Prospective Payment System of Certain Implantable Items

Section 201(e) of the BBRA 1999 amended section 1833(t)(1)(B) of the Act to include as covered hospital outpatient services implantable prosthetics, durable medical equipment (DME), diagnostic x-ray, laboratory, and other tests associated with those implantable items.

6. Payment Weights Based on Median or Mean Hospital Costs

Section 201(f) of the BBRA 1999 amended section 1833(t)(2)(C) of the Act, which specifies data requirements for establishing relative payment weights, to allow the Secretary the discretion to base the weights on either the median or mean hospital costs determined by data from the most recent available cost reports.

7. Limitation on Variation of Costs of Services Classified Within a Group

Section 201(g) of the BBRA 1999 amended section 1833(t)(2) of the Act to limit the variation of costs of services within each payment classification group by providing that the highest median cost (or mean cost, if elected by the Secretary) for an item or service within the group cannot be more than 2 times greater than the lowest median (or mean) cost for an item or service within the group. The provision allows the Secretary to make exceptions in unusual cases, such as for low volume items and services.

8. Annual Review of the Hospital Outpatient Prospective Payment System Components

Section 201(h) of the BBRA 1999 amended redesignated section 1833(t)(8) of the Act to require at least an annual review of the payment groups, relative payment weights, and the wage and other adjustments made by the Secretary to take into account changes in medical practice, the addition of new services, new cost data, and other relevant information and factors. Section 201(h)(2) provides that the first annual review must be conducted in 2001 for application in 2002. The section was further amended to require the Secretary to consult with an expert outside advisory panel composed of an appropriate selection of provider representatives who will review the clinical integrity of the groups and weights and advise the Secretary accordingly. The panel may use data other than those collected or developed by the Department of Health and Human Services (HHS) for review and advisory purposes.

9. Coinsurance Not Affected by Pass-Throughs

Section 201(i) of the BBRA 1999 amended redesignated section 1833(t)(7) of the Act to provide that the beneficiary coinsurance amount will be calculated as if the outlier and transitional pass-throughs had not occurred; that is, there will be no additional coinsurance collected from beneficiaries for the additional payments made to hospitals by Medicare for these adjustments.

10. Extension of Cost Reductions

Section 201(k) of the BBRA 1999 amended section 1861(v)(1)(S)(ii) of the Act to extend, until the first date that the hospital outpatient prospective payment system is implemented, the 5.8 and 10 percent reductions for hospital operating and capital costs, respectively.

11. Clarification of Congressional Intent Regarding Base Amounts Used in Determining the Hospital Outpatient Prospective Payment System

Section 201(l) of the BBRA 1999 provided that, ''With respect to determining the amount of copayments described in paragraph (3)(A)(ii) of section 1833(t) of the Social Security Act, as added by section 4523(a) of BBA, Congress finds that such amount should be determined without regard to such section, in a budget neutral manner with respect to aggregate payments to hospitals, and that the Secretary of Health and Human Services has the authority to determine such amount without regard to such section.''

12. Transitional Corridors for Application of Outpatient Prospective Payment System

Section 202 of the BBRA 1999 amended section 1833(t) of the Act by redesignating paragraphs (7) through (11) as paragraphs (8) through (12), respectively, and adding a new paragraph (7), which provides for a transitional adjustment to limit payment reductions under the hospital outpatient prospective payment system. More specifically, from the date the prospective payment system is implemented through 2003, a provider, including a CMHC, will receive an adjustment if its prospective payment system payments for outpatient services furnished during the year is less than a set percentage of its ''pre-BBA'' amount for that year. The pre-BBA amount is the product of the reasonable costs the hospital incurs for prospective payment system services during the year and the payment-to-cost ratio for covered prospective payment system services furnished during the cost report period ending during 1996. Two categories of hospitals, rural hospitals with 100 or fewer beds and cancer hospitals, will be held harmless under this provision. Small rural hospitals will be held harmless for services furnished before January 1, 2004. The hold-harmless provision applies permanently to cancer centers. Section 202 also requires the Secretary to make interim payments to affected hospitals subject to retrospective adjustments and requires that the provisions of this section do not affect beneficiary coinsurance. Finally, this provision is not subject to budget neutrality.

13. Limitation on Coinsurance for a Procedure

Section 204 of the BBRA 1999 amended redesignated section 1833(t)(8) of the Act to provide that the copayment amount for a procedure performed in a year cannot exceed the hospital inpatient deductible for that year.

14. Reclassification of Certain Hospitals

Section 401 of the BBRA 1999 added section 1886(d)(8)(E) to the Act to permit reclassification of certain urban hospitals as rural hospitals for purposes of section 1886(d) of the Act. Section 401 added section 1833(t)(13) to the Act to provide that a hospital being treated as a rural hospital under section 1886(d)(8)(E) is also to be treated as a rural hospital under the hospital outpatient prospective payment system.

A discussion of how each of these BBRA 1999 provisions was implemented in the April 7, 2000 final rule with comment period appears in section II of this preamble preceding our summary of the public comments received and our responses to those comments.

B. June 30, 2000 Notice of Delay of Effective Date for the April 7, 2000 Final Rule With Comment Period

On June 30, 2000, we published a notice in the **Federal Register** (65 FR 40535) announcing a delay in the effective date of the April 7, 2000 hospital outpatient prospective payment system final rule with comment period from July 1, 2000 to August 1, 2000. This delay was based on our determination that the appropriate claims processing changes could not feasibly be made to our computer systems and properly tested in time to ensure that proper payments would be made for Medicare hospital outpatient services under the new prospective payment system by the original July 1, 2000 effective date.

C. August 3, 2000 Interim Final Rule With Comment Period

On August 3, 2000, we published an interim final rule with comment period in the **Federal Register** (65 FR 47670) that changed one criterion and postponed the effective date for two other criteria that a new device, drug, or biological must meet in order for its cost to be considered ''not insignificant'' for purposes of determining its eligibility for transitional pass-through payments from the hospital outpatient prospective payment system. It also changed the transitional pass-through payment policy to include new single use medical devices that come in contact with human tissue and are surgically implanted or inserted into patients, whether or not the devices remain with the patients following their release. These policies were a departure from those presented in the April 7, 2000 final rule with comment period.

The August 3, 2000 rule also corrected a trigger date for grandfathering of provider-based FQHCs to conform with the intent not to disrupt existing FQHCs with longstanding provider-based treatment that we discussed in the April 7, 2000 rule. Under the criteria in the April 7, 2000 final rule with comment period, FQHCs would have been treated as departments of a provider without regard to the criteria for provider-based status if they continued to qualify as FQHCs and were designated as FQHCs before 1995. In accordance with the August 3, 2000 interim final rule with comment period and this interim final rule with comment period, facilities that continue to qualify as FQHCs and were designated as FQHCs or ''look-alikes'' on or before April 7, 2000 would continue to be treated as provider-based facilities. In addition, we clarified how the requirement for prior notices to beneficiaries is to be applied in emergency situations. We also clarified the protocols for off-campus departments in emergency situations.

D. Summary of This Interim Final Rule With Comment Period

In section II of this preamble, we—

- Respond to public comments received timely on the 14 BBRA 1999 provisions that were included in the April 7, 2000 final rule with comment period. (We received numerous public comments on other aspects of the April 7, 2000 final rule with comment period that were not open for comment. We will not address those comments in this rule.)
- Respond to public comments on the August 3, 2000 interim final rule with comment period that revised the criteria for defining new or innovative medical devices, drugs, and biologicals eligible for pass-through payments and corrected the criteria for the grandfathering provision for certain FQHCs as provider-based.

In section III of this preamble, we are updating, for services furnished during calendar year 2001, the wage index values and the conversion factor, and revising the APCs to reflect new codes for 2001 effective January 1, 2001. As required under section 1833(t)(8)(A) of the Act, in 2001, we will begin our annual review process of the APC groups, relative weights, and the wage and other adjustments for the prospective payment systems payments that will become effective on January 1, 2002. The statute requires the Secretary to consult with an expert outside advisory panel composed of an appropriate selection of representatives of providers to review (and advise the Secretary concerning) the clinical integrity of the groups and weights. This provision allows these experts to use data other than those collected or developed by us during our review of the APC groups and weights.

II. Analysis of, and Responses to, Public Comments on the BBRA 1999 Provisions and the August 3, 2000 Interim Final Rule With Comment Period

We received a total of 747 pieces of timely correspondence containing public comments on the April 7, 2000 final rule with comment period. In addition to receiving comments from various organizations throughout the hospital industry, we also received comments from beneficiaries and their families, physicians, health care workers, individual hospitals, professional associations and societies, legal and nonlegal representatives and spokespersons for beneficiaries and hospitals, members of the Congress, and other interested citizens. The majority of the comments addressed the BBRA 1999 provisions relating to the limitation on variation of costs of services classified within a group, the transitional pass-through provision for devices, drugs, and biologicals, and the inclusion of implantable items.

We received 13 comments in response to the August 3, 2000 interim final rule with comment period. These comments were submitted by major associations, drug and device manufacturers, providers, a private citizen, and a law firm. More than half of the comments addressed issues for which we did not solicit comments in the August 3, 2000 interim final rule with comment period. Those comments specifically addressed payment policy and typographical errors present in the April 7, 2000 final rule with comment period. The remaining commenters addressed the revisions to the criteria to define new or innovative medical devices, drugs, and biologicals eligible for pass-through payments and corrections to the criteria for the grandfathering provision for certain FQHCs. These commenters took issue with some of the provisions and raised additional concerns regarding our actions. A summary of the public comments and our responses to them appears following the discussion of the April 7, 2000 final rule with comment period.

We have carefully reviewed and considered all comments received timely. The modifications that we are making in response to commenters' suggestions and recommendations are summarized in section III.A of this preamble and, as appropriate, reflected in the regulation text.

A. April 7, 2000 BBRA 1999 Provisions

Below we discuss the implementation of the BBRA 1999 provisions addressed in the April 7, 2000 final rule with comment period and modified in the August 3, 2000 interim final rule with comment period, the public comments received on each provision, and our response to those comments.

1. Outlier Adjustment

Section 1833(t)(5) of the Act, as added by section 201(a) of the BBRA 1999, required that the Secretary make an additional payment (that is, an outlier adjustment) for outpatient services for which a hospital's charges, adjusted to cost, exceed a fixed multiple of the sum of the outpatient prospective payment system payment and the transitional pass-through payments. The Secretary is

authorized to determine the amount of this fixed multiple and the percent of costs above the threshold that is to be paid under this outlier provision. Under the statute, projected outlier payments may not exceed an ''applicable percentage'' of projected total program payments. The applicable percentage means a percentage specified by the Secretary (projected percentage of outlier payments relative to total payments), subject to the following limits: For years before 2004, the projected percentage that the Secretary specifies cannot exceed 2.5 percent; for 2004 and later, the projected percentage cannot exceed 3.0 percent. Section 1833(t)(2)(E) of the Act requires that these payments be budget neutral.

Section 1833(t)(5)(D) of the Act grants the Secretary authority until 2002 to identify outliers on a bill basis rather than on a specific service basis and to use an overall hospital cost-to-charge ratio (CCR) to calculate costs on the bill rather than using department-specific CCRs for each hospital.

In the April 7, 2000 final rule with comment period, in accordance with the statute, we presented how the additional outlier payments are to be calculated.

To set the threshold or fixed multiple and the payment percentage of costs above that multiple for which an outlier payment would be made, we first had to determine what specified percentage of total program payment, up to 2.5 percent, we should select. We decided to set the outlier target at 2.0 percent. In order to set the fixed multiple outlier threshold and payment percentage, we simulated the prospective payment system payments. We calibrated the threshold and the payment percentage applying an iterative process so that the simulated outlier payments were 2.5 percent of simulated total payments. For purposes of the simulation, we set a ''target'' of 2.5 percent (rather than 2.0 percent), because we believed that a given set of numerical criteria would result in a higher percentage of outlier payments under the simulation using 1996 data than under the prospective payment system. This is because we believe that the 1996 data reflects undercoding of services, which means simulated total payments would likely be understated and, in turn, the percentage of outlier payments would be overstated. In addition, we were not able to fully estimate the amount and distribution of pass-through payments using the 1996 data. Our inability to make these estimates further understated the total payments under the simulation. We believe that a set of numerical criteria that results in simulated outlier payments of 2.5 percent using the 1996 data would result in outlier payments of 2.0 percent under the prospective payment system. The difference arises from the effect of undercoding in the historical data and the payment of pass-throughs under prospective payment system. We set the outlier threshold at 2.5 times the prospective payment system payments.

Comment: Several commenters asked us to clarify how series bills for services such as chemotherapy that are billed monthly for multiple sessions are treated in determining outlier payments. They also asked that we clarify how bills for multiple clinic visits on the same day are treated in calculating the outlier payment.

Response: In accordance with section 1833(t)(5)(D) of the Act, until 2002, outliers will be determined on a bill basis rather than on a specific service basis. Therefore, the charges (converted to costs) associated with all services under the hospital outpatient prospective payment system reported on series bills or all payable multiple clinic visits billed on a single claim would be used to determine whether the outlier threshold is exceeded and to calculate the outlier payment.

Comment: One commenter suggested that we prospectively adjust the conversion factor if we determine that the actual outlier expenditures are less than estimated in a given year.

Response: Consistent with our outlier policies in other prospective payment systems, we will not adjust the conversion factor for a given year to account for an underestimation (or overestimation) of outlier payments in a previous year. The statute does not provide for such an adjustment to the conversion factor. We set outlier policies prospectively, using the best available data. Outlier payments, like many aspects of a prospective payment system, reflect estimates, and we believe it would be inappropriate to adjust the conversion factor (upward or downward) for a given year simply because an estimate for a previous year ultimately turned out to be inaccurate. If we underestimate or overestimate the percentage of outlier payments, the divergence of our estimate from actual experience might provide information that might help us improve estimates in the future, but it would have no direct effect on the conversion factor for any following year.

Comment: One commenter urged us to provide additional information about the cost-to-charge ratios that will be used to determine whether a claim exceeds the outlier threshold for payment. The commenter stated that the preamble language on page 18498 of our April 7, 2000 final rule with comment period conflicts with statements contained in Program Memorandum Transmittal No. A–00–23 regarding which cost-to-charge ratio would be used to determine whether a claim meets the outlier threshold requirements for payment. According to the commenter, we stated in the final rule with comment period that we will use a hospital's overall cost-to-charge ratio to make this determination, but stated in the program memorandum that we will use an outpatient cost-to-charge ratio. The commenter asked us to clarify the conflicting statements.

Response: On September 8, 2000, we issued Program Memorandum Transmittal No. A–00–63, titled ''Cost-to-Charge Ratios (CCRs) for Calculating Certain Payments Under the Hospital Outpatient Prospective Payment System'' which describes how we calculated the cost-to-charge ratios that are used to determine payments for outliers, interim transitional corridors, and device pass-throughs for calendar year 2000. That program memorandum defined the cost-to-charge ratio that is used to calculate these payments as the overall hospital outpatient cost-to-charge ratio. This is consistent with what we stated in our April 7, 2000 final rule with comment period. The September program memorandum contains the latest and most complete information available on cost-to-charge ratio calculation for the hospital outpatient prospective payment system.

Comment: One commenter assumed that we will use department level cost-to-charge ratios after 2002 to determine if a particular outpatient service qualifies for outlier payment. The commenter asked if we will use a ''national cost-to-charge mapping procedure'' to determine the appropriate department cost-to-charge ratios to use. The commenter expressed concern about the appropriateness of that approach because of the variability among providers in assigning costs to departments. For this reason, the commenter recommended, if we use a national cost-to-charge mapping procedure, we permit providers to request outlier payments if they can demonstrate that the actual department cost-to-charge ratio to which they assign costs for a service results in a cost calculation that meets the outlier threshold.

Response: We plan to address this issue and seek comments on it in the rulemaking process for the annual update for 2002.

Comment: One commenter urged us to publish annually the ''cost reporting

year'' used to determine the cost-to-charge ratios that will be used in determining outlier payments. The commenter also asked that we explain how we computed cost-to-charge ratios for hospitals that have merged or been acquired.

Response: On September 8, 2000, we issued Program Memorandum Transmittal No. A–00–63 that describes the specific criteria we used and provides detailed instructions for calculating the cost-to-charge ratios for hospitals that have merged or been acquired. It also identifies the specific cost reporting year end that was used to calculate each provider's cost-to-charge ratio.

Comment: One commenter asked that we lower the outlier threshold from 2.5 to 2.0. The commenter strongly recommended that we permanently retain the lowered threshold to ensure appropriate patient care and adequate provider reimbursement.

Response: We oppose lowering the outlier threshold to 2.0. As discussed in our April 7, 2000 final rule with comment period, we set the outlier threshold at 2.5 by simulating total prospective payment system payments (using 1996 hospital outpatient data) and using an iterative process to calculate a threshold under which outlier payments are projected to equal 2.0 percent of total payments. If we lowered the threshold as the commenter suggests, then the projected percentage of outlier payments would increase and we would have to reduce the conversion factor correspondingly (thus reducing the payment for all non-outlier cases.)

2. Transitional Pass-Through for Additional Costs of Innovative Medical Devices, Drugs, and Biologicals

Section 1833(t)(6) of the Act, as added by section 201(b) of the BBRA 1999, requires the Secretary to make additional payments to hospitals, outside the hospital outpatient prospective payment system for a period of 2 to 3 years for specific items. The items designated by the law are the following: Current orphan drugs, as designated under section 526 of the Federal Food, Drug, and Cosmetic Act; current drugs, biologic agents, and brachytherapy devices used for treatment of cancer; current radiopharmaceutical drugs and biological products; and new medical devices, drugs, and biologic agents, in instances where the item was not being paid as a hospital outpatient service as of December 31, 1996, and where the cost of the item is ''not insignificant'' in relation to the hospital outpatient prospective payment system payment amount. In this context, ''current'' refers to those items for which hospital outpatient payment is being made on the first date the new prospective payment system is implemented.

Section 1833(t)(6)(C)(i) of the Act sets the additional payment amounts for the drugs and biologicals as the amount by which the amount determined under section 1842(o) of the Act (95 percent of the average wholesale price (AWP)) exceeds the portion of the otherwise applicable hospital outpatient department fee schedule amount that the Secretary determines to be associated with the drug or biological. Section 1833(t)(6)(C)(ii) of the Act provides that the additional payment for medical devices be the amount by which the hospital's charges for the device, adjusted to cost, exceed the portion of the otherwise applicable hospital outpatient department fee schedule amount determined by the Secretary to be associated with the device. Under section 1833(t)(6)(D), the total amount of pass-through payments for a given year cannot be projected to exceed an ''applicable percentage'' of total payments. For a year (or a portion of a year) before 2004, the applicable percentage is 2.5 percent; for 2004 and subsequent years, the applicable percentage is 2.0 percent. If the Secretary estimates that total pass-through payments would exceed the caps, the statute requires the Secretary to reduce the additional payments uniformly to ensure the ceiling is not exceeded.

These pass-through payments must be made in a budget neutral manner. In addition, these additional payments do not affect the computation of the beneficiary coinsurance amount.

In the April 7, 2000 final rule with comment period, we specified the types of items for which additional payments would be made; described the amount of the additional payments; announced that these payments would be limited to at least 2 years but not more than 3 years; and announced a cap of the projected payment adjustments annually at 2.5 percent of the total projected payments for hospital outpatient services each year before 2004 and no more than 2.0 percent in subsequent years.

a. Definition of a Device

Comment: Some commenters argued that we have adopted a very narrow definition of a device that restricts pass-through payments to prosthetic devices and excludes valuable new nonprosthetics from pass-through consideration. They asserted that the definition of a device should mirror the definition set forth in the Federal Food, Drug, and Cosmetic Act. They agreed that such a definition should exclude capital equipment, reusable items, and incidental supplies. However, they argued that we should clarify and revise our definition of devices to those that are ''implanted or inserted'' and ''remain with the patient after the patient is released from the hospital outpatient department.''

Response: The definition of a device under the Food, Drug, and Cosmetic Act is extremely broad. In summary, it refers to a device as an instrument, apparatus, implement, machine, contrivance, implant, *in vitro* reagent, or other similar or related article, including any component, part, or accessory, which is—

- Recognized in the official national formulary, or the U.S. Pharmacopeia, or any supplement to them;
- Intended for the use of the diagnosis of conditions other than diseases such as pregnancy;
- Intended to affect the structure or any function of the body of man or other animals; or
- Considered an *in vitro* diagnostic product, including those previously regulated as drugs, and which does not achieve any of its principal intended purposes through chemical action within or on the body of man or other animals and which is not dependent upon being metabolized for the achievement of any of its principal intended purposes.

This definition is inappropriate for use in the context of the transitional pass-through payments for several reasons: It would include (as the commenters noted) items that are treated as supplies, reusable items, or capital equipment by Medicare payment systems, including the outpatient prospective payment system. It has a number of inappropriate elements, including reference to pharmaceuticals and to use in animals. Further, it is insufficiently specific for Medicare purposes, as it does not mention medical necessity or the test of whether the cost of a device is ''not insignificant'' relative to the associated APC.

We have instead provided a definition of a device specific to the purposes of the transitional pass-through provision. This definition was presented in the preamble to the April 7, 2000 final rule with comment period and revised in the August 3, 2000 interim final rule with comment period, which added § 413.43(e)(4).

In the August 3, 2000 interim final rule with comment period, we revised the criteria that we had set forth in the

April 7, 2000 final rule with comment period to define a device. Among the changes included is a revision of the criterion relating to whether a device must remain with the patient. The new criterion (§ 419.43(e)(4)(iv)) includes devices that are surgically implanted or inserted in a patient ''whether or not they remain with the patient when the patient is released from the hospital outpatient department.'' This change allows pass-through payments for devices that are surgically implanted or inserted even temporarily in a patient providing the devices meet all other requirements for pass-through payments. As a result, nonprosthetic devices, such as cardiac catheters, guidewires, or stents that commenters noted would be excluded, may be eligible for pass-through status.

In § 419.43(e)(4)(iv), we have retained the limitation to devices that are surgically implanted or inserted because we believe this offers the best interpretation of section 201(e) of the BBRA 1999, which indicates that implantable devices are to be included in the APCs. To further clarify how we interpret § 419.43(e)(4)(iv), we consider that a device is surgically implanted or inserted if it is introduced into the human body through a surgically created incision. We do not consider an item used to cut or otherwise create a surgical opening to be a device that is surgically implanted or inserted. We consider items used to create incisions, such as scalpels, electrocautery units, biopsy apparatuses, or other commonly used operating room instruments, to be supplies or capital equipment, and hence, in accordance with § 419.43(e)(4)(vi) or (vii), we consider these items not eligible for transitional pass-through payments. We believe the function of these items is different and distinct from that of devices that are used for surgical implantation or insertion. Generally, we would expect that surgical implantation or insertion of a device occurs after the surgeon uses certain primary tools, supplies, or instruments to create the surgical path or site for implanting the device.

We have discovered some items that do not meet the requirement of being surgically implanted or inserted were erroneously approved for pass-through payments. Consequently, we will eliminate these items from the list of items eligible for pass-through payments, effective January 1, 2001.

Comment: One commenter claimed that it was inappropriate for us to change the definition of devices through letters to manufacturers. The commenter believed that this was done outside the rulemaking process.

Response: We did not make a change to our policy through a letter. As we began to evaluate the hundreds of applications for approval of numerous devices, it was apparent that our definition for new medical devices as published in our April 7, 2000 final rule with comment period would have resulted in denials for items that we believe might warrant pass-through payments. Examples of such potential denials are many types of general and specialty catheters. Based on our experience in reviewing these applications, we decided to change three of the eight specific criteria that a new device must meet in order to be eligible for pass-through payments. We published these changes in our August 3, 2000 interim final rule with comment period.

b. Eligibility Criteria

Comment: Some commenters believed that we should accept and process applications for items while they are undergoing the FDA review process.

Response: We have accepted and begun processing all applications, including those for which items are pending FDA approval or clearance. However, in those instances where the FDA approval or clearance documentation is missing, the application is considered incomplete. In order for an item to be eligible for transitional pass-through payments, it must have been approved or cleared by the FDA for marketing. We will not make a final determination on any applications that are pending FDA approval or clearance until all the required documentation is submitted. Resources permitting, we will commence preliminary processing of the applications when received. The applying party is responsible for providing us with proper evidence of FDA approval or clearance for any item, once approval or clearance has been obtained. Once we receive documentation of FDA approval or clearance and determine the item is determined to be eligible for transitional pass-through payments, payment for the item will commence at the start of the next quarterly update of pass-through items.

Comment: Some commenters asked that we clarify that items must meet Medicare coverage requirements in order to qualify for pass-through status.

Response: As stated in both our April 7, 2000 final rule with comment period and our August 3, 2000 interim final rule with comment, items that qualify for pass-through payments must be covered by Medicare. They must have been determined to be reasonable and necessary for the diagnosis or treatment of an illness or injury or to improve the functioning of a malformed body part, as required by section 1862(a)(1)(A) of the Act. (See § 419.43(e)(4)(iii).)

c. Investigational Device Exemption (IDE) Devices

Comment: Some commenters recommended that we automatically define as ''new'' any device that receives an investigational device exemption (IDE) from the FDA, with a Category B designation. They believed that we should pay for IDE devices through the pass-through payment methodology rather than limit the payment to no more than what is currently paid for an equivalent device.

Response: As stated in our August 3, 2000 interim final rule with comment period, we have changed the payment methodology for eligible IDE Category B devices so that they will be paid using the transitional pass-through methodology. Since these noninvestigational devices are required to meet the same eligibility criteria as other devices, we determined that they should be paid in a similar manner. However, we do not accept the commenter's recommendation that all IDE Category B devices ''automatically'' be considered as new. The statute defines ''new'' medical device on the basis of a date certain (that is, payment for the device was not being made as an hospital outpatient service as of December 31, 1996) rather than based on a class of devices (such as IDEs).

d. Removing Cost of Predicate Item

Comment: Some commenters stated that we did not have adequate data to ensure appropriate removal of the costs for predecessor items (particularly radiopharmaceuticals and devices) from their relevant APCs. They advocated that we reevaluate this provision as soon as possible after implementation of our new system and make necessary changes.

Response: We will be continuously evaluating our data to remove the costs of predecessor items from the pass-through payments. As of January 1, 2001, a specific dollar amount will be deducted from selected devices (see explanation below). Over time, such deductions will be made, as we are able to make appropriate estimates from the data.

e. Excluded Costs

Comment: A number of commenters stated that the APC construction excluded costs for implantable devices billed with revenue codes 274, 275 and 278. The commenters recommended

that implantable devices associated with these revenue codes be included on the pass-through list until data is collected to adequately reflect the cost of such devices. In addition to claims that revenue codes 274, 275 and 278 were not represented in the data, some commenters alleged that implant procedures were infrequently performed on an outpatient basis prior to 1997 and therefore the costs associated with them were not represented in the data used to develop the APC rates. Some commenters recommended, on that basis, that all implantable devices be included for pass-through payment regardless of FDA approval dates.

Response: Following enactment of the BBRA of 1999, we did not have sufficient time to re-run our data to package the costs of implantable device revenue centers into the APC weights and still be able to publish a final rule in time to implement the prospective payment system by July 1, 2000.

As of January 1, 2001, the APC rates will reflect the inclusion of revenue codes 274, 275 and 278. While the aggregate amount of these revenue centers is small (0.3 percent of total charges in 1996), the costs of certain procedures such as implantation of cardiac pacemakers did increase substantially. As detailed in section III.B.1 of this interim final rule, some APC groups were modified because of the inclusion of these revenue centers, and rates for some procedures will increase to reflect these costs. A reduction in an amount equal to the increase in the APC rates will be deducted from the relevant devices that are either eligible for pass-through payments or that can be billed for additional payment through the new technology APCs.

f. Effect on Conversion Factor

Comment: Some commenters believed that lowering the outpatient prospective payment system conversion factor to reflect the 2.5 percent transitional pass-through adjustment could affect hospitals' financial health. They asserted that any risks to the financial health of hospitals resulting from reducing the conversion factor should be balanced against any benefits that would be gained from higher payments for new drugs and devices. Another commenter advocated that we increase the conversion factor if we find that the transitional pass-through payments do not comprise 2.5 percent of the total outpatient prospective payment system payments.

Response: Section 1833(t)(2)(E), as amended by section 201(c) of the BBRA 1999, requires that transitional pass-through payments be implemented in a budget neutral manner. We set prospective payment system rates prospectively and, consistent with our policies in other aspects of the prospective payment system, we will not adjust (upward or downward) the conversion factor for a given year to account for the difference between 2.5 percent and the actual percentage of pass-through payments in a previous year.

g. Cost Significance Tests

Comment: Some commenters asserted that we could preclude some worthwhile technologies from achieving pass-through status if we set the ''not insignificant'' cost threshold at 25 percent of the APC payment rate for the relevant procedure with which it is used. They contend that technologies associated with higher payment APCs would be more likely to be disqualified.

Response: We have lowered the cost threshold from 25 percent to 10 percent of the applicable fee schedule amount for the service associated with the item. This change is effective for services furnished on or after August 1, 2000.

Comment: A hospital association asked that we clarify how the ''not insignificant'' criteria will be applied when a new device, drug, or biological is associated with more than one APC. The commenter stated that, under the current provisions of the rule, an item could be determined to be eligible for pass-through payment when used in performing a procedure in one APC, but not another. The commenter suggested that an item that meets the criteria for one APC be treated as a pass-through item for all APCs in which it is used.

Response: We agree with the stated approach. This has been the policy that we have applied in processing applications.

Comment: One manufacturer stated that we did not make information available on the ''not insignificant'' rule in sufficient time for applicants to take the criteria into account in preparing applications for payment effective August 1, 2000. The commenter alleged that the term ''not insignificant'' can be interpreted widely and caused manufacturers not to apply for all potentially eligible pass-through items. The commenter recommended that we review applications submitted for the following HCPCS codes to be certain that they meet the published cost criteria and remove them from the pass-through list if they do not. The commenter also advocated that we allow other manufacturers to submit applications retroactive to July 1, 2000, to assure that we are not promoting a competitive disadvantage for some companies.

HCPCS Codes

C1029
C1034
C1061
C1072
C1073
C1074
C1100
C1101
C1155

Response: In order for a device to be included on the pass-through list, it must meet the criteria for transitional pass-through payments. These criteria include a test of whether the cost of a device is ''not insignificant'' relative to the payment for the associated APC. This test was first put forth in the April 7, 2000 final rule with comment period, and subsequently revised in the August 3, 2000 interim final rule with comment period. All the devices denoted by the HCPCS codes listed above were tested and met the 10-percent ''not insignificant'' test as well as the other applicable criteria. The ''not insignificant'' test was applied uniformly to all applications that had been received timely. We believe that permitting retroactive applications is unwarranted (and would be inconsistent with principles of prospectivity); moreover, resource and systems constraints would make it infeasible to give retroactive effect to determinations of eligibility for pass-through payments.

h. Brand-Specific Versus Categorization Approaches

Comment: Many commenters criticized us for implementing a brand-specific approach to items on the pass-through list. Device manufacturers in particular recommended a category scheme to classify pass-through devices. Representatives of the device industry also offered to assist us in creating the categories. They argued that a category system would allow devices to be added immediately upon FDA approval. They stated that under a category approach manufacturers would only approach us to obtain new pass-through categories and codes when items reflect a technological advance and are significantly more costly than existing payment amounts.

Response: We adopted a trade-name specific approach for several reasons. First, such an approach provides better information. Codes that are largely item-specific allow us to track what procedures the items are used with and costs of the items. When the pass-through payments for an item ends, we would expect to have good information

for assigning it to relevant APCs and ensuring appropriate payment for these APCs. Adopting a scheme with a significant degree of categorization would require use of averages in making assignments and setting payment rates. Decisions based on these more limited data would be likely to lead to intensified concerns about the appropriateness of APC assignment and payment.

Second, this approach permits finer discrimination in eligibility decisions. An item-by-item approach allows us to be sure individual items in fact meet the criteria for eligibility. Of major concern in this instance is whether a device is ''new'' using the standard of the statute. Section 1833(t)(6)(A) of the Act limits transitional pass-through payment to those devices for which ''* * * payment for the device * * * as an outpatient hospital service under this part was not being made as of December 31, 1996.'' Adopting categories would in some cases mix ''old'' and ''new'' devices. In these instances, either some old devices would get special treatment that they would not be eligible for if they were examined on an item-specific basis, or an entire category could be considered old, thus depriving some new devices from special treatment they would be eligible for if they were examined on an item-specific basis.

Third, an item-specific scheme avoids issues associated with the design of categories needed for purposes of transitional pass-through payments. It largely avoids concerns about what items should be in what category or whether new categories should be created to accommodate items that may appear to be little different from those in existing categories.

Fourth, an item-specific approach allows us to assure that a newly arriving device can obtain the full period of pass-through status it is arguably eligible for under the statute. A categorization approach would likely lead to latecomers being eligible for pass-through payments for a shorter period. Insofar as revision to APC payment rates reflected the costs of items in the category by the time the category was terminated, the shorter period would be of little consequence. However, if the costs of the late-coming item were significantly higher, this procedure could appear objectionable. A solution in this case would be to create a new code, which could be specific to that item, thus departing from a categorization approach.

We recognize that a category approach would lessen concerns about competitive disadvantages that may have been inadvertently created by an item specific approach and about access to specific items by hospitals and their patients. However, we found no satisfactory way of establishing categories that would not run into difficulty regarding the test of whether a device is ''new'' as described above. Consequently, we are making no change in our approach.

Comment: Many commenters argued that competitive advantages have resulted and will continue to result from using a brand-specific approach to implementing transitional pass-through payments for devices. Some commenters alleged that our use of the FDA approval date as a proxy for determining payment in concert with the brand-specific approach causes further competitive disadvantages. Some hospitals claimed that the brand-specific approach would create winners and losers if a device that one hospital uses obtains pass-through status, but one that another hospital uses does not. A number of commenters asserted that a category approach would decrease the administrative burden on hospitals, manufacturers, and us that a brand-specific approach for application and approval of new devices now incurs.

Response: It was never our intent to competitively disadvantage anyone or any product. To the maximum extent possible, given the limitations under the BBRA 1999 and our resource constraints, we have worked closely with the pharmaceutical and medical device industries to identify and resolve such issues. By October 1, 2000, we had determined that more than 700 devices are eligible for pass-through payments. Therefore, we believe that hospitals will receive additional payments for many of the devices they use.

i. Issues Pertaining to Specific Items

Comment: A medical association advocated pass-through status for the following devices: new pacemakers, implantable cardioverter defibrillators, insertable loop recorders, electrophysiology catheters (ablation and diagnostic), intracardiac echocardiography ultrasound catheters, and advanced three-dimensional mapping system catheters.

Response: All of these items are already on the pass-through list. For a complete list of items approved on the pass-through list, refer to Addendum B of this rule for short descriptions of the items. Refer to Program Memoranda Transmittals Nos. A–00–42, A–00–61 and A–00–72 for the long descriptors for each of the C-codes listed in Addendum B. We are developing an additional program memorandum that we expect to issue shortly. This additional program memorandum will contain a list of additional devices, drugs, and new technology services that will be effective January 1, 2001.

Comment: Several device manufacturers alleged that the following devices were not included on the pass-through list:

PALMAZ Balloon-Expandable Stent
Corinthian IQ Biliary Stent
SMART Cordis Nitinol Stent
CARTO EP Navigation System Catheters
HYDROLYSER Catheter
Indigo Prostate Seeding Needle
Lioresal Intrathecal
SynchroMed and SynchroMed EL infusion pumps

Response: All of these devices have been approved for pass-through payments and assigned C-codes. They have been assigned the following codes: the PALMAZ Balloon-Expandable Stent, C8522; Corinthian IQ Biliary Stent, C5004; SMART Cordis Nitinol Stent, C1372; CARTO EP Navigation System Catheters, C1047; HYDROLYSER Catheter, C1054; Indigo Prostate Seeding Needle, C1706; Lioresal Intrathecal, C9007, C9008, C9009, and C9010; SynchroMed and SynchroMed EL infusion pumps, C8505 and C3800, respectively.

Comment: Another device manufacturer claimed that the following devices were not included on the pass-through list:

Mitek Bone Anchors
Innovasive Bone Anchors
VAPR and VAPR Thermal T Electrode
Gynecare TVT Tension-Free Support for Incontinence System (TVT)
Gynecare Thermachoice Uterine Balloon Therapy System

Response: Many of the items above have been approved for pass-through status and assigned C-codes. The Mitek and Innovasive Bone Anchors have been assigned to C1109; VAPR and VAPR Thermal T Electrode, to C1323; TVT Single-Use Tension-Free Vaginal Tape, to C1370; and the Gynecare Thermachoice II Catheter, to C1056. However, some of the items included in the Gynecare TVT Tension-Free Support for Incontinence System and the Gynecare Thermachoice Uterine Balloon Therapy System did not meet the criteria for pass-through status and, therefore, are ineligible for additional payments. The eligible pass-through items are listed in Addendum B.

Comment: A device manufacturer believed that we should have approved the Targis System, which provides prostatic microwave thermotherapy, for pass-through payments.

Response: We assigned the prostatic microwave thermotherapy procedure to

a new technology APC, that is, APC 0980. In making this assignment, we took into account the costs associated with performing this procedure, including the cost of the Targis system. Therefore, we would not also make a pass-through payment for the system.

Comment: A number of commenters contended that only 39 of the more than 70 eligible radiopharmaceuticals have been given pass-through status. They recommended that we approve the following radiopharmaceuticals for pass-through payments:

Strontium Sr 82 Rubidium Rb 82 Generator
Sodium Chromate Cr-51
Co 57 Cobaltous Chloride
Co 57 Cyanocobalamin
Ferrous Citrate Fe59
Fludeoxyglucose F 18
Intrinsic Factor Concentrate Capsules
In 111 Imciromab (Myoscint)
In 111 Labeled WBCs, Platelets
I 123 and I 131 Hippurate
Iodinated I 131 Albumin (I 131 Albumin)
Iodinated I 125 Albumin (I 125 Albumin)
Iothalamate Sodium I 125 Albumin (I125 Iothalamate)
Technetium Tc 99m Pertechnetate
Technetium Tc 99m Albumin Colloid
Technetium Tc 99m Lidofenin
Technetium Tc 99m Tebroxime
Technetium Tc 99m Nofetumomab (Verluma)
Technetium Tc 99m HMPAO labeled WBCs
Technetium Tc 99m Human Serum Albumin
Technetium Tc 99m Serum Albumin (Tc 99m HSA kit)
Xenon XE 127 Gas

Response: While a number of radiopharmaceuticals are already on the pass-through list, we are unable to add some of the ones listed above because we do not have AWPs for them. The AWPs are the basis for payment for these items and without the AWPs we cannot approve them for pass-through payments. As soon as the AWPs are made available to us, we will complete our review to determine their pass-through status. If eligible, they will be added to the pass-through list during the appropriate quarterly update cycle.

Comment: One commenter stated that our transitional pass-through policy for devices precludes pass-through eligibility for capital equipment and therefore does not provide a mechanism under our new system for recognizing the incremental costs associated with capital equipment. The commenter recommended that we recognize capital-equipment costs through our new technology APCs.

Response: Under our new outpatient prospective payment system, capital costs are not paid separately. Payment for these costs are included in the total APC payment amount for each procedure or medical visit and will be updated through our annual updating process. Therefore, the new technology APCs will not be used to make separate payments for capital related costs.

Comment: A number of commenters claimed that we denied pass-through status for the contrast agents.

Response: As clarified in our August 3, 2000 interim final rule with comment, contrast agents other than radiopharmaceuticals are considered supplies and are not eligible for pass-through payments. (See § 419.43(e)(4)(vii).)

Comment: A medical association claimed that we denied pass-through status requests for high dose rate brachytherapy. Another industry group alleged that many brachytherapy related items that manufacturers applied for were excluded from the pass-through list.

Response: Since publishing our initial list of potentially eligible pass-through items to our website on March 9, 2000, we have added 38 brachytherapy items to our pass-through list. High-dose rate brachytherapy will be eligible for pass-through payment effective for services furnished on or after January 1, 2001.

j. Pass-Through Applications Process

Comment: Some commenters urged that we process transitional pass-through applications in a more timely manner. A few other commenters believed that we should have chosen a date later than July 14, 2000 as the application deadline for the October 1, 2000 quarterly update for pass-through items.

Response: We have committed considerable resources to process pass-through applications in a timely manner. Since publication of our preliminary list of 149 potentially eligible pass-through items on our website on March 9, 2000, we have approved nearly 1000 additional items for pass-through payments. We have instituted a coding strategy that allows us to assign a temporary HCPCS code immediately to an eligible pass-through item if a national HCPCS code has not been assigned. We have committed to making quarterly updates to the pass-through list, a commitment that is unprecedented in Medicare's history. We have reviewed all applications timely submitted for each update cycle. Unfortunately, however, we have had to defer items with significantly unclear applications or for which sufficient information was not included to determine that the item meets the statutory criteria. We have endeavored to work closely with the applicants to obtain this information and respond timely to their questions.

Regarding objections to setting a July 14, 2000 deadline for receipt of pass-through applications for the October 1 update, this deadline was established in order to evaluate the applications and make the necessary systems modifications in time for the October release to our fiscal intermediaries and standard systems maintainers.

Comment: One commenter believed that we should update our transitional pass-through list more frequently than quarterly. Some other commenters were concerned that the quarterly updating process could potentially create systems problems for both HCFA and hospitals that would delay payments. They believed that such a delay would, in turn, create cash flow difficulties for hospitals. They urged that we develop contingency plans to address cash flow problems resulting from the transitional pass-through process.

Response: Because of the complexity of our new system, we cannot institute systems changes more frequently than quarterly for pass-through payments. While we believe that making quarterly updates to the pass-through list will present challenges both for HCFA and the hospital industry, we have not been advised that any hospital is experiencing cash flow problems attributable to the transitional pass-through process.

Comment: One commenter urged us to issue guidelines that detail the planned methodologies, data sources, and associated timelines for updating the pass-through list.

Response: Since March 10, 2000, we have published information on our website which provides detailed instructions and deadlines for submitting transitional pass-through applications. These instructions have been revised as needed in order to clarify and update information and may be found on the following HCFA website: http://www.hcfa.gov /medlearn/refopps.htm.

Comment: One commenter claimed that our method and timing of assigning HCPCS codes to eligible transitional pass-through items would preclude Medicare beneficiaries from receiving appropriate treatment. The commenter also alleged that hospitals will not always be adequately reimbursed for their costs for such items and that they will have an incentive to switch to more invasive treatment options with higher costs.

Response: We have expedited the process of assigning HCPCS codes to pass-through items. When an item is determined eligible for pass-through status, a temporary HCPCS code is assigned immediately in order that hospitals may begin billing the item as soon as it is effective for payment.

In addition, section 1833(t)(6)(C)(i) of the Act requires that the hospital's additional payment for drugs and biologicals be determined as the difference between the amount determined under section 1842(o) of the Act (95 percent of AWP) and the portion of the hospital outpatient department fee schedule amount determined by the Secretary to be associated with those items. For devices, the additional payment is the difference between the hospitals' charges adjusted to costs and the portion of the applicable hospital outpatient department fee schedule amount associated with the device. We believe that this payment method will appropriately reimburse hospitals for eligible pass-through items and that hospitals will act in a prudent manner and not compromise their patients' safety and care.

k. Payment for Pass-Through Items

Comment: Several commenters questioned how payment would be made when a pass-through item is included on an outpatient claim. Another commenter stated that our April 7, 2000 final rule with comment period does not state the actual payment amount that will be made for each pass-through item, or provide a good reason for not updating drug and biological average wholesale prices quarterly, or pledge timely correction of payment amount errors. The latter commenter believed that we should make available the actual APC payment rates for pass-through items and institute quarterly pricing-updates for drug and biological APCs.

Response: Transitional pass-through payments for devices are established by taking the hospital charges for each billed item (on an item-by-item basis), reducing them to cost by use of the hospital's cost-to-charge ratio, and subtracting an amount representing the device cost contained in the APC payments for procedures involving that device. Note that for services furnished prior to January 1, 2001, we have not subtracted an amount for the predicate device that is packaged in the relevant APC. However, we will implement this policy beginning with services furnished on or after January 1, 2001. These calculations are all done in the outpatient prospective payment system pricer. Because there are no predetermined APC payment rates for eligible pass-through devices, we cannot publish them in the same manner as we publish the APC payment rates for other services.

For drugs and biologicals, pass-through payments are determined based on 95 percent of the AWP for the eligible drug or biological. We described in our April 7, 2000 final rule (65 FR 18481) the process we used to subtract the cost of the eligible drug or biological contained in the APC payments for procedures involving that drug, radiopharmaceutical or biological. The year 2000 AWPs for pass-through drugs and biologicals on which payments are currently based will be updated annually at the beginning of the next quarter following publication of the updated values. Due to the complexity of our new system, we cannot update AWPs quarterly as requested.

Comment: A number of commenters stated that the codes for drugs in Addendum K of our April 2000 final rule are specific to the dosage amount dispensed and asked what happens if the dosage dispensed to a patient is not equal to the amount associated with the eligible codes. The commenters requested additional information about how providers should account for these situations. They asked if we would allow providers to bill for the product amount associated with the container opened to treat the patient and round up to the nearest whole billing unit.

Response: The APC payment amount for drugs and biologicals is established at the lowest dosage level for the specific drug or biological. If the dosage required in treating the patient exceeds the lowest level specified in the HCPCS code descriptor for the drug or biological, providers may bill the number of units necessary to treat the patient and round them up to the nearest unit. To determine the payment for the drug or biological, multiply the number of billed units by the APC payment amount.

Comment: One commenter stated that the APC payment amount for Eptifibatide, a drug on the pass-through list, does not equal 95 percent of the average wholesale price ($6.28 per 5-mg. service unit). The commenter claimed that the APC payment is 42 percent lower than 95 percent of the AWP. The commenter asked that we correct the payment immediately.

Response: The correct APC payment amount for Eptifibatide injection, 5 mg. is $12.57, of which $1.68 is the minimum unadjusted coinsurance.

Comment: One commenter stated that the APC payment amount for Quadramet, a pass-through drug, is incorrect. The commenter claimed the AWP for this drug is $2,975 rather than $2,875, which the commenter believed is the basis for our APC payment amount. The commenter stated that the pass-through payment should be $942.08 instead of $910.42.

Response: The correct APC payment amount for Quadramet is $942.09. Of this amount, $134.87 is the minimum unadjusted coinsurance.

Comment: A commenter stated that the APC payment amount for Thyrogen, a pass-through drug, should be $494.00 rather than $404.18 per vial.

Response: The APC payment amount of $404.18 is for 0.9 mg. units of Thyrogen rather than 1.1 mg., which appears to be the standard vial dosage. However, because Thyrogen is not available in a vial dosage less than 1.1 mg., we are eliminating the APC payment for 0.9 mg. units (HCPCS code J3240) effective for outpatient prospective payment system services furnished on or after January 1, 2001. We have established a new code, C9108, for Thyrogen, 1.1 mg. with an APC payment amount of $494.00. This new code is effective for outpatient prospective payment system services furnished on or after January 1, 2001.

Comment: A medical association acknowledged our short lead-time for implementing the transitional pass-through provision and urged that we hold a series of face-to-face meetings with physicians and suppliers to clarify and revise our pass-through policies.

Response: Since publishing our April 7, 2000 final rule with comment period, we have met on numerous occasions with physicians and representatives of hospitals, pharmaceutical companies and device manufacturers. During these meetings, we have discussed our transitional pass-through policies and clarified information regarding the pass-through applications process.

Comment: One commenter stated that the April 7, 2000 final rule with comment period requiring the submittal of applications for national HCPCS codes to bill eligible transitional pass-through was published after the application deadline had passed. The commenter alleged that some manufacturers obtained information about the pass-through provisions prior to publication of the final rule, submitted their applications timely, and thus dominated the hospital outpatient market.

Response: On March 9, 2000, we posted information on our website similar to that contained in the April 7, 2000 final rule with comment period about applying for national HCPCS codes for pass-through items. We also

discussed the coding deadline with representatives of the pharmaceutical and device manufacturers associations as well as with hospital industry representatives through conference calls, meetings, and e-mails. We note that the instructions and deadline for submitting applications for a national HCPCS code are well established and were published on HCFA's website (http://www.hcfa.gov /medicare/ hcpcs.htm) more than a year prior to publication of our April 7, 2000 final rule with comment period. Subsequent to these publications, we adopted a new system for assigning codes exclusively for pass-through items to expedite their availability to the hospital industry and Medicare beneficiaries. Therefore, interested parties applying for pass-through status for items have not been required to obtain national HCPCS codes for these items unless they want to bill other payment systems in addition to the hospital outpatient prospective payment system.

l. Focus Medical Review

Comment: One commenter asked that we clarify why we intend to conduct focused medical review of pass-through eligible drugs, biologicals and medical devices.

Response: Our goal is to identify inappropriate billing for these services and to ensure that payment is not made for noncovered services.

3. Budget Neutrality Applied to New Adjustments

In the April 7, 2000 final rule with comment period, in accordance with section 1833(t)(2)(E) of the Act, as amended by section 201(c) of the BBRA 1999, we made the outlier and transitional pass-through payment adjustments under section 1833(t)(5) and section 1833(t)(6) of the Act, respectively, budget neutral. We did not receive any public comments on this provision.

4. Limitation on Judicial Review

In the April 7, 2000 final rule with comment period (65 FR 18503–18504), in accordance with section 1833(t)(12) of the Act (as amended by section 201(d) of the BBRA 1999 and redesignated by section 202(a) of the BBRA 1999), we implemented the extension of the prohibition of administrative or judicial review to include the factors for determining outlier payments (that is, the fixed multiple, or a fixed dollar cutoff amount, the marginal cost of care, or applicable total payment percentage), and the factors used to determine additional payments for certain medical devices, drugs, and biologicals, the insignificant cost determination for these items, the duration of the additional payment or portion of the prospective payment system payment amount associated with particular devices, drugs, or biologicals, and any pro rata reduction.

We did not receive any public comments on this provision.

5. Inclusion in the Hospital Outpatient Prospective Payment System of Certain Implantable Items

In the April 7, 2000 final rule with comment period, we specified that section 1833(t)(1)(B) of the Act, as amended by section 201(e) of the BBRA 1999, provides that ''covered OPD services'' include implantable items described in section 1861(s)(3), (6), or (8) of the Act.

The conference report accompanying the BBRA 1999, H.R. Rept. No. 479, 106th Cong., 1st Sess. at 869–870, (1999), expresses the belief of the conferees that the current DMEPOS fee schedule is not appropriate for certain implantable medical items such as pacemakers, defibrillators, cardiac sensors, venous grafts, drug pumps, stents, neurostimulators, and orthopedic implants as well as items that come into contact with internal human tissue during invasive medical procedures, but are not permanently implanted. In the conference report agreement, the conferees state their intention that payment for these items be made through the hospital outpatient prospective payment system, regardless of how they might be classified on current HCFA fee schedules.

In the April 7, 2000 final rule with comment period, we included the following in the list of items and services whose costs are included in hospital outpatient prospective payment rates: Prosthetic implants (other than dental) that replace all or part of an internal body organ (including colostomy bags and supplies directly related to colostomy care), and including replacement of these devices; implantable DME; and implantable items used in performing diagnostic x-rays, diagnostic laboratory tests, and other diagnostic tests. In accordance with the BBRA 1999 provision, we require that an implantable item be classified to the group that includes the service to which the item relates. We indicated that we would continue to review the impact of packaging implantables in future updates. For more detailed information on this provision, refer to the April 7, 2000 final rule with comment period (65 FR 18443–18444).

Comment: Two commenters (hospitals) expressed concern that the APC for the Cyberonics-NeuroCybernetic Prosthesis (NCP) System, an implantable device used to treat epilepsy patients with partial-onset seizures, will not adequately reimburse hospitals for the cost of the device and the implantation procedure cost. The hospitals recommended that HCFA create a separate APC group for the NCP System implantation.

Response: The NCP System was approved for pass-through status effective for services furnished on or after August 1, 2000 (see Program Memorandum Transmittal No. A–00–42 issued on July 26, 2000). The two components of this system, the NeuroCybernetic Prosthesis Generator and the NeuroCybernetic Prosthesis Lead, will be paid based on the hospital's charges that are converted to cost using the hospital's assigned cost-to-charge ratio. These devices have been assigned to two separate pass-through APCs (1048 and 1306, respectively) and should be billed using HCPCS code C1048 for the generator and C1306 for each lead.

Comment: Several commenters from physician practices and a device manufacturer raised concerns that the APC payment level for the Contigen Implant procedure is inadequate to cover the facility costs and the Contigen Implant supplies. According to the commenters, the APC reimbursement amount only covers the 2–3 Contigen Implant syringes used per procedure. The commenters recommended that we map the Contigen Implant procedure and the collagen skin test to higher paying completely new APCs, to more adequately reflect reasonable costs for syringes and skin tests used in the procedure, in addition to appropriate facility fees.

Other commenters raised concerns that the separate APC reimbursement for the pre-Contigen Implant procedure testing is inadequate to reimburse for the reasonable cost of the supply. They recommended that we allow payment of Contigen Implant syringes according to the DMEPOS fee schedule.

One commenter recommended that we create a special ancillary APC to cover Contigen Implant syringes and the collagen skin test.

Response: While we understand the commenters' concerns, Contigen Implant syringes do not qualify for transitional pass-through status because they do not meet all of the device criteria set forth in § 419.43(e)(4). Specifically, they are not items that are surgically implanted or inserted in a patient. However, both collagen implant

material and the collagen skin test are paid as APCs (that is, APCs 6012 through 6016 and 343, respectively). We will examine data after the first year of billing under the prospective payment system to determine if we are adequately capturing the cost of performing these procedures.

As stated in our April 7, 2000 final rule with comment period, we will initiate the annual review process for the various components of our system, including the APC groupings, in calendar year 2001 for services furnished on or after January 1, 2002. We expect to publish our proposed rule for 2002 in the spring of 2001.

Comment: A device manufacturer inquired as to what will happen when devices are taken off the transitional pass-through list after 2 to 3 years. The commenter stated that the additional expense of these implantable devices will require that HCFA reassign these CPT codes to an APC that is comparable clinically and in terms of resources used at the close of the transition period. If this does not occur, the commenter indicated that hospitals would be seriously underpaid for the use of these technologies and other technologies in similar circumstances.

Response: As stated above, the BBRA 1999 allows for 2 to 3 years of transitional pass-through payments to be made for new devices, drugs, and biologicals. After the temporary payment period expires for any item, its cost will be packaged with the relative procedure code or medical visit and assigned to the APC group that is clinically related and comparable in resources used. Thus, the APC groupings, weights, and payments will be updated in a subsequent year to include costs associated with former pass-through items.

Comment: A coalition of health care providers and insurers indicated that providers should be allowed to report all DME, orthotics, and prosthetic devices, both implantable and nonimplantable, on the UB–92 to the fiscal intermediary. The fiscal intermediary should be able to either pay for the item via the DMEPOS fee schedule or through the APC. This also would allow a tracking system for future ratesetting, and consolidate the billing into one claim. This would consolidate all charges on one bill per encounter, which simplifies processing and is consistent with other third party payer claims processing as well as Medicare inpatient claims processing.

Response: Section 201(e) of the BBRA 1999 amended section 1833(t)(1)(B) of the Act to require that covered outpatient prospective payment system services include implantable medical items, described in section 1861(s)(3), (6), or (8) of the Act. These items were formerly paid under the DMEPOS fee schedule. The statute is explicit in defining which DME items are payable under the hospital outpatient prospective payment system.

Also, we cannot adopt the suggested billing changes for DME as the commenter suggested. All services that are billed through the fiscal intermediaries, whether they are paid under the hospital outpatient prospective payment system or DMEPOS, may be submitted on the UB–92 (or the equivalent electronic transaction). However, there are numerous, very exacting, specific criteria and rules that govern Medicare coverage and payment for nonimplantable DME and oxygen. The DME regional carriers are exclusively qualified to deal with these issues. Therefore, claims for nonimplantable DME and oxygen cannot be billed to the fiscal intermediaries. Instead, providers must continue to submit claims for nonimplantable DME and oxygen to the DME regional carriers using form HCFA–1500 (or the equivalent electronic transaction).

It should be noted that if a health care provider submits an electronic claim for these services, the transaction must comply with the standards adopted by the Secretary in the August 17, 2000 final rule (65 FR 50312) Standards for Electronic Transactions. The compliance date of that rule is October 16, 2002.

Comment: A device manufacturer expressed concern about how the new system will change the payment mechanism for cochlear implants. Under the DMEPOS fee schedule, payments were fixed and unrelated to hospital charges. Now, under the new system, hospitals must properly establish charges that, when multiplied by the ratio of cost to charges, provide an accurate reflection of cost. This manufacturer was concerned that they will have to collect data to determine the charges hospitals have set for these devices and the applicable ratio of cost to charges. They believe the charges may not have been set appropriately to be consistent with the ratio of cost to charges. If not, pass-through payments might be substantially less than the actual cost for these medical devices.

This manufacturer indicated that it is working to obtain the required charge and cost report data from providers of cochlear implant procedures and will report back to us once it has these data. The manufacturer requested that we agree to work with them in setting any future update to the payment allowance recognizing the short timeframe available to collect the data.

Response: We appreciate the commenter's offer to assist us in collecting cost and charge data on cochlear implants billed by hospitals. However, for purposes of making transitional pass-through payments for new medical devices such as cochlear implants, it is not necessary for manufacturers to obtain cost report data from hospitals to assist us in developing hospital-specific, cost-to-charge ratios to calculate these payments. We have already calculated these ratios and assigned them to providers. Each provider is responsible for accurately reporting its charges in order that we may calculate the appropriate payment for the pass-through device.

6. Payment Weights Based on Median or Mean Hospital Costs

Section 1833(t)(2)(C) of the Act requires the Secretary to establish relative payment weights for covered hospital outpatient services. This section requires that the weights be developed using data on claims from 1996 and data from the most recent available hospital cost reports.

As specified in the April 7, 2000 final rule with comment period (65 FR 18482), section 201(f) of the BBRA 1999 amended section 1833(t)(2)(C) of the Act to authorize the Secretary to base the relative payments weights on median or mean hospital costs. In implementing the BBRA 1999 provision, we decided to adopt as final our previously proposed policy to base the relative payment weights on median (as opposed to mean) costs. We had already used median costs to reconstruct our database for the outpatient prospective payment system group weights and conversion factors in a proposed rule and we believe that this method is still valid, especially considering the time constraints for implementation of the BBRA 1999 provision. We indicated that, among other things, reconstructing our database to evaluate the impact of using mean costs after the BBRA 1999 was enacted would have delayed implementation of the hospital outpatient prospective payment system rule.

Comment: A group of hospitals urged us to adopt a mean-based APC relative weight system to implement section 201(f) of the BBRA 1999, which authorizes, but does not require, the Secretary to use mean (rather than median) costs in determining the APC payment weights. The commenters contend that use of the geometric mean is standard in the industry as the basis

for calculating payment weights for prospective payment systems. They pointed out that the geometric mean is used because costs are not distributed ''normally'' (that is, there are no negative costs) and that for APCs that include low volume, high costs procedures, the geometric mean is preferable for adequately accounting for these costs. The commenters believed that our use of median costs also forced us to select an arbitrary value for relative weight 1.0, because finding the median of medians is meaningless. The commenters believed that, given the Congress' clarification in section 201(f) of the BBRA 1999, we should at least evaluate the impact of a mean-based system in our system review for 2001.

Response: We plan to further evaluate the feasibility of using mean rather than median costs for calculating APC payment weights in future updates. In order to make a decision about whether we should change the basis we are using for determining payment weights, we have to analyze and rerun claims data and conduct extensive impact analyses to assess the impact such a change would have on different types of providers and different types of services.

7. Limitation on Variation of Costs of Services Classified Within a Group

Section 1833(t)(2) of the Act was amended by section 201(g) of the BBRA 1999 to limit the variation in resource use among the procedures or services within an APC group. Specifically, section 1833(t)(2) of the Act provides that the items and services within a group cannot be considered comparable with respect to the use of resources if the highest cost item or service within a group is more than 2 times greater than the lowest cost item or service within the same group. The Secretary is to use either the mean or median cost of the item or service.

Section 1833(t)(2) of the Act, as amended, also allows the Secretary to make exceptions to this limit on the variation of costs within each group in unusual cases such as low volume items and services, although we may not make such an exception in the case of a drug or biological that has been designated as an orphan drug under section 526 of the Federal Food, Drug, and Cosmetic Act.

In the April 7, 2000 final rule with comment period, we elected to use the median cost because we have continued to set the relative payment weights for each APC based on median hospital costs. We modified the composition of the APC groups and then made additional changes to the APC in response to public comments on individual or serial APCs.

In determining whether or not to accept changes recommended by commenters, we focused on five criteria that are fundamental to the definition of a group within the APC system. The decision to accept or decline a modification to an APC group was determined based on whether the change enhanced, detracted from, or had no effect on the integrity of an APC group within the context of the following five criteria:

- Resource homogeneity;
- Clinical homogeneity;
- Provider concentration;
- Frequency of services; and
- Minimal opportunity for upcoding and code fragmentation.

For a full explanation of these criteria, refer to the April 7, 2000 final rule with comment period (65 FR 18457).

After we modified the composition of the APC groups based on the recommendations of commenters, we applied the median cost variation limit required by section 201(g) of the BBRA 1999 to the revised APC groups. As a result of our analysis of the array of median costs within the revised APC groups, we had to split some otherwise clinically homogeneous APC groups into smaller groups. We listed the APC groups that we had designated as exceptions to the ''two times'' requirement and our reasons for granting the exception. We based the exceptions on factors such as low procedure volume, suspect or incomplete cost data, concerns about inaccurate or incorrect coding, or compelling clinical arguments. We indicated that we would be examining the extent to which the APC reorganization due to the ''two times'' rule results in upcoding (refer to the April 7, 2000 final rule with comment period (65 FR 18458–18475)).

Comment: We received requests to examine 51 APCs that commenters alleged violated the ''two times'' rule.

Response: We reevaluated the APCs listed below, upon which we received comments, and found that most of them did not warrant revision. We received no new information about these APC groups that would alter our previous decision. These APCs are identified below under numbers 1 and 2.

Our review also revealed that a few APC groups did warrant revision and we have reconfigured these APCs accordingly. We have listed these APCs under number 3. In addition, our review identified some APCs that are additional exceptions to the ''two times'' requirement. These APC groups and our reasons for the exception are listed below under number 4.

In reviewing the APC groups for conformance to the ''two times'' requirement, we exempted from the analysis codes for unlisted services and procedures and those codes that represent less than 2 percent of the claims in the APC (our test for low volume).

1. Taking into account the exemptions mentioned above, the following APC groups that we reviewed based on comments have not been reconfigured:

0005 Level II Needle Biopsy/Aspiration Except Bone Marrow
0076 Endoscopy Lower Airway
0088 Thrombectomy
0090 Level II Implantation/Removal/Revision of Pacemaker, AICD or Vascular Device
0111 Blood Product Exchange
0112 Extracorporeal Photopheresis
0121 Level I Tube changes and Repositioning
0143 Lower GI Endoscopy
0146 Level I Sigmoidoscopy
0149 Level II Anal/Rectal Procedure
0150 Level III Anal/Rectal Procedure
0151 Endoscopic Retrograde Cholangio-Pancreatography (ERCP)
0162 Level III Cystourethroscopy and other Genitourinary Procedures
0260 Level I Plain Film Except Teeth
0262 Plain Film of Teeth
0265 Level I Diagnostic Ultrasound Except Vascular
0268 Guidance Under Ultrasound
0269 Echocardiogram Except Transesophageal
0278 Diagnostic Urography
0280 Level II Diagnostic Angiography and Venography Except Extremity
0282 Level I Computerized Axial Tomography
0283 Level II Computerized Axial Tomography
0284 Magnetic Resonance Imaging
0286 Myocardial Scans
0290 Standard Non-Imaging Nuclear Medicine
0291 Level I Diagnostic Nuclear Medicine Excluding Myocardial Scans
0292 Level II Diagnostic Nuclear Medicine Excluding Myocardial Scans
0294 Level I Therapeutic Nuclear Medicine
0297 Level II Therapeutic Radiologic Procedures
0301 Level II Radiation Therapy
0303 Treatment Device Construction
0304 Level I Therapeutic Radiation Treatment Preparation
0305 Level II Therapeutic Radiation Treatment Preparation

2. The following APC groups were listed in the April 7, 2000 final rule

with comment period as exceptions to the ''two times'' rule and our review found no factual basis for modifying our decision:

0030 Breast Reconstruction/ Mastectomy
0264 Level II Miscellaneous Radiology Procedures
0274 Myelography
0279 Level I Diagnostic Angiography and Venography Except Extremity
0311 Radiation Physics Services
0371 Allergy Injections

3. We have reconstructed the four APCs shown below as a result of adding the cost of certain devices used in performing procedures included in these APCs. We discuss this change in section III.B. of this preamble.

0080 Diagnostic Cardiac Catheterization
0081 Non-Coronary Angioplasty or Atherectomy
0082 Coronary Atherectomy
0083 Athrectomy

4. Following are additional exceptions to the ''two times'' rule and our reasons for the exceptions. We are excepting these APCs from the ''two times limit'' on an interim basis, until we can review data from the first year of billing under the hospital outpatient prospective payment system.

0142 Small Intestine Endoscopy: The codes in APC 0142 are clinically similar and should show a relative progression of cost with slight increases in complexity. This effect does not occur, presumably due to low volume (although exceeding our low volume threshold) or inconsistent coding. Splitting this APC into two, based on current data, would be unjustified.

0145 Therapeutic Anoscopy: The costs of the codes in this APC are aberrant, with several of them exceeding the costs of more extensive procedures such as sigmoidoscopy and colonoscopy.

0152 Percutaneous Biliary Endoscopic Procedures: The codes in this APC have so few occurrences that we cannot justify splitting the group. Several of the codes call for the use of devices such as stents that may be paid for separately.

0161 Level II Cystourethroscopy and other Genitourinary Procedures: The costs of the codes in this APC are aberrant, with more comprehensive codes costing less than the base codes.

0195 Level V Female Reproductive Procedures: This is a low volume APC, with aberrant cost data. In several instances, codes that are more comprehensive cost less than the related, simpler code.

0296 Level I Therapeutic Radiologic Procedures: We believe the codes at the lower end of the median cost in this APC would be underpaid if we were to move them to a lower-paying APC.

0300 Level I Radiation Therapy: We believe we would underpay codes at the lower end of median cost in this APC if we were to move them to a lower-paying APC.

0312 Radioelement Applications: We believe the costs in this very low volume APC are aberrant. However, the group is completely coherent clinically. The radioactive elements related to these codes would receive separate payment.

0313 Brachytherapy: We believe the costs in this very low volume APC are aberrant. The group is coherent clinically. The radioactive elements related to these codes would receive separate payment.

0314 Hyperthermic Therapies: This APC has an extremely low volume, with aberrant costs.

8. Annual Review of the Components of the Hospital Outpatient Prospective Payment System

In the April 7, 2000 final rule with comment period (65 FR 18501–18502), we indicated that, in accordance with section 1833(t)(9) (as redesignated and revised by sections 201(h) and 202(a) of the BBRA 1999), we would review and update annually, for implementation effective January 1 of each year, the APC groups, the relative payment weights, and the wage and other adjustments that are components of the hospital outpatient prospective payment system. In accordance with section 201(h)(2) of the BBRA 1999, an annual review process will begin in calendar year 2001 for the hospital outpatient prospective payments that would take effect for services furnished on or after January 1, 2002. This review process will involve consultation with an expert advisory panel. We will provide notice of the formation of the expert advisory panel in the **Federal Register**. The expert outside advisory panel will review and make recommendations to us on the clinical integrity of the groups and weights and may use data other than those collected or developed by us for their review and advisory functions.

We note that in section III of this preamble, we are updating the wage index values and the conversion factor under the hospital outpatient prospective payment system effective for calendar year 2001. We also are making appropriate changes to the APC groups to reflect additions and deletions of CPT codes and changes to a limited number of APCs to incorporate the cost of certain devices used in performing those procedures that were excluded from our initial ratesetting methodology.

Comment: One commenter stated that the wage index for the Hattiesburg, Mississippi Metropolitan Statistical Area (MSA), .7306, was printed incorrectly in our April 7, 2000 final rule with comment period. The commenter stated that use of this value would result in an underpayment for that area. The commenter further stated that, ''the appropriate wage index for the Hattiesburg, Mississippi MSA for the fiscal year 2000 is .7634.'' The commenter was concerned that we had previously acknowledged this error and promised to correct it via a program memorandum to fiscal intermediaries dated April 2000 (Transmittal Number A–00–17), but had failed to do so in our April 7, 2000 final rule with comment period.

Response: We apologize for the confusion. The fiscal year 2000 hospital inpatient prospective payment system wage index value for the Hattiesburg, Mississippi (MSA) was changed from .7306 to .7634 in accordance with section 153 of the BBRA 1999 that required us to include wage data from Wesley Medical Center in calculating the wage index for this MSA. On August 1, 2000, we published in the **Federal Register** an interim final rule with comment period (65 FR 47026) that included Hattiesburg's new hospital inpatient prospective payment system wage index. For services paid under the hospital outpatient prospective payment system, the new wage index value is effective for services furnished on or after August 1, 2000.

9. Copayment Amounts Not Affected by Pass-Throughs

Section 1833(t) of the Act, as established by the BBA of 1997, includes a mechanism designed to achieve a beneficiary coinsurance level equal to 20 percent of the prospectively determined payment rate established for the service. In the April 7, 2000 final rule with comment period, we specified how a copayment amount is calculated annually for each APC group under the hospital outpatient prospective payment system.

We also explained that sections 201(a) and (b) of the BBRA 1999 amended section 1833(t) of the Act to provide for additional payments to hospitals for outlier cases and for certain medical devices, drugs, and biologicals and that these additional payments to hospitals will not affect copayment amounts. Redesignated section 1833(t)(8)(D) of the Act, as amended by section 201(i) of the BBRA 1999, provides that the copayment amount is to be computed as

if outlier adjustments, adjustments for certain medical devices, drugs, and biologicals, as well as any other adjustments we may establish under section 1833(t)(2)(E) of the Act, had not occurred.

In addition, we specified that section 202 of the BBRA 1999 added a new section 1833(t)(7) to the Act to provide transitional corridor payments to certain hospitals through calendar year 2003 and indefinitely for certain cancer centers. Section 1833(t)(7)(H) of the Act provides that the transitional corridor payment provisions will have no effect on determining copayment amounts.

We specified that copayment from beneficiaries will not be collected for the additional payments made to hospitals (outlier and transitional pass-throughs) by Medicare. Beneficiary copayment amounts will be calculated as if the outlier and transitional pass-throughs had not occurred (65 FR 18487–18488).

When a drug or device pass-through payment is reduced by the otherwise applicable APC payment amount that is associated with the drug or device, it is only the portion of the payment that represents an additional pass-through payment that is not subject to copayment. The portion that does not represent an additional pass-through payment will be subject to copayment.

We did not receive any public comments on this provision.

10. Extension of Cost Reductions

In the April 7, 2000 final rule with comment period (65 FR 18439), we announced that, in accordance with section 1861(v)(1)(S)(ii) of the Act (as amended by section 201(k) of the BBRA 1999), the 5.8 and 10 percent reductions for hospital operating and capital costs, respectively, would extend until the first date that the hospital outpatient prospective payment system is implemented (which was August 1, 2000).

We did not receive any public comments on this provision.

11. Clarification of Congressional Intent Regarding Base Amounts Used in Determining the Hospital Outpatient Prospective Payment System

Section 201(l) of the BBRA 1999 provided that, ''With respect to determining the amount of copayments described in paragraph (3)(A)(ii) of section 1833(t) of the Act, as added by section 4523(a) of BBA, Congress finds that such amount should be determined without regard to such section, in a budget neutral manner with respect to aggregate payments to hospitals, and that the Secretary of Health and Human Services has the authority to determine such amount without regard to such section.'' In accordance with this provision, in the April 7, 2000 final rule with comment period (65 FR 18482–18493), we explained how we determined APC group weights, calculated an outpatient prospective payment system conversion factor, and determined national prospective payment rates, standardized for area wage variations, for the APC groups. We then explained how we calculated the aggregate hospital outpatient prospective payment to hospitals in a budget neutral manner and how we calculated beneficiary coinsurance amounts for each APC group.

We did not receive any public comments on this provision.

12. Transitional Corridors for Application of Outpatient Prospective Payment System

Section 1833(t)(7) of the Act, as added by section 202(a)(3) of the BBRA 1999, provides for payment adjustments during a transition period to limit the decline in payments under the outpatient prospective payment system for hospitals. These additional payments are to be implemented without regard to budget neutrality and are in effect through 2003.

In the April 7, 2000 final rule with comment period (65 FR 18499–18500), we specified that, from the date the prospective payment system is implemented through 2003, a provider, including a CMHC, will receive an adjustment if its prospective payment system payments for outpatient services furnished during the year is less than a set percentage of its pre-BBA amount for that year. The pre-BBA amount is the product of the reasonable cost the hospital incurs for prospective payment system services furnished during the year and the payment-to-cost ratio for covered prospective payment system services furnished during the cost reporting period ending in calendar year 1996. Additionally, we provided that small rural hospitals with 100 or fewer beds and cancer hospitals will be held harmless under this provision. Small rural hospitals will be held harmless for services furnished before January 1, 2004. The hold-harmless provision applies permanently to cancer centers. We announced that we will make interim payments to the affected hospitals subject to retrospective adjustments and that these provisions do not affect beneficiary coinsurance. Finally, we specified that this provision is not subject to budget neutrality.

a. Interim Payment Versus Final Settlement

Comment: One commenter recommended that we make retroactive payments to hospitals in those ''situations where underpayments have been made between the prospective payment system payments as compared to the pre-prospective payment system amounts.'' Another commenter asked that we set forth the process that would be used to determine retroactive payment adjustments if the hospital's interim payments are higher or lower than its actual experience. The commenter further asks that we state whether the interim payments will be compared to outpatient payments shown on settled or audited cost reports.

Response: Final transitional corridor payments are determined based on a provider's settled cost report. At the time the cost report is settled, the reasonable costs incurred by the provider to furnish outpatient prospective payment system services during the calendar year are known and that amount is then multiplied by the provider's 1996 payment-to-cost ratio to calculate the pre-BBA amount. The pre-BBA amount for a calendar year is compared to the actual prospective payment system payments the provider received to determine whether the provider may be entitled to a transitional corridor payment. Although the final transitional corridor payment is based on a settled cost report, beginning in October 2000, we have been making monthly interim payments to providers based on estimates of what their transitional corridor payments should be based on the monthly bills the provider submits. The monthly payments are designed to maintain some additional cash flow to providers that may otherwise realize significant losses on services that are being paid under the prospective payment system.

b. Payment-to-Cost Ratios

Comment: One commenter argued that our formula for calculating the base payment-to-cost ratio for the transitional corridor payments does not comport with the statutory requirements. The commenter stated that we define the denominator of the base payment-to-cost ratio to be ''[the] reasonable cost of these services for the period, without applying the cost reductions under section 1861(v)(1)(S) of the Act.'' The commenter contends that the phrase ''without applying the cost reductions under section 1861(v)(1)(S) of the Act'' is not included in section 1833(t)(7)(F)(ii)(II) of the Act, as

amended by section 212 of the BBRA 1999. The commenter claimed that by defining the denominator in this manner, the payment-to-cost ratio is understated and transitional corridors payments to hospitals would be reduced. The commenter stated that such a reduction is contrary to Congressional intent and urged us to modify our base payment-to-cost denominator set forth in § 419.70(f)(2)(ii) to exclude the phrase ''without applying the cost reduction under section 1861(v)(1)(S) of the Act.''

Response: The phrase ''without applying the cost reductions under section 1861(v)(1)(S) of the Act'' was intended to make clear that a hospital's 1996 ''reasonable costs'' do not include the effects of the reductions in section 1861(v)(1)(S) of the Act. We did not mean to suggest that we were taking the hospital's 1996 ''reasonable costs'' and then adding back the reductions for purposes of determining the denominator of the base payment-to-cost ratio. We view the hospital's 1996 reasonable costs as the unreduced amount; thus, the denominator of the hospital's base payment-to-cost ratio (1996 reasonable costs) does not reflect the reductions. We believe that our policy is consistent with the purpose of the transitional corridor provision. Under this policy, if a hospital incurs the same amount of costs during the transitional corridor as in 1996, then its pre-BBA amount (the amount that estimates what the hospital would have received in the current year if payments were calculated under the pre-prospective payment system) would be the same as the payments the hospital received in 1996. Under the methodology suggested by the commenter, if a hospital incurs the same amount of costs during the transitional corridor as in 1996, then its pre-BBA amount would be *higher* than the payments the hospital received in 1996. The language in § 419.70(f)(2)(ii) as set forth in the April 7, 2000 final rule with comment period was intended to clarify, not revise, the definition of 1996 reasonable costs, but we recognize that the phrase at issue may have inadvertently caused confusion to the extent it is redundant; accordingly, we are revising that section to remove the phrase.

Comment: One commenter asked us to clarify the term ''payment-to-cost ratio'' and the data that will be used to compute the ratio. Several commenters asked why we did not give the 1996 outpatient prospective payment system-specific amounts required to compute the payment-to-cost ratio and the methodology for calculating it.

Response: The statutory definition of base ''payment-to-cost ratio'' is fairly straightforward. Under section 1833(t)(7)(F) of the Act, the base payment-to-cost ratio for a given hospital is the ratio of (1) the hospital's Medicare Part B reimbursement for covered OPD services for the cost reporting period ending during 1996, to (2) the hospital's reasonable costs for that period. We are in the process of developing program instructions for fiscal intermediaries (for notification to providers) to provide detailed information on how payment-to-cost ratios are calculated. These instructions will be made available as soon as possible.

Comment: One hospital association recommended that we revise our regulations to explicitly state that we will adjust the provider's 1996 payment-to-cost ratio ''whenever subsequent developments occur that affect the data used in the calculation.'' The commenter cited final audit adjustments and appeal determinations as examples of adjustments that would warrant changing the 1996 cost data used to calculate the provider's payment-to-cost ratio. The commenter stated that this policy is consistent with similar adjustments made under the prospective payment systems for both inpatient operating and capital-related costs.

Response: We agree with the commenter. In the event final audit adjustments or appeals result in a change in outpatient costs or payments for the provider's 1996 cost report, the provider's payment-to-cost ratio would be recalculated.

Comment: One commenter asked for clarification on the treatment of direct graduate medical education costs and education costs for nursing and allied health programs in calculating the payment-to-cost ratio. The commenter assumed that such costs are excluded from the pre-BBA amount because they will continue to be paid on a cost pass-through basis.

Response: The commenter is correct that direct graduate medical education costs and certain costs of nursing and allied health programs are paid on a cost pass-through basis and will not be included in calculating a provider's pre-BBA amount.

Comment: One commenter asked that we explain our reasons for basing the transitional corridor interim payments on a 0.8 payment-to-cost ratio. The commenter suggested that a provider be allowed to modify its interim transitional corridor payment if it can show that its payment-to-cost ratio is higher or lower than the 0.8 level.

Several commenters questioned why we chose to use a standard 0.8 payment-to-cost ratio for all providers in calculating the interim payment if provider-specific payment-to-cost ratios were available. They stated that 9 of the 10 cancer centers have payment-to-cost ratios that exceed 0.8.

Response: The standard payment-to-cost ratio of 80 percent is an average value that we calculated for payment-to-cost ratios across all hospitals. We decided to use 80 percent for all providers to permit us to make interim payments as soon as possible following the implementation of the outpatient prospective payment system. If we had attempted to calculate individual payment-to-cost ratios for all providers, it would have delayed, perhaps for several months, the introduction of interim payments. Final transitional corridor payments will be calculated using each provider's payment-to-cost ratio for the relevant year at the time of settlement of the cost report. In the future, as we gain more experience with interim payments, we will consider permitting modification of payment-to-cost ratios to reflect particular circumstances.

c. Cost-to-Charge Ratios

Comment: One commenter stated that the April 7, 2000 final rule with comment period did not explain how the transitional corridor payments would be implemented for the 10 cancer hospitals. The commenter noted that while Program Memorandum Transmittal No. A–00–23 issued by us on April 7, 2000, does describe how these payments are to be calculated it does not clarify how we derived the hospital-specific cost-to-charge ratios used to compute the transitional corridor payments.

Several commenters representing the 10 cancer centers stated that the cost-to-charge ratios for their centers that will be used in calculating their transitional corridor, outlier, and transitional pass-through payments are significantly lower than their estimates. They requested that we explain how we determined their ratios and comment on the appropriateness of our methodology. They also asked that we respond to a number of specific questions to allow hospitals to determine whether the cost-to-charge ratios accurately reflect the hospital's cost and provide a fair base for calculating their transitional corridor payments.

Response: On September 8, 2000, we issued a Program Memorandum Transmittal No. A–00–63, which provides a detailed explanation of how hospital cost-to-charge ratios were

calculated. This program memorandum is available on HCFA's internet website at www.hcfa.gov/Medicare.

d. Interim Payments Limited to 85 Percent of the Estimated Transitional Corridor Payment

Comment: One commenter asked why we will only pay 85 percent of the estimated transitional corridor payment as an interim payment. Another commenter recommended that we reconsider our policy to pay providers only 85 percent of their transitional corridor payments on the interim basis. The commenter stated that our policy to withhold 15 percent of each provider's payment until the fiscal intermediary finalizes the provider's cost report is contrary to Congressional intent to preserve hospitals' cash flow and ensure them of an ability to provide outpatient services to beneficiaries, especially those in rural areas. Another commenter stated that retaining 15 percent of each provider's estimated transitional corridor payments until the provider's cost report is settled is contrary to Congressional intent and defers relief provided by statute for several years.

Response: We limited the interim payment to less than 100 percent of the estimated payment in order to minimize the risk of overpayment. If interim payments exceed the final settled amounts, we would need to initiate recoupment procedures that place additional burden both on the agency and on providers. Eighty-five percent was chosen as a reasonable percentage that prudently balances the cash flow needs of some providers with concerns regarding possible difficulties in the recovery of overpayments. We have used comparable figures in other situations in which we make interim or advance payments. One example where we specified 85 percent for advance payments is in the contingency plan that we published to address the possibility that either our contractors or individual providers would be unable to process claims at the initiation of the outpatient prospective payment system. In the future, as cost reports are settled and we are able to determine how well interim transitional corridor payments relate to final transitional corridor payments, we will reevaluate this aspect of our interim payment policy.

e. Providers Having More Than One 1996 Cost Report

Comment: Several commenters stated that we did not discuss in our final rule how we would calculate the 1996 payment-to-cost ratio in cases where a provider has more than one cost report that is less than 12 full months during the fiscal year ending in 1996. The commenters asked which would be the appropriate cost report to use in calculating the transitional corridor payments. One commenter explained that this situation may occur if ownership changed during the provider's fiscal year ending in 1996.

Response: The 1996 cost report that will be used to calculate a payment-to-cost ratio is the cost report period that ends in calendar year 1996. If a provider has two cost reports that end in 1996, we will make a decision about which cost report to use on a case-by-case basis, depending on which appeared to be the most representative of the provider's experience in 1996. For example, if one cost report covers a longer period, we would likely use that one.

f. Providers Having No 1996 Cost Report

Comment: One commenter expressed concern about insufficient guidance from us about how transitional corridor payments would be determined for providers that did not file cost reports during 1996. The commenter believed that because the statute is silent on this issue, we have the discretion to develop such policy. The commenter strongly opposed any decisions by us to preclude providers without 1996 cost reports from being eligible to receive transitional corridor payments.

Another commenter requested that we treat new hospitals that did not file a 1996 cost report the same as rural hospitals. The commenter contended that the pre-BBA payment level for these hospitals should be based on the hospital's first full cost reporting period, and would be guaranteed at that level through December 31, 2003. Another commenter suggested as an option that we assign a regional average payment-to-cost ratio for existing providers to providers without a 1996 cost report.

Response: Under the statute, the amount of transitional payments to providers depends on the provider's reimbursement for the 1996 cost reporting period. We intend to monitor the adequacy of payments to providers not having a 1996 cost report, but we believe that a statutory change is required in order to provide transitional payments to providers that did not have a 1996 cost report.

g. Prospective Payment System Delay and Transitional Corridor Payments

Comment: One commenter expressed concern about the potential effect of delaying implementation of the hospital outpatient prospective payment system on the duration of the transitional corridor payments as provided by law. The commenter stated that our decision to delay implementation of the prospective payment system for 1 month, from July 1, 2000 to August 1, 2000, should not result in a 1-month loss of transitional corridor payments for providers. The commenter believed that the 3½ years of corridor payments required by law for non-cancer hospitals paid under the outpatient prospective payment system should not be reduced due to delayed implementation of the prospective payment system. The commenter urged us to seek a legislative change if we determine the 3½ year period for transitional corridor payments must coincide with the first 3½ years of actual prospective payment system implementation.

Response: For hospitals that do not qualify for the permanent hold-harmless provision applicable to cancer hospitals, the statute provides for transitional corridor payments through the end of calendar year 2003. We will monitor and evaluate prospective payment system payments and will consider whether it would be appropriate to recommend that Congress legislate an extension of transitional corridor payments.

h. Rural Hold-Harmless Provision

Comment: One commenter suggested that we reevaluate the definition of rural outpatient hospitals eligible for the hold-harmless provision and consider including rural hospitals that have 100 to 200 beds, ''but whose outpatient volumes are not sufficient to maintain the facilities' finances.''

Response: The bed size for hospitals to qualify for the rural hospital hold-harmless provision is limited by statute, under section 1833(t)(7)(D)(i) of the Act, to hospitals that have no more than 100 beds.

Comment: One commenter stated that on page 18501 of the April 7, 2000 final rule with comment period, we state that bed size under the rural hospital hold-harmless provision will be determined in the same manner as it is for the hospital inpatient prospective payment system indirect medical education adjustment. The commenter contended that we have not provided these instructions to fiscal intermediaries. The commenter questioned whether the fiscal intermediaries are using the number of beds reported on the hospital cost reports to determine the bed size. Still another commenter stated that we failed to specify how beds are to be counted under the hospital outpatient prospective payment system. The commenter further stated that our impact analysis published in the April 7, 2000 final rule with comment period

suggests that available bed counts shown on the HCFA–2552 cost report S–3 Worksheet are used to determine if a hospital has 100 or fewer beds to qualify for the rural hold-harmless transitional corridor payment provision. The commenter urged us to clarify this issue.

Response: In Program Memorandum Transmittal No. A–00–23, later revised in June 2000 as Program Memorandum Transmittal No. A–00–36, we provided instructions to fiscal intermediaries concerning how to calculate interim transitional corridor payments. As indicated in the April 7, 2000 final rule with comment period, the bed size used for transitional corridor payments will be the same bed size defined in and used to calculate indirect medical education costs and disproportionate share adjustments under the hospital inpatient prospective payment system. Fiscal intermediaries are instructed to obtain certain provider-specific information needed to make the calculation from the outpatient provider-specific file that they maintain. Certain items on the outpatient provider-specific file, including bed size, are taken directly from the provider file used in processing inpatient claims.

Comment: One commenter urged that we revise policy for determining bed size for purposes of defining rural providers eligible for the hold-harmless provision. The commenter advocated that we adjust a provider's count of acute inpatient days to account for observation patients occupying acute inpatient beds.

Response: The commenter did not provide a rationale for their recommendation. We believe that it is appropriate to adopt a policy for purposes of the outpatient prospective payment system that is consistent with the policy for purposes of the inpatient prospective payment system; therefore, we are not making a change at this time.

Comment: A commenter specifically asked that, for purposes of determining bed size for rural providers, we clarify what year is used to determine bed size. The commenter also asked what our policy is regarding providers that changed their inpatient capacity prior to July 1, 2000, and those that may change this capacity during the 3½ year transition period. The commenter suggested that we permit hospitals to downsize capacity without affecting their eligibility for hold-harmless status.

Response: Under § 412.105(b), to determine bed size for the rural hold-harmless provision, we calculated bed size on the basis of the provider's cost reporting period. A rural hospital's bed size and, therefore, its eligibility for hold-harmless treatment may change from one cost reporting period to the next.

Comment: Several commenters asked us to clarify whether a hospital's reclassification for either the wage index area or standardized amount affects its eligibility for the rural hold-harmless payment. The commenter believed that, because the BBRA 1999 statutory provision relevant to the rural hold-harmless provision refers to providers ''located in a rural area'' rather than the provider's payment status, a provider's geographic reclassification for wages or standardized amount has no bearing on its rural hold-harmless status. A few commenters argued that a geographic reclassification under inpatient prospective payment system for the wage index or the standardized amount is not relevant for purposes of the hold-harmless rural payment provision and that these reclassified hospitals should be included in the rural hold-harmless payment.

Response: If a hospital is located in a rural area, it will not lose its eligibility for hold-harmless payments if it obtains a geographic reclassification under the inpatient prospective payment system for purposes of determining its wage index or standardized amount.

Comment: A number of commenters expressed concern about the various aspects of the hold-harmless provision, referring to sections 1886(d)(8)(E) and 1833(t)(13) under section 401 of the BBRA 1999, and asked about a hospital's eligibility for the rural hold-harmless provision.

Response: Under section 1886(d)(8)(E) of the Act, as added by section 401 of the BBRA 1999, if a hospital submits an application and meets certain criteria, the Secretary treats the hospital as being located in a rural area for purposes of section 1886(d) of the Act. Under section 1833(t)(13) of the Act, as added by section 401(b) of the BBRA 1999, if a hospital is treated as being located in a rural area under section 1886(d)(8)(E) of the Act, then the Secretary shall treat the hospital as being located in a rural area for purposes of the outpatient prospective payment system. Therefore, if a hospital is treated as being located in a rural area under section 1886(d)(8)(E) of the Act, then the hospital is treated as a rural hospital for purposes of the hold-harmless provision.

Comment: One commenter stated that the 2-month waiting period for interim transitional payments may adversely affect a large number of small rural hospitals. The commenter also believed these hospitals will require a higher interim payment than planned. The commenter asked that we use a hospital-specific impact analyses to create a process for interim payments for these small rural hospitals that would begin concurrently with the start of the prospective payment system.

Response: In order to calculate interim transitional corridor payments for any hospital, we needed to have some amount of claims that had been processed under the prospective payment system. For this reason, we were not able to begin transitional corridor payments concurrently with the implementation of the prospective payment system. Because of our concerns discussed earlier about having to initiate recoupment procedures in cases of overpayments, we are not increasing interim payments at this time. However, as cost reports are settled and we are able to determine how well interim payments predict final transitional corridor payments, we will be able to reevaluate this policy.

i. Covered Charges

Comment: Several commenters asked that we clarify the definition of ''covered charges'' used to compute the rural hold-harmless transitional corridor payment. One commenter stated that total procedures and thus the hold-harmless payment will be understated should we eliminate from these calculations the charges for incidental procedures or procedures that the Outpatient Code Editor consolidates into the main procedures.

Response: In the preamble and the regulation text of the April 7, 2000 final rule with comment period, we refer to ''covered hospital outpatient services'' to describe the services that are paid under the prospective payment system and, therefore, subject to the transitional corridor provision. To determine a provider's costs for purposes of calculating the pre-BBA amount for both interim payments and for final cost report settlement, we will take into account all costs encompassed under the prospective payment system, including the cost of incidental services that are packaged into the APC rate. These services are identified as those having HCPCS codes with a status indicator of ''N'' (as listed in Addendum B) and incidental services that may not be billed with HCPCS codes, but which are billed under revenue codes that indicate a packaged service such as observation services, recovery room, supplies and many drugs.

Comment: One commenter asked us to clarify how charges for packaged services, for example observation services, should be billed when they are

the only service provided. The commenter stated that inclusion of charges for these packaged services in the total bill charges are necessary to calculate the proper transitional corridor payment.

Response: Packaged services will not be the only items that appear on a bill. Packaged services will appear on a bill with the service to which they are incidental. For example, observation services are properly billed with the clinic visit, emergency room visit, surgery, etc., that results in the need for the incidental observation service.

j. Cancer Hospitals and Transitional Corridor Payments

Comment: Several commenters believed that the process described in Program Memorandum Transmittal No. A–00–23 for calculating the hold-harmless transitional corridor payments should be revised because it does not reflect Congressional intent and will not provide the relief to the 10 cancer centers that the Congress intended. These commenters contended that the method described in the program memorandum for calculating the transitional corridor payments will result in a 22 percent loss in outpatient patient revenues for the cancer centers compared to those received in 1998. The commenters further claimed that their revenue losses under the new outpatient prospective payment system may increase an additional 2 percent, or 24 percent in total, because we will not pay claims for any medical visits that are billed in conjunction with related significant procedures.

In addition, these commenters urged us to:

- Establish an appeal process for providers with cash flow problems that would permit fiscal intermediaries to adjust a provider's cost-to-charge ratio ''to rectify ongoing OPPS losses prior to reconciliation.''
- Reduce interim payments to the 10 cancer centers by only 5 percent rather than 15 percent. (The commenters contended that this approach would be consistent with the method currently used to determine their inpatient interim payments under the TEFRA cost limits system.)
- Pay the 10 cancer centers the balance of the hold-harmless payments due at the time the cost report is subjected to desk review rather than at the time it is settled. (The commenters stated that settlement of the centers' cost reports is completed within 2 to 4 years after a completed cost report is filed, whereas the cost report desk review is generally completed 90 days after it is filed.)

Response: Medical visits may be billed with significant procedures as long as the medical visit is a separate and distinct service from the significant procedure, even though the significant procedure is related to the medical visit. For example, as a result of an examination performed as part of a clinic or emergency room visit, a patient is determined to need a CT scan or MRI, or as a result of a dermatology examination performed as a clinic visit, a patient also has a surgical procedure to remove a mole. In these types of situations, payment will be made for both a medical visit and a significant procedure.

Program Memorandum Transmittal No. A–00–63 provides for adjustment of a provider's cost-to-charge ratio in certain specific situations. In the future, in order to reflect changes in hospital costs and charges, we will allow fiscal intermediaries to make additional updates of a provider's cost-to-charge ratio to ensure that interim payments accurately reflect our best estimates of final transitional corridor payments.

Although we limited the interim payment to 85 percent of the estimated payment in order to minimize the risk of overpayment, in the future, as cost reports are settled and we are able to determine how well interim payments predict final transitional corridor payments, we will be able to reevaluate this aspect of our interim payment policy and we will consider permitting modification of payment-to-cost ratios to reflect particular circumstances.

The statute indicates that interim payments are made subject to retrospective adjustments based on settled cost reports. However, it is current practice that, depending on the provider's specific situation, a fiscal intermediary may make additional payments as part of a tentative settlement action prior to final settlement of the cost report.

k. Teaching Hospitals and Transitional Corridor Payments

Comment: One commenter urged that we retain the transitional corridor payments permanently for major teaching hospitals.

Response: Section 1833(t)(7) of the Act provides permanent transitional corridor payments only for cancer hospitals described in section 1886(d)(1)(B)(v) of the Act. As indicated earlier, we will monitor and evaluate the prospective payment system payments and will consider whether it would be appropriate to recommend that Congress extend transitional corridor payments.

Comment: One commenter stated that while the transitional corridor payments will mitigate some of the losses to teaching hospitals under the prospective payment system compared to the former cost-based payment system, these payments are temporary. The commenter believed that we underestimated the losses that some teaching hospitals will experience. Another commenter urged us to monitor closely the impact of the prospective payment system on major teaching hospitals during the 3½ year transitional corridor payments. The commenter believed that these hospitals will require a payment adjustment after the transitional corridor payment period expires to mitigate their potential financial losses under the prospective payment system.

Response: As we stated in the preamble of the April 7, 2000 final rule with comment period, we will perform further comprehensive analyses of cost and payment differences between different classes of hospitals as soon as there is a sufficient amount of claims data submitted under the prospective payment system. We will use data from the initial years of the prospective payment system to conduct regression and simulation analyses. In addition, we will carefully track and analyze the additional payments made to hospitals under the transitional corridor provision. These analyses will be used to consider and possibly propose adjustments in the system, particularly beginning in 2004 when the transitional corridor provisions expire.

13. Limitation on Coinsurance for a Procedure

In the April 7, 2000 final rule with comment period (65 FR 18488), we specified that, in accordance with section 1833(t)(8) of the Act (as amended by section 204(a) of the BBRA 1999), the coinsurance amount for a procedure performed in a year cannot exceed the hospital inpatient deductible for that year. We specified that we would apply the limitation to the wage-adjusted coinsurance amount (not the unadjusted coinsurance amount) after any Part B deductible amounts are taken into account. Therefore, although the unadjusted coinsurance amount for any APC may be higher or lower than the inpatient hospital deductible, the actual coinsurance amount for an APC, determined after any deductible amounts and adjustments for variations in geographic areas are taken into account, will be limited to the Medicare inpatient hospital deductible. Any reduction in coinsurance that occurs in applying the limitation will be paid to

hospitals as additional program payments.

Comment: One commenter disagreed with our interpretation of the BBRA 1999 provision that amended section 1833(t)(8) of the Act to limit the coinsurance amount for a procedure to the amount of the inpatient hospital deductible. The commenter believed that our interpretation that applies the limitation to coinsurance on an APC by the APC basis is too narrow.

The commenter concluded that, at a minimum, the limitation should be more broadly interpreted to apply to the total coinsurance incurred by a beneficiary in connection with an outpatient visit, that is, from the time the beneficiary walks into an outpatient department until he or she is released. However, to implement the provision as envisioned by the Congress, the commenter suggested that we also consider developing a service period unit for outpatient procedures that is similar to the ''spell of illness'' concept used to define the set of services to which a single inpatient hospital deductible applies. Therefore, when a patient comes to an outpatient department for treatment of a particular condition, his or her coinsurance liability for all the services required for that condition should not exceed the inpatient hospital deductible. The commenter recommended that we apply the limitation regardless of how many or which APCs are billed or the number of visits required for such treatment.

Response: APCs are based on CPT codes. We believe that the most plausible meaning for ''procedure'' in this context is a CPT code or, by extension, an APC. Thus we interpret the limitation of coinsurance for a procedure in section 1833(t)(8)(C) of the Act as added by section 204 of the BBRA 1999 to apply in general to APCs.

We do not believe that it was the intent of the Congress to apply the coinsurance limitation to the beneficiary's aggregate coinsurance amounts for all outpatient services received during the entire service period for a specific condition or even to the services a beneficiary receives in one day. During the Congressional committee deliberations on this provision before it was enacted, we held technical discussions with committee staff. At their request, we identified the specific 10 APCs in the September 1998 proposed rule that would be likely to have a coinsurance that exceeded the inpatient hospital deductible. The Congressional Budget Office also used that information to project the cost of this statutory provision. Therefore, we believe that our interpretation in the April 7, 2000 final rule with comment period of how the coinsurance limitation is to be applied is consistent with the intent of Congress.

Comment: Several commenters pointed out that because APCs for drugs and biologicals are defined based on HCPCS codes for the lowest unit of the drug or biological, if we intend to apply the inpatient deductible limit at the APC level, we might disadvantage beneficiaries who receive multiple units. For example, the coinsurance for a specific drug APC may not exceed the inpatient deductible amount. However, if multiple units of the same drug are administered, the coinsurance based on the multiple APCs may, in fact, exceed the inpatient deductible. The commenters believed that the total coinsurance amount for a drug or biological based on the amount administered should be subjected to the inpatient deductible limit. The commenters believed that constructing APCs for drugs based on the lowest unit of the drug is solely a payment convention and does not mean that each dose is a separate ''procedure.'' Therefore, the commenters contended, a better reading of the statute is that the administration of a drug or biological, regardless of the dose, is one procedure for purposes of applying the hospital outpatient prospective payment system and it would be inappropriate to compare the inpatient deductible limit to anything but the total coinsurance amounts.

Response: In the case of services that involve the administration of drugs and biologicals in separate APCs, we have concluded that we should apply the limitation on coinsurance to include both the drug or biological (in whatever units it is administered) and the service that leads to its administration. We constructed separate APCs for drugs and biologicals, and established pricing on the basis of the lowest dose, not to reflect CPT codes, but solely as a matter of convenience in administering the payment system. Consequently, we think that the interpretation with the most clinical relevance in this instance is to treat a drug or biological and the service that leads to its administration as a single procedure. We had not proposed separate APCs for drugs and biologicals in the proposed rule for the outpatient prospective payment system and the Congress did not know we would segment APCs at the time it passed the BBRA 1997.

Effective for drugs and biologicals furnished on or after January 1, 2001, when multiple units of a drug or biological are furnished to a beneficiary during one day, resulting in multiple APC payments for the same drug, we will aggregate the total coinsurance applicable to the drug or biological, and the aggregated amount cannot exceed the inpatient hospital deductible for the calendar year. In order to accomplish this change in our bill processing systems, we are assigning a new status indicator designated as ''K'' to APCs for nonpass-through drugs and biologicals (as reflected in Addendum D of this interim final rule with comment period). Effective for services furnished on or after July 1, 2001, in the same circumstances, we will aggregate the total coinsurance applicable to the drug or biological and to the service that resulted in the administration of the drug, and the aggregated amount cannot exceed the inpatient hospital deductible for the calendar year. We are unable to make the latter provision effective earlier because of systems constraints.

Comment: One commenter stated that the BBRA 1999 requirement that coinsurance for a procedure cannot exceed the inpatient hospital deductible for that year adds confusion to an already complicated formula for determining coinsurance. The commenter stated that the monitoring of coinsurance needed to ensure the limitation is being applied on a procedure basis will add undue burden and increase a provider's costs. To make the hospital outpatient prospective payment system less complicated, the commenter believed that we should consider eliminating the threshold.

Response: The coinsurance limitation is required by statute. Therefore, a statutory change would be required to eliminate this provision.

14. Reclassification of Certain Hospitals

In the August 1, 2000 **Federal Register** (65 FR 47029), we implemented section 401 of the BBRA 1999 for the hospital inpatient prospective payment system. Section 401(a) of the BBRA 1999, which amended section 1886(d)(8) of the Act by adding a new paragraph (E), directs the Secretary to treat any subsection (d) hospital located in an urban area as being located in the rural area of the State in which the hospital is located if the hospital files an application (in the form and manner determined by the Secretary) and meets certain statutorily specified criteria. Additionally, section 401(a) of the BBRA 1999 includes hospitals ''* * * located in an area designated by any law or regulation of such State as a rural area (or is designated by such State as a rural hospital).'' A hospital also may seek to qualify for reclassification premised on the fact that, had it been located in a

rural area, it would have qualified as a rural referral center or as a sole community hospital.

Section 401(b) of the BBRA 1999 made a conforming change to section 1833(t) of the Act. Specifically, section 401(b) added section 1833(t)(13) to the Act which provides that if a hospital is being treated as being located in a rural area under section 1886(d)(8)(E) of the Act (for purposes of section 1886(d) of the Act), the hospital will also be treated under section 1833(t)(13) of the Act as being located in a rural area.

In the April 7, 2000 final rule with comment period, we explained that we use the same yearly version of the hospital inpatient prospective payment system wage index (which takes effect each October 1) to adjust the portion of the outpatient prospective payment system payment rate and the coinsurance amount that is attributable to labor-related costs for relative differences in labor and labor-related costs across geographic areas (and that will be applied effective each January 1). This wage index reflects the effects of hospital designations under section 1886(d)(8)(B) of the Act and hospital reclassifications under section 1886(d)(10) of the Act.

We did not receive any comments on this conforming change.

B. August 3, 2000 Interim Final Rule With Comment Period

Following are the issues addressed in the August 3, 2000 interim final rule with comment period, the public comments received on each issue, and our response to those comments. In that interim final rule, we—

- Revised the regulation at § 419.43(e)(1)(iv) to change one criterion and postpone the effective date for two other criteria that a new device, drug, or biological must meet in order for its cost to be considered ''not insignificant'' for purposes of determining its eligibility for transitional pass-through payments;
- Changed our interpretation for three of the eight criteria set forth in the April 7, 2000 final rule with comment period for defining a new medical device that would be eligible for transitional pass-through payments and amended § 419.43 by adding new paragraph (e)(4) to include all eight criteria;
- Clarified the assignment of ''C'' codes to eligible pass-through items;
- Corrected a trigger date for grandfathering of provider-based FQHCs; and
- Clarified our intent regarding prior notice of beneficiary cost-sharing liability in emergency situations.

1. Transitional Pass-Through Provisions

a. ''Not Insignificant'' Cost Criteria

Section 1833(t)(6) of the Act, as added by section 201(b) of the BBRA 1999, requires the Secretary to make transitional pass-through payments for post-1996 new drugs, biologicals, and devices for at least 2 but no more than 3 years when the cost of the item is ''not insignificant'' in relation to the hospital outpatient prospective payment system payment amount. In the April 7, 2000 final rule with comment period, we established three criteria that a new device, drug, or biological must meet to determine whether its costs are not insignificant relative to the APC payment with which the item is associated (65 FR 18480–81). We stated that all of the following cost criteria must be satisfied in order for a new device, drug, or biological to be eligible for transitional pass-through payments:

- Its expected reasonable cost exceeds the applicable fee schedule amount determined to be associated with the drug, biological, or device by 25 percent.
- The expected reasonable cost of the new drug, biological, or device exceeds the portion of the fee schedule amount determined to be associated with the drug, biological, or device by 25 percent.
- The difference between the expected, reasonable cost of the item and the portion of the hospital outpatient department fee schedule amount determined to be associated with the item exceeds 10 percent of the applicable hospital outpatient fee schedule amount.

After we published the April 7, 2000 final rule with comment period, we gained considerable experience from reviewing applications for transitional pass-through payments. Based on that experience, we concluded that the 25-percent limitation was too restrictive and could result in limiting Medicare beneficiaries' access to new products. Therefore, in the August 3, 2000 interim final rule with comment period, we changed that criterion to ensure that Medicare beneficiaries would continue to have access to the latest technologies. We now require that the expected reasonable cost of a new drug, biological, or device must exceed 10 percent of the applicable fee schedule amount for the associated service. In addition, we also postponed the effective date of the other two criteria applying to a new device, biologicals, or drugs for which a transitional pass-through payment is first made to on or after January 1, 2003. As stated in the August 3, 2000 interim final rule with comment period, the delay in the effective date for these two criteria is necessary so that we will have sufficient time to gather and analyze data needed to determine the current portion of the fee schedule amounts associated with a device, drug, or biological, which is an essential factor in applying these criteria.

Comment: Several commenters commended us for revising the one ''not insignificant'' criterion and postponing the other two criteria until after December 31, 2002. However, some argued that we created an uneven playing field by changing our policies after we published our April 7, 2000 final rule and announced pass-through application deadlines. They claimed that our untimely lowering of the cost threshold from 25 percent to 10 percent unfairly disadvantaged companies that did not submit pass-through applications by the deadline for our August 1, 2000 payments because they believed that their products would not qualify for payment. One commenter recommended that we rapidly process applications submitted for our January 1, 2001 update and change the effective date of that update to November 1, 2000. Another commenter advocated that we apply the 10-percent cost threshold retroactively to all device pass-through applications to ensure equitable treatment for all manufacturers.

Response: Based on our review of transitional pass-through applications, we believe that we have not applied our policy change inconsistently to applications that we received. The change to the lower cost threshold is effective for services furnished on or after August 1, 2000. If an applicant's product was denied pass-through status because its cost was considered to be ''not insignificant'' and that applicant can show that our decision was not based on the 10-percent criterion, the applicant may request that we reevaluate the application. In addition, we encourage other interested parties who withheld applications because they believed that their products would not qualify for pass-through status to submit them. Further, we cannot update the pass-through payments effective November 1, 2000 as requested. Adding new pass-through items to our outpatient prospective payment system requires changes to our complex Medicare computerized claims processing systems that we can make only at the beginning of a calendar quarter.

Comment: One commenter believed that reducing the cost threshold to 10 percent for new devices may be too low. The commenter stated that the lower

cost threshold would expose hospitals to financial risk created by the use of new and expensive technology furnished in providing patient care. The commenter advocated that we consider as an option ''establishing * * * a floor—or a variable percentage that is higher for low-cost cases and lower for high-cost cases.''

Response: We believe that this option will require time to evaluate its merits, assess its impact on our systems and determine systems changes that would be required to implement it. Therefore, we will consider this request for possible inclusion in our future proposed rule for outpatient prospective payment system updating that we expect to publish in the spring of 2001.

Comment: One commenter urged that we grant the public another opportunity to evaluate and comment on all three ''not insignificant'' cost criteria before implementing them.

Response: Before we implement all three of these criteria, we plan to provide notice and opportunity for public comment. Since we do not expect to implement two of these criteria before January 1, 2003, we would not expect to publish a proposed rulemaking until the spring of 2002.

Comment: One commenter asked how we would apply the three ''not insignificant'' cost criteria in instances when multiple units of a new device are used in performing a procedure. The commenter recommended that we use the ''weighted average cost of the product, based on the average number of unit used in a procedure.''

Response: We plan to fully describe our approach to implementing these three criteria in a future proposed rule. As previously stated, we will not implement two of these criteria before January 1, 2003. Therefore, we do not expect to publish a proposed rulemaking until the spring of 2002.

Comment: One commenter asked that we clarify how transitional pass-through payments will be incorporated into the APC payments at the end of the 2- to 3-year transitional period for a given device. The commenter also asked how we would prevent the cost for the pass-through items from being diluted significantly by the median cost of other procedures grouped in the same APC.

Response: We plan to use a methodology similar to that currently used to construct the APC groups to incorporate payment for pass-through items into the APC payments once their pass-through status expires. That is, we have assigned a unique HCPCS code to each eligible pass-through item that will allow us to track its payments and utilization over the 2 to 3 years that it is eligible for pass-through status. The codes will allow us to match the pass-through items to the specific procedures or medical visits with which they are used. After we gain appropriate information about the actual costs a hospital incurs to provide a pass-through item, we will package the cost for the pass-through with that for the relevant procedure or medical visit with which it is used and assign the packaged service to a clinically related APC group with comparable resources. We will limit the cost variation within each group as required by section 1833(t)(2) of the Act, as amended by section 201(g) of the BBRA 1999. In accordance with this provision, the items and services within a group cannot be considered comparable with respect to the use of resources if the highest median cost item or service within a group is more than two times greater than the lowest median cost item or service within the same group. By law, the Secretary is allowed certain exceptions to this requirement, that is, for low volume items and services.

Comment: One commenter asked if we would provide adequate recognition for multiple devices used in a procedure ''if multiple procedure discounting is allowed to cut the pass-through generated recognition of these costs in half.''

Response: Under the hospital outpatient prospective payment system, devices eligible for pass-through payments are paid separately and not subject to the multiple procedure discounting policy. This policy applies only to the actual surgical procedure that is performed to implant the pass-through device. These procedures are denoted by a status indicator ''T'' and listed in Addendum B of this rule.

Comment: One commenter urged us to correct erroneous APC groupings more frequently than during our scheduled quarterly or annual update cycles until we stabilize the hospital outpatient prospective payment system.

Response: We understand the importance of paying appropriately for services billed under our new outpatient system and are committed to resolving problems that would preclude us from making appropriate payments in a timely manner. However, because of the complexity of our system we cannot commit to making changes other than during the scheduled updating cycles.

b. Definition of Medical Device

In the April 7, 2000 final rule with comment period, we established eight specific criteria that new or innovative medical devices must meet to be considered eligible for pass-through payments under section 1833(t)(6) of the Act. We stated in that rule that new or innovative medical devices must meet all of the following criteria to be considered eligible for transitional pass-through payments:

(1) They were not recognized for payment as a hospital outpatient service prior to 1997.

(2) They have been approved or cleared for use by the FDA.

(3) They are determined to be reasonable and necessary for the diagnosis or treatment of an illness or injury or to improve the functioning of a malformed body part, as required by section 1862(a)(1)(A) of the Act. We recognize that some investigational devices are refinements of existing technologies or replications of existing technologies and may be considered reasonable and necessary. Therefore, we indicated that we will consider devices for coverage under the hospital outpatient prospective payment system if they have received an FDA investigational device exemption (IDE) and are classified by the FDA as Category B devices. However, in accordance with regulations at § 405.209, payment for a nonexperimental investigation device is based on, and may not exceed, the amount that would have been paid for a currently used device serving the same medical purpose that has been approved or cleared for marketing by the FDA.

(4) They are an integral and subordinate part of the procedure performed, are used for one patient only, are surgically implanted or inserted, and remain with that patient after the patient is released from the hospital outpatient department.

(5) The associated cost is not insignificant in relation to the APC payment for the service in which the innovative medical equipment is packaged.

(6) They are not equipment, instruments, apparatuses, implements, or items for which depreciation and financing expenses are recovered as depreciable assets as defined in Chapter 1 of the Medicare Provider Reimbursement Manual (HCFA Pub. 15–1).

(7) They are not materials and supplies such as sutures, clips, or customized surgical kits furnished incident to a service or procedure.

(8) They are not materials such as biologicals or synthetics that may be used to replace human skin.

In the August 3, 2000 rule, we revised criteria (3), (4), and (7) and amended § 419.43(e)(4) to include all eight criteria. We stated in that rule that our change in policies reflects experience

gained in reviewing and processing transitional pass-through applications for devices since publishing our April 7, 2000 final rule with comment period. With regard to criteria (3), we revised it by removing the cost limitation provision for IDE Category B devices that qualify for transitional pass-through payments. We explained in the August 3, 2000 interim final rule that on review of our policy for such new devices, we believed that it would be more appropriate to remove the cost limitation because they are subjected to the same eligibility requirements as any other device applying for pass-through status and because pass-through payments for a specific device are temporary.

For criteria (4), we modified our interpretation of which devices are eligible for transition pass-through payments to include new medical devices that are used for one patient only, are single use, come in contact with human tissue, and are surgically implanted or inserted in a patient during a procedure but may also be removed during that procedure so that the patient leaves the hospital without the device. Our revised interpretation also includes clips that are used as radiological site or tissue markers.

As explained in the August 3, 2000 interim final rule, it became apparent, based on experience gained in processing a large number of applications for new medical device pass-through status, that our attempt to distinguish implantable devices using the criteria we had outlined in our April 7, 2000 final rule with comment period had some practical limitations. We also explained that, in some instances, the new medical device is implanted temporarily rather than permanently as indicated in our original policy published in the April 7, 2000 final rule with comment period. However, we did not intend for our policy to exclude new medical devices that are implanted or inserted during a procedure but also may be removed during that procedure so that the patient leaves the hospital without the device. Rather, we believed that these devices should be considered for pass-through payments because they also are implantables. We further stated in the August 3, 2000 interim final rule with comment period that it had become apparent that some implantable clips are expensive and function other than as tools or supplies necessary for a surgeon to perform a surgical procedure. We did not intend to exclude such clips from consideration for pass-through payments. Therefore, we revised our interpretation of which devices are eligible for transitional pass-through status to include also new single use medical devices that may be temporarily implanted or inserted in a patient.

Finally, in criterion (7), we became aware of the need, based on our review of pass-through applications, to clarify that supplies include pharmacological imaging and stressing agents, including contrast media but excluding radiopharmaceuticals (for which payment under the transitional pass-through provision is established by section 1833(t)(6)(A) of the Act).

Comment: One commenter urged that we issue detailed guidelines that clarify whether an IDE Category B device with pass-through status will be assigned only one ''C-code'' for both its clinical investigation and commercialization.

Response: Our general policy is to assign only one code to an eligible pass-through item.

Comment: One commenter asked how we would reconcile differences in pass-through payment differences (over 2 to 3 years) that are made for an eligible IDE Category B device during its clinical investigation phase versus those paid once the device is commercialized.

Response: Policy decisions regarding the analytical treatment of costs associated with specific items that will be included in our database for constructing APCs will be made in the context of the methodology that we use to derive updated APC weights and payments. This methodology will be fully described in a subsequent proposed rule prior to incorporating the cost for pass-through devices such as eligible IDE Category B devices into our APC payments.

Comment: One commenter asked that we clarify when the definition of a device includes or excludes all of a device's components. The commenter also asked whether we assigned separate codes for the device's components.

Response: If a device can be separated into distinct components and such components are considered integral to the functioning of that device, we evaluate the device and all its component parts to determine whether any or all would qualify for transitional pass-through payment. For example, we have approved several implantable neurostimulator systems for pass-through payment. These systems usually include at least two or three separate components such as a generator, leads, and receiver/transmitter. In this case, we have assigned separate HCPCS codes to each of the eligible components. However, if an eligible pass-through item is considered a component of a non-eligible item, such as a piece of capital equipment, only the eligible item will receive a HCPCS code to bill for pass-through payments.

Comment: One commenter warned us about medical devices that we have approved for pass-through payments such as electrophysiology catheters that the commenter alleges are not single use items. The commenter stated that hospitals use them more than once. The commenter advocated that we advise hospitals not to request additional payments for any approved pass-through item if they reprocess or reuse them.

Response: In the August 3, 2000 interim final rule with comment period, we revised criterion ''d'' of the eight medical device eligibility criteria to explicitly preclude pass-through payments for new medical devices other than those that are single use. Therefore, additional payments will not be made for devices that are reprocessed or reused. Hospitals that bill these devices might be considered to be engaging in fraudulent billing practices.

Comment: A number of the commenters urged that we abandon the use of an individual or brand-specific approach to approving devices for transitional pass-through payments and adopt an approach that distinguishes devices based on categories. The commenters argued that a category approach is more appropriate and more efficient to implement than an individual, item-specific approach. They alleged that the latter approach creates winners and losers and delays timely approval of new technologies.

Response: As previously stated, we adopted a trade-name specific approach for several reasons. First, such an approach provides better information. Codes that are largely item-specific allow us to track what procedures the items are used with and costs of the items. When the pass-through payments for an item ends, we would expect to have good information for assigning it to relevant APCs and ensuring appropriate payment for these APCs. Adopting a scheme with a significant degree of categorization would require use of averages in making assignments and setting payment rates. Decisions based on these more limited data would likely lead to intensified concerns about the appropriateness of APC assignment and payment.

Second, this approach permits finer discrimination in eligibility decisions. An item-by-item approach allows us to be sure individual items in fact meet the criteria for eligibility. Of major concern in this instance is whether a device is ''new'' using the standard of the statute. Section 1833(t)(6)(A) of the Act limits

transitional pass-through payment to those devices for which '' * * * payment for the device * * * as an outpatient hospital service under this part was not being made as of December 31, 1996.'' Adopting categories would in some cases mix ''old'' and ''new'' devices. In these instances, either some old devices would get special treatment that they would not be eligible for if they were examined on an item-specific basis, or an entire category could be considered old, thus depriving some new devices from special treatment they would be eligible for if they were examined on an item-specific basis.

Third, an item-specific scheme avoids issues associated with the design of categories needed for purposes of transitional pass-through payments. It largely avoids concerns about what items should be in what category or whether new categories should be created to accommodate items that may appear to be little different from those in existing categories.

Fourth, an item-specific approach allows us to assure that a newly arriving device can obtain the full period of pass-through status it is arguably eligible for under the statute. A categorization approach would likely lead to latecomers being eligible for pass-through payments only for a shorter period. Insofar as revision to APC payment rates reflected the costs of items in the category by the time the category was terminated, the shorter period would be of little consequence. However, if the costs of the late-coming item were significantly higher, this procedure could appear objectionable. A solution in this case would be to create a new code, which could be specific to that item, thus departing from a categorization approach.

We recognize that a category approach would lessen concerns about competitive disadvantages that may have been inadvertently created by an item specific approach and about access to specific items by hospitals and their patients. However, we found no satisfactory way of establishing categories that would not run into difficulty regarding the test of whether a device is ''new'' as described above. Consequently, we are making no change in our approach in response to comments.

2. Revision to Grandfather Provision for Certain FQHCs and ''Look-Alikes''

In the April 7, 2000 final rule with comment period, which discussed the provider-based status criteria and requirements, we grandfathered FQHCs or ''look-alikes'' that were designated as such before 1995 in order to assure the continuity of care and access to care for patients of some of these facilities. To meet our original policy intent of helping to ensure that the new criteria do not disrupt the delivery of services to patients of these facilities, in the August 3, 2000 interim final rule with comment period (65 FR 47674), we corrected § 413.65(m) to state that a facility that has since April 7, 1995 furnished only services that were billed as if they had been furnished by a department of a provider will continue to be considered as a department of a provider, without regard to compliance with the provider-based criteria, if the facility—

(1) Received a grant on or before April 7, 2000 under section 330 of the Public Health Service Act and continues to receive funding under such a grant, or is receiving funding from a grant made on or before April 7, 2000 under section 330 of the Public Health Service Act under a contract with recipient of such a grant, and continues to meet the requirements to receive a grant under section 330 of the Public Health Service Act; or

(2) Based on the recommendation of the Public Health Service, was determined by HCFA on or before April 7, 2000 to meet the requirements for receiving a grant under section 330 of the Public Health Service Act, and continues to meet such requirements. We made this change to clarify that grandfathering under § 413.65 is based on continued status as a section 330 of the Public Health Service Act grantee or a ''look-alike'' facility. We received no comments on this change.

3. Clarification of Notice of Beneficiary Cost-Sharing Liability

In the August 3, 2000 interim final rule with comment, we also addressed whether hospitals could reasonably be expected to furnish an exact statement of the patient's financial liability, since the exact scope of services needed may not be known at the time notice must be given. Specifically, we stated that when the extent of care needed is not known before the patient is admitted, the hospital may furnish a written notice to the patient that explains the general fact that the beneficiary will incur a coinsurance liability to the hospital that he or she would not incur if the facility were not provider based. Furthermore, we clarified that the estimate of ''potential financial liability'' in this written notice may be based on typical or average charges for visits to the facility or organization, while stating that the patient's actual liability will depend upon the actual services furnished by the hospital.

Comment: One commenter stated that our clarification regarding the notice of beneficiary cost sharing liability was helpful, but recommended that we amend or modify the regulations at § 413.65(g)(7) to reflect such clarification since the wording of the existing regulations states twice that the notice must be given ''prior to the delivery of services'' without an exclusion for emergency medical conditions. In addition, the regulation states that the hospital has an obligation to notify the beneficiary of the ''potential financial liability'' not just to provide the beneficiary with ''an estimate based upon typical or average charges'' in the event that the exact type and extent of care is not known.

The commenter also recommended that we require hospitals to only notify the beneficiary of the fact that the beneficiary will incur a coinsurance liability for hospital outpatient services without giving a dollar amount of beneficiary copayment. Such a notice could include a statement that the copayment liability will be determined by us and the beneficiary will be notified of the exact amount once the hospital is notified of the amount determined by us. The commenter believes that an estimate based on charges would ''miss the point'' of this provision since beneficiary copayment amounts are now determined by HCFA using an APC grouper, not charges.

Response: We appreciate the commenter's concerns and agree that a change in the regulations is needed to reflect the clarification provided in the August 3, 2000 interim final rule with comment period in a future proposed rule. As we stated in the August 3, 2000 interim final rule with comment period (65 FR 47675), we are developing a proposed rule that will further revise and clarify the notice requirements. We are doing this to allow the public a full opportunity to comment on the changes and to ensure that we have the benefit of all relevant comments.

We disagree with the commenter's statement that an estimate based on charges would ''miss the point'' of this provision since such a notice is required only to give the beneficiary an idea or an example of their ''potential financial liability''. As stated in the August 3, 2000 interim final rule with comment period (65 FR 47675), the estimate should state that the beneficiary's ''actual liability will depend upon actual services furnished by the hospital.'' Also, with the delay in the effective date of the provider-based status regulations until January 10, 2001, hospitals will have at least five months of experience with APC

payments under outpatient prospective payment system and should be able to develop an appropriate estimate of a copayment amount based on APCs rather than charges.

4. Clarification of Protocols for Off-Campus Departments

In the April 7, 2000 final rule, under new § 489.24(i)(2) we require hospitals to establish protocols for handling individuals with potential emergency conditions who arrive at hospital off-campus departments. Section 489.24(i)(2)(ii) further requires that if the off-campus department is a physical therapy, radiology, or other facility not routinely staffed with physicians, RNs, or LPNs, the department personnel must be given protocols that direct them to contact emergency personnel at the main hospital campus.

In the August 3, 2000 interim final rule with comment period, we clarified that § 489.24(i)(2) does not require a delay of an appropriate transfer when the main hospital campus does not have the specialized capability or facilities required by the individual or when the individual's condition is deteriorating so rapidly that the time needed to move the individual to the main hospital campus would significantly jeopardize the individual's life or health. We also stated that the contact with emergency personnel at the main hospital campus should be made either after, or concurrently with, the actions needed to arrange an appropriate transfer under § 489.24(i)(3)(ii), if doing otherwise would significantly jeopardize the individual's life or health. We noted that this clarification does not relieve the off-site department of the responsibility for making this contact, but only clarifies that the contact may be delayed in specific cases when doing otherwise would endanger a patient subject to EMTALA protection. We received no comments on this clarification.

5. Typographical Errors in the Provider-Based Regulations

Comment: One commenter questioned whether the provider-based regulations in §§ 413.65 and 489.24, as they appeared in the April 7, 2000 final rule with comment period (65 FR 18538), contained typographical errors.

Response: We are aware of typographical errors in the provider-based regulations as published in the April 7, 2000 final rule with comment period (65 FR 18538) and will be publishing a correction notice (HCFA–1005–CN) to make these corrections.

III. Provisions of This Interim Final Rule With Comment Period

A. Changes Relating to the BBRA 1999 Public Comments

Except for the changes discussed in the preamble, we are adopting the BBRA 1999 provisions implemented in the April 7, 2000 final rule with comment period and the August 3, 2000 interim final rule with comment period, described in section II of this preamble, as final without modification. We are making the following changes to the regulation text as a result of the public comments received:

We are revising § 419.41(c)(4)(i) to provide that, effective January 1, 2001, when multiple APCs for a single drug or biological are furnished to a beneficiary on the same day, the inpatient hospital deductible limitation on coinsurance will be applied to the aggregate coinsurance for the drug or biological. The section is further revised to provide that, effective July 1, 2001, the coinsurance amount for the procedure or service that resulted in the administration of the drug or biological will be aggregated with the coinsurance for the drug or biological in applying the limit.

We are revising § 419.70(f)(2)(ii) to remove the phrase ''without applying the cost reductions under section 1861(v)(1)(S) of the Act''. We recognize that the phase may have inadvertently caused confusion to the extent it is redundant, as pointed out by a commenter.

B. Annual Updates to Components of the Hospital Outpatient Prospective Payment System

In this interim final rule with comment period, for calendar year 2001, we are updating the wage index and the conversion factor adjustment for covered hospital outpatient services furnished beginning January 1, 2001. We also are updating the existing APC groups to reflect new codes that have been assigned. In accordance with section 1833(t)(9)(A) of the Act and section 201(h)(2) of the BBRA 1999, we will undertake a complete system update in 2001 for hospital outpatient prospective payments. That update will take effect on January 1, 2002. We will consult with an expert outside advisory panel composed of appropriate representatives of providers. This panel will review and advise us concerning the clinical integrity of the APC groups and relative weights. The panel will be allowed to use data other than those we have collected or developed during our review of the APC groups and relative weights.

1. APC Groups

We are updating the existing APC groups effective January 1, 2001 to reflect the addition of new CPT and alpha-numeric codes, the deletion of invalid codes, changes to the list of procedures we pay for only in an inpatient setting (the ''inpatient list''), the creation of a new status indicator, newly covered procedures, reconfigurations due to the inclusion of device costs, and revisions to correct errors and provide consistency in the placement of codes.

a. New Codes

There are 936 new codes, 645 of which are ''C'' codes. ''New'' in this context means new since the April 7, 2000 final rule with comment period was published. Many of the ''C'' codes were published in program memoranda over the intervening months. New codes are shown in Addendum B with an asterisk in the column preceding the code.

b. Deleted Codes

With the exception of ''C'' codes, codes deleted effective January 1 of each year are given a 3-month grace period in which they will still be recognized. ''C'' codes are temporary codes used exclusively to bill pass-through items and new technology services and items paid under the hospital prospective payment system. We will retire these codes prospectively at the start of a new calendar quarter based on specific service dates and are not extending the same 3-month grace period to them. We will drop all non ''C'' codes from APCs effective April l. Deleted codes are shown in Addendum B. They are followed by the letter D. The AMA's CPT books also list deleted codes.

c. Revisions to Correct Errors or Inconsistencies

We are revising the APCs in order to correct errors and to provide greater consistency in the placement of codes. For example, we had assigned various types of cardiovascular diagnostic tests to four APCs, with rates based on data that, on subsequent review, appeared limited. We are recategorizing these APCs. This recategorization results in three APCs with greater clinical coherence.

Medicare covers influenza, pneumococcal, and hepatitis B immunizations routinely, with no copayment or deductible due for flu and pneumonia vaccines or their administration. Other vaccines may be covered in certain circumstances, but are, in fact, given so infrequently that our cost data are limited. We are

rearranging the preventive vaccines and assigning the less frequently furnished vaccines based on their reported costs, but within a smaller range. We expect very few immunizations other than influenza and pneumonia to be billed, but if they are billed, we will update our data.

We also are changing the APCs to which bone density studies are assigned. The codes used in 1996 captured both central and peripheral bone density studies. Coding changes since that time have separated the two types of studies, but this distinction was not reflected in the 1996 data. In order to better reflect these differences, we are separating the various codes and assigning central dual energy x-ray absorptiometry (DEXA) bone density studies to a new technology APC.

We did not include the codes for transfusion laboratory services (for example, typing and crossmatching) in APCs in the April 7, 2000 final rule with comment period. We are now creating three APCs to capture these codes, and an additional APC to capture fertility procedures.

d. Device-Related Codes

As described in the April 7, 2000 final rule with comment period, revenue centers 274, 275, and 278 were not included for purposes of calculating the APC rates because prior to the BBRA 1999, we anticipated paying for durable medical equipment and prosthetics (including implantable devices) outside of the outpatient prospective payment system and it was unfeasible to revise our database to reflect the revenue centers in time to publish a final rule and implement the prospective payment system by July 1, 2000. To reflect the inclusion of implantable devices as required under the BBRA 1999, we have recalculated APC rates with these revenue centers included. As a result, the median cost for certain procedures such as inserting pacemakers, replacing leads, and providing neurostimulators increased significantly.

In order to recognize these cost increases, which are attributable to the devices, and to aid in the assignment of devices to APCs at the end of the pass-through period, we are reconfiguring certain APCs. That is, we are creating APC groups for the insertion of pacemakers, the replacement of pacemaker electrodes, the implantation of a pacemaker and electrodes, and the removal of a pacemaker. These changes reflect our basic criteria that procedures within an APC group be clinically similar and comparable in terms of resources, with the highest cost item or service within a group being no more than 2 times greater than the lowest cost item or service within the same group.

e. Inpatient Codes Moved to the Outpatient Setting

In response to numerous requests, we reviewed the composition of the inpatient list. While we continue to believe that we have the majority of the codes assigned properly, for the reasons discussed in section III.B.2. we are persuaded to move a number of codes to the outpatient setting. We are able to place most codes into closely related APCs.

f. ''Two-times'' Rule

The BBRA 1999 required us to ensure that no APC contains codes such that the highest median cost in the APC exceed twice the lowest median cost. We undertook an analysis of APCs in relation to this requirement as part of the 2001 update. (Note that the law provides for exceptions based on low volume and other reasons. We consider a code that captures fewer than 2 percent of the services within an APC to be low volume, and we disregard codes for unlisted services or procedures, since we do not know what service or procedure was billed.) For example, moving a radical mastectomy code from the inpatient list to a breast procedure APC caused the group to fail the two-times test. In another instance, as described above, we packaged costs associated with implantable devices into the relevant procedure codes. This change would also cause device-related APCs to fail the two-times test. For these situations and others that failed the two-times test, we are reconfiguring the APCs appropriately.

g. Inpatient Codes Moved to Outpatient and Affected by Device

Seven codes related to vascular and neurological procedures were moved from the inpatient list into APCs, that were then split according to device use, in response to comments.

h. Newly Covered Codes

The updated APCs reflect recent HCFA decisions to provide Medicare coverage for an electrical bioimpedance procedure and three magnetic resonance angiography services. The codes for these newly covered services are M0302 and 71555, 73725, and 74185, respectively.

i. Pass-Through Requests for Drugs

Since publication of the April 7, 2000 final rule with comment period, we have received additional requests for pass-through status for a number of drugs. The codes for the additional eligible pass-through drugs are shown in Addendum B.

The following table contains a listing of the changes in the APC groups discussed above.

SUMMARY OF CHANGES TO APCS

New Codes	Changes to APC Placement of Existing Codes						
	Revisions or corrections of errors	Device-related codes	Inpatient moved to outpatient	''Two-times'' rule	Inpatient codes moved to outpatient and affected by device	Newly covered codes	Pass-through requests for drugs
936 codes added, 645 of which are ''C''.	111 codes changed.	87 codes changed.	56 codes changed (12 as of 8/1/2000).	25 codes changed.	7 codes changed.	4 codes changed.	4 codes changed

SUMMARY OF CHANGES TO APCs—Continued

New Codes	Changes to APC Placement of Existing Codes						
	Revisions or corrections of errors	Device-related codes	Inpatient moved to outpatient	''Two-times'' rule	Inpatient codes moved to outpatient and affected by device	Newly covered codes	Pass-through requests for drugs
Denoted by asterisk in Addendum B.	APCs—0004, 0087, 0099, 0100, 0102, 0123, 0282, 0340, 0342, 0346, 0347, 0348, 0349, 0354, 0356, 0602, 0761, 0970, 0971, 0974, 0976, 1044, 1401, 1402, 1403, 1404, 1405, 1406, 1407, and 1409.	APCs—0082, 0083, 0089, 0091, 0093, 0103, 0104, 0105, 0106, 0107, 0108, 0109, 0115, 0119, 0124, 0185, 0224, 0225, 0226, 0227, 0228, 0229, 0256, and 1002.	APCs—0005, 0020, 0021, 0029, 0046, 0050, 0081, 0114, 0115, 0120, 0121, 0162, 0165, 0194, 0195, 0198 , 0216, 0254, 0256, 0263, 0264, 0279, 0280, 0970, 0974, and 0981..	APCs—0028 and 0029.	HCPCS—37620, 35011, 36834, 61880, 61888, 33284, 63741.	HCPCS—71555, 73725, 74185, M0302.	HCPCS—J1650, J2770, J1810, J7315

Addenda A and B reflect changes to the APC groups, effective January 1, 2001. Addendum C, entitled ''Hospital Outpatient Department (HOPD) Payment for Procedures by APC, Calendar Year 2001,'' is not published in this interim final rule with comment period, but will be posted on our website at http://www.hcfa.gov /medlearn/refopps.htm. Addendum C will display data similar to those contained in Addenda A and B, but sorted by APCs with each procedure code listed that is assigned to the APC.

2. Inpatient Procedures List Update

In the preamble to the April 7, 2000 final rule with comment period, we indicated that, as part of our annual update process, we would update the procedures on the inpatient list. The first annual revision of this list is effective on January 1, 2001. We are removing 44 procedures from the list and placing them in APCs. (Several procedures that were inadvertently left on the inpatient list in the April 7, 2000 final rule with comment period were removed from the list and placed in APCs in August 2000.) The revised list is included in Addendum E.

We have attempted to limit the inpatient only list to those procedures that, in current medical practice as understood by our clinical staff, require inpatient care, such as those that are highly invasive, result in major blood loss or temporary deficits of organ systems (such as neurological impairment or respiratory insufficiency), or otherwise require intensive or extensive postoperative care. Insofar as advances in medical practice mitigate concerns about these procedures being performed on an outpatient basis, we will be prepared to remove them from the inpatient list and provide for payment under the hospital outpatient prospective payment system. Since the April 7, 2000 final rule with comment period was published, we have received requests to move a number of procedures from the inpatient list because, based on medical evidence, the procedures can be performed safely in a hospital outpatient setting. These included breast and other cancer procedures, repairs of facial trauma, many orthopedic procedures, several vascular procedures, and some genito-urinary procedures.

Among the procedures we are removing from the inpatient list and placing in APCs as a result of these requests are excision of chest wall tumors, several orthopedic repairs, vascular procedures, and ureteral endoscopies. We are moving overnight pulse oximetry from the inpatient list to packaged status. We also are moving several comparable procedures, for example, related ureteral endoscopies.

At this time, we are not removing from the inpatient list various spinal procedures, including osteotomies and laminectomies. We also are not removing several open abdominal and retroperitoneal procedures from the inpatient list because many of these procedures involve prolonged invasion of the thoracic cavity, the peritoneum, or the retroperitoneal space. Patients undergoing these procedures typically require prolonged postoperative monitoring. Moreover, the information provided to us by requesters did not provide convincing evidence that these procedures are currently being performed or can be safely performed in an outpatient setting. However, we are aware that, with advances in technology and surgical techniques, many of these procedures may eventually be performed safely in a hospital outpatient setting. We will continue to review all the procedures on the inpatient list and will consider additional requests to move specific procedures to the outpatient setting. We ask that these requests contain detailed rationale along with medical evidence that the procedure may be performed safely in an outpatient setting.

We note that, in some instances, requests for removing a particular procedure from the inpatient list may have resulted from a misunderstanding about appropriate coding. Less invasive versions of the procedure on the inpatient list may be in an APC. The presence of certain thoracoscopies on the inpatient list, for example, does not mean that no thoracoscopy will be paid under the outpatient prospective payment system.

We also were asked to move several procedures from APCs to the inpatient list. Because of the rapid advance in technology and surgical techniques mentioned above, we believe that if procedures have been assigned APCs, we should not reverse that status unless it becomes obvious that we have made an error. Thus, we are moving to the inpatient setting only one of the codes for which we received a request (open treatment of a knee dislocation, which requires more than outpatient

postoperative monitoring), and two other codes (for nephrectomy with total ureterectomy and for escharotomy) that had been assigned APCs in error.

Beginning in April 2001, we will, if warranted, revise the inpatient list at least quarterly to better reflect changes in medical practice that permit procedures that were previously performed only in an inpatient setting to be safely and effectively performed in an outpatient setting. In the April 7, 2000 final rule with comment period, we discussed our intent to revise the list as part of the annual update of APCs and asked that interested parties advise us of procedures that can be performed in an outpatient setting. Since we will be making quarterly updates to the outpatient prospective payment system for other purposes, we will also change the inpatient list quarterly, if warranted. Generally, because of systems limitations, 3 months or more are required after a decision is made before we can implement a change.

The inpatient list was not a result of a provision of the BBRA 1999; it was included in the September 1998 proposed rule and we responded to comments and made the provision final in the April 7, 2000 final rule with comment. Accordingly, we did not request comments on our policy on the establishment of the inpatient list at that time. Nonetheless, we received a number of comments concerning the existence of this list, the provisions for updating it, and its implications for other Medicare payment systems. We will consider these comments and expect to discuss the matter further in the proposed rule updating the hospital outpatient prospective payment system for 2002, which we will publish in the spring of 2001.

3. Wage Index Adjustment

Under section 1833(t)(2)(D) of the Act, we are required to determine a wage adjustment factor to adjust, in a budget neutral manner, the portion of the payment rate and the coinsurance amount that is attributable to labor-related costs for relative differences in labor and labor-related costs across geographic regions under the hospital outpatient prospective payment system.

In the April 7, 2000 final rule with comment period, we specified, in regulations at § 419.43(c), that each year we use the hospital inpatient prospective payment system wage index established in accordance with 42 CFR Part 412 to make a wage adjustment for relative differences in labor and labor-related costs across geographic areas under the hospital outpatient prospective payment system. We note that, by statute, we implement the annual update of the hospital inpatient prospective payment system on a fiscal year basis. However, we update the hospital outpatient prospective payment system on a calendar year basis. Therefore, the hospital inpatient prospective payment system wage index values established for urban and rural areas and for reclassified hospitals published in the **Federal Register** on August 1, 2000 (65 FR 47149 through 47157) are being applied for wage adjustments under the hospital outpatient prospective payment system, effective January 1, 2001. The fiscal year 2001 hospital inpatient wage index reflects the effects of hospitals redesignated under section 1886(d)(8)(B) of the Act and hospital reclassifications under section 1886(d)(10) of the Act. After publication of the hospital inpatient wage index values for fiscal year 2001 on August 1, 2000, we discovered several errors in the values for several geographic areas. The correct wage index values for all areas are republished in Addenda F, G, and H of this interim final rule with comment period.

In this interim final rule with comment period, we are establishing the methodology that we will use in making adjustments for area wage differences for services furnished in the Virgin Islands. We note that a hospital inpatient prospective payment system wage index value is not calculated for the Virgin Islands because there are no hospitals located in that area that are paid under the inpatient hospital prospective payment system. Because the wage index that we adopted in our April 7, 2000 final rule with comment period does not include a value for adjusting wage differences for the Virgin Islands, we will use the wage index for the Virgin Islands as calculated for the skilled nursing facilities prospective payment system to make this adjustment. The skilled nursing facilities prospective payment system uses the inpatient hospital wage index data to adjust its prospective payment rates for the same fiscal year (that is effective October 1, 2000) as covered by the hospital inpatient prospective payment system wage index values. As stated in the July 31, 2000 skilled nursing facilities prospective payment system final rule (65 FR 46770), ''The computation of the wage index * * * incorporate[s] the latest data and methodology used to construct the hospital wage index. For these reasons, the wage index adjustment that we will apply to the Virgin Islands for services furnished on or after January 1, 2001 is 0.6306.

Although the wage index for skilled nursing facilities is based on a fiscal year beginning October 1, we will apply the wage index factor for the Virgin Islands that goes into effect on October 1 of each year to the hospital outpatient prospective payment system services furnished during the following calendar year. This is consistent with how we apply the hospital inpatient prospective payment system wage index values to the hospital outpatient prospective payment system services.

Consistent with the methodology applicable for services furnished in 2000 (on or after August 1, 2000), in making adjustments for area wage differences for services furnished in 2001, we will recognize 60 percent of the hospital's costs as labor-related costs that are standardized for geographic wage differences.

4. Conversion Factor Update

Section 1833(t)(3)(C)(ii) of the Act requires us to update annually the conversion factor used to determine APC payment rates. Section 1833(t)(3)(C)(iii) of the Act provides that the update be equal to the hospital inpatient market basket percentage increase applicable to hospital discharges under section 1886(b)(3)(B)(iii) of the Act, reduced by one percentage point for the years 2000, 2001, and 2002. Thus, the update to the outpatient hospital prospective payment system conversion factor for 2001 is 2.4 percent (3.4 percent minus 1 percent).

In accordance with section 1833(t)(9)(B) of the Act, the conversion factor for 2001 also has been adjusted to ensure that the revisions we made to update the wage index are made on a budget-neutral basis. A budget neutrality factor of .9989 was calculated for wage index changes by comparing total payments from our simulation model using the wage index values that will be effective January 1, 2001.

The market basket increase of 2.4 percent for 2001 and the required budget neutrality adjustment calculated to be .9989 result in a conversion factor for 2001 of $49.596.

IV. Waiver of Notice of Proposed Rulemaking

We ordinarily publish a notice of proposed rulemaking in the **Federal Register** and invite public comments on the proposed rule. The notice of proposed rulemaking includes a reference to the legal authority under which the rule is proposed, and the terms and substance of the proposed rule or a description of the subjects and

issues involved. This procedure can be waived, however, if an agency finds good cause that a notice-and-comment procedure is impracticable, unnecessary, or contrary to the public interest, and incorporates a statement of the finding and its reasons in the rule. For the reasons set forth below, we find that the circumstances surrounding this interim final rule with comment period make it either unnecessary or impracticable to pursue a notice-and-comment procedure before the provisions of this interim final rule with comment period take effect.

As discussed earlier in this interim final rule with comment period, we implemented the hospital outpatient prospective payment system on August 1, 2000 in accordance with the methodology that we set forth in the April 7, 2000 final rule with comment period (65 FR 18434). In section III.I. of the April 7, 2000 final rule with comment period (65 FR 18501), we discuss how we will update the outpatient prospective payment system on an annual basis. We are required under section 1833(t)(3)(C)(ii) of the Act to update annually the conversion factor used to determine the APC payment rates. Under the regulations, 42 CFR 419.43, the wage adjustment under outpatient prospective payment system is based on the hospital inpatient wage index, and we updated the hospital inpatient wage index after the publication of the April 7, 2000 final rule with comment period. Accordingly, in this interim final rule with comment period, we are updating the conversion factor and the wage index adjustment for covered hospital outpatient services furnished beginning January 1, 2001, using the methodology published in the April 7, 2000 final rule with comment period, for which we had previously received comments. We also are updating the existing APC groups to reflect new and deleted CPT codes for 2001 and reconfiguring certain APC groups using more recent data to ensure clinical integrity and consideration of resource use as required by section 1833(t)(8)(A) of the Act and as described in the April 7, 2000 final rule with comment period (65 FR 18456 and 18501). Because these various adjustments are being made in accordance with existing methodology as set forth in the April 7, 2000 final rule with comment period, we believe it is unnecessary to address them further through the notice-and-comment procedure.

In addition, we find good cause to waive prior notice-and-comment procedures with respect to the Virgin Islands wage index methodology because it would have been impracticable to undertake and complete notice-and-comment procedures on this issue in time for the Virgin Islands outpatient prospective payment system wage index value to be effective at the same time as the updated outpatient prospective payment system wage index values for all other areas.

Accordingly, we find good cause to waive the notice-and-comment procedure with respect to the annual update of the wage index values, conversion factor, and the APC groups. However, we are providing for a 60-day comment period as specified in the ''Dates'' section of this preamble.

II. Collection of Information Requirements

This document does not impose information collection and recordkeeping requirements. Consequently, it need not be reviewed by the Office of Management and Budget under the authority of the Paperwork Reduction Act of 1995.

VI. Regulatory Impact

A. General

We have examined the impacts of this interim final with comment period rule as required by Executive Order 12866, the Unfunded Mandates Reform Act of 1965, and the Regulatory Flexibility Act (RFA) (Public Law 96–354). Executive Order 12866 directs agencies to assess all costs and benefits of available regulatory alternatives and, if regulation is necessary, to select regulatory approaches that maximize net benefits (including potential economic, environmental, public health and safety effects, distributive impacts, and equity). A regulatory impact analysis (RIA) must be prepared for major rules with economically significant effects ($100 million or more annually).

Section 202 of the Unfunded Mandates Reform Act of 1995 also requires that agencies assess anticipated costs and benefits before issuing any rule that may result in an expenditure in any one year by State, local, or tribal governments, in the aggregate, or by the private sector, of $100 million. This final rule does not mandate any requirements for State, local, or tribal governments.

The RFA requires agencies to analyze options for regulatory relief of small businesses. For purposes of the RFA, small entities include small businesses, nonprofit organizations and government agencies. For purposes of the RFA, we consider all hospitals to be small entities. Individuals and States are not included in the definition of a small entity.

In addition, section 1102(b) of the Act requires us to prepare a regulatory impact analysis if a rule may have a significant impact on the operations of a substantial number of small rural hospitals. This analysis must conform to the provisions of section 604 of the RFA. With the exception of hospitals located in certain New England counties, for purposes of section 1102(b) of the Act, we define a small rural hospital as a hospital that is located outside of a Metropolitan Statistical Area (MSA) or New England County Metropolitan Area (NECMA). Section 601(g) of the Social Security Amendments of 1983 (Public Law 98–21) designated hospitals in certain New England counties as belonging to the adjacent NECMA. Thus, for purposes of the hospital outpatient prospective payment system, we classify these hospitals as urban hospitals.

B. Analysis for Changes in this Interim Final Rule with Comment Period

We implemented the outpatient prospective payment system on August 1, 2000 in accordance with the methodology published in the April 7, 2000 final rule with comment period. In section III.I. of the April 7, 2000 final rule with comment period (65 FR 18501), we discuss how we will update the outpatient prospective payment system on an annual basis. We are required under section 1833(t)(3)(C)(ii) of the Act to update annually the conversion factor used to determine the APC payment rates. We are required under section 1833(t)(8)(A) of the Act to revise not less often than annually the wage and other adjustments. Accordingly, in this interim final rule with comment period, we are updating the conversion factor and the wage index adjustment for covered hospital outpatient services furnished beginning January 1, 2001, using the methodology published in the April 7, 2000 final rule with comment period, for which we had previously received comments.

In section IX.B. of the preamble of the April 7, 2000 final rule with comment period, we gave our Office of the Actuary's projection of the additional benefit expenditures from the Medicare Part B Trust Fund resulting from implementation of the hospital outpatient prospective payment system and the hospital outpatient provisions enacted by the BBRA 1999. The impact of implementing the hospital outpatient prospective payment system on the Medicare program is reflected in the table below, which is republished from the April 7, 2000 final rule with

comment period (65 FR 18530). The calendar year 2001 increase in total payments to hospitals, which results primarily from the updated conversion factor, is already included as part of HCFA's current law baseline expenditures for hospital outpatient services under the outpatient prospective payment system.

Fiscal year	Impact (in millions)
2001	$3,030
2002	3,520
2003	4,230
2004	4,670

We also are updating the existing APC groups to reflect new and deleted CPT codes for 2001 and adjusting the groups to reflect more recent data as we described in the April 7, 2000 final rule with comment period. The provisions of this interim final rule with comment period do not measurably alter the effect of the outpatient prospective payment system on the groups of hospitals or geographic areas as projected in Table 2 of the April 7, 2000 final rule with comment period (65 FR 18533–18534).

C. Federalism

We have examined this interim rule with comment period in accordance with Executive Order 13132, Federalism, and have determined that it will not have any negative impact on the rights, roles, and responsibilities of State, local or Tribal governments.

D. Executive Order 12866 and 5 U.S.C. 804(2)

The statutory effects of the provisions that are being implemented by this interim final rule with comment period result in expenditures exceeding $100 million per year. Therefore, this interim final rule with comment period is an economically significant rule under Executive Order 12866, and a major rule under 5 U.S.C. 804(2).

In accordance with the provisions of Executive Order 12866, this interim final rule with comment period was reviewed by the Office of Management and Budget.

List of Subjects in 42 CFR Part 419

Health facilities, Hospitals, Medicare.

For the reasons set forth in the preamble, 42 CFR Part 419 is amended as set forth below:

PART 419—PROSPECTIVE PAYMENT SYSTEM FOR HOSPITAL OUTPATIENT DEPARTMENT SERVICES

1. The authority citation for Part 419 continues to read as follows:

Authority: Secs. 1102, 1833(t), and 187l of the Social Security Act (42 U.S.C. 1302, 1395l(t), and 1395hh).

2. Section 419.41 is amended by revising paragraph (c)(4)(i) to read as follows:

§ 419.41 Calculation of national beneficiary coinsurance amounts and national Medicare program payment amounts.

* * * * *

(c) * * *

(4) * * *

(i) The coinsurance amount for an APC cannot exceed the amount of the inpatient hospital deductible, established in accordance with § 409.82 of this chapter, for that year. For purposes of this paragraph (c)—

(A) Effective for drugs and biologicals furnished on or after January 1, 2001, the coinsurance amount for multiple APCs for a single drug or biological furnished on the same day will be aggregated and treated as the coinsurance amount for one APC.

(B) Effective for drugs and biologicals furnished on or after July 1, 2001, the coinsurance amount for the APC or APCs for a drug or biological furnished on the same day will be aggregated with the coinsurance amount for the APC that reflects the administration of the drug or biological furnished on that day and treated as the coinsurance amount for one APC.

* * * * *

3. Section 419.70 is amended by revising paragraph (f)(2)(ii) to read as follows:

§ 419.70 Transitional adjustment to limit decline in payment.

* * * * *

(f) * * *

(2) * * *

(ii) The reasonable cost of these services for this period.

* * * * *

(Catalog of Federal Domestic Assistance Program No. 93.774, Medicare'Supplementary Medical Insurance Program)

Dated: November 1, 2000.

Michael M. Hash,

Acting Administrator, Health Care Financing Administration.

Approved: November 1, 2000.

Donna E. Shalala,

Secretary.

Note to the Addenda: The following Addenda A through H will not appear in the Code of Federal Regulations.

Addenda A through H provide various data pertaining to the Medicare hospital outpatient prospective payment system. Addendum A contains the APCs with title, status indicators, relative weight, payment rate, national unadjusted coinsurance, and minimum unadjusted coinsurance. Addendum B differs from Addendum A in that the APC titles are not listed and both HCPCS codes and descriptions appear. Addendum C, entitled ''Hospital Outpatient Department (HOPD) Payment for Procedures by APC, Calendar Year 2001,'' is not published in this interim final rule with comment period, but will be posted on our website at (http://www.hcfa.gov /medlearn/ refopps.htm). Addendum C will display data similar to those contained in Addenda A and B, but sorted by APCs with each procedure code listed that is assigned to the APC. Addendum D lists the status indicators for how various services are treated under the hospital outpatient prospective payment system. Addendum E lists the procedures that we pay for only in an inpatient setting. Addendum F lists the wage index for urban areas, Addendum G lists the wage index for rural areas, and Addendum H lists the wage index for hospitals that are reclassified.

Addendum A.—List of Hospital Outpatient Ambulatory Payment Classification Groups with Status Indicators, Relative Weights, Payment Rates, and Coinsurance Amounts

The payment rate (once wage adjusted) is the total payment to the hospital. The coinsurance amount is part of the total payment rate.

Those APCs with status indicators ''G'' or ''J'' denote the inclusion of drugs that are eligible for pass-through payments. The relative weight column for these drug APCs is empty since payment for pass-through drugs/biologicals is calculated using the average wholesale price for the drug/ biological rather than the relative weight. Note also that the only coinsurance column that has been filled is the minimum unadjusted coinsurance column. The coinsurance is applied to the nonpass-through portion of the payment rate for the drug/biological.

Those APCs with status indicator ''H'' denote the inclusion of devices that are eligible for pass-through payments. The relative weight, payment rate, and coinsurance columns are not filled for these APCs. The relative weight and payment rate columns are empty because payment for pass-through devices is determined based on the hospital's submitted charges adjusted to cost using the hospital's cost-to-charge ratio. This calculation is done in the PRICER. The coinsurance columns for these APCs are not filled since the coinsurance is applied to the APC that contains the procedure with which the pass-through device is used rather than to the device APC.

Addendum B.—Hospital Outpatient Department (HOPD) Payment Status by HCPCS Code and Related Information

The codes listed in this addendum include the 2001 CPT codes as published in CPT 2001 by the American Medical Association. Also listed are the codes that have been deleted for 2001. These codes are denoted in the CPT column with the subscript letter ''D''. These codes are billable through March 31, 2001 for services occurring before January 1, 2001. Deleted codes billed after March 31,

2001 will be rejected. CPT codes appearing for the first time in 2001 are denoted in the CPT column with bolded print. These codes are new for 2001 and are billable effective January 1, 2001.

All CPT codes that are paid only as inpatient procedures are denoted by the status indicator ''C''. A number of procedures that appeared on the inpatient list in the April 7, 2000 final rule with comment period are now payable under the hospital outpatient prospective payment system. The status indicators for these codes have been updated to reflect their current payment status.

ADDENDUM A.—LIST OF HOSPITAL OUTPATIENT AMBULATORY PAYMENT CLASSIFICATIONS WITH STATUS INDICATORS, RELATIVE WEIGHTS, PAYMENT RATES, AND COINSURANCE AMOUNTS, CALENDAR YEAR 2001

APC	Group title	Status indicator	Relative weight	Payment rate	National unadjusted coinsurance	Minimum unadjusted coinsurance
0001	Photochemotherapy	S	0.47	$23.31	$8.49	$4.66
0002	Fine needle Biopsy/Aspiration	T	0.62	$30.75	$17.66	$6.15
0003	Bone Marrow Biopsy/Aspiration	T	0.98	$48.61	$27.99	$9.72
0004	Level I Needle Biopsy/ Aspiration Except Bone Marrow	T	1.84	$91.26	$32.57	$18.25
0005	Level II Needle Biopsy /Aspiration Except Bone Marrow	T	5.41	$268.32	$119.75	$53.66
0006	Level I Incision & Drainage	T	2.00	$99.19	$33.95	$19.84
0007	Level II Incision & Drainage	T	3.68	$182.51	$72.03	$36.50
0008	Level III Incision & Drainage	T	6.15	$305.02	$113.67	$61.00
0009	Nail Procedures	T	0.74	$36.70	$9.63	$7.34
0010	Level I Destruction of Lesion	T	0.55	$27.28	$9.86	$5.46
0011	Level II Destruction of Lesion	T	2.72	$134.90	$50.01	$26.98
0012	Level I Debridement & Destruction	T	0.53	$26.29	$9.18	$5.26
0013	Level II Debridement & Destruction	T	0.91	$45.13	$17.66	$9.03
0014	Level III Debridement & Destruction	T	1.50	$74.39	$24.55	$14.88
0015	Level IV Debridement & Destruction	T	1.77	$87.78	$31.20	$17.56
0016	Level V Debridement & Destruction	T	3.53	$175.07	$74.67	$35.01
0017	Level VI Debridement & Destruction	T	12.45	$617.47	$289.16	$123.49
0018	Biopsy Skin, Subcutaneous Tissue or Mucous Membrane	T	0.94	$46.62	$17.66	$9.32
0019	Level I Excision/ Biopsy	T	4.00	$198.39	$78.91	$39.68
0020	Level II Excision/ Biopsy	T	6.51	$322.87	$130.53	$64.57
0021	Level III Excision/ Biopsy	T	10.49	$520.26	$236.51	$104.05
0022	Level IV Excision/ Biopsy	T	12.49	$619.45	$292.94	$123.89
0023	Exploration Penetrating Wound	T	1.98	$98.20	$40.37	$19.64
0024	Level I Skin Repair	T	2.43	$120.51	$44.50	$24.10
0025	Level II Skin Repair	T	3.74	$185.49	$70.66	$37.10
0026	Level III Skin Repair	T	12.11	$600.61	$277.92	$120.12
0027	Level IV Skin Repair	T	15.80	$783.62	$383.10	$156.72
0028	Level I Incision/Excision Breast	T	12.37	$613.52	$303.74	$122.70
0029	Level II Incision/Excision Breast	T	31.39	$1,557.05	$820.79	$311.41
0030	Breast Reconstruction	T	31.11	$1,543.16	$763.55	$308.63
0032	Placement Transvenous Catheters/Arterial Cutdown	T	5.40	$267.82	$119.52	$53.56
0033	Partial Hospitalization	P	4.17	$206.82	$48.17	$41.36
0040	Arthrocentesis & Ligament/Tendon Injection	T	2.11	$104.65	$40.60	$20.93
0041	Arthroscopy	T	24.57	$1,218.58	$592.08	$243.72
0042	Arthroscopically-Aided Procedures	T	29.22	$1,449.19	$804.74	$289.84
0043	Closed Treatment Fracture Finger/Toe/Trunk	T	1.64	$81.34	$25.46	$16.27
0044	Closed Treatment Fracture/Dislocation Except Finger/Toe/Trunk	T	2.17	$107.63	$38.08	$21.53
0045	Bone/Joint Manipulation Under Anesthesia	T	11.02	$546.55	$277.12	$109.31
0046	Open/Percutaneous Treatment Fracture or Dislocation	T	22.29	$1,105.50	$535.76	$221.10
0047	Arthroplasty without Prosthesis	T	22.09	$1,095.58	$537.03	$219.12
0048	Arthroplasty with Prosthesis	T	29.06	$1,441.26	$725.94	$288.25
0049	Level I Musculoskeletal Procedures Except Hand and Foot	T	15.04	$745.93	$356.95	$149.19
0050	Level II Musculoskeletal Procedures Except Hand and Foot	T	21.13	$1,047.96	$513.86	$209.59
0051	Level III Musculoskeletal Procedures Except Hand and Foot	T	27.76	$1,376.79	$675.24	$275.36
0052	Level IV Musculoskeletal Procedures Except Hand and Foot	T	36.16	$1,793.39	$930.91	$358.68
0053	Level I Hand Musculoskeletal Procedures	T	11.32	$561.42	$253.49	$112.28
0054	Level II Hand Musculoskeletal Procedures	T	19.66	$975.06	$472.33	$195.01
0055	Level I Foot Musculoskeletal Procedures	T	15.47	$767.26	$355.34	$153.45
0056	Level II Foot Musculoskeletal Procedures	T	17.30	$858.02	$405.81	$171.60
0057	Bunion Procedures	T	21.00	$1,041.52	$496.65	$208.30
0058	Level I Strapping and Cast Application	S	1.09	$54.06	$19.27	$10.81
0059	Level II Strapping and Cast Application	S	1.74	$86.30	$29.59	$17.26
0060	Manipulation Therapy	S	0.77	$38.19	$7.80	$7.64
0070	Thoracentesis/Lavage Procedures	T	3.64	$180.53	$79.60	$36.11
0071	Level I Endoscopy Upper Airway	T	0.55	$27.28	$14.22	$5.46
0072	Level II Endoscopy Upper Airway	T	1.26	$62.49	$41.52	$12.50
0073	Level III Endoscopy Upper Airway	T	4.11	$203.84	$91.07	$40.77
0074	Level IV Endoscopy Upper Airway	T	13.61	$675.00	$347.54	$135.00
0075	Level V Endoscopy Upper Airway	T	18.55	$920.01	$467.29	$184.00
0076	Endoscopy Lower Airway	T	8.06	$399.75	$197.05	$79.95
0077	Level I Pulmonary Treatment	S	0.43	$21.33	$12.62	$4.27
0078	Level II Pulmonary Treatment	S	1.34	$66.46	$29.13	$13.29
0079	Ventilation Initiation and Management	S	3.18	$157.72	$107.70	$31.54
0080	Diagnostic Cardiac Catheterization	T	31.55	$1,564.75	$838.92	$312.95
0081	Non-Coronary Angioplasty or Atherectomy	T	28.81	$1,428.86	$710.91	$285.77
0082	Coronary Atherectomy	T	51.01	$2,529.89	$1,351.74	$505.98
0083	Coronary Angioplasty	T	29.70	$1,473.00	$794.30	$294.60
0084	Level I Electrophysiologic Evaluation	S	10.70	$530.68	$177.79	$106.14
0085	Level II Electrophysiologic Evaluation	S	27.06	$1,342.07	$654.48	$268.41
0086	Ablate Heart Dysrhythm Focus	S	47.62	$2,361.76	$1,265.37	$472.35
0087	Cardiac Electrophysiologic Recording/Mapping	S	9.53	$472.65	$214.72	$94.53
0088	Thrombectomy	T	26.49	$1,313.80	$678.68	$262.76

ADDENDUM A.—LIST OF HOSPITAL OUTPATIENT AMBULATORY PAYMENT CLASSIFICATIONS WITH STATUS INDICATORS, RELATIVE WEIGHTS, PAYMENT RATES, AND COINSURANCE AMOUNTS, CALENDAR YEAR 2001—Continued

APC	Group title	Status indicator	Relative weight	Payment rate	National unadjusted coinsurance	Minimum unadjusted coinsurance
0089	Insertion/Replacement of Permanent Pacemaker and Electrodes	T	78.45	$3,890.81	$2,275.19	$778.16
0090	Insertion/Replacement of Pacemaker Pulse Generator	T	78.28	$3,882.37	$2,133.88	$776.47
0091	Level I Vascular Ligation	T	14.79	$733.52	$348.23	$146.70
0092	Level II Vascular Ligation	T	20.21	$1,002.34	$505.37	$200.47
0093	Vascular Repair/Fistula Construction	T	12.82	$635.82	$277.34	$127.16
0094	Resuscitation and Cardioversion	S	4.51	$223.68	$105.29	$44.74
0095	Cardiac Rehabilitation	S	0.64	$31.74	$16.98	$6.35
0096	Non-Invasive Vascular Studies	S	2.06	$102.16	$61.48	$20.43
0097	Cardiac Monitoring for 30 days	X	1.62	$80.35	$62.40	$16.07
0098	Injection of Sclerosing Solution	T	1.19	$59.02	$20.88	$11.80
0099	Electrocardiograms	S	0.38	$18.85	$14.68	$3.77
0100	Stress Tests and Continuous ECG	X	1.70	$84.32	$71.57	$16.86
0101	Tilt Table Evaluation	S	4.47	$221.70	$128.84	$44.34
0102	Electronic Analysis of Pacemakers/other Devices	S	0.45	$22.32	$12.62	$4.46
0103	Miscellaneous Vascular Procedures	T	13.09	$649.21	$295.70	$129.84
0104	Transcatheter Placement of Intracoronary Stents	T	14.94	$740.96	$339.51	$148.19
0105	Revision/Removal of Pacemakers, AICD, or Vascular Device	T	15.06	$746.92	$372.32	$149.38
0106	Insertion/Replacement/Repair of Pacemaker Electrodes	T	18.96	$940.34	$503.07	$188.07
0107	Insertion of Cardioverter-Defibrillator	T	147.51	$7,315.91	$5,086.37	$1,463.18
0108	Insertion/Replacement/Repair of Cardioverter-Defibrillator Leads	T	210.84	$10,456.84	$5,484.72	$2,091.37
0109	Removal of Implanted Devices	T	6.53	$323.86	$133.51	$64.77
0110	Transfusion	S	5.83	$289.15	$122.73	$57.83
0111	Blood Product Exchange	S	14.17	$702.77	$300.74	$140.55
0112	Extracorporeal Photopheresis	S	39.60	$1,964.01	$663.65	$392.80
0113	Excision Lymphatic System	T	13.89	$688.89	$326.55	$137.78
0114	Thyroid/Lymphadenectomy Procedures	T	19.56	$970.10	$493.78	$194.02
0115	Cannula/Access Device Procedures	T	19.34	$959.19	$506.74	$191.84
0116	Chemotherapy Administration by Other Technique Except Infusion	S	2.34	$116.06	$23.21	$23.21
0117	Chemotherapy Administration by Infusion Only	S	1.84	$91.26	$71.80	$18.25
0118	Chemotherapy Administration by Both Infusion and Other Technique	S	2.90	$143.83	$72.03	$28.77
0119	Implantation of Devices	T	9.87	$489.59	$161.50	$97.92
0120	Infusion Therapy Except Chemotherapy	T	1.66	$82.33	$42.67	$16.47
0121	Level I Tube changes and Repositioning	T	2.36	$117.05	$52.53	$23.41
0122	Level II Tube changes and Repositioning	T	5.04	$249.96	$114.93	$49.99
0123	Bone Marrow Harvesting and Bone Marrow/Stem Cell Transplant	S	4.13	$204.83	$40.97	$40.97
0124	Revision of Implanted Infusion Pump	T	2.55	$126.64	$81.36	$25.33
0130	Level I Laparoscopy	T	25.36	$1,257.75	$659.53	$251.55
0131	Level II Laparoscopy	T	41.81	$2,073.61	$1,089.88	$414.72
0132	Level III Laparoscopy	T	48.91	$2,425.74	$1,239.22	$485.15
0140	Esophageal Dilation without Endoscopy	T	4.74	$235.09	$107.24	$47.02
0141	Upper GI Procedures	T	7.15	$354.61	$184.67	$70.92
0142	Small Intestine Endoscopy	T	7.45	$369.49	$162.42	$73.90
0143	Lower GI Endoscopy	T	7.98	$395.78	$199.12	$79.16
0144	Diagnostic Anoscopy	T	2.23	$110.60	$49.32	$22.12
0145	Therapeutic Anoscopy	T	7.46	$369.98	$179.39	$74.00
0146	Level I Sigmoidoscopy	T	2.83	$140.36	$65.15	$28.07
0147	Level II Sigmoidoscopy	T	6.26	$310.47	$149.11	$62.09
0148	Level I Anal/Rectal Procedure	T	2.34	$116.06	$43.59	$23.21
0149	Level II Anal/Rectal Procedure	T	12.86	$637.80	$293.06	$127.56
0150	Level III Anal/Rectal Procedure	T	17.68	$876.86	$437.12	$175.37
0151	Endoscopic Retrograde Cholangio-Pancreatography (ERCP)	T	10.53	$522.25	$245.46	$104.45
0152	Percutaneous Biliary Endoscopic Procedures	T	8.22	$407.68	$207.38	$81.54
0153	Peritoneal and Abdominal Procedures	T	19.62	$973.08	$496.31	$194.62
0154	Hernia/Hydrocele Procedures	T	22.43	$1,112.45	$556.98	$222.49
0157	Colorectal Cancer Screening: Barium Enema	S	1.79	$88.78	.....	$22.19
0158	Colorectal Cancer Screening: Colonoscopy	S	7.98	$395.78	.....	$98.94
0159	Colorectal Cancer Screening: Flexible Sigmoidoscopy	S	2.83	$140.36	.....	$35.09
0160	Level I Cystourethroscopy and other Genitourinary Procedures	T	5.43	$269.30	$110.11	$53.86
0161	Level II Cystourethroscopy and other Genitourinary Procedures	T	10.94	$542.58	$249.36	$108.52
0162	Level III Cystourethroscopy and other Genitourinary Procedures	T	17.49	$867.44	$427.49	$173.49
0163	Level IV Cystourethroscopy and other Genitourinary Procedures	T	28.98	$1,437.30	$792.58	$287.46
0164	Level I Urinary and Anal Procedures	T	2.17	$107.64	$33.03	$21.53
0165	Level II Urinary and Anal Procedures	T	3.89	$192.92	$91.76	$38.58
0166	Level I Urethral Procedures	T	10.17	$504.39	$218.73	$100.88
0167	Level II Urethral Procedures	T	21.06	$1,044.50	$555.84	$208.90
0168	Level III Urethral Procedures	T	24.94	$1,236.93	$536.11	$247.39
0169	Lithotripsy	T	46.72	$2,317.13	$1,384.20	$463.43
0170	Dialysis for Other Than ESRD Patients	S	6.68	$331.30	$72.26	$66.26
0180	Circumcision	T	13.62	$675.49	$304.87	$135.10
0181	Penile Procedures	T	32.37	$1,605.43	$906.36	$321.09
0182	Insertion of Penile Prosthesis	T	52.11	$2,584.45	$1,525.05	$516.89
0183	Testes/Epididymis Procedures	T	18.26	$905.62	$448.94	$181.12
0184	Prostate Biopsy	T	4.94	$245.01	$122.96	$49.00
0185	Removal or Repair of Penile Prosthesis	T	32.37	$1,605.43	$906.36	$321.09
0190	Surgical Hysteroscopy	T	17.85	$885.29	$443.89	$177.06
0191	Level I Female Reproductive Procedures	T	1.19	$59.02	$17.43	$11.80
0192	Level II Female Reproductive Procedures	T	2.38	$118.04	$35.33	$23.61
0193	Level III Female Reproductive Procedures	T	8.93	$442.89	$171.13	$88.58

ADDENDUM A.—LIST OF HOSPITAL OUTPATIENT AMBULATORY PAYMENT CLASSIFICATIONS WITH STATUS INDICATORS, RELATIVE WEIGHTS, PAYMENT RATES, AND COINSURANCE AMOUNTS, CALENDAR YEAR 2001—Continued

APC	Group title	Status indicator	Relative weight	Payment rate	National unadjusted coinsurance	Minimum unadjusted coinsurance
0194	Level IV Female Reproductive Procedures	T	16.21	$803.96	$395.94	$160.79
0195	Level V Female Reproductive Procedures	T	18.68	$926.46	$483.80	$185.29
0196	Dilatation & Curettage	T	14.47	$717.66	$357.98	$143.53
0197	Infertility Procedures	T	2.40	$119.03	$49.55	$23.81
0198	Pregnancy and Neonatal Care Procedures	T	1.34	$66.46	$33.03	$13.29
0199	Vaginal Delivery	T	11.20	$555.48	$157.83	$111.10
0200	Therapeutic Abortion	T	13.89	$688.89	$373.23	$137.78
0201	Spontaneous Abortion	T	13.00	$644.75	$329.65	$128.95
0210	Spinal Tap	T	3.00	$148.79	$62.40	$29.76
0211	Level I Nervous System Injections	T	3.32	$164.66	$74.78	$32.93
0212	Level II Nervous System Injections	T	3.64	$180.53	$88.78	$36.11
0213	Extended EEG Studies and Sleep Studies	S	11.15	$553.00	$290.42	$110.60
0214	Electroencephalogram	S	2.32	$115.06	$58.50	$23.01
0215	Level I Nerve and Muscle Tests	S	1.15	$57.04	$30.05	$11.41
0216	Level II Nerve and Muscle Tests	S	2.87	$142.34	$64.69	$28.47
0217	Level III Nerve and Muscle Tests	S	5.87	$291.13	$156.68	$58.23
0220	Level I Nerve Procedures	T	13.96	$692.36	$326.21	$138.47
0221	Level II Nerve Procedures	T	18.36	$910.58	$463.62	$182.12
0222	Implantation of Neurological Device	T	124.43	$6,171.23	$2,955.13	$1,234.25
0223	Implantation of Pain Management Device	T	7.05	$349.65	$154.27	$69.93
0224	Implantation of Reservoir/Pump/Shunt	T	17.89	$887.27	$453.41	$177.45
0225	Implantation of Neurostimulator Electrodes	T	17.72	$878.84	$408.33	$175.77
0226	Implantation of Drug Infusion Reservoir	T	5.62	$278.73	$109.42	$55.75
0227	Implantation of Drug Infusion Device	T	11.17	$553.99	$330.11	$110.80
0228	Creation of Lumbar Subarachnoid Shunt	T	25.06	$1,242.88	$696.46	$248.58
0229	Transcatherter Placement of Intravascular Shunts	T	34.81	$1,726.44	$1,030.12	$345.29
0230	Level I Eye Tests	S	0.98	$48.61	$22.48	$9.72
0231	Level II Eye Tests	S	2.64	$130.94	$59.87	$26.19
0232	Level I Anterior Segment Eye	T	6.04	$299.56	$134.66	$59.91
0233	Level II Anterior Segment Eye	T	13.79	$683.93	$331.60	$136.79
0234	Level III Anterior Segment Eye Procedures	T	20.64	$1,023.66	$502.16	$204.73
0235	Level I Posterior Segment Eye Procedures	T	2.94	$145.81	$78.91	$29.16
0236	Level II Posterior Segment Eye Procedures	T	6.70	$332.29	$147.96	$66.46
0237	Level III Posterior Segment Eye Procedures	T	33.96	$1,684.28	$852.68	$336.86
0238	Level I Repair and Plastic Eye Procedures	T	2.80	$138.87	$58.96	$27.77
0239	Level II Repair and Plastic Eye Procedures	T	6.26	$310.47	$123.42	$62.09
0240	Level III Repair and Plastic Eye Procedures	T	13.47	$668.06	$315.31	$133.61
0241	Level IV Repair and Plastic Eye Procedures	T	16.60	$823.30	$384.47	$164.66
0242	Level V Repair and Plastic Eye Procedures	T	23.70	$1,175.42	$597.36	$235.08
0243	Strabismus/Muscle Procedures	T	17.99	$892.23	$431.39	$178.45
0244	Corneal Transplant	T	32.88	$1,630.72	$851.42	$326.14
0245	Cataract Procedures without IOL Insert	T	26.55	$1,316.77	$623.85	$263.35
0246	Cataract Procedures with IOL Insert	T	26.55	$1,316.77	$623.85	$263.35
0247	Laser Eye Procedures Except Retinal	T	4.89	$242.52	$112.86	$48.50
0248	Laser Retinal Procedures	T	4.19	$207.81	$94.05	$41.56
0250	Nasal Cauterization/Packing	T	2.21	$109.61	$38.54	$21.92
0251	Level I ENT Procedures	T	1.68	$83.32	$27.99	$16.66
0252	Level II ENT Procedures	T	5.18	$256.90	$114.24	$51.38
0253	Level III ENT Procedures	T	12.02	$596.14	$284.00	$119.23
0254	Level IV ENT Procedures	T	12.45	$617.47	$272.41	$123.49
0256	Level V ENT Procedures	T	25.40	$1,259.74	$623.05	$251.95
0258	Tonsil and Adenoid Procedures	T	18.62	$923.48	$462.81	$184.70
0260	Level I Plain Film Except Teeth	X	0.79	$39.18	$22.02	$7.84
0261	Level II Plain Film Except Teeth Including Bone Density Measurement	X	1.38	$68.44	$38.77	$13.69
0262	Plain Film of Teeth	X	0.40	$19.83	$10.90	$3.97
0263	Level I Miscellaneous Radiology Procedures	X	1.68	$83.32	$45.88	$16.66
0264	Level II Miscellaneous Radiology Procedures	X	3.83	$189.96	$108.97	$37.99
0265	Level I Diagnostic Ultrasound Except Vascular	S	1.17	$58.03	$38.08	$11.61
0266	Level II Diagnostic Ultrasound Except Vascular	S	1.79	$88.78	$57.35	$17.76
0267	Vascular Ultrasound	S	2.72	$134.90	$80.06	$26.98
0268	Guidance Under Ultrasound	X	2.23	$110.60	$69.51	$22.12
0269	Echocardiogram Except Transesophageal	S	4.40	$218.22	$114.01	$43.64
0270	Transesophageal Echocardiogram	S	5.55	$275.25	$150.26	$55.05
0271	Mammography	S	0.70	$34.72	$19.50	$6.94
0272	Level I Fluoroscopy	X	1.40	$69.43	$39.00	$13.89
0273	Level II Fluoroscopy	X	2.49	$123.49	$61.02	$24.70
0274	Myelography	S	4.83	$239.55	$128.12	$47.91
0275	Arthrography	S	2.74	$135.89	$72.26	$27.18
0276	Level I Digestive Radiology	S	1.79	$88.78	$49.78	$17.76
0277	Level II Digestive Radiology	S	2.47	$122.50	$69.28	$24.50
0278	Diagnostic Urography	S	2.85	$141.35	$81.67	$28.27
0279	Level I Angiography and Venography except Extremity	S	6.30	$312.46	$174.57	$62.49
0280	Level II Angiography and Venography except Extremity	S	14.98	$742.95	$380.12	$148.59
0281	Venography of Extremity	S	4.40	$218.22	$115.16	$43.64
0282	Level I Computerized Axial Tomography	S	2.38	$118.04	$94.51	$23.61
0283	Level II Computerized Axial Tomography	S	4.89	$242.52	$179.39	$48.50
0284	Magnetic Resonance Imaging	S	8.02	$397.76	$257.39	$79.55
0285	Positron Emission Tomography (PET)	S	15.06	$746.92	$415.21	$149.38

ADDENDUM A.—LIST OF HOSPITAL OUTPATIENT AMBULATORY PAYMENT CLASSIFICATIONS WITH STATUS INDICATORS, RELATIVE WEIGHTS, PAYMENT RATES, AND COINSURANCE AMOUNTS, CALENDAR YEAR 2001—Continued

APC	Group title	Status indicator	Relative weight	Payment rate	National unadjusted coinsurance	Minimum unadjusted coinsurance
0286	Myocardial Scans	S	7.28	$361.06	$200.04	$72.21
0290	Standard Non-Imaging Nuclear Medicine	S	1.94	$96.21	$55.51	$19.24
0291	Level I Diagnostic Nuclear Medicine Excluding Myocardial Scans	S	3.15	$156.22	$93.14	$31.24
0292	Level II Diagnostic Nuclear Medicine Excluding Myocardial Scans	S	4.36	$216.24	$126.63	$43.25
0294	Level I Therapeutic Nuclear Medicine	S	5.13	$254.43	$144.06	$50.89
0295	Level II Therapeutic Nuclear Medicine	S	19.85	$984.48	$609.17	$196.90
0296	Level I Therapeutic Radiologic Procedures	S	3.57	$177.06	$100.25	$35.41
0297	Level II Therapeutic Radiologic Procedures	S	6.13	$304.03	$172.51	$60.81
0300	Level I Radiation Therapy	S	1.98	$98.20	$47.72	$19.64
0301	Level II Radiation Therapy	S	2.21	$109.61	$52.53	$21.92
0302	Level III Radiation Therapy	S	8.21	$407.18	$216.55	$81.44
0303	Treatment Device Construction	X	2.83	$140.36	$69.28	$28.07
0304	Level I Therapeutic Radiation Treatment Preparation	X	1.49	$73.90	$41.52	$14.78
0305	Level II Therapeutic Radiation Treatment Preparation	X	4.06	$201.36	$97.50	$40.27
0310	Level III Therapeutic Radiation Treatment Preparation	X	13.98	$693.35	$339.05	$138.67
0311	Radiation Physics Services	X	1.32	$65.46	$31.66	$13.09
0312	Radioelement Applications	S	4.09	$202.85	$109.65	$40.57
0313	Brachytherapy	S	7.89	$391.31	$164.02	$78.26
0314	Hyperthermic Therapies	S	5.88	$291.62	$150.95	$58.32
0320	Electroconvulsive Therapy	S	3.68	$182.51	$80.06	$36.50
0321	Biofeedback and Other Training	S	1.26	$62.49	$29.25	$12.50
0322	Brief Individual Psychotherapy	S	1.32	$65.46	$14.22	$13.09
0323	Extended Individual Psychotherapy	S	1.85	$91.75	$22.48	$18.35
0324	Family Psychotherapy	S	1.87	$92.74	$20.19	$18.55
0325	Group Psychotherapy	S	1.55	$76.88	$19.96	$15.38
0330	Dental Procedures	S	1.51	$74.89	$14.98	$14.98
0340	Minor Ancillary Procedures	X	1.04	$51.58	$12.85	$10.32
0341	Immunology Tests	X	0.13	$6.44	$3.67	$1.29
0342	Level I Pathology	X	0.26	$12.90	$8.03	$2.58
0343	Level II Pathology	X	0.45	$22.32	$12.16	$4.46
0344	Level III Pathology	X	0.79	$39.18	$23.63	$7.84
0345	Transfusion Laboratory Procedures Level I	X	0.22	$10.92	$5.37	$2.18
0346	Transfusion Laboratory Procedures Level II	X	0.51	$25.49	$12.03	$5.10
0347	Transfusion Laboratory Procedures Level III	X	0.84	$41.90	$20.13	$8.38
0348	Fertility Laboratory Procedures	X	0.52	$25.57	$5.11	$5.11
0349	Miscellaneous Laboratory Procedures	X	0.48	$23.65	$4.73	$4.73
0354	Administration of Influenza/Pneumonia Vaccine	K	0.13	$6.33		
0355	Level I Immunizations	K	0.19	$9.42	$5.05	$1.88
0356	Level II Immunizations	K	0.36	$17.86	$4.82	$3.57
0359	Injections	X	0.96	$47.61	$9.52	$9.52
0360	Level I Alimentary Tests	X	1.38	$68.44	$34.75	$13.69
0361	Level II Alimentary Tests	X	3.53	$175.07	$88.09	$35.01
0362	Fitting of Vision Aids	X	0.51	$25.30	$9.63	$5.06
0363	Otorhinolaryngologic Function Tests	X	2.83	$140.36	$53.22	$28.07
0364	Level I Audiometry	X	0.68	$33.72	$13.31	$6.74
0365	Level II Audiometry	X	1.47	$72.91	$22.48	$14.58
0367	Level I Pulmonary Test	X	0.83	$41.16	$20.65	$8.23
0368	Level II Pulmonary Tests	X	1.66	$82.33	$42.44	$16.47
0369	Level III Pulmonary Tests	X	2.34	$116.06	$58.50	$23.21
0370	Allergy Tests	X	0.57	$28.27	$11.81	$5.65
0371	Allergy Injections	X	0.32	$15.87	$3.67	$3.17
0372	Therapeutic Phlebotomy	X	0.43	$21.33	$10.09	$4.27
0373	Neuropsychological Testing	X	3.21	$159.20	$44.96	$31.84
0374	Monitoring Psychiatric Drugs	X	1.17	$58.03	$13.08	$11.61
0600	Low Level Clinic Visits	V	0.98	$48.61	$9.72	$9.72
0601	Mid Level Clinic Visits	V	1.00	$49.60	$9.92	$9.92
0602	High Level Clinic Visits	V	1.66	$82.33	$16.47	$16.47
0610	Low Level Emergency Visits	V	1.34	$66.46	$20.65	$13.29
0611	Mid Level Emergency Visits	V	2.11	$104.65	$36.47	$20.93
0612	High Level Emergency Visits	V	3.19	$158.21	$54.14	$31.64
0620	Critical Care	S	8.60	$426.53	$152.78	$85.31
0701	SR 89 chloride, per mCi	G		$783.75		$95.62
0702	SM 153 lexidronam, 50 mCi	G		$942.09		$134.87
0704	IN 111 Satumomab pendetide per dose	G		$712.50		$86.93
0705	TC 99M tetrofosmin, per dose	G		$136.80		$16.69
0725	Leucovorin calcium inj, 50 mg	G		$49.73		$6.66
0726	Dexrazoxane hcl injection, 250 mg	G		$161.11		$21.59
0727	Etidronate disodium inj 300 mg	G		$63.65		$8.53
0728	Filgrastim 300 mcg injection	G		$171.38		$22.96
0730	Pamidronate disodium, 30 mg	G		$232.51		$31.16
0731	Sargramostim injection 50 mcg	G		$27.42		$3.67
0732	Mesna injection 200 mg	G		$36.51		$4.89
0733	Non esrd epoetin alpha inj, 1000 u	G		$11.40		$1.53
0750	Dolasetron mesylate, 10 mg	G		$14.81		$1.98
0754	Metoclopramide hcl injection up to 10 mg	G		$2.00		$0.27
0755	Thiethylperazine maleate inj up to 10 mg	G		$5.02		$0.67
0761	Unspecified oral anti-emetic	G		$0.60		$0.08
0762	Dronabinol 2.5mg oral	G		$3.20		$0.48

ADDENDUM A.—LIST OF HOSPITAL OUTPATIENT AMBULATORY PAYMENT CLASSIFICATIONS WITH STATUS INDICATORS, RELATIVE WEIGHTS, PAYMENT RATES, AND COINSURANCE AMOUNTS, CALENDAR YEAR 2001—Continued

APC	Group title	Status indicator	Relative weight	Payment rate	National unadjusted coinsurance	Minimum unadjusted coinsurance
0763	Dolasetron mesylate oral, 100 mg	G		$65.21		$8.74
0764	Granisetron hcl injection 100 mcg	G		$1.85		$0.25
0765	Granisetron hcl 1 mg oral	G		$44.70		$5.99
0768	Ondansetron hcl injection 1 mg	G		$6.09		$0.82
0769	Ondansetron hcl 8mg oral	G		$25.15		$3.37
0800	Leuprolide acetate, 3.75 mg	G		$492.71		$63.27
0801	Cyclophosphamide oral 25 mg	G		$2.12		$0.28
0802	Etoposide oral 50 mg	G		$45.95		$6.16
0803	Melphalan oral 2 mg	G		$2.07		$0.28
0807	Aldesleukin/single use vial	G		$569.76		$76.35
0809	Bcg live intravesical vac	G		$159.39		$19.45
0810	Goserelin acetate implant 3.6 mg	G		$446.49		$59.83
0811	Carboplatin injection 50 mg	G		$98.90		$13.25
0812	Carmus bischl nitro inj 100 mg	G		$103.27		$13.84
0813	Cisplatin 10 mg injection	G		$42.18		$5.65
0814	Asparaginase injection 10,000 u	G		$57.41		$7.69
0815	Cyclophosphamide 100 mg inj	G		$6.13		$0.82
0816	Cyclophosphamide lyophilized 100 mg	G		$6.13		$0.82
0817	Cytarabine hcl 100 mg inj	G		$5.94		$0.80
0818	Dactinomycin 0.5 mg	G		$12.73		$1.71
0819	Dacarbazine 10 mg inj	G		$1.13		$0.15
0820	Daunorubicin 10 mg	G		$80.04		$10.73
0821	Daunorubicin citrate liposom 10 mg	G		$64.60		$8.66
0822	Diethylstilbestrol injection 250 mg	G		$4.20		$0.56
0823	Docetaxel, 20 mg	G		$283.65		$38.01
0824	Etoposide 10 mg inj	G		$4.06		$0.54
0826	Methotrexate Oral 2.5 mg	G		$2.92		$0.39
0827	Floxuridine injection 500 mg	G		$129.56		$17.36
0828	Gemcitabine HCL 200 mg	G		$88.46		$11.85
0830	Irinotecan injection 20 mg	G		$117.81		$15.79
0831	Ifosfomide injection 1 gm	G		$141.50		$18.96
0832	Idarubicin hcl injection 5 mg	G		$341.38		$45.75
0833	Interferon alfacon-1, 1 mcg	G		$3.91		$0.52
0834	Interferon alfa-2a inj recombinant 3 million u	G		$33.22		$4.45
0836	Interferon alfa-2b inj recombinant, 1 million	G		$11.28		$1.51
0838	Interferon gamma 1-b inj, 3 million u	G		$199.50		$26.73
0839	Mechlorethamine hcl inj 10 mg	G		$11.01		$1.48
0840	Melphalan hydrochl 50 mg	G		$363.48		$48.71
0841	Methotrexate sodium inj 5 mg	G		$0.45		$0.06
0842	Fludarabine phosphate inj 50 mg	G		$237.03		$31.76
0843	Pegaspargase, singl dose vial	G		$1,321.65		$177.10
0844	Pentostatin injection, 10 mg	G		$1,562.75		$209.41
0847	Doxorubicin hcl 10 mg vl chemo	G		$15.79		$2.12
0849	Rituximab, 100 mg	G		$420.29		$56.32
0850	Streptozocin injection, 1 gm	G		$65.79		$8.82
0851	Thiotepa injection, 15 mg	G		$100.30		$13.44
0852	Topotecan, 4 mg	G		$573.75		$76.88
0853	Vinblastine sulfate inj, 1 mg	G		$4.11		$0.55
0854	Vincristine sulfate 1 mg inj	G		$30.16		$4.04
0855	Vinorelbine tartrate, 10 mg	G		$75.51		$10.12
0856	Porfimer sodium, 75 mg	G		$2,603.67		$348.89
0857	Bleomycin sulfate injection 15 u	G		$294.48		$39.46
0858	Cladribine, 1mg	G		$53.47		$7.16
0859	Fluorouracil injection 500 mg	G		$2.75		$0.37
0860	Plicamycin (mithramycin) inj 2.5 mg	G		$93.80		$12.57
0861	Leuprolide acetate injection 1 mg	G		$22.90		$3.07
0862	Mitomycin 5 mg inj	G		$121.65		$16.30
0863	Paclitaxel injection, 30 mg	G		$173.50		$23.25
0864	Mitoxantrone hcl, 5 mg	G		$223.02		$29.88
0865	Interferon alfa-n3 inj, human leukocyte derived, 250,000 iu	G		$7.86		$1.05
0884	Rho d immune globulin inj, 1 dose pkg	G		$35.91		$4.38
0886	Azathioprine oral 50mg	G		$1.24		$0.17
0887	Azathioprine parenteral 100 mg	G		$67.88		$9.10
0888	Cyclosporine oral 100 mg	G		$5.80		$0.78
0889	Cyclosporin parenteral 250mg	G		$15.81		$2.12
0890	Lymphocyte immune globulin 250 mg	G		$249.13		$30.39
0891	Tacrolimus oral per 1 mg	G		$2.66		$0.36
0900	Alglucerase injection, per 10 u	G		$37.53		$5.03
0901	Alpha 1 proteinase inhibitor, 10 mg	G		$2.09		$0.28
0902	Botulinum toxin a, per unit	G		$4.39		$0.59
0903	Cytomegalovirus imm IV, vial	G		$370.50		$49.65
0905	Immune globulin 500 mg	G		$27.28		$3.33
0906	RSV-ivig, 50 mg	G		$427.73		$57.32
0907	Ganciclovir Sodium 500 mg injection	K	0.45	$22.26		$4.45
0908	Tetanus immune globulin inj up to 250 u	G		$102.60		$13.75
0909	Interferon beta-1a, 33 mcg	G		$204.73		$27.43
0910	Interferon beta-1b, .25 mg	G		$57.00		$7.64
0911	Streptokinase per 250,000 iu	K	1.76	$87.25		$17.45

ADDENDUM A.—LIST OF HOSPITAL OUTPATIENT AMBULATORY PAYMENT CLASSIFICATIONS WITH STATUS INDICATORS, RELATIVE WEIGHTS, PAYMENT RATES, AND COINSURANCE AMOUNTS, CALENDAR YEAR 2001—Continued

APC	Group title	Status indicator	Relative weight	Payment rate	National unadjusted coinsurance	Minimum unadjusted coinsurance
0913	Ganciclovir long act implant 4.5 mg	G		$4,750.00		$636.50
0914	Reteplase, per 37.6mg	G		$2,612.50		$350.08
0915	Alteplase inj rec, per 10 mg	K	3.80	$188.46		$37.69
0916	Imiglucerase, unit	G		$3.75		$0.50
0917	Pharmacologic stressors	K	0.36	$17.86		$3.57
0918	Brachytherapy Seeds, Any type, Each	H				
0925	Factor viii per iu	G		$0.88		$0.12
0926	Factor VIII (porcine) per iu	G		$2.09		$0.28
0927	Factor viii recombinant per iu	G		$1.17		$0.16
0928	Factor ix complex per iu	G		$.71		$0.10
0929	Anti-inhibitor per iu	G		$1.43		$0.19
0930	Antithrombin iii injection per iu	G		$.82		$0.11
0931	Factor IX non-recombinant, per iu	G		$0.72		$0.10
0932	Factor IX recombinant, per iu	G		$1.12		$0.10
0949	Plasma, Pooled Multiple Donor, Solvent/Detergent Treated, Frozen	K	2.94	$145.76		$29.15
0950	Blood (Whole) For Transfusion	K	2.08	$103.33		$20.67
0952	Cryoprecipitate	K	0.70	$34.70		$6.94
0953	Fibrinogen Unit	K	0.48	$23.80		$4.76
0954	RBC Leukocytes Reduced	K	2.83	$140.35		$28.07
0955	Plasma, Fresh Frozen	K	2.26	$111.85		$22.37
0956	Plasma Protein Fraction	K	1.26	$62.49		$12.50
0957	Platelet Concentrate	K	0.98	$48.55		$9.71
0958	Platelet Rich Plasma	K	1.16	$57.54		$11.51
0959	Red Blood Cells	K	2.04	$101.31		$20.26
0960	Washed Red Blood Cells	K	3.81	$188.75		$37.75
0961	Infusion, Albumin (Human) 5%, 500 ml	K	2.77	$137.38		$27.48
0962	Infusion, Albumin (Human) 25%, 50 ml	K	1.38	$68.44		$13.69
0970	New Technology— I ($0–$50)	T	0.52	$25.79		$5.16
0971	New Technology— II ($50–$100)	S	1.55	$76.88		$15.38
0972	New Technology— III ($100–$200)	T	3.09	$153.26		$30.65
0973	New Technology— IV ($200–$300)	T	5.16	$255.91		$51.18
0974	New Technology— V ($300–$500)	S	8.25	$409.17		$81.83
0975	New Technology— VI ($500–$750)	T	12.90	$639.79		$127.96
0976	New Technology— VII ($750–$1000)	S	18.05	$895.21		$179.04
0977	New Technology— VIII ($1000–$1250)	T	23.20	$1,150.63		$230.13
0978	New Technology— IX ($1250–$1500)	T	28.36	$1,406.54		$281.31
0979	New Technology— X ($1500–$1750)	T	33.51	$1,661.96		$332.39
0980	New Technology— XI ($1750–$2000)	T	38.67	$1,917.89		$383.58
0981	New Technology— XII ($2000–$2500)	S	46.40	$2,301.26		$460.25
0982	New Technology— XIII ($2500–$3500)	T	61.87	$3,068.50		$613.70
0983	New Technology— XIV ($3500–$5000)	T	87.65	$4,347.09		$869.42
0984	New Technology— XV ($5000–$6000)	T	113.43	$5,625.67		$1,125.13
0987	New Device Technology— I ($0-$250)	X		$127.86		$25.57
0988	New Device Technology— II ($250-$500)	X		$383.58		$76.72
0989	New Device Technology— III ($500-$750)	X		$639.30		$127.86
0990	New Device Technology— IV ($750-$1000)	X		$895.01		$179.00
0991	New Device Technology— V ($1000-$1500)	X		$1,278.59		$255.72
0992	New Device Technology— VI ($1500-$2000)	X		$1,790.03		$358.01
0993	New Device Technology— VII ($2000-$3000)	X		$2,557.18		$511.44
0994	New Device Technology— VIII ($3000-$4000)	X		$3,580.05		$716.01
0995	New Device Technology— IX ($4000-$5000)	X		$4,602.92		$920.58
0996	New Device Technology— X ($5000-$7000)	X		$6,137.23		$1,227.45
0997	New Device Technology— XI ($7000-$9000)	X		$8,182.98		$1,636.60
1000	Perclose Closer Prostar Arterial Vascular Closure	H				
1001	AcuNav-diagnstic ultrsnd ca	H				
1002	Cochlear Implant System	H				
1003	Cath, ablation, Livewire TC	H				
1004	Fast-Cath,Swartz,SAFL,CSTA	H				
1006	ARRAY post chamb IOL	H				
1007	Ams 700 penile prosthesis	H				
1008	Urolume-implt urethral stent	H				
1009	Plasma, cryoprecipitate-reduced, unit	K	0.86	$42.76		$8.55
1010	Blood, L/R, CMV-neg	K	2.88	$142.84		$28.57
1011	Platelets, L/R, CMV-neg, unit	K	11.86	$588.15		$117.63
1012	Platelet concentrate, L/R, irradiated, unit	K	1.92	$95.23		$19.05
1013	Platelet concentrate, L/R, unit	K	1.18	$58.30		$11.66
1014	Platelets, aph/pher, L/R, unit	K	8.93	$443.11		$88.62
1016	Blood, L/R, froz/deglycerol/washed	K	7.15	$354.68		$70.94
1017	Platelets, aph/pher, L/R, CMV-neg, unit	K	9.33	$462.54		$92.51
1018	Blood, L/R, irradiated	K	3.13	$155.48		$31.10
1019	Platelets, aph/pher, L/R, irradiated, unit	K	9.64	$478.09		$95.62
1024	Quinupristin 150 mg/dalfopriston 350 mg	J		$102.05		$13.67
1025	Marinr CS catheter	H				
1026	RF Perfrmr cath 5F RF Marinr	H				
1027	Magic x/short, Radius14mm	H				
1028	Prcis Twst trnsvg anch sys	H				
1029	CRE guided balloon dil cath	H				
1030	Cthtr:Mrshal,Blu Max Utr Dmnd	H				

ADDENDUM A.—LIST OF HOSPITAL OUTPATIENT AMBULATORY PAYMENT CLASSIFICATIONS WITH STATUS INDICATORS, RELATIVE WEIGHTS, PAYMENT RATES, AND COINSURANCE AMOUNTS, CALENDAR YEAR 2001—Continued

APC	Group title	Status indicator	Relative weight	Payment rate	National unadjusted coinsurance	Minimum unadjusted coinsurance
1033	Sonicath mdl 37-410	H				
1034	SURPASS, Long30 SURPASS-cath	H				
1035	Cath, Ultra ICE	H				
1036	R port/reservoir impl dev	H				
1037	Vaxcelchronic dialysis cath	H				
1038	UltraCross Imaging Cath	H				
1039	Wallstent/RP: Trach	H				
1040	Wallstent/RP TIPS—20/40/60	H				
1042	Wallstent, UltraFlex: Bil	H				
1043	Atherectomy sys, coronary	H				
1045	I-131 MIBG (ioben-sulfate) O.5mCi	G		$1,140.00		$139.08
1047	Navi-Star, Noga-Star cath	H				
1048	NeuroCyberneticPros: gen	H				
1051	Oasis Thrombectomy Cath	H				
1053	EnSite 3000 catheter	H				
1054	Hydrolyser Thromb Cath 6/7F	H				
1055	Transesoph 210, 210-S Cath	H				
1056	Thermachoice II Cath	H				
1057	Micromark Tissue Marker	H				
1059	Carticel,auto cult-chndr cyte	G		$14,250.00		$2,010.00
1060	ACS multi-link tristor stent	H				
1061	ACS Viking Guiding cath	H				
1063	EndoTak Endurance EZ, RX leads	H				
1067	Megalink biliary stent	H				
1068	Pulsar DDD pmkr	H				
1069	Discovery DR, pmaker	H				
1071	Pulsar Max, Pulsar SR pmkr	H				
1072	Guidant: blln dil cath	H				
1073	Gynecare Morcellator	H				
1074	RX/OTW Viatrac-peri dil cath	H				
1075	Guidant: lead	H				
1076	Ventak mini sc defib	H				
1077	Ventak VR Prizm VR, sc defib	H				
1078	Ventak: Prizm, AVIIIDR defib	H				
1079	CO 57/58 0.5 mCi	G		$264.10		$32.22
1084	Denileukin diftitox, 300 mcg	G		$942.88		$126.35
1086	Temozolomide, 5 mg	G		$5.70		$0.76
1087	I-123 per uCi capsule	G		$0.84		$0.10
1089	CO 57, 0.5 mCi	G		$91.20		$11.13
1090	IN 111 Chloride, per mCi	G		$152.00		$18.54
1091	IN 111 Oxyquinoline, per 5 mCi	G		$508.25		$62.01
1092	IN 111 Pentetate, per 1.5 mCi	G		$769.50		$93.88
1094	TC 99M Albumin aggr, per vial	J		$34.20		$4.17
1095	TC 99M Depreotide, per vial	G		$760.00		$101.84
1096	TC 99M Exametazime, per dose	G		$445.31		$63.75
1097	TC 99M Mebrofenin, per vial	G		$46.76		$5.71
1098	TC 99M Pentetate, per vial	G		$22.80		$2.78
1099	TC 99M Pyrophosphate, per vial	J		$42.75		$5.22
1100	Medtronic AVE GT1 guidewire	H				
1101	Medtronic AVE, AVE Z2 cath	H				
1102	Synergy Neurostim Genrtr	H				
1103	Micro Jewel Defibrillator	H				
1104	RF Conductor Ablative Cath	H				
1105	Sigma 300VDD pacmker	H				
1106	SynergyEZ Pt Progrmr	H				
1107	Torqr, Solist cath	H				
1108	Reveal Cardiac Recorder	H				
1109	Implantable anchor: Ethicon	H				
1110	Stable Mapper, cath electrd	H				
1111	AneuRxAort-Uni-Ilicstnt&cath	H				
1112	AneuRx Stent graft/del.cath	H				
1113	Tlnt Endo Sprng Stnt Grft Sys	H				
1114	TalntSprgStnt+Graf endo pros	H				
1115	5038S,5038,5038L pace lead	H				
1116	CapSureSP pacing Lead	H				
1117	Ancure Endograft Del Sys	H				
1118	Sigma300DR LegIIDR,pacemkr	H				
1119	Sprint6932,6943 defib lead	H				
1120	Sprint6942,6945 defib lead	H				
1121	Gem defibrillator	H				
1122	TC 99M arcitumomab per dose	G		$926.25		$124.12
1123	Gem II VR defibrillator	H				
1124	InterStim Test Stim Kit	H				
1125	Kappa 400SR,Ttopaz II SR pmkr	H				
1126	Kappa 700 DR pacemakr	H				
1127	Kappa 700SR,pmkr sgl chamber	H				
1128	Kappa 700D,Ruby IID pmkr	H				
1129	Kappa 700VDD,pacmkr	H				

ADDENDUM A.—LIST OF HOSPITAL OUTPATIENT AMBULATORY PAYMENT CLASSIFICATIONS WITH STATUS INDICATORS, RELATIVE WEIGHTS, PAYMENT RATES, AND COINSURANCE AMOUNTS, CALENDAR YEAR 2001—Continued

APC	Group title	Status indicator	Relative weight	Payment rate	National unadjusted coinsurance	Minimum unadjusted coinsurance
1130	Sigma 200D,LGCY IID sc pmkr	H				
1131	Sigma 200DR, pmker	H				
1132	Sigma 200SR Leg II:sc pac	H				
1133	Sigma SR, Vita SR, pmaker	H				
1134	Sigma 300D pmker	H				
1135	Entity DR 5326L/R, DC, pmkr	H				
1136	Affinity DR 5330L/R, DC, pmkr	H				
1137	CardioSEAL implant syst	H				
1143	AddVent mod 2060BL,VDD	H				
1144	Afnty SP 5130,Integrity SR,pmkr	H				
1145	Angio-Seal 6fr, 8fr	H				
1147	AV Plus DX 1368: lead	H				
1148	Contour MD sc defib	H				
1149	Entity DC 5226R-pmker	H				
1151	Passiveplus DX lead, 10mdls	H				
1152	LifeSite Access System	H				
1153	Regency SC+ 2402L pmker	H				
1154	SPL:SPOI,02,04 − defib lead	H				
1155	Repliform 8 sq cm	H				
1156	Tr 1102TrSR+ 2260L,2264L,5131	H				
1157	Trilogy DCT 23/8L pmkr	H				
1158	TVL lead SV01,SV02,SV04	H				
1159	TVL RV02,RV06,RV07: lead	H				
1160	TVL–ADX 1559: lead	H				
1161	Tendril DX, 1388 pacing lead	H				
1162	TempoDr, TrilogyDR+DC pmkr	H				
1163	Tendril SDX, 1488T pacing lead	H				
1164	Iodine-125 brachytx seed	H				
1166	Cytarabine liposomal, 10 mg	G		$371.45		$49.77
1167	Epirubicin hcl, 2 mg	J		$24.94		$3.34
1171	Autosuture site marker stple	H				
1172	Spacemaker dissect ballon	H				
1173	Cor stntS540,S670,o-wire stn	H				
1174	Bard brachytx needle	H				
1178	Busulfan IV, 6 mg	G		$26.48		$3.55
1180	Vigor SR, SC, pmkr	H				
1181	Meridian SSI, SC, pmkr	H				
1182	Pulsar SSI, SC, pmkr	H				
1183	Jade IIS, Sigma 300S,SC, pmkr	H				
1184	Sigma 200S, SC, pmkr	H				
1188	I 131, per mCi	G		$5.86		$0.75
1200	TC 99M Sodium Glucoheptonate, per vial	G		$113.05		$13.79
1201	TC 99M succimer, per vial	G		$135.66		$16.55
1202	TC 99M Sulfur Colloid, per dose	G		$38.00		$4.64
1203	Verteporfin for Injection	G		$1,458.25		$195.41
1205	TC 99M Disofenin, per vial	G		$427.50		$57.29
1207	Octreotide acetate depot 1mg	G		$135.10		$16.48
1302	SQ01: lead	H				
1303	CapSure Fix 6940/4068-110, lead	H				
1304	Sonicath mdl 37–416,–418	H				
1305	Apligraf	G		$1,157.81		$163.31
1306	NeuroCyberneticPros: lead	H				
1311	Trilogy DR+/DAO pmkr	H				
1312	Magic WALLSTENT stent-Mini	H				
1313	Magic medium, Radius 31mm	H				
1314	Magic WALLSTENT stent-Long	H				
1315	Vigor DR, Meridian DR pmkr	H				
1316	Meridian DDD pmkr	H				
1317	Discovery SR, pmkr	H				
1318	Meridian SR pmakr	H				
1319	Wallstent/RP Enteral--60mm	H				
1320	Wallstent/RP Iliac Del Sys	H				
1325	Pallidium − 103 seed	H				
1326	Angio-jet rheolytic thromb cath	H				
1328	ANS Renew NS trnsmtr	H				
1333	PALMZA Corinthian bill stent	H				
1334	Crown,Mini-crown,CrossLC	H				
1335	Mesh, Prolene	H				
1336	Constant Flow Imp Pump	H				
1337	IsoMed 8472-20/35/60	H				
1348	I 131 per mCi solution	G		$146.57		$17.88
1350	Prosta/OncoSeed, RAPID strand, I-125	H				
1351	CapSure(Fix)pacing lead	H				
1352	Gem II defib	H				
1353	Itrel Interstm neurostim+ext	H				
1354	Kappa 400DR,Diamond II 820DR	H				
1355	Kappa 600DR, Vita DR	H				
1356	Profile MD V–186HV3 sc defib	H				

ADDENDUM A.—LIST OF HOSPITAL OUTPATIENT AMBULATORY PAYMENT CLASSIFICATIONS WITH STATUS INDICATORS, RELATIVE WEIGHTS, PAYMENT RATES, AND COINSURANCE AMOUNTS, CALENDAR YEAR 2001—Continued

APC	Group title	Status indicator	Relative weight	Payment rate	National unadjusted coinsurance	Minimum unadjusted coinsurance
1357	Angstrom MD V–190HV3 sc defib	H				
1358	Affinity DC 5230R-Pacemaker	H				
1359	Pulsar,Pulsar Max DR,pmkr	H				
1363	Gem DR, DC, defib	H				
1364	Photon DR V-230HV3 DC defib	H				
1365	Guidewire, Hi-Torque14/18/35	H				
1366	Guidewire,PTCA, Hi-Torque	H				
1367	Guidewire, Hi-Torque CrossIt	H				
1369	ANS Renew Stim Sys recvr	H				
1370	Tension-Free Vaginal Tape	H				
1371	Symp Nitinol Transhep Bil Sys	H				
1372	Cordis Nitinol bil stent	H				
1375	Stent, coronary, NIR	H				
1376	ANS Renew Stim Sys lead	H				
1377	Specify 3988 neuro lead	H				
1378	InterStim Tx 3080/3886 lead	H				
1379	Pisces-Quad 3887 lead	H				
1400	Diphenhydramine hcl 50mg	G		$1.18		$.16
1401	Prochlorperazine maleate 5mg	G		$1.31		$.18
1402	Promethazine hcl 12.5mg oral	G		$.03		$.00
1403	Chlorpromazine hcl 10mg oral	G		$.55		$.07
1404	Trimethobenzamide hcl 250mg	G		$.36		$.05
1405	Thiethylperazine maleate10mg	G		$.69		$.09
1406	Perphenazine 4mg oral	G		$.71		$.10
1407	Hydroxyzine pamoate 25mg	G		$.20		$.03
1409	Factor viia recombinant, per 1.2 mg	G		$1,596.00		$213.86
1410	Prosorba column	H				
1411	Herculink,OTW SDS bil stent	H				
1420	StapleTac2 Bone w/Dermis	H				
1421	StapleTac2 Bone wo Dermis	H				
1450	Orthosphere Arthroplasty	H				
1451	Orthosphere Arthroplasty Kit	H				
1500	Atherectomy sys, peripheral	H				
1600	TC 99M sestamibi, per syringe	G		$109.25		$13.33
1601	TC 99M medronate, per dose	G		$38.38		$4.68
1602	TC 99M apcitide, per vial	G		$47.50		$5.80
1603	TL 201, mCi	G		$28.50		$3.48
1604	IN 111 capromab pendetide, per dose	G		$1,008.90		$135.19
1605	Abciximab injection, 10 mg	G		$513.02		$68.74
1606	Anistreplase, 30 u	G		$2,693.80		$360.97
1607	Eptifibatide injection, 5 mg	G		$12.57		$1.68
1608	Etanercept injection, 25 mg	G		$134.42		$18.01
1609	Rho(D) immune globulin h, sd, 100 iu	G		$20.55		$2.51
1611	Hylan G–F 20 injection, 16 mg	G		$204.87		$27.45
1612	Daclizumab, parenteral, 25 mg	G		$397.29		$53.24
1613	Trastuzumab, 10 mg	G		$48.85		$6.55
1614	Valrubicin, 200 mg	G		$423.23		$56.71
1615	Basiliximab, 20 mg	G		$1,250.01		$167.50
1616	Histrelin Acetate, 0.5 mg	G		$14.91		$2.00
1617	Lepirdin, 50 mg	G		$124.49		$16.68
1618	Von Willebrand factor, per iu	G		$.95		$.13
1619	Ga 67, per mCi	G		$25.97		$3.17
1620	TC 99M Bicisate, per vial	G		$417.53		$55.95
1621	Xe 133, per mCi	G		$28.50		$3.66
1622	TC 99M Mertiatide, per vial	G		$185.82		$24.90
1623	TC 99M Gluceptate	G		$22.61		$2.76
1624	P32 sodium, per mCi	G		$74.10		$9.04
1625	IN 111 Pentetreotide, per mCi	G		$283.42		$37.98
1626	TC 99M Oxidronate, per vial	G		$38.38		$4.68
1627	TC-99 labeled red blood cell, per test	G		$38.95		$4.75
1628	P32 phosphate chromic, per mCi	G		$137.12		$16.73
1700	Authen Mick TP brachy needle	H				
1701	Medtec MT-BT-5201-25 ndl	H				
1702	WWMT brachytx needle	H				
1703	Mentor Prostate Brachy	H				
1704	MT-BT-5001-25/5051-25	H				
1705	Best Flexi Brachy Needle	H				
1706	Indigo Prostate Seeding Ndl	H				
1707	Varisource Implt Ndl	H				
1708	UroMed Prostate Seed Ndl	H				
1709	Remington Brachytx Needle	H				
1710	US Biopsy Prostate Needle	H				
1711	MD Tech brachytx needle	H				
1712	Imagyn brachytx needle	H				
1790	Iridium 192 HDR	H				
1791	OncoSeed, Rapid Strand I-125	H				
1792	UroMed I-125 Brachy seed	H				
1793	Bard InterSource P-103 seed	H				

ADDENDUM A.—LIST OF HOSPITAL OUTPATIENT AMBULATORY PAYMENT CLASSIFICATIONS WITH STATUS INDICATORS, RELATIVE WEIGHTS, PAYMENT RATES, AND COINSURANCE AMOUNTS, CALENDAR YEAR 2001—Continued

APC	Group title	Status indicator	Relative weight	Payment rate	National unadjusted coinsurance	Minimum unadjusted coinsurance
1794	Bard IsoSeed P-103 seed	H				
1795	Bard BrachySource I-125	H				
1796	SourceTech Med I-125	H				
1797	Draximage I-125 seed	H				
1798	Syncor I-125 PharmaSeed	H				
1799	I-Plant I-125 Brachytx seed	H				
1800	Pd-103 brachytx seed	H				
1801	IoGold I-125 brachytx seed	H				
1802	Iridium 192 brachytx seeds	H				
1803	Best Iodine 125 brachytx sds	H				
1804	Best Palladium 103 seeds	H				
1805	IsoStar Iodine-125 seeds	H				
1806	Gold 198	H				
1810	D114S Dilatation Cath	H				
1811	Surgical Dynamics Anchors	H				
1812	OBL Anchors	H				
1850	Repliform 14/21 sq cm	H				
1851	Repliform 24/28 sq cm	H				
1852	TransCyte, per 247 sq cm	H				
1853	Suspend, per 8/14 sq cm	H				
1854	Suspend, per 24/28 sq cm	H				
1855	Suspend, per 36 sq cm	H				
1856	Suspend, per 48 sq cm	H				
1857	Suspend, per 84 sq cm	H				
1858	DuraDerm, per 8/14 sq cm	H				
1859	DuraDerm, per 21/24/28 sq cm	H				
1860	DuraDerm, per 48 sq cm	H				
1861	DuraDerm, per 36 sq cm	H				
1862	DuraDerm, per 72 sq cm	H				
1863	DuraDerm, per 84 sq cm	H				
1864	SpermaTex, per 13.44 sq cm	H				
1865	FasLata, per 8/14 sq cm	H				
1866	FasLata, per 24/28 sq cm	H				
1867	FasLata, per 36/48 sq cm	H				
1868	FasLata, per 96 sq cm	H				
1869	Gore Thyroplasty Dev	H				
1870	DermMatrix, per 16 sq cm	H				
1871	DermMatrix, 32 or 64 sq cm	H				
1872	Dermagraft, per 37.5 sq cm	H				
1873	Bard 3DMax Mesh	H				
1929	Maverick PTCA Cath	H				
1930	Coyote Dil Cath, 20/30/40mm	H				
1931	Talon Dil Cath	H				
1932	Scimed Remedy Dil Cath	H				
1933	Opti-Plast XL/Centurion Cath	H				
1934	Ultraverse 3.5F Bal Dil Cath	H				
1935	Workhorse PTA Bal Cath	H				
1936	Uromax Ultra Bal Dil Cath	H				
1937	Synergy Balloon Dil Cath	H				
1938	UroForce Bal Dil Cath	H				
1939	Raptur, Ninja PTCA Dil Cath	H				
1940	PowerFlex,OPTA 5/LP Bal Cath	H				
1941	Jupiter PTA Dil Cath	H				
1942	Cordis Maxi LD PTA Bal Cath	H				
1943	RXCrossSail OTW OpenSail	H				
1944	Rapid Exchange Bil Dil Cath	H				
1945	Savvy PTA Dil Cath	H				
1946	R1s Rapid Dil Cath	H				
1947	Gazelle Bal Dil Cath	H				
1948	Pursuit Balloon Cath	H				
1949	Oracle Megasonics Cath	H				
1979	Visions PV/Avanar US Cath	H				
1980	Atlantis SR Coronary Cath	H				
1981	PTCA Catheters	H				
2000	Orbiter ST Steerable Cath	H				
2001	Constellation Diag Cath	H				
2002	Irvine 5F Inquiry Diag EP Cath	H				
2003	Irvine 6F Inquiry Diag EP Cath	H				
2004	Biosense EP Cath—Octapolar	H				
2005	Biosense EP Cath—Hexapolar	H				
2006	Biosense EP Cath—Decapolar	H				
2007	Irvine 6F Luma-Cath EP Cath	H				
2008	7F Luma-Cath EP Cath 81910–15	H				
2009	Irvine 7F Luma-Cath EP Cath	H				
2010	Fixed Curve EP Cath	H				
2011	Deflectable Tip Cath—Quad	H				
2012	Celsius Abln Cath	H				
2013	Celsius Large Abln Cath	H				

ADDENDUM A.—LIST OF HOSPITAL OUTPATIENT AMBULATORY PAYMENT CLASSIFICATIONS WITH STATUS INDICATORS, RELATIVE WEIGHTS, PAYMENT RATES, AND COINSURANCE AMOUNTS, CALENDAR YEAR 2001—Continued

APC	Group title	Status indicator	Relative weight	Payment rate	National unadjusted coinsurance	Minimum unadjusted coinsurance
2014	Celsius II Asym Abln Cath	H				
2015	Celsius II Sym Abln Cath	H				
2016	Navi-Star DS, Navi-Star Ther	H				
2017	Navi-Star Abln Cath	H				
2018	Polaris T Ablation Cath	H				
2019	EP Deflectable Cath	H				
2020	Blazer II XP Abln Cath	H				
2021	SilverFlex EP Cath	H				
2022	CP Chilli Cooled Abln Cath	H				
2023	Chilli Cld AblnCath-std, lg	H				
2100	CP CS Reference Cath	H				
2101	CP RV Reference Cath	H				
2102	CP Radii 7F EP Cath	H				
2103	CP Radii 7F EP Cath w/Track	H				
2104	Lasso Deflectable Cath	H				
2151	Veripath Guiding Cath	H				
2152	Cordis Vista Brite Tip Cath	H				
2153	Bard Viking Cath	H				
2200	Arrow-Trerotola PTD Cath	H				
2300	Varisource Stnd Catheters	H				
2597	CliniCath/kit 16/18 sgl/dbl	H				
2598	CliniCath 18/20/24G-single	H				
2599	CliniCath 16/18G-double	H				
2601	Bard DL Ureteral Cath	H				
2602	Vitesse Laser Cath 1.4/1.7mm	H				
2603	Vitesse Laser Cath 2.0mm	H				
2604	Vitesse E Laser Cath 2.0mm	H				
2605	Extreme Laser Catheter	H				
2606	SpineCath XL Catheter	H				
2607	SpineCath Intradiscal Cath	H				
2608	Scimed 6F Wiseguide Cath	H				
2609	Flexima Bil Drainage Cath	H				
2610	FlexTipPlus Intraspinal Cath	H				
2611	AlgoLine Intraspinal Cath	H				
2612	InDura Catheter	H				
2700	MycroPhylax Plus SC defib	H				
2701	Phylax XM SC defib	H				
2702	Ventak Prizm 2 VR Defib	H				
2703	Ventak Prizm VR HE Defib	H				
2704	Ventak Mini IV+ Defib	H				
2801	Defender IV DR 612 DC defib	H				
2802	Phylax AV DC defib	H				
2803	Ventak Prizm DR HE Defib	H				
2804	Ventak Prizm 2 DR Defib	H				
2805	Jewel AF 7250 Defib	H				
2806	GEM VR 7227 Defib	H				
2807	Contak CD 1823	H				
2808	Contak TR 1241	H				
3002	EasyTrak Defib Lead	H				
3001	Kainox SL/RV defib lead	H				
3003	Endotak SQ Array XP lead	H				
3004	Intervene Defib Lead	H				
3400	Siltex Spectrum, Contour Prof	H				
3401	Saline-Filled Spectrum	H				
3500	Mentor Alpha I Inf Penile Pros	H				
3510	AMS 800 Urinary Pros	H				
3551	Choice/PT Graphix/Luge/Trooper	H				
3552	Hi-Torque Whisper	H				
3553	Cordis guidewires	H				
3554	Jindo guidewire	H				
3555	Wholey Hi-Torque Plus GW	H				
3556	Wave/FlowWire Guidewire	H				
3557	HyTek guidewire	H				
3800	SynchroMed EL infusion pump	H				
3801	Arrow/MicroJect PCA Sys	H				
3851	Elastic UV IOL AA-4203T/TF/TL	H				
4000	Opus G 4621, 4624 SC pmkr	H				
4001	Opus S 4121/4124 SC pmkr	H				
4002	Talent 113 SC pmkr	H				
4003	Kairos SR SC pmkr	H				
4004	Actros SR, Actros SLR SC pmkr	H				
4005	Philos SR/SR-B SC pmkr	H				
4006	Pulsar Max II SR pmkr	H				
4007	Marathon SR pmkr	H				
4008	Discovery II SSI pmkr	H				
4009	Discovery II SR pmkr	H				
4300	Integrity AFx DR 5342 pmkr	H				
4301	Integrity AFx DR 5346 pmkr	H				

ADDENDUM A.—LIST OF HOSPITAL OUTPATIENT AMBULATORY PAYMENT CLASSIFICATIONS WITH STATUS INDICATORS, RELATIVE WEIGHTS, PAYMENT RATES, AND COINSURANCE AMOUNTS, CALENDAR YEAR 2001—Continued

APC	Group title	Status indicator	Relative weight	Payment rate	National unadjusted coinsurance	Minimum unadjusted coinsurance
4302	Affinity VDR 5430 pmkr	H				
4303	Brio 112 DC pmkr	H				
4304	Brio 212, Talent 213/223 DC pmkr	H				
4305	Brio 222 DC pmkr	H				
4306	Brio 220 DC pmkr	H				
4307	Kairos DR DC pmkr	H				
4308	Inos2, Inos2+ DC pmkr	H				
4309	Actros DR,D,DR-A,SLR DC pmkr	H				
4310	Actros DR-B DC pmkr	H				
4311	Philos DR/DR-B/SLR DC pmkr	H				
4312	Pulsar Max II DR pmkr	H				
4313	Marathon DR pmkr	H				
4314	Momentum DR pmkr	H				
4315	Selection AFm pmkr	H				
4316	Discovery II DR	H				
4317	Discovery II DDD	H				
4600	Snynox,Polyrox,Elox,Retrox	H				
4602	Tendril SDX, 1488K pmkr lead	H				
4603	Oscor/Flexion pmkr lead	H				
4604	CrystallineActFix,CapsureFix	H				
4605	CapSure Epi pmkr lead	H				
4606	Flextend pmkr lead	H				
4607	FinelineII/EZ, ThinlineII/EZ	H				
5000	BX Velocity w/Hepacoat	H				
5001	Memotherm Bil Stent, sm, med	H				
5002	Memotherm Bil Stent, large	H				
5003	Memotherm Bil Stent, x-large	H				
5004	PalmazCorinthian IQ Bil Stent	H				
5005	PalmazCorinthian IQ Trans/Bil	H				
5006	PalmazTrans Bil Stent Sys-Med	H				
5007	PalmazTrans XL Bil Stent--40mm	H				
5008	PalmazTrans XL Bil Stent--50mm	H				
5009	VistaFlex Biliary Stent	H				
5010	Rapid Exchange Bil Stent Sys	H				
5011	IntraStent, IntraStent LP	H				
5012	IntraStent DoubleStrut LD	H				
5013	IntraStent DoubleStrut, XS	H				
5014	AVE Bridge Stent Sys-10/17/28	H				
5015	AVE/X3 Bridge Sys, 40-100	H				
5016	Biliary stent single use cov	H				
5017	WallstentRP Bil--20/40/60/68mm	H				
5018	WallstentRP Bil--80/94mm	H				
5019	Flexima Bil Stent Sys	H				
5020	Smart Nitinol Stent--20mm	H				
5021	Smart Nitinol Stent--40/60mm	H				
5022	Smart Nitinol Stent--80mm	H				
5023	BX Velocity Stent--8/13mm	H				
5024	BX Velocity Stent--18mm	H				
5025	BX Velocity Stent--23mm	H				
5026	BX Velocity Stent--28/33mm	H				
5027	BX Velocity w/Hep--8/13mm	H				
5028	BX Velocity w/Hep--18mm	H				
5029	BX Velocity w/Hep--23mm	H				
5030	Stent, coronary, S660 9/12mm	H				
5031	Stent,coronary, S660 15/18mm	H				
5032	Stent,coronary, S660 24/30mm	H				
5033	Niroyal Stent Sys, 9mm	H				
5034	Niroyal Stent Sys, 12/15mm	H				
5035	Niroyal Stent Sys, 18mm	H				
5036	Niroyal Stent Sys, 25mm	H				
5037	Niroyal Stent Sys, 31mm	H				
5038	BX Velocity Stent w/Raptor	H				
5039	IntraCoil Periph Stent--40mm	H				
5040	IntraCoil Periph Stent--60mm	H				
5041	BeStent Over-the-Wire 24/30mm	H				
5042	BeStent Over-the-Wire 18mm	H				
5043	BeStent Over-the-Wire 15mm	H				
5044	BeStent Over-the-Wire 9/12mm	H				
5045	Multilink Tetra Cor Stent Sys	H				
5046	Radius 20mm cor stent	H				
5047	Niroyal Elite Cor Stent Sys	H				
5048	GR II Coronary Stent	H				
5130	Wilson-Cook Colonic Z-Stent	H				
5131	Bard Colorectal Stent-60mm	H				
5132	Bard Colorectal Stent-80mm	H				
5133	Bard Colorectal Stent-100mm	H				
5134	Enteral Wallstent—90mm	H				
5279	Contour/Percuflex Stent	H				

ADDENDUM A.—LIST OF HOSPITAL OUTPATIENT AMBULATORY PAYMENT CLASSIFICATIONS WITH STATUS INDICATORS, RELATIVE WEIGHTS, PAYMENT RATES, AND COINSURANCE AMOUNTS, CALENDAR YEAR 2001—Continued

APC	Group title	Status indicator	Relative weight	Payment rate	National unadjusted coinsurance	Minimum unadjusted coinsurance
5280	Inlay Dbl Ureteral Stent	H				
5281	Wallgraft Trach Sys 70mm	H				
5282	Wallgraft Trach Sys 20/30/50	H				
5283	Wallstent/RP TIPS—80mm	H				
5284	Wallstent TrachUltraFlex	H				
5600	Closure dev, VasoSeal ES	H				
5601	VasoSeal Model 1000	H				
6001	Composix Mesh 8/21 in	H				
6002	Composix Mesh 32 in	H				
6003	Composix Mesh 48 in	H				
6004	Composix Mesh 80 in	H				
6005	Composix Mesh 140 in	H				
6006	Composix Mesh 144 in	H				
6012	Pelvicol Collagen 8/14 sq cm	H				
6013	Pelvicol Collagen 21/24/28 sq cm	H				
6014	Pelvicol Collagen 36 sq cm	H				
6015	Pelvicol Collagen 48 sq cm	H				
6016	Pelvicol Collagen 96 sq cm	H				
6017	Gore-Tex DualMesh 75/96 sq cm	H				
6018	Gore-Tex DualMesh 150 sq cm	H				
6019	Gore-Tex DualMesh 285 sq cm	H				
6020	Gore-Tex DualMesh 432 sq cm	H				
6021	Gore-Tex DualMesh 600 sq cm	H				
6022	Gore-Tex DualMesh 884 sq cm	H				
6023	Gore-TexPlus 1mm, 75/96sq cm	H				
6024	Gore-TexPlus 1mm, 150sq cm	H				
6025	Gore-TexPlus 1mm, 285sq cm	H				
6026	Gore-TexPlus 1mm, 432sq cm	H				
6027	Gore-TexPlus 1mm, 600sq cm	H				
6028	Gore-TexPlus 1mm, 884 sq cm	H				
6029	Gore-TexPlus 2mm, 150 sq cm	H				
6030	Gore-TexPlus 2mm, 285 sq cm	H				
6031	Gore-TexPlus 2mm, 432 sq cm	H				
6032	Gore-TexPlus 2mm, 600 sq cm	H				
6033	Gore-TexPlus 2mm, 884 sq cm	H				
6034	Bard ePTFE: 150 sq cm--2mm	H				
6035	Bard ePTFE 150 sqcm-1mm,75-2mm	H				
6036	Bard ePTFE: 50/75 sqcm-1,2mm	H				
6037	Bard ePTFE: 300 sq cm-1,2mm	H				
6038	Bard ePTFE: 600 sq cm-1mm	H				
6039	Bard ePTFE: 884 sq cm-1mm	H				
6040	Bard ePTFE: 600 sq cm-2mm	H				
6041	Bard ePTFE: 884 sq cm-2mm	H				
6050	Female Sling Sys w/wo Matrl	H				
6051	Stratasis Sling, 20/40 cm	H				
6052	Stratasis Sling, 60 cm	H				
6053	Surgisis Soft Graft	H				
6054	Surgisis Enhanced Graft	H				
6055	Surgisis Enhanced Tissue	H				
6056	Surgisis Soft Tissue Graft	H				
6057	Surgisis Hernia Graft	H				
6058	SurgiPro Hernia Plug, med/lg	H				
6080	Male Sling Sys w/wo Matrl	H				
6200	Exxcel Sft ePTFE vas graft	H				
6201	Impra Venaflo--10/20cm	H				
6202	Impra Venaflo-30/40cm	H				
6203	Impra Venaflo-50cm,vt45	H				
6204	Impra Venaflo-stepped	H				
6205	Impra Carboflo—10cm	H				
6206	Impra Carboflo—20cm	H				
6207	Impra Carboflo—30/35/40cm	H				
6208	Impra Carboflo—40/50cm	H				
6209	Impra Carboflo—ctrflex	H				
6210	Exxcel ePTFE vas graft	H				
6300	Vanguard III Endovas Graft	H				
6500	Preface Guiding Sheath	H				
6501	Soft Tip Sheaths	H				
6502	Perry Exchange Dilator	H				
6525	Spectranetics Laser Sheath	H				
6600	Micro Litho Flex Probes	H				
6650	Fast-Cath Guiding Introducer	H				
6651	Seal-AwayGuiding Introducer	H				
6652	Bard Excalibur Introducer	H				
6700	Focal Seal-L	H				
7000	Amifostine, 500 mg	G		$350.31		$46.94
7001	Amphotericin B lipid complex, 50 mg	G		$95.00		$12.73
7003	Epoprostenol injection 0.5 mg	G		$16.53		$2.22
7004	Immune globulin 5 gms	G		$272.80		$33.28

ADDENDUM A.—LIST OF HOSPITAL OUTPATIENT AMBULATORY PAYMENT CLASSIFICATIONS WITH STATUS INDICATORS, RELATIVE WEIGHTS, PAYMENT RATES, AND COINSURANCE AMOUNTS, CALENDAR YEAR 2001—Continued

APC	Group title	Status indicator	Relative weight	Payment rate	National unadjusted coinsurance	Minimum unadjusted coinsurance
7005	Gonadorelin hydroch, 100 mcg	G		$14.80		$1.98
7007	Milrinone lactate, per 5 ml, inj	K	0.47	$23.31		$4.66
7010	Morphine sulfate (preservative free) 10 mg	G		$7.41		$.99
7011	Oprelvekin injection, 5 mg	G		$236.31		$31.67
7014	Fentanyl citrate inj up 2 ml	G		$0.98		$0.13
7015	Busulfan, oral, 2 mg	G		$1.73		$0.23
7019	Aprotinin, 10,000 kiu	G		$196.35		$26.31
7022	Elliot's B solution, per ml	G		$14.25		$1.91
7023	Treatment for bladder calculi, per 500 ml	G		$23.54		$3.15
7024	Corticorelin ovine triflutate, per 0.1 mg	G		$353.88		$45.77
7025	Digoxin immune FAB (Ovine), 40 mg vial	G		$530.44		$64.71
7026	Ethanolamine oleate, 100 mg	G		$27.21		$3.65
7027	Fomepizole, 1.5 mg	G		$728.33		$97.60
7028	Fosphenytoin, 50 mg	G		$8.55		$1.15
7029	Glatiramer acetate, 20 mg	G		$27.40		$3.67
7030	Hemin, 1 mg	G		$0.90		$0.12
7031	Octreotide acetate injection 1mg	G		$115.34		$15.46
7032	Sermorelin acetate, 0.5 mg	G		$15.78		$2.11
7033	Somatrem, 5 mg	G		$199.50		$26.73
7034	Somatropin, 1 mg (any derivation)	G		$39.90		$5.35
7035	Teniposide, 50 mg	G		$195.28		$26.17
7036	Urokinase, inj, IV, 250,000 I.U.	K	6.78	$336.29		$67.26
7037	Urofollitropin, 75 I.U.	G		$69.73		$9.34
7038	Muromonab-CD3, 5 mg	G		$741.00		$99.29
7039	Pegademase bovine inj 25 I.U	G		$139.33		$18.67
7040	Pentastarch 10% inj, 100 ml	G		$15.11		$2.04
7041	Tirofiban hydrochloride 12.5 mg	G		$399.00		$53.47
7042	Capecitabine, oral, 150 mg	G		$1.94		$0.26
7043	Infliximab injection 10 mg	G		$58.08		$7.78
7045	Trimetrexate glucoronate 25 mg	G		$69.83		$9.36
7046	Doxorubicin hcl liposome inj 10 mg	G		$311.72		$41.77
7047	Droperidol/fentanyl inj	G		$7.02		$0.90
7048	Alteplase, 1 mg	K	0.38	$18.70		$3.74
7049	Filgrastim 480 mcg injection	G		$273.03		$35.06
7315	Sodium hyaluronate, 20 mg	G		$125.59		$16.83
8099	Spectranetics Lead Lock Dev	H				
8100	Adhesion barrier, ADCON–L	H				
8102	SurgiVision Esoph Coil	H				
9000	Na chromate Cr51, per 0.25mCi	G		$259.36		$34.75
9001	Linezolid inj, 200mg	J		$34.14		$4.57
9002	Tenecteplase, 50mg/vial	J		$2,612.50		$350.08
9003	Palivizumab, per 50mg	J		$664.49		$89.04
9004	Gemtuzumab ozogamicin inj,5mg	J		$1,929.69		$258.58
9005	Reteplase inj, half-kit, 18.8 mg/vial	G		$1,306.25		$175.04
9006	Tacrolimus inj, per 5mg (1 amp)	J		$109.83		$14.72
9007	Baclofen Intrathecal kit-1amp	G		$79.80		$10.69
9008	Baclofen Refill Kit—500mcg	G		$222.30		$29.79
9009	Baclofen Refill Kit—2000mcg	G		$467.40		$62.63
9010	Baclofen Refill Kit—4000mcg	G		$820.80		$109.99
9011	Caffeine Citrate, inj, 1ml	G		$12.22		$1.57
9100	Iodinated I-131 Albumin	G		$246.05		$30.02
9102	51 Na chromate, 50mCi	G		$216.60		$26.43
9103	Na Iothalamate I-125, 10uCi	G		$12.27		$1.50
9104	Anti-thymocyte globulin,25mg	G		$251.75		$33.73
9105	Hep B imm glob, per 1 ml	G		$152.00		$20.37
9106	Sirolimus 1mg/ml	J		$6.51		$.87
9107	Tinzaparin sodium, 2ml vial	J		$159.60		$20.50
9108	Thyrotropin Alfa,1.1 mg	G		$494.00		$70.72
9109	Tirofiban hydrochloride 6.25 mg	G		$199.50		$28.56
9217	Leuprolide acetate for depot suspension, 7.5 mg	G		$592.60		$79.40
9500	Platelets, irrad, ea unit	K	1.77	$87.97		$17.59
9501	Platelets, pheresis, ea unit	K	9.69	$480.75		$96.15
9502	Platelets, pher/irrad, ea unit	K	10.52	$521.66		$104.33
9503	Fresh frozen plasma, ea unit	K	1.65	$81.83		$16.37
9504	RBC, deglycerolized, ea unit	K	4.35	$215.83		$43.17

ADDENDUM A.—LIST OF HOSPITAL OUTPATIENT AMBULATORY PAYMENT CLASSIFICATIONS WITH STATUS INDICATORS, RELATIVE WEIGHTS, PAYMENT RATES, AND COINSURANCE AMOUNTS, CALENDAR YEAR 2001—Continued

APC	Group title	Status indicator	Relative weight	Payment rate	National unadjusted coinsurance	Minimum unadjusted coinsurance
9505	RBC, irradiated, ea unit	K	2.58	$127.86		$25.57
9998	Enoxaparin	G		$5.53		$0.79

ADDENDUM B.—HOSPITAL OUTPATIENT DEPARTMENT (HOPD) PAYMENT STATUS BY HCPCS CODE AND RELATED INFORMATION

CPT/ HCPCS	HOPD Status Indicator	Description	APC	Relative Weight	Payment Rate	National Unadjusted Coinsurance	Minimum Unadjusted Coinsurance
00100	N	Anesth, salivary gland					
00102	N	Anesth, repair of cleft lip					
00103	N	Anesth, blepharoplasty					
00104	N	Anesth, electroshock					
00120	N	Anesth, ear surgery					
00124	N	Anesth, ear exam					
00126	N	Anesth, tympanotomy					
00140	N	Anesth, procedures on eye					
00142	N	Anesth, lens surgery					
00144	N	Anesth, corneal transplant					
00145	N	Anesth, vitrectomy					
00147	N	Anesth, iridectomy					
00148	N	Anesth, eye exam					
00160	N	Anesth, nose/sinus surgery					
00162	N	Anesth, nose/sinus surgery					
00164	N	Anesth, biopsy of nose					
00170	N	Anesth, procedure on mouth					
00172	N	Anesth, cleft palate repair					
00174	N	Anesth, pharyngeal surgery					
00176	N	Anesth, pharyngeal surgery					
00190	N	Anesth, facial bone surgery					
00192	N	Anesth, facial bone surgery					
00210	N	Anesth, open head surgery					
00212	N	Anesth, skull drainage					
00214	N	Anesth, skull drainage					
00215	N	Anesth, skull fracture					
00216	N	Anesth, head vessel surgery					
00218	N	Anesth, special head surgery					
00220	N	Anesth, spinal fluid shunt					
00222	N	Anesth, head nerve surgery					
00300	N	Anesth, head/neck/ptrunk					
00320	N	Anesth, neck organ surgery					
00322	N	Anesth, biopsy of thyroid					
00350	N	Anesth, neck vessel surgery					
00352	N	Anesth, neck vessel surgery					
00400	N	Anesth, skin, ext/per/atrunk					
00402	N	Anesth, surgery of breast					
00404	N	Anesth, surgery of breast					
00406	N	Anesth, surgery of breast					
00410	N	Anesth, correct heart rhythm					
00420	N	Anesth, skin surgery, back					
00450	N	Anesth, surgery of shoulder					
00452	N	Anesth, surgery of shoulder					
00454	N	Anesth, collar bone biopsy					
00470	N	Anesth, removal of rib					
00472	N	Anesth, chest wall repair					
00474	N	Anesth, surgery of rib(s)					
00500	N	Anesth, esophageal surgery					
00520	N	Anesth, chest procedure					
00522	N	Anesth, chest lining biopsy					
00524	N	Anesth, chest drainage					
00528	N	Anesth, chest partition view					
00530	N	Anesth, pacemaker insertion					
00532	N	Anesth, vascular access					
00534	N	Anesth, cardioverter/defib					
*00537	N	Anesth, cardiac electrophys					
00540	N	Anesth, chest surgery					
00542	N	Anesth, release of lung					
00544	N	Anesth, chest lining removal					
00546	N	Anesth, lung,chest wall surg					
00548	N	Anesth, trachea,bronchi surg					
*00550	N	Anesth, sternal debridement					
00560	N	Anesth, open heart surgery					
00562	N	Anesth, open heart surgery					

CPT codes and descriptions only are copyright American Medical Association. All Rights Reserved. Applicable FARS/DFARS Apply.
Copyright American Dental Association. All rights reserved.
*Code is new in 2001.

ADDENDUM B.—HOSPITAL OUTPATIENT DEPARTMENT (HOPD) PAYMENT STATUS BY HCPCS CODE AND RELATED INFORMATION—Continued

CPT/ HCPCS	HOPD Status Indicator	Description	APC	Relative Weight	Payment Rate	National Unadjusted Coinsurance	Minimum Unadjusted Coinsurance
*00563	N	Anesth, openproc w/pump					
*00566	N	Anesth CABG w/o pump					
00580	N	Anesth heart/lung transplant					
00600	N	Anesth, spine, cord surgery					
00604	N	Anesth, surgery of vertebra					
00620	N	Anesth, spine, cord surgery					
00622	N	Anesth, removal of nerves					
00630	N	Anesth, spine, cord surgery					
00632	N	Anesth, removal of nerves					
00634	N	Anesth for chemonucleolysis					
*00635	N	Anesth, lumbar puncture					
00670	N	Anesth, spine, cord surgery					
00700	N	Anesth, abdominal wall surg					
00702	N	Anesth, for liver biopsy					
00730	N	Anesth, abdominal wall surg					
00740	N	Anesth, upper gi visualize					
00750	N	Anesth, repair of hernia					
00752	N	Anesth, repair of hernia					
00754	N	Anesth, repair of hernia					
00756	N	Anesth, repair of hernia					
00770	N	Anesth, blood vessel repair					
00790	N	Anesth, surg upper abdomen					
00792	N	Anesth, part liver removal					
00794	N	Anesth, pancreas removal					
00796	N	Anesth, for liver transplant					
00800	N	Anesth, abdominal wall surg					
00802	N	Anesth, fat layer removal					
00810	N	Anesth, low intestine scope					
00820	N	Anesth, abdominal wall surg					
00830	N	Anesth, repair of hernia					
00832	N	Anesth, repair of hernia					
00840	N	Anesth, surg lower abdomen					
00842	N	Anesth, amniocentesis					
00844	N	Anesth, pelvis surgery					
00846	N	Anesth, hysterectomy					
00848	N	Anesth, pelvic organ surg					
00850	N	Anesth, cesarean section					
00855	N	Anesth, hysterectomy					
00857	N	Analgesia, labor & c-section					
00860	N	Anesth, surgery of abdomen					
00862	N	Anesth, kidney/ureter surg					
00864	N	Anesth, removal of bladder					
00865	N	Anesth, removal of prostate					
00866	N	Anesth, removal of adrenal					
00868	N	Anesth, kidney transplant					
00870	N	Anesth, bladder stone surg					
00872	N	Anesth kidney stone destruct					
00873	N	Anesth kidney stone destruct					
00880	N	Anesth, abdomen vessel surg					
00882	N	Anesth, major vein ligation					
00884	N	Anesth, major vein revision					
00900D	N	Anesth, perineal procedure					
00902	N	Anesth, anorectal surgery					
00904	N	Anesth, perineal surgery					
00906	N	Anesth, removal of vulva					
00908	N	Anesth, removal of prostate					
00910	N	Anesth, bladder surgery					
00912	N	Anesth, bladder tumor surg					
00914	N	Anesth, removal of prostate					
00916	N	Anesth, bleeding control					
00918	N	Anesth, stone removal					
00920	N	Anesth, genitalia surgery					
00922	N	Anesth, sperm duct surgery					
27280	C	Fusion of sacroiliac joint					
27282	C	Fusion of pubic bones					
27284	C	Fusion of hip joint					
27286	C	Fusion of hip joint					
27290	C	Amputation of leg at hip					
27295	C	Amputation of leg at hip					
27299	T	Pelvis/hip joint surgery	0043	1.64	$81.34	$25.46	$16.27
27301	T	Drain thigh/knee lesion	0008	6.15	$305.02	$113.67	$61.00
27303	C	Drainage of bone lesion					
27305	T	Incise thigh tendon & fascia	0049	15.04	$745.93	$356.95	$149.19
27306	T	Incision of thigh tendon	0049	15.04	$745.93	$356.95	$149.19

CPT codes and descriptions only are copyright American Medical Association. All Rights Reserved. Applicable FARS/DFARS Apply.
Copyright American Dental Association. All rights reserved.
*Code is new in 2001.

ADDENDUM B.—HOSPITAL OUTPATIENT DEPARTMENT (HOPD) PAYMENT STATUS BY HCPCS CODE AND RELATED INFORMATION—Continued

CPT/ HCPCS	HOPD Status Indicator	Description	APC	Relative Weight	Payment Rate	National Unadjusted Coinsurance	Minimum Unadjusted Coinsurance
27307	T	Incision of thigh tendons	0049	15.04	$745.93	$356.95	$149.19
27310	T	Exploration of knee joint	0050	21.13	$1,047.96	$513.86	$209.59
27315	T	Partial removal, thigh nerve	0220	13.96	$692.36	$326.21	$138.47
27320	T	Partial removal, thigh nerve	0220	13.96	$692.36	$326.21	$138.47
27323	T	Biopsy, thigh soft tissues	0021	10.49	$520.26	$236.51	$104.05
27324	T	Biopsy, thigh soft tissues	0022	12.49	$619.45	$292.94	$123.89
27327	T	Removal of thigh lesion	0022	12.49	$619.45	$292.94	$123.89
27328	T	Removal of thigh lesion	0022	12.49	$619.45	$292.94	$123.89
27329	T	Remove tumor, thigh/knee	0022	12.49	$619.45	$292.94	$123.89
27330	T	Biopsy, knee joint lining	0050	21.13	$1,047.96	$513.86	$209.59
27331	T	Explore/treat knee joint	0050	21.13	$1,047.96	$513.86	$209.59
27332	T	Removal of knee cartilage	0050	21.13	$1,047.96	$513.86	$209.59
27333	T	Removal of knee cartilage	0050	21.13	$1,047.96	$513.86	$209.59
27334	T	Remove knee joint lining	0050	21.13	$1,047.96	$513.86	$209.59
27335	T	Remove knee joint lining	0050	21.13	$1,047.96	$513.86	$209.59
27340	T	Removal of kneecap bursa	0049	15.04	$745.93	$356.95	$149.19
27345	T	Removal of knee cyst	0049	15.04	$745.93	$356.95	$149.19
27347	T	Remove knee cyst	0049	15.04	$745.93	$356.95	$149.19
27350	T	Removal of kneecap	0050	21.13	$1,047.96	$513.86	$209.59
27355	T	Remove femur lesion	0050	21.13	$1,047.96	$513.86	$209.59
27356	T	Remove femur lesion/graft	0050	21.13	$1,047.96	$513.86	$209.59
27357	T	Remove femur lesion/graft	0050	21.13	$1,047.96	$513.86	$209.59
27358	T	Remove femur lesion/fixation	0050	21.13	$1,047.96	$513.86	$209.59
27360	T	Partial removal, leg bone(s)	0050	21.13	$1,047.96	$513.86	$209.59
27365	C	Extensive leg surgery					
27370	N	Injection for knee x-ray					
27372	T	Removal of foreign body	0022	12.49	$619.45	$292.94	$123.89
27380	T	Repair of kneecap tendon	0049	15.04	$745.93	$356.95	$149.19
27381	T	Repair/graft kneecap tendon	0049	15.04	$745.93	$356.95	$149.19
27385	T	Repair of thigh muscle	0049	15.04	$745.93	$356.95	$149.19
27386	T	Repair/graft of thigh muscle	0049	15.04	$745.93	$356.95	$149.19
27390	T	Incision of thigh tendon	0049	15.04	$745.93	$356.95	$149.19
27391	T	Incision of thigh tendons	0049	15.04	$745.93	$356.95	$149.19
27392	T	Incision of thigh tendons	0049	15.04	$745.93	$356.95	$149.19
27393	T	Lengthening of thigh tendon	0050	21.13	$1,047.96	$513.86	$209.59
27394	T	Lengthening of thigh tendons	0050	21.13	$1,047.96	$513.86	$209.59
27395	T	Lengthening of thigh tendons	0051	27.76	$1,376.79	$675.24	$275.36
27396	T	Transplant of thigh tendon	0050	21.13	$1,047.96	$513.86	$209.59
27397	T	Transplants of thigh tendons	0051	27.76	$1,376.79	$675.24	$275.36
27400	T	Revise thigh muscles/tendons	0051	27.76	$1,376.79	$675.24	$275.36
27403	T	Repair of knee cartilage	0050	21.13	$1,047.96	$513.86	$209.59
27405	T	Repair of knee ligament	0051	27.76	$1,376.79	$675.24	$275.36
27407	T	Repair of knee ligament	0051	27.76	$1,376.79	$675.24	$275.36
27409	T	Repair of knee ligaments	0051	27.76	$1,376.79	$675.24	$275.36
27418	T	Repair degenerated kneecap	0051	27.76	$1,376.79	$675.24	$275.36
27420	T	Revision of unstable kneecap	0051	27.76	$1,376.79	$675.24	$275.36
27422	T	Revision of unstable kneecap	0051	27.76	$1,376.79	$675.24	$275.36
27424	T	Revision/removal of kneecap	0051	27.76	$1,376.79	$675.24	$275.36
27425	T	Lateral retinacular release	0050	21.13	$1,047.96	$513.86	$209.59
27427	T	Reconstruction, knee	0052	36.16	$1,793.39	$930.91	$358.68
27428	T	Reconstruction, knee	0052	36.16	$1,793.39	$930.91	$358.68
27429	T	Reconstruction, knee	0052	36.16	$1,793.39	$930.91	$358.68
27430	T	Revision of thigh muscles	0051	27.76	$1,376.79	$675.24	$275.36
27435	T	Incision of knee joint	0051	27.76	$1,376.79	$675.24	$275.36
27437	T	Revise kneecap	0047	22.09	$1,095.58	$537.03	$219.12
27438	T	Revise kneecap with implant	0048	29.06	$1,441.26	$725.94	$288.25
27440	T	Revision of knee joint	0047	22.09	$1,095.58	$537.03	$219.12
27441	T	Revision of knee joint	0047	22.09	$1,095.58	$537.03	$219.12
27442	T	Revision of knee joint	0047	22.09	$1,095.58	$537.03	$219.12
27443	T	Revision of knee joint	0047	22.09	$1,095.58	$537.03	$219.12
27445	C	Revision of knee joint					
27446	C	Revision of knee joint					
27447	C	Total knee replacement					
27448	C	Incision of thigh					
27450	C	Incision of thigh					
27454	C	Realignment of thigh bone					
27455	C	Realignment of knee					
27457	C	Realignment of knee					
27465	C	Shortening of thigh bone					
27466	C	Lengthening of thigh bone					
27468	C	Shorten/lengthen thighs					
27470	C	Repair of thigh					
27472	C	Repair/graft of thigh					
27475	C	Surgery to stop leg growth					

CPT codes and descriptions only are copyright American Medical Association. All Rights Reserved. Applicable FARS/DFARS Apply.
Copyright American Dental Association. All rights reserved.
*Code is new in 2001.

ADDENDUM B.—HOSPITAL OUTPATIENT DEPARTMENT (HOPD) PAYMENT STATUS BY HCPCS CODE AND RELATED INFORMATION—Continued

CPT/ HCPCS	HOPD Status Indicator	Description	APC	Relative Weight	Payment Rate	National Unadjusted Coinsurance	Minimum Unadjusted Coinsurance
27477	C	Surgery to stop leg growth					
27479	C	Surgery to stop leg growth					
27485	C	Surgery to stop leg growth					
27486	C	Revise/replace knee joint					
27487	C	Revise/replace knee joint					
27488	C	Removal of knee prosthesis					
27495	C	Reinforce thigh					
27496	T	Decompression of thigh/knee	0049	15.04	$745.93	$356.95	$149.19
27497	T	Decompression of thigh/knee	0049	15.04	$745.93	$356.95	$149.19
27498	T	Decompression of thigh/knee	0049	15.04	$745.93	$356.95	$149.19
27499	T	Decompression of thigh/knee	0049	15.04	$745.93	$356.95	$149.19
27500	T	Treatment of thigh fracture	0044	2.17	$107.63	$38.08	$21.53
27501	T	Treatment of thigh fracture	0044	2.17	$107.63	$38.08	$21.53
27502	T	Treatment of thigh fracture	0044	2.17	$107.63	$38.08	$21.53
27503	T	Treatment of thigh fracture	0044	2.17	$107.63	$38.08	$21.53
27506	C	Treatment of thigh fracture					
27507	C	Treatment of thigh fracture					
27508	T	Treatment of thigh fracture	0044	2.17	$107.63	$38.08	$21.53
27509	T	Treatment of thigh fracture	0046	22.29	$1,105.50	$535.76	$221.10
27510	T	Treatment of thigh fracture	0044	2.17	$107.63	$38.08	$21.53
27511	C	Treatment of thigh fracture					
27513	C	Treatment of thigh fracture					
27514	C	Treatment of thigh fracture					
27516	T	Treat thigh fx growth plate	0044	2.17	$107.63	$38.08	$21.53
27517	T	Treat thigh fx growth plate	0044	2.17	$107.63	$38.08	$21.53
27519	C	Treat thigh fx growth plate					
27520	T	Treat kneecap fracture	0044	2.17	$107.63	$38.08	$21.53
27524	T	Treat kneecap fracture	0046	22.29	$1,105.50	$535.76	$221.10
27530	T	Treat knee fracture	0044	2.17	$107.63	$38.08	$21.53
27532	T	Treat knee fracture	0044	2.17	$107.63	$38.08	$21.53
27535	C	Treat knee fracture					
27536	C	Treat knee fracture					
27538	T	Treat knee fracture(s)	0044	2.17	$107.63	$38.08	$21.53
27540	C	Treat knee fracture					
27550	T	Treat knee dislocation	0044	2.17	$107.63	$38.08	$21.53
27552	T	Treat knee dislocation	0045	11.02	$546.55	$277.12	$109.31
27556	C	Treat knee dislocation					
27557	C	Treat knee dislocation					
27558	C	Treat knee dislocation					
27560	T	Treat kneecap dislocation	0044	2.17	$107.63	$38.08	$21.53
27562	T	Treat kneecap dislocation	0045	11.02	$546.55	$277.12	$109.31
27566	T	Treat kneecap dislocation	0046	22.29	$1,105.50	$535.76	$221.10
27570	T	Fixation of knee joint	0045	11.02	$546.55	$277.12	$109.31
27580	C	Fusion of knee					
27590	C	Amputate leg at thigh					
27591	C	Amputate leg at thigh					
27592	C	Amputate leg at thigh					
27594	T	Amputation follow-up surgery	0049	15.04	$745.93	$356.95	$149.19
27596	C	Amputation follow-up surgery					
27598	C	Amputate lower leg at knee					
27599	T	Leg surgery procedure	0044	2.17	$107.63	$38.08	$21.53
27600	T	Decompression of lower leg	0049	15.04	$745.93	$356.95	$149.19
27601	T	Decompression of lower leg	0049	15.04	$745.93	$356.95	$149.19
27602	T	Decompression of lower leg	0049	15.04	$745.93	$356.95	$149.19
27603	T	Drain lower leg lesion	0008	6.15	$305.02	$113.67	$61.00
27604	T	Drain lower leg bursa	0049	15.04	$745.93	$356.95	$149.19
27605	T	Incision of achilles tendon	0055	15.47	$767.26	$355.34	$153.45
00924	N	Anesth, testis exploration					
00926	N	Anesth, removal of testis					
00928	N	Anesth, removal of testis					
00930	N	Anesth, testis suspension					
00932	N	Anesth, amputation of penis					
00934	N	Anesth, penis, nodes removal					
00936	N	Anesth, penis, nodes removal					
00938	N	Anesth, insert penis device					
00940	N	Anesth, vaginal procedures					
00942	N	Anesth, surgery on vagina					
00944	N	Anesth, vaginal hysterectomy					
00946	N	Anesth, vaginal delivery					
00948	N	Anesth, repair of cervix					
00950	N	Anesth, vaginal endoscopy					
00952	N	Anesth, hysteroscope/graph					
00955	N	Analgesia, vaginal delivery					
01000	N	Anesth, skin surgery, pelvis					

CPT codes and descriptions only are copyright American Medical Association. All Rights Reserved. Applicable FARS/DFARS Apply.
Copyright American Dental Association. All rights reserved.
*Code is new in 2001.

ADDENDUM B.—HOSPITAL OUTPATIENT DEPARTMENT (HOPD) PAYMENT STATUS BY HCPCS CODE AND RELATED INFORMATION—Continued

CPT/ HCPCS	HOPD Status Indicator	Description	APC	Relative Weight	Payment Rate	National Unadjusted Coinsurance	Minimum Unadjusted Coinsurance
01110	N	Anesth, skin surgery, pelvis					
*01112	N	Anesth, bone aspirate/bx					
01120	N	Anesth, pelvis surgery					
01130	N	Anesth, body cast procedure					
01140	N	Anesth, amputation at pelvis					
01150	N	Anesth, pelvic tumor surgery					
01160	N	Anesth, pelvis procedure					
01170	N	Anesth, pelvis surgery					
01180	N	Anesth, pelvis nerve removal					
01190	N	Anesth, pelvis nerve removal					
01200	N	Anesth, hip joint procedure					
01202	N	Anesth, arthroscopy of hip					
01210	N	Anesth, hip joint surgery					
01212	N	Anesth, hip disarticulation					
01214	N	Anesth, replacement of hip					
*01215	N	Anesth, revise hip repair					
01220	N	Anesth, procedure on femur					
01230	N	Anesth, surgery of femur					
01232	N	Anesth, amputation of femur					
01234	N	Anesth, radical femur surg					
01240	N	Anesth, upper leg skin surg					
01250	N	Anesth, upper leg surgery					
01260	N	Anesth, upper leg veins surg					
01270	N	Anesth, thigh arteries surg					
01272	N	Anesth, femoral artery surg					
01274	N	Anesth, femoral embolectomy					
01300	N	Anesth, skin surgery, knee					
01320	N	Anesth, knee area surgery					
01340	N	Anesth, knee area procedure					
01360	N	Anesth, knee area surgery					
01380	N	Anesth, knee joint procedure					
01382	N	Anesth, knee arthroscopy					
01390	N	Anesth, knee area procedure					
01392	N	Anesth, knee area surgery					
01400	N	Anesth, knee joint surgery					
01402	N	Anesth, replacement of knee					
01404	N	Anesth, amputation at knee					
01420	N	Anesth, knee joint casting					
01430	N	Anesth, knee veins surgery					
01432	N	Anesth, knee vessel surg					
01440	N	Anesth, knee arteries surg					
01442	N	Anesth, knee artery surg					
01444	N	Anesth, knee artery repair					
01460	N	Anesth, lower leg skin surg					
01462	N	Anesth, lower leg procedure					
01464	N	Anesth, ankle arthroscopy					
01470	N	Anesth, lower leg surgery					
01472	N	Anesth, achilles tendon surg					
01474	N	Anesth, lower leg surgery					
01480	N	Anesth, lower leg bone surg					
01482	N	Anesth, radical leg surgery					
01484	N	Anesth, lower leg revision					
01486	N	Anesth, ankle replacement					
01490	N	Anesth, lower leg casting					
01500	N	Anesth, leg arteries surg					
01502	N	Anesth, lwr leg embolectomy					
01520	N	Anesth, lower leg vein surg					
01522	N	Anesth, lower leg vein surg					
01600	N	Anesth, shoulder skin surg					
01610	N	Anesth, surgery of shoulder					
01620	N	Anesth, shoulder procedure					
01622	N	Anesth, shoulder arthroscopy					
01630	N	Anesth, surgery of shoulder					
01632	N	Anesth, surgery of shoulder					
01634	N	Anesth, shoulder joint amput					
01636	N	Anesth, forequarter amput					
01638	N	Anesth, shoulder replacement					
01650	N	Anesth, shoulder artery surg					
01652	N	Anesth, shoulder vessel surg					
01654	N	Anesth, shoulder vessel surg					
01656	N	Anesth, arm-leg vessel surg					
01670	N	Anesth, shoulder vein surg					
01680	N	Anesth, shoulder casting					
01682	N	Anesth, airplane cast					

CPT codes and descriptions only are copyright American Medical Association. All Rights Reserved. Applicable FARS/DFARS Apply.
Copyright American Dental Association. All rights reserved.
*Code is new in 2001.

ADDENDUM B.—HOSPITAL OUTPATIENT DEPARTMENT (HOPD) PAYMENT STATUS BY HCPCS CODE AND RELATED INFORMATION—Continued

CPT/ HCPCS	HOPD Status Indicator	Description	APC	Relative Weight	Payment Rate	National Unadjusted Coinsurance	Minimum Unadjusted Coinsurance
01700	N	Anesth, elbow area skin surg					
01710	N	Anesth, elbow area surgery					
01712	N	Anesth, uppr arm tendon surg					
01714	N	Anesth, uppr arm tendon surg					
01716	N	Anesth, biceps tendon repair					
01730	N	Anesth, uppr arm procedure					
01732	N	Anesth, elbow arthroscopy					
01740	N	Anesth, upper arm surgery					
01742	N	Anesth, humerus surgery					
01744	N	Anesth, humerus repair					
01756	N	Anesth, radical humerus surg					
01758	N	Anesth, humeral lesion surg					
01760	N	Anesth, elbow replacement					
01770	N	Anesth, uppr arm artery surg					
01772	N	Anesth, uppr arm embolectomy					
01780	N	Anesth, upper arm vein surg					
01782	N	Anesth, uppr arm vein repair					
01784D	N	Anesth, av fistula repair					
01800	N	Anesth, lower arm skin surg					
01810	N	Anesth, lower arm surgery					
01820	N	Anesth, lower arm procedure					
01830	N	Anesth, lower arm surgery					
01832	N	Anesth, wrist replacement					
01840	N	Anesth, lwr arm artery surg					
01842	N	Anesth, lwr arm embolectomy					
01844	N	Anesth, vascular shunt surg					
01850	N	Anesth, lower arm vein surg					
01852	N	Anesth, lwr arm vein repair					
01860	N	Anesth, lower arm casting					
01900	N	Anesth, uterus/tube inject					
01902	N	Anesth, burr holes, skull					
01904	N	Anesth, skull x-ray inject					
01906	N	Anesth, lumbar myelography					
01908	N	Anesth, cervical myelography					
01910	N	Anesth, skull myelography					
01912	N	Anesth, lumbar diskography					
01914	N	Anesth, cervical diskography					
01916	N	Anesth, head arteriogram					
01918	N	Anesth, limb arteriogram					
01920	N	Anesth, catheterize heart					
01921	N	Anesth, vessel surgery					
01922	N	Anesth, cat or MRI scan					
*01951	N	Anesth, burn, less 1 percent					
*01952	N	Anesth, burn, 1-9 percent					
*01953	N	Anesth, burn, each 9 percent					
01990	N	Support for organ donor					
01995	N	Regional anesthesia, limb					
01996	N	Manage daily drug therapy					
01999	N	Unlisted anesth procedure					
10040	T	Acne surgery of skin abscess	0006	2.00	$99.19	$33.95	$19.84
10060	T	Drainage of skin abscess	0006	2.00	$99.19	$33.95	$19.84
10061	T	Drainage of skin abscess	0006	2.00	$99.19	$33.95	$19.84
10080	T	Drainage of pilonidal cyst	0006	2.00	$99.19	$33.95	$19.84
10081	T	Drainage of pilonidal cyst	0007	3.68	$182.51	$72.03	$36.50
10120	T	Remove foreign body	0006	2.00	$99.19	$33.95	$19.84
10121	T	Remove foreign body	0020	6.51	$322.87	$130.53	$64.57
10140	T	Drainage of hematoma/fluid	0007	3.68	$182.51	$72.03	$36.50
10160	T	Puncture drainage of lesion	0006	2.00	$99.19	$33.95	$19.84
10180	T	Complex drainage, wound	0007	3.68	$182.51	$72.03	$36.50
11000	T	Debride infected skin	0015	1.77	$87.78	$31.20	$17.56
11001	T	Debride infected skin add-on	0015	1.77	$87.78	$31.20	$17.56
11010	T	Debride skin, fx	0022	12.49	$619.45	$292.94	$123.89
11011	T	Debride skin/muscle, fx	0022	12.49	$619.45	$292.94	$123.89
11012	T	Debride skin/muscle/bone, fx	0022	12.49	$619.45	$292.94	$123.89
11040	T	Debride skin, partial	0015	1.77	$87.78	$31.20	$17.56
11041	T	Debride skin, full	0015	1.77	$87.78	$31.20	$17.56
11042	T	Debride skin/tissue	0016	3.53	$175.07	$74.67	$35.01
11043	T	Debride tissue/muscle	0016	3.53	$175.07	$74.67	$35.01
11044	T	Debride tissue/muscle/bone	0017	12.45	$617.47	$289.16	$123.49
11055	T	Trim skin lesion	0015	1.77	$87.78	$31.20	$17.56
11056	T	Trim skin lesions, 2 to 4	0015	1.77	$87.78	$31.20	$17.56
11057	T	Trim skin lesions, over 4	0015	1.77	$87.78	$31.20	$17.56
11100	T	Biopsy of skin lesion	0018	0.94	$46.62	$17.66	$9.32
11101	T	Biopsy, skin add-on	0018	0.94	$46.62	$17.66	$9.32

CPT codes and descriptions only are copyright American Medical Association. All Rights Reserved. Applicable FARS/DFARS Apply.
Copyright American Dental Association. All rights reserved.
*Code is new in 2001.

ADDENDUM B.—HOSPITAL OUTPATIENT DEPARTMENT (HOPD) PAYMENT STATUS BY HCPCS CODE AND RELATED INFORMATION—Continued

CPT/ HCPCS	HOPD Status Indicator	Description	APC	Relative Weight	Payment Rate	National Unadjusted Coinsurance	Minimum Unadjusted Coinsurance
11200	T	Removal of skin tags	0015	1.77	$87.78	$31.20	$17.56
11201	T	Remove skin tags add-on	0015	1.77	$87.78	$31.20	$17.56
11300	T	Shave skin lesion	0013	0.91	$45.13	$17.66	$9.03
11301	T	Shave skin lesion	0013	0.91	$45.13	$17.66	$9.03
11302	T	Shave skin lesion	0014	1.50	$74.39	$24.55	$14.88
11303	T	Shave skin lesion	0015	1.77	$87.78	$31.20	$17.56
11305	T	Shave skin lesion	0013	0.91	$45.13	$17.66	$9.03
11306	T	Shave skin lesion	0013	0.91	$45.13	$17.66	$9.03
11307	T	Shave skin lesion	0014	1.50	$74.39	$24.55	$14.88
11308	T	Shave skin lesion	0015	1.77	$87.78	$31.20	$17.56
11310	T	Shave skin lesion	0013	0.91	$45.13	$17.66	$9.03
11311	T	Shave skin lesion	0013	0.91	$45.13	$17.66	$9.03
11312	T	Shave skin lesion	0015	1.77	$87.78	$31.20	$17.56
11313	T	Shave skin lesion	0016	3.53	$175.07	$74.67	$35.01
11400	T	Removal of skin lesion	0019	4.00	$198.39	$78.91	$39.68
11401	T	Removal of skin lesion	0019	4.00	$198.39	$78.91	$39.68
11402	T	Removal of skin lesion	0019	4.00	$198.39	$78.91	$39.68
11403	T	Removal of skin lesion	0020	6.51	$322.87	$130.53	$64.57
11404	T	Removal of skin lesion	0020	6.51	$322.87	$130.53	$64.57
11406	T	Removal of skin lesion	0020	6.51	$322.87	$130.53	$64.57
11420	T	Removal of skin lesion	0019	4.00	$198.39	$78.91	$39.68
11421	T	Removal of skin lesion	0019	4.00	$198.39	$78.91	$39.68
11422	T	Removal of skin lesion	0019	4.00	$198.39	$78.91	$39.68
11423	T	Removal of skin lesion	0020	6.51	$322.87	$130.53	$64.57
11424	T	Removal of skin lesion	0020	6.51	$322.87	$130.53	$64.57
11426	T	Removal of skin lesion	0022	12.49	$619.45	$292.94	$123.89
11440	T	Removal of skin lesion	0019	4.00	$198.39	$78.91	$39.68
11441	T	Removal of skin lesion	0019	4.00	$198.39	$78.91	$39.68
11442	T	Removal of skin lesion	0019	4.00	$198.39	$78.91	$39.68
11443	T	Removal of skin lesion	0020	6.51	$322.87	$130.53	$64.57
11444	T	Removal of skin lesion	0020	6.51	$322.87	$130.53	$64.57
11446	T	Removal of skin lesion	0022	12.49	$619.45	$292.94	$123.89
11450	T	Removal, sweat gland lesion	0022	12.49	$619.45	$292.94	$123.89
11451	T	Removal, sweat gland lesion	0022	12.49	$619.45	$292.94	$123.89
11462	T	Removal, sweat gland lesion	0022	12.49	$619.45	$292.94	$123.89
11463	T	Removal, sweat gland lesion	0022	12.49	$619.45	$292.94	$123.89
11470	T	Removal, sweat gland lesion	0022	12.49	$619.45	$292.94	$123.89
11471	T	Removal, sweat gland lesion	0022	12.49	$619.45	$292.94	$123.89
11600	T	Removal of skin lesion	0019	4.00	$198.39	$78.91	$39.68
11601	T	Removal of skin lesion	0019	4.00	$198.39	$78.91	$39.68
11602	T	Removal of skin lesion	0019	4.00	$198.39	$78.91	$39.68
11603	T	Removal of skin lesion	0020	6.51	$322.87	$130.53	$64.57
11604	T	Removal of skin lesion	0020	6.51	$322.87	$130.53	$64.57
11606	T	Removal of skin lesion	0021	10.49	$520.26	$236.51	$104.05
11620	T	Removal of skin lesion	0019	4.00	$198.39	$78.91	$39.68
11621	T	Removal of skin lesion	0019	4.00	$198.39	$78.91	$39.68
11622	T	Removal of skin lesion	0019	4.00	$198.39	$78.91	$39.68
11623	T	Removal of skin lesion	0020	6.51	$322.87	$130.53	$64.57
11624	T	Removal of skin lesion	0020	6.51	$322.87	$130.53	$64.57
11626	T	Removal of skin lesion	0022	12.49	$619.45	$292.94	$123.89
11640	T	Removal of skin lesion	0019	4.00	$198.39	$78.91	$39.68
11641	T	Removal of skin lesion	0019	4.00	$198.39	$78.91	$39.68
11642	T	Removal of skin lesion	0019	4.00	$198.39	$78.91	$39.68
11643	T	Removal of skin lesion	0020	6.51	$322.87	$130.53	$64.57
11644	T	Removal of skin lesion	0020	6.51	$322.87	$130.53	$64.57
11646	T	Removal of skin lesion	0022	12.49	$619.45	$292.94	$123.89
11719	T	Trim nail(s)	0009	0.74	$36.70	$9.63	$7.34
11720	T	Debride nail, 1-5	0009	0.74	$36.70	$9.63	$7.34
11721	T	Debride nail, 6 or more	0009	0.74	$36.70	$9.63	$7.34
11730	T	Removal of nail plate	0013	0.91	$45.13	$17.66	$9.03
11732	T	Remove nail plate, add-on	0012	0.53	$26.29	$9.18	$5.26
11740	T	Drain blood from under nail	0009	0.74	$36.70	$9.63	$7.34
11750	T	Removal of nail bed	0019	4.00	$198.39	$78.91	$39.68
11752	T	Remove nail bed/finger tip	0022	12.49	$619.45	$292.94	$123.89
11755	T	Biopsy, nail unit	0019	4.00	$198.39	$78.91	$39.68
11760	T	Repair of nail bed	0024	2.43	$120.51	$44.50	$24.10
11762	T	Reconstruction of nail bed	0024	2.43	$120.51	$44.50	$24.10
11765	T	Excision of nail fold, toe	0015	1.77	$87.78	$31.20	$17.56
11770	T	Removal of pilonidal lesion	0021	10.49	$520.26	$236.51	$104.05
11771	T	Removal of pilonidal lesion	0022	12.49	$619.45	$292.94	$123.89
11772	T	Removal of pilonidal lesion	0022	12.49	$619.45	$292.94	$123.89
11900	T	Injection into skin lesions	0012	0.53	$26.29	$9.18	$5.26
11901	T	Added skin lesions injection	0013	0.91	$45.13	$17.66	$9.03
11920	T	Correct skin color defects	0024	2.43	$120.51	$44.50	$24.10

CPT codes and descriptions only are copyright American Medical Association. All Rights Reserved. Applicable FARS/DFARS Apply.
Copyright American Dental Association. All rights reserved.
*Code is new in 2001.

ADDENDUM B.—HOSPITAL OUTPATIENT DEPARTMENT (HOPD) PAYMENT STATUS BY HCPCS CODE AND RELATED INFORMATION—Continued

CPT/ HCPCS	HOPD Status Indicator	Description	APC	Relative Weight	Payment Rate	National Unadjusted Coinsurance	Minimum Unadjusted Coinsurance
11921	T	Correct skin color defects	0024	2.43	$120.51	$44.50	$24.10
11922	T	Correct skin color defects	0024	2.43	$120.51	$44.50	$24.10
11950	T	Therapy for contour defects	0024	2.43	$120.51	$44.50	$24.10
11951	T	Therapy for contour defects	0024	2.43	$120.51	$44.50	$24.10
11952	T	Therapy for contour defects	0024	2.43	$120.51	$44.50	$24.10
11954	T	Therapy for contour defects	0024	2.43	$120.51	$44.50	$24.10
11960	T	Insert tissue expander(s)	0026	12.11	$600.61	$277.92	$120.12
11970	T	Replace tissue expander	0026	12.11	$600.61	$277.92	$120.12
11971	T	Remove tissue expander(s)	0022	12.49	$619.45	$292.94	$123.89
11975	E	Insert contraceptive cap					
11976	T	Removal of contraceptive cap	0019	4.00	$198.39	$78.91	$39.68
11977	E	Removal/reinsert contra cap					
11980	X	Implant hormone pellet(s)	0340	1.04	$51.58	$12.85	$10.32
12001	T	Repair superficial wound(s)	0024	2.43	$120.51	$44.50	$24.10
12002	T	Repair superficial wound(s)	0024	2.43	$120.51	$44.50	$24.10
12004	T	Repair superficial wound(s)	0024	2.43	$120.51	$44.50	$24.10
12005	T	Repair superficial wound(s)	0024	2.43	$120.51	$44.50	$24.10
12006	T	Repair superficial wound(s)	0024	2.43	$120.51	$44.50	$24.10
12007	T	Repair superficial wound(s)	0024	2.43	$120.51	$44.50	$24.10
12011	T	Repair superficial wound(s)	0024	2.43	$120.51	$44.50	$24.10
12013	T	Repair superficial wound(s)	0024	2.43	$120.51	$44.50	$24.10
12014	T	Repair superficial wound(s)	0024	2.43	$120.51	$44.50	$24.10
12015	T	Repair superficial wound(s)	0024	2.43	$120.51	$44.50	$24.10
12016	T	Repair superficial wound(s)	0024	2.43	$120.51	$44.50	$24.10
12017	T	Repair superficial wound(s)	0024	2.43	$120.51	$44.50	$24.10
12018	T	Repair superficial wound(s)	0024	2.43	$120.51	$44.50	$24.10
12020	T	Closure of split wound	0024	2.43	$120.51	$44.50	$24.10
12021	T	Closure of split wound	0024	2.43	$120.51	$44.50	$24.10
12031	T	Layer closure of wound(s)	0024	2.43	$120.51	$44.50	$24.10
12032	T	Layer closure of wound(s)	0024	2.43	$120.51	$44.50	$24.10
12034	T	Layer closure of wound(s)	0024	2.43	$120.51	$44.50	$24.10
12035	T	Layer closure of wound(s)	0024	2.43	$120.51	$44.50	$24.10
12036	T	Layer closure of wound(s)	0024	2.43	$120.51	$44.50	$24.10
12037	T	Layer closure of wound(s)	0026	12.11	$600.61	$277.92	$120.12
12041	T	Layer closure of wound(s)	0024	2.43	$120.51	$44.50	$24.10
12042	T	Layer closure of wound(s)	0024	2.43	$120.51	$44.50	$24.10
12044	T	Layer closure of wound(s)	0024	2.43	$120.51	$44.50	$24.10
12045	T	Layer closure of wound(s)	0024	2.43	$120.51	$44.50	$24.10
12046	T	Layer closure of wound(s)	0024	2.43	$120.51	$44.50	$24.10
12047	T	Layer closure of wound(s)	0026	12.11	$600.61	$277.92	$120.12
12051	T	Layer closure of wound(s)	0024	2.43	$120.51	$44.50	$24.10
12052	T	Layer closure of wound(s)	0024	2.43	$120.51	$44.50	$24.10
12053	T	Layer closure of wound(s)	0024	2.43	$120.51	$44.50	$24.10
12054	T	Layer closure of wound(s)	0024	2.43	$120.51	$44.50	$24.10
12055	T	Layer closure of wound(s)	0024	2.43	$120.51	$44.50	$24.10
12056	T	Layer closure of wound(s)	0024	2.43	$120.51	$44.50	$24.10
12057	T	Layer closure of wound(s)	0026	12.11	$600.61	$277.92	$120.12
13100	T	Repair of wound or lesion	0025	3.74	$185.49	$70.66	$37.10
13101	T	Repair of wound or lesion	0025	3.74	$185.49	$70.66	$37.10
13102	T	Repair wound/lesion add-on	0025	3.74	$185.49	$70.66	$37.10
13120	T	Repair of wound or lesion	0025	3.74	$185.49	$70.66	$37.10
13121	T	Repair of wound or lesion	0025	3.74	$185.49	$70.66	$37.10
13122	T	Repair wound/lesion add-on	0025	3.74	$185.49	$70.66	$37.10
13131	T	Repair of wound or lesion	0025	3.74	$185.49	$70.66	$37.10
13132	T	Repair of wound or lesion	0025	3.74	$185.49	$70.66	$37.10
13133	T	Repair wound/lesion add-on	0025	3.74	$185.49	$70.66	$37.10
13150	T	Repair of wound or lesion	0026	12.11	$600.61	$277.92	$120.12
13151	T	Repair of wound or lesion	0025	3.74	$185.49	$70.66	$37.10
13152	T	Repair of wound or lesion	0025	3.74	$185.49	$70.66	$37.10
13153	T	Repair wound/lesion add-on	0025	3.74	$185.49	$70.66	$37.10
13160	T	Late closure of wound	0026	12.11	$600.61	$277.92	$120.12
14000	T	Skin tissue rearrangement	0026	12.11	$600.61	$277.92	$120.12
14001	T	Skin tissue rearrangement	0026	12.11	$600.61	$277.92	$120.12
14020	T	Skin tissue rearrangement	0026	12.11	$600.61	$277.92	$120.12
14021	T	Skin tissue rearrangement	0026	12.11	$600.61	$277.92	$120.12
14040	T	Skin tissue rearrangement	0026	12.11	$600.61	$277.92	$120.12
14041	T	Skin tissue rearrangement	0026	12.11	$600.61	$277.92	$120.12
14060	T	Skin tissue rearrangement	0026	12.11	$600.61	$277.92	$120.12
14061	T	Skin tissue rearrangement	0026	12.11	$600.61	$277.92	$120.12
14300	T	Skin tissue rearrangement	0026	12.11	$600.61	$277.92	$120.12
14350	T	Skin tissue rearrangement	0026	12.11	$600.61	$277.92	$120.12
15000	T	Skin graft	0026	12.11	$600.61	$277.92	$120.12
15001	T	Skin graft add-on	0026	12.11	$600.61	$277.92	$120.12
15050	T	Skin pinch graft	0026	12.11	$600.61	$277.92	$120.12

CPT codes and descriptions only are copyright American Medical Association. All Rights Reserved. Applicable FARS/DFARS Apply.
Copyright American Dental Association. All rights reserved.
*Code is new in 2001.

ADDENDUM B.—HOSPITAL OUTPATIENT DEPARTMENT (HOPD) PAYMENT STATUS BY HCPCS CODE AND RELATED INFORMATION—Continued

CPT/ HCPCS	HOPD Status Indicator	Description	APC	Relative Weight	Payment Rate	National Unadjusted Coinsurance	Minimum Unadjusted Coinsurance
15100	T	Skin split graft	0026	12.11	$600.61	$277.92	$120.12
15101	T	Skin split graft add-on	0026	12.11	$600.61	$277.92	$120.12
15120	T	Skin split graft	0026	12.11	$600.61	$277.92	$120.12
15121	T	Skin split graft add-on	0026	12.11	$600.61	$277.92	$120.12
15200	T	Skin full graft	0026	12.11	$600.61	$277.92	$120.12
15201	T	Skin full graft add-on	0026	12.11	$600.61	$277.92	$120.12
15220	T	Skin full graft	0026	12.11	$600.61	$277.92	$120.12
15221	T	Skin full graft add-on	0026	12.11	$600.61	$277.92	$120.12
15240	T	Skin full graft	0026	12.11	$600.61	$277.92	$120.12
15241	T	Skin full graft add-on	0026	12.11	$600.61	$277.92	$120.12
15260	T	Skin full graft	0026	12.11	$600.61	$277.92	$120.12
15261	T	Skin full graft add-on	0026	12.11	$600.61	$277.92	$120.12
*15342	T	Cultured skin graft, 25 cm	0025	3.74	$185.49	$70.66	$37.10
*15343	T	Culture skin graft addl 25 cm	0025	3.74	$185.49	$70.66	$37.10
15350	T	Skin homograft	0026	12.11	$600.61	$277.92	$120.12
15351	T	Skin homograft add-on	0026	12.11	$600.61	$277.92	$120.12
15400	T	Skin heterograft	0026	12.11	$600.61	$277.92	$120.12
15401	T	Skin heterograft add-on	0026	12.11	$600.61	$277.92	$120.12
15570	T	Form skin pedicle flap	0026	12.11	$600.61	$277.92	$120.12
15572	T	Form skin pedicle flap	0026	12.11	$600.61	$277.92	$120.12
15574	T	Form skin pedicle flap	0026	12.11	$600.61	$277.92	$120.12
15576	T	Form skin pedicle flap	0026	12.11	$600.61	$277.92	$120.12
15600	T	Skin graft	0026	12.11	$600.61	$277.92	$120.12
15610	T	Skin graft	0026	12.11	$600.61	$277.92	$120.12
15620	T	Skin graft	0026	12.11	$600.61	$277.92	$120.12
15630	T	Skin graft	0026	12.11	$600.61	$277.92	$120.12
15650	T	Transfer skin pedicle flap	0026	12.11	$600.61	$277.92	$120.12
15732	T	Muscle-skin graft, head/neck	0027	15.80	$783.62	$383.10	$156.72
15734	T	Muscle-skin graft, trunk	0027	15.80	$783.62	$383.10	$156.72
15736	T	Muscle-skin graft, arm	0027	15.80	$783.62	$383.10	$156.72
15738	T	Muscle-skin graft, leg	0027	15.80	$783.62	$383.10	$156.72
15740	T	Island pedicle flap graft	0027	15.80	$783.62	$383.10	$156.72
15750	T	Neurovascular pedicle graft	0027	15.80	$783.62	$383.10	$156.72
15756	C	Free muscle flap, microvasc					
15757	C	Free skin flap, microvasc					
15758	C	Free fascial flap, microvasc					
15760	T	Composite skin graft	0027	15.80	$783.62	$383.10	$156.72
15770	T	Derma-fat-fascia graft	0027	15.80	$783.62	$383.10	$156.72
15775	T	Hair transplant punch grafts	0026	12.11	$600.61	$277.92	$120.12
15776	T	Hair transplant punch grafts	0026	12.11	$600.61	$277.92	$120.12
15780	T	Abrasion treatment of skin	0022	12.49	$619.45	$292.94	$123.89
15781	T	Abrasion treatment of skin	0022	12.49	$619.45	$292.94	$123.89
15782	T	Abrasion treatment of skin	0022	12.49	$619.45	$292.94	$123.89
15783	T	Abrasion treatment of skin	0015	1.77	$87.78	$31.20	$17.56
15786	T	Abrasion, lesion, single	0013	0.91	$45.13	$17.66	$9.03
15787	T	Abrasion, lesions, add-on	0016	3.53	$175.07	$74.67	$35.01
15788	T	Chemical peel, face, epiderm	0013	0.91	$45.13	$17.66	$9.03
15789	T	Chemical peel, face, dermal	0015	1.77	$87.78	$31.20	$17.56
15792	T	Chemical peel, nonfacial	0016	3.53	$175.07	$74.67	$35.01
15793	T	Chemical peel, nonfacial	0016	3.53	$175.07	$74.67	$35.01
15810	T	Salabrasion	0016	3.53	$175.07	$74.67	$35.01
15811	T	Salabrasion	0022	12.49	$619.45	$292.94	$123.89
15819	T	Plastic surgery, neck	0026	12.11	$600.61	$277.92	$120.12
15820	T	Revision of lower eyelid	0026	12.11	$600.61	$277.92	$120.12
15821	T	Revision of lower eyelid	0026	12.11	$600.61	$277.92	$120.12
15822	T	Revision of upper eyelid	0026	12.11	$600.61	$277.92	$120.12
15823	T	Revision of upper eyelid	0026	12.11	$600.61	$277.92	$120.12
15824	T	Removal of forehead wrinkles	0027	15.80	$783.62	$383.10	$156.72
15825	T	Removal of neck wrinkles	0026	12.11	$600.61	$277.92	$120.12
15826	T	Removal of brow wrinkles	0027	15.80	$783.62	$383.10	$156.72
15828	T	Removal of face wrinkles	0027	15.80	$783.62	$383.10	$156.72
15829	T	Removal of skin wrinkles	0026	12.11	$600.61	$277.92	$120.12
15831	T	Excise excessive skin tissue	0027	15.80	$783.62	$383.10	$156.72
15832	T	Excise excessive skin tissue	0027	15.80	$783.62	$383.10	$156.72
15833	T	Excise excessive skin tissue	0027	15.80	$783.62	$383.10	$156.72
15834	T	Excise excessive skin tissue	0027	15.80	$783.62	$383.10	$156.72
15835	T	Excise excessive skin tissue	0026	12.11	$600.61	$277.92	$120.12
15836	T	Excise excessive skin tissue	0027	15.80	$783.62	$383.10	$156.72
15837	T	Excise excessive skin tissue	0027	15.80	$783.62	$383.10	$156.72
15838	T	Excise excessive skin tissue	0022	12.49	$619.45	$292.94	$123.89
15839	T	Excise excessive skin tissue	0027	15.80	$783.62	$383.10	$156.72
15840	T	Graft for face nerve palsy	0027	15.80	$783.62	$383.10	$156.72
15841	T	Graft for face nerve palsy	0027	15.80	$783.62	$383.10	$156.72
15842	T	Graft for face nerve palsy	0027	15.80	$783.62	$383.10	$156.72

CPT codes and descriptions only are copyright American Medical Association. All Rights Reserved. Applicable FARS/DFARS Apply.
Copyright American Dental Association. All rights reserved.
*Code is new in 2001.

ADDENDUM B.—HOSPITAL OUTPATIENT DEPARTMENT (HOPD) PAYMENT STATUS BY HCPCS CODE AND RELATED INFORMATION—Continued

CPT/ HCPCS	HOPD Status Indicator	Description	APC	Relative Weight	Payment Rate	National Unadjusted Coinsurance	Minimum Unadjusted Coinsurance
15845	T	Skin and muscle repair, face	0027	15.80	$783.62	$383.10	$156.72
15850	T	Removal of sutures	0013	0.91	$45.13	$17.66	$9.03
15851	T	Removal of sutures	0013	0.91	$45.13	$17.66	$9.03
15852	T	Dressing change,not for burn	0012	0.53	$26.29	$9.18	$5.26
15860	N	Test for blood flow in graft					
15876	T	Suction assisted lipectomy	0027	15.80	$783.62	$383.10	$156.72
15877	T	Suction assisted lipectomy	0027	15.80	$783.62	$383.10	$156.72
15878	T	Suction assisted lipectomy	0027	15.80	$783.62	$383.10	$156.72
15879	T	Suction assisted lipectomy	0027	15.80	$783.62	$383.10	$156.72
15920	T	Removal of tail bone ulcer	0022	12.49	$619.45	$292.94	$123.89
15922	T	Removal of tail bone ulcer	0027	15.80	$783.62	$383.10	$156.72
15931	T	Remove sacrum pressure sore	0022	12.49	$619.45	$292.94	$123.89
15933	T	Remove sacrum pressure sore	0022	12.49	$619.45	$292.94	$123.89
15934	T	Remove sacrum pressure sore	0027	15.80	$783.62	$383.10	$156.72
15935	T	Remove sacrum pressure sore	0027	15.80	$783.62	$383.10	$156.72
15936	T	Remove sacrum pressure sore	0027	15.80	$783.62	$383.10	$156.72
15937	T	Remove sacrum pressure sore	0027	15.80	$783.62	$383.10	$156.72
15940	T	Remove hip pressure sore	0022	12.49	$619.45	$292.94	$123.89
15941	T	Remove hip pressure sore	0022	12.49	$619.45	$292.94	$123.89
15944	T	Remove hip pressure sore	0027	15.80	$783.62	$383.10	$156.72
15945	T	Remove hip pressure sore	0027	15.80	$783.62	$383.10	$156.72
15946	T	Remove hip pressure sore	0027	15.80	$783.62	$383.10	$156.72
15950	T	Remove thigh pressure sore	0022	12.49	$619.45	$292.94	$123.89
15951	T	Remove thigh pressure sore	0022	12.49	$619.45	$292.94	$123.89
15952	T	Remove thigh pressure sore	0027	15.80	$783.62	$383.10	$156.72
15953	T	Remove thigh pressure sore	0027	15.80	$783.62	$383.10	$156.72
15956	T	Remove thigh pressure sore	0027	15.80	$783.62	$383.10	$156.72
15958	T	Remove thigh pressure sore	0027	15.80	$783.62	$383.10	$156.72
15999	T	Removal of pressure sore	0022	12.49	$619.45	$292.94	$123.89
16000	T	Initial treatment of burn(s)	0015	1.77	$87.78	$31.20	$17.56
16010	T	Treatment of burn(s)	0015	1.77	$87.78	$31.20	$17.56
16015	T	Treatment of burn(s)	0017	12.45	$617.47	$289.16	$123.49
16020	T	Treatment of burn(s)	0015	1.77	$87.78	$31.20	$17.56
16025	T	Treatment of burn(s)	0014	1.50	$74.39	$24.55	$14.88
16030	T	Treatment of burn(s)	0015	1.77	$87.78	$31.20	$17.56
16035	C	Incision of burn scab, initl					
*16036	C	Incise burn scab, addl incis					
17000	T	Destroy benign/premal lesion	0010	0.55	$27.28	$9.86	$5.46
17003	T	Destroy lesions, 2-14	0010	0.55	$27.28	$9.86	$5.46
17004	T	Destroy lesions, 15 or more	0011	2.72	$134.90	$50.01	$26.98
17106	T	Destruction of skin lesions	0011	2.72	$134.90	$50.01	$26.98
17107	T	Destruction of skin lesions	0011	2.72	$134.90	$50.01	$26.98
17108	T	Destruction of skin lesions	0011	2.72	$134.90	$50.01	$26.98
17110	T	Destruct lesion, 1-14	0010	0.55	$27.28	$9.86	$5.46
17111	T	Destruct lesion, 15 or more	0011	2.72	$134.90	$50.01	$26.98
17250	T	Chemical cautery, tissue	0014	1.50	$74.39	$24.55	$14.88
17260	T	Destruction of skin lesions	0013	0.91	$45.13	$17.66	$9.03
17261	T	Destruction of skin lesions	0013	0.91	$45.13	$17.66	$9.03
17262	T	Destruction of skin lesions	0013	0.91	$45.13	$17.66	$9.03
17263	T	Destruction of skin lesions	0013	0.91	$45.13	$17.66	$9.03
17264	T	Destruction of skin lesions	0015	1.77	$87.78	$31.20	$17.56
17266	T	Destruction of skin lesions	0016	3.53	$175.07	$74.67	$35.01
17270	T	Destruction of skin lesions	0015	1.77	$87.78	$31.20	$17.56
17271	T	Destruction of skin lesions	0013	0.91	$45.13	$17.66	$9.03
17272	T	Destruction of skin lesions	0013	0.91	$45.13	$17.66	$9.03
17273	T	Destruction of skin lesions	0015	1.77	$87.78	$31.20	$17.56
17274	T	Destruction of skin lesions	0015	1.77	$87.78	$31.20	$17.56
17276	T	Destruction of skin lesions	0015	1.77	$87.78	$31.20	$17.56
17280	T	Destruction of skin lesions	0015	1.77	$87.78	$31.20	$17.56
17281	T	Destruction of skin lesions	0015	1.77	$87.78	$31.20	$17.56
17282	T	Destruction of skin lesions	0015	1.77	$87.78	$31.20	$17.56
17283	T	Destruction of skin lesions	0015	1.77	$87.78	$31.20	$17.56
17284	T	Destruction of skin lesions	0016	3.53	$175.07	$74.67	$35.01
17286	T	Destruction of skin lesions	0016	3.53	$175.07	$74.67	$35.01
17304	T	Chemosurgery of skin lesion	0020	6.51	$322.87	$130.53	$64.57
17305	T	2nd stage chemosurgery	0020	6.51	$322.87	$130.53	$64.57
17306	T	3rd stage chemosurgery	0020	6.51	$322.87	$130.53	$64.57
17307	T	Followup skin lesion therapy	0020	6.51	$322.87	$130.53	$64.57
17310	T	Extensive skin chemosurgery	0020	6.51	$322.87	$130.53	$64.57
17340	T	Cryotherapy of skin	0012	0.53	$26.29	$9.18	$5.26
17360	T	Skin peel therapy	0016	3.53	$175.07	$74.67	$35.01
17380	T	Hair removal by electrolysis	0016	3.53	$175.07	$74.67	$35.01
17999	T	Skin tissue procedure	0004	1.84	$91.26	$32.57	$18.25
19000	T	Drainage of breast lesion	0004	1.84	$91.26	$32.57	$18.25

CPT codes and descriptions only are copyright American Medical Association. All Rights Reserved. Applicable FARS/DFARS Apply.
Copyright American Dental Association. All rights reserved.
*Code is new in 2001.

ADDENDUM B.—HOSPITAL OUTPATIENT DEPARTMENT (HOPD) PAYMENT STATUS BY HCPCS CODE AND RELATED INFORMATION—Continued

CPT/ HCPCS	HOPD Status Indicator	Description	APC	Relative Weight	Payment Rate	National Unadjusted Coinsurance	Minimum Unadjusted Coinsurance
19001	T	Drain breast lesion add-on	0004	1.84	$91.26	$32.57	$18.25
19020	T	Incision of breast lesion	0008	6.15	$305.02	$113.67	$61.00
19030	N	Injection for breast x-ray					
19100	T	Bx breast percut w/o image	0005	5.41	$268.32	$119.75	$53.66
19101	T	Biopsy of breast, open	0028	12.37	$613.52	$303.74	$122.70
*19102	T	Bx breast percut w/ image	0005	5.41	$268.32	$119.75	$53.66
*19103	S	Bx breast percut w/device	0974	8.25	$409.17		$81.83
19110	T	Nipple exploration	0028	12.37	$613.52	$303.74	$122.70
19112	T	Excise breast duct fistula	0028	12.37	$613.52	$303.74	$122.70
19120	T	Removal of breast lesion	0028	12.37	$613.52	$303.74	$122.70
19125	T	Excision, breast lesion	0028	12.37	$613.52	$303.74	$122.70
19126	T	Excision, addl breast lesion	0028	12.37	$613.52	$303.74	$122.70
19140	T	Removal of breast tissue	0028	12.37	$613.52	$303.74	$122.70
19160	T	Removal of breast tissue	0028	12.37	$613.52	$303.74	$122.70
19162	T	Remove breast tissue, nodes	0029	31.39	$1,557.05	$820.79	$311.41
19180	T	Removal of breast	0029	31.39	$1,557.05	$820.79	$311.41
19182	T	Removal of breast	0028	12.37	$613.52	$303.74	$122.70
19200	C	Removal of breast					
19220	C	Removal of breast					
19240	T	Removal of breast	0029	31.39	$1,557.05	$820.79	$311.41
19260	T	Removal of chest wall lesion	0021	10.49	$520.26	$236.51	$104.05
19271	C	Revision of chest wall					
19272	C	Extensive chest wall surgery					
19290	T	Place needle wire, breast	0028	12.37	$613.52	$303.74	$122.70
19291	T	Place needle wire, breast	0028	12.37	$613.52	$303.74	$122.70
*19295	S	Place breast clip, percut	0971	1.55	$76.88		$15.38
19316	T	Suspension of breast	0029	31.39	$1,557.05	$820.79	$311.41
19318	T	Reduction of large breast	0029	31.39	$1,557.05	$820.79	$311.41
19324	T	Enlarge breast	0029	31.39	$1,557.05	$820.79	$311.41
19325	T	Enlarge breast with implant	0030	31.11	$1,543.16	$763.55	$308.63
19328	T	Removal of breast implant	0028	12.37	$613.52	$303.74	$122.70
19330	T	Removal of implant material	0028	12.37	$613.52	$303.74	$122.70
19340	T	Immediate breast prosthesis	0030	31.11	$1,543.16	$763.55	$308.63
19342	T	Delayed breast prosthesis	0030	31.11	$1,543.16	$763.55	$308.63
19350	T	Breast reconstruction	0028	12.37	$613.52	$303.74	$122.70
19355	T	Correct inverted nipple(s)	0028	12.37	$613.52	$303.74	$122.70
19357	T	Breast reconstruction	0030	31.11	$1,543.16	$763.55	$308.63
19361	C	Breast reconstruction					
19364	C	Breast reconstruction					
19366	T	Breast reconstruction	0029	31.39	$1,557.05	$820.79	$311.41
19367	C	Breast reconstruction					
19368	C	Breast reconstruction					
19369	C	Breast reconstruction					
19370	T	Surgery of breast capsule	0028	12.37	$613.52	$303.74	$122.70
19371	T	Removal of breast capsule	0029	31.39	$1,557.05	$820.79	$311.41
19380	T	Revise breast reconstruction	0029	31.39	$1,557.05	$820.79	$311.41
19396	T	Design custom breast implant	0028	12.37	$613.52	$303.74	$122.70
19499	T	Breast surgery procedure	0004	1.84	$91.26	$32.57	$18.25
20000	T	Incision of abscess	0006	2.00	$99.19	$33.95	$19.84
20005	T	Incision of deep abscess	0049	15.04	$745.93	$356.95	$149.19
20100	T	Explore wound, neck	0023	1.98	$98.20	$40.37	$19.64
20101	T	Explore wound, chest	0026	12.11	$600.61	$277.92	$120.12
20102	T	Explore wound, abdomen	0026	12.11	$600.61	$277.92	$120.12
20103	T	Explore wound, extremity	0023	1.98	$98.20	$40.37	$19.64
20150	T	Excise epiphyseal bar	0051	27.76	$1,376.79	$675.24	$275.36
20200	T	Muscle biopsy	0020	6.51	$322.87	$130.53	$64.57
20205	T	Deep muscle biopsy	0021	10.49	$520.26	$236.51	$104.05
20206	T	Needle biopsy, muscle	0005	5.41	$268.32	$119.75	$53.66
20220	T	Bone biopsy, trocar/needle	0019	4.00	$198.39	$78.91	$39.68
20225	T	Bone biopsy, trocar/needle	0020	6.51	$322.87	$130.53	$64.57
20240	T	Bone biopsy, excisional	0022	12.49	$619.45	$292.94	$123.89
20245	T	Bone biopsy, excisional	0022	12.49	$619.45	$292.94	$123.89
20250	T	Open bone biopsy	0049	15.04	$745.93	$356.95	$149.19
20251	T	Open bone biopsy	0049	15.04	$745.93	$356.95	$149.19
20500	T	Injection of sinus tract	0252	5.18	$256.90	$114.24	$51.38
20501	N	Inject sinus tract for x-ray					
20520	T	Removal of foreign body	0019	4.00	$198.39	$78.91	$39.68
20525	T	Removal of foreign body	0022	12.49	$619.45	$292.94	$123.89
20550	T	Inject tendon/ligament/cyst	0040	2.11	$104.65	$40.60	$20.93
20600	T	Drain/inject, joint/bursa	0040	2.11	$104.65	$40.60	$20.93
20605	T	Drain/inject, joint/bursa	0040	2.11	$104.65	$40.60	$20.93
20610	T	Drain/inject, joint/bursa	0040	2.11	$104.65	$40.60	$20.93
20615	T	Treatment of bone cyst	0004	1.84	$91.26	$32.57	$18.25
20650	T	Insert and remove bone pin	0049	15.04	$745.93	$356.95	$149.19

CPT codes and descriptions only are copyright American Medical Association. All Rights Reserved. Applicable FARS/DFARS Apply.
Copyright American Dental Association. All rights reserved.
*Code is new in 2001.

ADDENDUM B.—HOSPITAL OUTPATIENT DEPARTMENT (HOPD) PAYMENT STATUS BY HCPCS CODE AND RELATED INFORMATION—Continued

CPT/ HCPCS	HOPD Status Indicator	Description	APC	Relative Weight	Payment Rate	National Unadjusted Coinsurance	Minimum Unadjusted Coinsurance
20660	C	Apply,remove fixation device					
20661	C	Application of head brace					
20662	C	Application of pelvis brace					
20663	C	Application of thigh brace					
20664	C	Halo brace application					
20665	N	Removal of fixation device					
20670	T	Removal of support implant	0021	10.49	$520.26	$236.51	$104.05
20680	T	Removal of support implant	0022	12.49	$619.45	$292.94	$123.89
20690	T	Apply bone fixation device	0050	21.13	$1,047.96	$513.86	$209.59
20692	T	Apply bone fixation device	0050	21.13	$1,047.96	$513.86	$209.59
20693	T	Adjust bone fixation device	0049	15.04	$745.93	$356.95	$149.19
20694	T	Remove bone fixation device	0049	15.04	$745.93	$356.95	$149.19
20802	C	Replantation, arm, complete					
20805	C	Replant, forearm, complete					
20808	C	Replantation hand, complete					
20816	C	Replantation digit, complete					
20822	C	Replantation digit, complete					
20824	C	Replantation thumb, complete					
20827	C	Replantation thumb, complete					
20838	C	Replantation foot, complete					
20900	T	Removal of bone for graft	0050	21.13	$1,047.96	$513.86	$209.59
20902	T	Removal of bone for graft	0050	21.13	$1,047.96	$513.86	$209.59
20910	T	Remove cartilage for graft	0026	12.11	$600.61	$277.92	$120.12
20912	T	Remove cartilage for graft	0026	12.11	$600.61	$277.92	$120.12
20920	T	Removal of fascia for graft	0026	12.11	$600.61	$277.92	$120.12
20922	T	Removal of fascia for graft	0026	12.11	$600.61	$277.92	$120.12
20924	T	Removal of tendon for graft	0050	21.13	$1,047.96	$513.86	$209.59
20926	T	Removal of tissue for graft	0026	12.11	$600.61	$277.92	$120.12
20930	C	Spinal bone allograft					
20931	C	Spinal bone allograft					
20936	C	Spinal bone autograft					
20937	C	Spinal bone autograft					
20938	C	Spinal bone autograft					
20950	T	Fluid pressure, muscle	0008	6.15	$305.02	$113.67	$61.00
20955	C	Fibula bone graft, microvasc					
20956	C	Iliac bone graft, microvasc					
20957	C	Mt bone graft, microvasc					
20962	C	Other bone graft, microvasc					
20969	C	Bone/skin graft, microvasc					
20970	C	Bone/skin graft, iliac crest					
20972	C	Bone/skin graft, metatarsal					
20973	C	Bone/skin graft, great toe					
20974	A	Electrical bone stimulation					
20975	T	Electrical bone stimulation	0049	15.04	$745.93	$356.95	$149.19
20979	E	Us bone stimulation					
20999	N	Musculoskeletal surgery					
21010	T	Incision of jaw joint	0254	12.45	$617.47	$272.41	$123.49
21015	T	Resection of facial tumor	0254	12.45	$617.47	$272.41	$123.49
21025	T	Excision of bone, lower jaw	0256	25.40	$1,259.74	$623.05	$251.95
21026	T	Excision of facial bone(s)	0256	25.40	$1,259.74	$623.05	$251.95
21029	T	Contour of face bone lesion	0256	25.40	$1,259.74	$623.05	$251.95
21030	T	Removal of face bone lesion	0254	12.45	$617.47	$272.41	$123.49
21031	T	Remove exostosis, mandible	0253	12.02	$596.14	$284.00	$119.23
21032	T	Remove exostosis, maxilla	0253	12.02	$596.14	$284.00	$119.23
21034	T	Removal of face bone lesion	0256	25.40	$1,259.74	$623.05	$251.95
21040	T	Removal of jaw bone lesion	0253	12.02	$596.14	$284.00	$119.23
21041	T	Removal of jaw bone lesion	0256	25.40	$1,259.74	$623.05	$251.95
21044	T	Removal of jaw bone lesion	0256	25.40	$1,259.74	$623.05	$251.95
21045	C	Extensive jaw surgery					
21050	T	Removal of jaw joint	0256	25.40	$1,259.74	$623.05	$251.95
21060	T	Remove jaw joint cartilage	0256	25.40	$1,259.74	$623.05	$251.95
21070	T	Remove coronoid process	0256	25.40	$1,259.74	$623.05	$251.95
21076	T	Prepare face/oral prosthesis	0254	12.45	$617.47	$272.41	$123.49
21077	T	Prepare face/oral prosthesis	0256	25.40	$1,259.74	$623.05	$251.95
21079	T	Prepare face/oral prosthesis	0256	25.40	$1,259.74	$623.05	$251.95
21080	T	Prepare face/oral prosthesis	0256	25.40	$1,259.74	$623.05	$251.95
21081	T	Prepare face/oral prosthesis	0256	25.40	$1,259.74	$623.05	$251.95
21082	T	Prepare face/oral prosthesis	0256	25.40	$1,259.74	$623.05	$251.95
21083	T	Prepare face/oral prosthesis	0256	25.40	$1,259.74	$623.05	$251.95
21084	T	Prepare face/oral prosthesis	0256	25.40	$1,259.74	$623.05	$251.95
21085	T	Prepare face/oral prosthesis	0253	12.02	$596.14	$284.00	$119.23
21086	T	Prepare face/oral prosthesis	0256	25.40	$1,259.74	$623.05	$251.95
21087	T	Prepare face/oral prosthesis	0256	25.40	$1,259.74	$623.05	$251.95
21088	T	Prepare face/oral prosthesis	0256	25.40	$1,259.74	$623.05	$251.95

CPT codes and descriptions only are copyright American Medical Association. All Rights Reserved. Applicable FARS/DFARS Apply.
Copyright American Dental Association. All rights reserved.
*Code is new in 2001.

ADDENDUM B.—HOSPITAL OUTPATIENT DEPARTMENT (HOPD) PAYMENT STATUS BY HCPCS CODE AND RELATED INFORMATION—Continued

CPT/ HCPCS	HOPD Status Indicator	Description	APC	Relative Weight	Payment Rate	National Unadjusted Coinsurance	Minimum Unadjusted Coinsurance
21089	T	Prepare face/oral prosthesis	0253	12.02	$596.14	$284.00	$119.23
21100	T	Maxillofacial fixation	0256	25.40	$1,259.74	$623.05	$251.95
21110	T	Interdental fixation	0254	12.45	$617.47	$272.41	$123.49
21116	N	Injection, jaw joint x-ray					
21120	T	Reconstruction of chin	0254	12.45	$617.47	$272.41	$123.49
21121	T	Reconstruction of chin	0254	12.45	$617.47	$272.41	$123.49
21122	T	Reconstruction of chin	0254	12.45	$617.47	$272.41	$123.49
21123	T	Reconstruction of chin	0254	12.45	$617.47	$272.41	$123.49
21125	T	Augmentation, lower jaw bone	0254	12.45	$617.47	$272.41	$123.49
21127	T	Augmentation, lower jaw bone	0256	25.40	$1,259.74	$623.05	$251.95
21137	T	Reduction of forehead	0254	12.45	$617.47	$272.41	$123.49
21138	T	Reduction of forehead	0256	25.40	$1,259.74	$623.05	$251.95
21139	T	Reduction of forehead	0256	25.40	$1,259.74	$623.05	$251.95
21141	C	Reconstruct midface, lefort					
21142	C	Reconstruct midface, lefort					
21143	C	Reconstruct midface, lefort					
21145	C	Reconstruct midface, lefort					
21146	C	Reconstruct midface, lefort					
21147	C	Reconstruct midface, lefort					
21150	C	Reconstruct midface, lefort					
21151	C	Reconstruct midface, lefort					
21154	C	Reconstruct midface, lefort					
21155	C	Reconstruct midface, lefort					
21159	C	Reconstruct midface, lefort					
21160	C	Reconstruct midface, lefort					
21172	C	Reconstruct orbit/forehead					
21175	C	Reconstruct orbit/forehead					
21179	C	Reconstruct entire forehead					
21180	C	Reconstruct entire forehead					
21181	T	Contour cranial bone lesion	0254	12.45	$617.47	$272.41	$123.49
21182	C	Reconstruct cranial bone					
21183	C	Reconstruct cranial bone					
21184	C	Reconstruct cranial bone					
21188	C	Reconstruction of midface					
21193	C	Reconst lwr jaw w/o graft					
21194	C	Reconst lwr jaw w/ graft					
21195	C	Reconst lwr jaw w/o fixation					
21196	C	Reconst lwr jaw w/fixation					
21198	T	Reconst lwr jaw segment	0256	25.40	$1,259.74	$623.05	$251.95
*21199	T	Reconst lwr jaw w/advance	0256	25.40	$1,259.74	$623.05	$251.95
21206	T	Reconstruct upper jaw bone	0256	25.40	$1,259.74	$623.05	$251.95
21208	T	Augmentation of facial bones	0256	25.40	$1,259.74	$623.05	$251.95
21209	T	Reduction of facial bones	0256	25.40	$1,259.74	$623.05	$251.95
21210	T	Face bone graft	0256	25.40	$1,259.74	$623.05	$251.95
21215	T	Lower jaw bone graft	0256	25.40	$1,259.74	$623.05	$251.95
21230	T	Rib cartilage graft	0256	25.40	$1,259.74	$623.05	$251.95
21235	T	Ear cartilage graft	0254	12.45	$617.47	$272.41	$123.49
21240	T	Reconstruction of jaw joint	0256	25.40	$1,259.74	$623.05	$251.95
21242	T	Reconstruction of jaw joint	0256	25.40	$1,259.74	$623.05	$251.95
21243	T	Reconstruction of jaw joint	0256	25.40	$1,259.74	$623.05	$251.95
21244	T	Reconstruction of lower jaw	0256	25.40	$1,259.74	$623.05	$251.95
21245	T	Reconstruction of jaw	0256	25.40	$1,259.74	$623.05	$251.95
21246	T	Reconstruction of jaw	0256	25.40	$1,259.74	$623.05	$251.95
21247	C	Reconstruct lower jaw bone					
21248	T	Reconstruction of jaw	0256	25.40	$1,259.74	$623.05	$251.95
21249	T	Reconstruction of jaw	0256	25.40	$1,259.74	$623.05	$251.95
21255	C	Reconstruct lower jaw bone					
21256	C	Reconstruction of orbit					
21260	T	Revise eye sockets	0256	25.40	$1,259.74	$623.05	$251.95
21261	T	Revise eye sockets	0256	25.40	$1,259.74	$623.05	$251.95
21263	T	Revise eye sockets	0256	25.40	$1,259.74	$623.05	$251.95
21267	T	Revise eye sockets	0256	25.40	$1,259.74	$623.05	$251.95
21268	C	Revise eye sockets					
21270	T	Augmentation, cheek bone	0256	25.40	$1,259.74	$623.05	$251.95
21275	T	Revision, orbitofacial bones	0256	25.40	$1,259.74	$623.05	$251.95
21280	T	Revision of eyelid	0256	25.40	$1,259.74	$623.05	$251.95
21282	T	Revision of eyelid	0253	12.02	$596.14	$284.00	$119.23
21295	T	Revision of jaw muscle/bone	0253	12.02	$596.14	$284.00	$119.23
21296	T	Revision of jaw muscle/bone	0254	12.45	$617.47	$272.41	$123.49
21299	T	Cranio/maxillofacial surgery	0253	12.02	$596.14	$284.00	$119.23
21300	T	Treatment of skull fracture	0253	12.02	$596.14	$284.00	$119.23
21310	T	Treatment of nose fracture	0253	12.02	$596.14	$284.00	$119.23
21315	T	Treatment of nose fracture	0253	12.02	$596.14	$284.00	$119.23
21320	T	Treatment of nose fracture	0253	12.02	$596.14	$284.00	$119.23

CPT codes and descriptions only are copyright American Medical Association. All Rights Reserved. Applicable FARS/DFARS Apply.
Copyright American Dental Association. All rights reserved.
*Code is new in 2001.

ADDENDUM B.—HOSPITAL OUTPATIENT DEPARTMENT (HOPD) PAYMENT STATUS BY HCPCS CODE AND RELATED INFORMATION—Continued

CPT/ HCPCS	HOPD Status Indicator	Description	APC	Relative Weight	Payment Rate	National Unadjusted Coinsurance	Minimum Unadjusted Coinsurance
21325	T	Treatment of nose fracture	0253	12.02	$596.14	$284.00	$119.23
21330	T	Treatment of nose fracture	0254	12.45	$617.47	$272.41	$123.49
21335	T	Treatment of nose fracture	0254	12.45	$617.47	$272.41	$123.49
21336	T	Treat nasal septal fracture	0046	22.29	$1,105.50	$535.76	$221.10
21337	T	Treat nasal septal fracture	0253	12.02	$596.14	$284.00	$119.23
21338	T	Treat nasoethmoid fracture	0254	12.45	$617.47	$272.41	$123.49
21339	T	Treat nasoethmoid fracture	0254	12.45	$617.47	$272.41	$123.49
21340	T	Treatment of nose fracture	0256	25.40	$1,259.74	$623.05	$251.95
21343	C	Treatment of sinus fracture					
21344	C	Treatment of sinus fracture					
21345	T	Treat nose/jaw fracture	0254	12.45	$617.47	$272.41	$123.49
21346	C	Treat nose/jaw fracture					
21347	C	Treat nose/jaw fracture					
21348	C	Treat nose/jaw fracture					
21355	T	Treat cheek bone fracture	0256	25.40	$1,259.74	$623.05	$251.95
21356	C	Treat cheek bone fracture					
21360	C	Treat cheek bone fracture					
21365	C	Treat cheek bone fracture					
21366	C	Treat cheek bone fracture					
21385	C	Treat eye socket fracture					
21386	C	Treat eye socket fracture					
21387	C	Treat eye socket fracture					
21390	C	Treat eye socket fracture					
21395	C	Treat eye socket fracture					
21400	T	Treat eye socket fracture	0252	5.18	$256.90	$114.24	$51.38
21401	T	Treat eye socket fracture	0253	12.02	$596.14	$284.00	$119.23
21406	T	Treat eye socket fracture	0256	25.40	$1,259.74	$623.05	$251.95
21407	T	Treat eye socket fracture	0256	25.40	$1,259.74	$623.05	$251.95
21408	C	Treat eye socket fracture					
21421	T	Treat mouth roof fracture	0254	12.45	$617.47	$272.41	$123.49
21422	C	Treat mouth roof fracture					
21423	C	Treat mouth roof fracture					
21431	C	Treat craniofacial fracture					
21432	C	Treat craniofacial fracture					
21433	C	Treat craniofacial fracture					
21435	C	Treat craniofacial fracture					
21436	C	Treat craniofacial fracture					
21440	T	Treat dental ridge fracture	0253	12.02	$596.14	$284.00	$119.23
21445	T	Treat dental ridge fracture	0254	12.45	$617.47	$272.41	$123.49
21450	T	Treat lower jaw fracture	0251	1.68	$83.32	$27.99	$16.66
21451	T	Treat lower jaw fracture	0254	12.45	$617.47	$272.41	$123.49
21452	T	Treat lower jaw fracture	0253	12.02	$596.14	$284.00	$119.23
21453	T	Treat lower jaw fracture	0256	25.40	$1,259.74	$623.05	$251.95
21454	T	Treat lower jaw fracture	0254	12.45	$617.47	$272.41	$123.49
21461	T	Treat lower jaw fracture	0256	25.40	$1,259.74	$623.05	$251.95
21462	T	Treat lower jaw fracture	0256	25.40	$1,259.74	$623.05	$251.95
21465	T	Treat lower jaw fracture	0256	25.40	$1,259.74	$623.05	$251.95
21470	T	Treat lower jaw fracture	0256	25.40	$1,259.74	$623.05	$251.95
21480	T	Reset dislocated jaw	0251	1.68	$83.32	$27.99	$16.66
21485	T	Reset dislocated jaw	0253	12.02	$596.14	$284.00	$119.23
21490	T	Repair dislocated jaw	0256	25.40	$1,259.74	$623.05	$251.95
21493	T	Treat hyoid bone fracture	0252	5.18	$256.90	$114.24	$51.38
21494	T	Treat hyoid bone fracture	0252	5.18	$256.90	$114.24	$51.38
21495	C	Treat hyoid bone fracture					
21497	T	Interdental wiring	0253	12.02	$596.14	$284.00	$119.23
21499	T	Head surgery procedure	0253	12.02	$596.14	$284.00	$119.23
21501	T	Drain neck/chest lesion	0008	6.15	$305.02	$113.67	$61.00
21502	T	Drain chest lesion	0050	21.13	$1,047.96	$513.86	$209.59
21510	C	Drainage of bone lesion					
21550	T	Biopsy of neck/chest	0019	4.00	$198.39	$78.91	$39.68
21555	T	Remove lesion, neck/chest	0022	12.49	$619.45	$292.94	$123.89
21556	T	Remove lesion, neck/chest	0022	12.49	$619.45	$292.94	$123.89
21557	C	Remove tumor, neck/chest					
21600	T	Partial removal of rib	0050	21.13	$1,047.96	$513.86	$209.59
21610	T	Partial removal of rib	0050	21.13	$1,047.96	$513.86	$209.59
21615	C	Removal of rib					
21616	C	Removal of rib and nerves					
21620	C	Partial removal of sternum					
21627	C	Sternal debridement					
21630	C	Extensive sternum surgery					
21632	C	Extensive sternum surgery					
21700	T	Revision of neck muscle	0008	6.15	$305.02	$113.67	$61.00
21705	C	Revision of neck muscle/rib					
21720	T	Revision of neck muscle	0008	6.15	$305.02	$113.67	$61.00

CPT codes and descriptions only are copyright American Medical Association. All Rights Reserved. Applicable FARS/DFARS Apply.
Copyright American Dental Association. All rights reserved.
*Code is new in 2001.

ADDENDUM B.—HOSPITAL OUTPATIENT DEPARTMENT (HOPD) PAYMENT STATUS BY HCPCS CODE AND RELATED INFORMATION—Continued

CPT/ HCPCS	HOPD Status Indicator	Description	APC	Relative Weight	Payment Rate	National Unadjusted Coinsurance	Minimum Unadjusted Coinsurance
21725	T	Revision of neck muscle	0008	6.15	$305.02	$113.67	$61.00
21740	C	Reconstruction of sternum					
21750	C	Repair of sternum separation					
21800	T	Treatment of rib fracture	0043	1.64	$81.34	$25.46	$16.27
21805	T	Treatment of rib fracture	0046	22.29	$1,105.50	$535.76	$221.10
21810	C	Treatment of rib fracture(s)					
21820	T	Treat sternum fracture	0043	1.64	$81.34	$25.46	$16.27
21825	C	Treat sternum fracture					
21899	T	Neck/chest surgery procedure	0252	5.18	$256.90	$114.24	$51.38
21920	T	Biopsy soft tissue of back	0020	6.51	$322.87	$130.53	$64.57
21925	T	Biopsy soft tissue of back	0022	12.49	$619.45	$292.94	$123.89
21930	T	Remove lesion, back or flank	0022	12.49	$619.45	$292.94	$123.89
21935	T	Remove tumor, back	0022	12.49	$619.45	$292.94	$123.89
22100	C	Remove part of neck vertebra					
22101	C	Remove part, thorax vertebra					
22102	C	Remove part, lumbar vertebra					
22103	C	Remove extra spine segment					
22110	C	Remove part of neck vertebra					
22112	C	Remove part, thorax vertebra					
22114	C	Remove part, lumbar vertebra					
22116	C	Remove extra spine segment					
22210	C	Revision of neck spine					
22212	C	Revision of thorax spine					
22214	C	Revision of lumbar spine					
22216	C	Revise, extra spine segment					
22220	C	Revision of neck spine					
22222	C	Revision of thorax spine					
22224	C	Revision of lumbar spine					
22226	C	Revise, extra spine segment					
22305	T	Treat spine process fracture	0043	1.64	$81.34	$25.46	$16.27
22310	T	Treat spine fracture	0043	1.64	$81.34	$25.46	$16.27
22315	T	Treat spine fracture	0043	1.64	$81.34	$25.46	$16.27
22318	C	Treat odontoid fx w/o graft					
22319	C	Treat odontoid fx w/graft					
22325	C	Treat spine fracture					
22326	C	Treat neck spine fracture					
22327	C	Treat thorax spine fracture					
22328	C	Treat each add spine fx					
22505	T	Manipulation of spine	0045	11.02	$546.55	$277.12	$109.31
*22520	T	Percut vertebroplasty thor	0049	15.04	$745.93	$356.95	$149.19
*22521	T	Percut vertebroplasty lumb	0049	15.04	$745.93	$356.95	$149.19
*22522	T	Percut vertebroplasty addl	0049	15.04	$745.93	$356.95	$149.19
22548	C	Neck spine fusion					
22554	C	Neck spine fusion					
22556	C	Thorax spine fusion					
22558	C	Lumbar spine fusion					
22585	C	Additional spinal fusion					
22590	C	Spine & skull spinal fusion					
22595	C	Neck spinal fusion					
22600	C	Neck spine fusion					
22610	C	Thorax spine fusion					
22612	C	Lumbar spine fusion					
22614	C	Spine fusion, extra segment					
22630	C	Lumbar spine fusion					
22632	C	Spine fusion, extra segment					
22800	C	Fusion of spine					
22802	C	Fusion of spine					
22804	C	Fusion of spine					
22808	C	Fusion of spine					
22810	C	Fusion of spine					
22812	C	Fusion of spine					
22818	C	Kyphectomy, 1-2 segments					
22819	C	Kyphectomy, 3 or more					
22830	C	Exploration of spinal fusion					
22840	C	Insert spine fixation device					
22841	C	Insert spine fixation device					
22842	C	Insert spine fixation device					
22843	C	Insert spine fixation device					
22844	C	Insert spine fixation device					
22845	C	Insert spine fixation device					
22846	C	Insert spine fixation device					
22847	C	Insert spine fixation device					
22848	C	Insert pelv fixation device					
22849	C	Reinsert spinal fixation					

CPT codes and descriptions only are copyright American Medical Association. All Rights Reserved. Applicable FARS/DFARS Apply.
Copyright American Dental Association. All rights reserved.
*Code is new in 2001.

ADDENDUM B.—HOSPITAL OUTPATIENT DEPARTMENT (HOPD) PAYMENT STATUS BY HCPCS CODE AND RELATED INFORMATION—Continued

CPT/ HCPCS	HOPD Status Indicator	Description	APC	Relative Weight	Payment Rate	National Unadjusted Coinsurance	Minimum Unadjusted Coinsurance
22850	C	Remove spine fixation device					
22851	C	Apply spine prosth device					
22852	C	Remove spine fixation device					
22855	C	Remove spine fixation device					
22899	T	Spine surgery procedure	0043	1.64	$81.34	$25.46	$16.27
22900	T	Remove abdominal wall lesion	0022	12.49	$619.45	$292.94	$123.89
22999	T	Abdomen surgery procedure	0022	12.49	$619.45	$292.94	$123.89
23000	T	Removal of calcium deposits	0021	10.49	$520.26	$236.51	$104.05
23020	T	Release shoulder joint	0051	27.76	$1,376.79	$675.24	$275.36
23030	T	Drain shoulder lesion	0008	6.15	$305.02	$113.67	$61.00
23031	T	Drain shoulder bursa	0008	6.15	$305.02	$113.67	$61.00
23035	C	Drain shoulder bone lesion					
23040	T	Exploratory shoulder surgery	0050	21.13	$1,047.96	$513.86	$209.59
23044	T	Exploratory shoulder surgery	0050	21.13	$1,047.96	$513.86	$209.59
23065	T	Biopsy shoulder tissues	0021	10.49	$520.26	$236.51	$104.05
23066	T	Biopsy shoulder tissues	0022	12.49	$619.45	$292.94	$123.89
23075	T	Removal of shoulder lesion	0021	10.49	$520.26	$236.51	$104.05
23076	T	Removal of shoulder lesion	0022	12.49	$619.45	$292.94	$123.89
23077	T	Remove tumor of shoulder	0022	12.49	$619.45	$292.94	$123.89
23100	T	Biopsy of shoulder joint	0049	15.04	$745.93	$356.95	$149.19
23101	T	Shoulder joint surgery	0050	21.13	$1,047.96	$513.86	$209.59
23105	T	Remove shoulder joint lining	0050	21.13	$1,047.96	$513.86	$209.59
23106	T	Incision of collarbone joint	0050	21.13	$1,047.96	$513.86	$209.59
23107	T	Explore treat shoulder joint	0050	21.13	$1,047.96	$513.86	$209.59
23120	T	Partial removal, collar bone	0051	27.76	$1,376.79	$675.24	$275.36
23125	C	Removal of collar bone					
23130	T	Remove shoulder bone, part	0051	27.76	$1,376.79	$675.24	$275.36
23140	T	Removal of bone lesion	0049	15.04	$745.93	$356.95	$149.19
23145	T	Removal of bone lesion	0050	21.13	$1,047.96	$513.86	$209.59
23146	T	Removal of bone lesion	0050	21.13	$1,047.96	$513.86	$209.59
23150	T	Removal of humerus lesion	0050	21.13	$1,047.96	$513.86	$209.59
23155	T	Removal of humerus lesion	0050	21.13	$1,047.96	$513.86	$209.59
23156	T	Removal of humerus lesion	0050	21.13	$1,047.96	$513.86	$209.59
23170	T	Remove collar bone lesion	0050	21.13	$1,047.96	$513.86	$209.59
23172	T	Remove shoulder blade lesion	0050	21.13	$1,047.96	$513.86	$209.59
23174	T	Remove humerus lesion	0050	21.13	$1,047.96	$513.86	$209.59
23180	T	Remove collar bone lesion	0050	21.13	$1,047.96	$513.86	$209.59
23182	T	Remove shoulder blade lesion	0050	21.13	$1,047.96	$513.86	$209.59
23184	T	Remove humerus lesion	0050	21.13	$1,047.96	$513.86	$209.59
23190	T	Partial removal of scapula	0050	21.13	$1,047.96	$513.86	$209.59
23195	C	Removal of head of humerus					
23200	C	Removal of collar bone					
23210	C	Removal of shoulder blade					
23220	C	Partial removal of humerus					
23221	C	Partial removal of humerus					
23222	C	Partial removal of humerus					
23330	T	Remove shoulder foreign body	0019	4.00	$198.39	$78.91	$39.68
23331	T	Remove shoulder foreign body	0022	12.49	$619.45	$292.94	$123.89
23332	C	Remove shoulder foreign body					
23350	N	Injection for shoulder x-ray					
23395	C	Muscle transfer,shoulder/arm					
23397	C	Muscle transfers					
23400	C	Fixation of shoulder blade					
23405	T	Incision of tendon & muscle	0050	21.13	$1,047.96	$513.86	$209.59
23406	T	Incise tendon(s) & muscle(s)	0050	21.13	$1,047.96	$513.86	$209.59
23410	T	Repair of tendon(s)	0052	36.16	$1,793.39	$930.91	$358.68
23412	T	Repair of tendon(s)	0052	36.16	$1,793.39	$930.91	$358.68
23415	T	Release of shoulder ligament	0051	27.76	$1,376.79	$675.24	$275.36
23420	T	Repair of shoulder	0052	36.16	$1,793.39	$930.91	$358.68
23430	T	Repair biceps tendon	0052	36.16	$1,793.39	$930.91	$358.68
23440	C	Remove/transplant tendon					
23450	T	Repair shoulder capsule	0052	36.16	$1,793.39	$930.91	$358.68
23455	T	Repair shoulder capsule	0052	36.16	$1,793.39	$930.91	$358.68
23460	T	Repair shoulder capsule	0052	36.16	$1,793.39	$930.91	$358.68
23462	T	Repair shoulder capsule	0052	36.16	$1,793.39	$930.91	$358.68
23465	T	Repair shoulder capsule	0052	36.16	$1,793.39	$930.91	$358.68
23466	T	Repair shoulder capsule	0052	36.16	$1,793.39	$930.91	$358.68
23470	C	Reconstruct shoulder joint					
23472	C	Reconstruct shoulder joint					
23480	T	Revision of collar bone	0051	27.76	$1,376.79	$675.24	$275.36
23485	T	Revision of collar bone	0051	27.76	$1,376.79	$675.24	$275.36
23490	T	Reinforce clavicle	0051	27.76	$1,376.79	$675.24	$275.36
23491	T	Reinforce shoulder bones	0051	27.76	$1,376.79	$675.24	$275.36
23500	T	Treat clavicle fracture	0043	1.64	$81.34	$25.46	$16.27

CPT codes and descriptions only are copyright American Medical Association. All Rights Reserved. Applicable FARS/DFARS Apply.
Copyright American Dental Association. All rights reserved.
*Code is new in 2001.

ADDENDUM B.—HOSPITAL OUTPATIENT DEPARTMENT (HOPD) PAYMENT STATUS BY HCPCS CODE AND RELATED INFORMATION—Continued

CPT/ HCPCS	HOPD Status Indicator	Description	APC	Relative Weight	Payment Rate	National Unadjusted Coinsurance	Minimum Unadjusted Coinsurance
23505	T	Treat clavicle fracture	0043	1.64	$81.34	$25.46	$16.27
23515	T	Treat clavicle fracture	0046	22.29	$1,105.50	$535.76	$221.10
23520	T	Treat clavicle dislocation	0043	1.64	$81.34	$25.46	$16.27
23525	T	Treat clavicle dislocation	0043	1.64	$81.34	$25.46	$16.27
23530	T	Treat clavicle dislocation	0046	22.29	$1,105.50	$535.76	$221.10
23532	T	Treat clavicle dislocation	0046	22.29	$1,105.50	$535.76	$221.10
23540	T	Treat clavicle dislocation	0043	1.64	$81.34	$25.46	$16.27
23545	T	Treat clavicle dislocation	0043	1.64	$81.34	$25.46	$16.27
23550	T	Treat clavicle dislocation	0046	22.29	$1,105.50	$535.76	$221.10
23552	T	Treat clavicle dislocation	0046	22.29	$1,105.50	$535.76	$221.10
23570	T	Treat shoulder blade fx	0043	1.64	$81.34	$25.46	$16.27
23575	T	Treat shoulder blade fx	0043	1.64	$81.34	$25.46	$16.27
23585	T	Treat scapula fracture	0046	22.29	$1,105.50	$535.76	$221.10
23600	T	Treat humerus fracture	0044	2.17	$107.63	$38.08	$21.53
23605	T	Treat humerus fracture	0044	2.17	$107.63	$38.08	$21.53
23615	T	Treat humerus fracture	0046	22.29	$1,105.50	$535.76	$221.10
23616	T	Treat humerus fracture	0046	22.29	$1,105.50	$535.76	$221.10
23620	T	Treat humerus fracture	0044	2.17	$107.63	$38.08	$21.53
23625	T	Treat humerus fracture	0044	2.17	$107.63	$38.08	$21.53
23630	T	Treat humerus fracture	0046	22.29	$1,105.50	$535.76	$221.10
23650	T	Treat shoulder dislocation	0043	1.64	$81.34	$25.46	$16.27
23655	T	Treat shoulder dislocation	0045	11.02	$546.55	$277.12	$109.31
23660	T	Treat shoulder dislocation	0046	22.29	$1,105.50	$535.76	$221.10
23665	T	Treat dislocation/fracture	0044	2.17	$107.63	$38.08	$21.53
23670	T	Treat dislocation/fracture	0046	22.29	$1,105.50	$535.76	$221.10
23675	T	Treat dislocation/fracture	0044	2.17	$107.63	$38.08	$21.53
23680	T	Treat dislocation/fracture	0046	22.29	$1,105.50	$535.76	$221.10
23700	T	Fixation of shoulder	0045	11.02	$546.55	$277.12	$109.31
23800	T	Fusion of shoulder joint	0051	27.76	$1,376.79	$675.24	$275.36
23802	T	Fusion of shoulder joint	0051	27.76	$1,376.79	$675.24	$275.36
23900	C	Amputation of arm & girdle					
23920	C	Amputation at shoulder joint					
23921	T	Amputation follow-up surgery	0026	12.11	$600.61	$277.92	$120.12
23929	T	Shoulder surgery procedure	0043	1.64	$81.34	$25.46	$16.27
23930	T	Drainage of arm lesion	0008	6.15	$305.02	$113.67	$61.00
23931	T	Drainage of arm bursa	0008	6.15	$305.02	$113.67	$61.00
23935	T	Drain arm/elbow bone lesion	0049	15.04	$745.93	$356.95	$149.19
24000	T	Exploratory elbow surgery	0050	21.13	$1,047.96	$513.86	$209.59
24006	T	Release elbow joint	0050	21.13	$1,047.96	$513.86	$209.59
24065	T	Biopsy arm/elbow soft tissue	0020	6.51	$322.87	$130.53	$64.57
24066	T	Biopsy arm/elbow soft tissue	0020	6.51	$322.87	$130.53	$64.57
24075	T	Remove arm/elbow lesion	0021	10.49	$520.26	$236.51	$104.05
24076	T	Remove arm/elbow lesion	0022	12.49	$619.45	$292.94	$123.89
24077	T	Remove tumor of arm/elbow	0022	12.49	$619.45	$292.94	$123.89
24100	T	Biopsy elbow joint lining	0049	15.04	$745.93	$356.95	$149.19
24101	T	Explore/treat elbow joint	0050	21.13	$1,047.96	$513.86	$209.59
24102	T	Remove elbow joint lining	0050	21.13	$1,047.96	$513.86	$209.59
24105	T	Removal of elbow bursa	0049	15.04	$745.93	$356.95	$149.19
24110	T	Remove humerus lesion	0049	15.04	$745.93	$356.95	$149.19
24115	T	Remove/graft bone lesion	0050	21.13	$1,047.96	$513.86	$209.59
24116	T	Remove/graft bone lesion	0050	21.13	$1,047.96	$513.86	$209.59
24120	T	Remove elbow lesion	0049	15.04	$745.93	$356.95	$149.19
24125	T	Remove/graft bone lesion	0050	21.13	$1,047.96	$513.86	$209.59
24126	T	Remove/graft bone lesion	0050	21.13	$1,047.96	$513.86	$209.59
24130	T	Removal of head of radius	0050	21.13	$1,047.96	$513.86	$209.59
24134	T	Removal of arm bone lesion	0050	21.13	$1,047.96	$513.86	$209.59
24136	T	Remove radius bone lesion	0050	21.13	$1,047.96	$513.86	$209.59
24138	T	Remove elbow bone lesion	0050	21.13	$1,047.96	$513.86	$209.59
24140	T	Partial removal of arm bone	0050	21.13	$1,047.96	$513.86	$209.59
24145	T	Partial removal of radius	0050	21.13	$1,047.96	$513.86	$209.59
24147	T	Partial removal of elbow	0050	21.13	$1,047.96	$513.86	$209.59
24149	C	Radical resection of elbow					
24150	C	Extensive humerus surgery					
24151	C	Extensive humerus surgery					
24152	C	Extensive radius surgery					
24153	C	Extensive radius surgery					
24155	T	Removal of elbow joint	0051	27.76	$1,376.79	$675.24	$275.36
24160	T	Remove elbow joint implant	0050	21.13	$1,047.96	$513.86	$209.59
24164	T	Remove radius head implant	0050	21.13	$1,047.96	$513.86	$209.59
24200	T	Removal of arm foreign body	0019	4.00	$198.39	$78.91	$39.68
24201	T	Removal of arm foreign body	0021	10.49	$520.26	$236.51	$104.05
24220	N	Injection for elbow x-ray					
24301	T	Muscle/tendon transfer	0050	21.13	$1,047.96	$513.86	$209.59
24305	T	Arm tendon lengthening	0050	21.13	$1,047.96	$513.86	$209.59

CPT codes and descriptions only are copyright American Medical Association. All Rights Reserved. Applicable FARS/DFARS Apply.
Copyright American Dental Association. All rights reserved.
*Code is new in 2001.

ADDENDUM B.—HOSPITAL OUTPATIENT DEPARTMENT (HOPD) PAYMENT STATUS BY HCPCS CODE AND RELATED INFORMATION—Continued

CPT/ HCPCS	HOPD Status Indicator	Description	APC	Relative Weight	Payment Rate	National Unadjusted Coinsurance	Minimum Unadjusted Coinsurance
24310	T	Revision of arm tendon	0049	15.04	$745.93	$356.95	$149.19
24320	T	Repair of arm tendon	0051	27.76	$1,376.79	$675.24	$275.36
24330	T	Revision of arm muscles	0051	27.76	$1,376.79	$675.24	$275.36
24331	T	Revision of arm muscles	0051	27.76	$1,376.79	$675.24	$275.36
24340	T	Repair of biceps tendon	0051	27.76	$1,376.79	$675.24	$275.36
24341	T	Repair arm tendon/muscle	0051	27.76	$1,376.79	$675.24	$275.36
24342	T	Repair of ruptured tendon	0051	27.76	$1,376.79	$675.24	$275.36
24350	T	Repair of tennis elbow	0050	21.13	$1,047.96	$513.86	$209.59
24351	T	Repair of tennis elbow	0050	21.13	$1,047.96	$513.86	$209.59
24352	T	Repair of tennis elbow	0050	21.13	$1,047.96	$513.86	$209.59
24354	T	Repair of tennis elbow	0050	21.13	$1,047.96	$513.86	$209.59
24356	T	Revision of tennis elbow	0050	21.13	$1,047.96	$513.86	$209.59
24360	T	Reconstruct elbow joint	0047	22.09	$1,095.58	$537.03	$219.12
24361	T	Reconstruct elbow joint	0048	29.06	$1,441.26	$725.94	$288.25
24362	T	Reconstruct elbow joint	0048	29.06	$1,441.26	$725.94	$288.25
24363	T	Replace elbow joint	0048	29.06	$1,441.26	$725.94	$288.25
24365	T	Reconstruct head of radius	0047	22.09	$1,095.58	$537.03	$219.12
24366	T	Reconstruct head of radius	0048	29.06	$1,441.26	$725.94	$288.25
24400	T	Revision of humerus	0050	21.13	$1,047.96	$513.86	$209.59
24410	T	Revision of humerus	0050	21.13	$1,047.96	$513.86	$209.59
24420	T	Revision of humerus	0051	27.76	$1,376.79	$675.24	$275.36
24430	T	Repair of humerus	0051	27.76	$1,376.79	$675.24	$275.36
24435	T	Repair humerus with graft	0051	27.76	$1,376.79	$675.24	$275.36
24470	T	Revision of elbow joint	0051	27.76	$1,376.79	$675.24	$275.36
24495	T	Decompression of forearm	0050	21.13	$1,047.96	$513.86	$209.59
24498	T	Reinforce humerus	0051	27.76	$1,376.79	$675.24	$275.36
24500	T	Treat humerus fracture	0044	2.17	$107.63	$38.08	$21.53
24505	T	Treat humerus fracture	0044	2.17	$107.63	$38.08	$21.53
24515	T	Treat humerus fracture	0046	22.29	$1,105.50	$535.76	$221.10
24516	T	Treat humerus fracture	0046	22.29	$1,105.50	$535.76	$221.10
24530	T	Treat humerus fracture	0044	2.17	$107.63	$38.08	$21.53
24535	T	Treat humerus fracture	0044	2.17	$107.63	$38.08	$21.53
24538	T	Treat humerus fracture	0046	22.29	$1,105.50	$535.76	$221.10
24545	T	Treat humerus fracture	0046	22.29	$1,105.50	$535.76	$221.10
24546	T	Treat humerus fracture	0046	22.29	$1,105.50	$535.76	$221.10
24560	T	Treat humerus fracture	0044	2.17	$107.63	$38.08	$21.53
24565	T	Treat humerus fracture	0044	2.17	$107.63	$38.08	$21.53
24566	T	Treat humerus fracture	0046	22.29	$1,105.50	$535.76	$221.10
24575	T	Treat humerus fracture	0046	22.29	$1,105.50	$535.76	$221.10
24576	T	Treat humerus fracture	0044	2.17	$107.63	$38.08	$21.53
24577	T	Treat humerus fracture	0044	2.17	$107.63	$38.08	$21.53
24579	T	Treat humerus fracture	0046	22.29	$1,105.50	$535.76	$221.10
24582	T	Treat humerus fracture	0046	22.29	$1,105.50	$535.76	$221.10
24586	T	Treat elbow fracture	0046	22.29	$1,105.50	$535.76	$221.10
24587	T	Treat elbow fracture	0046	22.29	$1,105.50	$535.76	$221.10
24600	T	Treat elbow dislocation	0044	2.17	$107.63	$38.08	$21.53
24605	T	Treat elbow dislocation	0045	11.02	$546.55	$277.12	$109.31
24615	T	Treat elbow dislocation	0046	22.29	$1,105.50	$535.76	$221.10
24620	T	Treat elbow fracture	0044	2.17	$107.63	$38.08	$21.53
24635	T	Treat elbow fracture	0046	22.29	$1,105.50	$535.76	$221.10
24640	T	Treat elbow dislocation	0044	2.17	$107.63	$38.08	$21.53
24650	T	Treat radius fracture	0044	2.17	$107.63	$38.08	$21.53
24655	T	Treat radius fracture	0044	2.17	$107.63	$38.08	$21.53
24665	T	Treat radius fracture	0046	22.29	$1,105.50	$535.76	$221.10
24666	T	Treat radius fracture	0046	22.29	$1,105.50	$535.76	$221.10
24670	T	Treat ulnar fracture	0044	2.17	$107.63	$38.08	$21.53
24675	T	Treat ulnar fracture	0044	2.17	$107.63	$38.08	$21.53
24685	T	Treat ulnar fracture	0046	22.29	$1,105.50	$535.76	$221.10
24800	T	Fusion of elbow joint	0051	27.76	$1,376.79	$675.24	$275.36
24802	T	Fusion/graft of elbow joint	0051	27.76	$1,376.79	$675.24	$275.36
24900	C	Amputation of upper arm					
24920	C	Amputation of upper arm					
24925	T	Amputation follow-up surgery	0049	15.04	$745.93	$356.95	$149.19
24930	C	Amputation follow-up surgery					
24931	C	Amputate upper arm & implant					
24935	T	Revision of amputation	0052	36.16	$1,793.39	$930.91	$358.68
24940	C	Revision of upper arm					
24999	T	Upper arm/elbow surgery	0044	2.17	$107.63	$38.08	$21.53
25000	T	Incision of tendon sheath	0049	15.04	$745.93	$356.95	$149.19
25020	T	Decompression of forearm	0049	15.04	$745.93	$356.95	$149.19
25023	T	Decompression of forearm	0050	21.13	$1,047.96	$513.86	$209.59
25028	T	Drainage of forearm lesion	0049	15.04	$745.93	$356.95	$149.19
25031	T	Drainage of forearm bursa	0049	15.04	$745.93	$356.95	$149.19
25035	T	Treat forearm bone lesion	0049	15.04	$745.93	$356.95	$149.19

CPT codes and descriptions only are copyright American Medical Association. All Rights Reserved. Applicable FARS/DFARS Apply.
Copyright American Dental Association. All rights reserved.
*Code is new in 2001.

ADDENDUM B.—HOSPITAL OUTPATIENT DEPARTMENT (HOPD) PAYMENT STATUS BY HCPCS CODE AND RELATED INFORMATION—Continued

CPT/ HCPCS	HOPD Status Indicator	Description	APC	Relative Weight	Payment Rate	National Unadjusted Coinsurance	Minimum Unadjusted Coinsurance
25040	T	Explore/treat wrist joint	0050	21.13	$1,047.96	$513.86	$209.59
25065	T	Biopsy forearm soft tissues	0020	6.51	$322.87	$130.53	$64.57
25066	T	Biopsy forearm soft tissues	0022	12.49	$619.45	$292.94	$123.89
25075	T	Removal of forearm lesion	0020	6.51	$322.87	$130.53	$64.57
25076	T	Removal of forearm lesion	0022	12.49	$619.45	$292.94	$123.89
25077	T	Remove tumor, forearm/wrist	0022	12.49	$619.45	$292.94	$123.89
25085	T	Incision of wrist capsule	0049	15.04	$745.93	$356.95	$149.19
25100	T	Biopsy of wrist joint	0049	15.04	$745.93	$356.95	$149.19
25101	T	Explore/treat wrist joint	0050	21.13	$1,047.96	$513.86	$209.59
25105	T	Remove wrist joint lining	0050	21.13	$1,047.96	$513.86	$209.59
25107	T	Remove wrist joint cartilage	0050	21.13	$1,047.96	$513.86	$209.59
25110	T	Remove wrist tendon lesion	0049	15.04	$745.93	$356.95	$149.19
25111	T	Remove wrist tendon lesion	0053	11.32	$561.42	$253.49	$112.28
25112	T	Reremove wrist tendon lesion	0053	11.32	$561.42	$253.49	$112.28
25115	T	Remove wrist/forearm lesion	0049	15.04	$745.93	$356.95	$149.19
25116	T	Remove wrist/forearm lesion	0049	15.04	$745.93	$356.95	$149.19
25118	T	Excise wrist tendon sheath	0050	21.13	$1,047.96	$513.86	$209.59
25119	T	Partial removal of ulna	0050	21.13	$1,047.96	$513.86	$209.59
25120	T	Removal of forearm lesion	0050	21.13	$1,047.96	$513.86	$209.59
25125	T	Remove/graft forearm lesion	0050	21.13	$1,047.96	$513.86	$209.59
25126	T	Remove/graft forearm lesion	0050	21.13	$1,047.96	$513.86	$209.59
25130	T	Removal of wrist lesion	0050	21.13	$1,047.96	$513.86	$209.59
25135	T	Remove & graft wrist lesion	0050	21.13	$1,047.96	$513.86	$209.59
25136	T	Remove & graft wrist lesion	0050	21.13	$1,047.96	$513.86	$209.59
25145	T	Remove forearm bone lesion	0050	21.13	$1,047.96	$513.86	$209.59
25150	T	Partial removal of ulna	0050	21.13	$1,047.96	$513.86	$209.59
25151	T	Partial removal of radius	0050	21.13	$1,047.96	$513.86	$209.59
25170	C	Extensive forearm surgery					
25210	T	Removal of wrist bone	0054	19.66	$975.06	$472.33	$195.01
25215	T	Removal of wrist bones	0054	19.66	$975.06	$472.33	$195.01
25230	T	Partial removal of radius	0050	21.13	$1,047.96	$513.86	$209.59
25240	T	Partial removal of ulna	0050	21.13	$1,047.96	$513.86	$209.59
25246	N	Injection for wrist x-ray					
25248	T	Remove forearm foreign body	0049	15.04	$745.93	$356.95	$149.19
25250	T	Removal of wrist prosthesis	0050	21.13	$1,047.96	$513.86	$209.59
25251	T	Removal of wrist prosthesis	0050	21.13	$1,047.96	$513.86	$209.59
25260	T	Repair forearm tendon/muscle	0050	21.13	$1,047.96	$513.86	$209.59
25263	T	Repair forearm tendon/muscle	0050	21.13	$1,047.96	$513.86	$209.59
25265	T	Repair forearm tendon/muscle	0050	21.13	$1,047.96	$513.86	$209.59
25270	T	Repair forearm tendon/muscle	0050	21.13	$1,047.96	$513.86	$209.59
25272	T	Repair forearm tendon/muscle	0050	21.13	$1,047.96	$513.86	$209.59
25274	T	Repair forearm tendon/muscle	0050	21.13	$1,047.96	$513.86	$209.59
25280	T	Revise wrist/forearm tendon	0050	21.13	$1,047.96	$513.86	$209.59
25290	T	Incise wrist/forearm tendon	0050	21.13	$1,047.96	$513.86	$209.59
25295	T	Release wrist/forearm tendon	0049	15.04	$745.93	$356.95	$149.19
25300	T	Fusion of tendons at wrist	0050	21.13	$1,047.96	$513.86	$209.59
25301	T	Fusion of tendons at wrist	0050	21.13	$1,047.96	$513.86	$209.59
27606	T	Incision of achilles tendon	0049	15.04	$745.93	$356.95	$149.19
27607	T	Treat lower leg bone lesion	0049	15.04	$745.93	$356.95	$149.19
27610	T	Explore/treat ankle joint	0050	21.13	$1,047.96	$513.86	$209.59
27612	T	Exploration of ankle joint	0050	21.13	$1,047.96	$513.86	$209.59
27613	T	Biopsy lower leg soft tissue	0020	6.51	$322.87	$130.53	$64.57
27614	T	Biopsy lower leg soft tissue	0022	12.49	$619.45	$292.94	$123.89
27615	T	Remove tumor, lower leg	0046	22.29	$1,105.50	$535.76	$221.10
27618	T	Remove lower leg lesion	0021	10.49	$520.26	$236.51	$104.05
27619	T	Remove lower leg lesion	0022	12.49	$619.45	$292.94	$123.89
27620	T	Explore/treat ankle joint	0050	21.13	$1,047.96	$513.86	$209.59
27625	T	Remove ankle joint lining	0050	21.13	$1,047.96	$513.86	$209.59
27626	T	Remove ankle joint lining	0050	21.13	$1,047.96	$513.86	$209.59
27630	T	Removal of tendon lesion	0049	15.04	$745.93	$356.95	$149.19
27635	T	Remove lower leg bone lesion	0050	21.13	$1,047.96	$513.86	$209.59
27637	T	Remove/graft leg bone lesion	0050	21.13	$1,047.96	$513.86	$209.59
27638	T	Remove/graft leg bone lesion	0050	21.13	$1,047.96	$513.86	$209.59
27640	T	Partial removal of tibia	0051	27.76	$1,376.79	$675.24	$275.36
27641	T	Partial removal of fibula	0050	21.13	$1,047.96	$513.86	$209.59
27645	C	Extensive lower leg surgery					
27646	C	Extensive lower leg surgery					
27647	T	Extensive ankle/heel surgery	0051	27.76	$1,376.79	$675.24	$275.36
27648	N	Injection for ankle x-ray					
27650	T	Repair achilles tendon	0051	27.76	$1,376.79	$675.24	$275.36
27652	T	Repair/graft achilles tendon	0051	27.76	$1,376.79	$675.24	$275.36
27654	T	Repair of achilles tendon	0051	27.76	$1,376.79	$675.24	$275.36
27656	T	Repair leg fascia defect	0049	15.04	$745.93	$356.95	$149.19
27658	T	Repair of leg tendon, each	0049	15.04	$745.93	$356.95	$149.19

CPT codes and descriptions only are copyright American Medical Association. All Rights Reserved. Applicable FARS/DFARS Apply.
Copyright American Dental Association. All rights reserved.
*Code is new in 2001.

ADDENDUM B.—HOSPITAL OUTPATIENT DEPARTMENT (HOPD) PAYMENT STATUS BY HCPCS CODE AND RELATED INFORMATION—Continued

CPT/ HCPCS	HOPD Status Indicator	Description	APC	Relative Weight	Payment Rate	National Unadjusted Coinsurance	Minimum Unadjusted Coinsurance
27659	T	Repair of leg tendon, each	0049	15.04	$745.93	$356.95	$149.19
27664	T	Repair of leg tendon, each	0049	15.04	$745.93	$356.95	$149.19
27665	T	Repair of leg tendon, each	0050	21.13	$1,047.96	$513.86	$209.59
27675	T	Repair lower leg tendons	0049	15.04	$745.93	$356.95	$149.19
27676	T	Repair lower leg tendons	0050	21.13	$1,047.96	$513.86	$209.59
27680	T	Release of lower leg tendon	0050	21.13	$1,047.96	$513.86	$209.59
27681	T	Release of lower leg tendons	0050	21.13	$1,047.96	$513.86	$209.59
27685	T	Revision of lower leg tendon	0050	21.13	$1,047.96	$513.86	$209.59
27686	T	Revise lower leg tendons	0050	21.13	$1,047.96	$513.86	$209.59
27687	T	Revision of calf tendon	0050	21.13	$1,047.96	$513.86	$209.59
27690	T	Revise lower leg tendon	0051	27.76	$1,376.79	$675.24	$275.36
27691	T	Revise lower leg tendon	0051	27.76	$1,376.79	$675.24	$275.36
27692	T	Revise additional leg tendon	0051	27.76	$1,376.79	$675.24	$275.36
27695	T	Repair of ankle ligament	0050	21.13	$1,047.96	$513.86	$209.59
27696	T	Repair of ankle ligaments	0050	21.13	$1,047.96	$513.86	$209.59
27698	T	Repair of ankle ligament	0050	21.13	$1,047.96	$513.86	$209.59
27700	T	Revision of ankle joint	0047	22.09	$1,095.58	$537.03	$219.12
27702	C	Reconstruct ankle joint					
27703	C	Reconstruction, ankle joint					
27704	T	Removal of ankle implant	0049	15.04	$745.93	$356.95	$149.19
27705	T	Incision of tibia	0051	27.76	$1,376.79	$675.24	$275.36
27707	T	Incision of fibula	0049	15.04	$745.93	$356.95	$149.19
27709	T	Incision of tibia & fibula	0050	21.13	$1,047.96	$513.86	$209.59
27712	C	Realignment of lower leg					
27715	C	Revision of lower leg					
27720	C	Repair of tibia					
27722	C	Repair/graft of tibia					
27724	C	Repair/graft of tibia					
27725	C	Repair of lower leg					
27727	C	Repair of lower leg					
27730	T	Repair of tibia epiphysis	0050	21.13	$1,047.96	$513.86	$209.59
27732	T	Repair of fibula epiphysis	0050	21.13	$1,047.96	$513.86	$209.59
27734	T	Repair lower leg epiphyses	0050	21.13	$1,047.96	$513.86	$209.59
27740	T	Repair of leg epiphyses	0050	21.13	$1,047.96	$513.86	$209.59
27742	T	Repair of leg epiphyses	0051	27.76	$1,376.79	$675.24	$275.36
27745	T	Reinforce tibia	0051	27.76	$1,376.79	$675.24	$275.36
27750	T	Treatment of tibia fracture	0044	2.17	$107.63	$38.08	$21.53
27752	T	Treatment of tibia fracture	0044	2.17	$107.63	$38.08	$21.53
27756	T	Treatment of tibia fracture	0046	22.29	$1,105.50	$535.76	$221.10
27758	T	Treatment of tibia fracture	0046	22.29	$1,105.50	$535.76	$221.10
27759	T	Treatment of tibia fracture	0046	22.29	$1,105.50	$535.76	$221.10
27760	T	Treatment of ankle fracture	0044	2.17	$107.63	$38.08	$21.53
27762	T	Treatment of ankle fracture	0044	2.17	$107.63	$38.08	$21.53
27766	T	Treatment of ankle fracture	0046	22.29	$1,105.50	$535.76	$221.10
27780	T	Treatment of fibula fracture	0044	2.17	$107.63	$38.08	$21.53
27781	T	Treatment of fibula fracture	0044	2.17	$107.63	$38.08	$21.53
27784	T	Treatment of fibula fracture	0046	22.29	$1,105.50	$535.76	$221.10
27786	T	Treatment of ankle fracture	0044	2.17	$107.63	$38.08	$21.53
27788	T	Treatment of ankle fracture	0044	2.17	$107.63	$38.08	$21.53
27792	T	Treatment of ankle fracture	0046	22.29	$1,105.50	$535.76	$221.10
27808	T	Treatment of ankle fracture	0044	2.17	$107.63	$38.08	$21.53
27810	T	Treatment of ankle fracture	0044	2.17	$107.63	$38.08	$21.53
27814	T	Treatment of ankle fracture	0046	22.29	$1,105.50	$535.76	$221.10
27816	T	Treatment of ankle fracture	0044	2.17	$107.63	$38.08	$21.53
27818	T	Treatment of ankle fracture	0044	2.17	$107.63	$38.08	$21.53
27822	T	Treatment of ankle fracture	0046	22.29	$1,105.50	$535.76	$221.10
27823	T	Treatment of ankle fracture	0046	22.29	$1,105.50	$535.76	$221.10
27824	T	Treat lower leg fracture	0044	2.17	$107.63	$38.08	$21.53
27825	T	Treat lower leg fracture	0044	2.17	$107.63	$38.08	$21.53
27826	T	Treat lower leg fracture	0046	22.29	$1,105.50	$535.76	$221.10
27827	T	Treat lower leg fracture	0046	22.29	$1,105.50	$535.76	$221.10
27828	T	Treat lower leg fracture	0046	22.29	$1,105.50	$535.76	$221.10
27829	T	Treat lower leg joint	0046	22.29	$1,105.50	$535.76	$221.10
27830	T	Treat lower leg dislocation	0044	2.17	$107.63	$38.08	$21.53
27831	T	Treat lower leg dislocation	0045	11.02	$546.55	$277.12	$109.31
27832	T	Treat lower leg dislocation	0046	22.29	$1,105.50	$535.76	$221.10
27840	T	Treat ankle dislocation	0044	2.17	$107.63	$38.08	$21.53
27842	T	Treat ankle dislocation	0045	11.02	$546.55	$277.12	$109.31
27846	T	Treat ankle dislocation	0046	22.29	$1,105.50	$535.76	$221.10
27848	T	Treat ankle dislocation	0046	22.29	$1,105.50	$535.76	$221.10
27860	T	Fixation of ankle joint	0045	11.02	$546.55	$277.12	$109.31
27870	T	Fusion of ankle joint	0051	27.76	$1,376.79	$675.24	$275.36
27871	T	Fusion of tibiofibular joint	0051	27.76	$1,376.79	$675.24	$275.36
27880	C	Amputation of lower leg					

CPT codes and descriptions only are copyright American Medical Association. All Rights Reserved. Applicable FARS/DFARS Apply.
Copyright American Dental Association. All rights reserved.
*Code is new in 2001.

ADDENDUM B.—HOSPITAL OUTPATIENT DEPARTMENT (HOPD) PAYMENT STATUS BY HCPCS CODE AND RELATED INFORMATION—Continued

CPT/ HCPCS	HOPD Status Indicator	Description	APC	Relative Weight	Payment Rate	National Unadjusted Coinsurance	Minimum Unadjusted Coinsurance
27881	C	Amputation of lower leg					
27882	C	Amputation of lower leg					
27884	T	Amputation follow-up surgery	0049	15.04	$745.93	$356.95	$149.19
27886	C	Amputation follow-up surgery					
27888	C	Amputation of foot at ankle					
27889	T	Amputation of foot at ankle	0050	21.13	$1,047.96	$513.86	$209.59
27892	T	Decompression of leg	0049	15.04	$745.93	$356.95	$149.19
27893	T	Decompression of leg	0049	15.04	$745.93	$356.95	$149.19
27894	T	Decompression of leg	0049	15.04	$745.93	$356.95	$149.19
27899	T	Leg/ankle surgery procedure	0044	2.17	$107.63	$38.08	$21.53
28001	T	Drainage of bursa of foot	0008	6.15	$305.02	$113.67	$61.00
28002	T	Treatment of foot infection	0049	15.04	$745.93	$356.95	$149.19
28003	T	Treatment of foot infection	0049	15.04	$745.93	$356.95	$149.19
28005	T	Treat foot bone lesion	0055	15.47	$767.26	$355.34	$153.45
28008	T	Incision of foot fascia	0055	15.47	$767.26	$355.34	$153.45
28010	T	Incision of toe tendon	0055	15.47	$767.26	$355.34	$153.45
28011	T	Incision of toe tendons	0055	15.47	$767.26	$355.34	$153.45
28020	T	Exploration of foot joint	0055	15.47	$767.26	$355.34	$153.45
28022	T	Exploration of foot joint	0055	15.47	$767.26	$355.34	$153.45
28024	T	Exploration of toe joint	0055	15.47	$767.26	$355.34	$153.45
28030	T	Removal of foot nerve	0220	13.96	$692.36	$326.21	$138.47
28035	T	Decompression of tibia nerve	0220	13.96	$692.36	$326.21	$138.47
28043	T	Excision of foot lesion	0021	10.49	$520.26	$236.51	$104.05
28045	T	Excision of foot lesion	0055	15.47	$767.26	$355.34	$153.45
28046	T	Resection of tumor, foot	0055	15.47	$767.26	$355.34	$153.45
28050	T	Biopsy of foot joint lining	0055	15.47	$767.26	$355.34	$153.45
28052	T	Biopsy of foot joint lining	0055	15.47	$767.26	$355.34	$153.45
28054	T	Biopsy of toe joint lining	0055	15.47	$767.26	$355.34	$153.45
28060	T	Partial removal, foot fascia	0056	17.30	$858.02	$405.81	$171.60
28062	T	Removal of foot fascia	0056	17.30	$858.02	$405.81	$171.60
28070	T	Removal of foot joint lining	0056	17.30	$858.02	$405.81	$171.60
28072	T	Removal of foot joint lining	0056	17.30	$858.02	$405.81	$171.60
28080	T	Removal of foot lesion	0055	15.47	$767.26	$355.34	$153.45
28086	T	Excise foot tendon sheath	0055	15.47	$767.26	$355.34	$153.45
28088	T	Excise foot tendon sheath	0055	15.47	$767.26	$355.34	$153.45
28090	T	Removal of foot lesion	0055	15.47	$767.26	$355.34	$153.45
28092	T	Removal of toe lesions	0055	15.47	$767.26	$355.34	$153.45
28100	T	Removal of ankle/heel lesion	0055	15.47	$767.26	$355.34	$153.45
28102	T	Remove/graft foot lesion	0056	17.30	$858.02	$405.81	$171.60
28103	T	Remove/graft foot lesion	0056	17.30	$858.02	$405.81	$171.60
28104	T	Removal of foot lesion	0055	15.47	$767.26	$355.34	$153.45
28106	T	Remove/graft foot lesion	0056	17.30	$858.02	$405.81	$171.60
28107	T	Remove/graft foot lesion	0056	17.30	$858.02	$405.81	$171.60
28108	T	Removal of toe lesions	0055	15.47	$767.26	$355.34	$153.45
28110	T	Part removal of metatarsal	0057	21.00	$1,041.52	$496.65	$208.30
28111	T	Part removal of metatarsal	0055	15.47	$767.26	$355.34	$153.45
28112	T	Part removal of metatarsal	0055	15.47	$767.26	$355.34	$153.45
28113	T	Part removal of metatarsal	0055	15.47	$767.26	$355.34	$153.45
28114	T	Removal of metatarsal heads	0055	15.47	$767.26	$355.34	$153.45
28116	T	Revision of foot	0055	15.47	$767.26	$355.34	$153.45
28118	T	Removal of heel bone	0055	15.47	$767.26	$355.34	$153.45
28119	T	Removal of heel spur	0055	15.47	$767.26	$355.34	$153.45
28120	T	Part removal of ankle/heel	0055	15.47	$767.26	$355.34	$153.45
28122	T	Partial removal of foot bone	0055	15.47	$767.26	$355.34	$153.45
28124	T	Partial removal of toe	0055	15.47	$767.26	$355.34	$153.45
28126	T	Partial removal of toe	0055	15.47	$767.26	$355.34	$153.45
28130	T	Removal of ankle bone	0055	15.47	$767.26	$355.34	$153.45
28140	T	Removal of metatarsal	0055	15.47	$767.26	$355.34	$153.45
28150	T	Removal of toe	0055	15.47	$767.26	$355.34	$153.45
28153	T	Partial removal of toe	0055	15.47	$767.26	$355.34	$153.45
28160	T	Partial removal of toe	0055	15.47	$767.26	$355.34	$153.45
28171	T	Extensive foot surgery	0055	15.47	$767.26	$355.34	$153.45
28173	T	Extensive foot surgery	0055	15.47	$767.26	$355.34	$153.45
28175	T	Extensive foot surgery	0055	15.47	$767.26	$355.34	$153.45
28190	T	Removal of foot foreign body	0019	4.00	$198.39	$78.91	$39.68
28192	T	Removal of foot foreign body	0021	10.49	$520.26	$236.51	$104.05
28193	T	Removal of foot foreign body	0020	6.51	$322.87	$130.53	$64.57
28200	T	Repair of foot tendon	0055	15.47	$767.26	$355.34	$153.45
28202	T	Repair/graft of foot tendon	0056	17.30	$858.02	$405.81	$171.60
28208	T	Repair of foot tendon	0055	15.47	$767.26	$355.34	$153.45
28210	T	Repair/graft of foot tendon	0055	15.47	$767.26	$355.34	$153.45
28220	T	Release of foot tendon	0055	15.47	$767.26	$355.34	$153.45
28222	T	Release of foot tendons	0055	15.47	$767.26	$355.34	$153.45
28225	T	Release of foot tendon	0055	15.47	$767.26	$355.34	$153.45

CPT codes and descriptions only are copyright American Medical Association. All Rights Reserved. Applicable FARS/DFARS Apply.
Copyright American Dental Association. All rights reserved.
*Code is new in 2001.

ADDENDUM B.—HOSPITAL OUTPATIENT DEPARTMENT (HOPD) PAYMENT STATUS BY HCPCS CODE AND RELATED INFORMATION—Continued

CPT/ HCPCS	HOPD Status Indicator	Description	APC	Relative Weight	Payment Rate	National Unadjusted Coinsurance	Minimum Unadjusted Coinsurance
28226	T	Release of foot tendons	0055	15.47	$767.26	$355.34	$153.45
28230	T	Incision of foot tendon(s)	0055	15.47	$767.26	$355.34	$153.45
28232	T	Incision of toe tendon	0055	15.47	$767.26	$355.34	$153.45
28234	T	Incision of foot tendon	0055	15.47	$767.26	$355.34	$153.45
28238	T	Revision of foot tendon	0056	17.30	$858.02	$405.81	$171.60
28240	T	Release of big toe	0055	15.47	$767.26	$355.34	$153.45
28250	T	Revision of foot fascia	0056	17.30	$858.02	$405.81	$171.60
28260	T	Release of midfoot joint	0056	17.30	$858.02	$405.81	$171.60
28261	T	Revision of foot tendon	0056	17.30	$858.02	$405.81	$171.60
28262	T	Revision of foot and ankle	0056	17.30	$858.02	$405.81	$171.60
28264	T	Release of midfoot joint	0056	17.30	$858.02	$405.81	$171.60
28270	T	Release of foot contracture	0055	15.47	$767.26	$355.34	$153.45
28272	T	Release of toe joint, each	0055	15.47	$767.26	$355.34	$153.45
28280	T	Fusion of toes	0055	15.47	$767.26	$355.34	$153.45
28285	T	Repair of hammertoe	0055	15.47	$767.26	$355.34	$153.45
28286	T	Repair of hammertoe	0055	15.47	$767.26	$355.34	$153.45
28288	T	Partial removal of foot bone	0056	17.30	$858.02	$405.81	$171.60
28289	T	Repair hallux rigidus	0056	17.30	$858.02	$405.81	$171.60
28290	T	Correction of bunion	0057	21.00	$1,041.52	$496.65	$208.30
28292	T	Correction of bunion	0057	21.00	$1,041.52	$496.65	$208.30
28293	T	Correction of bunion	0057	21.00	$1,041.52	$496.65	$208.30
28294	T	Correction of bunion	0057	21.00	$1,041.52	$496.65	$208.30
28296	T	Correction of bunion	0057	21.00	$1,041.52	$496.65	$208.30
28297	T	Correction of bunion	0057	21.00	$1,041.52	$496.65	$208.30
28298	T	Correction of bunion	0057	21.00	$1,041.52	$496.65	$208.30
28299	T	Correction of bunion	0057	21.00	$1,041.52	$496.65	$208.30
28300	T	Incision of heel bone	0056	17.30	$858.02	$405.81	$171.60
28302	T	Incision of ankle bone	0056	17.30	$858.02	$405.81	$171.60
28304	T	Incision of midfoot bones	0056	17.30	$858.02	$405.81	$171.60
28305	T	Incise/graft midfoot bones	0056	17.30	$858.02	$405.81	$171.60
28306	T	Incision of metatarsal	0056	17.30	$858.02	$405.81	$171.60
28307	T	Incision of metatarsal	0056	17.30	$858.02	$405.81	$171.60
28308	T	Incision of metatarsal	0056	17.30	$858.02	$405.81	$171.60
28309	T	Incision of metatarsals	0056	17.30	$858.02	$405.81	$171.60
28310	T	Revision of big toe	0055	15.47	$767.26	$355.34	$153.45
28312	T	Revision of toe	0055	15.47	$767.26	$355.34	$153.45
28313	T	Repair deformity of toe	0055	15.47	$767.26	$355.34	$153.45
28315	T	Removal of sesamoid bone	0055	15.47	$767.26	$355.34	$153.45
28320	T	Repair of foot bones	0056	17.30	$858.02	$405.81	$171.60
28322	T	Repair of metatarsals	0056	17.30	$858.02	$405.81	$171.60
28340	T	Resect enlarged toe tissue	0055	15.47	$767.26	$355.34	$153.45
28341	T	Resect enlarged toe	0055	15.47	$767.26	$355.34	$153.45
28344	T	Repair extra toe(s)	0056	17.30	$858.02	$405.81	$171.60
28345	T	Repair webbed toe(s)	0056	17.30	$858.02	$405.81	$171.60
28360	T	Reconstruct cleft foot	0056	17.30	$858.02	$405.81	$171.60
28400	T	Treatment of heel fracture	0044	2.17	$107.63	$38.08	$21.53
28405	T	Treatment of heel fracture	0044	2.17	$107.63	$38.08	$21.53
28406	T	Treatment of heel fracture	0046	22.29	$1,105.50	$535.76	$221.10
28415	T	Treat heel fracture	0046	22.29	$1,105.50	$535.76	$221.10
28420	T	Treat/graft heel fracture	0046	22.29	$1,105.50	$535.76	$221.10
28430	T	Treatment of ankle fracture	0044	2.17	$107.63	$38.08	$21.53
28435	T	Treatment of ankle fracture	0044	2.17	$107.63	$38.08	$21.53
28436	T	Treatment of ankle fracture	0046	22.29	$1,105.50	$535.76	$221.10
28445	T	Treat ankle fracture	0046	22.29	$1,105.50	$535.76	$221.10
28450	T	Treat midfoot fracture, each	0044	2.17	$107.63	$38.08	$21.53
28455	T	Treat midfoot fracture, each	0044	2.17	$107.63	$38.08	$21.53
28456	T	Treat midfoot fracture	0046	22.29	$1,105.50	$535.76	$221.10
28465	T	Treat midfoot fracture, each	0046	22.29	$1,105.50	$535.76	$221.10
28470	T	Treat metatarsal fracture	0044	2.17	$107.63	$38.08	$21.53
28475	T	Treat metatarsal fracture	0044	2.17	$107.63	$38.08	$21.53
28476	T	Treat metatarsal fracture	0046	22.29	$1,105.50	$535.76	$221.10
28485	T	Treat metatarsal fracture	0046	22.29	$1,105.50	$535.76	$221.10
28490	T	Treat big toe fracture	0043	1.64	$81.34	$25.46	$16.27
28495	T	Treat big toe fracture	0043	1.64	$81.34	$25.46	$16.27
28496	T	Treat big toe fracture	0046	22.29	$1,105.50	$535.76	$221.10
28505	T	Treat big toe fracture	0046	22.29	$1,105.50	$535.76	$221.10
28510	T	Treatment of toe fracture	0043	1.64	$81.34	$25.46	$16.27
28515	T	Treatment of toe fracture	0043	1.64	$81.34	$25.46	$16.27
28525	T	Treat toe fracture	0046	22.29	$1,105.50	$535.76	$221.10
28530	T	Treat sesamoid bone fracture	0044	2.17	$107.63	$38.08	$21.53
28531	T	Treat sesamoid bone fracture	0046	22.29	$1,105.50	$535.76	$221.10
28540	T	Treat foot dislocation	0044	2.17	$107.63	$38.08	$21.53
28545	T	Treat foot dislocation	0045	11.02	$546.55	$277.12	$109.31
28546	T	Treat foot dislocation	0046	22.29	$1,105.50	$535.76	$221.10

CPT codes and descriptions only are copyright American Medical Association. All Rights Reserved. Applicable FARS/DFARS Apply.
Copyright American Dental Association. All rights reserved.
*Code is new in 2001.

ADDENDUM B.—HOSPITAL OUTPATIENT DEPARTMENT (HOPD) PAYMENT STATUS BY HCPCS CODE AND RELATED INFORMATION—Continued

CPT/ HCPCS	HOPD Status Indicator	Description	APC	Relative Weight	Payment Rate	National Unadjusted Coinsurance	Minimum Unadjusted Coinsurance
28555	T	Repair foot dislocation	0046	22.29	$1,105.50	$535.76	$221.10
28570	T	Treat foot dislocation	0044	2.17	$107.63	$38.08	$21.53
28575	T	Treat foot dislocation	0045	11.02	$546.55	$277.12	$109.31
28576	T	Treat foot dislocation	0046	22.29	$1,105.50	$535.76	$221.10
28585	T	Repair foot dislocation	0046	22.29	$1,105.50	$535.76	$221.10
28600	T	Treat foot dislocation	0044	2.17	$107.63	$38.08	$21.53
28605	T	Treat foot dislocation	0045	11.02	$546.55	$277.12	$109.31
28606	T	Treat foot dislocation	0046	22.29	$1,105.50	$535.76	$221.10
28615	T	Repair foot dislocation	0046	22.29	$1,105.50	$535.76	$221.10
28630	T	Treat toe dislocation	0043	1.64	$81.34	$25.46	$16.27
28635	T	Treat toe dislocation	0045	11.02	$546.55	$277.12	$109.31
28636	T	Treat toe dislocation	0046	22.29	$1,105.50	$535.76	$221.10
28645	T	Repair toe dislocation	0046	22.29	$1,105.50	$535.76	$221.10
28660	T	Treat toe dislocation	0043	1.64	$81.34	$25.46	$16.27
28665	T	Treat toe dislocation	0045	11.02	$546.55	$277.12	$109.31
28666	T	Treat toe dislocation	0046	22.29	$1,105.50	$535.76	$221.10
28675	T	Repair of toe dislocation	0046	22.29	$1,105.50	$535.76	$221.10
28705	T	Fusion of foot bones	0056	17.30	$858.02	$405.81	$171.60
28715	T	Fusion of foot bones	0056	17.30	$858.02	$405.81	$171.60
28725	T	Fusion of foot bones	0056	17.30	$858.02	$405.81	$171.60
28730	T	Fusion of foot bones	0056	17.30	$858.02	$405.81	$171.60
28735	T	Fusion of foot bones	0056	17.30	$858.02	$405.81	$171.60
28737	T	Revision of foot bones	0055	15.47	$767.26	$355.34	$153.45
28740	T	Fusion of foot bones	0056	17.30	$858.02	$405.81	$171.60
28750	T	Fusion of big toe joint	0055	15.47	$767.26	$355.34	$153.45
28755	T	Fusion of big toe joint	0055	15.47	$767.26	$355.34	$153.45
28760	T	Fusion of big toe joint	0056	17.30	$858.02	$405.81	$171.60
28800	C	Amputation of midfoot					
28805	C	Amputation thru metatarsal					
28810	T	Amputation toe & metatarsal	0055	15.47	$767.26	$355.34	$153.45
28820	T	Amputation of toe	0055	15.47	$767.26	$355.34	$153.45
28825	T	Partial amputation of toe	0055	15.47	$767.26	$355.34	$153.45
28899	T	Foot/toes surgery procedure	0043	1.64	$81.34	$25.46	$16.27
29000	S	Application of body cast	0059	1.74	$86.30	$29.59	$17.26
29010	S	Application of body cast	0059	1.74	$86.30	$29.59	$17.26
29015	S	Application of body cast	0059	1.74	$86.30	$29.59	$17.26
29020	S	Application of body cast	0059	1.74	$86.30	$29.59	$17.26
29025	S	Application of body cast	0059	1.74	$86.30	$29.59	$17.26
29035	S	Application of body cast	0059	1.74	$86.30	$29.59	$17.26
29040	S	Application of body cast	0059	1.74	$86.30	$29.59	$17.26
29044	S	Application of body cast	0059	1.74	$86.30	$29.59	$17.26
29046	S	Application of body cast	0059	1.74	$86.30	$29.59	$17.26
29049	S	Application of figure eight	0059	1.74	$86.30	$29.59	$17.26
29055	S	Application of shoulder cast	0059	1.74	$86.30	$29.59	$17.26
29058	S	Application of shoulder cast	0059	1.74	$86.30	$29.59	$17.26
29065	S	Application of long arm cast	0059	1.74	$86.30	$29.59	$17.26
29075	S	Application of forearm cast	0059	1.74	$86.30	$29.59	$17.26
29085	S	Apply hand/wrist cast	0059	1.74	$86.30	$29.59	$17.26
29105	S	Apply long arm splint	0059	1.74	$86.30	$29.59	$17.26
29125	S	Apply forearm splint	0059	1.74	$86.30	$29.59	$17.26
29126	S	Apply forearm splint	0059	1.74	$86.30	$29.59	$17.26
29130	S	Application of finger splint	0059	1.74	$86.30	$29.59	$17.26
29131	S	Application of finger splint	0059	1.74	$86.30	$29.59	$17.26
29200	S	Strapping of chest	0059	1.74	$86.30	$29.59	$17.26
29220	S	Strapping of low back	0059	1.74	$86.30	$29.59	$17.26
29240	S	Strapping of shoulder	0059	1.74	$86.30	$29.59	$17.26
29260	S	Strapping of elbow or wrist	0059	1.74	$86.30	$29.59	$17.26
29280	S	Strapping of hand or finger	0059	1.74	$86.30	$29.59	$17.26
29305	S	Application of hip cast	0059	1.74	$86.30	$29.59	$17.26
29325	S	Application of hip casts	0059	1.74	$86.30	$29.59	$17.26
29345	S	Application of long leg cast	0059	1.74	$86.30	$29.59	$17.26
29355	S	Application of long leg cast	0059	1.74	$86.30	$29.59	$17.26
29358	S	Apply long leg cast brace	0059	1.74	$86.30	$29.59	$17.26
29365	S	Application of long leg cast	0059	1.74	$86.30	$29.59	$17.26
29405	S	Apply short leg cast	0059	1.74	$86.30	$29.59	$17.26
29425	S	Apply short leg cast	0059	1.74	$86.30	$29.59	$17.26
29435	S	Apply short leg cast	0059	1.74	$86.30	$29.59	$17.26
29440	S	Addition of walker to cast	0059	1.74	$86.30	$29.59	$17.26
29445	S	Apply rigid leg cast	0059	1.74	$86.30	$29.59	$17.26
29450	S	Application of leg cast	0059	1.74	$86.30	$29.59	$17.26
29505	S	Application, long leg splint	0058	1.09	$54.06	$19.27	$10.81
29515	S	Application lower leg splint	0058	1.09	$54.06	$19.27	$10.81
29520	S	Strapping of hip	0058	1.09	$54.06	$19.27	$10.81
29530	S	Strapping of knee	0058	1.09	$54.06	$19.27	$10.81

CPT codes and descriptions only are copyright American Medical Association. All Rights Reserved. Applicable FARS/DFARS Apply.
Copyright American Dental Association. All rights reserved.
*Code is new in 2001.

ADDENDUM B.—HOSPITAL OUTPATIENT DEPARTMENT (HOPD) PAYMENT STATUS BY HCPCS CODE AND RELATED INFORMATION—Continued

CPT/ HCPCS	HOPD Status Indicator	Description	APC	Relative Weight	Payment Rate	National Unadjusted Coinsurance	Minimum Unadjusted Coinsurance
29540	S	Strapping of ankle	0058	1.09	$54.06	$19.27	$10.81
29550	S	Strapping of toes	0058	1.09	$54.06	$19.27	$10.81
29580	S	Application of paste boot	0058	1.09	$54.06	$19.27	$10.81
29590	S	Application of foot splint	0058	1.09	$54.06	$19.27	$10.81
29700	S	Removal/revision of cast	0058	1.09	$54.06	$19.27	$10.81
29705	S	Removal/revision of cast	0058	1.09	$54.06	$19.27	$10.81
29710	S	Removal/revision of cast	0058	1.09	$54.06	$19.27	$10.81
29715	S	Removal/revision of cast	0058	1.09	$54.06	$19.27	$10.81
29720	S	Repair of body cast	0058	1.09	$54.06	$19.27	$10.81
29730	S	Windowing of cast	0058	1.09	$54.06	$19.27	$10.81
29740	S	Wedging of cast	0058	1.09	$54.06	$19.27	$10.81
29750	S	Wedging of clubfoot cast	0058	1.09	$54.06	$19.27	$10.81
29799	S	Casting/strapping procedure	0058	1.09	$54.06	$19.27	$10.81
29800	T	Jaw arthroscopy/surgery	0041	24.57	$1,218.58	$592.08	$243.72
29804	T	Jaw arthroscopy/surgery	0041	24.57	$1,218.58	$592.08	$243.72
29815	T	Shoulder arthroscopy	0041	24.57	$1,218.58	$592.08	$243.72
29819	T	Shoulder arthroscopy/surgery	0041	24.57	$1,218.58	$592.08	$243.72
29820	T	Shoulder arthroscopy/surgery	0041	24.57	$1,218.58	$592.08	$243.72
29821	T	Shoulder arthroscopy/surgery	0041	24.57	$1,218.58	$592.08	$243.72
29822	T	Shoulder arthroscopy/surgery	0041	24.57	$1,218.58	$592.08	$243.72
29823	T	Shoulder arthroscopy/surgery	0041	24.57	$1,218.58	$592.08	$243.72
29825	T	Shoulder arthroscopy/surgery	0041	24.57	$1,218.58	$592.08	$243.72
29826	T	Shoulder arthroscopy/surgery	0041	24.57	$1,218.58	$592.08	$243.72
29830	T	Elbow arthroscopy	0041	24.57	$1,218.58	$592.08	$243.72
29834	T	Elbow arthroscopy/surgery	0041	24.57	$1,218.58	$592.08	$243.72
29835	T	Elbow arthroscopy/surgery	0041	24.57	$1,218.58	$592.08	$243.72
29836	T	Elbow arthroscopy/surgery	0041	24.57	$1,218.58	$592.08	$243.72
29837	T	Elbow arthroscopy/surgery	0041	24.57	$1,218.58	$592.08	$243.72
29838	T	Elbow arthroscopy/surgery	0041	24.57	$1,218.58	$592.08	$243.72
29840	T	Wrist arthroscopy	0041	24.57	$1,218.58	$592.08	$243.72
29843	T	Wrist arthroscopy/surgery	0041	24.57	$1,218.58	$592.08	$243.72
29844	T	Wrist arthroscopy/surgery	0041	24.57	$1,218.58	$592.08	$243.72
29845	T	Wrist arthroscopy/surgery	0041	24.57	$1,218.58	$592.08	$243.72
29846	T	Wrist arthroscopy/surgery	0041	24.57	$1,218.58	$592.08	$243.72
29847	T	Wrist arthroscopy/surgery	0041	24.57	$1,218.58	$592.08	$243.72
29848	T	Wrist endoscopy/surgery	0041	24.57	$1,218.58	$592.08	$243.72
29850	T	Knee arthroscopy/surgery	0042	29.22	$1,449.19	$804.74	$289.84
29851	T	Knee arthroscopy/surgery	0042	29.22	$1,449.19	$804.74	$289.84
29855	T	Tibial arthroscopy/surgery	0042	29.22	$1,449.19	$804.74	$289.84
29856	T	Tibial arthroscopy/surgery	0042	29.22	$1,449.19	$804.74	$289.84
29860	T	Hip arthroscopy, dx	0041	24.57	$1,218.58	$592.08	$243.72
29861	T	Hip arthroscopy/surgery	0041	24.57	$1,218.58	$592.08	$243.72
29862	T	Hip arthroscopy/surgery	0041	24.57	$1,218.58	$592.08	$243.72
29863	T	Hip arthroscopy/surgery	0041	24.57	$1,218.58	$592.08	$243.72
29870	T	Knee arthroscopy, dx	0041	24.57	$1,218.58	$592.08	$243.72
29871	T	Knee arthroscopy/drainage	0041	24.57	$1,218.58	$592.08	$243.72
29874	T	Knee arthroscopy/surgery	0041	24.57	$1,218.58	$592.08	$243.72
29875	T	Knee arthroscopy/surgery	0041	24.57	$1,218.58	$592.08	$243.72
29876	T	Knee arthroscopy/surgery	0041	24.57	$1,218.58	$592.08	$243.72
29877	T	Knee arthroscopy/surgery	0041	24.57	$1,218.58	$592.08	$243.72
29879	T	Knee arthroscopy/surgery	0041	24.57	$1,218.58	$592.08	$243.72
29880	T	Knee arthroscopy/surgery	0041	24.57	$1,218.58	$592.08	$243.72
29881	T	Knee arthroscopy/surgery	0041	24.57	$1,218.58	$592.08	$243.72
29882	T	Knee arthroscopy/surgery	0041	24.57	$1,218.58	$592.08	$243.72
29883	T	Knee arthroscopy/surgery	0041	24.57	$1,218.58	$592.08	$243.72
29884	T	Knee arthroscopy/surgery	0041	24.57	$1,218.58	$592.08	$243.72
29885	T	Knee arthroscopy/surgery	0042	29.22	$1,449.19	$804.74	$289.84
29886	T	Knee arthroscopy/surgery	0041	24.57	$1,218.58	$592.08	$243.72
29887	T	Knee arthroscopy/surgery	0041	24.57	$1,218.58	$592.08	$243.72
29888	T	Knee arthroscopy/surgery	0042	29.22	$1,449.19	$804.74	$289.84
29889	T	Knee arthroscopy/surgery	0042	29.22	$1,449.19	$804.74	$289.84
29891	T	Ankle arthroscopy/surgery	0041	24.57	$1,218.58	$592.08	$243.72
29892	T	Ankle arthroscopy/surgery	0042	29.22	$1,449.19	$804.74	$289.84
29893	T	Scope, plantar fasciotomy	0055	15.47	$767.26	$355.34	$153.45
29894	T	Ankle arthroscopy/surgery	0041	24.57	$1,218.58	$592.08	$243.72
29895	T	Ankle arthroscopy/surgery	0041	24.57	$1,218.58	$592.08	$243.72
29897	T	Ankle arthroscopy/surgery	0041	24.57	$1,218.58	$592.08	$243.72
29898	T	Ankle arthroscopy/surgery	0041	24.57	$1,218.58	$592.08	$243.72
29909	T	Arthroscopy of joint	0041	24.57	$1,218.58	$592.08	$243.72
30000	T	Drainage of nose lesion	0251	1.68	$83.32	$27.99	$16.66
30020	T	Drainage of nose lesion	0251	1.68	$83.32	$27.99	$16.66
30100	T	Intranasal biopsy	0252	5.18	$256.90	$114.24	$51.38
30110	T	Removal of nose polyp(s)	0253	12.02	$596.14	$284.00	$119.23
30115	T	Removal of nose polyp(s)	0253	12.02	$596.14	$284.00	$119.23

CPT codes and descriptions only are copyright American Medical Association. All Rights Reserved. Applicable FARS/DFARS Apply.
Copyright American Dental Association. All rights reserved.
*Code is new in 2001.

ADDENDUM B.—HOSPITAL OUTPATIENT DEPARTMENT (HOPD) PAYMENT STATUS BY HCPCS CODE AND RELATED INFORMATION—Continued

CPT/ HCPCS	HOPD Status Indicator	Description	APC	Relative Weight	Payment Rate	National Unadjusted Coinsurance	Minimum Unadjusted Coinsurance
30117	T	Removal of intranasal lesion	0253	12.02	$596.14	$284.00	$119.23
30118	T	Removal of intranasal lesion	0254	12.45	$617.47	$272.41	$123.49
30120	T	Revision of nose	0253	12.02	$596.14	$284.00	$119.23
30124	T	Removal of nose lesion	0252	5.18	$256.90	$114.24	$51.38
30125	T	Removal of nose lesion	0256	25.40	$1,259.74	$623.05	$251.95
30130	T	Removal of turbinate bones	0253	12.02	$596.14	$284.00	$119.23
30140	T	Removal of turbinate bones	0253	12.02	$596.14	$284.00	$119.23
30150	T	Partial removal of nose	0256	25.40	$1,259.74	$623.05	$251.95
30160	T	Removal of nose	0256	25.40	$1,259.74	$623.05	$251.95
30200	T	Injection treatment of nose	0253	12.02	$596.14	$284.00	$119.23
30210	T	Nasal sinus therapy	0252	5.18	$256.90	$114.24	$51.38
30220	T	Insert nasal septal button	0252	5.18	$256.90	$114.24	$51.38
30300	T	Remove nasal foreign body	0251	1.68	$83.32	$27.99	$16.66
30310	T	Remove nasal foreign body	0253	12.02	$596.14	$284.00	$119.23
30320	T	Remove nasal foreign body	0253	12.02	$596.14	$284.00	$119.23
30400	T	Reconstruction of nose	0256	25.40	$1,259.74	$623.05	$251.95
30410	T	Reconstruction of nose	0256	25.40	$1,259.74	$623.05	$251.95
30420	T	Reconstruction of nose	0256	25.40	$1,259.74	$623.05	$251.95
30430	T	Revision of nose	0254	12.45	$617.47	$272.41	$123.49
30435	T	Revision of nose	0256	25.40	$1,259.74	$623.05	$251.95
30450	T	Revision of nose	0256	25.40	$1,259.74	$623.05	$251.95
30460	T	Revision of nose	0256	25.40	$1,259.74	$623.05	$251.95
30462	T	Revision of nose	0256	25.40	$1,259.74	$623.05	$251.95
*30465	T	Repair nasal stenosis	0256	25.40	$1,259.74	$623.05	$251.95
30520	T	Repair of nasal septum	0256	25.40	$1,259.74	$623.05	$251.95
30540	T	Repair nasal defect	0256	25.40	$1,259.74	$623.05	$251.95
30545	T	Repair nasal defect	0256	25.40	$1,259.74	$623.05	$251.95
30560	T	Release of nasal adhesions	0251	1.68	$83.32	$27.99	$16.66
30580	T	Repair upper jaw fistula	0256	25.40	$1,259.74	$623.05	$251.95
30600	T	Repair mouth/nose fistula	0256	25.40	$1,259.74	$623.05	$251.95
30620	T	Intranasal reconstruction	0256	25.40	$1,259.74	$623.05	$251.95
30630	T	Repair nasal septum defect	0254	12.45	$617.47	$272.41	$123.49
30801	T	Cauterization, inner nose	0252	5.18	$256.90	$114.24	$51.38
30802	T	Cauterization, inner nose	0253	12.02	$596.14	$284.00	$119.23
30901	T	Control of nosebleed	0250	2.21	$109.61	$38.54	$21.92
30903	T	Control of nosebleed	0250	2.21	$109.61	$38.54	$21.92
30905	T	Control of nosebleed	0250	2.21	$109.61	$38.54	$21.92
30906	T	Repeat control of nosebleed	0250	2.21	$109.61	$38.54	$21.92
30915	T	Ligation, nasal sinus artery	0091	14.79	$733.52	$348.23	$146.70
30920	T	Ligation, upper jaw artery	0092	20.21	$1,002.34	$505.37	$200.47
30930	T	Therapy, fracture of nose	0253	12.02	$596.14	$284.00	$119.23
30999	T	Nasal surgery procedure	0251	1.68	$83.32	$27.99	$16.66
31000	T	Irrigation, maxillary sinus	0251	1.68	$83.32	$27.99	$16.66
31002	T	Irrigation, sphenoid sinus	0252	5.18	$256.90	$114.24	$51.38
31020	T	Exploration, maxillary sinus	0253	12.02	$596.14	$284.00	$119.23
31030	T	Exploration, maxillary sinus	0256	25.40	$1,259.74	$623.05	$251.95
31032	T	Explore sinus,remove polyps	0256	25.40	$1,259.74	$623.05	$251.95
31040	T	Exploration behind upper jaw	0254	12.45	$617.47	$272.41	$123.49
31050	T	Exploration, sphenoid sinus	0256	25.40	$1,259.74	$623.05	$251.95
31051	T	Sphenoid sinus surgery	0256	25.40	$1,259.74	$623.05	$251.95
31070	T	Exploration of frontal sinus	0254	12.45	$617.47	$272.41	$123.49
31075	T	Exploration of frontal sinus	0256	25.40	$1,259.74	$623.05	$251.95
31080	T	Removal of frontal sinus	0256	25.40	$1,259.74	$623.05	$251.95
31081	T	Removal of frontal sinus	0256	25.40	$1,259.74	$623.05	$251.95
31084	T	Removal of frontal sinus	0256	25.40	$1,259.74	$623.05	$251.95
31085	T	Removal of frontal sinus	0256	25.40	$1,259.74	$623.05	$251.95
31086	T	Removal of frontal sinus	0256	25.40	$1,259.74	$623.05	$251.95
31087	T	Removal of frontal sinus	0256	25.40	$1,259.74	$623.05	$251.95
31090	T	Exploration of sinuses	0256	25.40	$1,259.74	$623.05	$251.95
31200	T	Removal of ethmoid sinus	0256	25.40	$1,259.74	$623.05	$251.95
31201	T	Removal of ethmoid sinus	0256	25.40	$1,259.74	$623.05	$251.95
31205	T	Removal of ethmoid sinus	0256	25.40	$1,259.74	$623.05	$251.95
31225	C	Removal of upper jaw					
31230	C	Removal of upper jaw					
31231	T	Nasal endoscopy, dx	0071	0.55	$27.28	$14.22	$5.46
31233	T	Nasal/sinus endoscopy, dx	0072	1.26	$62.49	$41.52	$12.50
31235	T	Nasal/sinus endoscopy, dx	0074	13.61	$675.00	$347.54	$135.00
31237	T	Nasal/sinus endoscopy, surg	0074	13.61	$675.00	$347.54	$135.00
31238	T	Nasal/sinus endoscopy, surg	0074	13.61	$675.00	$347.54	$135.00
31239	T	Nasal/sinus endoscopy, surg	0075	18.55	$920.01	$467.29	$184.00
31240	T	Nasal/sinus endoscopy, surg	0074	13.61	$675.00	$347.54	$135.00
31254	T	Revision of ethmoid sinus	0075	18.55	$920.01	$467.29	$184.00
31255	T	Removal of ethmoid sinus	0075	18.55	$920.01	$467.29	$184.00
31256	T	Exploration maxillary sinus	0075	18.55	$920.01	$467.29	$184.00

CPT codes and descriptions only are copyright American Medical Association. All Rights Reserved. Applicable FARS/DFARS Apply.
Copyright American Dental Association. All rights reserved.
*Code is new in 2001.

ADDENDUM B.—HOSPITAL OUTPATIENT DEPARTMENT (HOPD) PAYMENT STATUS BY HCPCS CODE AND RELATED INFORMATION—Continued

CPT/ HCPCS	HOPD Status Indicator	Description	APC	Relative Weight	Payment Rate	National Unadjusted Coinsurance	Minimum Unadjusted Coinsurance
31267	T	Endoscopy, maxillary sinus	0075	18.55	$920.01	$467.29	$184.00
31276	T	Sinus endoscopy, surgical	0075	18.55	$920.01	$467.29	$184.00
31287	T	Nasal/sinus endoscopy, surg	0075	18.55	$920.01	$467.29	$184.00
31288	T	Nasal/sinus endoscopy, surg	0075	18.55	$920.01	$467.29	$184.00
31290	C	Nasal/sinus endoscopy, surg					
31291	C	Nasal/sinus endoscopy, surg					
31292	C	Nasal/sinus endoscopy, surg					
31293	C	Nasal/sinus endoscopy, surg					
31294	C	Nasal/sinus endoscopy, surg					
31299	T	Sinus surgery procedure	0252	5.18	$256.90	$114.24	$51.38
31300	T	Removal of larynx lesion	0256	25.40	$1,259.74	$623.05	$251.95
31320	T	Diagnostic incision, larynx	0256	25.40	$1,259.74	$623.05	$251.95
31360	C	Removal of larynx					
31365	C	Removal of larynx					
31367	C	Partial removal of larynx					
31368	C	Partial removal of larynx					
31370	C	Partial removal of larynx					
31375	C	Partial removal of larynx					
31380	C	Partial removal of larynx					
31382	C	Partial removal of larynx					
31390	C	Removal of larynx & pharynx					
31395	C	Reconstruct larynx & pharynx					
31400	T	Revision of larynx	0256	25.40	$1,259.74	$623.05	$251.95
31420	T	Removal of epiglottis	0256	25.40	$1,259.74	$623.05	$251.95
31500	S	Insert emergency airway	0094	4.51	$223.68	$105.29	$44.74
31502	T	Change of windpipe airway	0121	2.36	$117.05	$52.53	$23.41
31505	T	Diagnostic laryngoscopy	0072	1.26	$62.49	$41.52	$12.50
31510	T	Laryngoscopy with biopsy	0074	13.61	$675.00	$347.54	$135.00
31511	T	Remove foreign body, larynx	0072	1.26	$62.49	$41.52	$12.50
31512	T	Removal of larynx lesion	0074	13.61	$675.00	$347.54	$135.00
31513	T	Injection into vocal cord	0073	4.11	$203.84	$91.07	$40.77
31515	T	Laryngoscopy for aspiration	0074	13.61	$675.00	$347.54	$135.00
31520	T	Diagnostic laryngoscopy	0072	1.26	$62.49	$41.52	$12.50
31525	T	Diagnostic laryngoscopy	0074	13.61	$675.00	$347.54	$135.00
31526	T	Diagnostic laryngoscopy	0074	13.61	$675.00	$347.54	$135.00
31527	T	Laryngoscopy for treatment	0075	18.55	$920.01	$467.29	$184.00
31528	T	Laryngoscopy and dilatation	0074	13.61	$675.00	$347.54	$135.00
31529	T	Laryngoscopy and dilatation	0074	13.61	$675.00	$347.54	$135.00
31530	T	Operative laryngoscopy	0075	18.55	$920.01	$467.29	$184.00
31531	T	Operative laryngoscopy	0075	18.55	$920.01	$467.29	$184.00
31535	T	Operative laryngoscopy	0075	18.55	$920.01	$467.29	$184.00
31536	T	Operative laryngoscopy	0075	18.55	$920.01	$467.29	$184.00
31540	T	Operative laryngoscopy	0075	18.55	$920.01	$467.29	$184.00
31541	T	Operative laryngoscopy	0075	18.55	$920.01	$467.29	$184.00
31560	T	Operative laryngoscopy	0075	18.55	$920.01	$467.29	$184.00
31561	T	Operative laryngoscopy	0075	18.55	$920.01	$467.29	$184.00
31570	T	Laryngoscopy with injection	0075	18.55	$920.01	$467.29	$184.00
31571	T	Laryngoscopy with injection	0075	18.55	$920.01	$467.29	$184.00
31575	T	Diagnostic laryngoscopy	0071	0.55	$27.28	$14.22	$5.46
31576	T	Laryngoscopy with biopsy	0074	13.61	$675.00	$347.54	$135.00
31577	T	Remove foreign body, larynx	0073	4.11	$203.84	$91.07	$40.77
31578	T	Removal of larynx lesion	0074	13.61	$675.00	$347.54	$135.00
31579	T	Diagnostic laryngoscopy	0073	4.11	$203.84	$91.07	$40.77
31580	T	Revision of larynx	0256	25.40	$1,259.74	$623.05	$251.95
31582	C	Revision of larynx					
31584	C	Treat larynx fracture					
31585	T	Treat larynx fracture	0253	12.02	$596.14	$284.00	$119.23
31586	T	Treat larynx fracture	0256	25.40	$1,259.74	$623.05	$251.95
31587	C	Revision of larynx					
31588	T	Revision of larynx	0256	25.40	$1,259.74	$623.05	$251.95
31590	T	Reinnervate larynx	0256	25.40	$1,259.74	$623.05	$251.95
31595	T	Larynx nerve surgery	0256	25.40	$1,259.74	$623.05	$251.95
31599	T	Larynx surgery procedure	0253	12.02	$596.14	$284.00	$119.23
31600	T	Incision of windpipe	0254	12.45	$617.47	$272.41	$123.49
31601	T	Incision of windpipe	0254	12.45	$617.47	$272.41	$123.49
31603	T	Incision of windpipe	0254	12.45	$617.47	$272.41	$123.49
31605	T	Incision of windpipe	0254	12.45	$617.47	$272.41	$123.49
31610	T	Incision of windpipe	0254	12.45	$617.47	$272.41	$123.49
31611	T	Surgery/speech prosthesis	0254	12.45	$617.47	$272.41	$123.49
31612	T	Puncture/clear windpipe	0253	12.02	$596.14	$284.00	$119.23
31613	T	Repair windpipe opening	0254	12.45	$617.47	$272.41	$123.49
31614	T	Repair windpipe opening	0256	25.40	$1,259.74	$623.05	$251.95
31615	T	Visualization of windpipe	0076	8.06	$399.75	$197.05	$79.95
31622	T	Dx bronchoscope/wash	0076	8.06	$399.75	$197.05	$79.95

CPT codes and descriptions only are copyright American Medical Association. All Rights Reserved. Applicable FARS/DFARS Apply.
Copyright American Dental Association. All rights reserved.
*Code is new in 2001.

ADDENDUM B.—HOSPITAL OUTPATIENT DEPARTMENT (HOPD) PAYMENT STATUS BY HCPCS CODE AND RELATED INFORMATION—Continued

CPT/ HCPCS	HOPD Status Indicator	Description	APC	Relative Weight	Payment Rate	National Unadjusted Coinsurance	Minimum Unadjusted Coinsurance
31623	T	Dx bronchoscope/brush	0076	8.06	$399.75	$197.05	$79.95
31624	T	Dx bronchoscope/lavage	0076	8.06	$399.75	$197.05	$79.95
31625	T	Bronchoscopy with biopsy	0076	8.06	$399.75	$197.05	$79.95
31628	T	Bronchoscopy with biopsy	0076	8.06	$399.75	$197.05	$79.95
31629	T	Bronchoscopy with biopsy	0076	8.06	$399.75	$197.05	$79.95
31630	T	Bronchoscopy with repair	0076	8.06	$399.75	$197.05	$79.95
31631	T	Bronchoscopy with dilation	0076	8.06	$399.75	$197.05	$79.95
31635	T	Remove foreign body, airway	0076	8.06	$399.75	$197.05	$79.95
31640	T	Bronchoscopy & remove lesion	0076	8.06	$399.75	$197.05	$79.95
31641	T	Bronchoscopy, treat blockage	0076	8.06	$399.75	$197.05	$79.95
31643	T	Diag bronchoscope/catheter	0076	8.06	$399.75	$197.05	$79.95
31645	T	Bronchoscopy, clear airways	0076	8.06	$399.75	$197.05	$79.95
31646	T	Bronchoscopy, reclear airway	0076	8.06	$399.75	$197.05	$79.95
31656	T	Bronchoscopy, inj for xray	0076	8.06	$399.75	$197.05	$79.95
31700	T	Insertion of airway catheter	0072	1.26	$62.49	$41.52	$12.50
31708	N	Instill airway contrast dye					
31710	N	Insertion of airway catheter					
31715	N	Injection for bronchus x-ray					
31717	T	Bronchial brush biopsy	0073	4.11	$203.84	$91.07	$40.77
31720	T	Clearance of airways	0072	1.26	$62.49	$41.52	$12.50
31725	C	Clearance of airways					
31730	T	Intro, windpipe wire/tube	0073	4.11	$203.84	$91.07	$40.77
31750	T	Repair of windpipe	0256	25.40	$1,259.74	$623.05	$251.95
31755	T	Repair of windpipe	0256	25.40	$1,259.74	$623.05	$251.95
31760	C	Repair of windpipe					
31766	C	Reconstruction of windpipe					
31770	C	Repair/graft of bronchus					
31775	C	Reconstruct bronchus					
31780	C	Reconstruct windpipe					
31781	C	Reconstruct windpipe					
31785	C	Remove windpipe lesion					
31786	C	Remove windpipe lesion					
31800	C	Repair of windpipe injury					
31805	C	Repair of windpipe injury					
31820	T	Closure of windpipe lesion	0253	12.02	$596.14	$284.00	$119.23
31825	T	Repair of windpipe defect	0254	12.45	$617.47	$272.41	$123.49
31830	T	Revise windpipe scar	0254	12.45	$617.47	$272.41	$123.49
31899	T	Airways surgical procedure	0076	8.06	$399.75	$197.05	$79.95
32000	T	Drainage of chest	0070	3.64	$180.53	$79.60	$36.11
32002	T	Treatment of collapsed lung	0070	3.64	$180.53	$79.60	$36.11
32005	T	Treat lung lining chemically	0070	3.64	$180.53	$79.60	$36.11
32020	T	Insertion of chest tube	0070	3.64	$180.53	$79.60	$36.11
32035	C	Exploration of chest					
32036	C	Exploration of chest					
32095	C	Biopsy through chest wall					
32100	C	Exploration/biopsy of chest					
32110	C	Explore/repair chest					
32120	C	Re-exploration of chest					
32124	C	Explore chest free adhesions					
32140	C	Removal of lung lesion(s)					
32141	C	Remove/treat lung lesions					
32150	C	Removal of lung lesion(s)					
32151	C	Remove lung foreign body					
32160	C	Open chest heart massage					
32200	C	Drain, open, lung lesion					
32201	C	Drain, percut, lung lesion					
32215	C	Treat chest lining					
32220	C	Release of lung					
32225	C	Partial release of lung					
32310	C	Removal of chest lining					
32320	C	Free/remove chest lining					
32400	T	Needle biopsy chest lining	0005	5.41	$268.32	$119.75	$53.66
32402	C	Open biopsy chest lining					
32405	T	Biopsy, lung or mediastinum	0005	5.41	$268.32	$119.75	$53.66
32420	T	Puncture/clear lung	0070	3.64	$180.53	$79.60	$36.11
32440	C	Removal of lung					
32442	C	Sleeve pneumonectomy					
32445	C	Removal of lung					
32480	C	Partial removal of lung					
32482	C	Bilobectomy					
32484	C	Segmentectomy					
32486	C	Sleeve lobectomy					
32488	C	Completion pneumonectomy					
32491	C	Lung volume reduction					

CPT codes and descriptions only are copyright American Medical Association. All Rights Reserved. Applicable FARS/DFARS Apply.
Copyright American Dental Association. All rights reserved.
*Code is new in 2001.

ADDENDUM B.—HOSPITAL OUTPATIENT DEPARTMENT (HOPD) PAYMENT STATUS BY HCPCS CODE AND RELATED INFORMATION—Continued

CPT/ HCPCS	HOPD Status Indicator	Description	APC	Relative Weight	Payment Rate	National Unadjusted Coinsurance	Minimum Unadjusted Coinsurance
32500	C	Partial removal of lung					
32501	C	Repair bronchus add-on					
32520	C	Remove lung & revise chest					
32522	C	Remove lung & revise chest					
32525	C	Remove lung & revise chest					
32540	C	Removal of lung lesion					
32601	T	Thoracoscopy, diagnostic	0076	8.06	$399.75	$197.05	$79.95
32602	T	Thoracoscopy, diagnostic	0076	8.06	$399.75	$197.05	$79.95
32603	T	Thoracoscopy, diagnostic	0076	8.06	$399.75	$197.05	$79.95
32604	T	Thoracoscopy, diagnostic	0076	8.06	$399.75	$197.05	$79.95
32605	T	Thoracoscopy, diagnostic	0076	8.06	$399.75	$197.05	$79.95
32606	T	Thoracoscopy, diagnostic	0076	8.06	$399.75	$197.05	$79.95
32650	C	Thoracoscopy, surgical					
32651	C	Thoracoscopy, surgical					
32652	C	Thoracoscopy, surgical					
32653	C	Thoracoscopy, surgical					
32654	C	Thoracoscopy, surgical					
32655	C	Thoracoscopy, surgical					
32656	C	Thoracoscopy, surgical					
32657	C	Thoracoscopy, surgical					
32658	C	Thoracoscopy, surgical					
32659	C	Thoracoscopy, surgical					
32660	C	Thoracoscopy, surgical					
32661	C	Thoracoscopy, surgical					
32662	C	Thoracoscopy, surgical					
32663	C	Thoracoscopy, surgical					
32664	C	Thoracoscopy, surgical					
32665	C	Thoracoscopy, surgical					
32800	C	Repair lung hernia					
32810	C	Close chest after drainage					
32815	C	Close bronchial fistula					
32820	C	Reconstruct injured chest					
32850	C	Donor pneumonectomy					
32851	C	Lung transplant, single					
32852	C	Lung transplant with bypass					
32853	C	Lung transplant, double					
32854	C	Lung transplant with bypass					
32900	C	Removal of rib(s)					
32905	C	Revise & repair chest wall					
32906	C	Revise & repair chest wall					
32940	C	Revision of lung					
32960	T	Therapeutic pneumothorax	0070	3.64	$180.53	$79.60	$36.11
32997	C	Total lung lavage					
32999	T	Chest surgery procedure	0070	3.64	$180.53	$79.60	$36.11
33010	T	Drainage of heart sac	0070	3.64	$180.53	$79.60	$36.11
33011	T	Repeat drainage of heart sac	0070	3.64	$180.53	$79.60	$36.11
33015	C	Incision of heart sac					
33020	C	Incision of heart sac					
33025	C	Incision of heart sac					
33030	C	Partial removal of heart sac					
33031	C	Partial removal of heart sac					
33050	C	Removal of heart sac lesion					
33120	C	Removal of heart lesion					
33130	C	Removal of heart lesion					
33140	C	Heart revascularize (tmr)					
*33141	C	Heart TMR w/ other procedure					
33200	C	Insertion of heart pacemaker					
33201	C	Insertion of heart pacemaker					
33206	T	Insertion of heart pacemaker	0089	78.45	$3,890.81	$2,275.19	$778.16
33207	T	Insertion of heart pacemaker	0089	78.45	$3,890.81	$2,275.19	$778.16
33208	T	Insertion of heart pacemaker	0089	78.45	$3,890.81	$2,275.19	$778.16
33210	T	Insertion of heart electrode	0106	18.96	$940.34	$503.07	$188.07
33211	T	Insertion of heart electrode	0106	18.96	$940.34	$503.07	$188.07
33212	T	Insertion of pulse generator	0090	78.28	$3,882.37	$2,133.88	$776.47
33213	T	Insertion of pulse generator	0090	78.28	$3,882.37	$2,133.88	$776.47
33214	T	Upgrade of pacemaker system	0089	78.45	$3,890.81	$2,275.19	$778.16
33216	T	Revise eltrd pacing-defib	0106	18.96	$940.34	$503.07	$188.07
33217	T	Revise eltrd pacing-defib	0106	18.96	$940.34	$503.07	$188.07
33218	T	Revise eltrd pacing-defib	0106	18.96	$940.34	$503.07	$188.07
33220	T	Revise eltrd pacing-defib	0106	18.96	$940.34	$503.07	$188.07
33222	T	Revise pocket, pacemaker	0026	12.11	$600.61	$277.92	$120.12
33223	T	Revise pocket, pacing-defib	0026	12.11	$600.61	$277.92	$120.12
33233	T	Removal of pacemaker system	0105	15.06	$746.92	$372.32	$149.38
33234	T	Removal of pacemaker system	0105	15.06	$746.92	$372.32	$149.38

CPT codes and descriptions only are copyright American Medical Association. All Rights Reserved. Applicable FARS/DFARS Apply.
Copyright American Dental Association. All rights reserved.
*Code is new in 2001.

ADDENDUM B.—HOSPITAL OUTPATIENT DEPARTMENT (HOPD) PAYMENT STATUS BY HCPCS CODE AND RELATED INFORMATION—Continued

CPT/ HCPCS	HOPD Status Indicator	Description	APC	Relative Weight	Payment Rate	National Unadjusted Coinsurance	Minimum Unadjusted Coinsurance
33235	T	Removal pacemaker electrode	0105	15.06	$746.92	$372.32	$149.38
33236	C	Remove electrode/thoracotomy					
33237	C	Remove electrode/thoracotomy					
33238	C	Remove electrode/thoracotomy					
33240	T	Insert pulse generator	0107	147.51	$7,315.91	$5,086.37	$1,463.18
33241	T	Remove pulse generator	0105	15.06	$746.92	$372.32	$149.38
33243	C	Remove eltrd/thoracotomy					
33244	T	Remove eltrd, transven	0105	15.06	$746.92	$372.32	$149.38
33245	C	Insert epic eltrd pace-defib					
33246	C	Insert epic eltrd/generator					
33249	T	Eltrd/insert pace-defib	0108	210.84	$10,456.84	$5,484.72	$2,091.37
33250	C	Ablate heart dysrhythm focus					
33251	C	Ablate heart dysrhythm focus					
33253	C	Reconstruct atria					
33261	C	Ablate heart dysrhythm focus					
33282	S	Implant pat-active ht record	0974	8.25	$409.17		$81.83
33284	T	Remove pat-active ht record	0109	6.53	$323.86	$133.51	$64.77
33300	C	Repair of heart wound					
33305	C	Repair of heart wound					
33310	C	Exploratory heart surgery					
33315	C	Exploratory heart surgery					
33320	C	Repair major blood vessel(s)					
33321	C	Repair major vessel					
33322	C	Repair major blood vessel(s)					
33330	C	Insert major vessel graft					
33332	C	Insert major vessel graft					
33335	C	Insert major vessel graft					
33400	C	Repair of aortic valve					
33401	C	Valvuloplasty, open					
33403	C	Valvuloplasty, w/cp bypass					
33404	C	Prepare heart-aorta conduit					
33405	C	Replacement of aortic valve					
33406	C	Replacement of aortic valve					
33410	C	Replacement of aortic valve					
33411	C	Replacement of aortic valve					
33412	C	Replacement of aortic valve					
33413	C	Replacement of aortic valve					
33414	C	Repair of aortic valve					
33415	C	Revision, subvalvular tissue					
33416	C	Revise ventricle muscle					
33417	C	Repair of aortic valve					
33420	C	Revision of mitral valve					
33422	C	Revision of mitral valve					
33425	C	Repair of mitral valve					
33426	C	Repair of mitral valve					
33427	C	Repair of mitral valve					
33430	C	Replacement of mitral valve					
33460	C	Revision of tricuspid valve					
33463	C	Valvuloplasty, tricuspid					
33464	C	Valvuloplasty, tricuspid					
33465	C	Replace tricuspid valve					
33468	C	Revision of tricuspid valve					
33470	C	Revision of pulmonary valve					
33471	C	Valvotomy, pulmonary valve					
33472	C	Revision of pulmonary valve					
33474	C	Revision of pulmonary valve					
33475	C	Replacement, pulmonary valve					
33476	C	Revision of heart chamber					
33478	C	Revision of heart chamber					
33496	C	Repair, prosth valve clot					
33500	C	Repair heart vessel fistula					
33501	C	Repair heart vessel fistula					
33502	C	Coronary artery correction					
33503	C	Coronary artery graft					
33504	C	Coronary artery graft					
33505	C	Repair artery w/tunnel					
33506	C	Repair artery, translocation					
33510	C	CABG, vein, single					
33511	C	CABG, vein, two					
33512	C	CABG, vein, three					
33513	C	CABG, vein, four					
33514	C	CABG, vein, five					
33516	C	Cabg, vein, six or more					
33517	C	CABG, artery-vein, single					

CPT codes and descriptions only are copyright American Medical Association. All Rights Reserved. Applicable FARS/DFARS Apply.
Copyright American Dental Association. All rights reserved.
*Code is new in 2001.

ADDENDUM B.—HOSPITAL OUTPATIENT DEPARTMENT (HOPD) PAYMENT STATUS BY HCPCS CODE AND RELATED INFORMATION—Continued

CPT/ HCPCS	HOPD Status Indicator	Description	APC	Relative Weight	Payment Rate	National Unadjusted Coinsurance	Minimum Unadjusted Coinsurance
33518	C	CABG, artery-vein, two					
33519	C	CABG, artery-vein, three					
33521	C	CABG, artery-vein, four					
33522	C	CABG, artery-vein, five					
33523	C	Cabg, art-vein, six or more					
33530	C	Coronary artery, bypass/reop					
33533	C	CABG, arterial, single					
33534	C	CABG, arterial, two					
33535	C	CABG, arterial, three					
33536	C	Cabg, arterial, four or more					
33542	C	Removal of heart lesion					
33545	C	Repair of heart damage					
33572	C	Open coronary endarterectomy					
33600	C	Closure of valve					
33602	C	Closure of valve					
33606	C	Anastomosis/artery-aorta					
33608	C	Repair anomaly w/conduit					
33610	C	Repair by enlargement					
33611	C	Repair double ventricle					
33612	C	Repair double ventricle					
33615	C	Repair, simple fontan					
33617	C	Repair, modified fontan					
33619	C	Repair single ventricle					
33641	C	Repair heart septum defect					
33645	C	Revision of heart veins					
33647	C	Repair heart septum defects					
33660	C	Repair of heart defects					
33665	C	Repair of heart defects					
33670	C	Repair of heart chambers					
33681	C	Repair heart septum defect					
33684	C	Repair heart septum defect					
33688	C	Repair heart septum defect					
33690	C	Reinforce pulmonary artery					
33692	C	Repair of heart defects					
33694	C	Repair of heart defects					
33697	C	Repair of heart defects					
33702	C	Repair of heart defects					
33710	C	Repair of heart defects					
33720	C	Repair of heart defect					
33722	C	Repair of heart defect					
33730	C	Repair heart-vein defect(s)					
33732	C	Repair heart-vein defect					
33735	C	Revision of heart chamber					
33736	C	Revision of heart chamber					
33737	C	Revision of heart chamber					
33750	C	Major vessel shunt					
33755	C	Major vessel shunt					
33762	C	Major vessel shunt					
33764	C	Major vessel shunt & graft					
33766	C	Major vessel shunt					
33767	C	Major vessel shunt					
33770	C	Repair great vessels defect					
33771	C	Repair great vessels defect					
33774	C	Repair great vessels defect					
33775	C	Repair great vessels defect					
33776	C	Repair great vessels defect					
33777	C	Repair great vessels defect					
33778	C	Repair great vessels defect					
33779	C	Repair great vessels defect					
33780	C	Repair great vessels defect					
33781	C	Repair great vessels defect					
33786	C	Repair arterial trunk					
33788	C	Revision of pulmonary artery					
33800	C	Aortic suspension					
33802	C	Repair vessel defect					
33803	C	Repair vessel defect					
33813	C	Repair septal defect					
33814	C	Repair septal defect					
33820	C	Revise major vessel					
33822	C	Revise major vessel					
33824	C	Revise major vessel					
33840	C	Remove aorta constriction					
33845	C	Remove aorta constriction					
33851	C	Remove aorta constriction					

CPT codes and descriptions only are copyright American Medical Association. All Rights Reserved. Applicable FARS/DFARS Apply.
Copyright American Dental Association. All rights reserved.
*Code is new in 2001.

ADDENDUM B.—HOSPITAL OUTPATIENT DEPARTMENT (HOPD) PAYMENT STATUS BY HCPCS CODE AND RELATED INFORMATION—Continued

CPT/ HCPCS	HOPD Status Indicator	Description	APC	Relative Weight	Payment Rate	National Unadjusted Coinsurance	Minimum Unadjusted Coinsurance
33852	C	Repair septal defect					
33853	C	Repair septal defect					
33860	C	Ascending aortic graft					
33861	C	Ascending aortic graft					
33863	C	Ascending aortic graft					
33870	C	Transverse aortic arch graft					
33875	C	Thoracic aortic graft					
33877	C	Thoracoabdominal graft					
33910	C	Remove lung artery emboli					
33915	C	Remove lung artery emboli					
33916	C	Surgery of great vessel					
33917	C	Repair pulmonary artery					
33918	C	Repair pulmonary atresia					
33919	C	Repair pulmonary atresia					
33920	C	Repair pulmonary atresia					
33922	C	Transect pulmonary artery					
33924	C	Remove pulmonary shunt					
33930	C	Removal of donor heart/lung					
33935	C	Transplantation, heart/lung					
33940	C	Removal of donor heart					
33945	C	Transplantation of heart					
33960	C	External circulation assist					
33961	C	External circulation assist					
33968	C	Remove aortic assist device					
33970	C	Aortic circulation assist					
33971	C	Aortic circulation assist					
33973	C	Insert balloon device					
33974	C	Remove intra-aortic balloon					
33975	C	Implant ventricular device					
33976	C	Implant ventricular device					
33977	C	Remove ventricular device					
33978	C	Remove ventricular device					
33999	T	Cardiac surgery procedure	0070	3.64	$180.53	$79.60	$36.11
34001	C	Removal of artery clot					
34051	C	Removal of artery clot					
34101	T	Removal of artery clot	0088	26.49	$1,313.80	$678.68	$262.76
34111	T	Removal of arm artery clot	0088	26.49	$1,313.80	$678.68	$262.76
34151	C	Removal of artery clot					
34201	T	Removal of artery clot	0088	26.49	$1,313.80	$678.68	$262.76
34203	T	Removal of leg artery clot	0088	26.49	$1,313.80	$678.68	$262.76
34401	C	Removal of vein clot					
34421	T	Removal of vein clot	0088	26.49	$1,313.80	$678.68	$262.76
34451	C	Removal of vein clot					
34471	T	Removal of vein clot	0088	26.49	$1,313.80	$678.68	$262.76
34490	T	Removal of vein clot	0088	26.49	$1,313.80	$678.68	$262.76
34501	T	Repair valve, femoral vein	0088	26.49	$1,313.80	$678.68	$262.76
34502	C	Reconstruct vena cava					
34510	T	Transposition of vein valve	0088	26.49	$1,313.80	$678.68	$262.76
34520	T	Cross-over vein graft	0088	26.49	$1,313.80	$678.68	$262.76
34530	T	Leg vein fusion	0088	26.49	$1,313.80	$678.68	$262.76
*34800	C	Endovasc abdo repair w/tube					
*34802	C	Endovasc abdo repr w/device					
*34804	C	Endovasc abdo repr w/device					
*34808	C	Endovasc abdo occlud device					
*34812	C	xpose for endoprosth, aortic					
*34813	C	xpose for endoprosth, femoral					
*34820	C	xpose for endoprosth, iliac					
*34825	C	endovasc extend prosth, init					
*34826	C	endovasc extend prosth,addl					
*34830	C	open aortic tube prosth repr					
*34831	C	open aortoiliac prosth repr					
*34832	C	open aortofemor prosth repr					
35001	C	Repair defect of artery					
35002	C	Repair artery rupture, neck					
35005	C	Repair defect of artery					
35011	T	Repair defect of artery	0093	12.82	$635.82	$277.34	$127.16
35013	C	Repair artery rupture, arm					
35021	C	Repair defect of artery					
35022	C	Repair artery rupture, chest					
35045	C	Repair defect of arm artery					
35081	C	Repair defect of artery					
35082	C	Repair artery rupture, aorta					
35091	C	Repair defect of artery					
35092	C	Repair artery rupture, aorta					

CPT codes and descriptions only are copyright American Medical Association. All Rights Reserved. Applicable FARS/DFARS Apply.
Copyright American Dental Association. All rights reserved.
*Code is new in 2001.

ADDENDUM B.—HOSPITAL OUTPATIENT DEPARTMENT (HOPD) PAYMENT STATUS BY HCPCS CODE AND RELATED INFORMATION—Continued

CPT/ HCPCS	HOPD Status Indicator	Description	APC	Relative Weight	Payment Rate	National Unadjusted Coinsurance	Minimum Unadjusted Coinsurance
35102	C	Repair defect of artery					
35103	C	Repair artery rupture, groin					
35111	C	Repair defect of artery					
35112	C	Repair artery rupture,spleen					
35121	C	Repair defect of artery					
35122	C	Repair artery rupture, belly					
35131	C	Repair defect of artery					
35132	C	Repair artery rupture, groin					
35141	C	Repair defect of artery					
35142	C	Repair artery rupture, thigh					
35151	C	Repair defect of artery					
35152	C	Repair artery rupture, knee					
35161	C	Repair defect of artery					
35162	C	Repair artery rupture					
35180	T	Repair blood vessel lesion	0093	12.82	$635.82	$277.34	$127.16
35182	C	Repair blood vessel lesion					
35184	T	Repair blood vessel lesion	0093	12.82	$635.82	$277.34	$127.16
35188	T	Repair blood vessel lesion	0088	26.49	$1,313.80	$678.68	$262.76
35189	C	Repair blood vessel lesion					
35190	T	Repair blood vessel lesion	0093	12.82	$635.82	$277.34	$127.16
35201	T	Repair blood vessel lesion	0093	12.82	$635.82	$277.34	$127.16
35206	T	Repair blood vessel lesion	0093	12.82	$635.82	$277.34	$127.16
35207	T	Repair blood vessel lesion	0088	26.49	$1,313.80	$678.68	$262.76
35211	C	Repair blood vessel lesion					
35216	C	Repair blood vessel lesion					
35221	C	Repair blood vessel lesion					
35226	T	Repair blood vessel lesion	0093	12.82	$635.82	$277.34	$127.16
35231	T	Repair blood vessel lesion	0093	12.82	$635.82	$277.34	$127.16
35236	T	Repair blood vessel lesion	0093	12.82	$635.82	$277.34	$127.16
35241	C	Repair blood vessel lesion					
35246	C	Repair blood vessel lesion					
35251	C	Repair blood vessel lesion					
35256	T	Repair blood vessel lesion	0093	12.82	$635.82	$277.34	$127.16
35261	T	Repair blood vessel lesion	0093	12.82	$635.82	$277.34	$127.16
35266	T	Repair blood vessel lesion	0093	12.82	$635.82	$277.34	$127.16
35271	C	Repair blood vessel lesion					
35276	C	Repair blood vessel lesion					
35281	C	Repair blood vessel lesion					
35286	T	Repair blood vessel lesion	0093	12.82	$635.82	$277.34	$127.16
35301	C	Rechanneling of artery					
35311	C	Rechanneling of artery					
35321	T	Rechanneling of artery	0093	12.82	$635.82	$277.34	$127.16
35331	C	Rechanneling of artery					
35341	C	Rechanneling of artery					
35351	C	Rechanneling of artery					
35355	C	Rechanneling of artery					
35361	C	Rechanneling of artery					
35363	C	Rechanneling of artery					
35371	C	Rechanneling of artery					
35372	C	Rechanneling of artery					
35381	C	Rechanneling of artery					
35390	C	Reoperation, carotid add-on					
35400	C	Angioscopy					
35450	C	Repair arterial blockage					
35452	C	Repair arterial blockage					
35454	C	Repair arterial blockage					
35456	C	Repair arterial blockage					
35458	T	Repair arterial blockage	0081	28.81	$1,428.86	$710.91	$285.77
35459	T	Repair arterial blockage	0081	28.81	$1,428.86	$710.91	$285.77
35460	T	Repair venous blockage	0081	28.81	$1,428.86	$710.91	$285.77
35470	T	Repair arterial blockage	0081	28.81	$1,428.86	$710.91	$285.77
35471	T	Repair arterial blockage	0081	28.81	$1,428.86	$710.91	$285.77
35472	T	Repair arterial blockage	0081	28.81	$1,428.86	$710.91	$285.77
35473	T	Repair arterial blockage	0081	28.81	$1,428.86	$710.91	$285.77
35474	T	Repair arterial blockage	0081	28.81	$1,428.86	$710.91	$285.77
35475	T	Repair arterial blockage	0081	28.81	$1,428.86	$710.91	$285.77
35476	T	Repair venous blockage	0081	28.81	$1,428.86	$710.91	$285.77
35480	C	Atherectomy, open					
35481	T	Atherectomy, open	0081	28.81	$1,428.86	$710.91	$285.77
35482	C	Atherectomy, open					
35483	C	Atherectomy, open					
35484	T	Atherectomy, open	0081	28.81	$1,428.86	$710.91	$285.77
35485	T	Atherectomy, open	0081	28.81	$1,428.86	$710.91	$285.77
35490	T	Atherectomy, percutaneous	0081	28.81	$1,428.86	$710.91	$285.77

CPT codes and descriptions only are copyright American Medical Association. All Rights Reserved. Applicable FARS/DFARS Apply.
Copyright American Dental Association. All rights reserved.
*Code is new in 2001.

ADDENDUM B.—HOSPITAL OUTPATIENT DEPARTMENT (HOPD) PAYMENT STATUS BY HCPCS CODE AND RELATED INFORMATION—Continued

CPT/ HCPCS	HOPD Status Indicator	Description	APC	Relative Weight	Payment Rate	National Unadjusted Coinsurance	Minimum Unadjusted Coinsurance
35491	T	Atherectomy, percutaneous	0081	28.81	$1,428.86	$710.91	$285.77
35492	T	Atherectomy, percutaneous	0081	28.81	$1,428.86	$710.91	$285.77
35493	T	Atherectomy, percutaneous	0081	28.81	$1,428.86	$710.91	$285.77
35494	T	Atherectomy, percutaneous	0081	28.81	$1,428.86	$710.91	$285.77
35495	T	Atherectomy, percutaneous	0081	28.81	$1,428.86	$710.91	$285.77
35500	T	Harvest vein for bypass	0091	14.79	$733.52	$348.23	$146.70
35501	C	Artery bypass graft					
35506	C	Artery bypass graft					
35507	C	Artery bypass graft					
35508	C	Artery bypass graft					
35509	C	Artery bypass graft					
35511	C	Artery bypass graft					
35515	C	Artery bypass graft					
35516	C	Artery bypass graft					
35518	C	Artery bypass graft					
35521	C	Artery bypass graft					
35526	C	Artery bypass graft					
35531	C	Artery bypass graft					
35533	C	Artery bypass graft					
35536	C	Artery bypass graft					
35541	C	Artery bypass graft					
35546	C	Artery bypass graft					
35548	C	Artery bypass graft					
35549	C	Artery bypass graft					
35551	C	Artery bypass graft					
35556	C	Artery bypass graft					
35558	C	Artery bypass graft					
35560	C	Artery bypass graft					
35563	C	Artery bypass graft					
35565	C	Artery bypass graft					
35566	C	Artery bypass graft					
35571	C	Artery bypass graft					
35582	C	Vein bypass graft					
35583	C	Vein bypass graft					
35585	C	Vein bypass graft					
35587	C	Vein bypass graft					
*35600	C	Harvest artery for CABG					
35601	C	Artery bypass graft					
35606	C	Artery bypass graft					
35612	C	Artery bypass graft					
35616	C	Artery bypass graft					
35621	C	Artery bypass graft					
35623	C	Bypass graft, not vein					
35626	C	Artery bypass graft					
35631	C	Artery bypass graft					
35636	C	Artery bypass graft					
35641	C	Artery bypass graft					
35642	C	Artery bypass graft					
35645	C	Artery bypass graft					
35646	C	Artery bypass graft					
35650	C	Artery bypass graft					
35651	C	Artery bypass graft					
35654	C	Artery bypass graft					
35656	C	Artery bypass graft					
35661	C	Artery bypass graft					
35663	C	Artery bypass graft					
35665	C	Artery bypass graft					
35666	C	Artery bypass graft					
35671	C	Artery bypass graft					
35681	C	Composite bypass graft					
35682	C	Composite bypass graft					
35683	C	Composite bypass graft					
35691	C	Arterial transposition					
35693	C	Arterial transposition					
35694	C	Arterial transposition					
35695	C	Arterial transposition					
35700	C	Reoperation, bypass graft					
35701	C	Exploration, carotid artery					
35721	C	Exploration, femoral artery					
35741	C	Exploration popliteal artery					
35761	T	Exploration of artery/vein	0115	19.34	$959.19	$506.74	$191.84
35800	C	Explore neck vessels					
35820	C	Explore chest vessels					
35840	C	Explore abdominal vessels					

CPT codes and descriptions only are copyright American Medical Association. All Rights Reserved. Applicable FARS/DFARS Apply.
Copyright American Dental Association. All rights reserved.
*Code is new in 2001.

ADDENDUM B.—HOSPITAL OUTPATIENT DEPARTMENT (HOPD) PAYMENT STATUS BY HCPCS CODE AND RELATED INFORMATION—Continued

CPT/ HCPCS	HOPD Status Indicator	Description	APC	Relative Weight	Payment Rate	National Unadjusted Coinsurance	Minimum Unadjusted Coinsurance
35860	T	Explore limb vessels	0115	19.34	$959.19	$506.74	$191.84
35870	C	Repair vessel graft defect					
35875	T	Removal of clot in graft	0088	26.49	$1,313.80	$678.68	$262.76
35876	T	Removal of clot in graft	0088	26.49	$1,313.80	$678.68	$262.76
35879	T	Revise graft w/vein	0088	26.49	$1,313.80	$678.68	$262.76
35881	T	Revise graft w/vein	0088	26.49	$1,313.80	$678.68	$262.76
35901	C	Excision, graft, neck					
35903	T	Excision, graft, extremity	0115	19.34	$959.19	$506.74	$191.84
35905	C	Excision, graft, thorax					
35907	C	Excision, graft, abdomen					
36000	N	Place needle in vein					
36005	N	Injection, venography					
36010	N	Place catheter in vein					
36011	N	Place catheter in vein					
36012	N	Place catheter in vein					
36013	N	Place catheter in artery					
36014	N	Place catheter in artery					
36015	N	Place catheter in artery					
36100	N	Establish access to artery					
36120	N	Establish access to artery					
36140	N	Establish access to artery					
36145	N	Artery to vein shunt					
36160	N	Establish access to aorta					
36200	N	Place catheter in aorta					
36215	N	Place catheter in artery					
36216	N	Place catheter in artery					
36217	N	Place catheter in artery					
36218	N	Place catheter in artery					
36245	N	Place catheter in artery					
36246	N	Place catheter in artery					
36247	N	Place catheter in artery					
36248	N	Place catheter in artery					
36260	T	Insertion of infusion pump	0119	9.87	$489.59	$161.50	$97.92
36261	T	Revision of infusion pump	0124	2.55	$126.64	$81.36	$25.33
36262	T	Removal of infusion pump	0109	6.53	$323.86	$133.51	$64.77
36299	T	Vessel injection procedure	0089	78.45	$3,890.81	$2,275.19	$778.16
36400	N	Drawing blood					
36405	N	Drawing blood					
36406	N	Drawing blood					
36410	N	Drawing blood					
36415	E	Drawing blood					
36420	T	Establish access to vein	0032	5.40	$267.82	$119.52	$53.56
36425	T	Establish access to vein	0032	5.40	$267.82	$119.52	$53.56
36430	S	Blood transfusion service	0110	5.83	$289.15	$122.73	$57.83
36440	S	Blood transfusion service	0110	5.83	$289.15	$122.73	$57.83
36450	S	Exchange transfusion service	0110	5.83	$289.15	$122.73	$57.83
36455	S	Exchange transfusion service	0110	5.83	$289.15	$122.73	$57.83
36460	S	Transfusion service, fetal	0110	5.83	$289.15	$122.73	$57.83
36468	T	Injection(s), spider veins	0098	1.19	$59.02	$20.88	$11.80
36469	T	Injection(s), spider veins	0098	1.19	$59.02	$20.88	$11.80
36470	T	Injection therapy of vein	0098	1.19	$59.02	$20.88	$11.80
36471	T	Injection therapy of veins	0098	1.19	$59.02	$20.88	$11.80
36481	N	Insertion of catheter, vein					
36488	T	Insertion of catheter, vein	0032	5.40	$267.82	$119.52	$53.56
36489	T	Insertion of catheter, vein	0032	5.40	$267.82	$119.52	$53.56
36490	T	Insertion of catheter, vein	0032	5.40	$267.82	$119.52	$53.56
36491	T	Insertion of catheter, vein	0032	5.40	$267.82	$119.52	$53.56
36493	T	Repositioning of cvc	0032	5.40	$267.82	$119.52	$53.56
36500	N	Insertion of catheter, vein					
36510	C	Insertion of catheter, vein					
36520	S	Plasma and/or cell exchange	0111	14.17	$702.77	$300.74	$140.55
36521	S	Apheresis w/ adsorp/reinfuse	0111	14.17	$702.77	$300.74	$140.55
36522	S	Photopheresis	0112	39.60	$1,964.01	$663.65	$392.80
36530	T	Insertion of infusion pump	0119	9.87	$489.59	$161.50	$97.92
36531	T	Revision of infusion pump	0124	2.55	$126.64	$81.36	$25.33
36532	T	Removal of infusion pump	0109	6.53	$323.86	$133.51	$64.77
36533	T	Insertion of access device	0115	19.34	$959.19	$506.74	$191.84
36534	T	Revision of access device	0103	13.09	$649.21	$295.70	$129.84
36535	T	Removal of access device	0109	6.53	$323.86	$133.51	$64.77
*36540	N	Collect blood venous device					
36550	T	Declot vascular device	0970	0.52	$25.79		$5.16
36600	N	Withdrawal of arterial blood					
36620	N	Insertion catheter, artery					
36625	N	Insertion catheter, artery					

CPT codes and descriptions only are copyright American Medical Association. All Rights Reserved. Applicable FARS/DFARS Apply.
Copyright American Dental Association. All rights reserved.
*Code is new in 2001.

ADDENDUM B.—HOSPITAL OUTPATIENT DEPARTMENT (HOPD) PAYMENT STATUS BY HCPCS CODE AND RELATED INFORMATION—Continued

CPT/ HCPCS	HOPD Status Indicator	Description	APC	Relative Weight	Payment Rate	National Unadjusted Coinsurance	Minimum Unadjusted Coinsurance
36640	T	Insertion catheter, artery	0032	5.40	$267.82	$119.52	$53.56
36660	C	Insertion catheter, artery					
36680	T	Insert needle, bone cavity	0120	1.66	$82.33	$42.67	$16.47
36800	T	Insertion of cannula	0115	19.34	$959.19	$506.74	$191.84
36810	T	Insertion of cannula	0115	19.34	$959.19	$506.74	$191.84
36815	T	Insertion of cannula	0115	19.34	$959.19	$506.74	$191.84
36819	T	Av fusion by basilic vein	0093	12.82	$635.82	$277.34	$127.16
36821	T	Av fusion direct any site	0088	26.49	$1,313.80	$678.68	$262.76
36822	C	Insertion of cannula(s)					
36823	C	Insertion of cannula(s)					
36825	T	Artery-vein graft	0088	26.49	$1,313.80	$678.68	$262.76
36830	T	Artery-vein graft	0088	26.49	$1,313.80	$678.68	$262.76
36831	T	Av fistula excision	0088	26.49	$1,313.80	$678.68	$262.76
36832	T	Av fistula revision	0088	26.49	$1,313.80	$678.68	$262.76
36833	T	Av fistula revision	0088	26.49	$1,313.80	$678.68	$262.76
36834	T	Repair A-V aneurysm	0093	12.82	$635.82	$277.34	$127.16
36835	T	Artery to vein shunt	0115	19.34	$959.19	$506.74	$191.84
36860	T	External cannula declotting	0115	19.34	$959.19	$506.74	$191.84
36861	T	Cannula declotting	0115	19.34	$959.19	$506.74	$191.84
*36870	T	AV fistula revision, open	0093	12.82	$635.82	$277.34	$127.16
37140	C	Revision of circulation					
37145	C	Revision of circulation					
37160	C	Revision of circulation					
37180	C	Revision of circulation					
37181	C	Splice spleen/kidney veins					
37195	C	Thrombolytic therapy, stroke					
37200	T	Transcatheter biopsy	0005	5.41	$268.32	$119.75	$53.66
37201	T	Transcatheter therapy infuse	0120	1.66	$82.33	$42.67	$16.47
37202	T	Transcatheter therapy infuse	0120	1.66	$82.33	$42.67	$16.47
37203	T	Transcatheter retrieval	0103	13.09	$649.21	$295.70	$129.84
37204	T	Transcatheter occlusion	0103	13.09	$649.21	$295.70	$129.84
37205	T	Transcatheter stent	0229	34.81	$1,726.44	$1,030.12	$345.29
37206	T	Transcatheter stent add-on	0229	34.81	$1,726.44	$1,030.12	$345.29
37207	T	Transcatheter stent	0229	34.81	$1,726.44	$1,030.12	$345.29
37208	T	Transcatheter stent add-on	0229	34.81	$1,726.44	$1,030.12	$345.29
37209	T	Exchange arterial catheter	0103	13.09	$649.21	$295.70	$129.84
37250	T	Iv us first vessel add-on	0103	13.09	$649.21	$295.70	$129.84
37251	T	Iv us each add vessel add-on	0103	13.09	$649.21	$295.70	$129.84
37565	T	Ligation of neck vein	0093	12.82	$635.82	$277.34	$127.16
37600	T	Ligation of neck artery	0093	12.82	$635.82	$277.34	$127.16
37605	T	Ligation of neck artery	0091	14.79	$733.52	$348.23	$146.70
37606	T	Ligation of neck artery	0091	14.79	$733.52	$348.23	$146.70
37607	T	Ligation of a-v fistula	0092	20.21	$1,002.34	$505.37	$200.47
37609	T	Temporal artery procedure	0020	6.51	$322.87	$130.53	$64.57
37615	T	Ligation of neck artery	0091	14.79	$733.52	$348.23	$146.70
37616	C	Ligation of chest artery					
37617	C	Ligation of abdomen artery					
37618	C	Ligation of extremity artery					
37620	T	Revision of major vein	0091	14.79	$733.52	$348.23	$146.70
37650	T	Revision of major vein	0091	14.79	$733.52	$348.23	$146.70
37660	C	Revision of major vein					
37700	T	Revise leg vein	0091	14.79	$733.52	$348.23	$146.70
37720	T	Removal of leg vein	0092	20.21	$1,002.34	$505.37	$200.47
37730	T	Removal of leg veins	0092	20.21	$1,002.34	$505.37	$200.47
37735	T	Removal of leg veins/lesion	0092	20.21	$1,002.34	$505.37	$200.47
37760	T	Revision of leg veins	0091	14.79	$733.52	$348.23	$146.70
37780	T	Revision of leg vein	0091	14.79	$733.52	$348.23	$146.70
37785	T	Revise secondary varicosity	0091	14.79	$733.52	$348.23	$146.70
37788	C	Revascularization, penis					
37790	T	Penile venous occlusion	0181	32.37	$1,605.43	$906.36	$321.09
37799	T	Vascular surgery procedure	0020	6.51	$322.87	$130.53	$64.57
38100	C	Removal of spleen, total					
38101	C	Removal of spleen, partial					
38102	C	Removal of spleen, total					
38115	C	Repair of ruptured spleen					
38120	T	Laparoscopy, splenectomy	0131	41.81	$2,073.61	$1,089.88	$414.72
38129	T	Laparoscope proc, spleen	0130	25.36	$1,257.75	$659.53	$251.55
38200	N	Injection for spleen x-ray					
38230	S	Bone marrow collection	0123	4.13	$204.83	$40.97	$40.97
38231	S	Stem cell collection	0111	14.17	$702.77	$300.74	$140.55
38240	S	Bone marrow/stem transplant	0123	4.13	$204.83	$40.97	$40.97
38241	S	Bone marrow/stem transplant	0123	4.13	$204.83	$40.97	$40.97
38300	T	Drainage, lymph node lesion	0008	6.15	$305.02	$113.67	$61.00
38305	T	Drainage, lymph node lesion	0008	6.15	$305.02	$113.67	$61.00

CPT codes and descriptions only are copyright American Medical Association. All Rights Reserved. Applicable FARS/DFARS Apply.
Copyright American Dental Association. All rights reserved.
*Code is new in 2001.

ADDENDUM B.—HOSPITAL OUTPATIENT DEPARTMENT (HOPD) PAYMENT STATUS BY HCPCS CODE AND RELATED INFORMATION—Continued

CPT/ HCPCS	HOPD Status Indicator	Description	APC	Relative Weight	Payment Rate	National Unadjusted Coinsurance	Minimum Unadjusted Coinsurance
38308	T	Incision of lymph channels	0113	13.89	$688.89	$326.55	$137.78
38380	C	Thoracic duct procedure					
38381	C	Thoracic duct procedure					
38382	C	Thoracic duct procedure					
38500	T	Biopsy/removal, lymph nodes	0113	13.89	$688.89	$326.55	$137.78
38505	T	Needle biopsy, lymph nodes	0005	5.41	$268.32	$119.75	$53.66
38510	T	Biopsy/removal, lymph nodes	0113	13.89	$688.89	$326.55	$137.78
38520	T	Biopsy/removal, lymph nodes	0113	13.89	$688.89	$326.55	$137.78
38525	T	Biopsy/removal, lymph nodes	0113	13.89	$688.89	$326.55	$137.78
38530	T	Biopsy/removal, lymph nodes	0113	13.89	$688.89	$326.55	$137.78
38542	T	Explore deep node(s), neck	0114	19.56	$970.10	$493.78	$194.02
38550	T	Removal, neck/armpit lesion	0113	13.89	$688.89	$326.55	$137.78
38555	T	Removal, neck/armpit lesion	0114	19.56	$970.10	$493.78	$194.02
38562	C	Removal, pelvic lymph nodes					
38564	C	Removal, abdomen lymph nodes					
38570	T	Laparoscopy, lymph node biop	0131	41.81	$2,073.61	$1,089.88	$414.72
38571	T	Laparoscopy, lymphadenectomy	0132	48.91	$2,425.74	$1,239.22	$485.15
38572	T	Laparoscopy, lymphadenectomy	0131	41.81	$2,073.61	$1,089.88	$414.72
38589	T	Laparoscope proc, lymphatic	0130	25.36	$1,257.75	$659.53	$251.55
38700	C	Removal of lymph nodes, neck					
38720	T	Removal of lymph nodes, neck	0114	19.56	$970.10	$493.78	$194.02
38724	C	Removal of lymph nodes, neck					
38740	T	Remove armpit lymph nodes	0114	19.56	$970.10	$493.78	$194.02
38745	T	Remove armpit lymph nodes	0114	19.56	$970.10	$493.78	$194.02
38746	C	Remove thoracic lymph nodes					
38747	C	Remove abdominal lymph nodes					
38760	T	Remove groin lymph nodes	0114	19.56	$970.10	$493.78	$194.02
38765	C	Remove groin lymph nodes					
38770	C	Remove pelvis lymph nodes					
38780	C	Remove abdomen lymph nodes					
38790	N	Inject for lymphatic x-ray					
38792	N	Identify sentinel node					
38794	N	Access thoracic lymph duct					
38999	T	Blood/lymph system procedure	0008	6.15	$305.02	$113.67	$61.00
39000	C	Exploration of chest					
39010	C	Exploration of chest					
39200	C	Removal chest lesion					
39220	C	Removal chest lesion					
39400	T	Visualization of chest	0076	8.06	$399.75	$197.05	$79.95
39499	C	Chest procedure					
39501	C	Repair diaphragm laceration					
39502	C	Repair paraesophageal hernia					
39503	C	Repair of diaphragm hernia					
39520	C	Repair of diaphragm hernia					
39530	C	Repair of diaphragm hernia					
39531	C	Repair of diaphragm hernia					
39540	C	Repair of diaphragm hernia					
39541	C	Repair of diaphragm hernia					
39545	C	Revision of diaphragm					
39560	C	Resect diaphragm, simple					
39561	C	Resect diaphragm, complex					
39599	C	Diaphragm surgery procedure					
40490	T	Biopsy of lip	0252	5.18	$256.90	$114.24	$51.38
40500	T	Partial excision of lip	0253	12.02	$596.14	$284.00	$119.23
40510	T	Partial excision of lip	0254	12.45	$617.47	$272.41	$123.49
40520	T	Partial excision of lip	0253	12.02	$596.14	$284.00	$119.23
40525	T	Reconstruct lip with flap	0254	12.45	$617.47	$272.41	$123.49
40527	T	Reconstruct lip with flap	0254	12.45	$617.47	$272.41	$123.49
40530	T	Partial removal of lip	0254	12.45	$617.47	$272.41	$123.49
40650	T	Repair lip	0253	12.02	$596.14	$284.00	$119.23
40652	T	Repair lip	0253	12.02	$596.14	$284.00	$119.23
40654	T	Repair lip	0254	12.45	$617.47	$272.41	$123.49
40700	T	Repair cleft lip/nasal	0256	25.40	$1,259.74	$623.05	$251.95
40701	T	Repair cleft lip/nasal	0256	25.40	$1,259.74	$623.05	$251.95
40702	T	Repair cleft lip/nasal	0256	25.40	$1,259.74	$623.05	$251.95
40720	T	Repair cleft lip/nasal	0256	25.40	$1,259.74	$623.05	$251.95
40761	T	Repair cleft lip/nasal	0256	25.40	$1,259.74	$623.05	$251.95
40799	T	Lip surgery procedure	0253	12.02	$596.14	$284.00	$119.23
40800	T	Drainage of mouth lesion	0251	1.68	$83.32	$27.99	$16.66
40801	T	Drainage of mouth lesion	0252	5.18	$256.90	$114.24	$51.38
40804	T	Removal, foreign body, mouth	0251	1.68	$83.32	$27.99	$16.66
40805	T	Removal, foreign body, mouth	0252	5.18	$256.90	$114.24	$51.38
40806	T	Incision of lip fold	0251	1.68	$83.32	$27.99	$16.66
40808	T	Biopsy of mouth lesion	0251	1.68	$83.32	$27.99	$16.66

CPT codes and descriptions only are copyright American Medical Association. All Rights Reserved. Applicable FARS/DFARS Apply.
Copyright American Dental Association. All rights reserved.
*Code is new in 2001.

ADDENDUM B.—HOSPITAL OUTPATIENT DEPARTMENT (HOPD) PAYMENT STATUS BY HCPCS CODE AND RELATED INFORMATION—Continued

CPT/ HCPCS	HOPD Status Indicator	Description	APC	Relative Weight	Payment Rate	National Unadjusted Coinsurance	Minimum Unadjusted Coinsurance
40810	T	Excision of mouth lesion	0253	12.02	$596.14	$284.00	$119.23
40812	T	Excise/repair mouth lesion	0252	5.18	$256.90	$114.24	$51.38
40814	T	Excise/repair mouth lesion	0253	12.02	$596.14	$284.00	$119.23
40816	T	Excision of mouth lesion	0253	12.02	$596.14	$284.00	$119.23
40818	T	Excise oral mucosa for graft	0251	1.68	$83.32	$27.99	$16.66
40819	T	Excise lip or cheek fold	0252	5.18	$256.90	$114.24	$51.38
40820	T	Treatment of mouth lesion	0253	12.02	$596.14	$284.00	$119.23
40830	T	Repair mouth laceration	0251	1.68	$83.32	$27.99	$16.66
40831	T	Repair mouth laceration	0253	12.02	$596.14	$284.00	$119.23
40840	T	Reconstruction of mouth	0254	12.45	$617.47	$272.41	$123.49
40842	T	Reconstruction of mouth	0254	12.45	$617.47	$272.41	$123.49
40843	T	Reconstruction of mouth	0254	12.45	$617.47	$272.41	$123.49
40844	T	Reconstruction of mouth	0256	25.40	$1,259.74	$623.05	$251.95
40845	T	Reconstruction of mouth	0256	25.40	$1,259.74	$623.05	$251.95
40899	T	Mouth surgery procedure	0252	5.18	$256.90	$114.24	$51.38
41000	T	Drainage of mouth lesion	0253	12.02	$596.14	$284.00	$119.23
41005	T	Drainage of mouth lesion	0251	1.68	$83.32	$27.99	$16.66
41006	T	Drainage of mouth lesion	0253	12.02	$596.14	$284.00	$119.23
41007	T	Drainage of mouth lesion	0253	12.02	$596.14	$284.00	$119.23
41008	T	Drainage of mouth lesion	0253	12.02	$596.14	$284.00	$119.23
41009	T	Drainage of mouth lesion	0251	1.68	$83.32	$27.99	$16.66
41010	T	Incision of tongue fold	0253	12.02	$596.14	$284.00	$119.23
41015	T	Drainage of mouth lesion	0252	5.18	$256.90	$114.24	$51.38
41016	T	Drainage of mouth lesion	0253	12.02	$596.14	$284.00	$119.23
41017	T	Drainage of mouth lesion	0253	12.02	$596.14	$284.00	$119.23
41018	T	Drainage of mouth lesion	0253	12.02	$596.14	$284.00	$119.23
41100	T	Biopsy of tongue	0252	5.18	$256.90	$114.24	$51.38
41105	T	Biopsy of tongue	0253	12.02	$596.14	$284.00	$119.23
41108	T	Biopsy of floor of mouth	0252	5.18	$256.90	$114.24	$51.38
41110	T	Excision of tongue lesion	0253	12.02	$596.14	$284.00	$119.23
41112	T	Excision of tongue lesion	0253	12.02	$596.14	$284.00	$119.23
41113	T	Excision of tongue lesion	0253	12.02	$596.14	$284.00	$119.23
41114	T	Excision of tongue lesion	0254	12.45	$617.47	$272.41	$123.49
41115	T	Excision of tongue fold	0253	12.02	$596.14	$284.00	$119.23
41116	T	Excision of mouth lesion	0253	12.02	$596.14	$284.00	$119.23
41120	T	Partial removal of tongue	0256	25.40	$1,259.74	$623.05	$251.95
41130	C	Partial removal of tongue					
41135	C	Tongue and neck surgery					
41140	C	Removal of tongue					
41145	C	Tongue removal, neck surgery					
41150	C	Tongue, mouth, jaw surgery					
41153	C	Tongue, mouth, neck surgery					
41155	C	Tongue, jaw, & neck surgery					
41250	T	Repair tongue laceration	0251	1.68	$83.32	$27.99	$16.66
41251	T	Repair tongue laceration	0253	12.02	$596.14	$284.00	$119.23
41252	T	Repair tongue laceration	0253	12.02	$596.14	$284.00	$119.23
41500	T	Fixation of tongue	0253	12.02	$596.14	$284.00	$119.23
41510	T	Tongue to lip surgery	0253	12.02	$596.14	$284.00	$119.23
41520	T	Reconstruction, tongue fold	0253	12.02	$596.14	$284.00	$119.23
41599	T	Tongue and mouth surgery	0251	1.68	$83.32	$27.99	$16.66
41800	T	Drainage of gum lesion	0251	1.68	$83.32	$27.99	$16.66
41805	T	Removal foreign body, gum	0253	12.02	$596.14	$284.00	$119.23
41806	T	Removal foreign body,jawbone	0253	12.02	$596.14	$284.00	$119.23
41820	T	Excision, gum, each quadrant	0252	5.18	$256.90	$114.24	$51.38
41821	T	Excision of gum flap	0252	5.18	$256.90	$114.24	$51.38
41822	T	Excision of gum lesion	0253	12.02	$596.14	$284.00	$119.23
41823	T	Excision of gum lesion	0253	12.02	$596.14	$284.00	$119.23
41825	T	Excision of gum lesion	0253	12.02	$596.14	$284.00	$119.23
41826	T	Excision of gum lesion	0253	12.02	$596.14	$284.00	$119.23
41827	T	Excision of gum lesion	0253	12.02	$596.14	$284.00	$119.23
41828	T	Excision of gum lesion	0253	12.02	$596.14	$284.00	$119.23
41830	T	Removal of gum tissue	0253	12.02	$596.14	$284.00	$119.23
41850	T	Treatment of gum lesion	0253	12.02	$596.14	$284.00	$119.23
41870	T	Gum graft	0253	12.02	$596.14	$284.00	$119.23
41872	T	Repair gum	0253	12.02	$596.14	$284.00	$119.23
41874	T	Repair tooth socket	0253	12.02	$596.14	$284.00	$119.23
41899	T	Dental surgery procedure	0253	12.02	$596.14	$284.00	$119.23
42000	T	Drainage mouth roof lesion	0251	1.68	$83.32	$27.99	$16.66
42100	T	Biopsy roof of mouth	0252	5.18	$256.90	$114.24	$51.38
42104	T	Excision lesion, mouth roof	0253	12.02	$596.14	$284.00	$119.23
42106	T	Excision lesion, mouth roof	0253	12.02	$596.14	$284.00	$119.23
42107	T	Excision lesion, mouth roof	0254	12.45	$617.47	$272.41	$123.49
42120	T	Remove palate/lesion	0256	25.40	$1,259.74	$623.05	$251.95
42140	T	Excision of uvula	0252	5.18	$256.90	$114.24	$51.38

CPT codes and descriptions only are copyright American Medical Association. All Rights Reserved. Applicable FARS/DFARS Apply.
Copyright American Dental Association. All rights reserved.
*Code is new in 2001.

ADDENDUM B.—HOSPITAL OUTPATIENT DEPARTMENT (HOPD) PAYMENT STATUS BY HCPCS CODE AND RELATED INFORMATION—Continued

CPT/ HCPCS	HOPD Status Indicator	Description	APC	Relative Weight	Payment Rate	National Unadjusted Coinsurance	Minimum Unadjusted Coinsurance
42145	T	Repair palate, pharynx/uvula	0254	12.45	$617.47	$272.41	$123.49
42160	T	Treatment mouth roof lesion	0253	12.02	$596.14	$284.00	$119.23
42180	T	Repair palate	0251	1.68	$83.32	$27.99	$16.66
42182	T	Repair palate	0256	25.40	$1,259.74	$623.05	$251.95
42200	T	Reconstruct cleft palate	0256	25.40	$1,259.74	$623.05	$251.95
42205	T	Reconstruct cleft palate	0256	25.40	$1,259.74	$623.05	$251.95
42210	T	Reconstruct cleft palate	0256	25.40	$1,259.74	$623.05	$251.95
42215	T	Reconstruct cleft palate	0256	25.40	$1,259.74	$623.05	$251.95
42220	T	Reconstruct cleft palate	0256	25.40	$1,259.74	$623.05	$251.95
42225	T	Reconstruct cleft palate	0256	25.40	$1,259.74	$623.05	$251.95
42226	T	Lengthening of palate	0256	25.40	$1,259.74	$623.05	$251.95
42227	T	Lengthening of palate	0256	25.40	$1,259.74	$623.05	$251.95
42235	T	Repair palate	0254	12.45	$617.47	$272.41	$123.49
42260	T	Repair nose to lip fistula	0253	12.02	$596.14	$284.00	$119.23
42280	T	Preparation, palate mold	0251	1.68	$83.32	$27.99	$16.66
42281	T	Insertion, palate prosthesis	0253	12.02	$596.14	$284.00	$119.23
42299	T	Palate/uvula surgery	0251	1.68	$83.32	$27.99	$16.66
42300	T	Drainage of salivary gland	0253	12.02	$596.14	$284.00	$119.23
42305	T	Drainage of salivary gland	0253	12.02	$596.14	$284.00	$119.23
42310	T	Drainage of salivary gland	0251	1.68	$83.32	$27.99	$16.66
42320	T	Drainage of salivary gland	0251	1.68	$83.32	$27.99	$16.66
42325	T	Create salivary cyst drain	0252	5.18	$256.90	$114.24	$51.38
42326	T	Create salivary cyst drain	0252	5.18	$256.90	$114.24	$51.38
42330	T	Removal of salivary stone	0252	5.18	$256.90	$114.24	$51.38
42335	T	Removal of salivary stone	0253	12.02	$596.14	$284.00	$119.23
42340	T	Removal of salivary stone	0253	12.02	$596.14	$284.00	$119.23
42400	T	Biopsy of salivary gland	0004	1.84	$91.26	$32.57	$18.25
42405	T	Biopsy of salivary gland	0253	12.02	$596.14	$284.00	$119.23
42408	T	Excision of salivary cyst	0253	12.02	$596.14	$284.00	$119.23
42409	T	Drainage of salivary cyst	0253	12.02	$596.14	$284.00	$119.23
42410	T	Excise parotid gland/lesion	0256	25.40	$1,259.74	$623.05	$251.95
42415	T	Excise parotid gland/lesion	0256	25.40	$1,259.74	$623.05	$251.95
42420	T	Excise parotid gland/lesion	0256	25.40	$1,259.74	$623.05	$251.95
42425	T	Excise parotid gland/lesion	0256	25.40	$1,259.74	$623.05	$251.95
42426	C	Excise parotid gland/lesion					
42440	T	Excise submaxillary gland	0256	25.40	$1,259.74	$623.05	$251.95
42450	T	Excise sublingual gland	0253	12.02	$596.14	$284.00	$119.23
42500	T	Repair salivary duct	0254	12.45	$617.47	$272.41	$123.49
42505	T	Repair salivary duct	0256	25.40	$1,259.74	$623.05	$251.95
42507	T	Parotid duct diversion	0256	25.40	$1,259.74	$623.05	$251.95
42508	T	Parotid duct diversion	0256	25.40	$1,259.74	$623.05	$251.95
42509	T	Parotid duct diversion	0256	25.40	$1,259.74	$623.05	$251.95
42510	T	Parotid duct diversion	0256	25.40	$1,259.74	$623.05	$251.95
42550	N	Injection for salivary x-ray					
42600	T	Closure of salivary fistula	0253	12.02	$596.14	$284.00	$119.23
42650	T	Dilation of salivary duct	0252	5.18	$256.90	$114.24	$51.38
42660	T	Dilation of salivary duct	0252	5.18	$256.90	$114.24	$51.38
42665	T	Ligation of salivary duct	0253	12.02	$596.14	$284.00	$119.23
42699	T	Salivary surgery procedure	0253	12.02	$596.14	$284.00	$119.23
42700	T	Drainage of tonsil abscess	0251	1.68	$83.32	$27.99	$16.66
42720	T	Drainage of throat abscess	0253	12.02	$596.14	$284.00	$119.23
42725	T	Drainage of throat abscess	0256	25.40	$1,259.74	$623.05	$251.95
42800	T	Biopsy of throat	0252	5.18	$256.90	$114.24	$51.38
42802	T	Biopsy of throat	0253	12.02	$596.14	$284.00	$119.23
42804	T	Biopsy of upper nose/throat	0253	12.02	$596.14	$284.00	$119.23
42806	T	Biopsy of upper nose/throat	0253	12.02	$596.14	$284.00	$119.23
42808	T	Excise pharynx lesion	0253	12.02	$596.14	$284.00	$119.23
42809	T	Remove pharynx foreign body	0251	1.68	$83.32	$27.99	$16.66
42810	T	Excision of neck cyst	0253	12.02	$596.14	$284.00	$119.23
42815	T	Excision of neck cyst	0256	25.40	$1,259.74	$623.05	$251.95
42820	T	Remove tonsils and adenoids	0258	18.62	$923.48	$462.81	$184.70
42821	T	Remove tonsils and adenoids	0258	18.62	$923.48	$462.81	$184.70
42825	T	Removal of tonsils	0258	18.62	$923.48	$462.81	$184.70
42826	T	Removal of tonsils	0258	18.62	$923.48	$462.81	$184.70
42830	T	Removal of adenoids	0258	18.62	$923.48	$462.81	$184.70
42831	T	Removal of adenoids	0258	18.62	$923.48	$462.81	$184.70
42835	T	Removal of adenoids	0258	18.62	$923.48	$462.81	$184.70
42836	T	Removal of adenoids	0258	18.62	$923.48	$462.81	$184.70
42842	C	Extensive surgery of throat					
42844	T	Extensive surgery of throat	0256	25.40	$1,259.74	$623.05	$251.95
42845	C	Extensive surgery of throat					
42860	T	Excision of tonsil tags	0258	18.62	$923.48	$462.81	$184.70
42870	T	Excision of lingual tonsil	0258	18.62	$923.48	$462.81	$184.70
42890	T	Partial removal of pharynx	0256	25.40	$1,259.74	$623.05	$251.95

CPT codes and descriptions only are copyright American Medical Association. All Rights Reserved. Applicable FARS/DFARS Apply.
Copyright American Dental Association. All rights reserved.
*Code is new in 2001.

ADDENDUM B.—HOSPITAL OUTPATIENT DEPARTMENT (HOPD) PAYMENT STATUS BY HCPCS CODE AND RELATED INFORMATION—Continued

CPT/ HCPCS	HOPD Status Indicator	Description	APC	Relative Weight	Payment Rate	National Unadjusted Coinsurance	Minimum Unadjusted Coinsurance
42892	T	Revision of pharyngeal walls	0256	25.40	$1,259.74	$623.05	$251.95
42894	C	Revision of pharyngeal walls					
42900	T	Repair throat wound	0253	12.02	$596.14	$284.00	$119.23
42950	T	Reconstruction of throat	0254	12.45	$617.47	$272.41	$123.49
42953	C	Repair throat, esophagus					
42955	T	Surgical opening of throat	0254	12.45	$617.47	$272.41	$123.49
42960	T	Control throat bleeding	0250	2.21	$109.61	$38.54	$21.92
42961	C	Control throat bleeding					
42962	T	Control throat bleeding	0256	25.40	$1,259.74	$623.05	$251.95
42970	T	Control nose/throat bleeding	0250	2.21	$109.61	$38.54	$21.92
42971	C	Control nose/throat bleeding					
42972	T	Control nose/throat bleeding	0253	12.02	$596.14	$284.00	$119.23
42999	T	Throat surgery procedure	0252	5.18	$256.90	$114.24	$51.38
43020	T	Incision of esophagus	0254	12.45	$617.47	$272.41	$123.49
43030	C	Throat muscle surgery					
43045	C	Incision of esophagus					
43100	C	Excision of esophagus lesion					
43101	C	Excision of esophagus lesion					
43107	C	Removal of esophagus					
43108	C	Removal of esophagus					
43112	C	Removal of esophagus					
43113	C	Removal of esophagus					
43116	C	Partial removal of esophagus					
43117	C	Partial removal of esophagus					
43118	C	Partial removal of esophagus					
43121	C	Partial removal of esophagus					
43122	C	Parital removal of esophagus					
43123	C	Partial removal of esophagus					
43124	C	Removal of esophagus					
43130	T	Removal of esophagus pouch	0254	12.45	$617.47	$272.41	$123.49
43135	C	Removal of esophagus pouch					
43200	T	Esophagus endoscopy	0141	7.15	$354.61	$184.67	$70.92
43202	T	Esophagus endoscopy, biopsy	0141	7.15	$354.61	$184.67	$70.92
43204	T	Esophagus endoscopy & inject	0141	7.15	$354.61	$184.67	$70.92
43205	T	Esophagus endoscopy/ligation	0141	7.15	$354.61	$184.67	$70.92
43215	T	Esophagus endoscopy	0141	7.15	$354.61	$184.67	$70.92
43216	T	Esophagus endoscopy/lesion	0141	7.15	$354.61	$184.67	$70.92
43217	T	Esophagus endoscopy	0141	7.15	$354.61	$184.67	$70.92
43219	T	Esophagus endoscopy	0141	7.15	$354.61	$184.67	$70.92
43220	T	Esoph endoscopy, dilation	0141	7.15	$354.61	$184.67	$70.92
43226	T	Esoph endoscopy, dilation	0141	7.15	$354.61	$184.67	$70.92
43227	T	Esoph endoscopy, repair	0141	7.15	$354.61	$184.67	$70.92
43228	T	Esoph endoscopy, ablation	0141	7.15	$354.61	$184.67	$70.92
*43231	T	Esoph endoscopy w/ US exam	0141	7.15	$354.61	$184.67	$70.92
*43232	T	Esoph endoscopy w/ US fn bx	0141	7.15	$354.61	$184.67	$70.92
43234	T	Upper GI endoscopy, exam	0141	7.15	$354.61	$184.67	$70.92
43235	T	Uppr gi endoscopy, diagnosis	0141	7.15	$354.61	$184.67	$70.92
43239	T	Upper GI endoscopy, biopsy	0141	7.15	$354.61	$184.67	$70.92
*43240	T	Esoph endoscopy w/ drain cyst	0141	7.15	$354.61	$184.67	$70.92
43241	T	Upper GI endoscopy with tube	0141	7.15	$354.61	$184.67	$70.92
*43242	T	Uppr GI endoscopy w/ US fn bx	0141	7.15	$354.61	$184.67	$70.92
43243	T	Upper GI endoscopy & inject	0141	7.15	$354.61	$184.67	$70.92
43244	T	Upper GI endoscopy/ligation	0141	7.15	$354.61	$184.67	$70.92
43245	T	Operative upper GI endoscopy	0141	7.15	$354.61	$184.67	$70.92
43246	T	Place gastrostomy tube	0141	7.15	$354.61	$184.67	$70.92
43247	T	Operative upper GI endoscopy	0141	7.15	$354.61	$184.67	$70.92
43248	T	Uppr gi endoscopy/guide wire	0141	7.15	$354.61	$184.67	$70.92
43249	T	Esoph endoscopy, dilation	0141	7.15	$354.61	$184.67	$70.92
43250	T	Upper GI endoscopy/tumor	0141	7.15	$354.61	$184.67	$70.92
43251	T	Operative upper GI endoscopy	0141	7.15	$354.61	$184.67	$70.92
43255	T	Operative upper GI endoscopy	0141	7.15	$354.61	$184.67	$70.92
*43256	T	Uppr GI endoscopy w/ stent	0141	7.15	$354.61	$184.67	$70.92
43258	T	Operative upper GI endoscopy	0141	7.15	$354.61	$184.67	$70.92
43259	T	Endoscopic ultrasound exam	0141	7.15	$354.61	$184.67	$70.92
43260	T	Endo cholangiopancreatograph	0151	10.53	$522.25	$245.46	$104.45
43261	T	Endo cholangiopancreatograph	0151	10.53	$522.25	$245.46	$104.45
43262	T	Endo cholangiopancreatograph	0151	10.53	$522.25	$245.46	$104.45
43263	T	Endo cholangiopancreatograph	0151	10.53	$522.25	$245.46	$104.45
43264	T	Endo cholangiopancreatograph	0151	10.53	$522.25	$245.46	$104.45
43265	T	Endo cholangiopancreatograph	0151	10.53	$522.25	$245.46	$104.45
43267	T	Endo cholangiopancreatograph	0151	10.53	$522.25	$245.46	$104.45
43268	T	Endo cholangiopancreatograph	0151	10.53	$522.25	$245.46	$104.45
43269	T	Endo cholangiopancreatograph	0151	10.53	$522.25	$245.46	$104.45
43271	T	Endo cholangiopancreatograph	0151	10.53	$522.25	$245.46	$104.45

CPT codes and descriptions only are copyright American Medical Association. All Rights Reserved. Applicable FARS/DFARS Apply.
Copyright American Dental Association. All rights reserved.
*Code is new in 2001.

ADDENDUM B.—HOSPITAL OUTPATIENT DEPARTMENT (HOPD) PAYMENT STATUS BY HCPCS CODE AND RELATED INFORMATION—Continued

CPT/ HCPCS	HOPD Status Indicator	Description	APC	Relative Weight	Payment Rate	National Unadjusted Coinsurance	Minimum Unadjusted Coinsurance
43272	T	Endo cholangiopancreatograph	0151	10.53	$522.25	$245.46	$104.45
43280	T	Laparoscopy, fundoplasty	0132	48.91	$2,425.74	$1,239.22	$485.15
43289	T	Laparoscope proc, esoph	0130	25.36	$1,257.75	$659.53	$251.55
43300	C	Repair of esophagus					
43305	C	Repair esophagus and fistula					
43310	C	Repair of esophagus					
43312	C	Repair esophagus and fistula					
43320	C	Fuse esophagus & stomach					
43324	C	Revise esophagus & stomach					
43325	C	Revise esophagus & stomach					
43326	C	Revise esophagus & stomach					
43330	C	Repair of esophagus					
43331	C	Repair of esophagus					
43340	C	Fuse esophagus & intestine					
43341	C	Fuse esophagus & intestine					
43350	C	Surgical opening, esophagus					
43351	C	Surgical opening, esophagus					
43352	C	Surgical opening, esophagus					
43360	C	Gastrointestinal repair					
43361	C	Gastrointestinal repair					
*44383	T	Ileoscopy through stoma w/stent	0142	7.45	$369.49	$162.42	$73.90
43400	C	Ligate esophagus veins					
43401	C	Esophagus surgery for veins					
43405	C	Ligate/staple esophagus					
43410	C	Repair esophagus wound					
43415	C	Repair esophagus wound					
43420	C	Repair esophagus opening					
43425	C	Repair esophagus opening					
43450	T	Dilate esophagus	0140	4.74	$235.09	$107.24	$47.02
43453	T	Dilate esophagus	0140	4.74	$235.09	$107.24	$47.02
43456	T	Dilate esophagus	0140	4.74	$235.09	$107.24	$47.02
43458	T	Dilate esophagus	0140	4.74	$235.09	$107.24	$47.02
43460	C	Pressure treatment esophagus					
43496	C	Free jejunum flap, microvasc					
43499	T	Esophagus surgery procedure	0140	4.74	$235.09	$107.24	$47.02
43500	C	Surgical opening of stomach					
43501	C	Surgical repair of stomach					
43502	C	Surgical repair of stomach					
43510	C	Surgical opening of stomach					
43520	C	Incision of pyloric muscle					
43600	T	Biopsy of stomach	0141	7.15	$354.61	$184.67	$70.92
43605	C	Biopsy of stomach					
43610	C	Excision of stomach lesion					
43611	C	Excision of stomach lesion					
43620	C	Removal of stomach					
43621	C	Removal of stomach					
43622	C	Removal of stomach					
43631	C	Removal of stomach, partial					
43632	C	Removal of stomach, partial					
43633	C	Removal of stomach, partial					
43634	C	Removal of stomach, partial					
43635	C	Removal of stomach, partial					
43638	C	Removal of stomach, partial					
43639	C	Removal of stomach, partial					
43640	C	Vagotomy & pylorus repair					
43641	C	Vagotomy & pylorus repair					
43651	T	Laparoscopy, vagus nerve	0132	48.91	$2,425.74	$1,239.22	$485.15
43652	T	Laparoscopy, vagus nerve	0132	48.91	$2,425.74	$1,239.22	$485.15
43653	T	Laparoscopy, gastrostomy	0131	41.81	$2,073.61	$1,089.88	$414.72
43659	T	Laparoscope proc, stom	0130	25.36	$1,257.75	$659.53	$251.55
*43752	E	Nasal/orogastric w/stent					
43750	T	Place gastrostomy tube	0141	7.15	$354.61	$184.67	$70.92
43760	T	Change gastrostomy tube	0121	2.36	$117.05	$52.53	$23.41
43761	T	Reposition gastrostomy tube	0121	2.36	$117.05	$52.53	$23.41
43800	C	Reconstruction of pylorus					
43810	C	Fusion of stomach and bowel					
43820	C	Fusion of stomach and bowel					
43825	C	Fusion of stomach and bowel					
43830	T	Place gastrostomy tube	0141	7.15	$354.61	$184.67	$70.92
43831	T	Place gastrostomy tube	0141	7.15	$354.61	$184.67	$70.92
43832	C	Place gastrostomy tube					
43840	C	Repair of stomach lesion					
43842	C	Gastroplasty for obesity					
43843	C	Gastroplasty for obesity					

CPT codes and descriptions only are copyright American Medical Association. All Rights Reserved. Applicable FARS/DFARS Apply.
Copyright American Dental Association. All rights reserved.
*Code is new in 2001.

ADDENDUM B.—HOSPITAL OUTPATIENT DEPARTMENT (HOPD) PAYMENT STATUS BY HCPCS CODE AND RELATED INFORMATION—Continued

CPT/ HCPCS	HOPD Status Indicator	Description	APC	Relative Weight	Payment Rate	National Unadjusted Coinsurance	Minimum Unadjusted Coinsurance
43846	C	Gastric bypass for obesity					
43847	C	Gastric bypass for obesity					
43848	C	Revision gastroplasty					
43850	C	Revise stomach-bowel fusion					
43855	C	Revise stomach-bowel fusion					
43860	C	Revise stomach-bowel fusion					
43865	C	Revise stomach-bowel fusion					
43870	T	Repair stomach opening	0025	3.74	$185.49	$70.66	$37.10
43880	C	Repair stomach-bowel fistula					
43999	T	Stomach surgery procedure	0121	2.36	$117.05	$52.53	$23.41
44005	C	Freeing of bowel adhesion					
44010	C	Incision of small bowel					
44015	C	Insert needle cath bowel					
44020	C	Exploration of small bowel					
44021	C	Decompress small bowel					
44025	C	Incision of large bowel					
44050	C	Reduce bowel obstruction					
44055	C	Correct malrotation of bowel					
44100	T	Biopsy of bowel	0141	7.15	$354.61	$184.67	$70.92
44110	C	Excision of bowel lesion(s)					
44111	C	Excision of bowel lesion(s)					
44120	C	Removal of small intestine					
44121	C	Removal of small intestine					
44125	C	Removal of small intestine					
44130	C	Bowel to bowel fusion					
*44132	C	Enterectomy, cadaver donor					
*44133	C	Enterectomy, live donor					
*44135	C	Intestine transplnt, cadaver					
*44136	C	Intestine transplnt, live					
44139	C	Mobilization of colon					
44140	C	Partial removal of colon					
44141	C	Partial removal of colon					
44143	C	Partial removal of colon					
44144	C	Partial removal of colon					
44145	C	Partial removal of colon					
44146	C	Partial removal of colon					
44147	C	Partial removal of colon					
44150	C	Removal of colon					
44151	C	Removal of colon/ileostomy					
44152	C	Removal of colon/ileostomy					
44153	C	Removal of colon/ileostomy					
44155	C	Removal of colon/ileostomy					
44156	C	Removal of colon/ileostomy					
44160	C	Removal of colon					
44200	T	Laparoscopy, enterolysis	0131	41.81	$2,073.61	$1,089.88	$414.72
44201	T	Laparoscopy, jejunostomy	0131	41.81	$2,073.61	$1,089.88	$414.72
44202	C	Laparo, resect intestine					
44209	T	Laparoscope proc, intestine	0130	25.36	$1,257.75	$659.53	$251.55
44300	C	Open bowel to skin					
44310	C	Ileostomy/jejunostomy					
44312	T	Revision of ileostomy	0026	12.11	$600.61	$277.92	$120.12
44314	C	Revision of ileostomy					
44316	C	Devise bowel pouch					
44320	C	Colostomy					
44322	C	Colostomy with biopsies					
44340	T	Revision of colostomy	0026	12.11	$600.61	$277.92	$120.12
44345	C	Revision of colostomy					
44346	C	Revision of colostomy					
44360	T	Small bowel endoscopy	0142	7.45	$369.49	$162.42	$73.90
44361	T	Small bowel endoscopy/biopsy	0142	7.45	$369.49	$162.42	$73.90
44363	T	Small bowel endoscopy	0142	7.45	$369.49	$162.42	$73.90
44364	T	Small bowel endoscopy	0142	7.45	$369.49	$162.42	$73.90
44365	T	Small bowel endoscopy	0142	7.45	$369.49	$162.42	$73.90
44366	T	Small bowel endoscopy	0142	7.45	$369.49	$162.42	$73.90
44369	T	Small bowel endoscopy	0142	7.45	$369.49	$162.42	$73.90
*44370	T	Small bowel endoscopy/stent	0142	7.45	$369.49	$162.42	$73.90
44372	T	Small bowel endoscopy	0142	7.45	$369.49	$162.42	$73.90
44373	T	Small bowel endoscopy	0142	7.45	$369.49	$162.42	$73.90
44376	T	Small bowel endoscopy	0142	7.45	$369.49	$162.42	$73.90
44377	T	Small bowel endoscopy/biopsy	0142	7.45	$369.49	$162.42	$73.90
44378	T	Small bowel endoscopy	0142	7.45	$369.49	$162.42	$73.90
*44379	T	Small bowel endoscopy/stent	0142	7.45	$369.49	$162.42	$73.90
44380	T	Small bowel endoscopy	0142	7.45	$369.49	$162.42	$73.90
44382	T	Small bowel endoscopy	0142	7.45	$369.49	$162.42	$73.90

CPT codes and descriptions only are copyright American Medical Association. All Rights Reserved. Applicable FARS/DFARS Apply.
Copyright American Dental Association. All rights reserved.
*Code is new in 2001.

ADDENDUM B.—HOSPITAL OUTPATIENT DEPARTMENT (HOPD) PAYMENT STATUS BY HCPCS CODE AND RELATED INFORMATION—Continued

CPT/ HCPCS	HOPD Status Indicator	Description	APC	Relative Weight	Payment Rate	National Unadjusted Coinsurance	Minimum Unadjusted Coinsurance
44385	T	Endoscopy of bowel pouch	0143	7.98	$395.78	$199.12	$79.16
44386	T	Endoscopy, bowel pouch/biop	0143	7.98	$395.78	$199.12	$79.16
44388	T	Colon endoscopy	0143	7.98	$395.78	$199.12	$79.16
44389	T	Colonoscopy with biopsy	0143	7.98	$395.78	$199.12	$79.16
44390	T	Colonoscopy for foreign body	0143	7.98	$395.78	$199.12	$79.16
44391	T	Colonoscopy for bleeding	0143	7.98	$395.78	$199.12	$79.16
44392	T	Colonoscopy & polypectomy	0143	7.98	$395.78	$199.12	$79.16
44393	T	Colonoscopy, lesion removal	0143	7.98	$395.78	$199.12	$79.16
44394	T	Colonoscopy w/snare	0143	7.98	$395.78	$199.12	$79.16
*44397	T	Colonoscopy w/stent	0143	7.98	$395.78	$199.12	$79.16
44500	T	Intro, gastrointestinal tube	0121	2.36	$117.05	$52.53	$23.41
44602	C	Suture, small intestine					
44603	C	Suture, small intestine					
44604	C	Suture, large intestine					
44605	C	Repair of bowel lesion					
44615	C	Intestinal stricturoplasty					
44620	C	Repair bowel opening					
44625	C	Repair bowel opening					
44626	C	Repair bowel opening					
44640	C	Repair bowel-skin fistula					
44650	C	Repair bowel fistula					
44660	C	Repair bowel-bladder fistula					
44661	C	Repair bowel-bladder fistula					
44680	C	Surgical revision, intestine					
44700	C	Suspend bowel w/prosthesis					
44799	T	Intestine surgery procedure	0142	7.45	$369.49	$162.42	$73.90
44800	C	Excision of bowel pouch					
44820	C	Excision of mesentery lesion					
44850	C	Repair of mesentery					
44899	C	Bowel surgery procedure					
44900	C	Drain app abscess, open					
44901	C	Drain app abscess, percut					
44950	C	Appendectomy					
44955	C	Appendectomy add-on					
44960	C	Appendectomy					
44970	T	Laparoscopy, appendectomy	0130	25.36	$1,257.75	$659.53	$251.55
44979	T	Laparoscope proc, app	0130	25.36	$1,257.75	$659.53	$251.55
45000	T	Drainage of pelvic abscess	0149	12.86	$637.80	$293.06	$127.56
45005	T	Drainage of rectal abscess	0148	2.34	$116.06	$43.59	$23.21
45020	T	Drainage of rectal abscess	0149	12.86	$637.80	$293.06	$127.56
45100	T	Biopsy of rectum	0149	12.86	$637.80	$293.06	$127.56
45108	T	Removal of anorectal lesion	0150	17.68	$876.86	$437.12	$175.37
45110	C	Removal of rectum					
45111	C	Partial removal of rectum					
45112	C	Removal of rectum					
45113	C	Partial proctectomy					
45114	C	Partial removal of rectum					
45116	C	Partial removal of rectum					
45119	C	Remove rectum w/reservoir					
45120	C	Removal of rectum					
45121	C	Removal of rectum and colon					
45123	C	Partial proctectomy					
45126	C	Pelvic exenteration					
45130	C	Excision of rectal prolapse					
45135	C	Excision of rectal prolapse					
45150	T	Excision of rectal stricture	0150	17.68	$876.86	$437.12	$175.37
45160	T	Excision of rectal lesion	0150	17.68	$876.86	$437.12	$175.37
45170	T	Excision of rectal lesion	0150	17.68	$876.86	$437.12	$175.37
45190	T	Destruction, rectal tumor	0150	17.68	$876.86	$437.12	$175.37
45300	T	Proctosigmoidoscopy	0146	2.83	$140.36	$65.15	$28.07
45303	T	Proctosigmoidoscopy	0146	2.83	$140.36	$65.15	$28.07
45305	T	Proctosigmoidoscopy & biopsy	0146	2.83	$140.36	$65.15	$28.07
45307	T	Proctosigmoidoscopy	0146	2.83	$140.36	$65.15	$28.07
45308	T	Proctosigmoidoscopy	0147	6.26	$310.47	$149.11	$62.09
45309	T	Proctosigmoidoscopy	0147	6.26	$310.47	$149.11	$62.09
45315	T	Proctosigmoidoscopy	0147	6.26	$310.47	$149.11	$62.09
45317	T	Proctosigmoidoscopy	0146	2.83	$140.36	$65.15	$28.07
45320	T	Proctosigmoidoscopy	0147	6.26	$310.47	$149.11	$62.09
45321	T	Proctosigmoidoscopy	0147	6.26	$310.47	$149.11	$62.09
*45327	T	Proctosigmoidoscopy w/stent	0147	6.26	$310.47	$149.11	$62.09
45330	T	Diagnostic sigmoidoscopy	0146	2.83	$140.36	$65.15	$28.07
45331	T	Sigmoidoscopy and biopsy	0146	2.83	$140.36	$65.15	$28.07
45332	T	Sigmoidoscopy w/fb removal	0146	2.83	$140.36	$65.15	$28.07
45333	T	Sigmoidoscopy & polypectomy	0147	6.26	$310.47	$149.11	$62.09

CPT codes and descriptions only are copyright American Medical Association. All Rights Reserved. Applicable FARS/DFARS Apply.
Copyright American Dental Association. All rights reserved.
*Code is new in 2001.

ADDENDUM B.—HOSPITAL OUTPATIENT DEPARTMENT (HOPD) PAYMENT STATUS BY HCPCS CODE AND RELATED INFORMATION—Continued

CPT/ HCPCS	HOPD Status Indicator	Description	APC	Relative Weight	Payment Rate	National Unadjusted Coinsurance	Minimum Unadjusted Coinsurance
45334	T	Sigmoidoscopy for bleeding	0147	6.26	$310.47	$149.11	$62.09
45337	T	Sigmoidoscopy & decompress	0147	6.26	$310.47	$149.11	$62.09
45338	T	Sigmoidoscopy w/tumr remove	0147	6.26	$310.47	$149.11	$62.09
45339	T	Sigmoidoscopy w/ablate tumr	0147	6.26	$310.47	$149.11	$62.09
*45341	T	Sigmoidoscopy w/ultrasound	0147	6.26	$310.47	$149.11	$62.09
*45342	T	Sigmoidoscopy w/ US guide bx	0147	6.26	$310.47	$149.11	$62.09
*45345	T	Sigmoidoscopy w/stent	0147	6.26	$310.47	$149.11	$62.09
45355	T	Surgical colonoscopy	0143	7.98	$395.78	$199.12	$79.16
45378	T	Diagnostic colonoscopy	0143	7.98	$395.78	$199.12	$79.16
45379	T	Colonoscopy	0143	7.98	$395.78	$199.12	$79.16
45380	T	Colonoscopy and biopsy	0143	7.98	$395.78	$199.12	$79.16
45382	T	Colonoscopy/control bleeding	0143	7.98	$395.78	$199.12	$79.16
45383	T	Lesion removal colonoscopy	0143	7.98	$395.78	$199.12	$79.16
45384	T	Colonoscopy	0143	7.98	$395.78	$199.12	$79.16
45385	T	Lesion removal colonoscopy	0143	7.98	$395.78	$199.12	$79.16
*45387	T	Colonoscopy w/stent	0143	7.98	$395.78	$199.12	$79.16
45500	T	Repair of rectum	0150	17.68	$876.86	$437.12	$175.37
45505	T	Repair of rectum	0150	17.68	$876.86	$437.12	$175.37
45520	T	Treatment of rectal prolapse	0098	1.19	$59.02	$20.88	$11.80
45540	C	Correct rectal prolapse					
45541	C	Correct rectal prolapse					
45550	C	Repair rectum/remove sigmoid					
45560	T	Repair of rectocele	0150	17.68	$876.86	$437.12	$175.37
45562	C	Exploration/repair of rectum					
45563	C	Exploration/repair of rectum					
45800	C	Repair rect/bladder fistula					
45805	C	Repair fistula w/colostomy					
45820	C	Repair rectourethral fistula					
45825	C	Repair fistula w/colostomy					
45900	T	Reduction of rectal prolapse	0148	2.34	$116.06	$43.59	$23.21
45905	T	Dilation of anal sphincter	0149	12.86	$637.80	$293.06	$127.56
45910	T	Dilation of rectal narrowing	0149	12.86	$637.80	$293.06	$127.56
45915	T	Remove rectal obstruction	0148	2.34	$116.06	$43.59	$23.21
45999	T	Rectum surgery procedure	0148	2.34	$116.06	$43.59	$23.21
46030	T	Removal of rectal marker	0149	12.86	$637.80	$293.06	$127.56
46040	T	Incision of rectal abscess	0148	2.34	$116.06	$43.59	$23.21
46045	T	Incision of rectal abscess	0150	17.68	$876.86	$437.12	$175.37
46050	T	Incision of anal abscess	0148	2.34	$116.06	$43.59	$23.21
46060	T	Incision of rectal abscess	0150	17.68	$876.86	$437.12	$175.37
46070	T	Incision of anal septum	0148	2.34	$116.06	$43.59	$23.21
46080	T	Incision of anal sphincter	0149	12.86	$637.80	$293.06	$127.56
46083	T	Incise external hemorrhoid	0148	2.34	$116.06	$43.59	$23.21
46200	T	Removal of anal fissure	0150	17.68	$876.86	$437.12	$175.37
46210	T	Removal of anal crypt	0149	12.86	$637.80	$293.06	$127.56
46211	T	Removal of anal crypts	0150	17.68	$876.86	$437.12	$175.37
46220	T	Removal of anal tab	0149	12.86	$637.80	$293.06	$127.56
46221	T	Ligation of hemorrhoid(s)	0148	2.34	$116.06	$43.59	$23.21
46230	T	Removal of anal tabs	0149	12.86	$637.80	$293.06	$127.56
46250	T	Hemorrhoidectomy	0150	17.68	$876.86	$437.12	$175.37
46255	T	Hemorrhoidectomy	0150	17.68	$876.86	$437.12	$175.37
46257	T	Remove hemorrhoids & fissure	0150	17.68	$876.86	$437.12	$175.37
46258	T	Remove hemorrhoids & fistula	0150	17.68	$876.86	$437.12	$175.37
46260	T	Hemorrhoidectomy	0150	17.68	$876.86	$437.12	$175.37
46261	T	Remove hemorrhoids & fissure	0150	17.68	$876.86	$437.12	$175.37
46262	T	Remove hemorrhoids & fistula	0150	17.68	$876.86	$437.12	$175.37
46270	T	Removal of anal fistula	0150	17.68	$876.86	$437.12	$175.37
46275	T	Removal of anal fistula	0150	17.68	$876.86	$437.12	$175.37
46280	T	Removal of anal fistula	0150	17.68	$876.86	$437.12	$175.37
46285	T	Removal of anal fistula	0150	17.68	$876.86	$437.12	$175.37
46288	T	Repair anal fistula	0150	17.68	$876.86	$437.12	$175.37
46320	T	Removal of hemorrhoid clot	0148	2.34	$116.06	$43.59	$23.21
46500	T	Injection into hemorrhoids	0148	2.34	$116.06	$43.59	$23.21
46600	N	Diagnostic anoscopy					
46604	T	Anoscopy and dilation	0144	2.23	$110.60	$49.32	$22.12
46606	T	Anoscopy and biopsy	0145	7.46	$369.98	$179.39	$74.00
46608	T	Anoscopy/ remove for body	0144	2.23	$110.60	$49.32	$22.12
46610	T	Anoscopy/remove lesion	0145	7.46	$369.98	$179.39	$74.00
46611	T	Anoscopy	0145	7.46	$369.98	$179.39	$74.00
46612	T	Anoscopy/ remove lesions	0145	7.46	$369.98	$179.39	$74.00
46614	T	Anoscopy/control bleeding	0145	7.46	$369.98	$179.39	$74.00
46615	T	Anoscopy	0145	7.46	$369.98	$179.39	$74.00
46700	T	Repair of anal stricture	0150	17.68	$876.86	$437.12	$175.37
46705	C	Repair of anal stricture					
46715	C	Repair of anovaginal fistula					

CPT codes and descriptions only are copyright American Medical Association. All Rights Reserved. Applicable FARS/DFARS Apply.
Copyright American Dental Association. All rights reserved.
*Code is new in 2001.

ADDENDUM B.—HOSPITAL OUTPATIENT DEPARTMENT (HOPD) PAYMENT STATUS BY HCPCS CODE AND RELATED INFORMATION—Continued

CPT/ HCPCS	HOPD Status Indicator	Description	APC	Relative Weight	Payment Rate	National Unadjusted Coinsurance	Minimum Unadjusted Coinsurance
46716	C	Repair of anovaginal fistula					
46730	C	Construction of absent anus					
46735	C	Construction of absent anus					
46740	C	Construction of absent anus					
46742	C	Repair of imperforated anus					
46744	C	Repair of cloacal anomaly					
46746	C	Repair of cloacal anomaly					
46748	C	Repair of cloacal anomaly					
46750	T	Repair of anal sphincter	0150	17.68	$876.86	$437.12	$175.37
46751	C	Repair of anal sphincter					
46753	T	Reconstruction of anus	0150	17.68	$876.86	$437.12	$175.37
46754	T	Removal of suture from anus	0149	12.86	$637.80	$293.06	$127.56
46760	T	Repair of anal sphincter	0150	17.68	$876.86	$437.12	$175.37
46761	T	Repair of anal sphincter	0150	17.68	$876.86	$437.12	$175.37
46762	T	Implant artificial sphincter	0150	17.68	$876.86	$437.12	$175.37
46900	T	Destruction, anal lesion(s)	0016	3.53	$175.07	$74.67	$35.01
46910	T	Destruction, anal lesion(s)	0016	3.53	$175.07	$74.67	$35.01
46916	T	Cryosurgery, anal lesion(s)	0016	3.53	$175.07	$74.67	$35.01
46917	T	Laser surgery, anal lesions	0014	1.50	$74.39	$24.55	$14.88
46922	T	Excision of anal lesion(s)	0017	12.45	$617.47	$289.16	$123.49
46924	T	Destruction, anal lesion(s)	0017	12.45	$617.47	$289.16	$123.49
46934	T	Destruction of hemorrhoids	0148	2.34	$116.06	$43.59	$23.21
46935	T	Destruction of hemorrhoids	0148	2.34	$116.06	$43.59	$23.21
46936	T	Destruction of hemorrhoids	0149	12.86	$637.80	$293.06	$127.56
46937	T	Cryotherapy of rectal lesion	0150	17.68	$876.86	$437.12	$175.37
46938	T	Cryotherapy of rectal lesion	0150	17.68	$876.86	$437.12	$175.37
46940	T	Treatment of anal fissure	0149	12.86	$637.80	$293.06	$127.56
46942	T	Treatment of anal fissure	0149	12.86	$637.80	$293.06	$127.56
46945	T	Ligation of hemorrhoids	0148	2.34	$116.06	$43.59	$23.21
46946	T	Ligation of hemorrhoids	0148	2.34	$116.06	$43.59	$23.21
46999	T	Anus surgery procedure	0149	12.86	$637.80	$293.06	$127.56
47000	T	Needle biopsy of liver	0005	5.41	$268.32	$119.75	$53.66
47001	C	Needle biopsy, liver add-on					
47010	C	Open drainage, liver lesion					
47011	C	Percut drain, liver lesion					
47015	C	Inject/aspirate liver cyst					
47100	C	Wedge biopsy of liver					
47120	C	Partial removal of liver					
47122	C	Extensive removal of liver					
47125	C	Partial removal of liver					
47130	C	Partial removal of liver					
47133	C	Removal of donor liver					
47134	C	Partial removal, donor liver					
47135	C	Transplantation of liver					
47136	C	Transplantation of liver					
47300	C	Surgery for liver lesion					
47350	C	Repair liver wound					
47360	C	Repair liver wound					
47361	C	Repair liver wound					
47362	C	Repair liver wound					
*47379	T	Laparoscope procedure, liver	0130	25.36	$1,257.75	$659.53	$251.55
47399	T	Liver surgery procedure	0005	5.41	$268.32	$119.75	$53.66
47400	C	Incision of liver duct					
47420	C	Incision of bile duct					
47425	C	Incision of bile duct					
47460	C	Incise bile duct sphincter					
47480	C	Incision of gallbladder					
47490	C	Incision of gallbladder					
47500	N	Injection for liver x-rays					
47505	N	Injection for liver x-rays					
47510	T	Insert catheter, bile duct	0152	8.22	$407.68	$207.38	$81.54
47511	T	Insert bile duct drain	0152	8.22	$407.68	$207.38	$81.54
47525	T	Change bile duct catheter	0122	5.04	$249.96	$114.93	$49.99
47530	T	Revise/reinsert bile tube	0121	2.36	$117.05	$52.53	$23.41
47550	C	Bile duct endoscopy add-on					
47552	T	Biliary endoscopy thru skin	0152	8.22	$407.68	$207.38	$81.54
47553	T	Biliary endoscopy thru skin	0152	8.22	$407.68	$207.38	$81.54
47554	T	Biliary endoscopy thru skin	0152	8.22	$407.68	$207.38	$81.54
47555	T	Biliary endoscopy thru skin	0152	8.22	$407.68	$207.38	$81.54
47556	T	Biliary endoscopy thru skin	0152	8.22	$407.68	$207.38	$81.54
47560	T	Laparoscopy w/cholangio	0130	25.36	$1,257.75	$659.53	$251.55
47561	T	Laparo w/cholangio/biopsy	0130	25.36	$1,257.75	$659.53	$251.55
47562	T	Laparoscopic cholecystectomy	0131	41.81	$2,073.61	$1,089.88	$414.72
47563	T	Laparo cholecystectomy/graph	0131	41.81	$2,073.61	$1,089.88	$414.72

CPT codes and descriptions only are copyright American Medical Association. All Rights Reserved. Applicable FARS/DFARS Apply.
Copyright American Dental Association. All rights reserved.
*Code is new in 2001.

ADDENDUM B.—HOSPITAL OUTPATIENT DEPARTMENT (HOPD) PAYMENT STATUS BY HCPCS CODE AND RELATED INFORMATION—Continued

CPT/ HCPCS	HOPD Status Indicator	Description	APC	Relative Weight	Payment Rate	National Unadjusted Coinsurance	Minimum Unadjusted Coinsurance
47564	T	Laparo cholecystectomy/explr	0131	41.81	$2,073.61	$1,089.88	$414.72
47570	C	Laparo cholecystoenterostomy					
47579	T	Laparoscope proc, biliary	0130	25.36	$1,257.75	$659.53	$251.55
47600	C	Removal of gallbladder					
47605	C	Removal of gallbladder					
47610	C	Removal of gallbladder					
47612	C	Removal of gallbladder					
47620	C	Removal of gallbladder					
47630	T	Remove bile duct stone	0152	8.22	$407.68	$207.38	$81.54
47700	C	Exploration of bile ducts					
47701	C	Bile duct revision					
47711	C	Excision of bile duct tumor					
47712	C	Excision of bile duct tumor					
47715	C	Excision of bile duct cyst					
47716	C	Fusion of bile duct cyst					
47720	C	Fuse gallbladder & bowel					
47721	C	Fuse upper gi structures					
47740	C	Fuse gallbladder & bowel					
47741	C	Fuse gallbladder & bowel					
47760	C	Fuse bile ducts and bowel					
47765	C	Fuse liver ducts & bowel					
47780	C	Fuse bile ducts and bowel					
47785	C	Fuse bile ducts and bowel					
47800	C	Reconstruction of bile ducts					
47801	C	Placement, bile duct support					
47802	C	Fuse liver duct & intestine					
47900	C	Suture bile duct injury					
47999	T	Bile tract surgery procedure	0121	2.36	$117.05	$52.53	$23.41
48000	C	Drainage of abdomen					
48001	C	Placement of drain, pancreas					
48005	C	Resect/debride pancreas					
48020	C	Removal of pancreatic stone					
48100	C	Biopsy of pancreas					
48102	T	Needle biopsy, pancreas	0005	5.41	$268.32	$119.75	$53.66
48120	C	Removal of pancreas lesion					
48140	C	Partial removal of pancreas					
48145	C	Partial removal of pancreas					
48146	C	Pancreatectomy					
48148	C	Removal of pancreatic duct					
48150	C	Partial removal of pancreas					
48152	C	Pancreatectomy					
48153	C	Pancreatectomy					
48154	C	Pancreatectomy					
48155	C	Removal of pancreas					
48160	E	Pancreas removal/transplant					
48180	C	Fuse pancreas and bowel					
48400	C	Injection, intraop add-on					
48500	C	Surgery of pancreas cyst					
48510	C	Drain pancreatic pseudocyst					
48511	C	Drain pancreatic pseudocyst					
48520	C	Fuse pancreas cyst and bowel					
48540	C	Fuse pancreas cyst and bowel					
48545	C	Pancreatorrhaphy					
48547	C	Duodenal exclusion					
48550	E	Donor pancreatectomy					
48554	E	Transpl allograft pancreas					
48556	C	Removal, allograft pancreas					
48999	T	Pancreas surgery procedure	0005	5.41	$268.32	$119.75	$53.66
49000	C	Exploration of abdomen					
49002	C	Reopening of abdomen					
49010	C	Exploration behind abdomen					
49020	C	Drain abdominal abscess					
49021	C	Drain abdominal abscess					
49040	C	Drain, open, abdom abscess					
49041	C	Drain, percut, abdom abscess					
49060	C	Drain, open, retrop abscess					
49061	C	Drain, percut, retroper absc					
49062	C	Drain to peritoneal cavity					
49080	T	Puncture, peritoneal cavity	0070	3.64	$180.53	$79.60	$36.11
49081	T	Removal of abdominal fluid	0070	3.64	$180.53	$79.60	$36.11
49085	T	Remove abdomen foreign body	0153	19.62	$973.08	$496.31	$194.62
49180	T	Biopsy, abdominal mass	0005	5.41	$268.32	$119.75	$53.66
49200	C	Removal of abdominal lesion					
49201	C	Removal of abdominal lesion					

CPT codes and descriptions only are copyright American Medical Association. All Rights Reserved. Applicable FARS/DFARS Apply.
Copyright American Dental Association. All rights reserved.
*Code is new in 2001.

ADDENDUM B.—HOSPITAL OUTPATIENT DEPARTMENT (HOPD) PAYMENT STATUS BY HCPCS CODE AND RELATED INFORMATION—Continued

CPT/ HCPCS	HOPD Status Indicator	Description	APC	Relative Weight	Payment Rate	National Unadjusted Coinsurance	Minimum Unadjusted Coinsurance
49215	C	Excise sacral spine tumor					
49220	C	Multiple surgery, abdomen					
49250	T	Excision of umbilicus	0153	19.62	$973.08	$496.31	$194.62
49255	C	Removal of omentum					
49320	T	Diag laparo separate proc	0130	25.36	$1,257.75	$659.53	$251.55
49321	T	Laparoscopy, biopsy	0130	25.36	$1,257.75	$659.53	$251.55
49322	T	Laparoscopy, aspiration	0130	25.36	$1,257.75	$659.53	$251.55
49323	T	Laparo drain lymphocele	0130	25.36	$1,257.75	$659.53	$251.55
49329	T	Laparo proc, abdm/per/oment	0130	25.36	$1,257.75	$659.53	$251.55
49400	N	Air injection into abdomen					
49420	T	Insert abdominal drain	0153	19.62	$973.08	$496.31	$194.62
49421	T	Insert abdominal drain	0153	19.62	$973.08	$496.31	$194.62
49422	T	Remove perm cannula/catheter	0105	15.06	$746.92	$372.32	$149.38
49423	T	Exchange drainage catheter	0153	19.62	$973.08	$496.31	$194.62
49424	N	Assess cyst, contrast inject					
49425	C	Insert abdomen-venous drain					
49426	T	Revise abdomen-venous shunt	0153	19.62	$973.08	$496.31	$194.62
49427	N	Injection, abdominal shunt					
49428	C	Ligation of shunt					
49429	T	Removal of shunt	0105	15.06	$746.92	$372.32	$149.38
49495	T	Repair inguinal hernia, init	0154	22.43	$1,112.45	$556.98	$222.49
49496	T	Repair inguinal hernia, init	0154	22.43	$1,112.45	$556.98	$222.49
49500	T	Repair inguinal hernia	0154	22.43	$1,112.45	$556.98	$222.49
49501	T	Repair inguinal hernia, init	0154	22.43	$1,112.45	$556.98	$222.49
49505	T	Repair inguinal hernia	0154	22.43	$1,112.45	$556.98	$222.49
49507	T	Repair inguinal hernia	0154	22.43	$1,112.45	$556.98	$222.49
49520	T	Rerepair inguinal hernia	0154	22.43	$1,112.45	$556.98	$222.49
49521	T	Repair inguinal hernia, rec	0154	22.43	$1,112.45	$556.98	$222.49
49525	T	Repair inguinal hernia	0154	22.43	$1,112.45	$556.98	$222.49
49540	T	Repair lumbar hernia	0154	22.43	$1,112.45	$556.98	$222.49
49550	T	Repair femoral hernia	0154	22.43	$1,112.45	$556.98	$222.49
49553	T	Repair femoral hernia, init	0154	22.43	$1,112.45	$556.98	$222.49
49555	T	Repair femoral hernia	0154	22.43	$1,112.45	$556.98	$222.49
49557	T	Repair femoral hernia, recur	0154	22.43	$1,112.45	$556.98	$222.49
49560	T	Repair abdominal hernia	0154	22.43	$1,112.45	$556.98	$222.49
49561	T	Repair incisional hernia	0154	22.43	$1,112.45	$556.98	$222.49
49565	T	Rerepair abdominal hernia	0154	22.43	$1,112.45	$556.98	$222.49
49566	T	Repair incisional hernia	0154	22.43	$1,112.45	$556.98	$222.49
49568	T	Hernia repair w/mesh	0154	22.43	$1,112.45	$556.98	$222.49
49570	T	Repair epigastric hernia	0154	22.43	$1,112.45	$556.98	$222.49
49572	T	Repair epigastric hernia	0154	22.43	$1,112.45	$556.98	$222.49
49580	T	Repair umbilical hernia	0154	22.43	$1,112.45	$556.98	$222.49
49582	T	Repair umbilical hernia	0154	22.43	$1,112.45	$556.98	$222.49
49585	T	Repair umbilical hernia	0154	22.43	$1,112.45	$556.98	$222.49
49587	T	Repair umbilical hernia	0154	22.43	$1,112.45	$556.98	$222.49
49590	T	Repair abdominal hernia	0154	22.43	$1,112.45	$556.98	$222.49
49600	T	Repair umbilical lesion	0154	22.43	$1,112.45	$556.98	$222.49
49605	C	Repair umbilical lesion					
49606	C	Repair umbilical lesion					
49610	C	Repair umbilical lesion					
49611	C	Repair umbilical lesion					
49650	T	Laparo hernia repair initial	0131	41.81	$2,073.61	$1,089.88	$414.72
49651	T	Laparo hernia repair recur	0131	41.81	$2,073.61	$1,089.88	$414.72
49659	T	Laparo proc, hernia repair	0131	41.81	$2,073.61	$1,089.88	$414.72
49900	C	Repair of abdominal wall					
49905	C	Omental flap					
49906	C	Free omental flap, microvasc					
49999	T	Abdomen surgery procedure	0121	2.36	$117.05	$52.53	$23.41
50010	C	Exploration of kidney					
50020	C	Renal abscess, open drain					
50021	C	Renal abscess, percut drain					
50040	C	Drainage of kidney					
50045	C	Exploration of kidney					
50060	C	Removal of kidney stone					
50065	C	Incision of kidney					
50070	C	Incision of kidney					
50075	C	Removal of kidney stone					
50080	T	Removal of kidney stone	0163	28.98	$1,437.30	$792.58	$287.46
50081	T	Removal of kidney stone	0163	28.98	$1,437.30	$792.58	$287.46
50100	C	Revise kidney blood vessels					
50120	C	Exploration of kidney					
50125	C	Explore and drain kidney					
50130	C	Removal of kidney stone					
50135	C	Exploration of kidney					

CPT codes and descriptions only are copyright American Medical Association. All Rights Reserved. Applicable FARS/DFARS Apply.
Copyright American Dental Association. All rights reserved.
*Code is new in 2001.

ADDENDUM B.—HOSPITAL OUTPATIENT DEPARTMENT (HOPD) PAYMENT STATUS BY HCPCS CODE AND RELATED INFORMATION—Continued

CPT/ HCPCS	HOPD Status Indicator	Description	APC	Relative Weight	Payment Rate	National Unadjusted Coinsurance	Minimum Unadjusted Coinsurance
50200	T	Biopsy of kidney	0005	5.41	$268.32	$119.75	$53.66
50205	C	Biopsy of kidney					
50220	C	Removal of kidney					
50225	C	Removal of kidney					
50230	C	Removal of kidney					
50234	C	Removal of kidney & ureter					
50236	C	Removal of kidney & ureter					
50240	C	Partial removal of kidney					
50280	C	Removal of kidney lesion					
50290	C	Removal of kidney lesion					
50300	C	Removal of donor kidney					
50320	C	Removal of donor kidney					
50340	C	Removal of kidney					
50360	C	Transplantation of kidney					
50365	C	Transplantation of kidney					
50370	C	Remove transplanted kidney					
50380	C	Reimplantation of kidney					
50390	T	Drainage of kidney lesion	0005	5.41	$268.32	$119.75	$53.66
50392	T	Insert kidney drain	0160	5.43	$269.30	$110.11	$53.86
50393	T	Insert ureteral tube	0160	5.43	$269.30	$110.11	$53.86
50394	N	Injection for kidney x-ray					
50395	T	Create passage to kidney	0160	5.43	$269.30	$110.11	$53.86
50396	T	Measure kidney pressure	0165	3.89	$192.92	$91.76	$38.58
50398	T	Change kidney tube	0122	5.04	$249.96	$114.93	$49.99
50400	C	Revision of kidney/ureter					
50405	C	Revision of kidney/ureter					
50500	C	Repair of kidney wound					
50520	C	Close kidney-skin fistula					
50525	C	Repair renal-abdomen fistula					
50526	C	Repair renal-abdomen fistula					
50540	C	Revision of horseshoe kidney					
50541	T	Laparo ablate renal cyst	0131	41.81	$2,073.61	$1,089.88	$414.72
50544	T	Laparoscopy, pyeloplasty	0131	41.81	$2,073.61	$1,089.88	$414.72
*50545	C	Laparo radical nephrectomy					
50546	C	Laparoscopic nephrectomy					
50547	C	Laparo removal donor kidney					
50548	C	Laparo-asst remove k/ureter					
50549	T	Laparoscope proc, renal	0130	25.36	$1,257.75	$659.53	$251.55
50551	T	Kidney endoscopy	0161	10.94	$542.58	$249.36	$108.52
50553	T	Kidney endoscopy	0161	10.94	$542.58	$249.36	$108.52
50555	T	Kidney endoscopy & biopsy	0161	10.94	$542.58	$249.36	$108.52
50557	T	Kidney endoscopy & treatment	0161	10.94	$542.58	$249.36	$108.52
50559	T	Renal endoscopy/radiotracer	0161	10.94	$542.58	$249.36	$108.52
50561	T	Kidney endoscopy & treatment	0161	10.94	$542.58	$249.36	$108.52
50570	C	Kidney endoscopy					
50572	C	Kidney endoscopy					
50574	C	Kidney endoscopy & biopsy					
50575	C	Kidney endoscopy					
50576	C	Kidney endoscopy & treatment					
50578	C	Renal endoscopy/radiotracer					
50580	C	Kidney endoscopy & treatment					
50590	T	Fragmenting of kidney stone	0169	46.72	$2,317.13	$1,384.20	$463.43
50600	C	Exploration of ureter					
50605	C	Insert ureteral support					
50610	C	Removal of ureter stone					
50620	C	Removal of ureter stone					
50630	C	Removal of ureter stone					
50650	C	Removal of ureter					
50660	C	Removal of ureter					
50684	N	Injection for ureter x-ray					
50686	T	Measure ureter pressure	0165	3.89	$192.92	$91.76	$38.58
50688	T	Change of ureter tube	0121	2.36	$117.05	$52.53	$23.41
50690	N	Injection for ureter x-ray					
50700	C	Revision of ureter					
50715	C	Release of ureter					
50722	C	Release of ureter					
50725	C	Release/revise ureter					
50727	C	Revise ureter					
50728	C	Revise ureter					
50740	C	Fusion of ureter & kidney					
50750	C	Fusion of ureter & kidney					
50760	C	Fusion of ureters					
50770	C	Splicing of ureters					
50780	C	Reimplant ureter in bladder					

CPT codes and descriptions only are copyright American Medical Association. All Rights Reserved. Applicable FARS/DFARS Apply.
Copyright American Dental Association. All rights reserved.
*Code is new in 2001.

ADDENDUM B.—HOSPITAL OUTPATIENT DEPARTMENT (HOPD) PAYMENT STATUS BY HCPCS CODE AND RELATED INFORMATION—Continued

CPT/ HCPCS	HOPD Status Indicator	Description	APC	Relative Weight	Payment Rate	National Unadjusted Coinsurance	Minimum Unadjusted Coinsurance
50782	C	Reimplant ureter in bladder					
50783	C	Reimplant ureter in bladder					
50785	C	Reimplant ureter in bladder					
50800	C	Implant ureter in bowel					
50810	C	Fusion of ureter & bowel					
50815	C	Urine shunt to bowel					
50820	C	Construct bowel bladder					
50825	C	Construct bowel bladder					
50830	C	Revise urine flow					
50840	C	Replace ureter by bowel					
50845	C	Appendico-vesicostomy					
50860	C	Transplant ureter to skin					
50900	C	Repair of ureter					
50920	C	Closure ureter/skin fistula					
50930	C	Closure ureter/bowel fistula					
50940	C	Release of ureter					
50945	T	Laparoscopy ureterolithotomy	0131	41.81	$2,073.61	$1,089.88	$414.72
*50947	T	Laparoscopy new ureter/bladder	0130	25.36	$1,257.75	$659.53	$251.55
*50948	T	Laparoscopy new ureter/bladder	0130	25.36	$1,257.75	$659.53	$251.55
*50949	T	Laparoscope proc, ureter	0130	25.36	$1,257.75	$659.53	$251.55
50951	T	Endoscopy of ureter	0162	17.49	$867.44	$427.49	$173.49
50953	T	Endoscopy of ureter	0162	17.49	$867.44	$427.49	$173.49
50955	T	Ureter endoscopy & biopsy	0162	17.49	$867.44	$427.49	$173.49
50957	T	Ureter endoscopy & treatment	0162	17.49	$867.44	$427.49	$173.49
50959	T	Ureter endoscopy & tracer	0162	17.49	$867.44	$427.49	$173.49
50961	T	Ureter endoscopy & treatment	0162	17.49	$867.44	$427.49	$173.49
50970	T	Ureter endoscopy	0162	17.49	$867.44	$427.49	$173.49
50972	T	Ureter endoscopy & catheter	0162	17.49	$867.44	$427.49	$173.49
50974	T	Ureter endoscopy & biopsy	0162	17.49	$867.44	$427.49	$173.49
50976	T	Ureter endoscopy & treatment	0162	17.49	$867.44	$427.49	$173.49
50978	T	Ureter endoscopy & tracer	0162	17.49	$867.44	$427.49	$173.49
50980	T	Ureter endoscopy & treatment	0162	17.49	$867.44	$427.49	$173.49
51000	T	Drainage of bladder	0165	3.89	$192.92	$91.76	$38.58
51005	T	Drainage of bladder	0164	2.17	$107.64	$33.03	$21.53
51010	T	Drainage of bladder	0165	3.89	$192.92	$91.76	$38.58
51020	T	Incise & treat bladder	0162	17.49	$867.44	$427.49	$173.49
51030	T	Incise & treat bladder	0162	17.49	$867.44	$427.49	$173.49
51040	T	Incise & drain bladder	0162	17.49	$867.44	$427.49	$173.49
51045	T	Incise bladder/drain ureter	0162	17.49	$867.44	$427.49	$173.49
51050	T	Removal of bladder stone	0162	17.49	$867.44	$427.49	$173.49
51060	C	Removal of ureter stone					
51065	T	Removal of ureter stone	0162	17.49	$867.44	$427.49	$173.49
51080	T	Drainage of bladder abscess	0008	6.15	$305.02	$113.67	$61.00
51500	T	Removal of bladder cyst	0154	22.43	$1,112.45	$556.98	$222.49
51520	T	Removal of bladder lesion	0162	17.49	$867.44	$427.49	$173.49
51525	C	Removal of bladder lesion					
51530	C	Removal of bladder lesion					
51535	C	Repair of ureter lesion					
51550	C	Partial removal of bladder					
51555	C	Partial removal of bladder					
51565	C	Revise bladder & ureter(s)					
51570	C	Removal of bladder					
51575	C	Removal of bladder & nodes					
51580	C	Remove bladder/revise tract					
51585	C	Removal of bladder & nodes					
51590	C	Remove bladder/revise tract					
51595	C	Remove bladder/revise tract					
51596	C	Remove bladder/create pouch					
51597	C	Removal of pelvic structures					
51600	N	Injection for bladder x-ray					
51605	N	Preparation for bladder xray					
51610	N	Injection for bladder x-ray					
51700	T	Irrigation of bladder	0164	2.17	$107.64	$33.03	$21.53
51705	T	Change of bladder tube	0121	2.36	$117.05	$52.53	$23.41
51710	T	Change of bladder tube	0121	2.36	$117.05	$52.53	$23.41
51715	T	Endoscopic injection/implant	0167	21.06	$1,044.50	$555.84	$208.90
51720	T	Treatment of bladder lesion	0165	3.89	$192.92	$91.76	$38.58
51725	T	Simple cystometrogram	0165	3.89	$192.92	$91.76	$38.58
51726	T	Complex cystometrogram	0165	3.89	$192.92	$91.76	$38.58
51736	T	Urine flow measurement	0164	2.17	$107.64	$33.03	$21.53
51741	T	Electro-uroflowmetry, first	0164	2.17	$107.64	$33.03	$21.53
51772	T	Urethra pressure profile	0165	3.89	$192.92	$91.76	$38.58
51784	T	Anal/urinary muscle study	0164	2.17	$107.64	$33.03	$21.53
51785	T	Anal/urinary muscle study	0164	2.17	$107.64	$33.03	$21.53

CPT codes and descriptions only are copyright American Medical Association. All Rights Reserved. Applicable FARS/DFARS Apply.
Copyright American Dental Association. All rights reserved.
*Code is new in 2001.

ADDENDUM B.—HOSPITAL OUTPATIENT DEPARTMENT (HOPD) PAYMENT STATUS BY HCPCS CODE AND RELATED INFORMATION—Continued

CPT/ HCPCS	HOPD Status Indicator	Description	APC	Relative Weight	Payment Rate	National Unadjusted Coinsurance	Minimum Unadjusted Coinsurance
51792	T	Urinary reflex study	0165	3.89	$192.92	$91.76	$38.58
51795	T	Urine voiding pressure study	0164	2.17	$107.64	$33.03	$21.53
51797	T	Intraabdominal pressure test	0164	2.17	$107.64	$33.03	$21.53
51800	C	Revision of bladder/urethra					
51820	C	Revision of urinary tract					
51840	C	Attach bladder/urethra					
51841	C	Attach bladder/urethra					
51845	C	Repair bladder neck					
51860	C	Repair of bladder wound					
51865	C	Repair of bladder wound					
51880	T	Repair of bladder opening	0162	17.49	$867.44	$427.49	$173.49
51900	C	Repair bladder/vagina lesion					
51920	C	Close bladder-uterus fistula					
51925	C	Hysterectomy/bladder repair					
51940	C	Correction of bladder defect					
51960	C	Revision of bladder & bowel					
51980	C	Construct bladder opening					
51990	T	Laparo urethral suspension	0131	41.81	$2,073.61	$1,089.88	$414.72
51992	T	Laparo sling operation	0132	48.91	$2,425.74	$1,239.22	$485.15
52000	T	Cystoscopy	0160	5.43	$269.30	$110.11	$53.86
52005	T	Cystoscopy & ureter catheter	0161	10.94	$542.58	$249.36	$108.52
52007	T	Cystoscopy and biopsy	0161	10.94	$542.58	$249.36	$108.52
52010	T	Cystoscopy & duct catheter	0161	10.94	$542.58	$249.36	$108.52
52204	T	Cystoscopy	0161	10.94	$542.58	$249.36	$108.52
52214	T	Cystoscopy and treatment	0161	10.94	$542.58	$249.36	$108.52
52224	T	Cystoscopy and treatment	0161	10.94	$542.58	$249.36	$108.52
52234	T	Cystoscopy and treatment	0162	17.49	$867.44	$427.49	$173.49
52235	T	Cystoscopy and treatment	0162	17.49	$867.44	$427.49	$173.49
52240	T	Cystoscopy and treatment	0163	28.98	$1,437.30	$792.58	$287.46
52250	T	Cystoscopy and radiotracer	0162	17.49	$867.44	$427.49	$173.49
52260	T	Cystoscopy and treatment	0161	10.94	$542.58	$249.36	$108.52
52265	T	Cystoscopy and treatment	0160	5.43	$269.30	$110.11	$53.86
52270	T	Cystoscopy & revise urethra	0161	10.94	$542.58	$249.36	$108.52
52275	T	Cystoscopy & revise urethra	0161	10.94	$542.58	$249.36	$108.52
52276	T	Cystoscopy and treatment	0161	10.94	$542.58	$249.36	$108.52
52277	T	Cystoscopy and treatment	0162	17.49	$867.44	$427.49	$173.49
52281	T	Cystoscopy and treatment	0161	10.94	$542.58	$249.36	$108.52
52282	T	Cystoscopy, implant stent	0162	17.49	$867.44	$427.49	$173.49
52283	T	Cystoscopy and treatment	0161	10.94	$542.58	$249.36	$108.52
52285	T	Cystoscopy and treatment	0161	10.94	$542.58	$249.36	$108.52
52290	T	Cystoscopy and treatment	0161	10.94	$542.58	$249.36	$108.52
52300	T	Cystoscopy and treatment	0161	10.94	$542.58	$249.36	$108.52
52301	T	Cystoscopy and treatment	0161	10.94	$542.58	$249.36	$108.52
52305	T	Cystoscopy and treatment	0161	10.94	$542.58	$249.36	$108.52
52310	T	Cystoscopy and treatment	0161	10.94	$542.58	$249.36	$108.52
52315	T	Cystoscopy and treatment	0161	10.94	$542.58	$249.36	$108.52
52317	T	Remove bladder stone	0162	17.49	$867.44	$427.49	$173.49
52318	T	Remove bladder stone	0162	17.49	$867.44	$427.49	$173.49
52320	T	Cystoscopy and treatment	0162	17.49	$867.44	$427.49	$173.49
52325	T	Cystoscopy, stone removal	0162	17.49	$867.44	$427.49	$173.49
52327	T	Cystoscopy, inject material	0161	10.94	$542.58	$249.36	$108.52
52330	T	Cystoscopy and treatment	0162	17.49	$867.44	$427.49	$173.49
52332	T	Cystoscopy and treatment	0162	17.49	$867.44	$427.49	$173.49
52334	T	Create passage to kidney	0162	17.49	$867.44	$427.49	$173.49
52335D	T	Endoscopy of urinary tract	0162	17.49	$867.44	$427.49	$173.49
52336D	T	Cystoscopy, stone removal	0162	17.49	$867.44	$427.49	$173.49
52337D	T	Cystoscopy, stone removal	0162	17.49	$867.44	$427.49	$173.49
52338D	T	Cystoscopy and treatment	0162	17.49	$867.44	$427.49	$173.49
52339D	T	Cystoscopy and treatment	0162	17.49	$867.44	$427.49	$173.49
52340D	T	Cystoscopy and treatment	0162	17.49	$867.44	$427.49	$173.49
*52341	T	Cysto w/ureter stricture treatment	0162	17.49	$867.44	$427.49	$173.49
*52342	T	Cysto w/up stricture treatment	0162	17.49	$867.44	$427.49	$173.49
*52343	T	Cysto w/renal stricture treatment	0162	17.49	$867.44	$427.49	$173.49
*52344	T	Cysto/uretero, stone removal	0162	17.49	$867.44	$427.49	$173.49
*52345	T	Cysto/uretero w/up stricture	0162	17.49	$867.44	$427.49	$173.49
*52346	T	Cystouretero w/renal strict	0162	17.49	$867.44	$427.49	$173.49
*52351	T	Cystouretero &/or pyeloscope	0161	10.94	$542.58	$249.36	$108.52
*52352	T	Cystouretero w/stone removal	0162	17.49	$867.44	$427.49	$173.49
*52353	T	Cystouretero w/lithotripsy	0162	17.49	$867.44	$427.49	$173.49
*52354	T	Cystouretero w/biopsy	0162	17.49	$867.44	$427.49	$173.49
*52355	T	Cystouretero w/excise tumor	0162	17.49	$867.44	$427.49	$173.49
*52400	T	Cystouretero w/congen repr	0162	17.49	$867.44	$427.49	$173.49
52450	T	Incision of prostate	0162	17.49	$867.44	$427.49	$173.49
52500	T	Revision of bladder neck	0162	17.49	$867.44	$427.49	$173.49

CPT codes and descriptions only are copyright American Medical Association. All Rights Reserved. Applicable FARS/DFARS Apply.
Copyright American Dental Association. All rights reserved.
*Code is new in 2001.

ADDENDUM B.—HOSPITAL OUTPATIENT DEPARTMENT (HOPD) PAYMENT STATUS BY HCPCS CODE AND RELATED INFORMATION—Continued

CPT/ HCPCS	HOPD Status Indicator	Description	APC	Relative Weight	Payment Rate	National Unadjusted Coinsurance	Minimum Unadjusted Coinsurance
52510	T	Dilation prostatic urethra	0161	10.94	$542.58	$249.36	$108.52
52601	T	Prostatectomy (TURP)	0163	28.98	$1,437.30	$792.58	$287.46
52606	T	Control postop bleeding	0162	17.49	$867.44	$427.49	$173.49
52612	T	Prostatectomy, first stage	0163	28.98	$1,437.30	$792.58	$287.46
52614	T	Prostatectomy, second stage	0163	28.98	$1,437.30	$792.58	$287.46
52620	T	Remove residual prostate	0163	28.98	$1,437.30	$792.58	$287.46
52630	T	Remove prostate regrowth	0163	28.98	$1,437.30	$792.58	$287.46
52640	T	Relieve bladder contracture	0162	17.49	$867.44	$427.49	$173.49
52647	T	Laser surgery of prostate	0163	28.98	$1,437.30	$792.58	$287.46
52648	T	Laser surgery of prostate	0163	28.98	$1,437.30	$792.58	$287.46
52700	T	Drainage of prostate abscess	0162	17.49	$867.44	$427.49	$173.49
53000	T	Incision of urethra	0166	10.17	$504.39	$218.73	$100.88
53010	T	Incision of urethra	0166	10.17	$504.39	$218.73	$100.88
53020	T	Incision of urethra	0166	10.17	$504.39	$218.73	$100.88
53025	T	Incision of urethra	0166	10.17	$504.39	$218.73	$100.88
53040	T	Drainage of urethra abscess	0166	10.17	$504.39	$218.73	$100.88
53060	T	Drainage of urethra abscess	0166	10.17	$504.39	$218.73	$100.88
53080	T	Drainage of urinary leakage	0166	10.17	$504.39	$218.73	$100.88
53085	C	Drainage of urinary leakage					
53200	T	Biopsy of urethra	0166	10.17	$504.39	$218.73	$100.88
53210	T	Removal of urethra	0168	24.94	$1,236.93	$536.11	$247.39
53215	T	Removal of urethra	0168	24.94	$1,236.93	$536.11	$247.39
53220	T	Treatment of urethra lesion	0168	24.94	$1,236.93	$536.11	$247.39
53230	T	Removal of urethra lesion	0168	24.94	$1,236.93	$536.11	$247.39
53235	T	Removal of urethra lesion	0168	24.94	$1,236.93	$536.11	$247.39
53240	T	Surgery for urethra pouch	0168	24.94	$1,236.93	$536.11	$247.39
53250	T	Removal of urethra gland	0166	10.17	$504.39	$218.73	$100.88
53260	T	Treatment of urethra lesion	0166	10.17	$504.39	$218.73	$100.88
53265	T	Treatment of urethra lesion	0166	10.17	$504.39	$218.73	$100.88
53270	T	Removal of urethra gland	0167	21.06	$1,044.50	$555.84	$208.90
53275	T	Repair of urethra defect	0166	10.17	$504.39	$218.73	$100.88
53400	T	Revise urethra, stage 1	0168	24.94	$1,236.93	$536.11	$247.39
53405	T	Revise urethra, stage 2	0168	24.94	$1,236.93	$536.11	$247.39
53410	T	Reconstruction of urethra	0168	24.94	$1,236.93	$536.11	$247.39
53415	C	Reconstruction of urethra					
53420	T	Reconstruct urethra, stage 1	0168	24.94	$1,236.93	$536.11	$247.39
53425	T	Reconstruct urethra, stage 2	0168	24.94	$1,236.93	$536.11	$247.39
53430	T	Reconstruction of urethra	0168	24.94	$1,236.93	$536.11	$247.39
53440	T	Correct bladder function	0182	52.11	$2,584.45	$1,525.05	$516.89
53442	T	Remove perineal prosthesis	0166	10.17	$504.39	$218.73	$100.88
53443	C	Reconstruction of urethra					
53445	T	Correct urine flow control	0182	52.11	$2,584.45	$1,525.05	$516.89
53447	T	Remove artificial sphincter	0168	24.94	$1,236.93	$536.11	$247.39
53449	T	Correct artificial sphincter	0168	24.94	$1,236.93	$536.11	$247.39
53450	T	Revision of urethra	0168	24.94	$1,236.93	$536.11	$247.39
53460	T	Revision of urethra	0168	24.94	$1,236.93	$536.11	$247.39
53502	T	Repair of urethra injury	0166	10.17	$504.39	$218.73	$100.88
53505	T	Repair of urethra injury	0167	21.06	$1,044.50	$555.84	$208.90
53510	T	Repair of urethra injury	0166	10.17	$504.39	$218.73	$100.88
53515	T	Repair of urethra injury	0168	24.94	$1,236.93	$536.11	$247.39
53520	T	Repair of urethra defect	0168	24.94	$1,236.93	$536.11	$247.39
53600	T	Dilate urethra stricture	0164	2.17	$107.64	$33.03	$21.53
53601	T	Dilate urethra stricture	0164	2.17	$107.64	$33.03	$21.53
53605	T	Dilate urethra stricture	0161	10.94	$542.58	$249.36	$108.52
53620	T	Dilate urethra stricture	0165	3.89	$192.92	$91.76	$38.58
53621	T	Dilate urethra stricture	0164	2.17	$107.64	$33.03	$21.53
53660	T	Dilation of urethra	0164	2.17	$107.64	$33.03	$21.53
53661	T	Dilation of urethra	0164	2.17	$107.64	$33.03	$21.53
53665	T	Dilation of urethra	0166	10.17	$504.39	$218.73	$100.88
53670	N	Insert urinary catheter					
53675	T	Insert urinary catheter	0164	2.17	$107.64	$33.03	$21.53
53850	T	Prostatic microwave thermotx	0980	38.67	$1,917.89		$383.58
53852	T	Prostatic rf thermotx	0980	38.67	$1,917.89		$383.58
53899	T	Urology surgery procedure	0165	3.89	$192.92	$91.76	$38.58
54000	T	Slitting of prepuce	0166	10.17	$504.39	$218.73	$100.88
54001	T	Slitting of prepuce	0166	10.17	$504.39	$218.73	$100.88
54015	T	Drain penis lesion	0008	6.15	$305.02	$113.67	$61.00
54050	T	Destruction, penis lesion(s)	0013	0.91	$45.13	$17.66	$9.03
54055	T	Destruction, penis lesion(s)	0016	3.53	$175.07	$74.67	$35.01
54056	T	Cryosurgery, penis lesion(s)	0013	0.91	$45.13	$17.66	$9.03
54057	T	Laser surg, penis lesion(s)	0017	12.45	$617.47	$289.16	$123.49
54060	T	Excision of penis lesion(s)	0017	12.45	$617.47	$289.16	$123.49
54065	T	Destruction, penis lesion(s)	0017	12.45	$617.47	$289.16	$123.49
54100	T	Biopsy of penis	0020	6.51	$322.87	$130.53	$64.57

CPT codes and descriptions only are copyright American Medical Association. All Rights Reserved. Applicable FARS/DFARS Apply.
Copyright American Dental Association. All rights reserved.
*Code is new in 2001.

ADDENDUM B.—HOSPITAL OUTPATIENT DEPARTMENT (HOPD) PAYMENT STATUS BY HCPCS CODE AND RELATED INFORMATION—Continued

CPT/ HCPCS	HOPD Status Indicator	Description	APC	Relative Weight	Payment Rate	National Unadjusted Coinsurance	Minimum Unadjusted Coinsurance
54105	T	Biopsy of penis	0021	10.49	$520.26	$236.51	$104.05
54110	T	Treatment of penis lesion	0181	32.37	$1,605.43	$906.36	$321.09
54111	T	Treat penis lesion, graft	0181	32.37	$1,605.43	$906.36	$321.09
54112	T	Treat penis lesion, graft	0181	32.37	$1,605.43	$906.36	$321.09
54115	T	Treatment of penis lesion	0008	6.15	$305.02	$113.67	$61.00
54120	T	Partial removal of penis	0181	32.37	$1,605.43	$906.36	$321.09
54125	C	Removal of penis					
54130	C	Remove penis & nodes					
54135	C	Remove penis & nodes					
54150	T	Circumcision	0180	13.62	$675.49	$304.87	$135.10
54152	T	Circumcision	0180	13.62	$675.49	$304.87	$135.10
54160	T	Circumcision	0180	13.62	$675.49	$304.87	$135.10
54161	T	Circumcision	0180	13.62	$675.49	$304.87	$135.10
54200	T	Treatment of penis lesion	0165	3.89	$192.92	$91.76	$38.58
54205	T	Treatment of penis lesion	0181	32.37	$1,605.43	$906.36	$321.09
54220	T	Treatment of penis lesion	0165	3.89	$192.92	$91.76	$38.58
54230	N	Prepare penis study					
54231	T	Dynamic cavernosometry	0165	3.89	$192.92	$91.76	$38.58
54235	T	Penile injection	0164	2.17	$107.64	$33.03	$21.53
54240	T	Penis study	0164	2.17	$107.64	$33.03	$21.53
54250	T	Penis study	0165	3.89	$192.92	$91.76	$38.58
54300	T	Revision of penis	0181	32.37	$1,605.43	$906.36	$321.09
54304	T	Revision of penis	0181	32.37	$1,605.43	$906.36	$321.09
54308	T	Reconstruction of urethra	0181	32.37	$1,605.43	$906.36	$321.09
54312	T	Reconstruction of urethra	0181	32.37	$1,605.43	$906.36	$321.09
54316	T	Reconstruction of urethra	0181	32.37	$1,605.43	$906.36	$321.09
54318	T	Reconstruction of urethra	0181	32.37	$1,605.43	$906.36	$321.09
54322	T	Reconstruction of urethra	0181	32.37	$1,605.43	$906.36	$321.09
54324	T	Reconstruction of urethra	0181	32.37	$1,605.43	$906.36	$321.09
54326	T	Reconstruction of urethra	0181	32.37	$1,605.43	$906.36	$321.09
54328	T	Revise penis/urethra	0181	32.37	$1,605.43	$906.36	$321.09
54332	C	Revise penis/urethra					
54336	C	Revise penis/urethra					
54340	T	Secondary urethral surgery	0181	32.37	$1,605.43	$906.36	$321.09
54344	T	Secondary urethral surgery	0181	32.37	$1,605.43	$906.36	$321.09
54348	T	Secondary urethral surgery	0181	32.37	$1,605.43	$906.36	$321.09
54352	T	Reconstruct urethra/penis	0181	32.37	$1,605.43	$906.36	$321.09
54360	T	Penis plastic surgery	0181	32.37	$1,605.43	$906.36	$321.09
54380	T	Repair penis	0181	32.37	$1,605.43	$906.36	$321.09
54385	T	Repair penis	0181	32.37	$1,605.43	$906.36	$321.09
54390	C	Repair penis and bladder					
54400	T	Insert semi-rigid prosthesis	0182	52.11	$2,584.45	$1,525.05	$516.89
54401	T	Insert self-contd prosthesis	0182	52.11	$2,584.45	$1,525.05	$516.89
54402	T	Remove penis prosthesis	0185	32.37	$1,605.43	$906.36	$321.09
54405	T	Insert multi-comp prosthesis	0182	52.11	$2,584.45	$1,525.05	$516.89
54407	T	Remove multi-comp prosthesis	0185	32.37	$1,605.43	$906.36	$321.09
54409	T	Revise penis prosthesis	0185	32.37	$1,605.43	$906.36	$321.09
54420	T	Revision of penis	0181	32.37	$1,605.43	$906.36	$321.09
54430	C	Revision of penis					
54435	T	Revision of penis	0181	32.37	$1,605.43	$906.36	$321.09
54440	T	Repair of penis	0181	32.37	$1,605.43	$906.36	$321.09
54450	T	Preputial stretching	0165	3.89	$192.92	$91.76	$38.58
54500	T	Biopsy of testis	0005	5.41	$268.32	$119.75	$53.66
54505	T	Biopsy of testis	0183	18.26	$905.62	$448.94	$181.12
54510	T	Removal of testis lesion	0183	18.26	$905.62	$448.94	$181.12
*54512	T	Excise lesion testis	0183	18.26	$905.62	$448.94	$181.12
54520	T	Removal of testis	0183	18.26	$905.62	$448.94	$181.12
*54522	T	Orchiectomy, partial	0183	18.26	$905.62	$448.94	$181.12
54530	T	Removal of testis	0154	22.43	$1,112.45	$556.98	$222.49
54535	C	Extensive testis surgery					
54550	T	Exploration for testis	0154	22.43	$1,112.45	$556.98	$222.49
54560	C	Exploration for testis					
54600	T	Reduce testis torsion	0183	18.26	$905.62	$448.94	$181.12
54620	T	Suspension of testis	0183	18.26	$905.62	$448.94	$181.12
54640	T	Suspension of testis	0154	22.43	$1,112.45	$556.98	$222.49
54650	C	Orchiopexy (Fowler-Stephens)					
54660	T	Revision of testis	0183	18.26	$905.62	$448.94	$181.12
54670	T	Repair testis injury	0183	18.26	$905.62	$448.94	$181.12
54680	T	Relocation of testis(es)	0183	18.26	$905.62	$448.94	$181.12
54690	T	Laparoscopy, orchiectomy	0131	41.81	$2,073.61	$1,089.88	$414.72
54692	T	Laparoscopy, orchiopexy	0132	48.91	$2,425.74	$1,239.22	$485.15
54699	T	Laparoscope proc, testis	0130	25.36	$1,257.75	$659.53	$251.55
54700	T	Drainage of scrotum	0183	18.26	$905.62	$448.94	$181.12
54800	T	Biopsy of epididymis	0004	1.84	$91.26	$32.57	$18.25

CPT codes and descriptions only are copyright American Medical Association. All Rights Reserved. Applicable FARS/DFARS Apply.
Copyright American Dental Association. All rights reserved.
*Code is new in 2001.

ADDENDUM B.—HOSPITAL OUTPATIENT DEPARTMENT (HOPD) PAYMENT STATUS BY HCPCS CODE AND RELATED INFORMATION—Continued

CPT/ HCPCS	HOPD Status Indicator	Description	APC	Relative Weight	Payment Rate	National Unadjusted Coinsurance	Minimum Unadjusted Coinsurance
54820	T	Exploration of epididymis	0183	18.26	$905.62	$448.94	$181.12
54830	T	Remove epididymis lesion	0183	18.26	$905.62	$448.94	$181.12
54840	T	Remove epididymis lesion	0183	18.26	$905.62	$448.94	$181.12
54860	T	Removal of epididymis	0183	18.26	$905.62	$448.94	$181.12
54861	T	Removal of epididymis	0183	18.26	$905.62	$448.94	$181.12
54900	T	Fusion of spermatic ducts	0183	18.26	$905.62	$448.94	$181.12
54901	T	Fusion of spermatic ducts	0183	18.26	$905.62	$448.94	$181.12
55000	T	Drainage of hydrocele	0004	1.84	$91.26	$32.57	$18.25
55040	T	Removal of hydrocele	0154	22.43	$1,112.45	$556.98	$222.49
55041	T	Removal of hydroceles	0154	22.43	$1,112.45	$556.98	$222.49
55060	T	Repair of hydrocele	0183	18.26	$905.62	$448.94	$181.12
55100	T	Drainage of scrotum abscess	0008	6.15	$305.02	$113.67	$61.00
55110	T	Explore scrotum	0183	18.26	$905.62	$448.94	$181.12
55120	T	Removal of scrotum lesion	0183	18.26	$905.62	$448.94	$181.12
55150	T	Removal of scrotum	0183	18.26	$905.62	$448.94	$181.12
55175	T	Revision of scrotum	0183	18.26	$905.62	$448.94	$181.12
55180	T	Revision of scrotum	0183	18.26	$905.62	$448.94	$181.12
55200	T	Incision of sperm duct	0183	18.26	$905.62	$448.94	$181.12
55250	T	Removal of sperm duct(s)	0183	18.26	$905.62	$448.94	$181.12
55300	N	Prepare, sperm duct x-ray					
55400	T	Repair of sperm duct	0183	18.26	$905.62	$448.94	$181.12
55450	T	Ligation of sperm duct	0183	18.26	$905.62	$448.94	$181.12
55500	T	Removal of hydrocele	0183	18.26	$905.62	$448.94	$181.12
55520	T	Removal of sperm cord lesion	0183	18.26	$905.62	$448.94	$181.12
55530	T	Revise spermatic cord veins	0183	18.26	$905.62	$448.94	$181.12
55535	T	Revise spermatic cord veins	0154	22.43	$1,112.45	$556.98	$222.49
55540	T	Revise hernia & sperm veins	0154	22.43	$1,112.45	$556.98	$222.49
55550	T	Laparo ligate spermatic vein	0131	41.81	$2,073.61	$1,089.88	$414.72
55559	T	Laparo proc, spermatic cord	0130	25.36	$1,257.75	$659.53	$251.55
55600	C	Incise sperm duct pouch					
55605	C	Incise sperm duct pouch					
55650	C	Remove sperm duct pouch					
55680	T	Remove sperm pouch lesion	0183	18.26	$905.62	$448.94	$181.12
55700	T	Biopsy of prostate	0184	4.94	$245.01	$122.96	$49.00
55705	T	Biopsy of prostate	0184	4.94	$245.01	$122.96	$49.00
55720	T	Drainage of prostate abscess	0162	17.49	$867.44	$427.49	$173.49
55725	T	Drainage of prostate abscess	0162	17.49	$867.44	$427.49	$173.49
55801	C	Removal of prostate					
55810	C	Extensive prostate surgery					
55812	C	Extensive prostate surgery					
55815	C	Extensive prostate surgery					
55821	C	Removal of prostate					
55831	C	Removal of prostate					
55840	C	Extensive prostate surgery					
55842	C	Extensive prostate surgery					
55845	C	Extensive prostate surgery					
55859	T	Percut/needle insert, pros	0162	17.49	$867.44	$427.49	$173.49
55860	T	Surgical exposure, prostate	0165	3.89	$192.92	$91.76	$38.58
55862	C	Extensive prostate surgery					
55865	C	Extensive prostate surgery					
55870	T	Electroejaculation	0197	2.40	$119.03	$49.55	$23.81
*55873	T	Cryoablate prostate	0980	38.67	$1,917.89		$383.58
55899	T	Genital surgery procedure	0164	2.17	$107.64	$33.03	$21.53
55970	E	Sex transformation, M to F					
55980	E	Sex transformation, F to M					
56405	T	I & D of vulva/perineum	0192	2.38	$118.04	$35.33	$23.61
56420	T	Drainage of gland abscess	0192	2.38	$118.04	$35.33	$23.61
56440	T	Surgery for vulva lesion	0194	16.21	$803.96	$395.94	$160.79
56441	T	Lysis of labial lesion(s)	0193	8.93	$442.89	$171.13	$88.58
56501	T	Destruction, vulva lesion(s)	0016	3.53	$175.07	$74.67	$35.01
56515	T	Destruction, vulva lesion(s)	0017	12.45	$617.47	$289.16	$123.49
56605	T	Biopsy of vulva/perineum	0019	4.00	$198.39	$78.91	$39.68
56606	T	Biopsy of vulva/perineum	0019	4.00	$198.39	$78.91	$39.68
56620	T	Partial removal of vulva	0195	18.68	$926.46	$483.80	$185.29
56625	T	Complete removal of vulva	0195	18.68	$926.46	$483.80	$185.29
56630	C	Extensive vulva surgery					
56631	C	Extensive vulva surgery					
56632	C	Extensive vulva surgery					
56633	C	Extensive vulva surgery					
56634	C	Extensive vulva surgery					
56637	C	Extensive vulva surgery					
56640	C	Extensive vulva surgery					
56700	T	Partial removal of hymen	0194	16.21	$803.96	$395.94	$160.79
56720	T	Incision of hymen	0193	8.93	$442.89	$171.13	$88.58

CPT codes and descriptions only are copyright American Medical Association. All Rights Reserved. Applicable FARS/DFARS Apply.
Copyright American Dental Association. All rights reserved.
*Code is new in 2001.

ADDENDUM B.—HOSPITAL OUTPATIENT DEPARTMENT (HOPD) PAYMENT STATUS BY HCPCS CODE AND RELATED INFORMATION—Continued

CPT/ HCPCS	HOPD Status Indicator	Description	APC	Relative Weight	Payment Rate	National Unadjusted Coinsurance	Minimum Unadjusted Coinsurance
56740	T	Remove vagina gland lesion	0194	16.21	$803.96	$395.94	$160.79
56800	T	Repair of vagina	0194	16.21	$803.96	$395.94	$160.79
56805	T	Repair clitoris	0194	16.21	$803.96	$395.94	$160.79
56810	T	Repair of perineum	0194	16.21	$803.96	$395.94	$160.79
57000	T	Exploration of vagina	0194	16.21	$803.96	$395.94	$160.79
57010	T	Drainage of pelvic abscess	0194	16.21	$803.96	$395.94	$160.79
57020	T	Drainage of pelvic fluid	0193	8.93	$442.89	$171.13	$88.58
*57022	T	I & D vaginal hematoma, OB	0007	3.68	$182.51	$72.03	$36.50
*57023	T	I & D vaginal hematoma, trauma	0007	3.68	$182.51	$72.03	$36.50
57061	T	Destruction vagina lesion(s)	0194	16.21	$803.96	$395.94	$160.79
57065	T	Destruction vagina lesion(s)	0194	16.21	$803.96	$395.94	$160.79
57100	T	Biopsy of vagina	0192	2.38	$118.04	$35.33	$23.61
57105	T	Biopsy of vagina	0194	16.21	$803.96	$395.94	$160.79
57106	T	Remove vagina wall, partial	0194	16.21	$803.96	$395.94	$160.79
57107	T	Remove vagina tissue, part	0194	16.21	$803.96	$395.94	$160.79
57109	T	Vaginectomy partial w/nodes	0194	16.21	$803.96	$395.94	$160.79
57110	C	Remove vagina wall, complete					
57111	C	Remove vagina tissue, compl					
57112	C	Vaginectomy w/nodes, compl					
57120	T	Closure of vagina	0194	16.21	$803.96	$395.94	$160.79
57130	T	Remove vagina lesion	0194	16.21	$803.96	$395.94	$160.79
57135	T	Remove vagina lesion	0194	16.21	$803.96	$395.94	$160.79
57150	T	Treat vagina infection	0192	2.38	$118.04	$35.33	$23.61
57160	T	Insert pessary/other device	0191	1.19	$59.02	$17.43	$11.80
57170	T	Fitting of diaphragm/cap	0191	1.19	$59.02	$17.43	$11.80
57180	T	Treat vaginal bleeding	0192	2.38	$118.04	$35.33	$23.61
57200	T	Repair of vagina	0194	16.21	$803.96	$395.94	$160.79
57210	T	Repair vagina/perineum	0194	16.21	$803.96	$395.94	$160.79
57220	T	Revision of urethra	0195	18.68	$926.46	$483.80	$185.29
57230	T	Repair of urethral lesion	0194	16.21	$803.96	$395.94	$160.79
57240	T	Repair bladder & vagina	0195	18.68	$926.46	$483.80	$185.29
57250	T	Repair rectum & vagina	0195	18.68	$926.46	$483.80	$185.29
57260	T	Repair of vagina	0195	18.68	$926.46	$483.80	$185.29
57265	T	Extensive repair of vagina	0195	18.68	$926.46	$483.80	$185.29
57268	T	Repair of bowel bulge	0195	18.68	$926.46	$483.80	$185.29
57270	C	Repair of bowel pouch					
57280	C	Suspension of vagina					
57282	C	Repair of vaginal prolapse					
57284	T	Repair paravaginal defect	0195	18.68	$926.46	$483.80	$185.29
*57287	T	Revise/remove sling repair	0195	18.68	$926.46	$483.80	$185.29
57288	T	Repair bladder defect	0195	18.68	$926.46	$483.80	$185.29
57289	T	Repair bladder & vagina	0195	18.68	$926.46	$483.80	$185.29
57291	T	Construction of vagina	0195	18.68	$926.46	$483.80	$185.29
57292	C	Construct vagina with graft					
57300	T	Repair rectum-vagina fistula	0195	18.68	$926.46	$483.80	$185.29
57305	C	Repair rectum-vagina fistula					
57307	C	Fistula repair & colostomy					
57308	C	Fistula repair, transperine					
57310	T	Repair urethrovaginal lesion	0195	18.68	$926.46	$483.80	$185.29
57311	C	Repair urethrovaginal lesion					
57320	T	Repair bladder-vagina lesion	0195	18.68	$926.46	$483.80	$185.29
57330	T	Repair bladder-vagina lesion	0195	18.68	$926.46	$483.80	$185.29
57335	C	Repair vagina					
57400	T	Dilation of vagina	0194	16.21	$803.96	$395.94	$160.79
57410	T	Pelvic examination	0194	16.21	$803.96	$395.94	$160.79
57415	T	Remove vaginal foreign body	0194	16.21	$803.96	$395.94	$160.79
57452	T	Examination of vagina	0191	1.19	$59.02	$17.43	$11.80
57454	T	Vagina examination & biopsy	0192	2.38	$118.04	$35.33	$23.61
57460	T	Cervix excision	0193	8.93	$442.89	$171.13	$88.58
57500	T	Biopsy of cervix	0193	8.93	$442.89	$171.13	$88.58
57505	T	Endocervical curettage	0192	2.38	$118.04	$35.33	$23.61
57510	T	Cauterization of cervix	0193	8.93	$442.89	$171.13	$88.58
57511	T	Cryocautery of cervix	0192	2.38	$118.04	$35.33	$23.61
57513	T	Laser surgery of cervix	0193	8.93	$442.89	$171.13	$88.58
57520	T	Conization of cervix	0194	16.21	$803.96	$395.94	$160.79
57522	T	Conization of cervix	0195	18.68	$926.46	$483.80	$185.29
57530	T	Removal of cervix	0195	18.68	$926.46	$483.80	$185.29
57531	C	Removal of cervix, radical					
57540	C	Removal of residual cervix					
57545	C	Remove cervix/repair pelvis					
57550	T	Removal of residual cervix	0195	18.68	$926.46	$483.80	$185.29
57555	T	Remove cervix/repair vagina	0195	18.68	$926.46	$483.80	$185.29
57556	T	Remove cervix, repair bowel	0195	18.68	$926.46	$483.80	$185.29
57700	T	Revision of cervix	0194	16.21	$803.96	$395.94	$160.79

CPT codes and descriptions only are copyright American Medical Association. All Rights Reserved. Applicable FARS/DFARS Apply.
Copyright American Dental Association. All rights reserved.
*Code is new in 2001.

ADDENDUM B.—HOSPITAL OUTPATIENT DEPARTMENT (HOPD) PAYMENT STATUS BY HCPCS CODE AND RELATED INFORMATION—Continued

CPT/ HCPCS	HOPD Status Indicator	Description	APC	Relative Weight	Payment Rate	National Unadjusted Coinsurance	Minimum Unadjusted Coinsurance
57720	T	Revision of cervix	0194	16.21	$803.96	$395.94	$160.79
57800	T	Dilation of cervical canal	0193	8.93	$442.89	$171.13	$88.58
57820	T	D & c of residual cervix	0196	14.47	$717.66	$357.98	$143.53
58100	T	Biopsy of uterus lining	0191	1.19	$59.02	$17.43	$11.80
58120	T	Dilation and curettage	0196	14.47	$717.66	$357.98	$143.53
58140	C	Removal of uterus lesion					
58145	T	Removal of uterus lesion	0195	18.68	$926.46	$483.80	$185.29
58150	C	Total hysterectomy					
58152	C	Total hysterectomy					
58180	C	Partial hysterectomy					
58200	C	Extensive hysterectomy					
58210	C	Extensive hysterectomy					
58240	C	Removal of pelvis contents					
58260	C	Vaginal hysterectomy					
58262	C	Vaginal hysterectomy					
58263	C	Vaginal hysterectomy					
58267	C	Hysterectomy & vagina repair					
58270	C	Hysterectomy & vagina repair					
58275	C	Hysterectomy/revise vagina					
58280	C	Hysterectomy/revise vagina					
58285	C	Extensive hysterectomy					
58300	E	Insert intrauterine device					
58301	T	Remove intrauterine device	0191	1.19	$59.02	$17.43	$11.80
58321	T	Artificial insemination	0197	2.40	$119.03	$49.55	$23.81
58322	T	Artificial insemination	0197	2.40	$119.03	$49.55	$23.81
58323	T	Sperm washing	0197	2.40	$119.03	$49.55	$23.81
58340	N	Catheter for hysterography					
58345	T	Reopen fallopian tube	0194	16.21	$803.96	$395.94	$160.79
58350	T	Reopen fallopian tube	0194	16.21	$803.96	$395.94	$160.79
*58353	T	Endometr ablate, thermal	0193	8.93	$442.89	$171.13	$88.58
58400	C	Suspension of uterus					
58410	C	Suspension of uterus					
58520	C	Repair of ruptured uterus					
58540	C	Revision of uterus					
58550	T	Laparo-asst vag hysterectomy	0132	48.91	$2,425.74	$1,239.22	$485.15
58551	T	Laparoscopy, remove myoma	0131	41.81	$2,073.61	$1,089.88	$414.72
58555	T	Hysteroscopy, dx, sep proc	0191	1.19	$59.02	$17.43	$11.80
58558	T	Hysteroscopy, biopsy	0190	17.85	$885.29	$443.89	$177.06
58559	T	Hysteroscopy, lysis	0190	17.85	$885.29	$443.89	$177.06
58560	T	Hysteroscopy, resect septum	0190	17.85	$885.29	$443.89	$177.06
58561	T	Hysteroscopy, remove myoma	0190	17.85	$885.29	$443.89	$177.06
58562	T	Hysteroscopy, remove fb	0190	17.85	$885.29	$443.89	$177.06
58563	T	Hysteroscopy, ablation	0190	17.85	$885.29	$443.89	$177.06
58578	T	Laparo proc, uterus	0190	17.85	$885.29	$443.89	$177.06
58579	T	Hysteroscope procedure	0190	17.85	$885.29	$443.89	$177.06
58600	T	Division of fallopian tube	0194	16.21	$803.96	$395.94	$160.79
58605	C	Division of fallopian tube					
58611	C	Ligate oviduct(s) add-on					
58615	T	Occlude fallopian tube(s)	0194	16.21	$803.96	$395.94	$160.79
58660	T	Laparoscopy, lysis	0131	41.81	$2,073.61	$1,089.88	$414.72
58661	T	Laparoscopy, remove adnexa	0131	41.81	$2,073.61	$1,089.88	$414.72
58662	T	Laparoscopy, excise lesions	0131	41.81	$2,073.61	$1,089.88	$414.72
58670	T	Laparoscopy, tubal cautery	0131	41.81	$2,073.61	$1,089.88	$414.72
58671	T	Laparoscopy, tubal block	0131	41.81	$2,073.61	$1,089.88	$414.72
58672	T	Laparoscopy, fimbrioplasty	0131	41.81	$2,073.61	$1,089.88	$414.72
58673	T	Laparoscopy, salpingostomy	0131	41.81	$2,073.61	$1,089.88	$414.72
58679	T	Laparo proc, oviduct-ovary	0130	25.36	$1,257.75	$659.53	$251.55
58700	C	Removal of fallopian tube					
58720	C	Removal of ovary/tube(s)					
58740	C	Revise fallopian tube(s)					
58750	C	Repair oviduct					
58752	C	Revise ovarian tube(s)					
58760	C	Remove tubal obstruction					
58770	C	Create new tubal opening					
58800	T	Drainage of ovarian cyst(s)	0195	18.68	$926.46	$483.80	$185.29
58805	C	Drainage of ovarian cyst(s)					
58820	T	Drain ovary abscess, open	0195	18.68	$926.46	$483.80	$185.29
58822	C	Drain ovary abscess, percut					
58823	C	Drain pelvic abscess, percut					
58825	C	Transposition, ovary(s)					
58900	T	Biopsy of ovary(s)	0195	18.68	$926.46	$483.80	$185.29
58920	T	Partial removal of ovary(s)	0195	18.68	$926.46	$483.80	$185.29
58925	T	Removal of ovarian cyst(s)	0195	18.68	$926.46	$483.80	$185.29
58940	C	Removal of ovary(s)					

CPT codes and descriptions only are copyright American Medical Association. All Rights Reserved. Applicable FARS/DFARS Apply.
Copyright American Dental Association. All rights reserved.
*Code is new in 2001.

ADDENDUM B.—HOSPITAL OUTPATIENT DEPARTMENT (HOPD) PAYMENT STATUS BY HCPCS CODE AND RELATED INFORMATION—Continued

CPT/ HCPCS	HOPD Status Indicator	Description	APC	Relative Weight	Payment Rate	National Unadjusted Coinsurance	Minimum Unadjusted Coinsurance
58943	C	Removal of ovary(s)					
58950	C	Resect ovarian malignancy					
58951	C	Resect ovarian malignancy					
58952	C	Resect ovarian malignancy					
58960	C	Exploration of abdomen					
58970	T	Retrieval of oocyte	0194	16.21	$803.96	$395.94	$160.79
58974	T	Transfer of embryo	0197	2.40	$119.03	$49.55	$23.81
58976	T	Transfer of embryo	0197	2.40	$119.03	$49.55	$23.81
58999	T	Genital surgery procedure	0019	4.00	$198.39	$78.91	$39.68
59000	T	Amniocentesis	0198	1.34	$66.46	$33.03	$13.29
59012	T	Fetal cord puncture,prenatal	0198	1.34	$66.46	$33.03	$13.29
59015	T	Chorion biopsy	0198	1.34	$66.46	$33.03	$13.29
59020	T	Fetal contract stress test	0198	1.34	$66.46	$33.03	$13.29
59025	T	Fetal non-stress test	0198	1.34	$66.46	$33.03	$13.29
59030	T	Fetal scalp blood sample	0198	1.34	$66.46	$33.03	$13.29
59050	T	Fetal monitor w/report	0198	1.34	$66.46	$33.03	$13.29
59051	E	Fetal monitor/interpret only					
59100	C	Remove uterus lesion					
59120	C	Treat ectopic pregnancy					
59121	C	Treat ectopic pregnancy					
59130	C	Treat ectopic pregnancy					
59135	C	Treat ectopic pregnancy					
59136	C	Treat ectopic pregnancy					
59140	C	Treat ectopic pregnancy					
59150	T	Treat ectopic pregnancy	0131	41.81	$2,073.61	$1,089.88	$414.72
59151	T	Treat ectopic pregnancy	0131	41.81	$2,073.61	$1,089.88	$414.72
59160	T	D & c after delivery	0196	14.47	$717.66	$357.98	$143.53
59200	T	Insert cervical dilator	0191	1.19	$59.02	$17.43	$11.80
59300	T	Episiotomy or vaginal repair	0194	16.21	$803.96	$395.94	$160.79
59320	T	Revision of cervix	0194	16.21	$803.96	$395.94	$160.79
59325	C	Revision of cervix					
59350	C	Repair of uterus					
59400	E	Obstetrical care					
59409	T	Obstetrical care	0199	11.20	$555.48	$157.83	$111.10
59410	E	Obstetrical care					
59412	T	Antepartum manipulation	0199	11.20	$555.48	$157.83	$111.10
59414	T	Deliver placenta	0199	11.20	$555.48	$157.83	$111.10
59425	E	Antepartum care only					
59426	E	Antepartum care only					
59430	E	Care after delivery					
59510	E	Cesarean delivery					
59514	C	Cesarean delivery only					
59515	E	Cesarean delivery					
59525	C	Remove uterus after cesarean					
59610	E	Vbac delivery					
59612	T	Vbac delivery only	0199	11.20	$555.48	$157.83	$111.10
59614	E	Vbac care after delivery					
59618	E	Attempted vbac delivery					
59620	C	Attempted vbac delivery only					
59622	E	Attempted vbac after care					
59812	T	Treatment of miscarriage	0201	13.00	$644.75	$329.65	$128.95
59820	T	Care of miscarriage	0201	13.00	$644.75	$329.65	$128.95
59821	T	Treatment of miscarriage	0201	13.00	$644.75	$329.65	$128.95
59830	C	Treat uterus infection					
59840	T	Abortion	0200	13.89	$688.89	$373.23	$137.78
59841	T	Abortion	0200	13.89	$688.89	$373.23	$137.78
59850	C	Abortion					
59851	C	Abortion					
59852	C	Abortion					
59855	C	Abortion					
59856	C	Abortion					
59857	C	Abortion					
59866	T	Abortion (mpr)	0198	1.34	$66.46	$33.03	$13.29
59870	T	Evacuate mole of uterus	0201	13.00	$644.75	$329.65	$128.95
59871	T	Remove cerclage suture	0194	16.21	$803.96	$395.94	$160.79
59898	T	Laparo proc, ob care/deliver	0130	25.36	$1,257.75	$659.53	$251.55
59899	T	Maternity care procedure	0198	1.34	$66.46	$33.03	$13.29
60000	T	Drain thyroid/tongue cyst	0253	12.02	$596.14	$284.00	$119.23
60001	T	Aspirate/inject thyriod cyst	0002	0.62	$30.75	$17.66	$6.15
60100	T	Biopsy of thyroid	0004	1.84	$91.26	$32.57	$18.25
60200	T	Remove thyroid lesion	0114	19.56	$970.10	$493.78	$194.02
60210	T	Partial thyroid excision	0114	19.56	$970.10	$493.78	$194.02
60212	T	Parital thyroid excision	0114	19.56	$970.10	$493.78	$194.02
60220	T	Partial removal of thyroid	0114	19.56	$970.10	$493.78	$194.02

CPT codes and descriptions only are copyright American Medical Association. All Rights Reserved. Applicable FARS/DFARS Apply.
Copyright American Dental Association. All rights reserved.
*Code is new in 2001.

ADDENDUM B.—HOSPITAL OUTPATIENT DEPARTMENT (HOPD) PAYMENT STATUS BY HCPCS CODE AND RELATED INFORMATION—Continued

CPT/ HCPCS	HOPD Status Indicator	Description	APC	Relative Weight	Payment Rate	National Unadjusted Coinsurance	Minimum Unadjusted Coinsurance
60225	T	Partial removal of thyroid	0114	19.56	$970.10	$493.78	$194.02
60240	T	Removal of thyroid	0114	19.56	$970.10	$493.78	$194.02
60252	T	Removal of thyroid	0256	25.40	$1,259.74	$623.05	$251.95
60254	C	Extensive thyroid surgery					
60260	T	Repeat thyroid surgery	0256	25.40	$1,259.74	$623.05	$251.95
60270	C	Removal of thyroid					
60271	C	Removal of thyroid					
60280	T	Remove thyroid duct lesion	0114	19.56	$970.10	$493.78	$194.02
60281	T	Remove thyroid duct lesion	0114	19.56	$970.10	$493.78	$194.02
60500	T	Explore parathyroid glands	0256	25.40	$1,259.74	$623.05	$251.95
60502	C	Re-explore parathyroids					
60505	C	Explore parathyroid glands					
60512	T	Autotransplant parathyroid	0020	6.51	$322.87	$130.53	$64.57
60520	C	Removal of thymus gland					
60521	C	Removal of thymus gland					
60522	C	Removal of thymus gland					
60540	C	Explore adrenal gland					
60545	C	Explore adrenal gland					
60600	C	Remove carotid body lesion					
60605	C	Remove carotid body lesion					
60650	C	Laparoscopy adrenalectomy					
60659	T	Laparo proc, endocrine	0130	25.36	$1,257.75	$659.53	$251.55
60699	T	Endocrine surgery procedure	0004	1.84	$91.26	$32.57	$18.25
61000	T	Remove cranial cavity fluid	0212	3.64	$180.53	$88.78	$36.11
61001	T	Remove cranial cavity fluid	0212	3.64	$180.53	$88.78	$36.11
61020	T	Remove brain cavity fluid	0212	3.64	$180.53	$88.78	$36.11
61026	T	Injection into brain canal	0212	3.64	$180.53	$88.78	$36.11
61050	T	Remove brain canal fluid	0212	3.64	$180.53	$88.78	$36.11
61055	T	Injection into brain canal	0212	3.64	$180.53	$88.78	$36.11
61070	T	Brain canal shunt procedure	0212	3.64	$180.53	$88.78	$36.11
61105	C	Twist drill hole					
61107	C	Drill skull for implantation					
61108	C	Drill skull for drainage					
61120	C	Burr hole for puncture					
61140	C	Pierce skull for biopsy					
61150	C	Pierce skull for drainage					
61151	C	Pierce skull for drainage					
61154	C	Pierce skull & remove clot					
61156	C	Pierce skull for drainage					
61210	C	Pierce skull, implant device					
61215	T	Insert brain-fluid device	0224	17.89	$887.27	$453.41	$177.45
61250	C	Pierce skull & explore					
61253	C	Pierce skull & explore					
61304	C	Open skull for exploration					
61305	C	Open skull for exploration					
61312	C	Open skull for drainage					
61313	C	Open skull for drainage					
61314	C	Open skull for drainage					
61315	C	Open skull for drainage					
61320	C	Open skull for drainage					
61321	C	Open skull for drainage					
61330	T	Decompress eye socket	0256	25.40	$1,259.74	$623.05	$251.95
61332	C	Explore/biopsy eye socket					
61333	C	Explore orbit/remove lesion					
61334	C	Explore orbit/remove object					
61340	C	Relieve cranial pressure					
61343	C	Incise skull (press relief)					
61345	C	Relieve cranial pressure					
61440	C	Incise skull for surgery					
61450	C	Incise skull for surgery					
61458	C	Incise skull for brain wound					
61460	C	Incise skull for surgery					
61470	C	Incise skull for surgery					
61480	C	Incise skull for surgery					
61490	C	Incise skull for surgery					
61500	C	Removal of skull lesion					
61501	C	Remove infected skull bone					
61510	C	Removal of brain lesion					
61512	C	Remove brain lining lesion					
61514	C	Removal of brain abscess					
61516	C	Removal of brain lesion					
61518	C	Removal of brain lesion					
61519	C	Remove brain lining lesion					
61520	C	Removal of brain lesion					

CPT codes and descriptions only are copyright American Medical Association. All Rights Reserved. Applicable FARS/DFARS Apply.
Copyright American Dental Association. All rights reserved.
*Code is new in 2001.

ADDENDUM B.—HOSPITAL OUTPATIENT DEPARTMENT (HOPD) PAYMENT STATUS BY HCPCS CODE AND RELATED INFORMATION—Continued

CPT/ HCPCS	HOPD Status Indicator	Description	APC	Relative Weight	Payment Rate	National Unadjusted Coinsurance	Minimum Unadjusted Coinsurance
61521	C	Removal of brain lesion					
61522	C	Removal of brain abscess					
61524	C	Removal of brain lesion					
61526	C	Removal of brain lesion					
61530	C	Removal of brain lesion					
61531	C	Implant brain electrodes					
61533	C	Implant brain electrodes					
61534	C	Removal of brain lesion					
61535	C	Remove brain electrodes					
61536	C	Removal of brain lesion					
61538	C	Removal of brain tissue					
61539	C	Removal of brain tissue					
61541	C	Incision of brain tissue					
61542	C	Removal of brain tissue					
61543	C	Removal of brain tissue					
61544	C	Remove & treat brain lesion					
61545	C	Excision of brain tumor					
61546	C	Removal of pituitary gland					
61548	C	Removal of pituitary gland					
61550	C	Release of skull seams					
61552	C	Release of skull seams					
61556	C	Incise skull/sutures					
61557	C	Incise skull/sutures					
61558	C	Excision of skull/sutures					
61559	C	Excision of skull/sutures					
61563	C	Excision of skull tumor					
61564	C	Excision of skull tumor					
61570	C	Remove foreign body, brain					
61571	C	Incise skull for brain wound					
61575	C	Skull base/brainstem surgery					
61576	C	Skull base/brainstem surgery					
61580	C	Craniofacial approach, skull					
61581	C	Craniofacial approach, skull					
61582	C	Craniofacial approach, skull					
61583	C	Craniofacial approach, skull					
61584	C	Orbitocranial approach/skull					
61585	C	Orbitocranial approach/skull					
61586	C	Resect nasopharynx, skull					
61590	C	Infratemporal approach/skull					
61591	C	Infratemporal approach/skull					
61592	C	Orbitocranial approach/skull					
61595	C	Transtemporal approach/skull					
61596	C	Transcochlear approach/skull					
61597	C	Transcondylar approach/skull					
61598	C	Transpetrosal approach/skull					
61600	C	Resect/excise cranial lesion					
61601	C	Resect/excise cranial lesion					
61605	C	Resect/excise cranial lesion					
61606	C	Resect/excise cranial lesion					
61607	C	Resect/excise cranial lesion					
61608	C	Resect/excise cranial lesion					
61609	C	Transect artery, sinus					
61610	C	Transect artery, sinus					
61611	C	Transect artery, sinus					
61612	C	Transect artery, sinus					
61613	C	Remove aneurysm, sinus					
61615	C	Resect/excise lesion, skull					
61616	C	Resect/excise lesion, skull					
61618	C	Repair dura					
61619	C	Repair dura					
61624	C	Occlusion/embolization cath					
61626	C	Occlusion/embolization cath					
61680	C	Intracranial vessel surgery					
61682	C	Intracranial vessel surgery					
61684	C	Intracranial vessel surgery					
61686	C	Intracranial vessel surgery					
61690	C	Intracranial vessel surgery					
61692	C	Intracranial vessel surgery					
*61697	C	Brain aneurysm repair, complex					
*61698	C	Brain aneurysm repair, complex					
61700	C	Inner skull vessel surgery					
61702	C	Inner skull vessel surgery					
61703	C	Clamp neck artery					
61705	C	Revise circulation to head					

CPT codes and descriptions only are copyright American Medical Association. All Rights Reserved. Applicable FARS/DFARS Apply.
Copyright American Dental Association. All rights reserved.
*Code is new in 2001.

ADDENDUM B.—HOSPITAL OUTPATIENT DEPARTMENT (HOPD) PAYMENT STATUS BY HCPCS CODE AND RELATED INFORMATION—Continued

CPT/ HCPCS	HOPD Status Indicator	Description	APC	Relative Weight	Payment Rate	National Unadjusted Coinsurance	Minimum Unadjusted Coinsurance
61708	C	Revise circulation to head					
61710	C	Revise circulation to head					
61711	C	Fusion of skull arteries					
61720	C	Incise skull/brain surgery					
61735	C	Incise skull/brain surgery					
61750	C	Incise skull/brain biopsy					
61751	C	Brain biopsy w/ ct/mr guide					
61760	C	Implant brain electrodes					
61770	C	Incise skull for treatment					
61790	T	Treat trigeminal nerve	0220	13.96	$692.36	$326.21	$138.47
61791	C	Treat trigeminal tract					
61793	E	Focus radiation beam					
61795	S	Brain surgery using computer	0302	8.21	$407.18	$216.55	$81.44
61850	C	Implant neuroelectrodes					
61860	C	Implant neuroelectrodes					
61862	C	Implant neurostimul, subcort					
61870	C	Implant neuroelectrodes					
61875	C	Implant neuroelectrodes					
61880	T	Revise/remove neuroelectrode	0105	15.06	$746.92	$372.32	$149.38
61885	T	Implant neurostim one array	0222	124.43	$6,171.23	$2,955.13	$1,234.25
61886	T	Implant neurostim arrays	0222	124.43	$6,171.23	$2,955.13	$1,234.25
61888	T	Revise/remove neuroreceiver	0105	15.06	$746.92	$372.32	$149.38
62000	C	Treat skull fracture					
62005	C	Treat skull fracture					
62010	C	Treatment of head injury					
62100	C	Repair brain fluid leakage					
62115	C	Reduction of skull defect					
62116	C	Reduction of skull defect					
62117	C	Reduction of skull defect					
62120	C	Repair skull cavity lesion					
62121	C	Incise skull repair					
62140	C	Repair of skull defect					
62141	C	Repair of skull defect					
62142	C	Remove skull plate/flap					
62143	C	Replace skull plate/flap					
62145	C	Repair of skull & brain					
62146	C	Repair of skull with graft					
62147	C	Repair of skull with graft					
62180	C	Establish brain cavity shunt					
62190	C	Establish brain cavity shunt					
62192	C	Establish brain cavity shunt					
62194	T	Replace/irrigate catheter	0121	2.36	$117.05	$52.53	$23.41
62200	C	Establish brain cavity shunt					
62201	C	Establish brain cavity shunt					
62220	C	Establish brain cavity shunt					
62223	C	Establish brain cavity shunt					
62225	T	Replace/irrigate catheter	0121	2.36	$117.05	$52.53	$23.41
62230	T	Replace/revise brain shunt	0224	17.89	$887.27	$453.41	$177.45
*62252	S	CSF shunt reprogram	0102	0.45	$22.32	$12.62	$4.46
62256	C	Remove brain cavity shunt					
62258	C	Replace brain cavity shunt					
62263	T	Lysis epidural adhesions	0212	3.64	$180.53	$88.78	$36.11
62268	T	Drain spinal cord cyst	0212	3.64	$180.53	$88.78	$36.11
62269	T	Needle biopsy, spinal cord	0005	5.41	$268.32	$119.75	$53.66
62270	T	Spinal fluid tap, diagnostic	0210	3.00	$148.79	$62.40	$29.76
62272	T	Drain spinal fluid	0210	3.00	$148.79	$62.40	$29.76
62273	T	Treat epidural spine lesion	0212	3.64	$180.53	$88.78	$36.11
62280	T	Treat spinal cord lesion	0212	3.64	$180.53	$88.78	$36.11
62281	T	Treat spinal cord lesion	0212	3.64	$180.53	$88.78	$36.11
62282	T	Treat spinal canal lesion	0212	3.64	$180.53	$88.78	$36.11
62284	N	Injection for myelogram					
62287	T	Percutaneous diskectomy	0220	13.96	$692.36	$326.21	$138.47
62290	N	Inject for spine disk x-ray					
62291	N	Inject for spine disk x-ray					
62292	T	Injection into disk lesion	0212	3.64	$180.53	$88.78	$36.11
62294	T	Injection into spinal artery	0212	3.64	$180.53	$88.78	$36.11
62310	T	Inject spine c/t	0212	3.64	$180.53	$88.78	$36.11
62311	T	Inject spine l/s (cd)	0212	3.64	$180.53	$88.78	$36.11
62318	T	Inject spine w/cath, c/t	0212	3.64	$180.53	$88.78	$36.11
62319	T	Inject spine w/cath l/s (cd)	0212	3.64	$180.53	$88.78	$36.11
62350	T	Implant spinal canal cath	0223	7.05	$349.65	$154.27	$69.93
62351	C	Implant spinal canal cath					
62355	T	Remove spinal canal catheter	0105	15.06	$746.92	$372.32	$149.38
62360	T	Insert spine infusion device	0226	5.62	$278.73	$109.42	$55.75

CPT codes and descriptions only are copyright American Medical Association. All Rights Reserved. Applicable FARS/DFARS Apply.
Copyright American Dental Association. All rights reserved.
*Code is new in 2001.

ADDENDUM B.—HOSPITAL OUTPATIENT DEPARTMENT (HOPD) PAYMENT STATUS BY HCPCS CODE AND RELATED INFORMATION—Continued

CPT/ HCPCS	HOPD Status Indicator	Description	APC	Relative Weight	Payment Rate	National Unadjusted Coinsurance	Minimum Unadjusted Coinsurance
62361	T	Implant spine infusion pump	0227	11.17	$553.99	$330.11	$110.80
62362	T	Implant spine infusion pump	0227	11.17	$553.99	$330.11	$110.80
62365	T	Remove spine infusion device	0105	15.06	$746.92	$372.32	$149.38
62367	S	Analyze spine infusion pump	0102	0.45	$22.32	$12.62	$4.46
62368	S	Analyze spine infusion pump	0102	0.45	$22.32	$12.62	$4.46
63001	C	Removal of spinal lamina					
63003	C	Removal of spinal lamina					
63005	C	Removal of spinal lamina					
63011	C	Removal of spinal lamina					
63012	C	Removal of spinal lamina					
63015	C	Removal of spinal lamina					
63016	C	Removal of spinal lamina					
63017	C	Removal of spinal lamina					
63020	C	Neck spine disk surgery					
63030	C	Low back disk surgery					
63035	C	Spinal disk surgery add-on					
63040	C	Neck spine disk surgery					
63042	C	Low back disk surgery					
*63043	C	Laminotomy, addl cervical					
*63044	C	Laminotomy, addl lumbar					
63045	C	Removal of spinal lamina					
63046	C	Removal of spinal lamina					
63047	C	Removal of spinal lamina					
63048	C	Remove spinal lamina add-on					
63055	C	Decompress spinal cord					
63056	C	Decompress spinal cord					
63057	C	Decompress spine cord add-on					
63064	C	Decompress spinal cord					
63066	C	Decompress spine cord add-on					
63075	C	Neck spine disk surgery					
63076	C	Neck spine disk surgery					
63077	C	Spine disk surgery, thorax					
63078	C	Spine disk surgery, thorax					
63081	C	Removal of vertebral body					
63082	C	Remove vertebral body add-on					
63085	C	Removal of vertebral body					
63086	C	Remove vertebral body add-on					
63087	C	Removal of vertebral body					
63088	C	Remove vertebral body add-on					
63090	C	Removal of vertebral body					
63091	C	Remove vertebral body add-on					
63170	C	Incise spinal cord tract(s)					
63172	C	Drainage of spinal cyst					
63173	C	Drainage of spinal cyst					
63180	C	Revise spinal cord ligaments					
63182	C	Revise spinal cord ligaments					
63185	C	Incise spinal column/nerves					
63190	C	Incise spinal column/nerves					
63191	C	Incise spinal column/nerves					
63194	C	Incise spinal column & cord					
63195	C	Incise spinal column & cord					
63196	C	Incise spinal column & cord					
63197	C	Incise spinal column & cord					
63198	C	Incise spinal column & cord					
63199	C	Incise spinal column & cord					
63200	C	Release of spinal cord					
63250	C	Revise spinal cord vessels					
63251	C	Revise spinal cord vessels					
63252	C	Revise spinal cord vessels					
63265	C	Excise intraspinal lesion					
63266	C	Excise intraspinal lesion					
63267	C	Excise intraspinal lesion					
63268	C	Excise intraspinal lesion					
63270	C	Excise intraspinal lesion					
63271	C	Excise intraspinal lesion					
63272	C	Excise intraspinal lesion					
63273	C	Excise intraspinal lesion					
63275	C	Biopsy/excise spinal tumor					
63276	C	Biopsy/excise spinal tumor					
63277	C	Biopsy/excise spinal tumor					
63278	C	Biopsy/excise spinal tumor					
63280	C	Biopsy/excise spinal tumor					
63281	C	Biopsy/excise spinal tumor					
63282	C	Biopsy/excise spinal tumor					

CPT codes and descriptions only are copyright American Medical Association. All Rights Reserved. Applicable FARS/DFARS Apply.
Copyright American Dental Association. All rights reserved.
*Code is new in 2001.

ADDENDUM B.—HOSPITAL OUTPATIENT DEPARTMENT (HOPD) PAYMENT STATUS BY HCPCS CODE AND RELATED INFORMATION—Continued

CPT/ HCPCS	HOPD Status Indicator	Description	APC	Relative Weight	Payment Rate	National Unadjusted Coinsurance	Minimum Unadjusted Coinsurance
63283	C	Biopsy/excise spinal tumor					
63285	C	Biopsy/excise spinal tumor					
63286	C	Biopsy/excise spinal tumor					
63287	C	Biopsy/excise spinal tumor					
63290	C	Biopsy/excise spinal tumor					
63300	C	Removal of vertebral body					
63301	C	Removal of vertebral body					
63302	C	Removal of vertebral body					
63303	C	Removal of vertebral body					
63304	C	Removal of vertebral body					
63305	C	Removal of vertebral body					
63306	C	Removal of vertebral body					
63307	C	Removal of vertebral body					
63308	C	Remove vertebral body add-on					
63600	T	Remove spinal cord lesion	0220	13.96	$692.36	$326.21	$138.47
63610	T	Stimulation of spinal cord	0220	13.96	$692.36	$326.21	$138.47
63615	T	Remove lesion of spinal cord	0220	13.96	$692.36	$326.21	$138.47
63650	T	Implant neuroelectrodes	0225	17.72	$878.84	$408.33	$175.77
63655	C	Implant neuroelectrodes					
63660	T	Revise/remove neuroelectrode	0105	15.06	$746.92	$372.32	$149.38
63685	T	Implant neuroreceiver	0222	124.43	$6,171.23	$2,955.13	$1,234.25
63688	T	Revise/remove neuroreceiver	0105	15.06	$746.92	$372.32	$149.38
63700	C	Repair of spinal herniation					
63702	C	Repair of spinal herniation					
63704	C	Repair of spinal herniation					
63706	C	Repair of spinal herniation					
63707	C	Repair spinal fluid leakage					
63709	C	Repair spinal fluid leakage					
63710	C	Graft repair of spine defect					
63740	C	Install spinal shunt					
63741	T	Install spinal shunt	0228	25.06	$1,242.88	$696.46	$248.58
63744	T	Revision of spinal shunt	0228	25.06	$1,242.88	$696.46	$248.58
63746	T	Removal of spinal shunt	0109	6.53	$323.86	$133.51	$64.77
64400	T	Injection for nerve block	0211	3.32	$164.66	$74.78	$32.93
64402	T	Injection for nerve block	0211	3.32	$164.66	$74.78	$32.93
64405	T	Injection for nerve block	0211	3.32	$164.66	$74.78	$32.93
64408	T	Injection for nerve block	0211	3.32	$164.66	$74.78	$32.93
64410	T	Injection for nerve block	0211	3.32	$164.66	$74.78	$32.93
64412	T	Injection for nerve block	0211	3.32	$164.66	$74.78	$32.93
64413	T	Injection for nerve block	0211	3.32	$164.66	$74.78	$32.93
64415	T	Injection for nerve block	0211	3.32	$164.66	$74.78	$32.93
64417	T	Injection for nerve block	0211	3.32	$164.66	$74.78	$32.93
64418	T	Injection for nerve block	0211	3.32	$164.66	$74.78	$32.93
64420	T	Injection for nerve block	0211	3.32	$164.66	$74.78	$32.93
64421	T	Injection for nerve block	0211	3.32	$164.66	$74.78	$32.93
64425	T	Injection for nerve block	0211	3.32	$164.66	$74.78	$32.93
64430	T	Injection for nerve block	0211	3.32	$164.66	$74.78	$32.93
64435	T	Injection for nerve block	0211	3.32	$164.66	$74.78	$32.93
64445	T	Injection for nerve block	0211	3.32	$164.66	$74.78	$32.93
64450	T	Injection for nerve block	0211	3.32	$164.66	$74.78	$32.93
64470	T	Inj paravertebral c/t	0211	3.32	$164.66	$74.78	$32.93
64472	T	Inj paravertebral c/t add-on	0211	3.32	$164.66	$74.78	$32.93
64475	T	Inj paravertebral l/s	0211	3.32	$164.66	$74.78	$32.93
64476	T	Inj paravertebral l/s add-on	0211	3.32	$164.66	$74.78	$32.93
64479	T	Inj foramen epidural c/t	0211	3.32	$164.66	$74.78	$32.93
64480	T	Inj foramen epidural add-on	0211	3.32	$164.66	$74.78	$32.93
64483	T	Inj foramen epidural l/s	0211	3.32	$164.66	$74.78	$32.93
64484	T	Inj foramen epidural add-on	0211	3.32	$164.66	$74.78	$32.93
64505	T	Injection for nerve block	0211	3.32	$164.66	$74.78	$32.93
64508	T	Injection for nerve block	0211	3.32	$164.66	$74.78	$32.93
64510	T	Injection for nerve block	0211	3.32	$164.66	$74.78	$32.93
64520	T	Injection for nerve block	0211	3.32	$164.66	$74.78	$32.93
64530	T	Injection for nerve block	0211	3.32	$164.66	$74.78	$32.93
64550	A	Apply neurostimulator					
64553	T	Implant neuroelectrodes	0225	17.72	$878.84	$408.33	$175.77
64555	T	Implant neuroelectrodes	0225	17.72	$878.84	$408.33	$175.77
64560	T	Implant neuroelectrodes	0225	17.72	$878.84	$408.33	$175.77
64565	T	Implant neuroelectrodes	0225	17.72	$878.84	$408.33	$175.77
64573	T	Implant neuroelectrodes	0225	17.72	$878.84	$408.33	$175.77
64575	T	Implant neuroelectrodes	0225	17.72	$878.84	$408.33	$175.77
64577	T	Implant neuroelectrodes	0225	17.72	$878.84	$408.33	$175.77
64580	T	Implant neuroelectrodes	0225	17.72	$878.84	$408.33	$175.77
64585	T	Revise/remove neuroelectrode	0105	15.06	$746.92	$372.32	$149.38
64590	T	Implant neuroreceiver	0222	124.43	$6,171.23	$2,955.13	$1,234.25

CPT codes and descriptions only are copyright American Medical Association. All Rights Reserved. Applicable FARS/DFARS Apply.
Copyright American Dental Association. All rights reserved.
*Code is new in 2001.

ADDENDUM B.—HOSPITAL OUTPATIENT DEPARTMENT (HOPD) PAYMENT STATUS BY HCPCS CODE AND RELATED INFORMATION—Continued

CPT/ HCPCS	HOPD Status Indicator	Description	APC	Relative Weight	Payment Rate	National Unadjusted Coinsurance	Minimum Unadjusted Coinsurance
64595	T	Revise/remove neuroreceiver	0105	15.06	$746.92	$372.32	$149.38
64600	T	Injection treatment of nerve	0211	3.32	$164.66	$74.78	$32.93
64605	T	Injection treatment of nerve	0211	3.32	$164.66	$74.78	$32.93
64610	T	Injection treatment of nerve	0211	3.32	$164.66	$74.78	$32.93
64612	T	Destroy nerve, face muscle	0211	3.32	$164.66	$74.78	$32.93
64613	T	Destroy nerve, spine muscle	0211	3.32	$164.66	$74.78	$32.93
*64614	S	Desrtoy nerve, extrem musc	0971	1.55	$76.88		$15.38
64620	T	Injection treatment of nerve	0211	3.32	$164.66	$74.78	$32.93
64622	T	Destr paravertebrl nerve l/s	0211	3.32	$164.66	$74.78	$32.93
64623	T	Destr paravertebral n add-on	0211	3.32	$164.66	$74.78	$32.93
64626	T	Destr paravertebrl nerve c/t	0211	3.32	$164.66	$74.78	$32.93
64627	T	Destr paravertebral n add-on	0211	3.32	$164.66	$74.78	$32.93
64630	T	Injection treatment of nerve	0211	3.32	$164.66	$74.78	$32.93
64640	T	Injection treatment of nerve	0211	3.32	$164.66	$74.78	$32.93
64680	T	Injection treatment of nerve	0211	3.32	$164.66	$74.78	$32.93
64702	T	Revise finger/toe nerve	0220	13.96	$692.36	$326.21	$138.47
64704	T	Revise hand/foot nerve	0220	13.96	$692.36	$326.21	$138.47
64708	T	Revise arm/leg nerve	0220	13.96	$692.36	$326.21	$138.47
64712	T	Revision of sciatic nerve	0220	13.96	$692.36	$326.21	$138.47
64713	T	Revision of arm nerve(s)	0220	13.96	$692.36	$326.21	$138.47
64714	T	Revise low back nerve(s)	0220	13.96	$692.36	$326.21	$138.47
64716	T	Revision of cranial nerve	0220	13.96	$692.36	$326.21	$138.47
64718	T	Revise ulnar nerve at elbow	0220	13.96	$692.36	$326.21	$138.47
64719	T	Revise ulnar nerve at wrist	0220	13.96	$692.36	$326.21	$138.47
64721	T	Carpal tunnel surgery	0220	13.96	$692.36	$326.21	$138.47
64722	T	Relieve pressure on nerve(s)	0220	13.96	$692.36	$326.21	$138.47
64726	T	Release foot/toe nerve	0220	13.96	$692.36	$326.21	$138.47
64727	T	Internal nerve revision	0220	13.96	$692.36	$326.21	$138.47
64732	T	Incision of brow nerve	0220	13.96	$692.36	$326.21	$138.47
64734	T	Incision of cheek nerve	0220	13.96	$692.36	$326.21	$138.47
64736	T	Incision of chin nerve	0220	13.96	$692.36	$326.21	$138.47
64738	T	Incision of jaw nerve	0220	13.96	$692.36	$326.21	$138.47
64740	T	Incision of tongue nerve	0220	13.96	$692.36	$326.21	$138.47
64742	T	Incision of facial nerve	0220	13.96	$692.36	$326.21	$138.47
64744	T	Incise nerve, back of head	0220	13.96	$692.36	$326.21	$138.47
64746	T	Incise diaphragm nerve	0220	13.96	$692.36	$326.21	$138.47
64752	C	Incision of vagus nerve					
64755	C	Incision of stomach nerves					
64760	C	Incision of vagus nerve					
64761	T	Incision of pelvis nerve	0220	13.96	$692.36	$326.21	$138.47
64763	C	Incise hip/thigh nerve					
64766	C	Incise hip/thigh nerve					
64771	T	Sever cranial nerve	0220	13.96	$692.36	$326.21	$138.47
64772	T	Incision of spinal nerve	0220	13.96	$692.36	$326.21	$138.47
64774	T	Remove skin nerve lesion	0220	13.96	$692.36	$326.21	$138.47
64776	T	Remove digit nerve lesion	0220	13.96	$692.36	$326.21	$138.47
64778	T	Digit nerve surgery add-on	0220	13.96	$692.36	$326.21	$138.47
64782	T	Remove limb nerve lesion	0220	13.96	$692.36	$326.21	$138.47
64783	T	Limb nerve surgery add-on	0220	13.96	$692.36	$326.21	$138.47
64784	T	Remove nerve lesion	0220	13.96	$692.36	$326.21	$138.47
64786	T	Remove sciatic nerve lesion	0221	18.36	$910.58	$463.62	$182.12
64787	T	Implant nerve end	0220	13.96	$692.36	$326.21	$138.47
64788	T	Remove skin nerve lesion	0220	13.96	$692.36	$326.21	$138.47
64790	T	Removal of nerve lesion	0220	13.96	$692.36	$326.21	$138.47
64792	T	Removal of nerve lesion	0221	18.36	$910.58	$463.62	$182.12
64795	T	Biopsy of nerve	0220	13.96	$692.36	$326.21	$138.47
64802	C	Remove sympathetic nerves					
64804	C	Remove sympathetic nerves					
64809	C	Remove sympathetic nerves					
64818	C	Remove sympathetic nerves					
64820	C	Remove sympathetic nerves					
64831	T	Repair of digit nerve	0221	18.36	$910.58	$463.62	$182.12
64832	T	Repair nerve add-on	0221	18.36	$910.58	$463.62	$182.12
64834	T	Repair of hand or foot nerve	0221	18.36	$910.58	$463.62	$182.12
64835	T	Repair of hand or foot nerve	0221	18.36	$910.58	$463.62	$182.12
64836	T	Repair of hand or foot nerve	0221	18.36	$910.58	$463.62	$182.12
64837	T	Repair nerve add-on	0221	18.36	$910.58	$463.62	$182.12
64840	T	Repair of leg nerve	0221	18.36	$910.58	$463.62	$182.12
64856	T	Repair/transpose nerve	0221	18.36	$910.58	$463.62	$182.12
64857	T	Repair arm/leg nerve	0221	18.36	$910.58	$463.62	$182.12
64858	T	Repair sciatic nerve	0221	18.36	$910.58	$463.62	$182.12
64859	T	Nerve surgery	0221	18.36	$910.58	$463.62	$182.12
64861	T	Repair of arm nerves	0221	18.36	$910.58	$463.62	$182.12
64862	T	Repair of low back nerves	0221	18.36	$910.58	$463.62	$182.12

CPT codes and descriptions only are copyright American Medical Association. All Rights Reserved. Applicable FARS/DFARS Apply.
Copyright American Dental Association. All rights reserved.
*Code is new in 2001.

ADDENDUM B.—HOSPITAL OUTPATIENT DEPARTMENT (HOPD) PAYMENT STATUS BY HCPCS CODE AND RELATED INFORMATION—Continued

CPT/ HCPCS	HOPD Status Indicator	Description	APC	Relative Weight	Payment Rate	National Unadjusted Coinsurance	Minimum Unadjusted Coinsurance
64864	T	Repair of facial nerve	0221	18.36	$910.58	$463.62	$182.12
64865	T	Repair of facial nerve	0221	18.36	$910.58	$463.62	$182.12
64866	C	Fusion of facial/other nerve					
64868	C	Fusion of facial/other nerve					
64870	T	Fusion of facial/other nerve	0221	18.36	$910.58	$463.62	$182.12
64872	T	Subsequent repair of nerve	0221	18.36	$910.58	$463.62	$182.12
64874	T	Repair & revise nerve add-on	0221	18.36	$910.58	$463.62	$182.12
64876	T	Repair nerve/shorten bone	0221	18.36	$910.58	$463.62	$182.12
64885	T	Nerve graft, head or neck	0221	18.36	$910.58	$463.62	$182.12
64886	T	Nerve graft, head or neck	0221	18.36	$910.58	$463.62	$182.12
64890	T	Nerve graft, hand or foot	0221	18.36	$910.58	$463.62	$182.12
64891	T	Nerve graft, hand or foot	0221	18.36	$910.58	$463.62	$182.12
64892	T	Nerve graft, arm or leg	0221	18.36	$910.58	$463.62	$182.12
64893	T	Nerve graft, arm or leg	0221	18.36	$910.58	$463.62	$182.12
64895	T	Nerve graft, hand or foot	0221	18.36	$910.58	$463.62	$182.12
64896	T	Nerve graft, hand or foot	0221	18.36	$910.58	$463.62	$182.12
64897	T	Nerve graft, arm or leg	0221	18.36	$910.58	$463.62	$182.12
64898	T	Nerve graft, arm or leg	0221	18.36	$910.58	$463.62	$182.12
64901	T	Nerve graft add-on	0221	18.36	$910.58	$463.62	$182.12
64902	T	Nerve graft add-on	0221	18.36	$910.58	$463.62	$182.12
64905	T	Nerve pedicle transfer	0221	18.36	$910.58	$463.62	$182.12
64907	T	Nerve pedicle transfer	0221	18.36	$910.58	$463.62	$182.12
64999	T	Nervous system surgery	0211	3.32	$164.66	$74.78	$32.93
65091	T	Revise eye	0242	23.70	$1,175.42	$597.36	$235.08
65093	T	Revise eye with implant	0241	16.60	$823.30	$384.47	$164.66
65101	T	Removal of eye	0242	23.70	$1,175.42	$597.36	$235.08
65103	T	Remove eye/insert implant	0242	23.70	$1,175.42	$597.36	$235.08
65105	T	Remove eye/attach implant	0242	23.70	$1,175.42	$597.36	$235.08
65110	T	Removal of eye	0242	23.70	$1,175.42	$597.36	$235.08
65112	T	Remove eye/revise socket	0242	23.70	$1,175.42	$597.36	$235.08
65114	T	Remove eye/revise socket	0242	23.70	$1,175.42	$597.36	$235.08
65125	T	Revise ocular implant	0240	13.47	$668.06	$315.31	$133.61
65130	T	Insert ocular implant	0241	16.60	$823.30	$384.47	$164.66
65135	T	Insert ocular implant	0241	16.60	$823.30	$384.47	$164.66
65140	T	Attach ocular implant	0242	23.70	$1,175.42	$597.36	$235.08
65150	T	Revise ocular implant	0241	16.60	$823.30	$384.47	$164.66
65155	T	Reinsert ocular implant	0242	23.70	$1,175.42	$597.36	$235.08
65175	T	Removal of ocular implant	0240	13.47	$668.06	$315.31	$133.61
65205	S	Remove foreign body from eye	0231	2.64	$130.94	$59.87	$26.19
65210	S	Remove foreign body from eye	0231	2.64	$130.94	$59.87	$26.19
65220	S	Remove foreign body from eye	0231	2.64	$130.94	$59.87	$26.19
65222	S	Remove foreign body from eye	0231	2.64	$130.94	$59.87	$26.19
65235	T	Remove foreign body from eye	0232	6.04	$299.56	$134.66	$59.91
65260	T	Remove foreign body from eye	0237	33.96	$1,684.28	$852.68	$336.86
65265	T	Remove foreign body from eye	0237	33.96	$1,684.28	$852.68	$336.86
65270	T	Repair of eye wound	0240	13.47	$668.06	$315.31	$133.61
65272	T	Repair of eye wound	0232	6.04	$299.56	$134.66	$59.91
65273	C	Repair of eye wound					
65275	T	Repair of eye wound	0233	13.79	$683.93	$331.60	$136.79
65280	T	Repair of eye wound	0233	13.79	$683.93	$331.60	$136.79
65285	T	Repair of eye wound	0234	20.64	$1,023.66	$502.16	$204.73
65286	T	Repair of eye wound	0232	6.04	$299.56	$134.66	$59.91
65290	T	Repair of eye socket wound	0243	17.99	$892.23	$431.39	$178.45
65400	T	Removal of eye lesion	0232	6.04	$299.56	$134.66	$59.91
65410	T	Biopsy of cornea	0233	13.79	$683.93	$331.60	$136.79
65420	T	Removal of eye lesion	0233	13.79	$683.93	$331.60	$136.79
65426	T	Removal of eye lesion	0233	13.79	$683.93	$331.60	$136.79
65430	S	Corneal smear	0231	2.64	$130.94	$59.87	$26.19
65435	T	Curette/treat cornea	0239	6.26	$310.47	$123.42	$62.09
65436	T	Curette/treat cornea	0232	6.04	$299.56	$134.66	$59.91
65450	T	Treatment of corneal lesion	0232	6.04	$299.56	$134.66	$59.91
65600	T	Revision of cornea	0240	13.47	$668.06	$315.31	$133.61
65710	T	Corneal transplant	0244	32.88	$1,630.72	$851.42	$326.14
65730	T	Corneal transplant	0244	32.88	$1,630.72	$851.42	$326.14
65750	T	Corneal transplant	0244	32.88	$1,630.72	$851.42	$326.14
65755	T	Corneal transplant	0244	32.88	$1,630.72	$851.42	$326.14
65760	E	Revision of cornea					
65765	E	Revision of cornea					
65767	E	Corneal tissue transplant					
65770	T	Revise cornea with implant	0244	32.88	$1,630.72	$851.42	$326.14
65771	E	Radial keratotomy					
65772	T	Correction of astigmatism	0232	6.04	$299.56	$134.66	$59.91
65775	T	Correction of astigmatism	0233	13.79	$683.93	$331.60	$136.79
65800	T	Drainage of eye	0232	6.04	$299.56	$134.66	$59.91

CPT codes and descriptions only are copyright American Medical Association. All Rights Reserved. Applicable FARS/DFARS Apply.
Copyright American Dental Association. All rights reserved.
*Code is new in 2001.

ADDENDUM B.—HOSPITAL OUTPATIENT DEPARTMENT (HOPD) PAYMENT STATUS BY HCPCS CODE AND RELATED INFORMATION—Continued

CPT/ HCPCS	HOPD Status Indicator	Description	APC	Relative Weight	Payment Rate	National Unadjusted Coinsurance	Minimum Unadjusted Coinsurance
65805	T	Drainage of eye	0233	13.79	$683.93	$331.60	$136.79
65810	T	Drainage of eye	0233	13.79	$683.93	$331.60	$136.79
65815	T	Drainage of eye	0233	13.79	$683.93	$331.60	$136.79
65820	T	Relieve inner eye pressure	0232	6.04	$299.56	$134.66	$59.91
65850	T	Incision of eye	0234	20.64	$1,023.66	$502.16	$204.73
65855	T	Laser surgery of eye	0247	4.89	$242.52	$112.86	$48.50
65860	T	Incise inner eye adhesions	0247	4.89	$242.52	$112.86	$48.50
65865	T	Incise inner eye adhesions	0233	13.79	$683.93	$331.60	$136.79
65870	T	Incise inner eye adhesions	0233	13.79	$683.93	$331.60	$136.79
65875	T	Incise inner eye adhesions	0233	13.79	$683.93	$331.60	$136.79
65880	T	Incise inner eye adhesions	0232	6.04	$299.56	$134.66	$59.91
65900	T	Remove eye lesion	0232	6.04	$299.56	$134.66	$59.91
65920	T	Remove implant from eye	0233	13.79	$683.93	$331.60	$136.79
65930	T	Remove blood clot from eye	0233	13.79	$683.93	$331.60	$136.79
66020	T	Injection treatment of eye	0232	6.04	$299.56	$134.66	$59.91
66030	T	Injection treatment of eye	0232	6.04	$299.56	$134.66	$59.91
66130	T	Remove eye lesion	0233	13.79	$683.93	$331.60	$136.79
66150	T	Glaucoma surgery	0233	13.79	$683.93	$331.60	$136.79
66155	T	Glaucoma surgery	0234	20.64	$1,023.66	$502.16	$204.73
66160	T	Glaucoma surgery	0234	20.64	$1,023.66	$502.16	$204.73
66165	T	Glaucoma surgery	0234	20.64	$1,023.66	$502.16	$204.73
66170	T	Glaucoma surgery	0234	20.64	$1,023.66	$502.16	$204.73
66172	T	Incision of eye	0234	20.64	$1,023.66	$502.16	$204.73
66180	T	Implant eye shunt	0234	20.64	$1,023.66	$502.16	$204.73
66185	T	Revise eye shunt	0234	20.64	$1,023.66	$502.16	$204.73
66220	T	Repair eye lesion	0236	6.70	$332.29	$147.96	$66.46
66225	T	Repair/graft eye lesion	0234	20.64	$1,023.66	$502.16	$204.73
66250	T	Follow-up surgery of eye	0233	13.79	$683.93	$331.60	$136.79
66500	T	Incision of iris	0232	6.04	$299.56	$134.66	$59.91
66505	T	Incision of iris	0232	6.04	$299.56	$134.66	$59.91
66600	T	Remove iris and lesion	0233	13.79	$683.93	$331.60	$136.79
66605	T	Removal of iris	0233	13.79	$683.93	$331.60	$136.79
66625	T	Removal of iris	0232	6.04	$299.56	$134.66	$59.91
66630	T	Removal of iris	0233	13.79	$683.93	$331.60	$136.79
66635	T	Removal of iris	0233	13.79	$683.93	$331.60	$136.79
66680	T	Repair iris & ciliary body	0233	13.79	$683.93	$331.60	$136.79
66682	T	Repair iris & ciliary body	0233	13.79	$683.93	$331.60	$136.79
66700	T	Destruction, ciliary body	0232	6.04	$299.56	$134.66	$59.91
66710	T	Destruction, ciliary body	0232	6.04	$299.56	$134.66	$59.91
66720	T	Destruction, ciliary body	0232	6.04	$299.56	$134.66	$59.91
66740	T	Destruction, ciliary body	0233	13.79	$683.93	$331.60	$136.79
66761	T	Revision of iris	0247	4.89	$242.52	$112.86	$48.50
66762	T	Revision of iris	0247	4.89	$242.52	$112.86	$48.50
66770	T	Removal of inner eye lesion	0247	4.89	$242.52	$112.86	$48.50
66820	T	Incision, secondary cataract	0232	6.04	$299.56	$134.66	$59.91
66821	T	After cataract laser surgery	0247	4.89	$242.52	$112.86	$48.50
66825	T	Reposition intraocular lens	0233	13.79	$683.93	$331.60	$136.79
66830	T	Removal of lens lesion	0232	6.04	$299.56	$134.66	$59.91
66840	T	Removal of lens material	0245	26.55	$1,316.77	$623.85	$263.35
66850	T	Removal of lens material	0245	26.55	$1,316.77	$623.85	$263.35
66852	T	Removal of lens material	0245	26.55	$1,316.77	$623.85	$263.35
66920	T	Extraction of lens	0245	26.55	$1,316.77	$623.85	$263.35
66930	T	Extraction of lens	0245	26.55	$1,316.77	$623.85	$263.35
66940	T	Extraction of lens	0245	26.55	$1,316.77	$623.85	$263.35
*66982	T	Cataract surgery, complex	0246	26.55	$1,316.77	$623.85	$263.35
66983	T	Remove cataract/insert lens	0246	26.55	$1,316.77	$623.85	$263.35
66984	T	Remove cataract/insert lens	0246	26.55	$1,316.77	$623.85	$263.35
66985	T	Insert lens prosthesis	0246	26.55	$1,316.77	$623.85	$263.35
66986	T	Exchange lens prosthesis	0246	26.55	$1,316.77	$623.85	$263.35
66999	T	Eye surgery procedure	0247	4.89	$242.52	$112.86	$48.50
67005	T	Partial removal of eye fluid	0237	33.96	$1,684.28	$852.68	$336.86
67010	T	Partial removal of eye fluid	0237	33.96	$1,684.28	$852.68	$336.86
67015	T	Release of eye fluid	0237	33.96	$1,684.28	$852.68	$336.86
67025	T	Replace eye fluid	0237	33.96	$1,684.28	$852.68	$336.86
67027	T	Implant eye drug system	0237	33.96	$1,684.28	$852.68	$336.86
67028	T	Injection eye drug	0236	6.70	$332.29	$147.96	$66.46
67030	T	Incise inner eye strands	0236	6.70	$332.29	$147.96	$66.46
67031	T	Laser surgery, eye strands	0247	4.89	$242.52	$112.86	$48.50
67036	T	Removal of inner eye fluid	0237	33.96	$1,684.28	$852.68	$336.86
67038	T	Strip retinal membrane	0237	33.96	$1,684.28	$852.68	$336.86
67039	T	Laser treatment of retina	0237	33.96	$1,684.28	$852.68	$336.86
67040	T	Laser treatment of retina	0237	33.96	$1,684.28	$852.68	$336.86
67101	T	Repair detached retina	0236	6.70	$332.29	$147.96	$66.46
67105	T	Repair detached retina	0248	4.19	$207.81	$94.05	$41.56

CPT codes and descriptions only are copyright American Medical Association. All Rights Reserved. Applicable FARS/DFARS Apply.
Copyright American Dental Association. All rights reserved.
*Code is new in 2001.

ADDENDUM B.—HOSPITAL OUTPATIENT DEPARTMENT (HOPD) PAYMENT STATUS BY HCPCS CODE AND RELATED INFORMATION—Continued

CPT/ HCPCS	HOPD Status Indicator	Description	APC	Relative Weight	Payment Rate	National Unadjusted Coinsurance	Minimum Unadjusted Coinsurance
67107	T	Repair detached retina	0237	33.96	$1,684.28	$852.68	$336.86
67108	T	Repair detached retina	0237	33.96	$1,684.28	$852.68	$336.86
67110	T	Repair detached retina	0236	6.70	$332.29	$147.96	$66.46
67112	T	Rerepair detached retina	0237	33.96	$1,684.28	$852.68	$336.86
67115	T	Release encircling material	0236	6.70	$332.29	$147.96	$66.46
67120	T	Remove eye implant material	0236	6.70	$332.29	$147.96	$66.46
67121	T	Remove eye implant material	0237	33.96	$1,684.28	$852.68	$336.86
67141	T	Treatment of retina	0235	2.94	$145.81	$78.91	$29.16
67145	T	Treatment of retina	0248	4.19	$207.81	$94.05	$41.56
67208	T	Treatment of retinal lesion	0235	2.94	$145.81	$78.91	$29.16
67210	T	Treatment of retinal lesion	0248	4.19	$207.81	$94.05	$41.56
67218	T	Treatment of retinal lesion	0237	33.96	$1,684.28	$852.68	$336.86
67220	T	Treatment of choroid lesion	0237	33.96	$1,684.28	$852.68	$336.86
*67221	T	Treatment of choroid lesion	0235	2.94	$145.81	$78.91	$29.16
67227	T	Treatment of retinal lesion	0235	2.94	$145.81	$78.91	$29.16
67228	T	Treatment of retinal lesion	0248	4.19	$207.81	$94.05	$41.56
67250	T	Reinforce eye wall	0240	13.47	$668.06	$315.31	$133.61
67255	T	Reinforce/graft eye wall	0237	33.96	$1,684.28	$852.68	$336.86
67299	T	Eye surgery procedure	0248	4.19	$207.81	$94.05	$41.56
67311	T	Revise eye muscle	0243	17.99	$892.23	$431.39	$178.45
67312	T	Revise two eye muscles	0243	17.99	$892.23	$431.39	$178.45
67314	T	Revise eye muscle	0243	17.99	$892.23	$431.39	$178.45
67316	T	Revise two eye muscles	0243	17.99	$892.23	$431.39	$178.45
67318	T	Revise eye muscle(s)	0243	17.99	$892.23	$431.39	$178.45
67320	T	Revise eye muscle(s) add-on	0243	17.99	$892.23	$431.39	$178.45
67331	T	Eye surgery follow-up add-on	0243	17.99	$892.23	$431.39	$178.45
67332	T	Rerevise eye muscles add-on	0243	17.99	$892.23	$431.39	$178.45
67334	T	Revise eye muscle w/suture	0243	17.99	$892.23	$431.39	$178.45
67335	T	Eye suture during surgery	0243	17.99	$892.23	$431.39	$178.45
67340	T	Revise eye muscle add-on	0243	17.99	$892.23	$431.39	$178.45
67343	T	Release eye tissue	0243	17.99	$892.23	$431.39	$178.45
67345	T	Destroy nerve of eye muscle	0238	2.80	$138.87	$58.96	$27.77
67350	S	Biopsy eye muscle	0231	2.64	$130.94	$59.87	$26.19
67399	T	Eye muscle surgery procedure	0243	17.99	$892.23	$431.39	$178.45
67400	T	Explore/biopsy eye socket	0241	16.60	$823.30	$384.47	$164.66
67405	T	Explore/drain eye socket	0241	16.60	$823.30	$384.47	$164.66
67412	T	Explore/treat eye socket	0241	16.60	$823.30	$384.47	$164.66
67413	T	Explore/treat eye socket	0241	16.60	$823.30	$384.47	$164.66
67414	T	Explr/decompress eye socket	0242	23.70	$1,175.42	$597.36	$235.08
67415	T	Aspiration, orbital contents	0239	6.26	$310.47	$123.42	$62.09
67420	T	Explore/treat eye socket	0242	23.70	$1,175.42	$597.36	$235.08
67430	T	Explore/treat eye socket	0242	23.70	$1,175.42	$597.36	$235.08
67440	T	Explore/drain eye socket	0242	23.70	$1,175.42	$597.36	$235.08
67445	T	Explr/decompress eye socket	0242	23.70	$1,175.42	$597.36	$235.08
67450	T	Explore/biopsy eye socket	0242	23.70	$1,175.42	$597.36	$235.08
67500	S	Inject/treat eye socket	0231	2.64	$130.94	$59.87	$26.19
67505	T	Inject/treat eye socket	0238	2.80	$138.87	$58.96	$27.77
67515	T	Inject/treat eye socket	0239	6.26	$310.47	$123.42	$62.09
67550	T	Insert eye socket implant	0242	23.70	$1,175.42	$597.36	$235.08
67560	T	Revise eye socket implant	0241	16.60	$823.30	$384.47	$164.66
67570	T	Decompress optic nerve	0242	23.70	$1,175.42	$597.36	$235.08
67599	T	Orbit surgery procedure	0239	6.26	$310.47	$123.42	$62.09
67700	T	Drainage of eyelid abscess	0238	2.80	$138.87	$58.96	$27.77
67710	T	Incision of eyelid	0239	6.26	$310.47	$123.42	$62.09
67715	T	Incision of eyelid fold	0240	13.47	$668.06	$315.31	$133.61
67800	T	Remove eyelid lesion	0238	2.80	$138.87	$58.96	$27.77
67801	T	Remove eyelid lesions	0239	6.26	$310.47	$123.42	$62.09
67805	T	Remove eyelid lesions	0238	2.80	$138.87	$58.96	$27.77
67808	T	Remove eyelid lesion(s)	0240	13.47	$668.06	$315.31	$133.61
67810	T	Biopsy of eyelid	0238	2.80	$138.87	$58.96	$27.77
67820	T	Revise eyelashes	0238	2.80	$138.87	$58.96	$27.77
67825	T	Revise eyelashes	0238	2.80	$138.87	$58.96	$27.77
67830	T	Revise eyelashes	0239	6.26	$310.47	$123.42	$62.09
67835	T	Revise eyelashes	0240	13.47	$668.06	$315.31	$133.61
67840	T	Remove eyelid lesion	0239	6.26	$310.47	$123.42	$62.09
67850	T	Treat eyelid lesion	0239	6.26	$310.47	$123.42	$62.09
67875	T	Closure of eyelid by suture	0239	6.26	$310.47	$123.42	$62.09
67880	T	Revision of eyelid	0232	6.04	$299.56	$134.66	$59.91
67882	T	Revision of eyelid	0240	13.47	$668.06	$315.31	$133.61
67900	T	Repair brow defect	0240	13.47	$668.06	$315.31	$133.61
67901	T	Repair eyelid defect	0240	13.47	$668.06	$315.31	$133.61
67902	T	Repair eyelid defect	0240	13.47	$668.06	$315.31	$133.61
67903	T	Repair eyelid defect	0240	13.47	$668.06	$315.31	$133.61
67904	T	Repair eyelid defect	0240	13.47	$668.06	$315.31	$133.61

CPT codes and descriptions only are copyright American Medical Association. All Rights Reserved. Applicable FARS/DFARS Apply.
Copyright American Dental Association. All rights reserved.
*Code is new in 2001.

ADDENDUM B.—HOSPITAL OUTPATIENT DEPARTMENT (HOPD) PAYMENT STATUS BY HCPCS CODE AND RELATED INFORMATION—Continued

CPT/ HCPCS	HOPD Status Indicator	Description	APC	Relative Weight	Payment Rate	National Unadjusted Coinsurance	Minimum Unadjusted Coinsurance
67906	T	Repair eyelid defect	0240	13.47	$668.06	$315.31	$133.61
67908	T	Repair eyelid defect	0240	13.47	$668.06	$315.31	$133.61
67909	T	Revise eyelid defect	0240	13.47	$668.06	$315.31	$133.61
67911	T	Revise eyelid defect	0240	13.47	$668.06	$315.31	$133.61
67914	T	Repair eyelid defect	0240	13.47	$668.06	$315.31	$133.61
67915	T	Repair eyelid defect	0239	6.26	$310.47	$123.42	$62.09
67916	T	Repair eyelid defect	0240	13.47	$668.06	$315.31	$133.61
67917	T	Repair eyelid defect	0240	13.47	$668.06	$315.31	$133.61
67921	T	Repair eyelid defect	0240	13.47	$668.06	$315.31	$133.61
67922	T	Repair eyelid defect	0239	6.26	$310.47	$123.42	$62.09
67923	T	Repair eyelid defect	0240	13.47	$668.06	$315.31	$133.61
67924	T	Repair eyelid defect	0240	13.47	$668.06	$315.31	$133.61
67930	T	Repair eyelid wound	0240	13.47	$668.06	$315.31	$133.61
67935	T	Repair eyelid wound	0240	13.47	$668.06	$315.31	$133.61
67938	T	Remove eyelid foreign body	0238	2.80	$138.87	$58.96	$27.77
67950	T	Revision of eyelid	0240	13.47	$668.06	$315.31	$133.61
67961	T	Revision of eyelid	0240	13.47	$668.06	$315.31	$133.61
67966	T	Revision of eyelid	0240	13.47	$668.06	$315.31	$133.61
67971	T	Reconstruction of eyelid	0241	16.60	$823.30	$384.47	$164.66
67973	T	Reconstruction of eyelid	0241	16.60	$823.30	$384.47	$164.66
67974	T	Reconstruction of eyelid	0241	16.60	$823.30	$384.47	$164.66
67975	T	Reconstruction of eyelid	0240	13.47	$668.06	$315.31	$133.61
67999	T	Revision of eyelid	0240	13.47	$668.06	$315.31	$133.61
68020	T	Incise/drain eyelid lining	0240	13.47	$668.06	$315.31	$133.61
68040	T	Treatment of eyelid lesions	0239	6.26	$310.47	$123.42	$62.09
68100	T	Biopsy of eyelid lining	0232	6.04	$299.56	$134.66	$59.91
68110	S	Remove eyelid lining lesion	0231	2.64	$130.94	$59.87	$26.19
68115	T	Remove eyelid lining lesion	0239	6.26	$310.47	$123.42	$62.09
68130	T	Remove eyelid lining lesion	0233	13.79	$683.93	$331.60	$136.79
68135	T	Remove eyelid lining lesion	0239	6.26	$310.47	$123.42	$62.09
68200	S	Treat eyelid by injection	0230	0.98	$48.61	$22.48	$9.72
68320	T	Revise/graft eyelid lining	0240	13.47	$668.06	$315.31	$133.61
68325	T	Revise/graft eyelid lining	0242	23.70	$1,175.42	$597.36	$235.08
68326	T	Revise/graft eyelid lining	0241	16.60	$823.30	$384.47	$164.66
68328	T	Revise/graft eyelid lining	0241	16.60	$823.30	$384.47	$164.66
68330	T	Revise eyelid lining	0233	13.79	$683.93	$331.60	$136.79
68335	T	Revise/graft eyelid lining	0241	16.60	$823.30	$384.47	$164.66
68340	T	Separate eyelid adhesions	0240	13.47	$668.06	$315.31	$133.61
68360	T	Revise eyelid lining	0234	20.64	$1,023.66	$502.16	$204.73
68362	T	Revise eyelid lining	0234	20.64	$1,023.66	$502.16	$204.73
68399	T	Eyelid lining surgery	0239	6.26	$310.47	$123.42	$62.09
68400	T	Incise/drain tear gland	0238	2.80	$138.87	$58.96	$27.77
68420	T	Incise/drain tear sac	0240	13.47	$668.06	$315.31	$133.61
68440	T	Incise tear duct opening	0238	2.80	$138.87	$58.96	$27.77
68500	T	Removal of tear gland	0241	16.60	$823.30	$384.47	$164.66
68505	T	Partial removal, tear gland	0241	16.60	$823.30	$384.47	$164.66
68510	T	Biopsy of tear gland	0240	13.47	$668.06	$315.31	$133.61
68520	T	Removal of tear sac	0241	16.60	$823.30	$384.47	$164.66
68525	T	Biopsy of tear sac	0240	13.47	$668.06	$315.31	$133.61
68530	T	Clearance of tear duct	0240	13.47	$668.06	$315.31	$133.61
68540	T	Remove tear gland lesion	0241	16.60	$823.30	$384.47	$164.66
68550	T	Remove tear gland lesion	0242	23.70	$1,175.42	$597.36	$235.08
68700	T	Repair tear ducts	0241	16.60	$823.30	$384.47	$164.66
68705	T	Revise tear duct opening	0238	2.80	$138.87	$58.96	$27.77
68720	T	Create tear sac drain	0242	23.70	$1,175.42	$597.36	$235.08
68745	T	Create tear duct drain	0241	16.60	$823.30	$384.47	$164.66
68750	T	Create tear duct drain	0242	23.70	$1,175.42	$597.36	$235.08
68760	T	Close tear duct opening	0238	2.80	$138.87	$58.96	$27.77
68761	S	Close tear duct opening	0231	2.64	$130.94	$59.87	$26.19
68770	T	Close tear system fistula	0240	13.47	$668.06	$315.31	$133.61
68801	S	Dilate tear duct opening	0231	2.64	$130.94	$59.87	$26.19
68810	S	Probe nasolacrimal duct	0231	2.64	$130.94	$59.87	$26.19
68811	T	Probe nasolacrimal duct	0240	13.47	$668.06	$315.31	$133.61
68815	T	Probe nasolacrimal duct	0240	13.47	$668.06	$315.31	$133.61
68840	S	Explore/irrigate tear ducts	0231	2.64	$130.94	$59.87	$26.19
68850	N	Injection for tear sac x-ray					
68899	S	Tear duct system surgery	0231	2.64	$130.94	$59.87	$26.19
69000	T	Drain external ear lesion	0006	2.00	$99.19	$33.95	$19.84
69005	T	Drain external ear lesion	0007	3.68	$182.51	$72.03	$36.50
69020	T	Drain outer ear canal lesion	0006	2.00	$99.19	$33.95	$19.84
69090	E	Pierce earlobes					
69100	T	Biopsy of external ear	0019	4.00	$198.39	$78.91	$39.68
69105	T	Biopsy of external ear canal	0253	12.02	$596.14	$284.00	$119.23
69110	T	Remove external ear, partial	0020	6.51	$322.87	$130.53	$64.57

CPT codes and descriptions only are copyright American Medical Association. All Rights Reserved. Applicable FARS/DFARS Apply.
Copyright American Dental Association. All rights reserved.
*Code is new in 2001.

ADDENDUM B.—HOSPITAL OUTPATIENT DEPARTMENT (HOPD) PAYMENT STATUS BY HCPCS CODE AND RELATED INFORMATION—Continued

CPT/ HCPCS	HOPD Status Indicator	Description	APC	Relative Weight	Payment Rate	National Unadjusted Coinsurance	Minimum Unadjusted Coinsurance
69120	T	Removal of external ear	0253	12.02	$596.14	$284.00	$119.23
69140	T	Remove ear canal lesion(s)	0254	12.45	$617.47	$272.41	$123.49
69145	T	Remove ear canal lesion(s)	0020	6.51	$322.87	$130.53	$64.57
69150	C	Extensive ear canal surgery					
69155	C	Extensive ear/neck surgery					
69200	X	Clear outer ear canal	0340	1.04	$51.58	$12.85	$10.32
69205	T	Clear outer ear canal	0022	12.49	$619.45	$292.94	$123.89
69210	X	Remove impacted ear wax	0340	1.04	$51.58	$12.85	$10.32
69220	T	Clean out mastoid cavity	0012	0.53	$26.29	$9.18	$5.26
69222	T	Clean out mastoid cavity	0253	12.02	$596.14	$284.00	$119.23
69300	T	Revise external ear	0254	12.45	$617.47	$272.41	$123.49
69310	T	Rebuild outer ear canal	0256	25.40	$1,259.74	$623.05	$251.95
69320	T	Rebuild outer ear canal	0256	25.40	$1,259.74	$623.05	$251.95
69399	T	Outer ear surgery procedure	0252	5.18	$256.90	$114.24	$51.38
69400	T	Inflate middle ear canal	0251	1.68	$83.32	$27.99	$16.66
69401	N	Inflate middle ear canal					
69405	T	Catheterize middle ear canal	0252	5.18	$256.90	$114.24	$51.38
69410	T	Inset middle ear (baffle)	0252	5.18	$256.90	$114.24	$51.38
69420	T	Incision of eardrum	0252	5.18	$256.90	$114.24	$51.38
69421	T	Incision of eardrum	0253	12.02	$596.14	$284.00	$119.23
69424	T	Remove ventilating tube	0252	5.18	$256.90	$114.24	$51.38
69433	T	Create eardrum opening	0252	5.18	$256.90	$114.24	$51.38
69436	T	Create eardrum opening	0253	12.02	$596.14	$284.00	$119.23
69440	T	Exploration of middle ear	0253	12.02	$596.14	$284.00	$119.23
69450	T	Eardrum revision	0256	25.40	$1,259.74	$623.05	$251.95
69501	T	Mastoidectomy	0256	25.40	$1,259.74	$623.05	$251.95
69502	C	Mastoidectomy					
69505	T	Remove mastoid structures	0256	25.40	$1,259.74	$623.05	$251.95
69511	T	Extensive mastoid surgery	0256	25.40	$1,259.74	$623.05	$251.95
69530	T	Extensive mastoid surgery	0256	25.40	$1,259.74	$623.05	$251.95
69535	C	Remove part of temporal bone					
69540	T	Remove ear lesion	0253	12.02	$596.14	$284.00	$119.23
69550	T	Remove ear lesion	0256	25.40	$1,259.74	$623.05	$251.95
69552	T	Remove ear lesion	0256	25.40	$1,259.74	$623.05	$251.95
69554	C	Remove ear lesion					
69601	T	Mastoid surgery revision	0256	25.40	$1,259.74	$623.05	$251.95
69602	T	Mastoid surgery revision	0256	25.40	$1,259.74	$623.05	$251.95
69603	T	Mastoid surgery revision	0256	25.40	$1,259.74	$623.05	$251.95
69604	T	Mastoid surgery revision	0256	25.40	$1,259.74	$623.05	$251.95
69605	T	Mastoid surgery revision	0256	25.40	$1,259.74	$623.05	$251.95
69610	T	Repair of eardrum	0253	12.02	$596.14	$284.00	$119.23
69620	T	Repair of eardrum	0253	12.02	$596.14	$284.00	$119.23
69631	T	Repair eardrum structures	0256	25.40	$1,259.74	$623.05	$251.95
69632	T	Rebuild eardrum structures	0256	25.40	$1,259.74	$623.05	$251.95
69633	T	Rebuild eardrum structures	0256	25.40	$1,259.74	$623.05	$251.95
69635	T	Repair eardrum structures	0256	25.40	$1,259.74	$623.05	$251.95
69636	T	Rebuild eardrum structures	0256	25.40	$1,259.74	$623.05	$251.95
69637	T	Rebuild eardrum structures	0256	25.40	$1,259.74	$623.05	$251.95
69641	T	Revise middle ear & mastoid	0256	25.40	$1,259.74	$623.05	$251.95
69642	T	Revise middle ear & mastoid	0256	25.40	$1,259.74	$623.05	$251.95
69643	T	Revise middle ear & mastoid	0256	25.40	$1,259.74	$623.05	$251.95
69644	T	Revise middle ear & mastoid	0256	25.40	$1,259.74	$623.05	$251.95
69645	T	Revise middle ear & mastoid	0256	25.40	$1,259.74	$623.05	$251.95
69646	T	Revise middle ear & mastoid	0256	25.40	$1,259.74	$623.05	$251.95
69650	T	Release middle ear bone	0254	12.45	$617.47	$272.41	$123.49
69660	T	Revise middle ear bone	0256	25.40	$1,259.74	$623.05	$251.95
69661	T	Revise middle ear bone	0256	25.40	$1,259.74	$623.05	$251.95
69662	T	Revise middle ear bone	0256	25.40	$1,259.74	$623.05	$251.95
69666	T	Repair middle ear structures	0256	25.40	$1,259.74	$623.05	$251.95
69667	T	Repair middle ear structures	0256	25.40	$1,259.74	$623.05	$251.95
69670	T	Remove mastoid air cells	0256	25.40	$1,259.74	$623.05	$251.95
69676	T	Remove middle ear nerve	0256	25.40	$1,259.74	$623.05	$251.95
69700	T	Close mastoid fistula	0256	25.40	$1,259.74	$623.05	$251.95
69710	E	Implant/replace hearing aid					
69711	T	Remove/repair hearing aid	0256	25.40	$1,259.74	$623.05	$251.95
*69714	T	Implant temple bone w/stimul	0256	25.40	$1,259.74	$623.05	$251.95
*69715	T	Temple bne implnt w/stimulat	0256	25.40	$1,259.74	$623.05	$251.95
*69717	T	Temple bone implant revision	0256	25.40	$1,259.74	$623.05	$251.95
*69718	T	Revise temple bone implant	0256	25.40	$1,259.74	$623.05	$251.95
69720	T	Release facial nerve	0256	25.40	$1,259.74	$623.05	$251.95
69725	T	Release facial nerve	0256	25.40	$1,259.74	$623.05	$251.95
69740	T	Repair facial nerve	0256	25.40	$1,259.74	$623.05	$251.95
69745	T	Repair facial nerve	0256	25.40	$1,259.74	$623.05	$251.95
69799	T	Middle ear surgery procedure	0253	12.02	$596.14	$284.00	$119.23

CPT codes and descriptions only are copyright American Medical Association. All Rights Reserved. Applicable FARS/DFARS Apply.
Copyright American Dental Association. All rights reserved.
*Code is new in 2001.

ADDENDUM B.—HOSPITAL OUTPATIENT DEPARTMENT (HOPD) PAYMENT STATUS BY HCPCS CODE AND RELATED INFORMATION—Continued

CPT/ HCPCS	HOPD Status Indicator	Description	APC	Relative Weight	Payment Rate	National Unadjusted Coinsurance	Minimum Unadjusted Coinsurance
69801	T	Incise inner ear	0256	25.40	$1,259.74	$623.05	$251.95
69802	T	Incise inner ear	0256	25.40	$1,259.74	$623.05	$251.95
69805	T	Explore inner ear	0256	25.40	$1,259.74	$623.05	$251.95
69806	T	Explore inner ear	0256	25.40	$1,259.74	$623.05	$251.95
69820	T	Establish inner ear window	0256	25.40	$1,259.74	$623.05	$251.95
69840	T	Revise inner ear window	0256	25.40	$1,259.74	$623.05	$251.95
69905	T	Remove inner ear	0256	25.40	$1,259.74	$623.05	$251.95
69910	T	Remove inner ear & mastoid	0256	25.40	$1,259.74	$623.05	$251.95
69915	T	Incise inner ear nerve	0256	25.40	$1,259.74	$623.05	$251.95
69930	T	Implant cochlear device	0256	25.40	$1,259.74	$623.05	$251.95
69949	T	Inner ear surgery procedure	0253	12.02	$596.14	$284.00	$119.23
69950	C	Incise inner ear nerve					
69955	T	Release facial nerve	0256	25.40	$1,259.74	$623.05	$251.95
69960	T	Release inner ear canal	0256	25.40	$1,259.74	$623.05	$251.95
69970	C	Remove inner ear lesion					
69979	T	Temporal bone surgery	0252	5.18	$256.90	$114.24	$51.38
69990	N	Microsurgery add-on					
70010	S	Contrast x-ray of brain	0274	4.83	$239.55	$128.12	$47.91
70015	S	Contrast x-ray of brain	0274	4.83	$239.55	$128.12	$47.91
70030	X	X-ray eye for foreign body	0260	0.79	$39.18	$22.02	$7.84
70100	X	X-ray exam of jaw	0260	0.79	$39.18	$22.02	$7.84
70110	X	X-ray exam of jaw	0260	0.79	$39.18	$22.02	$7.84
70120	X	X-ray exam of mastoids	0260	0.79	$39.18	$22.02	$7.84
70130	X	X-ray exam of mastoids	0260	0.79	$39.18	$22.02	$7.84
70134	X	X-ray exam of middle ear	0261	1.38	$68.44	$38.77	$13.69
70140	X	X-ray exam of facial bones	0260	0.79	$39.18	$22.02	$7.84
70150	X	X-ray exam of facial bones	0260	0.79	$39.18	$22.02	$7.84
70160	X	X-ray exam of nasal bones	0260	0.79	$39.18	$22.02	$7.84
70170	X	X-ray exam of tear duct	0263	1.68	$83.32	$45.88	$16.66
70190	X	X-ray exam of eye sockets	0260	0.79	$39.18	$22.02	$7.84
70200	X	X-ray exam of eye sockets	0260	0.79	$39.18	$22.02	$7.84
70210	X	X-ray exam of sinuses	0260	0.79	$39.18	$22.02	$7.84
70220	X	X-ray exam of sinuses	0260	0.79	$39.18	$22.02	$7.84
70240	X	X-ray exam, pituitary saddle	0260	0.79	$39.18	$22.02	$7.84
70250	X	X-ray exam of skull	0260	0.79	$39.18	$22.02	$7.84
70260	X	X-ray exam of skull	0261	1.38	$68.44	$38.77	$13.69
70300	X	X-ray exam of teeth	0262	0.40	$19.83	$10.90	$3.97
70310	X	X-ray exam of teeth	0262	0.40	$19.83	$10.90	$3.97
70320	X	Full mouth x-ray of teeth	0262	0.40	$19.83	$10.90	$3.97
70328	X	X-ray exam of jaw joint	0260	0.79	$39.18	$22.02	$7.84
70330	X	X-ray exam of jaw joints	0260	0.79	$39.18	$22.02	$7.84
70332	S	X-ray exam of jaw joint	0275	2.74	$135.89	$72.26	$27.18
70336	S	Magnetic image, jaw joint	0284	8.02	$397.76	$257.39	$79.55
70350	X	X-ray head for orthodontia	0260	0.79	$39.18	$22.02	$7.84
70355	X	Panoramic x-ray of jaws	0260	0.79	$39.18	$22.02	$7.84
70360	X	X-ray exam of neck	0260	0.79	$39.18	$22.02	$7.84
70370	X	Throat x-ray & fluoroscopy	0273	2.49	$123.49	$61.02	$24.70
70371	X	Speech evaluation, complex	0272	1.40	$69.43	$39.00	$13.89
70373	X	Contrast x-ray of larynx	0263	1.68	$83.32	$45.88	$16.66
70380	X	X-ray exam of salivary gland	0260	0.79	$39.18	$22.02	$7.84
70390	X	X-ray exam of salivary duct	0263	1.68	$83.32	$45.88	$16.66
70450	S	CAT scan of head or brain	0283	4.89	$242.52	$179.39	$48.50
70460	S	Contrast CAT scan of head	0283	4.89	$242.52	$179.39	$48.50
70470	S	Contrast CAT scans of head	0283	4.89	$242.52	$179.39	$48.50
70480	S	CAT scan of skull	0283	4.89	$242.52	$179.39	$48.50
70481	S	Contrast CAT scan of skull	0283	4.89	$242.52	$179.39	$48.50
70482	S	Contrast CAT scans of skull	0283	4.89	$242.52	$179.39	$48.50
70486	S	Cat scan of face/jaw	0282	2.38	$118.04	$94.51	$23.61
70487	S	Contrast CAT scan, face/jaw	0283	4.89	$242.52	$179.39	$48.50
70488	S	Contrast cat scans, face/jaw	0283	4.89	$242.52	$179.39	$48.50
70490	S	CAT scan of neck tissue	0283	4.89	$242.52	$179.39	$48.50
70491	S	Contrast CAT of neck tissue	0283	4.89	$242.52	$179.39	$48.50
70492	S	Contrast CAT of neck tissue	0283	4.89	$242.52	$179.39	$48.50
*70496	S	Ct angiography, head	0283	4.89	$242.52	$179.39	$48.50
*70498	S	Ct angiography, neck	0283	4.89	$242.52	$179.39	$48.50
70540	S	Magnetic image, face/neck	0284	8.02	$397.76	$257.39	$79.55
70541D	S	MR angiography	0284	8.02	$397.76	$257.39	$79.55
*70542	S	MR (eg, proton) imaging	0284	8.02	$397.76	$257.39	$79.55
*70543	S	MR (eg, proton) imaging	0284	8.02	$397.76	$257.39	$79.55
*70544	S	MR angiography	0284	8.02	$397.76	$257.39	$79.55
*70545	S	MR angiography	0284	8.02	$397.76	$257.39	$79.55
*70546	S	MR angiography	0284	8.02	$397.76	$257.39	$79.55
*70547	S	MR angiography	0284	8.02	$397.76	$257.39	$79.55
*70548	S	MR angiography	0284	8.02	$397.76	$257.39	$79.55

CPT codes and descriptions only are copyright American Medical Association. All Rights Reserved. Applicable FARS/DFARS Apply.
Copyright American Dental Association. All rights reserved.
*Code is new in 2001.

ADDENDUM B.—HOSPITAL OUTPATIENT DEPARTMENT (HOPD) PAYMENT STATUS BY HCPCS CODE AND RELATED INFORMATION—Continued

CPT/ HCPCS	HOPD Status Indicator	Description	APC	Relative Weight	Payment Rate	National Unadjusted Coinsurance	Minimum Unadjusted Coinsurance
*70549	S	MR angiography	0284	8.02	$397.76	$257.39	$79.55
70551	S	Magnetic image, brain (MRI)	0284	8.02	$397.76	$257.39	$79.55
70552	S	Magnetic image, brain (MRI)	0284	8.02	$397.76	$257.39	$79.55
70553	S	Magnetic image, brain (mri)	0284	8.02	$397.76	$257.39	$79.55
71010	X	Chest x-ray	0260	0.79	$39.18	$22.02	$7.84
71015	X	Chest x-ray	0260	0.79	$39.18	$22.02	$7.84
71020	X	Chest x-ray	0260	0.79	$39.18	$22.02	$7.84
71021	X	Chest x-ray	0260	0.79	$39.18	$22.02	$7.84
71022	X	Chest x-ray	0260	0.79	$39.18	$22.02	$7.84
71023	X	Chest x-ray and fluoroscopy	0272	1.40	$69.43	$39.00	$13.89
71030	X	Chest x-ray	0260	0.79	$39.18	$22.02	$7.84
71034	X	Chest x-ray and fluoroscopy	0272	1.40	$69.43	$39.00	$13.89
71035	X	Chest x-ray	0260	0.79	$39.18	$22.02	$7.84
71036D	X	X-ray guidance for biopsy	0273	2.49	$123.49	$61.02	$24.70
71040	X	Contrast x-ray of bronchi	0263	1.68	$83.32	$45.88	$16.66
71060	X	Contrast x-ray of bronchi	0263	1.68	$83.32	$45.88	$16.66
71090	X	X-ray & pacemaker insertion	0273	2.49	$123.49	$61.02	$24.70
71100	X	X-ray exam of ribs	0260	0.79	$39.18	$22.02	$7.84
71101	X	X-ray exam of ribs/chest	0260	0.79	$39.18	$22.02	$7.84
71110	X	X-ray exam of ribs	0260	0.79	$39.18	$22.02	$7.84
71111	X	X-ray exam of ribs/ chest	0261	1.38	$68.44	$38.77	$13.69
71120	X	X-ray exam of breastbone	0260	0.79	$39.18	$22.02	$7.84
71130	X	X-ray exam of breastbone	0260	0.79	$39.18	$22.02	$7.84
71250	S	Cat scan of chest	0283	4.89	$242.52	$179.39	$48.50
71260	S	Contrast CAT scan of chest	0283	4.89	$242.52	$179.39	$48.50
71270	S	Contrast CAT scans of chest	0283	4.89	$242.52	$179.39	$48.50
*71275	S	CT angiography, chest	0283	4.89	$242.52	$179.39	$48.50
71550	S	Magnetic image, chest (mri)	0284	8.02	$397.76	$257.39	$79.55
*71551	S	MRI chest w/ dye	0284	8.02	$397.76	$257.39	$79.55
*71552	S	MRI chest w/o dye	0284	8.02	$397.76	$257.39	$79.55
71555	S	Magnetic image, chest (mra)	0284	8.02	$397.76	$257.39	$79.55
72010	X	X-ray exam of spine	0261	1.38	$68.44	$38.77	$13.69
72020	X	X-ray exam of spine	0260	0.79	$39.18	$22.02	$7.84
72040	X	X-ray exam of neck spine	0260	0.79	$39.18	$22.02	$7.84
72050	X	X-ray exam of neck spine	0261	1.38	$68.44	$38.77	$13.69
72052	X	X-ray exam of neck spine	0261	1.38	$68.44	$38.77	$13.69
72069	X	X-ray exam of trunk spine	0260	0.79	$39.18	$22.02	$7.84
72070	X	X-ray exam of thoracic spine	0260	0.79	$39.18	$22.02	$7.84
72072	X	X-ray exam of thoracic spine	0260	0.79	$39.18	$22.02	$7.84
72074	X	X-ray exam of thoracic spine	0260	0.79	$39.18	$22.02	$7.84
72080	X	X-ray exam of trunk spine	0260	0.79	$39.18	$22.02	$7.84
72090	X	X-ray exam of trunk spine	0260	0.79	$39.18	$22.02	$7.84
72100	X	X-ray exam of lower spine	0260	0.79	$39.18	$22.02	$7.84
72110	X	X-ray exam of lower spine	0261	1.38	$68.44	$38.77	$13.69
72114	X	X-ray exam of lower spine	0261	1.38	$68.44	$38.77	$13.69
72120	X	X-ray exam of lower spine	0260	0.79	$39.18	$22.02	$7.84
72125	S	CAT scan of neck spine	0283	4.89	$242.52	$179.39	$48.50
72126	S	Contrast CAT scan of neck	0283	4.89	$242.52	$179.39	$48.50
72127	S	Contrast CAT scans of neck	0283	4.89	$242.52	$179.39	$48.50
72128	S	CAT scan of thorax spine	0283	4.89	$242.52	$179.39	$48.50
72129	S	Contrast CAT scan of thorax	0283	4.89	$242.52	$179.39	$48.50
72130	S	Contrast CAT scans of thorax	0283	4.89	$242.52	$179.39	$48.50
72131	S	CAT scan of lower spine	0283	4.89	$242.52	$179.39	$48.50
72132	S	Contrast CAT of lower spine	0283	4.89	$242.52	$179.39	$48.50
72133	S	Contrst cat scans, low spine	0283	4.89	$242.52	$179.39	$48.50
72141	S	Magnetic image, neck spine	0284	8.02	$397.76	$257.39	$79.55
72142	S	Magnetic image, neck spine	0284	8.02	$397.76	$257.39	$79.55
72146	S	Magnetic image, chest spine	0284	8.02	$397.76	$257.39	$79.55
72147	S	Magnetic image, chest spine	0284	8.02	$397.76	$257.39	$79.55
72148	S	Magnetic image, lumbar spine	0284	8.02	$397.76	$257.39	$79.55
72149	S	Magnetic image, lumbar spine	0284	8.02	$397.76	$257.39	$79.55
72156	S	Magnetic image, neck spine	0284	8.02	$397.76	$257.39	$79.55
72157	S	Magnetic image, chest spine	0284	8.02	$397.76	$257.39	$79.55
72158	S	Magnetic image, lumbar spine	0284	8.02	$397.76	$257.39	$79.55
72159	E	Magnetic image, spine (mra)					
72170	X	X-ray exam of pelvis	0260	0.79	$39.18	$22.02	$7.84
72190	X	X-ray exam of pelvis	0260	0.79	$39.18	$22.02	$7.84
*72191	S	CT angiograph pelv w/o & w/ dye	0283	4.89	$242.52	$179.39	$48.50
72192	S	CAT scan of pelvis	0283	4.89	$242.52	$179.39	$48.50
72193	S	Contrast CAT scan of pelvis	0283	4.89	$242.52	$179.39	$48.50
72194	S	Contrast CAT scans of pelvis	0283	4.89	$242.52	$179.39	$48.50
*72195	S	MRI pelvis w/o dye	0284	8.02	$397.76	$257.39	$79.55
72196	S	Magnetic image, pelvis	0284	8.02	$397.76	$257.39	$79.55
*72197	S	MRI pelvis w/o & w/ dye	0284	8.02	$397.76	$257.39	$79.55

CPT codes and descriptions only are copyright American Medical Association. All Rights Reserved. Applicable FARS/DFARS Apply.
Copyright American Dental Association. All rights reserved.
*Code is new in 2001.

ADDENDUM B.—HOSPITAL OUTPATIENT DEPARTMENT (HOPD) PAYMENT STATUS BY HCPCS CODE AND RELATED INFORMATION—Continued

CPT/ HCPCS	HOPD Status Indicator	Description	APC	Relative Weight	Payment Rate	National Unadjusted Coinsurance	Minimum Unadjusted Coinsurance
72198	E	Magnetic image, pelvis (mra)					
72200	X	X-ray exam sacroiliac joints	0260	0.79	$39.18	$22.02	$7.84
72202	X	X-ray exam sacroiliac joints	0260	0.79	$39.18	$22.02	$7.84
72220	X	X-ray exam of tailbone	0260	0.79	$39.18	$22.02	$7.84
72240	S	Contrast x-ray of neck spine	0274	4.83	$239.55	$128.12	$47.91
72255	S	Contrast x-ray, thorax spine	0274	4.83	$239.55	$128.12	$47.91
72265	S	Contrast x-ray, lower spine	0274	4.83	$239.55	$128.12	$47.91
72270	S	Contrast x-ray of spine	0274	4.83	$239.55	$128.12	$47.91
72275	S	Epidurography	0274	4.83	$239.55	$128.12	$47.91
72285	S	X-ray c/t spine disk	0274	4.83	$239.55	$128.12	$47.91
72295	S	X-ray of lower spine disk	0274	4.83	$239.55	$128.12	$47.91
73000	X	X-ray exam of collar bone	0260	0.79	$39.18	$22.02	$7.84
73010	X	X-ray exam of shoulder blade	0260	0.79	$39.18	$22.02	$7.84
73020	X	X-ray exam of shoulder	0260	0.79	$39.18	$22.02	$7.84
73030	X	X-ray exam of shoulder	0260	0.79	$39.18	$22.02	$7.84
73040	S	Contrast x-ray of shoulder	0275	2.74	$135.89	$72.26	$27.18
73050	X	X-ray exam of shoulders	0260	0.79	$39.18	$22.02	$7.84
73060	X	X-ray exam of humerus	0260	0.79	$39.18	$22.02	$7.84
73070	X	X-ray exam of elbow	0260	0.79	$39.18	$22.02	$7.84
73080	X	X-ray exam of elbow	0260	0.79	$39.18	$22.02	$7.84
73085	S	Contrast x-ray of elbow	0275	2.74	$135.89	$72.26	$27.18
73090	X	X-ray exam of forearm	0260	0.79	$39.18	$22.02	$7.84
73092	X	X-ray exam of arm, infant	0260	0.79	$39.18	$22.02	$7.84
73100	X	X-ray exam of wrist	0260	0.79	$39.18	$22.02	$7.84
73110	X	X-ray exam of wrist	0260	0.79	$39.18	$22.02	$7.84
73115	S	Contrast x-ray of wrist	0275	2.74	$135.89	$72.26	$27.18
73120	X	X-ray exam of hand	0260	0.79	$39.18	$22.02	$7.84
73130	X	X-ray exam of hand	0260	0.79	$39.18	$22.02	$7.84
73140	X	X-ray exam of finger(s)	0260	0.79	$39.18	$22.02	$7.84
73200	S	CAT scan of arm	0283	4.89	$242.52	$179.39	$48.50
73201	S	Contrast CAT scan of arm	0283	4.89	$242.52	$179.39	$48.50
73202	S	Contrast CAT scans of arm	0283	4.89	$242.52	$179.39	$48.50
*73206	S	CT angio upr extrm w/o & w/ dye	0283	4.89	$242.52	$179.39	$48.50
*73218	S	MRI upper extrm w/o dye	0284	8.02	$397.76	$257.39	$79.55
*73219	S	MRI upper extrm w/ dye	0284	8.02	$397.76	$257.39	$79.55
73220	S	Magnetic image, arm/hand	0284	8.02	$397.76	$257.39	$79.55
73221	S	Magnetic image, joint of arm	0284	8.02	$397.76	$257.39	$79.55
*73222	S	MRI joint upr extrm w/ dye	0284	8.02	$397.76	$257.39	$79.55
*73223	S	MRI joint upr extrm w/o & w/ dye	0284	8.02	$397.76	$257.39	$79.55
73225	E	Magnetic image, upper (mra)					
73500	X	X-ray exam of hip	0260	0.79	$39.18	$22.02	$7.84
73510	X	X-ray exam of hip	0260	0.79	$39.18	$22.02	$7.84
73520	X	X-ray exam of hips	0260	0.79	$39.18	$22.02	$7.84
73525	S	Contrast x-ray of hip	0275	2.74	$135.89	$72.26	$27.18
73530	X	X-ray exam of hip	0261	1.38	$68.44	$38.77	$13.69
73540	X	X-ray exam of pelvis & hips	0260	0.79	$39.18	$22.02	$7.84
73542	S	X-ray exam, sacroiliac joint	0275	2.74	$135.89	$72.26	$27.18
73550	X	X-ray exam of thigh	0260	0.79	$39.18	$22.02	$7.84
73560	X	X-ray exam of knee, 1 or 2	0260	0.79	$39.18	$22.02	$7.84
73562	X	X-ray exam of knee, 3	0260	0.79	$39.18	$22.02	$7.84
73564	X	X-ray exam, knee, 4 or more	0260	0.79	$39.18	$22.02	$7.84
73565	X	X-ray exam of knees	0260	0.79	$39.18	$22.02	$7.84
73580	S	Contrast x-ray of knee joint	0275	2.74	$135.89	$72.26	$27.18
73590	X	X-ray exam of lower leg	0260	0.79	$39.18	$22.02	$7.84
73592	X	X-ray exam of leg, infant	0261	1.38	$68.44	$38.77	$13.69
73600	X	X-ray exam of ankle	0260	0.79	$39.18	$22.02	$7.84
73610	X	X-ray exam of ankle	0260	0.79	$39.18	$22.02	$7.84
73615	S	Contrast x-ray of ankle	0275	2.74	$135.89	$72.26	$27.18
73620	X	X-ray exam of foot	0260	0.79	$39.18	$22.02	$7.84
73630	X	X-ray exam of foot	0260	0.79	$39.18	$22.02	$7.84
73650	X	X-ray exam of heel	0260	0.79	$39.18	$22.02	$7.84
73660	X	X-ray exam of toe(s)	0260	0.79	$39.18	$22.02	$7.84
73700	S	CAT scan of leg	0283	4.89	$242.52	$179.39	$48.50
73701	S	Contrast CAT scan of leg	0283	4.89	$242.52	$179.39	$48.50
73702	S	Contrast CAT scans of leg	0283	4.89	$242.52	$179.39	$48.50
*73706	S	CT angio lwr extr w/o & w/ dye	0283	4.89	$242.52	$179.39	$48.50
*73718	S	MRI lower extrem w/o dye	0284	8.02	$397.76	$257.39	$79.55
*73719	S	MRI lower extrem w/ dye	0284	8.02	$397.76	$257.39	$79.55
73720	S	Magnetic image, leg/foot	0284	8.02	$397.76	$257.39	$79.55
73721	S	Magnetic image, joint of leg	0284	8.02	$397.76	$257.39	$79.55
*73722	S	MRI joint lwr extrm w/ dye	0284	8.02	$397.76	$257.39	$79.55
*73723	S	MRI joint lwr extrm w/o & w/ dye	0284	8.02	$397.76	$257.39	$79.55
73725	S	Magnetic image/lower (mra)	0284	8.02	$397.76	$257.39	$79.55
74000	X	X-ray exam of abdomen	0260	0.79	$39.18	$22.02	$7.84

CPT codes and descriptions only are copyright American Medical Association. All Rights Reserved. Applicable FARS/DFARS Apply.
Copyright American Dental Association. All rights reserved.
*Code is new in 2001.

ADDENDUM B.—HOSPITAL OUTPATIENT DEPARTMENT (HOPD) PAYMENT STATUS BY HCPCS CODE AND RELATED INFORMATION—Continued

CPT/ HCPCS	HOPD Status Indicator	Description	APC	Relative Weight	Payment Rate	National Unadjusted Coinsurance	Minimum Unadjusted Coinsurance
74010	X	X-ray exam of abdomen	0260	0.79	$39.18	$22.02	$7.84
74020	X	X-ray exam of abdomen	0260	0.79	$39.18	$22.02	$7.84
74022	X	X-ray exam series, abdomen	0261	1.38	$68.44	$38.77	$13.69
74150	S	CAT scan of abdomen	0283	4.89	$242.52	$179.39	$48.50
74160	S	Contrast CAT scan of abdomen	0283	4.89	$242.52	$179.39	$48.50
74170	S	Contrast CAT scans, abdomen	0283	4.89	$242.52	$179.39	$48.50
*74175	S	CT angio abdom w/o & w/ dye	0283	4.89	$242.52	$179.39	$48.50
74181	S	Magnetic image/abdomen (mri)	0284	8.02	$397.76	$257.39	$79.55
*74182	S	MRI abdomen w/ dye	0284	8.02	$397.76	$257.39	$79.55
*74183	S	MRI abdomen w/o & w/ dye	0284	8.02	$397.76	$257.39	$79.55
74185	S	Magnetic image/abdomen (MRA)	0284	8.02	$397.76	$257.39	$79.55
74190	X	X-ray exam of peritoneum	0263	1.68	$83.32	$45.88	$16.66
74210	S	Contrst x-ray exam of throat	0276	1.79	$88.78	$49.78	$17.76
74220	S	Contrast x-ray, esophagus	0276	1.79	$88.78	$49.78	$17.76
74230	S	Cinema x-ray, throat/esoph	0276	1.79	$88.78	$49.78	$17.76
74235	S	Remove esophagus obstruction	0296	3.57	$177.06	$100.25	$35.41
74240	S	X-ray exam, upper gi tract	0276	1.79	$88.78	$49.78	$17.76
74241	S	X-ray exam, upper gi tract	0276	1.79	$88.78	$49.78	$17.76
74245	S	X-ray exam, upper gi tract	0277	2.47	$122.50	$69.28	$24.50
74246	S	Contrst x-ray uppr gi tract	0276	1.79	$88.78	$49.78	$17.76
74247	S	Contrst x-ray uppr gi tract	0276	1.79	$88.78	$49.78	$17.76
74249	S	Contrst x-ray uppr gi tract	0277	2.47	$122.50	$69.28	$24.50
74250	S	X-ray exam of small bowel	0276	1.79	$88.78	$49.78	$17.76
74251	S	X-ray exam of small bowel	0277	2.47	$122.50	$69.28	$24.50
74260	S	X-ray exam of small bowel	0277	2.47	$122.50	$69.28	$24.50
74270	S	Contrast x-ray exam of colon	0276	1.79	$88.78	$49.78	$17.76
74280	S	Contrast x-ray exam of colon	0277	2.47	$122.50	$69.28	$24.50
74283	S	Contrast x-ray exam of colon	0276	1.79	$88.78	$49.78	$17.76
74290	S	Contrast x-ray, gallbladder	0276	1.79	$88.78	$49.78	$17.76
74291	S	Contrast x-rays, gallbladder	0276	1.79	$88.78	$49.78	$17.76
74300	X	X-ray bile ducts/pancreas	0263	1.68	$83.32	$45.88	$16.66
74301	X	X-rays at surgery add-on	0263	1.68	$83.32	$45.88	$16.66
74305	X	X-ray bile ducts/pancreas	0263	1.68	$83.32	$45.88	$16.66
74320	X	Contrast x-ray of bile ducts	0264	3.83	$189.96	$108.97	$37.99
74327	S	X-ray bile stone removal	0296	3.57	$177.06	$100.25	$35.41
74328	X	Xray bile duct endoscopy	0264	3.83	$189.96	$108.97	$37.99
74329	X	X-ray for pancreas endoscopy	0264	3.83	$189.96	$108.97	$37.99
74330	X	X-ray bile/panc endoscopy	0264	3.83	$189.96	$108.97	$37.99
74340	X	X-ray guide for GI tube	0272	1.40	$69.43	$39.00	$13.89
74350	X	X-ray guide, stomach tube	0264	3.83	$189.96	$108.97	$37.99
74355	X	X-ray guide, intestinal tube	0264	3.83	$189.96	$108.97	$37.99
74360	S	X-ray guide, GI dilation	0296	3.57	$177.06	$100.25	$35.41
74363	S	X-ray, bile duct dilation	0297	6.13	$304.03	$172.51	$60.81
74400	S	Contrst x-ray, urinary tract	0278	2.85	$141.35	$81.67	$28.27
74410	S	Contrst x-ray, urinary tract	0278	2.85	$141.35	$81.67	$28.27
74415	S	Contrst x-ray, urinary tract	0278	2.85	$141.35	$81.67	$28.27
74420	S	Contrst x-ray, urinary tract	0278	2.85	$141.35	$81.67	$28.27
74425	S	Contrst x-ray, urinary tract	0278	2.85	$141.35	$81.67	$28.27
74430	S	Contrast x-ray, bladder	0278	2.85	$141.35	$81.67	$28.27
74440	S	X-ray, male genital tract	0278	2.85	$141.35	$81.67	$28.27
74445	S	X-ray exam of penis	0278	2.85	$141.35	$81.67	$28.27
74450	S	X-ray, urethra/bladder	0278	2.85	$141.35	$81.67	$28.27
74455	S	X-ray, urethra/bladder	0278	2.85	$141.35	$81.67	$28.27
74470	X	X-ray exam of kidney lesion	0264	3.83	$189.96	$108.97	$37.99
74475	S	X-ray control, cath insert	0297	6.13	$304.03	$172.51	$60.81
74480	S	X-ray control, cath insert	0297	6.13	$304.03	$172.51	$60.81
74485	S	X-ray guide, GU dilation	0296	3.57	$177.06	$100.25	$35.41
74710	X	X-ray measurement of pelvis	0260	0.79	$39.18	$22.02	$7.84
74740	X	X-ray, female genital tract	0264	3.83	$189.96	$108.97	$37.99
74742	X	X-ray, fallopian tube	0264	3.83	$189.96	$108.97	$37.99
74775	S	X-ray exam of perineum	0278	2.85	$141.35	$81.67	$28.27
75552	S	Magnetic image, myocardium	0284	8.02	$397.76	$257.39	$79.55
75553	S	Magnetic image, myocardium	0284	8.02	$397.76	$257.39	$79.55
75554	S	Cardiac MRI/function	0284	8.02	$397.76	$257.39	$79.55
75555	S	Cardiac MRI/limited study	0284	8.02	$397.76	$257.39	$79.55
75556	E	Cardiac MRI/flow mapping					
75600	S	Contrast x-ray exam of aorta	0280	14.98	$742.95	$380.12	$148.59
75605	S	Contrast x-ray exam of aorta	0280	14.98	$742.95	$380.12	$148.59
75625	S	Contrast x-ray exam of aorta	0280	14.98	$742.95	$380.12	$148.59
75630	S	X-ray aorta, leg arteries	0280	14.98	$742.95	$380.12	$148.59
*75635	S	CT angio abdominal arteries	0283	4.89	$242.52	$179.39	$48.50
75650	S	Artery x-rays, head & neck	0280	14.98	$742.95	$380.12	$148.59
75658	S	Artery x-rays, arm	0280	14.98	$742.95	$380.12	$148.59
75660	S	Artery x-rays, head & neck	0279	6.30	$312.46	$174.57	$62.49

CPT codes and descriptions only are copyright American Medical Association. All Rights Reserved. Applicable FARS/DFARS Apply.
Copyright American Dental Association. All rights reserved.
*Code is new in 2001.

ADDENDUM B.—HOSPITAL OUTPATIENT DEPARTMENT (HOPD) PAYMENT STATUS BY HCPCS CODE AND RELATED INFORMATION—Continued

CPT/ HCPCS	HOPD Status Indicator	Description	APC	Relative Weight	Payment Rate	National Unadjusted Coinsurance	Minimum Unadjusted Coinsurance
75662	S	Artery x-rays, head & neck	0279	6.30	$312.46	$174.57	$62.49
75665	S	Artery x-rays, head & neck	0280	14.98	$742.95	$380.12	$148.59
75671	S	Artery x-rays, head & neck	0280	14.98	$742.95	$380.12	$148.59
75676	S	Artery x-rays, neck	0280	14.98	$742.95	$380.12	$148.59
75680	S	Artery x-rays, neck	0280	14.98	$742.95	$380.12	$148.59
75685	S	Artery x-rays, spine	0279	6.30	$312.46	$174.57	$62.49
75705	S	Artery x-rays, spine	0279	6.30	$312.46	$174.57	$62.49
75710	S	Artery x-rays, arm/leg	0280	14.98	$742.95	$380.12	$148.59
75716	S	Artery x-rays, arms/legs	0280	14.98	$742.95	$380.12	$148.59
75722	S	Artery x-rays, kidney	0280	14.98	$742.95	$380.12	$148.59
75724	S	Artery x-rays, kidneys	0280	14.98	$742.95	$380.12	$148.59
75726	S	Artery x-rays, abdomen	0280	14.98	$742.95	$380.12	$148.59
75731	S	Artery x-rays, adrenal gland	0280	14.98	$742.95	$380.12	$148.59
75733	S	Artery x-rays, adrenals	0280	14.98	$742.95	$380.12	$148.59
75736	S	Artery x-rays, pelvis	0280	14.98	$742.95	$380.12	$148.59
75741	S	Artery x-rays, lung	0279	6.30	$312.46	$174.57	$62.49
75743	S	Artery x-rays, lungs	0280	14.98	$742.95	$380.12	$148.59
75746	S	Artery x-rays, lung	0279	6.30	$312.46	$174.57	$62.49
75756	S	Artery x-rays, chest	0279	6.30	$312.46	$174.57	$62.49
75774	S	Artery x-ray, each vessel	0280	14.98	$742.95	$380.12	$148.59
75790	S	Visualize A-V shunt	0281	4.40	$218.22	$115.16	$43.64
75801	X	Lymph vessel x-ray, arm/leg	0264	3.83	$189.96	$108.97	$37.99
75803	X	Lymph vessel x-ray,arms/legs	0264	3.83	$189.96	$108.97	$37.99
75805	X	Lymph vessel x-ray, trunk	0264	3.83	$189.96	$108.97	$37.99
75807	X	Lymph vessel x-ray, trunk	0264	3.83	$189.96	$108.97	$37.99
75809	X	Nonvascular shunt, x-ray	0264	3.83	$189.96	$108.97	$37.99
75810	S	Vein x-ray, spleen/liver	0279	6.30	$312.46	$174.57	$62.49
75820	S	Vein x-ray, arm/leg	0281	4.40	$218.22	$115.16	$43.64
75822	S	Vein x-ray, arms/legs	0281	4.40	$218.22	$115.16	$43.64
75825	S	Vein x-ray, trunk	0279	6.30	$312.46	$174.57	$62.49
75827	S	Vein x-ray, chest	0279	6.30	$312.46	$174.57	$62.49
75831	S	Vein x-ray, kidney	0279	6.30	$312.46	$174.57	$62.49
75833	S	Vein x-ray, kidneys	0279	6.30	$312.46	$174.57	$62.49
75840	S	Vein x-ray, adrenal gland	0279	6.30	$312.46	$174.57	$62.49
75842	S	Vein x-ray, adrenal glands	0279	6.30	$312.46	$174.57	$62.49
75860	S	Vein x-ray, neck	0279	6.30	$312.46	$174.57	$62.49
75870	S	Vein x-ray, skull	0279	6.30	$312.46	$174.57	$62.49
75872	S	Vein x-ray, skull	0279	6.30	$312.46	$174.57	$62.49
75880	S	Vein x-ray, eye socket	0279	6.30	$312.46	$174.57	$62.49
75885	S	Vein x-ray, liver	0279	6.30	$312.46	$174.57	$62.49
75887	S	Vein x-ray, liver	0280	14.98	$742.95	$380.12	$148.59
75889	S	Vein x-ray, liver	0279	6.30	$312.46	$174.57	$62.49
75891	S	Vein x-ray, liver	0279	6.30	$312.46	$174.57	$62.49
75893	N	Venous sampling by catheter					
75894	S	X-rays, transcath therapy	0297	6.13	$304.03	$172.51	$60.81
75896	S	X-rays, transcath therapy	0297	6.13	$304.03	$172.51	$60.81
75898	X	Follow-up angiogram	0264	3.83	$189.96	$108.97	$37.99
75900	C	Arterial catheter exchange					
75940	X	X-ray placement, vein filter	0264	3.83	$189.96	$108.97	$37.99
75945	S	Intravascular us	0267	2.72	$134.90	$80.06	$26.98
75946	S	Intravascular us add-on	0267	2.72	$134.90	$80.06	$26.98
*75952	C	Abdom aneurysm endovas repr					
*75953	C	Abdom aneurysm endovas repr					
75960	S	Transcatheter intro, stent	0279	6.30	$312.46	$174.57	$62.49
75961	S	Retrieval, broken catheter	0279	6.30	$312.46	$174.57	$62.49
75962	S	Repair arterial blockage	0280	14.98	$742.95	$380.12	$148.59
75964	S	Repair artery blockage, each	0279	6.30	$312.46	$174.57	$62.49
75966	S	Repair arterial blockage	0280	14.98	$742.95	$380.12	$148.59
75968	S	Repair artery blockage, each	0279	6.30	$312.46	$174.57	$62.49
75970	S	Vascular biopsy	0279	6.30	$312.46	$174.57	$62.49
75978	S	Repair venous blockage	0279	6.30	$312.46	$174.57	$62.49
75980	S	Contrast xray exam bile duct	0297	6.13	$304.03	$172.51	$60.81
75982	S	Contrast xray exam bile duct	0297	6.13	$304.03	$172.51	$60.81
75984	S	Xray control catheter change	0296	3.57	$177.06	$100.25	$35.41
75989	X	Abscess drainage under x-ray	0273	2.49	$123.49	$61.02	$24.70
75992	S	Atherectomy, x-ray exam	0279	6.30	$312.46	$174.57	$62.49
75993	T	Atherectomy, x-ray exam	0081	28.81	$1,428.86	$710.91	$285.77
75994	T	Atherectomy, x-ray exam	0081	28.81	$1,428.86	$710.91	$285.77
75995	S	Atherectomy, x-ray exam	0279	6.30	$312.46	$174.57	$62.49
75996	T	Atherectomy, x-ray exam	0081	28.81	$1,428.86	$710.91	$285.77
76000	X	Fluoroscope examination	0272	1.40	$69.43	$39.00	$13.89
76001	X	Fluoroscope exam, extensive	0273	2.49	$123.49	$61.02	$24.70
76003	X	Needle localization by x-ray	0272	1.40	$69.43	$39.00	$13.89
76005	X	Fluoroguide for spine inject	0273	2.49	$123.49	$61.02	$24.70

CPT codes and descriptions only are copyright American Medical Association. All Rights Reserved. Applicable FARS/DFARS Apply.
Copyright American Dental Association. All rights reserved.
*Code is new in 2001.

ADDENDUM B.—HOSPITAL OUTPATIENT DEPARTMENT (HOPD) PAYMENT STATUS BY HCPCS CODE AND RELATED INFORMATION—Continued

CPT/ HCPCS	HOPD Status Indicator	Description	APC	Relative Weight	Payment Rate	National Unadjusted Coinsurance	Minimum Unadjusted Coinsurance
76006	X	X-ray stress view	0261	1.38	$68.44	$38.77	$13.69
76010	X	X-ray, nose to rectum	0260	0.79	$39.18	$22.02	$7.84
*76012	S	Percut vertebroplasty fluor	0274	4.83	$239.55	$128.12	$47.91
*76013	S	Percut vertebroplasty CT	0274	4.83	$239.55	$128.12	$47.91
76020	X	X-rays for bone age	0261	1.38	$68.44	$38.77	$13.69
76040	X	X-rays, bone evaluation	0260	0.79	$39.18	$22.02	$7.84
76061	X	X-rays, bone survey	0261	1.38	$68.44	$38.77	$13.69
76062	X	X-rays, bone survey	0261	1.38	$68.44	$38.77	$13.69
76065	X	X-rays, bone evaluation	0261	1.38	$68.44	$38.77	$13.69
76066	X	Joint(s) survey, single film	0260	0.79	$39.18	$22.02	$7.84
76070	E	CT scan, bone density study					
76075	S	Dual energy x-ray study	0971	1.55	$76.88		$15.38
76076	T	Dual energy x-ray study	0970	0.52	$25.79		$5.16
76078	X	Photodensitometry	0261	1.38	$68.44	$38.77	$13.69
76080	X	X-ray exam of fistula	0263	1.68	$83.32	$45.88	$16.66
76086	X	X-ray of mammary duct	0263	1.68	$83.32	$45.88	$16.66
76088	X	X-ray of mammary ducts	0263	1.68	$83.32	$45.88	$16.66
76090	S	Mammogram, one breast	0271	0.70	$34.72	$19.50	$6.94
76091	S	Mammogram, both breasts	0271	0.70	$34.72	$19.50	$6.94
76092	A	Mammogram, screening					
76093	S	Magnetic image, breast	0284	8.02	$397.76	$257.39	$79.55
76094	S	Magnetic image, both breasts	0284	8.02	$397.76	$257.39	$79.55
76095	X	Stereotactic breast biopsy	0264	3.83	$189.96	$108.97	$37.99
76096	X	X-ray of needle wire, breast	0263	1.68	$83.32	$45.88	$16.66
76098	X	X-ray exam, breast specimen	0260	0.79	$39.18	$22.02	$7.84
76100	X	X-ray exam of body section	0261	1.38	$68.44	$38.77	$13.69
76101	X	Complex body section x-ray	0263	1.68	$83.32	$45.88	$16.66
76102	X	Complex body section x-rays	0264	3.83	$189.96	$108.97	$37.99
76120	X	Cinematic x-rays	0261	1.38	$68.44	$38.77	$13.69
76125	X	Cinematic x-rays add-on	0261	1.38	$68.44	$38.77	$13.69
76140	E	X-ray consultation					
76150	X	X-ray exam, dry process	0260	0.79	$39.18	$22.02	$7.84
76350	N	Special x-ray contrast study					
76355	S	CAT scan for localization	0283	4.89	$242.52	$179.39	$48.50
76360	S	CAT scan for needle biopsy	0283	4.89	$242.52	$179.39	$48.50
76365D	S	CAT scan for cyst aspiration	0283	4.89	$242.52	$179.39	$48.50
76370	S	CAT scan for therapy guide	0282	2.38	$118.04	$94.51	$23.61
76375	S	3d/holograph reconstr add-on	0282	2.38	$118.04	$94.51	$23.61
76380	S	CAT scan follow-up study	0282	2.38	$118.04	$94.51	$23.61
76390	S	Mr spectroscopy	0284	8.02	$397.76	$257.39	$79.55
*76393	X	MR guidance for needle place	0273	2.49	$123.49	$61.02	$24.70
76400	S	Magnetic image, bone marrow	0284	8.02	$397.76	$257.39	$79.55
76499	X	Radiographic procedure	0260	0.79	$39.18	$22.02	$7.84
76506	S	Echo exam of head	0266	1.79	$88.78	$57.35	$17.76
76511	S	Echo exam of eye	0266	1.79	$88.78	$57.35	$17.76
76512	S	Echo exam of eye	0266	1.79	$88.78	$57.35	$17.76
76513	S	Echo exam of eye, water bath	0265	1.17	$58.03	$38.08	$11.61
76516	S	Echo exam of eye	0266	1.79	$88.78	$57.35	$17.76
76519	S	Echo exam of eye	0266	1.79	$88.78	$57.35	$17.76
76529	S	Echo exam of eye	0265	1.17	$58.03	$38.08	$11.61
76536	S	Echo exam of head and neck	0265	1.17	$58.03	$38.08	$11.61
76604	S	Echo exam of chest	0266	1.79	$88.78	$57.35	$17.76
76645	S	Echo exam of breast(s)	0265	1.17	$58.03	$38.08	$11.61
76700	S	Echo exam of abdomen	0266	1.79	$88.78	$57.35	$17.76
76705	S	Echo exam of abdomen	0266	1.79	$88.78	$57.35	$17.76
76770	S	Echo exam abdomen back wall	0266	1.79	$88.78	$57.35	$17.76
76775	S	Echo exam abdomen back wall	0266	1.79	$88.78	$57.35	$17.76
76778	S	Echo exam kidney transplant	0266	1.79	$88.78	$57.35	$17.76
76800	S	Echo exam spinal canal	0266	1.79	$88.78	$57.35	$17.76
76805	S	Echo exam of pregnant uterus	0266	1.79	$88.78	$57.35	$17.76
76810	S	Echo exam of pregnant uterus	0265	1.17	$58.03	$38.08	$11.61
76815	S	Echo exam of pregnant uterus	0265	1.17	$58.03	$38.08	$11.61
76816	S	Echo exam follow-up/repeat	0265	1.17	$58.03	$38.08	$11.61
76818	S	Fetal biophysical profile	0266	1.79	$88.78	$57.35	$17.76
*76819	S	Fetl biophys profil w/o stress	0266	1.79	$88.78	$57.35	$17.76
76825	S	Echo exam of fetal heart	0269	4.40	$218.22	$114.01	$43.64
76826	S	Echo exam of fetal heart	0269	4.40	$218.22	$114.01	$43.64
76827	S	Echo exam of fetal heart	0269	4.40	$218.22	$114.01	$43.64
76828	S	Echo exam of fetal heart	0269	4.40	$218.22	$114.01	$43.64
76830	S	Echo exam, transvaginal	0266	1.79	$88.78	$57.35	$17.76
76831	S	Echo exam, uterus	0266	1.79	$88.78	$57.35	$17.76
76856	S	Echo exam of pelvis	0266	1.79	$88.78	$57.35	$17.76
76857	S	Echo exam of pelvis	0265	1.17	$58.03	$38.08	$11.61
76870	S	Echo exam of scrotum	0266	1.79	$88.78	$57.35	$17.76

CPT codes and descriptions only are copyright American Medical Association. All Rights Reserved. Applicable FARS/DFARS Apply.
Copyright American Dental Association. All rights reserved.
*Code is new in 2001.

ADDENDUM B.—HOSPITAL OUTPATIENT DEPARTMENT (HOPD) PAYMENT STATUS BY HCPCS CODE AND RELATED INFORMATION—Continued

CPT/ HCPCS	HOPD Status Indicator	Description	APC	Relative Weight	Payment Rate	National Unadjusted Coinsurance	Minimum Unadjusted Coinsurance
76872	S	Echo exam, transrectal	0266	1.79	$88.78	$57.35	$17.76
76873	S	Echograp trans r, pros study	0266	1.79	$88.78	$57.35	$17.76
76880	S	Echo exam of extremity	0266	1.79	$88.78	$57.35	$17.76
76885	S	Echo exam, infant hips	0266	1.79	$88.78	$57.35	$17.76
76886	S	Echo exam, infant hips	0266	1.79	$88.78	$57.35	$17.76
76930	X	Echo guide for heart sac tap	0268	2.23	$110.60	$69.51	$22.12
76932	X	Echo guide for heart biopsy	0268	2.23	$110.60	$69.51	$22.12
76934D	X	Echo guide for chest tap	0268	2.23	$110.60	$69.51	$22.12
76936	X	Echo guide for artery repair	0268	2.23	$110.60	$69.51	$22.12
76938D	X	Echo exam for drainage	0268	2.23	$110.60	$69.51	$22.12
76941	X	Echo guide for transfusion	0268	2.23	$110.60	$69.51	$22.12
76942	X	Echo guide for biopsy	0268	2.23	$110.60	$69.51	$22.12
76945	X	Echo guide, villus sampling	0268	2.23	$110.60	$69.51	$22.12
76946	X	Echo guide for amniocentesis	0268	2.23	$110.60	$69.51	$22.12
76948	X	Echo guide, ova aspiration	0268	2.23	$110.60	$69.51	$22.12
76950	X	Echo guidance radiotherapy	0268	2.23	$110.60	$69.51	$22.12
76960D	X	Echo guidance radiotherapy	0268	2.23	$110.60	$69.51	$22.12
76965	X	Echo guidance radiotherapy	0268	2.23	$110.60	$69.51	$22.12
76970	S	Ultrasound exam follow-up	0265	1.17	$58.03	$38.08	$11.61
76975	S	GI endoscopic ultrasound	0266	1.79	$88.78	$57.35	$17.76
76977	S	Us bone density measure	0265	1.17	$58.03	$38.08	$11.61
76986	S	Echo exam at surgery	0266	1.79	$88.78	$57.35	$17.76
76999	S	Echo examination procedure	0266	1.79	$88.78	$57.35	$17.76
77261	E	Radiation therapy planning					
77262	E	Radiation therapy planning					
77263	E	Radiation therapy planning					
77280	X	Set radiation therapy field	0304	1.49	$73.90	$41.52	$14.78
77285	X	Set radiation therapy field	0305	4.06	$201.36	$97.50	$40.27
77290	X	Set radiation therapy field	0305	4.06	$201.36	$97.50	$40.27
77295	X	Set radiation therapy field	0310	13.98	$693.35	$339.05	$138.67
77299	E	Radiation therapy planning					
77300	X	Radiation therapy dose plan	0304	1.49	$73.90	$41.52	$14.78
77305	X	Radiation therapy dose plan	0304	1.49	$73.90	$41.52	$14.78
77310	X	Radiation therapy dose plan	0304	1.49	$73.90	$41.52	$14.78
77315	X	Radiation therapy dose plan	0305	4.06	$201.36	$97.50	$40.27
77321	X	Radiation therapy port plan	0305	4.06	$201.36	$97.50	$40.27
77326	X	Radiation therapy dose plan	0305	4.06	$201.36	$97.50	$40.27
77327	X	Radiation therapy dose plan	0305	4.06	$201.36	$97.50	$40.27
77328	X	Radiation therapy dose plan	0305	4.06	$201.36	$97.50	$40.27
77331	X	Special radiation dosimetry	0304	1.49	$73.90	$41.52	$14.78
77332	X	Radiation treatment aid(s)	0303	2.83	$140.36	$69.28	$28.07
77333	X	Radiation treatment aid(s)	0303	2.83	$140.36	$69.28	$28.07
77334	X	Radiation treatment aid(s)	0303	2.83	$140.36	$69.28	$28.07
77336	X	Radiation physics consult	0311	1.32	$65.46	$31.66	$13.09
77370	X	Radiation physics consult	0311	1.32	$65.46	$31.66	$13.09
77399	X	External radiation dosimetry	0311	1.32	$65.46	$31.66	$13.09
77401	S	Radiation treatment delivery	0300	1.98	$98.20	$47.72	$19.64
77402	S	Radiation treatment delivery	0300	1.98	$98.20	$47.72	$19.64
77403	S	Radiation treatment delivery	0300	1.98	$98.20	$47.72	$19.64
77404	S	Radiation treatment delivery	0300	1.98	$98.20	$47.72	$19.64
77406	S	Radiation treatment delivery	0300	1.98	$98.20	$47.72	$19.64
77407	S	Radiation treatment delivery	0300	1.98	$98.20	$47.72	$19.64
77408	S	Radiation treatment delivery	0300	1.98	$98.20	$47.72	$19.64
77409	S	Radiation treatment delivery	0300	1.98	$98.20	$47.72	$19.64
77411	S	Radiation treatment delivery	0301	2.21	$109.61	$52.53	$21.92
77412	S	Radiation treatment delivery	0301	2.21	$109.61	$52.53	$21.92
77413	S	Radiation treatment delivery	0301	2.21	$109.61	$52.53	$21.92
77414	S	Radiation treatment delivery	0300	1.98	$98.20	$47.72	$19.64
77416	S	Radiation treatment delivery	0301	2.21	$109.61	$52.53	$21.92
77417	X	Radiology port film(s)	0260	0.79	$39.18	$22.02	$7.84
77427	E	Radiation tx management, x5					
77431	E	Radiation therapy management					
77432	E	Stereotactic radiation trmt					
77470	S	Special radiation treatment	0302	8.21	$407.18	$216.55	$81.44
77499	E	Radiation therapy management					
77520	S	Proton beam delivery	0974	8.25	$409.17		$81.83
*77522	S	Proton trmt, simple w/ comp	0974	8.25	$409.17		$81.83
77523	S	Proton beam delivery	0976	18.05	$895.21		$179.04
*77525	S	Proton treatment, complex	0976	18.05	$895.21		$179.04
77600	S	Hyperthermia treatment	0314	5.88	$291.62	$150.95	$58.32
77605	S	Hyperthermia treatment	0314	5.88	$291.62	$150.95	$58.32
77610	S	Hyperthermia treatment	0314	5.88	$291.62	$150.95	$58.32
77615	S	Hyperthermia treatment	0314	5.88	$291.62	$150.95	$58.32
77620	S	Hyperthermia treatment	0314	5.88	$291.62	$150.95	$58.32

CPT codes and descriptions only are copyright American Medical Association. All Rights Reserved. Applicable FARS/DFARS Apply.
Copyright American Dental Association. All rights reserved.
*Code is new in 2001.

ADDENDUM B.—HOSPITAL OUTPATIENT DEPARTMENT (HOPD) PAYMENT STATUS BY HCPCS CODE AND RELATED INFORMATION—Continued

CPT/ HCPCS	HOPD Status Indicator	Description	APC	Relative Weight	Payment Rate	National Unadjusted Coinsurance	Minimum Unadjusted Coinsurance
77750	S	Infuse radioactive materials	0301	2.21	$109.61	$52.53	$21.92
77761	S	Radioelement application	0312	4.09	$202.85	$109.65	$40.57
77762	S	Radioelement application	0312	4.09	$202.85	$109.65	$40.57
77763	S	Radioelement application	0312	4.09	$202.85	$109.65	$40.57
77776	S	Radioelement application	0312	4.09	$202.85	$109.65	$40.57
77777	S	Radioelement application	0312	4.09	$202.85	$109.65	$40.57
77778	S	Radioelement application	0312	4.09	$202.85	$109.65	$40.57
77781	S	High intensity brachytherapy	0313	7.89	$391.31	$164.02	$78.26
77782	S	High intensity brachytherapy	0313	7.89	$391.31	$164.02	$78.26
77783	S	High intensity brachytherapy	0313	7.89	$391.31	$164.02	$78.26
77784	S	High intensity brachytherapy	0313	7.89	$391.31	$164.02	$78.26
77789	S	Radioelement application	0300	1.98	$98.20	$47.72	$19.64
77790	N	Radioelement handling					
77799	S	Radium/radioisotope therapy	0313	7.89	$391.31	$164.02	$78.26
78000	S	Thyroid, single uptake	0290	1.94	$96.21	$55.51	$19.24
78001	S	Thyroid, multiple uptakes	0290	1.94	$96.21	$55.51	$19.24
78003	S	Thyroid suppress/stimul	0290	1.94	$96.21	$55.51	$19.24
78006	S	Thyroid imaging with uptake	0291	3.15	$156.22	$93.14	$31.24
78007	S	Thyroid image, mult uptakes	0291	3.15	$156.22	$93.14	$31.24
78010	S	Thyroid imaging	0290	1.94	$96.21	$55.51	$19.24
78011	S	Thyroid imaging with flow	0290	1.94	$96.21	$55.51	$19.24
78015	S	Thyroid met imaging	0291	3.15	$156.22	$93.14	$31.24
78016	S	Thyroid met imaging/studies	0292	4.36	$216.24	$126.63	$43.25
78018	S	Thyroid met imaging, body	0292	4.36	$216.24	$126.63	$43.25
78020	S	Thyroid met uptake	0292	4.36	$216.24	$126.63	$43.25
78070	S	Parathyroid nuclear imaging	0292	4.36	$216.24	$126.63	$43.25
78075	S	Adrenal nuclear imaging	0292	4.36	$216.24	$126.63	$43.25
78099	S	Endocrine nuclear procedure	0290	1.94	$96.21	$55.51	$19.24
78102	S	Bone marrow imaging, ltd	0291	3.15	$156.22	$93.14	$31.24
78103	S	Bone marrow imaging, mult	0292	4.36	$216.24	$126.63	$43.25
78104	S	Bone marrow imaging, body	0292	4.36	$216.24	$126.63	$43.25
78110	S	Plasma volume, single	0291	3.15	$156.22	$93.14	$31.24
78111	S	Plasma volume, multiple	0291	3.15	$156.22	$93.14	$31.24
78120	S	Red cell mass, single	0291	3.15	$156.22	$93.14	$31.24
78121	S	Red cell mass, multiple	0291	3.15	$156.22	$93.14	$31.24
78122	S	Blood volume	0292	4.36	$216.24	$126.63	$43.25
78130	S	Red cell survival study	0292	4.36	$216.24	$126.63	$43.25
78135	S	Red cell survival kinetics	0292	4.36	$216.24	$126.63	$43.25
78140	S	Red cell sequestration	0292	4.36	$216.24	$126.63	$43.25
78160	S	Plasma iron turnover	0292	4.36	$216.24	$126.63	$43.25
78162	S	Iron absorption exam	0292	4.36	$216.24	$126.63	$43.25
78170	S	Red cell iron utilization	0292	4.36	$216.24	$126.63	$43.25
78172	S	Total body iron estimation	0292	4.36	$216.24	$126.63	$43.25
78185	S	Spleen imaging	0291	3.15	$156.22	$93.14	$31.24
78190	S	Platelet survival, kinetics	0291	3.15	$156.22	$93.14	$31.24
78191	S	Platelet survival	0291	3.15	$156.22	$93.14	$31.24
78195	S	Lymph system imaging	0292	4.36	$216.24	$126.63	$43.25
78199	S	Blood/lymph nuclear exam	0290	1.94	$96.21	$55.51	$19.24
78201	S	Liver imaging	0291	3.15	$156.22	$93.14	$31.24
78202	S	Liver imaging with flow	0291	3.15	$156.22	$93.14	$31.24
78205	S	Liver imaging (3D)	0292	4.36	$216.24	$126.63	$43.25
78206	S	Liver image (3d) w/flow	0292	4.36	$216.24	$126.63	$43.25
78215	S	Liver and spleen imaging	0291	3.15	$156.22	$93.14	$31.24
78216	S	Liver & spleen image/flow	0291	3.15	$156.22	$93.14	$31.24
78220	S	Liver function study	0292	4.36	$216.24	$126.63	$43.25
78223	S	Hepatobiliary imaging	0292	4.36	$216.24	$126.63	$43.25
78230	S	Salivary gland imaging	0291	3.15	$156.22	$93.14	$31.24
78231	S	Serial salivary imaging	0291	3.15	$156.22	$93.14	$31.24
78232	S	Salivary gland function exam	0291	3.15	$156.22	$93.14	$31.24
78258	S	Esophageal motility study	0291	3.15	$156.22	$93.14	$31.24
78261	S	Gastric mucosa imaging	0291	3.15	$156.22	$93.14	$31.24
78262	S	Gastroesophageal reflux exam	0291	3.15	$156.22	$93.14	$31.24
78264	S	Gastric emptying study	0292	4.36	$216.24	$126.63	$43.25
78267	A	Breath tst attain/anal c-14					
78268	A	Breath test analysis, c-14					
78270	S	Vit B-12 absorption exam	0290	1.94	$96.21	$55.51	$19.24
78271	S	Vit B-12 absorp exam, IF	0290	1.94	$96.21	$55.51	$19.24
78272	S	Vit B-12 absorp, combined	0291	3.15	$156.22	$93.14	$31.24
78278	S	Acute GI blood loss imaging	0292	4.36	$216.24	$126.63	$43.25
78282	S	GI protein loss exam	0290	1.94	$96.21	$55.51	$19.24
78290	S	Meckel's divert exam	0291	3.15	$156.22	$93.14	$31.24
78291	S	Leveen/shunt patency exam	0292	4.36	$216.24	$126.63	$43.25
78299	S	GI nuclear procedure	0290	1.94	$96.21	$55.51	$19.24
78300	S	Bone imaging, limited area	0291	3.15	$156.22	$93.14	$31.24

CPT codes and descriptions only are copyright American Medical Association. All Rights Reserved. Applicable FARS/DFARS Apply.
Copyright American Dental Association. All rights reserved.
*Code is new in 2001.

ADDENDUM B.—HOSPITAL OUTPATIENT DEPARTMENT (HOPD) PAYMENT STATUS BY HCPCS CODE AND RELATED INFORMATION—Continued

CPT/ HCPCS	HOPD Status Indicator	Description	APC	Relative Weight	Payment Rate	National Unadjusted Coinsurance	Minimum Unadjusted Coinsurance
78305	S	Bone imaging, multiple areas	0292	4.36	$216.24	$126.63	$43.25
78306	S	Bone imaging, whole body	0292	4.36	$216.24	$126.63	$43.25
78315	S	Bone imaging, 3 phase	0292	4.36	$216.24	$126.63	$43.25
78320	S	Bone imaging (3D)	0292	4.36	$216.24	$126.63	$43.25
78350	X	Bone mineral, single photon	0261	1.38	$68.44	$38.77	$13.69
78351	E	Bone mineral, dual photon					
78399	S	Musculoskeletal nuclear exam	0290	1.94	$96.21	$55.51	$19.24
78414	S	Non-imaging heart function	0292	4.36	$216.24	$126.63	$43.25
78428	S	Cardiac shunt imaging	0292	4.36	$216.24	$126.63	$43.25
78445	S	Vascular flow imaging	0291	3.15	$156.22	$93.14	$31.24
78455	S	Venous thrombosis study	0291	3.15	$156.22	$93.14	$31.24
78456	S	Acute venous thrombus image	0291	3.15	$156.22	$93.14	$31.24
78457	S	Venous thrombosis imaging	0291	3.15	$156.22	$93.14	$31.24
78458	S	Ven thrombosis images, bilat	0291	3.15	$156.22	$93.14	$31.24
78459	E	Heart muscle imaging (PET)					
78460	S	Heart muscle blood, single	0286	7.28	$361.06	$200.04	$72.21
78461	S	Heart muscle blood, multiple	0286	7.28	$361.06	$200.04	$72.21
78464	S	Heart image (3d), single	0286	7.28	$361.06	$200.04	$72.21
78465	S	Heart image (3d), multiple	0286	7.28	$361.06	$200.04	$72.21
78466	S	Heart infarct image	0292	4.36	$216.24	$126.63	$43.25
78468	S	Heart infarct image (ef)	0292	4.36	$216.24	$126.63	$43.25
78469	S	Heart infarct image (3D)	0292	4.36	$216.24	$126.63	$43.25
78472	S	Gated heart, planar, single	0286	7.28	$361.06	$200.04	$72.21
78473	S	Gated heart, multiple	0286	7.28	$361.06	$200.04	$72.21
78478	S	Heart wall motion add-on	0286	7.28	$361.06	$200.04	$72.21
78480	S	Heart function add-on	0286	7.28	$361.06	$200.04	$72.21
78481	S	Heart first pass, single	0286	7.28	$361.06	$200.04	$72.21
78483	S	Heart first pass, multiple	0286	7.28	$361.06	$200.04	$72.21
78491	E	Heart image (pet), single					
78492	E	Heart image (pet), multiple					
78494	S	Heart image, spect	0296	3.57	$177.06	$100.25	$35.41
78496	S	Heart first pass add-on	0296	3.57	$177.06	$100.25	$35.41
78499	S	Cardiovascular nuclear exam	0292	4.36	$216.24	$126.63	$43.25
78580	S	Lung perfusion imaging	0291	3.15	$156.22	$93.14	$31.24
78584	S	Lung V/Q image single breath	0292	4.36	$216.24	$126.63	$43.25
78585	S	Lung V/Q imaging	0292	4.36	$216.24	$126.63	$43.25
78586	S	Aerosol lung image, single	0292	4.36	$216.24	$126.63	$43.25
78587	S	Aerosol lung image, multiple	0292	4.36	$216.24	$126.63	$43.25
78588	S	Perfusion lung image	0292	4.36	$216.24	$126.63	$43.25
78591	S	Vent image, 1 breath, 1 proj	0291	3.15	$156.22	$93.14	$31.24
78593	S	Vent image, 1 proj, gas	0292	4.36	$216.24	$126.63	$43.25
78594	S	Vent image, mult proj, gas	0292	4.36	$216.24	$126.63	$43.25
78596	S	Lung differential function	0292	4.36	$216.24	$126.63	$43.25
78599	S	Respiratory nuclear exam	0291	3.15	$156.22	$93.14	$31.24
78600	S	Brain imaging, ltd static	0292	4.36	$216.24	$126.63	$43.25
78601	S	Brain imaging, ltd w/ flow	0292	4.36	$216.24	$126.63	$43.25
78605	S	Brain imaging, complete	0291	3.15	$156.22	$93.14	$31.24
78606	S	Brain imaging, compl w/flow	0292	4.36	$216.24	$126.63	$43.25
78607	S	Brain imaging (3D)	0292	4.36	$216.24	$126.63	$43.25
78608	E	Brain imaging (PET)					
78609	E	Brain imaging (PET)					
78610	S	Brain flow imaging only	0291	3.15	$156.22	$93.14	$31.24
78615	S	Cerebral blood flow imaging	0292	4.36	$216.24	$126.63	$43.25
78630	S	Cerebrospinal fluid scan	0292	4.36	$216.24	$126.63	$43.25
78635	S	CSF ventriculography	0292	4.36	$216.24	$126.63	$43.25
78645	S	CSF shunt evaluation	0292	4.36	$216.24	$126.63	$43.25
78647	S	Cerebrospinal fluid scan	0292	4.36	$216.24	$126.63	$43.25
78650	S	CSF leakage imaging	0292	4.36	$216.24	$126.63	$43.25
78660	S	Nuclear exam of tear flow	0291	3.15	$156.22	$93.14	$31.24
78699	S	Nervous system nuclear exam	0292	4.36	$216.24	$126.63	$43.25
78700	S	Kidney imaging, static	0291	3.15	$156.22	$93.14	$31.24
78701	S	Kidney imaging with flow	0291	3.15	$156.22	$93.14	$31.24
78704	S	Imaging renogram	0292	4.36	$216.24	$126.63	$43.25
78707	S	Kidney flow/function image	0292	4.36	$216.24	$126.63	$43.25
78708	S	Kidney flow/function image	0292	4.36	$216.24	$126.63	$43.25
78709	S	Kidney flow/function image	0292	4.36	$216.24	$126.63	$43.25
78710	S	Kidney imaging (3D)	0292	4.36	$216.24	$126.63	$43.25
78715	S	Renal vascular flow exam	0291	3.15	$156.22	$93.14	$31.24
78725	S	Kidney function study	0291	3.15	$156.22	$93.14	$31.24
78730	S	Urinary bladder retention	0291	3.15	$156.22	$93.14	$31.24
78740	S	Ureteral reflux study	0291	3.15	$156.22	$93.14	$31.24
78760	S	Testicular imaging	0291	3.15	$156.22	$93.14	$31.24
78761	S	Testicular imaging/flow	0291	3.15	$156.22	$93.14	$31.24
78799	S	Genitourinary nuclear exam	0292	4.36	$216.24	$126.63	$43.25

CPT codes and descriptions only are copyright American Medical Association. All Rights Reserved. Applicable FARS/DFARS Apply.
Copyright American Dental Association. All rights reserved.
*Code is new in 2001.

ADDENDUM B.—HOSPITAL OUTPATIENT DEPARTMENT (HOPD) PAYMENT STATUS BY HCPCS CODE AND RELATED INFORMATION—Continued

CPT/ HCPCS	HOPD Status Indicator	Description	APC	Relative Weight	Payment Rate	National Unadjusted Coinsurance	Minimum Unadjusted Coinsurance
78800	S	Tumor imaging, limited area	0292	4.36	$216.24	$126.63	$43.25
78801	S	Tumor imaging, mult areas	0292	4.36	$216.24	$126.63	$43.25
78802	S	Tumor imaging, whole body	0292	4.36	$216.24	$126.63	$43.25
78803	S	Tumor imaging (3D)	0292	4.36	$216.24	$126.63	$43.25
78805	S	Abscess imaging, ltd area	0292	4.36	$216.24	$126.63	$43.25
78806	S	Abscess imaging, whole body	0292	4.36	$216.24	$126.63	$43.25
78807	S	Nuclear localization/abscess	0292	4.36	$216.24	$126.63	$43.25
78810	E	Tumor imaging (PET)					
78890	N	Nuclear medicine data proc					
78891	N	Nuclear med data proc					
78990	N	Provide diag radionuclide(s)					
78999	S	Nuclear diagnostic exam	0291	3.15	$156.22	$93.14	$31.24
79000	S	Init hyperthyroid therapy	0294	5.13	$254.43	$144.06	$50.89
79001	S	Repeat hyperthyroid therapy	0294	5.13	$254.43	$144.06	$50.89
79020	S	Thyroid ablation	0294	5.13	$254.43	$144.06	$50.89
79030	S	Thyroid ablation, carcinoma	0294	5.13	$254.43	$144.06	$50.89
79035	S	Thyroid metastatic therapy	0294	5.13	$254.43	$144.06	$50.89
79100	S	Hematopoetic nuclear therapy	0294	5.13	$254.43	$144.06	$50.89
79200	S	Intracavitary nuclear trmt	0295	19.85	$984.48	$609.17	$196.90
79300	S	Interstitial nuclear therapy	0294	5.13	$254.43	$144.06	$50.89
79400	S	Nonhemato nuclear therapy	0295	19.85	$984.48	$609.17	$196.90
79420	S	Intravascular nuclear ther	0295	19.85	$984.48	$609.17	$196.90
79440	S	Nuclear joint therapy	0294	5.13	$254.43	$144.06	$50.89
79900	N	Provide ther radiopharm(s)					
79999	S	Nuclear medicine therapy	0294	5.13	$254.43	$144.06	$50.89
80048	A	Basic metabolic panel					
80050	A	General health panel					
80051	A	Electrolyte panel					
80053	A	Comprehen metabolic panel					
80055	A	Obstetric panel					
80061	A	Lipid panel					
80069	A	Renal function panel					
80072	A	Arthritis panel					
80074	A	Acute hepatitis panel					
80076	A	Hepatic function panel					
80090	A	Torch antibody panel					
80100	A	Drug screen					
80101	A	Drug screen					
80102	A	Drug confirmation					
80103	N	Drug analysis, tissue prep					
80150	A	Assay of amikacin					
80152	A	Assay of amitriptyline					
80154	A	Assay of benzodiazepines					
80156	A	Assay of carbamazepine					
*80157	A	Assay of carbamazepine, free					
80158	A	Assay of cyclosporine					
80160	A	Assay of desipramine					
80162	A	Assay of digoxin					
80164	A	Assay, dipropylacetic acid					
80166	A	Assay of doxepin					
80168	A	Assay of ethosuximide					
80170	A	Assay of gentamicin					
80172	A	Assay of gold					
*80173	A	Assay of haloperidol					
80174	A	Assay of imipramine					
80176	A	Assay of lidocaine					
80178	A	Assay of lithium					
80182	A	Assay of nortriptyline					
80184	A	Assay of phenobarbital					
80185	A	Assay of phenytoin, total					
80186	A	Assay of phenytoin, free					
80188	A	Assay of primidone					
80190	A	Assay of procainamide					
80192	A	Assay of procainamide					
80194	A	Assay of quinidine					
80196	A	Assay of salicylate					
80197	A	Assay of tacrolimus					
80198	A	Assay of theophylline					
80200	A	Assay of tobramycin					
80201	A	Assay of topiramate					
80202	A	Assay of vancomycin					
80299	A	Quantitative assay, drug					
80400	A	Acth stimulation panel					
80402	A	Acth stimulation panel					

CPT codes and descriptions only are copyright American Medical Association. All Rights Reserved. Applicable FARS/DFARS Apply.
Copyright American Dental Association. All rights reserved.
*Code is new in 2001.

ADDENDUM B.—HOSPITAL OUTPATIENT DEPARTMENT (HOPD) PAYMENT STATUS BY HCPCS CODE AND RELATED INFORMATION—Continued

CPT/ HCPCS	HOPD Status Indicator	Description	APC	Relative Weight	Payment Rate	National Unadjusted Coinsurance	Minimum Unadjusted Coinsurance
80406	A	Acth stimulation panel					
80408	A	Aldosterone suppression eval					
80410	A	Calcitonin stimul panel					
80412	A	CRH stimulation panel					
80414	A	Testosterone response					
80415	A	Estradiol response panel					
80416	A	Renin stimulation panel					
80417	A	Renin stimulation panel					
80418	A	Pituitary evaluation panel					
80420	A	Dexamethasone panel					
80422	A	Glucagon tolerance panel					
80424	A	Glucagon tolerance panel					
80426	A	Gonadotropin hormone panel					
80428	A	Growth hormone panel					
80430	A	Growth hormone panel					
80432	A	Insulin suppression panel					
80434	A	Insulin tolerance panel					
80435	A	Insulin tolerance panel					
80436	A	Metyrapone panel					
80438	A	TRH stimulation panel					
80439	A	TRH stimulation panel					
80440	A	TRH stimulation panel					
80500	X	Lab pathology consultation	0343	0.45	$22.32	$12.16	$4.46
80502	X	Lab pathology consultation	0343	0.45	$22.32	$12.16	$4.46
81000	A	Urinalysis, nonauto w/scope					
81001	A	Urinalysis, auto w/scope					
81002	A	Urinalysis nonauto w/o scope					
81003	A	Urinalysis, auto, w/o scope					
81005	A	Urinalysis					
81007	A	Urine screen for bacteria					
81015	A	Microscopic exam of urine					
81020	A	Urinalysis, glass test					
81025	A	Urine pregnancy test					
81050	A	Urinalysis, volume measure					
81099	X	Urinalysis test procedure	0349	0.48	$23.65	$4.73	$4.73
82000	A	Assay of blood acetaldehyde					
82003	A	Assay of acetaminophen					
82009	A	Test for acetone/ketones					
82010	A	Acetone assay					
82013	A	Acetylcholinesterase assay					
82016	A	Acylcarnitines, qual					
82017	A	Acylcarnitines, quant					
82024	A	Assay of acth					
82030	A	Assay of adp & amp					
82040	A	Assay of serum albumin					
82042	A	Assay of urine albumin					
82043	A	Microalbumin, quantitative					
82044	A	Microalbumin, semiquant					
82055	A	Assay of ethanol					
82075	A	Assay of breath ethanol					
82085	A	Assay of aldolase					
82088	A	Assay of aldosterone					
82101	A	Assay of urine alkaloids					
82103	A	Alpha-1-antitrypsin, total					
82104	A	Alpha-1-antitrypsin, pheno					
82105	A	Alpha-fetoprotein, serum					
82106	A	Alpha-fetoprotein, amniotic					
82108	A	Assay of aluminum					
82120	A	Amines, vaginal fluid qual					
82127	A	Amino acid, single qual					
82128	A	Amino acids, mult qual					
82131	A	Amino acids, single quant					
82135	A	Assay, aminolevulinic acid					
82136	A	Amino acids, quant, 2-5					
82139	A	Amino acids, quan, 6 or more					
82140	A	Assay of ammonia					
82143	A	Amniotic fluid scan					
82145	A	Assay of amphetamines					
82150	A	Assay of amylase					
82154	A	Androstanediol glucuronide					
82157	A	Assay of androstenedione					
82160	A	Assay of androsterone					
82163	A	Assay of angiotensin II					
82164	A	Angiotensin I enzyme test					

CPT codes and descriptions only are copyright American Medical Association. All Rights Reserved. Applicable FARS/DFARS Apply.
Copyright American Dental Association. All rights reserved.
*Code is new in 2001.

ADDENDUM B.—HOSPITAL OUTPATIENT DEPARTMENT (HOPD) PAYMENT STATUS BY HCPCS CODE AND RELATED INFORMATION—Continued

CPT/ HCPCS	HOPD Status Indicator	Description	APC	Relative Weight	Payment Rate	National Unadjusted Coinsurance	Minimum Unadjusted Coinsurance
82172	A	Assay of apolipoprotein					
82175	A	Assay of arsenic					
82180	A	Assay of ascorbic acid					
82190	A	Atomic absorption					
82205	A	Assay of barbiturates					
82232	A	Assay of beta-2 protein					
82239	A	Bile acids, total					
82240	A	Bile acids, cholylglycine					
82247	A	Bilirubin, total					
82248	A	Bilirubin, direct					
82251D	A	Assay of bilirubin					
82252	A	Fecal bilirubin test					
82261	A	Assay of biotinidase					
82270	A	Test for blood, feces					
82273	A	Test for blood, other source					
82286	A	Assay of bradykinin					
82300	A	Assay of cadmium					
82306	A	Assay of vitamin D					
82307	A	Assay of vitamin D					
82308	A	Assay of calcitonin					
82310	A	Assay of calcium					
82330	A	Assay of calcium					
82331	A	Calcium infusion test					
82340	A	Assay of calcium in urine					
82355	A	Calculus (stone) analysis					
82360	A	Calculus (stone) assay					
82365	A	Calculus (stone) assay					
82370	A	X-ray assay, calculus					
*82373	A	Carb deficient transferrin					
82374	A	Assay, blood carbon dioxide					
82375	A	Assay, blood carbon monoxide					
82376	A	Test for carbon monoxide					
82378	A	Carcinoembryonic antigen					
82379	A	Assay of carnitine					
82380	A	Assay of carotene					
82382	A	Assay, urine catecholamines					
82383	A	Assay, blood catecholamines					
82384	A	Assay, three catecholamines					
82387	A	Assay of cathepsin-d					
82390	A	Assay of ceruloplasmin					
82397	A	Chemiluminescent assay					
82415	A	Assay of chloramphenicol					
82435	A	Assay of blood chloride					
82436	A	Assay of urine chloride					
82438	A	Assay, other fluid chlorides					
82441	A	Test for chlorohydrocarbons					
82465	A	Assay of serum cholesterol					
82480	A	Assay, serum cholinesterase					
82482	A	Assay, rbc cholinesterase					
82485	A	Assay, chondroitin sulfate					
82486	A	Gas/liquid chromatography					
82487	A	Paper chromatography					
82488	A	Paper chromatography					
82489	A	Thin layer chromatography					
82491	A	Chromotography, quant, sing					
82492	A	Chromotography, quant, mult					
82495	A	Assay of chromium					
82507	A	Assay of citrate					
82520	A	Assay of cocaine					
82523	A	Collagen crosslinks					
82525	A	Assay of copper					
82528	A	Assay of corticosterone					
82530	A	Cortisol, free					
82533	A	Total cortisol					
82540	A	Assay of creatine					
82541	A	Column chromotography, qual					
82542	A	Column chromotography, quant					
82543	A	Column chromotograph/isotope					
82544	A	Column chromotograph/isotope					
82550	A	Assay of ck (cpk)					
82552	A	Assay of cpk in blood					
82553	A	Creatine, MB fraction					
82554	A	Creatine, isoforms					
82565	A	Assay of creatinine					

CPT codes and descriptions only are copyright American Medical Association. All Rights Reserved. Applicable FARS/DFARS Apply.
Copyright American Dental Association. All rights reserved.
*Code is new in 2001.

ADDENDUM B.—HOSPITAL OUTPATIENT DEPARTMENT (HOPD) PAYMENT STATUS BY HCPCS CODE AND RELATED INFORMATION—Continued

CPT/ HCPCS	HOPD Status Indicator	Description	APC	Relative Weight	Payment Rate	National Unadjusted Coinsurance	Minimum Unadjusted Coinsurance
82570	A	Assay of urine creatinine					
82575	A	Creatinine clearance test					
82585	A	Assay of cryofibrinogen					
82595	A	Assay of cryoglobulin					
82600	A	Assay of cyanide					
82607	A	Vitamin B-12					
82608	A	B-12 binding capacity					
82615	A	Test for urine cystines					
82626	A	Dehydroepiandrosterone					
82627	A	Dehydroepiandrosterone					
82633	A	Desoxycorticosterone					
82634	A	Deoxycortisol					
82638	A	Assay of dibucaine number					
82646	A	Assay of dihydrocodeinone					
82649	A	Assay of dihydromorphinone					
82651	A	Assay of dihydrotestosterone					
82652	A	Assay of dihydroxyvitamin d					
82654	A	Assay of dimethadione					
82657	A	Enzyme cell activity					
82658	A	Enzyme cell activity, ra					
82664	A	Electrophoretic test					
82666	A	Assay of epiandrosterone					
82668	A	Assay of erythropoietin					
82670	A	Assay of estradiol					
82671	A	Assay of estrogens					
82672	A	Assay of estrogen					
82677	A	Assay of estriol					
82679	A	Assay of estrone					
82690	A	Assay of ethchlorvynol					
82693	A	Assay of ethylene glycol					
82696	A	Assay of etiocholanolone					
82705	A	Fats/lipids, feces, qual					
82710	A	Fats/lipids, feces, quant					
82715	A	Assay of fecal fat					
82725	A	Assay of blood fatty acids					
82726	A	Long chain fatty acids					
82728	A	Assay of ferritin					
82731	A	Assay of fetal fibronectin					
82735	A	Assay of fluoride					
82742	A	Assay of flurazepam					
82746	A	Blood folic acid serum					
82747	A	Assay of folic acid, rbc					
82757	A	Assay of semen fructose					
82759	A	Assay of rbc galactokinase					
82760	A	Assay of galactose					
82775	A	Assay galactose transferase					
82776	A	Galactose transferase test					
82784	A	Assay of gammaglobulin igm					
82785	A	Assay of gammaglobulin ige					
82787	A	Igg 1, 2, 3 and 4					
82800	A	Blood pH					
82803	A	Blood gases: pH, pO2 & pCO2					
82805	A	Blood gases W/O2 saturation					
82810	A	Blood gases, O2 sat only					
82820	A	Hemoglobin-oxygen affinity					
82926	A	Assay of gastric acid					
82928	A	Assay of gastric acid					
82938	A	Gastrin test					
82941	A	Assay of gastrin					
82943	A	Assay of glucagon					
*82945	A	Glucose, body fluid other than blood					
82946	A	Glucagon tolerance test					
82947	A	Assay of glucose, quant					
82948	A	Reagent strip/blood glucose					
82950	A	Glucose test					
82951	A	Glucose tolerance test (GTT)					
82952	A	GTT-added samples					
82953	A	Glucose-tolbutamide test					
82955	A	Assay of g6pd enzyme					
82960	A	Test for G6PD enzyme					
82962	A	Glucose blood test					
82963	A	Assay of glucosidase					
82965	A	Assay of gdh enzyme					
82975	A	Assay of glutamine					

CPT codes and descriptions only are copyright American Medical Association. All Rights Reserved. Applicable FARS/DFARS Apply.
Copyright American Dental Association. All rights reserved.
*Code is new in 2001.

ADDENDUM B.—HOSPITAL OUTPATIENT DEPARTMENT (HOPD) PAYMENT STATUS BY HCPCS CODE AND RELATED INFORMATION—Continued

CPT/ HCPCS	HOPD Status Indicator	Description	APC	Relative Weight	Payment Rate	National Unadjusted Coinsurance	Minimum Unadjusted Coinsurance
82977	A	Assay of GGT					
82978	A	Assay of glutathione					
82979	A	Assay, rbc glutathione					
82980	A	Assay of glutethimide					
82985	A	Glycated protein					
83001	A	Gonadotropin (FSH)					
83002	A	Gonadotropin (LH)					
83003	A	Assay, growth hormone (hgh)					
83008	A	Assay of guanosine					
83010	A	Assay of haptoglobin, quant					
83012	A	Assay of haptoglobins					
83013	A	H pylori breath tst analysis					
83014	A	H pylori drug admin/collect					
83015	A	Heavy metal screen					
83018	A	Quantitative screen, metals					
83020	A	Hemoglobin electrophoresis					
83021	A	Hemoglobin chromotography					
83026	A	Hemoglobin, copper sulfate					
83030	A	Fetal hemoglobin assay					
83033	A	Fetal fecal hemoglobin assay					
83036	A	Glycated hemoglobin test					
83045	A	Blood methemoglobin test					
83050	A	Blood methemoglobin assay					
83051	A	Assay of plasma hemoglobin					
83055	A	Blood sulfhemoglobin test					
83060	A	Blood sulfhemoglobin assay					
83065	A	Assay of hemoglobin heat					
83068	A	Hemoglobin stability screen					
83069	A	Assay of urine hemoglobin					
83070	A	Assay of hemosiderin, qual					
83071	A	Assay of hemosiderin, quant					
83080	A	Assay of b hexosaminidase					
83088	A	Assay of histamine					
*83090	A	Homocystine					
83150	A	Assay of for hva					
83491	A	Assay of corticosteroids					
83497	A	Assay of 5-hiaa					
83498	A	Assay of progesterone					
83499	A	Assay of progesterone					
83500	A	Assay, free hydroxyproline					
83505	A	Assay, total hydroxyproline					
83516	A	Immunoassay, nonantibody					
83518	A	Immunoassay, dipstick					
83519	A	Immunoassay, nonantibody					
83520	A	Immunoassay, RIA					
83525	A	Assay of insulin					
83527	A	Assay of insulin					
83528	A	Assay of intrinsic factor					
83540	A	Assay of iron					
83550	A	Iron binding test					
83570	A	Assay of idh enzyme					
83582	A	Assay of ketogenic steroids					
83586	A	Assay 17- ketosteroids					
83593	A	Fractionation, ketosteroids					
83605	A	Assay of lactic acid					
83615	A	Lactate (LD) (LDH) enzyme					
83625	A	Assay of ldh enzymes					
83632	A	Placental lactogen					
83633	A	Test urine for lactose					
83634	A	Assay of urine for lactose					
83655	A	Assay of lead					
83661	A	Assay of l/s ratio					
83662	A	L/S ratio, foam stability					
*83663	A	Fetal lung maturity, fluor polar					
*83664	A	Fetal lung maturity, lam body dens					
83670	A	Assay of lap enzyme					
83690	A	Assay of lipase					
83715	A	Assay of blood lipoproteins					
83716	A	Assay of blood lipoproteins					
83718	A	Assay of lipoprotein					
83719	A	Assay of blood lipoprotein					
83721	A	Assay of blood lipoprotein					
83727	A	Assay of lrh hormone					
83735	A	Assay of magnesium					

CPT codes and descriptions only are copyright American Medical Association. All Rights Reserved. Applicable FARS/DFARS Apply.
Copyright American Dental Association. All rights reserved.
*Code is new in 2001.

ADDENDUM B.—HOSPITAL OUTPATIENT DEPARTMENT (HOPD) PAYMENT STATUS BY HCPCS CODE AND RELATED INFORMATION—Continued

CPT/ HCPCS	HOPD Status Indicator	Description	APC	Relative Weight	Payment Rate	National Unadjusted Coinsurance	Minimum Unadjusted Coinsurance
83775	A	Assay of md enzyme					
83785	A	Assay of manganese					
83788	A	Mass spectrometry qual					
83789	A	Mass spectrometry quant					
83805	A	Assay of meprobamate					
83825	A	Assay of mercury					
83835	A	Assay of metanephrines					
83840	A	Assay of methadone					
83857	A	Assay of methemalbumin					
83858	A	Assay of methsuximide					
83864	A	Mucopolysaccharides					
83866	A	Mucopolysaccharides screen					
83872	A	Assay synovial fluid mucin					
83873	A	Assay of csf protein					
83874	A	Assay of myoglobin					
83883	A	Assay, nephelometry not spec					
83885	A	Assay of nickel					
83887	A	Assay of nicotine					
83890	A	Molecule isolate					
83891	A	Molecule isolate nucleic					
83892	A	Molecular diagnostics					
83893	A	Molecule dot/slot/blot					
83894	A	Molecule gel electrophor					
83896	A	Molecular diagnostics					
83897	A	Molecule nucleic transfer					
83898	A	Molecule nucleic ampli					
83901	A	Molecule nucleic ampli					
83902	A	Molecular diagnostics					
83903	A	Molecule mutation scan					
83904	A	Molecule mutation identify					
83905	A	Molecule mutation identify					
83906	A	Molecule mutation identify					
83912	A	Genetic examination					
83915	A	Assay of nucleotidase					
83916	A	Oligoclonal bands					
83918	A	Assay, organic acids quant					
83919	A	Assay, organic acids qual					
*83921	A	Assay, organic acid, single, quant					
83925	A	Assay of opiates					
83930	A	Assay of blood osmolality					
83935	A	Assay of urine osmolality					
83937	A	Assay of osteocalcin					
83945	A	Assay of oxalate					
83970	A	Assay of parathormone					
83986	A	Assay of body fluid acidity					
83992	A	Assay for phencyclidine					
84022	A	Assay of phenothiazine					
84030	A	Assay of blood pku					
84035	A	Assay of phenylketones					
84060	A	Assay acid phosphatase					
84061	A	Phosphatase, forensic exam					
84066	A	Assay prostate phosphatase					
84075	A	Assay alkaline phosphatase					
84078	A	Assay alkaline phosphatase					
84080	A	Assay alkaline phosphatases					
84081	A	Amniotic fluid enzyme test					
84085	A	Assay of rbc pg6d enzyme					
84087	A	Assay phosphohexose enzymes					
84100	A	Assay of phosphorus					
84105	A	Assay of urine phosphorus					
84106	A	Test for porphobilinogen					
84110	A	Assay of porphobilinogen					
84119	A	Test urine for porphyrins					
84120	A	Assay of urine porphyrins					
84126	A	Assay of feces porphyrins					
84127	A	Assay of feces porphyrins					
84132	A	Assay of serum potassium					
84133	A	Assay of urine potassium					
84134	A	Assay of prealbumin					
84135	A	Assay of pregnanediol					
84138	A	Assay of pregnanetriol					
84140	A	Assay of pregnenolone					
84143	A	Assay of 17-hydroxypregneno					
84144	A	Assay of progesterone					

CPT codes and descriptions only are copyright American Medical Association. All Rights Reserved. Applicable FARS/DFARS Apply.
Copyright American Dental Association. All rights reserved.
*Code is new in 2001.

ADDENDUM B.—HOSPITAL OUTPATIENT DEPARTMENT (HOPD) PAYMENT STATUS BY HCPCS CODE AND RELATED INFORMATION—Continued

CPT/ HCPCS	HOPD Status Indicator	Description	APC	Relative Weight	Payment Rate	National Unadjusted Coinsurance	Minimum Unadjusted Coinsurance
84146	A	Assay of prolactin					
84150	A	Assay of prostaglandin					
*84152	A	PSA, complexed					
84153	A	Assay of psa, total					
84154	A	Assay of psa, free					
84155	A	Assay of protein					
84160	A	Assay of serum protein					
84165	A	Assay of serum proteins					
84181	A	Western blot test					
84182	A	Protein, western blot test					
84202	A	Assay RBC protoporphyrin					
84203	A	Test RBC protoporphyrin					
84206	A	Assay of proinsulin					
84207	A	Assay of vitamin b-6					
84210	A	Assay of pyruvate					
84220	A	Assay of pyruvate kinase					
84228	A	Assay of quinine					
84233	A	Assay of estrogen					
84234	A	Assay of progesterone					
84235	A	Assay of endocrine hormone					
84238	A	Assay, nonendocrine receptor					
84244	A	Assay of renin					
84252	A	Assay of vitamin b-2					
84255	A	Assay of selenium					
84260	A	Assay of serotonin					
84270	A	Assay of sex hormone globul					
84275	A	Assay of sialic acid					
84285	A	Assay of silica					
84295	A	Assay of serum sodium					
84300	A	Assay of urine sodium					
84305	A	Assay of somatomedin					
84307	A	Assay of somatostatin					
84311	A	Spectrophotometry					
84315	A	Body fluid specific gravity					
84375	A	Chromatogram assay, sugars					
84376	A	Sugars, single, qual					
84377	A	Sugars, multiple, qual					
84378	A	Sugars single quant					
84379	A	Sugars multiple quant					
84392	A	Assay of urine sulfate					
84402	A	Assay of testosterone					
84403	A	Assay of total testosterone					
84425	A	Assay of vitamin b-1					
84430	A	Assay of thiocyanate					
84432	A	Assay of thyroglobulin					
84436	A	Assay of total thyroxine					
84437	A	Assay of neonatal thyroxine					
84439	A	Assay of free thyroxine					
84442	A	Assay of thyroid activity					
84443	A	Assay thyroid stim hormone					
84445	A	Assay of tsi					
84446	A	Assay of vitamin e					
84449	A	Assay of transcortin					
84450	A	Transferase (AST) (SGOT)					
84460	A	Alanine amino (ALT) (SGPT)					
84466	A	Assay of transferrin					
84478	A	Assay of triglycerides					
84479	A	Assay of thyroid (t3 or t4)					
84480	A	Assay, triiodothyronine (t3)					
84481	A	Free assay (FT-3)					
84482	A	T3 reverse					
84484	A	Assay of troponin, quant					
84485	A	Assay duodenal fluid trypsin					
84488	A	Test feces for trypsin					
84490	A	Assay of feces for trypsin					
84510	A	Assay of tyrosine					
84512	A	Assay of troponin, qual					
84520	A	Assay of urea nitrogen					
84525	A	Urea nitrogen semi-quant					
84540	A	Assay of urine/urea-n					
84545	A	Urea-N clearance test					
84550	A	Assay of blood/uric acid					
84560	A	Assay of urine/uric acid					
84577	A	Assay of feces/urobilinogen					

CPT codes and descriptions only are copyright American Medical Association. All Rights Reserved. Applicable FARS/DFARS Apply.
Copyright American Dental Association. All rights reserved.
*Code is new in 2001.

ADDENDUM B.—HOSPITAL OUTPATIENT DEPARTMENT (HOPD) PAYMENT STATUS BY HCPCS CODE AND RELATED INFORMATION—Continued

CPT/ HCPCS	HOPD Status Indicator	Description	APC	Relative Weight	Payment Rate	National Unadjusted Coinsurance	Minimum Unadjusted Coinsurance
84578	A	Test urine urobilinogen					
84580	A	Assay of urine urobilinogen					
84583	A	Assay of urine urobilinogen					
84585	A	Assay of urine vma					
84586	A	Assay of vip					
84588	A	Assay of vasopressin					
84590	A	Assay of vitamin a					
*84591	A	Vitamin, NOS					
84597	A	Assay of vitamin k					
84600	A	Assay of volatiles					
84620	A	Xylose tolerance test					
84630	A	Assay of zinc					
84681	A	Assay of c-peptide					
84702	A	Chorionic gonadotropin test					
84703	A	Chorionic gonadotropin assay					
84830	A	Ovulation tests					
84999	X	Clinical chemistry test	0349	0.48	$23.65	$4.73	$4.73
85002	A	Bleeding time test					
85007	A	Differential WBC count					
85008	A	Nondifferential WBC count					
85009	A	Differential WBC count					
85013	A	Hematocrit					
85014	A	Hematocrit					
85018	A	Hemoglobin					
85021	A	Automated hemogram					
85022	A	Automated hemogram					
85023	A	Automated hemogram					
85024	A	Automated hemogram					
85025	A	Automated hemogram					
85027	A	Automated hemogram					
85031	A	Manual hemogram, cbc					
85041	A	Red blood cell (RBC) count					
85044	A	Reticulocyte count					
85045	A	Reticulocyte count					
85046	A	Reticyte/hgb concentrate					
85048	A	White blood cell (WBC) count					
85060	X	Blood smear interpretation	0342	0.26	$12.90	$8.03	$2.58
85095	T	Bone marrow aspiration	0003	0.98	$48.61	$27.99	$9.72
85097	X	Bone marrow interpretation	0344	0.79	$39.18	$23.63	$7.84
85102	T	Bone marrow biopsy	0003	0.98	$48.61	$27.99	$9.72
85130	A	Chromogenic substrate assay					
85170	A	Blood clot retraction					
85175	A	Blood clot lysis time					
85210	A	Blood clot factor II test					
85220	A	Blood clot factor V test					
85230	A	Blood clot factor VII test					
85240	A	Blood clot factor VIII test					
85244	A	Blood clot factor VIII test					
85245	A	Blood clot factor VIII test					
85246	A	Blood clot factor VIII test					
85247	A	Blood clot factor VIII test					
85250	A	Blood clot factor IX test					
85260	A	Blood clot factor X test					
85270	A	Blood clot factor XI test					
85280	A	Blood clot factor XII test					
85290	A	Blood clot factor XIII test					
85291	A	Blood clot factor XIII test					
85292	A	Blood clot factor assay					
85293	A	Blood clot factor assay					
85300	A	Antithrombin III test					
85301	A	Antithrombin III test					
85302	A	Blood clot inhibitor antigen					
85303	A	Blood clot inhibitor test					
85305	A	Blood clot inhibitor assay					
85306	A	Blood clot inhibitor test					
*85307	A	Activated protein C resistance					
85335	A	Factor inhibitor test					
85337	A	Thrombomodulin					
85345	A	Coagulation time					
85347	A	Coagulation time					
85348	A	Coagulation time					
85360	A	Euglobulin lysis					
85362	A	Fibrin degradation products					
85366	A	Fibrinogen test					

CPT codes and descriptions only are copyright American Medical Association. All Rights Reserved. Applicable FARS/DFARS Apply.
Copyright American Dental Association. All rights reserved.
*Code is new in 2001.

ADDENDUM B.—HOSPITAL OUTPATIENT DEPARTMENT (HOPD) PAYMENT STATUS BY HCPCS CODE AND RELATED INFORMATION—Continued

CPT/ HCPCS	HOPD Status Indicator	Description	APC	Relative Weight	Payment Rate	National Unadjusted Coinsurance	Minimum Unadjusted Coinsurance
85370	A	Fibrinogen test					
85378	A	Fibrin degradation					
85379	A	Fibrin degradation					
85384	A	Fibrinogen					
85385	A	Fibrinogen					
85390	A	Fibrinolysins screen					
85400	A	Fibrinolytic plasmin					
85410	A	Fibrinolytic antiplasmin					
85415	A	Fibrinolytic plasminogen					
85420	A	Fibrinolytic plasminogen					
85421	A	Fibrinolytic plasminogen					
85441	A	Heinz bodies, direct					
85445	A	Heinz bodies, induced					
85460	A	Hemoglobin, fetal					
85461	A	Hemoglobin, fetal					
85475	A	Hemolysin					
85520	A	Heparin assay					
85525	A	Heparin					
85530	A	Heparin-protamine tolerance					
85535	A	Iron stain, blood cells					
*85536	A	Iron stain, peripheral blood					
85540	A	Wbc alkaline phosphatase					
85547	A	RBC mechanical fragility					
85549	A	Muramidase					
85555	A	RBC osmotic fragility					
85557	A	RBC osmotic fragility					
85576	A	Blood platelet aggregation					
85585	A	Blood platelet estimation					
85590	A	Platelet count, manual					
85595	A	Platelet count, automated					
85597	A	Platelet neutralization					
85610	A	Prothrombin time					
85611	A	Prothrombin test					
85612	A	Viper venom prothrombin time					
85613	A	Russell viper venom, diluted					
85635	A	Reptilase test					
85651	A	Rbc sed rate, nonautomated					
85652	A	Rbc sed rate, automated					
85660	A	RBC sickle cell test					
85670	A	Thrombin time, plasma					
85675	A	Thrombin time, titer					
85705	A	Thromboplastin inhibition					
85730	A	Thromboplastin time, partial					
85732	A	Thromboplastin time, partial					
85810	A	Blood viscosity examination					
85999	X	Hematology procedure	0349	0.48	$23.65	$4.73	$4.73
86000	A	Agglutinins, febrile					
*86001	A	Allergen specific IgE, quant/semiquant					
86003	A	Allergen specific IgE					
86005	A	Allergen specific IgE					
86021	A	WBC antibody identification					
86022	A	Platelet antibodies					
86023	A	Immunoglobulin assay					
86038	A	Antinuclear antibodies					
86039	A	Antinuclear antibodies (ANA)					
86060	A	Antistreptolysin o, titer					
86063	A	Antistreptolysin o, screen					
86077	X	Physician blood bank service	0343	0.45	$22.32	$12.16	$4.46
86078	X	Physician blood bank service	0344	0.79	$39.18	$23.63	$7.84
86079	X	Physician blood bank service	0344	0.79	$39.18	$23.63	$7.84
86140	A	C-reactive protein					
*86146	A	Beta 2 glycoprotein I antibody					
86147	A	Cardiolipin antibody					
86148	A	Phospholipid antibody					
86155	A	Chemotaxis assay					
86156	A	Cold agglutinin, screen					
86157	A	Cold agglutinin, titer					
86160	A	Complement, antigen					
86161	A	Complement/function activity					
86162	A	Complement, total (CH50)					
86171	A	Complement fixation, each					
86185	A	Counterimmunoelectrophoresis					
86215	A	Deoxyribonuclease, antibody					
86225	A	DNA antibody					

CPT codes and descriptions only are copyright American Medical Association. All Rights Reserved. Applicable FARS/DFARS Apply.
Copyright American Dental Association. All rights reserved.
*Code is new in 2001.

ADDENDUM B.—HOSPITAL OUTPATIENT DEPARTMENT (HOPD) PAYMENT STATUS BY HCPCS CODE AND RELATED INFORMATION—Continued

CPT/ HCPCS	HOPD Status Indicator	Description	APC	Relative Weight	Payment Rate	National Unadjusted Coinsurance	Minimum Unadjusted Coinsurance
86226	A	DNA antibody, single strand					
86235	A	Nuclear antigen antibody					
86243	A	Fc receptor					
86255	A	Fluorescent antibody, screen					
86256	A	Fluorescent antibody, titer					
86277	A	Growth hormone antibody					
86280	A	Hemagglutination inhibition					
*86294	A	Tumor antigen, qual or semiquant					
*86300	A	Tumor antigen, quant; CA 15-3					
*86301	A	Tumor antigen, quant; CA 19-9					
*86304	A	Tumor antigen, quant; CA 125					
86308	A	Heterophile antibodies					
86309	A	Heterophile antibodies					
86310	A	Heterophile antibodies					
86316	A	Immunoassay, tumor antigen					
86317	A	Immunoassay,infectious agent					
86318	A	Immunoassay,infectious agent					
86320	A	Serum immunoelectrophoresis					
86325	A	Other immunoelectrophoresis					
86327	A	Immunoelectrophoresis assay					
86329	A	Immunodiffusion					
86331	A	Immunodiffusion ouchterlony					
86332	A	Immune complex assay					
86334	A	Immunofixation procedure					
86337	A	Insulin antibodies					
86340	A	Intrinsic factor antibody					
86341	A	Islet cell antibody					
86343	A	Leukocyte histamine release					
86344	A	Leukocyte phagocytosis					
86353	A	Lymphocyte transformation					
86359	A	T cells, total count					
86360	A	T cell, absolute count/ratio					
86361	A	T cell, absolute count					
86376	A	Microsomal antibody					
86378	A	Migration inhibitory factor					
86382	A	Neutralization test, viral					
86384	A	Nitroblue tetrazolium dye					
86403	A	Particle agglutination test					
86406	A	Particle agglutination test					
86430	A	Rheumatoid factor test					
86431	A	Rheumatoid factor, quant					
86485	X	Skin test, candida	0341	0.13	$6.44	$3.67	$1.29
86490	X	Coccidioidomycosis skin test	0341	0.13	$6.44	$3.67	$1.29
86510	X	Histoplasmosis skin test	0341	0.13	$6.44	$3.67	$1.29
86580	X	TB intradermal test	0341	0.13	$6.44	$3.67	$1.29
86585	X	TB tine test	0341	0.13	$6.44	$3.67	$1.29
86586	X	Skin test, unlisted	0341	0.13	$6.44	$3.67	$1.29
86590	A	Streptokinase, antibody					
86592	A	Blood serology, qualitative					
86593	A	Blood serology, quantitative					
86602	A	Antinomyces antibody					
86603	A	Adenovirus antibody					
86606	A	Aspergillus antibody					
86609	A	Bacterium antibody					
*86611	A	Bartonella antibody					
86612	A	Blastomyces antibody					
86615	A	Bordetella antibody					
86617	A	Lyme disease antibody					
86618	A	Lyme disease antibody					
86619	A	Borrelia antibody					
86622	A	Brucella antibody					
86625	A	Campylobacter antibody					
86628	A	Candida antibody					
86631	A	Chlamydia antibody					
86632	A	Chlamydia igm antibody					
86635	A	Coccidioides antibody					
86638	A	Q fever antibody					
86641	A	Cryptococcus antibody					
86644	A	CMV antibody					
86645	A	CMV antibody, IgM					
86648	A	Diphtheria antibody					
86651	A	Encephalitis antibody					
86652	A	Encephalitis antibody					
86653	A	Encephalitis antibody					

CPT codes and descriptions only are copyright American Medical Association. All Rights Reserved. Applicable FARS/DFARS Apply.
Copyright American Dental Association. All rights reserved.
*Code is new in 2001.

ADDENDUM B.—HOSPITAL OUTPATIENT DEPARTMENT (HOPD) PAYMENT STATUS BY HCPCS CODE AND RELATED INFORMATION—Continued

CPT/ HCPCS	HOPD Status Indicator	Description	APC	Relative Weight	Payment Rate	National Unadjusted Coinsurance	Minimum Unadjusted Coinsurance
86654	A	Encephalitis antibody					
86658	A	Enterovirus antibody					
86663	A	Epstein-barr antibody					
86664	A	Epstein-barr antibody					
86665	A	Epstein-barr antibody					
*86666	A	Erlichia antibody					
86668	A	Francisella tularensis					
86671	A	Fungus antibody					
86674	A	Giardia lamblia antibody					
86677	A	Helicobacter pylori					
86682	A	Helminth antibody					
*86683	A	Fecal hgb antibody					
86684	A	Hemophilus influenza					
86687	A	Htlv-i antibody					
86688	A	Htlv-ii antibody					
86689	A	HTLV/HIV confirmatory test					
86692	A	Hepatitis, delta agent					
*86696	A	Herpes simplex type 2 antibody					
86694	A	Herpes simplex test					
86695	A	Herpes simplex test					
86698	A	Histoplasma					
86701	A	HIV-1					
86702	A	HIV-2					
86703	A	HIV-1/HIV-2, single assay					
86704	A	Hep b core antibody, igg/igm					
86705	A	Hep b core antibody, igm					
86706	A	Hep b surface antibody					
86707	A	Hep be antibody					
86708	A	Hep a antibody, igg/igm					
86709	A	Hep a antibody, igm					
86710	A	Influenza virus antibody					
86713	A	Legionella antibody					
86717	A	Leishmania antibody					
86720	A	Leptospira antibody					
86723	A	Listeria monocytogenes ab					
86727	A	Lymph choriomeningitis ab					
86729	A	Lympho venereum antibody					
86732	A	Mucormycosis antibody					
86735	A	Mumps antibody					
86738	A	Mycoplasma antibody					
86741	A	Neisseria meningitidis					
86744	A	Nocardia antibody					
86747	A	Parvovirus antibody					
86750	A	Malaria antibody					
86753	A	Protozoa antibody nos					
86756	A	Respiratory virus antibody					
*86757	A	Rickettsia antibody					
86759	A	Rotavirus antibody					
86762	A	Rubella antibody					
86765	A	Rubeola antibody					
86768	A	Salmonella antibody					
86771	A	Shigella antibody					
86774	A	Tetanus antibody					
86777	A	Toxoplasma antibody					
86778	A	Toxoplasma antibody, igm					
86781	A	Treponema pallidum, confirm					
86784	A	Trichinella antibody					
86787	A	Varicella-zoster antibody					
86790	A	Virus antibody nos					
86793	A	Yersinia antibody					
86800	A	Thyroglobulin antibody					
86803	A	Hepatitis c ab test					
86804	A	Hep c ab test, confirm					
86805	A	Lymphocytotoxicity assay					
86806	A	Lymphocytotoxicity assay					
86807	A	Cytotoxic antibody screening					
86808	A	Cytotoxic antibody screening					
86812	A	HLA typing, A, B, or C					
86813	A	HLA typing, A, B, or C					
86816	A	HLA typing, DR/DQ					
86817	A	HLA typing, DR/DQ					
86821	A	Lymphocyte culture, mixed					
86822	A	Lymphocyte culture, primed					
86849	X	Immunology procedure	0349	0.48	$23.65	$4.73	$4.73

CPT codes and descriptions only are copyright American Medical Association. All Rights Reserved. Applicable FARS/DFARS Apply.
Copyright American Dental Association. All rights reserved.
*Code is new in 2001.

ADDENDUM B.—HOSPITAL OUTPATIENT DEPARTMENT (HOPD) PAYMENT STATUS BY HCPCS CODE AND RELATED INFORMATION—Continued

CPT/ HCPCS	HOPD Status Indicator	Description	APC	Relative Weight	Payment Rate	National Unadjusted Coinsurance	Minimum Unadjusted Coinsurance
86850	X	RBC antibody screen	0346	0.51	$25.49	$12.03	$5.10
86860	X	RBC antibody elution	0345	0.22	$10.92	$5.37	$2.18
86870	X	RBC antibody identification	0347	0.84	$41.90	$20.13	$8.38
86880	A	Coombs test					
86885	A	Coombs test					
86886	A	Coombs test					
86890	X	Autologous blood process	0347	0.84	$41.90	$20.13	$8.38
86891	X	Autologous blood, op salvage	0345	0.22	$10.92	$5.37	$2.18
86900	A	Blood typing, ABO					
86901	X	Blood typing, Rh (D)	0345	0.22	$10.92	$5.37	$2.18
86903	A	Blood typing, antigen screen					
86904	A	Blood typing, patient serum					
86905	A	Blood typing, RBC antigens					
86906	A	Blood typing, Rh phenotype					
86910	E	Blood typing, paternity test					
86911	E	Blood typing, antigen system					
86915	X	Bone marrow/stem cell prep	0347	0.84	$41.90	$20.13	$8.38
86920	X	Compatibility test	0346	0.51	$25.49	$12.03	$5.10
86921	X	Compatibility test	0346	0.51	$25.49	$12.03	$5.10
86922	X	Compatibility test	0346	0.51	$25.49	$12.03	$5.10
86927	X	Plasma, fresh frozen	0347	0.84	$41.90	$20.13	$8.38
86930	X	Frozen blood prep	0347	0.84	$41.90	$20.13	$8.38
86931	X	Frozen blood thaw	0347	0.84	$41.90	$20.13	$8.38
86932	X	Frozen blood freeze/thaw	0347	0.84	$41.90	$20.13	$8.38
86940	A	Hemolysins/agglutinins, auto					
86941	A	Hemolysins/agglutinins					
86945	X	Blood product/irradiation	0346	0.51	$25.49	$12.03	$5.10
86950	X	Leukacyte transfusion	0347	0.84	$41.90	$20.13	$8.38
86965	X	Pooling blood platelets	0346	0.51	$25.49	$12.03	$5.10
86970	X	RBC pretreatment	0345	0.22	$10.92	$5.37	$2.18
86971	X	RBC pretreatment	0346	0.51	$25.49	$12.03	$5.10
86972	X	RBC pretreatment	0345	0.22	$10.92	$5.37	$2.18
86975	X	RBC pretreatment, serum	0346	0.51	$25.49	$12.03	$5.10
86976	X	RBC pretreatment, serum	0347	0.84	$41.90	$20.13	$8.38
86977	X	RBC pretreatment, serum	0346	0.51	$25.49	$12.03	$5.10
86978	X	RBC pretreatment, serum	0345	0.22	$10.92	$5.37	$2.18
86985	X	Split blood or products	0347	0.84	$41.90	$20.13	$8.38
86999	X	Transfusion procedure	0346	0.51	$25.49	$12.03	$5.10
87001	A	Small animal inoculation					
87003	A	Small animal inoculation					
87015	A	Specimen concentration					
87040	A	Blood culture for bacteria					
87045	A	Stool culture for bacteria					
*87046	A	Stool culture for bacteria					
87060D	A	Nose/throat culture, bact					
87070	A	Culture specimen, bacteria					
*87071	A	Culture specimen, bacteria					
87072D	A	Culture of specimen by kit					
*87073	A	Culture specimen, bacteria					
87075	A	Culture specimen, bacteria					
87076	A	Bacteria identification					
*87077	A	Culture specimen, bacteria					
87081	A	Bacteria culture screen					
87082	A	Culture of specimen by kit					
87083D	A	Culture of specimen by kit					
87084	A	Culture of specimen by kit					
87085D	A	Culture of specimen by kit					
87086	A	Urine culture/colony count					
87087D	A	Urine bacteria culture					
87088	A	Urine bacteria culture					
87101	A	Skin fungus culture					
87102	A	Fungus isolation culture					
87103	A	Blood fungus culture					
87106	A	Fungus identification					
*87107	A	Culture specimen, fungi					
87109	A	Mycoplasma culture					
87110	A	Culture, chlamydia					
87116	A	Mycobacteria culture					
87117D	A	Mycobacteria culture					
87118	A	Mycobacteria identification					
87140	A	Culture typing, fluorescent					
87143	A	Culture typing, GLC method					
87145D	A	Culture typing, phage method					
87147	A	Culture typing, serologic					

CPT codes and descriptions only are copyright American Medical Association. All Rights Reserved. Applicable FARS/DFARS Apply.
Copyright American Dental Association. All rights reserved.
*Code is new in 2001.

ADDENDUM B.—HOSPITAL OUTPATIENT DEPARTMENT (HOPD) PAYMENT STATUS BY HCPCS CODE AND RELATED INFORMATION—Continued

CPT/ HCPCS	HOPD Status Indicator	Description	APC	Relative Weight	Payment Rate	National Unadjusted Coinsurance	Minimum Unadjusted Coinsurance
*87149	A	Culture typing					
87151D	A	Culture typing, serologic					
*87152	A	Culture typing					
87155D	A	Culture typing, precipitin					
87158	A	Culture typing, added method					
87163D	A	Special microbiology culture					
87164	A	Dark field examination					
87166	A	Dark field examination					
*87168	A	Macroscopic exam, arthropod					
*87169	A	Macroscopic exam, arthropod					
*87172	A	Pinworm exam					
87174D	A	Endotoxin, bacterial					
87175D	A	Assay, endotoxin, bacterial					
87176	A	Endotoxin, bacterial					
87177	A	Ova and parasites smears					
87181	A	Antibiotic sensitivity, each					
87184	A	Antibiotic sensitivity, each					
*87185	A	Susceptibility study					
87186	A	Antibiotic sensitivity, MIC					
87187	A	Antibiotic sensitivity, MBC					
87188	A	Antibiotic sensitivity, each					
87190	A	TB antibiotic sensitivity					
87192D	A	Antibiotic sensitivity, each					
87197	A	Bactericidal level, serum					
87205	A	Smear, stain & interpret					
87206	A	Smear, stain & interpret					
87207	A	Smear, stain & interpret					
87208D	A	Smear, stain & interpret					
87210	A	Smear, stain & interpret					
87211D	A	Smear, stain & interpret					
87220	A	Tissue exam for fungi					
87230	A	Assay, toxin or antitoxin					
87250	A	Virus inoculation for test					
87252	A	Virus inoculation for test					
87253	A	Virus inoculation for test					
*87254	A	Virus isolation					
87260	A	Adenovirus ag, dfa					
87265	A	Pertussis ag, dfa					
87270	A	Chylmd trach ag, dfa					
87272	A	Cryptosporidum ag, dfa					
*87273	A	Identify infectious agent					
87274	A	Herpes simplex ag, dfa					
*87275	A	Identify infectious agent					
87276	A	Influenza ag, dfa					
*87277	A	Identify infectious agent					
87278	A	Legion pneumo ag, dfa					
*87279	A	Identify infectious agent					
87280	A	Resp syncytial ag, dfa					
*87281	A	Identify infectious agent					
*87283	A	Identify infectious agent					
87285	A	Trepon pallidum ag, dfa					
87290	A	Varicella ag, dfa					
87299	A	Ag detection nos, dfa					
*87300	A	Identify infectious agent					
87301	A	Adenovirus ag, eia					
87320	A	Chylmd trach ag, eia					
87324	A	Clostridium ag, eia					
*87327	A	Identify infectious agent					
87328	A	Cryptospor ag, eia					
87332	A	Cytomegalovirus ag, eia					
87335	A	E coli 0157 ag, eia					
*87336	A	Identify infectious agent					
*87337	A	Identify infectious agent					
87338	A	Hpylori, stool, eia					
*87339	A	Identify infectious agent					
87340	A	Hepatitis b surface ag, eia					
*87341	A	Identify infectious agent					
87350	A	Hepatitis be ag, eia					
87380	A	Hepatitis delta ag, eia					
87385	A	Histoplasma capsul ag, eia					
87390	A	Hiv-1 ag, eia					
87391	A	Hiv-2 ag, eia					
*87400	A	Identify infectious agent					
87420	A	Resp syncytial ag, eia					

CPT codes and descriptions only are copyright American Medical Association. All Rights Reserved. Applicable FARS/DFARS Apply.
Copyright American Dental Association. All rights reserved.
*Code is new in 2001.

ADDENDUM B.—HOSPITAL OUTPATIENT DEPARTMENT (HOPD) PAYMENT STATUS BY HCPCS CODE AND RELATED INFORMATION—Continued

CPT/ HCPCS	HOPD Status Indicator	Description	APC	Relative Weight	Payment Rate	National Unadjusted Coinsurance	Minimum Unadjusted Coinsurance
87425	A	Rotavirus ag, eia					
*87427	A	Identify infectious agent					
87430	A	Strep a ag, eia					
87449	A	Ag detect nos, eia, mult					
87450	A	Ag detect nos, eia, single					
*87451	A	Identify infectious agent					
87470	A	Bartonella, dna, dir probe					
87471	A	Bartonella, dna, amp probe					
87472	A	Bartonella, dna, quant					
87475	A	Lyme dis, dna, dir probe					
87476	A	Lyme dis, dna, amp probe					
87477	A	Lyme dis, dna, quant					
87480	A	Candida, dna, dir probe					
87481	A	Candida, dna, amp probe					
87482	A	Candida, dna, quant					
87485	A	Chylmd pneum, dna, dir probe					
87486	A	Chylmd pneum, dna, amp probe					
87487	A	Chylmd pneum, dna, quant					
87490	A	Chylmd trach, dna, dir probe					
87491	A	Chylmd trach, dna, amp probe					
87492	A	Chylmd trach, dna, quant					
87495	A	Cytomeg, dna, dir probe					
87496	A	Cytomeg, dna, amp probe					
87497	A	Cytomeg, dna, quant					
87510	A	Gardner vag, dna, dir probe					
87511	A	Gardner vag, dna, amp probe					
87512	A	Gardner vag, dna, quant					
87515	A	Hepatitis b, dna, dir probe					
87516	A	Hepatitis b , dna, amp probe					
87517	A	Hepatitis b , dna, quant					
87520	A	Hepatitis c , rna, dir probe					
87521	A	Hepatitis c , rna, amp probe					
87522	A	Hepatitis c, rna, quant					
87525	A	Hepatitis g , dna, dir probe					
87526	A	Hepatitis g, dna, amp probe					
87527	A	Hepatitis g, dna, quant					
87528	A	Hsv, dna, dir probe					
87529	A	Hsv, dna, amp probe					
87530	A	Hsv, dna, quant					
87531	A	Hhv-6, dna, dir probe					
87532	A	Hhv-6, dna, amp probe					
87533	A	Hhv-6, dna, quant					
87534	A	Hiv-1, dna, dir probe					
87535	A	Hiv-1, dna, amp probe					
87536	A	Hiv-1, dna, quant					
87537	A	Hiv-2, dna, dir probe					
87538	A	Hiv-2, dna, amp probe					
87539	A	Hiv-2, dna, quant					
87540	A	Legion pneumo, dna, dir prob					
87541	A	Legion pneumo, dna, amp prob					
87542	A	Legion pneumo, dna, quant					
87550	A	Mycobacteria, dna, dir probe					
87551	A	Mycobacteria, dna, amp probe					
87552	A	Mycobacteria, dna, quant					
87555	A	M.tuberculo, dna, dir probe					
87556	A	M.tuberculo, dna, amp probe					
87557	A	M.tuberculo, dna, quant					
87560	A	M.avium-intra, dna, dir prob					
87561	A	M.avium-intra, dna, amp prob					
87562	A	M.avium-intra, dna, quant					
87580	A	M.pneumon, dna, dir probe					
87581	A	M.pneumon, dna, amp probe					
87582	A	M.pneumon, dna, quant					
87590	A	N.gonorrhoeae, dna, dir prob					
87591	A	N.gonorrhoeae, dna, amp prob					
87592	A	N.gonorrhoeae, dna, quant					
87620	A	Hpv, dna, dir probe					
87621	A	Hpv, dna, amp probe					
87622	A	Hpv, dna, quant					
87650	A	Strep a, dna, dir probe					
87651	A	Strep a, dna, amp probe					
87652	A	Strep a, dna, quant					
87797	A	Detect agent nos, dna, dir					
87798	A	Detect agent nos, dna, amp					

CPT codes and descriptions only are copyright American Medical Association. All Rights Reserved. Applicable FARS/DFARS Apply.
Copyright American Dental Association. All rights reserved.
*Code is new in 2001.

ADDENDUM B.—HOSPITAL OUTPATIENT DEPARTMENT (HOPD) PAYMENT STATUS BY HCPCS CODE AND RELATED INFORMATION—Continued

CPT/ HCPCS	HOPD Status Indicator	Description	APC	Relative Weight	Payment Rate	National Unadjusted Coinsurance	Minimum Unadjusted Coinsurance
87799	A	Detect agent nos, dna, quant					
*87800	A	Identify infectious agent					
*87801	A	Identify infectious agent					
87810	A	Chylmd trach assay w/optic					
87850	A	N. gonorrhoeae assay w/optic					
87880	A	Strep a assay w/optic					
87899	A	Agent nos assay w/optic					
*87901	A	Infectious agent genotype					
*87903	A	Infectious agent phenotype					
*87904	A	Infectious agent phenotype					
87999	X	Microbiology procedure	0349	0.48	$23.65	$4.73	$4.73
88000	E	Autopsy (necropsy), gross					
88005	E	Autopsy (necropsy), gross					
88007	E	Autopsy (necropsy), gross					
88012	E	Autopsy (necropsy), gross					
88014	E	Autopsy (necropsy), gross					
88016	E	Autopsy (necropsy), gross					
88020	E	Autopsy (necropsy), complete					
88025	E	Autopsy (necropsy), complete					
88027	E	Autopsy (necropsy), complete					
88028	E	Autopsy (necropsy), complete					
88029	E	Autopsy (necropsy), complete					
88036	E	Limited autopsy					
88037	E	Limited autopsy					
88040	E	Forensic autopsy (necropsy)					
88045	E	Coroner's autopsy (necropsy)					
88099	E	Necropsy (autopsy) procedure					
88104	X	Cytopathology, fluids	0343	0.45	$22.32	$12.16	$4.46
88106	X	Cytopathology, fluids	0343	0.45	$22.32	$12.16	$4.46
88107	X	Cytopathology, fluids	0343	0.45	$22.32	$12.16	$4.46
88108	X	Cytopath, concentrate tech	0343	0.45	$22.32	$12.16	$4.46
88125	X	Forensic cytopathology	0343	0.45	$22.32	$12.16	$4.46
88130	A	Sex chromatin identification					
88140	A	Sex chromatin identification					
88141	N	Cytopath, c/v, interpret					
88142	A	Cytopath, c/v, thin layer					
88143	A	Cytopath c/v thin layer redo					
88144	A	Cytopath, c/v thin lyr redo					
88145	A	Cytopath, c/v thin lyr sel					
88147	A	Cytopath, c/v, automated					
88148	A	Cytopath, c/v, auto rescreen					
88150	A	Cytopath, c/v, manual					
88152	A	Cytopath, c/v, auto redo					
88153	A	Cytopath, c/v, redo					
88154	A	Cytopath, c/v, select					
88155	A	Cytopath, c/v, index add-on					
88160	X	Cytopath smear, other source	0342	0.26	$12.90	$8.03	$2.58
88161	X	Cytopath smear, other source	0343	0.45	$22.32	$12.16	$4.46
88162	X	Cytopath smear, other source	0343	0.45	$22.32	$12.16	$4.46
88164	A	Cytopath tbs, c/v, manual					
88165	A	Cytopath tbs, c/v, redo					
88166	A	Cytopath tbs, c/v, auto redo					
88167	A	Cytopath tbs, c/v, select					
88170	T	Fine needle aspiration	0002	0.62	$30.75	$17.66	$6.15
88171	T	Fine needle aspiration	0002	0.62	$30.75	$17.66	$6.15
88172	X	Evaluation of smear	0343	0.45	$22.32	$12.16	$4.46
88173	X	Interpretation of smear	0343	0.45	$22.32	$12.16	$4.46
88180	X	Cell marker study	0344	0.79	$39.18	$23.63	$7.84
88182	X	Cell marker study	0344	0.79	$39.18	$23.63	$7.84
88199	X	Cytopathology procedure	0349	0.48	$23.65	$4.73	$4.73
88230	A	Tissue culture, lymphocyte					
88233	A	Tissue culture, skin/biopsy					
88235	A	Tissue culture, placenta					
88237	A	Tissue culture, bone marrow					
88239	A	Tissue culture, tumor					
88240	A	Cell cryopreserve/storage					
88241	A	Frozen cell preparation					
88245	A	Chromosome analysis, 20-25					
88248	A	Chromosome analysis, 50-100					
88249	A	Chromosome analysis, 100					
88261	A	Chromosome analysis, 5					
88262	A	Chromosome analysis, 15-20					
88263	A	Chromosome analysis, 45					
88264	A	Chromosome analysis, 20-25					

CPT codes and descriptions only are copyright American Medical Association. All Rights Reserved. Applicable FARS/DFARS Apply.
Copyright American Dental Association. All rights reserved.
*Code is new in 2001.

ADDENDUM B.—HOSPITAL OUTPATIENT DEPARTMENT (HOPD) PAYMENT STATUS BY HCPCS CODE AND RELATED INFORMATION—Continued

CPT/ HCPCS	HOPD Status Indicator	Description	APC	Relative Weight	Payment Rate	National Unadjusted Coinsurance	Minimum Unadjusted Coinsurance
88267	A	Chromosome analys, placenta					
88269	A	Chromosome analys, amniotic					
88271	A	Cytogenetics, dna probe					
88272	A	Cytogenetics, 3-5					
88273	A	Cytogenetics, 10-30					
88274	A	Cytogenetics, 25-99					
88275	A	Cytogenetics, 100-300					
88280	A	Chromosome karyotype study					
88283	A	Chromosome banding study					
88285	A	Chromosome count, additional					
88289	A	Chromosome study, additional					
88291	A	Cyto/molecular report					
88299	X	Cytogenetic study	0342	0.26	$12.90	$8.03	$2.58
88300	X	Surgical path, gross	0342	0.26	$12.90	$8.03	$2.58
88302	X	Tissue exam by pathologist	0342	0.26	$12.90	$8.03	$2.58
88304	X	Tissue exam by pathologist	0343	0.45	$22.32	$12.16	$4.46
88305	X	Tissue exam by pathologist	0343	0.45	$22.32	$12.16	$4.46
88307	X	Tissue exam by pathologist	0344	0.79	$39.18	$23.63	$7.84
88309	X	Tissue exam by pathologist	0344	0.79	$39.18	$23.63	$7.84
88311	X	Decalcify tissue	0342	0.26	$12.90	$8.03	$2.58
88312	X	Special stains	0343	0.45	$22.32	$12.16	$4.46
88313	X	Special stains	0342	0.26	$12.90	$8.03	$2.58
88314	X	Histochemical stain	0343	0.45	$22.32	$12.16	$4.46
88318	X	Chemical histochemistry	0343	0.45	$22.32	$12.16	$4.46
88319	X	Enzyme histochemistry	0342	0.26	$12.90	$8.03	$2.58
88321	X	Microslide consultation	0342	0.26	$12.90	$8.03	$2.58
88323	X	Microslide consultation	0343	0.45	$22.32	$12.16	$4.46
88325	X	Comprehensive review of data	0343	0.45	$22.32	$12.16	$4.46
88329	X	Pathology consult in surgery	0343	0.45	$22.32	$12.16	$4.46
88331	X	Pathology consult in surgery	0343	0.45	$22.32	$12.16	$4.46
88332	X	Pathology consult in surgery	0343	0.45	$22.32	$12.16	$4.46
88342	X	Immunocytochemistry	0344	0.79	$39.18	$23.63	$7.84
88346	X	Immunofluorescent study	0343	0.45	$22.32	$12.16	$4.46
88347	X	Immunofluorescent study	0344	0.79	$39.18	$23.63	$7.84
88348	X	Electron microscopy	0344	0.79	$39.18	$23.63	$7.84
88349	X	Scanning electron microscopy	0344	0.79	$39.18	$23.63	$7.84
88355	X	Analysis, skeletal muscle	0344	0.79	$39.18	$23.63	$7.84
88356	X	Analysis, nerve	0344	0.79	$39.18	$23.63	$7.84
88358	X	Analysis, tumor	0344	0.79	$39.18	$23.63	$7.84
88362	X	Nerve teasing preparations	0343	0.45	$22.32	$12.16	$4.46
88365	X	Tissue hybridization	0344	0.79	$39.18	$23.63	$7.84
88371	A	Protein, western blot tissue					
88372	A	Protein analysis w/probe					
88399	X	Surgical pathology procedure	0349	0.48	$23.65	$4.73	$4.73
*88400	A	Bilirubin total, trascutaneous					
89050	A	Body fluid cell count					
89051	A	Body fluid cell count					
89060	A	Exam,synovial fluid crystals					
89100	X	Sample intestinal contents	0361	3.53	$175.07	$88.09	$35.01
89105	X	Sample intestinal contents	0360	1.38	$68.44	$34.75	$13.69
89125	A	Specimen fat stain					
89130	X	Sample stomach contents	0360	1.38	$68.44	$34.75	$13.69
89132	X	Sample stomach contents	0360	1.38	$68.44	$34.75	$13.69
89135	X	Sample stomach contents	0360	1.38	$68.44	$34.75	$13.69
89136	X	Sample stomach contents	0360	1.38	$68.44	$34.75	$13.69
89140	X	Sample stomach contents	0360	1.38	$68.44	$34.75	$13.69
89141	X	Sample stomach contents	0361	3.53	$175.07	$88.09	$35.01
89160	A	Exam feces for meat fibers					
89190	A	Nasal smear for eosinophils					
89250	X	Fertilization of oocyte	0348	0.52	$25.57	$5.11	$5.11
89251	X	Culture oocyte w/embryos	0348	0.52	$25.57	$5.11	$5.11
89252	X	Assist oocyte fertilization	0348	0.52	$25.57	$5.11	$5.11
89253	X	Embryo hatching	0348	0.52	$25.57	$5.11	$5.11
89254	X	Oocyte identification	0348	0.52	$25.57	$5.11	$5.11
89255	X	Prepare embryo for transfer	0348	0.52	$25.57	$5.11	$5.11
89256	X	Prepare cryopreserved embryo	0348	0.52	$25.57	$5.11	$5.11
89257	X	Sperm identification	0348	0.52	$25.57	$5.11	$5.11
89258	X	Cryopreservation, embryo	0348	0.52	$25.57	$5.11	$5.11
89259	X	Cryopreservation, sperm	0348	0.52	$25.57	$5.11	$5.11
89260	X	Sperm isolation, simple	0348	0.52	$25.57	$5.11	$5.11
89261	X	Sperm isolation, complex	0348	0.52	$25.57	$5.11	$5.11
89264	X	Identify sperm tissue	0348	0.52	$25.57	$5.11	$5.11
89300	A	Semen analysis					
89310	A	Semen analysis					

CPT codes and descriptions only are copyright American Medical Association. All Rights Reserved. Applicable FARS/DFARS Apply.
Copyright American Dental Association. All rights reserved.
*Code is new in 2001.

ADDENDUM B.—HOSPITAL OUTPATIENT DEPARTMENT (HOPD) PAYMENT STATUS BY HCPCS CODE AND RELATED INFORMATION—Continued

CPT/ HCPCS	HOPD Status Indicator	Description	APC	Relative Weight	Payment Rate	National Unadjusted Coinsurance	Minimum Unadjusted Coinsurance
89320	A	Semen analysis					
*89321	A	Semen analysis					
89325	A	Sperm antibody test					
89329	A	Sperm evaluation test					
89330	A	Evaluation, cervical mucus					
89350	X	Sputum specimen collection	0344	0.79	$39.18	$23.63	$7.84
89355	A	Exam feces for starch					
89360	X	Collect sweat for test	0344	0.79	$39.18	$23.63	$7.84
89365	A	Water load test					
89399	X	Pathology lab procedure	0349	0.48	$23.65	$4.73	$4.73
90281	E	Human ig, im					
90283	E	Human ig, iv					
90287	E	Botulinum antitoxin					
90288	E	Botulism ig, iv					
90291	E	Cmv ig, iv					
90296	K	Diphtheria antitoxin	0356	0.36	$17.86	$4.82	$3.57
90371	K	Hep b ig, im	0356	0.36	$17.86	$4.82	$3.57
90375	K	Rabies ig, im/sc	0356	0.36	$17.86	$4.82	$3.57
90376	K	Rabies ig, heat treated	0356	0.36	$17.86	$4.82	$3.57
90378	K	Rsv ig, im	0356	0.36	$17.86	$4.82	$3.57
90379	K	Rsv ig, iv	0356	0.36	$17.86	$4.82	$3.57
90384	E	Rh ig, full-dose, im					
90385	K	Rh ig, minidose, im	0356	0.36	$17.86	$4.82	$3.57
90386	E	Rh ig, iv					
90389	K	Tetanus ig, im	0356	0.36	$17.86	$4.82	$3.57
90393	K	Vaccina ig, im	0356	0.36	$17.86	$4.82	$3.57
90396	K	Varicella-zoster ig, im	0356	0.36	$17.86	$4.82	$3.57
90399	E	Immune globulin					
90471	N	Immunization admin					
90472	N	Immunization admin, each add					
90476	K	Adenovirus vaccine, type 4	0356	0.36	$17.86	$4.82	$3.57
90477	K	Adenovirus vaccine, type 7	0356	0.36	$17.86	$4.82	$3.57
90581	K	Anthrax vaccine, sc	0356	0.36	$17.86	$4.82	$3.57
90585	K	Bcg vaccine, percut	0356	0.36	$17.86	$4.82	$3.57
90586	K	Bcg vaccine, intravesical	0356	0.36	$17.86	$4.82	$3.57
90632	K	Hep a vaccine, adult im	0356	0.36	$17.86	$4.82	$3.57
90633	K	Hep a vacc, ped/adol, 2 dose	0356	0.36	$17.86	$4.82	$3.57
90634	K	Hep a vacc, ped/adol, 3 dose	0356	0.36	$17.86	$4.82	$3.57
90636	K	Hep a/hep b vacc, adult im	0356	0.36	$17.86	$4.82	$3.57
90645	K	Hib vaccine, hboc, im	0355	0.19	$9.42	$5.05	$1.88
90646	K	Hib vaccine, prp-d, im	0355	0.19	$9.42	$5.05	$1.88
90647	K	Hib vaccine, prp-omp, im	0355	0.19	$9.42	$5.05	$1.88
90648	K	Hib vaccine, prp-t, im	0355	0.19	$9.42	$5.05	$1.88
90657	K	Flu vaccine, 6-35 mo, im	0354	0.13	$6.33		
90658	K	Flu vaccine, 3 yrs, im	0354	0.13	$6.33		
90659	K	Flu vaccine, whole, im	0354	0.13	$6.33		
90660	K	Flu vaccine, nasal	0354	0.13	$6.33		
90665	K	Lyme disease vaccine, im	0356	0.36	$17.86	$4.82	$3.57
90669	K	Pneumococcal vaccine, ped	0356	0.36	$17.86	$4.82	$3.57
90675	K	Rabies vaccine, im	0356	0.36	$17.86	$4.82	$3.57
90676	K	Rabies vaccine, id	0356	0.36	$17.86	$4.82	$3.57
90680	K	Rotovirus vaccine, oral	0356	0.36	$17.86	$4.82	$3.57
90690	K	Typhoid vaccine, oral	0356	0.36	$17.86	$4.82	$3.57
90691	K	Typhoid vaccine, im	0356	0.36	$17.86	$4.82	$3.57
90692	K	Typhoid vaccine, h-p, sc/id	0356	0.36	$17.86	$4.82	$3.57
90693	K	Typhoid vaccine, akd, sc	0356	0.36	$17.86	$4.82	$3.57
90700	K	Dtap vaccine, im	0355	0.19	$9.42	$5.05	$1.88
90701	K	Dtp vaccine, im	0356	0.36	$17.86	$4.82	$3.57
90702	K	Dt vaccine, im	0355	0.19	$9.42	$5.05	$1.88
90703	K	Tetanus vaccine, im	0356	0.36	$17.86	$4.82	$3.57
90704	K	Mumps vaccine, sc	0355	0.19	$9.42	$5.05	$1.88
90705	K	Measles vaccine, sc	0356	0.36	$17.86	$4.82	$3.57
90706	K	Rubella vaccine, sc	0356	0.36	$17.86	$4.82	$3.57
90707	K	Mmr vaccine, sc	0356	0.36	$17.86	$4.82	$3.57
90708	K	Measles-rubella vaccine, sc	0356	0.36	$17.86	$4.82	$3.57
90709	K	Rubella & mumps vaccine, sc	0356	0.36	$17.86	$4.82	$3.57
90710	K	Mmrv vaccine, sc	0356	0.36	$17.86	$4.82	$3.57
90712	K	Oral poliovirus vaccine	0356	0.36	$17.86	$4.82	$3.57
90713	K	Poliovirus, ipv, sc	0355	0.19	$9.42	$5.05	$1.88
90716	K	Chicken pox vaccine, sc	0355	0.19	$9.42	$5.05	$1.88
90717	K	Yellow fever vaccine, sc	0356	0.36	$17.86	$4.82	$3.57
90718	K	Td vaccine, im	0356	0.36	$17.86	$4.82	$3.57
90719	K	Diphtheria vaccine, im	0356	0.36	$17.86	$4.82	$3.57
90720	K	Dtp/hib vaccine, im	0355	0.19	$9.42	$5.05	$1.88

CPT codes and descriptions only are copyright American Medical Association. All Rights Reserved. Applicable FARS/DFARS Apply.
Copyright American Dental Association. All rights reserved.
*Code is new in 2001.

ADDENDUM B.—HOSPITAL OUTPATIENT DEPARTMENT (HOPD) PAYMENT STATUS BY HCPCS CODE AND RELATED INFORMATION—Continued

CPT/ HCPCS	HOPD Status Indicator	Description	APC	Relative Weight	Payment Rate	National Unadjusted Coinsurance	Minimum Unadjusted Coinsurance
90721	K	Dtap/hib vaccine, im	0355	0.19	$9.42	$5.05	$1.88
*90723	K	DTAP-HepB-IPV vaccine	0356	0.36	$17.86	$4.82	$3.57
90725	K	Cholera vaccine, injectable	0356	0.36	$17.86	$4.82	$3.57
90727	K	Plague vaccine, im	0355	0.19	$9.42	$5.05	$1.88
90732	K	Pneumococcal vaccine, adult	0354	0.13	$6.33		
90733	K	Meningococcal vaccine, sc	0356	0.36	$17.86	$4.82	$3.57
90735	K	Encephalitis vaccine, sc	0356	0.36	$17.86	$4.82	$3.57
*90740	K	Hep B vaccine, 3 dose sched	0356	0.36	$17.86	$4.82	$3.57
*90743	K	Hep B vaccine, 2 dose sched	0356	0.36	$17.86	$4.82	$3.57
90744	K	Hep b vaccine, ped/adol, im	0356	0.36	$17.86	$4.82	$3.57
90746	K	Hep b vaccine, adult, im	0356	0.36	$17.86	$4.82	$3.57
90747	K	Hep b vaccine, ill pat, im	0356	0.36	$17.86	$4.82	$3.57
90748	K	Hep b/hib vaccine, im	0356	0.36	$17.86	$4.82	$3.57
90749	K	Vaccine toxoid	0355	0.19	$9.42	$5.05	$1.88
90780	E	IV infusion therapy, 1 hour					
90781	E	IV infusion, additional hour					
90782	X	Injection, sc/im	0359	0.96	$47.61	$9.52	$9.52
90783	X	Injection, ia	0359	0.96	$47.61	$9.52	$9.52
90784	X	Injection, iv	0359	0.96	$47.61	$9.52	$9.52
90788	X	Injection of antibiotic	0359	0.96	$47.61	$9.52	$9.52
90799	X	Ther/prophylactic/dx inject	0359	0.96	$47.61	$9.52	$9.52
90801	S	Psy dx interview	0323	1.85	$91.75	$22.48	$18.35
90802	S	Intac psy dx interview	0323	1.85	$91.75	$22.48	$18.35
90804	S	Psytx, office, 20-30 min	0322	1.32	$65.46	$14.22	$13.09
90805	S	Psytx, off, 20-30 min w/e&m	0322	1.32	$65.46	$14.22	$13.09
90806	S	Psytx, off, 45-50 min	0323	1.85	$91.75	$22.48	$18.35
90807	S	Psytx, off, 45-50 min w/e&m	0323	1.85	$91.75	$22.48	$18.35
90808	S	Psytx, office, 75-80 min	0323	1.85	$91.75	$22.48	$18.35
90809	S	Psytx, off, 75-80, w/e&m	0323	1.85	$91.75	$22.48	$18.35
90810	S	Intac psytx, off, 20-30 min	0322	1.32	$65.46	$14.22	$13.09
90811	S	Intac psytx, 20-30, w/e&m	0322	1.32	$65.46	$14.22	$13.09
90812	S	Intac psytx, off, 45-50 min	0323	1.85	$91.75	$22.48	$18.35
90813	S	Intac psytx, 45-50 min w/e&m	0323	1.85	$91.75	$22.48	$18.35
90814	S	Intac psytx, off, 75-80 min	0323	1.85	$91.75	$22.48	$18.35
90815	S	Intac psytx, 75-80 w/e&m	0323	1.85	$91.75	$22.48	$18.35
90816	S	Psytx, hosp, 20-30 min	0322	1.32	$65.46	$14.22	$13.09
90817	S	Psytx, hosp, 20-30 min w/e&m	0322	1.32	$65.46	$14.22	$13.09
90818	S	Psytx, hosp, 45-50 min	0323	1.85	$91.75	$22.48	$18.35
90819	S	Psytx, hosp, 45-50 min w/e&m	0323	1.85	$91.75	$22.48	$18.35
90821	S	Psytx, hosp, 75-80 min	0323	1.85	$91.75	$22.48	$18.35
90822	S	Psytx, hosp, 75-80 min w/e&m	0323	1.85	$91.75	$22.48	$18.35
90823	S	Intac psytx, hosp, 20-30 min	0322	1.32	$65.46	$14.22	$13.09
90824	S	Intac psytx, hsp 20-30 w/e&m	0322	1.32	$65.46	$14.22	$13.09
90826	S	Intac psytx, hosp, 45-50 min	0323	1.85	$91.75	$22.48	$18.35
90827	S	Intac psytx, hsp 45-50 w/e&m	0323	1.85	$91.75	$22.48	$18.35
90828	S	Intac psytx, hosp, 75-80 min	0323	1.85	$91.75	$22.48	$18.35
90829	S	Intac psytx, hsp 75-80 w/e&m	0323	1.85	$91.75	$22.48	$18.35
90845	S	Psychoanalysis	0323	1.85	$91.75	$22.48	$18.35
90846	S	Family psytx w/o patient	0324	1.87	$92.74	$20.19	$18.55
90847	S	Family psytx w/patient	0324	1.87	$92.74	$20.19	$18.55
90849	S	Multiple family group psytx	0325	1.55	$76.88	$19.96	$15.38
90853	S	Group psychotherapy	0325	1.55	$76.88	$19.96	$15.38
90857	S	Intac group psytx	0325	1.55	$76.88	$19.96	$15.38
90862	X	Medication management	0374	1.17	$58.03	$13.08	$11.61
90865	S	Narcosynthesis	0323	1.85	$91.75	$22.48	$18.35
90870	S	Electroconvulsive therapy	0320	3.68	$182.51	$80.06	$36.50
90871	S	Electroconvulsive therapy	0320	3.68	$182.51	$80.06	$36.50
90875	E	Psychophysiological therapy					
90876	E	Psychophysiological therapy					
90880	S	Hypnotherapy	0323	1.85	$91.75	$22.48	$18.35
90882	E	Environmental manipulation					
90885	N	Psy evaluation of records					
90887	N	Consultation with family					
90889	N	Preparation of report					
90899	S	Psychiatric service/therapy	0322	1.32	$65.46	$14.22	$13.09
90901	S	Biofeedback train, any meth	0321	1.26	$62.49	$29.25	$12.50
90911	S	Biofeedback peri/uro/rectal	0321	1.26	$62.49	$29.25	$12.50
90918	A	ESRD related services, month					
90919	A	ESRD related services, month					
90920	A	ESRD related services, month					
90921	A	ESRD related services, month					
90922	A	ESRD related services, day					
90923	A	Esrd related services, day					
90924	A	Esrd related services, day					

CPT codes and descriptions only are copyright American Medical Association. All Rights Reserved. Applicable FARS/DFARS Apply.
Copyright American Dental Association. All rights reserved.
*Code is new in 2001.

ADDENDUM B.—HOSPITAL OUTPATIENT DEPARTMENT (HOPD) PAYMENT STATUS BY HCPCS CODE AND RELATED INFORMATION—Continued

CPT/ HCPCS	HOPD Status Indicator	Description	APC	Relative Weight	Payment Rate	National Unadjusted Coinsurance	Minimum Unadjusted Coinsurance
90925	A	Esrd related services, day					
90935	S	Hemodialysis, one evaluation	0170	6.68	$331.30	$72.26	$66.26
90937	E	Hemodialysis, repeated eval					
*90940	N	Hemodyalysis access study					
90945	S	Dialysis, one evaluation	0170	6.68	$331.30	$72.26	$66.26
90947	E	Dialysis, repeated eval					
90989	E	Dialysis training, complete					
90993	E	Dialysis training, incompl					
90997	E	Hemoperfusion					
90999	E	Dialysis procedure					
91000	X	Esophageal intubation	0361	3.53	$175.07	$88.09	$35.01
91010	X	Esophagus motility study	0361	3.53	$175.07	$88.09	$35.01
91011	X	Esophagus motility study	0361	3.53	$175.07	$88.09	$35.01
91012	X	Esophagus motility study	0361	3.53	$175.07	$88.09	$35.01
91020	X	Gastric motility	0361	3.53	$175.07	$88.09	$35.01
91030	X	Acid perfusion of esophagus	0360	1.38	$68.44	$34.75	$13.69
91032	X	Esophagus, acid reflux test	0361	3.53	$175.07	$88.09	$35.01
91033	X	Prolonged acid reflux test	0361	3.53	$175.07	$88.09	$35.01
91052	X	Gastric analysis test	0361	3.53	$175.07	$88.09	$35.01
91055	X	Gastric intubation for smear	0360	1.38	$68.44	$34.75	$13.69
91060	X	Gastric saline load test	0361	3.53	$175.07	$88.09	$35.01
91065	X	Breath hydrogen test	0360	1.38	$68.44	$34.75	$13.69
91100	X	Pass intestine bleeding tube	0360	1.38	$68.44	$34.75	$13.69
91105	X	Gastric intubation treatment	0360	1.38	$68.44	$34.75	$13.69
91122	T	Anal pressure record	0165	3.89	$192.92	$91.76	$38.58
*91132	X	Electrogastrography	0360	1.38	$68.44	$34.75	$13.69
*91133	X	Electrogastrography	0360	1.38	$68.44	$34.75	$13.69
91299	X	Gastroenterology procedure	0360	1.38	$68.44	$34.75	$13.69
92002	V	Eye exam, new patient	0601	1.00	$49.60	$9.92	$9.92
92004	V	Eye exam, new patient	0602	1.66	$82.33	$16.47	$16.47
92012	V	Eye exam established pat	0601	1.00	$49.60	$9.92	$9.92
92014	V	Eye exam & treatment	0602	1.66	$82.33	$16.47	$16.47
92015	E	Refraction					
92018	S	New eye exam & treatment	0231	2.64	$130.94	$59.87	$26.19
92019	S	Eye exam & treatment	0231	2.64	$130.94	$59.87	$26.19
92020	S	Special eye evaluation	0230	0.98	$48.61	$22.48	$9.72
92060	S	Special eye evaluation	0230	0.98	$48.61	$22.48	$9.72
92065	S	Orthoptic/pleoptic training	0230	0.98	$48.61	$22.48	$9.72
92070	N	Fitting of contact lens					
92081	S	Visual field examination(s)	0230	0.98	$48.61	$22.48	$9.72
92082	S	Visual field examination(s)	0230	0.98	$48.61	$22.48	$9.72
92083	S	Visual field examination(s)	0230	0.98	$48.61	$22.48	$9.72
92100	N	Serial tonometry exam(s)					
92120	S	Tonography & eye evaluation	0230	0.98	$48.61	$22.48	$9.72
92130	S	Water provocation tonography	0230	0.98	$48.61	$22.48	$9.72
92135	S	Opthalmic dx imaging	0231	2.64	$130.94	$59.87	$26.19
92140	S	Glaucoma provocative tests	0231	2.64	$130.94	$59.87	$26.19
92225	S	Special eye exam, initial	0230	0.98	$48.61	$22.48	$9.72
92226	S	Special eye exam, subsequent	0231	2.64	$130.94	$59.87	$26.19
92230	S	Eye exam with photos	0231	2.64	$130.94	$59.87	$26.19
92235	S	Eye exam with photos	0231	2.64	$130.94	$59.87	$26.19
92240	S	Icg angiography	0231	2.64	$130.94	$59.87	$26.19
92250	S	Eye exam with photos	0230	0.98	$48.61	$22.48	$9.72
92260	S	Ophthalmoscopy/dynamometry	0230	0.98	$48.61	$22.48	$9.72
92265	S	Eye muscle evaluation	0230	0.98	$48.61	$22.48	$9.72
92270	S	Electro-oculography	0230	0.98	$48.61	$22.48	$9.72
92275	S	Electroretinography	0216	2.87	$142.34	$64.69	$28.47
92283	S	Color vision examination	0230	0.98	$48.61	$22.48	$9.72
92284	S	Dark adaptation eye exam	0231	2.64	$130.94	$59.87	$26.19
92285	S	Eye photography	0230	0.98	$48.61	$22.48	$9.72
92286	S	Internal eye photography	0231	2.64	$130.94	$59.87	$26.19
92287	S	Internal eye photography	0231	2.64	$130.94	$59.87	$26.19
92310	E	Contact lens fitting					
92311	X	Contact lens fitting	0362	0.51	$25.30	$9.63	$5.06
92312	X	Contact lens fitting	0362	0.51	$25.30	$9.63	$5.06
92313	X	Contact lens fitting	0362	0.51	$25.30	$9.63	$5.06
92314	E	Prescription of contact lens					
92315	X	Prescription of contact lens	0362	0.51	$25.30	$9.63	$5.06
92316	X	Prescription of contact lens	0362	0.51	$25.30	$9.63	$5.06
92317	X	Prescription of contact lens	0362	0.51	$25.30	$9.63	$5.06
92325	X	Modification of contact lens	0362	0.51	$25.30	$9.63	$5.06
92326	X	Replacement of contact lens	0362	0.51	$25.30	$9.63	$5.06
92330	S	Fitting of artificial eye	0230	0.98	$48.61	$22.48	$9.72
92335	N	Fitting of artificial eye					

CPT codes and descriptions only are copyright American Medical Association. All Rights Reserved. Applicable FARS/DFARS Apply.
Copyright American Dental Association. All rights reserved.
*Code is new in 2001.

ADDENDUM B.—HOSPITAL OUTPATIENT DEPARTMENT (HOPD) PAYMENT STATUS BY HCPCS CODE AND RELATED INFORMATION—Continued

CPT/ HCPCS	HOPD Status Indicator	Description	APC	Relative Weight	Payment Rate	National Unadjusted Coinsurance	Minimum Unadjusted Coinsurance
92340	E	Fitting of spectacles					
92341	E	Fitting of spectacles					
92342	E	Fitting of spectacles					
92352	X	Special spectacles fitting	0362	0.51	$25.30	$9.63	$5.06
92353	X	Special spectacles fitting	0362	0.51	$25.30	$9.63	$5.06
92354	X	Special spectacles fitting	0362	0.51	$25.30	$9.63	$5.06
92355	X	Special spectacles fitting	0362	0.51	$25.30	$9.63	$5.06
92358	X	Eye prosthesis service	0362	0.51	$25.30	$9.63	$5.06
92370	E	Repair & adjust spectacles					
92371	X	Repair & adjust spectacles	0362	0.51	$25.30	$9.63	$5.06
92390	E	Supply of spectacles					
92391	E	Supply of contact lenses					
92392	E	Supply of low vision aids					
92393	E	Supply of artificial eye					
92395	E	Supply of spectacles					
92396	E	Supply of contact lenses					
92499	S	Eye service or procedure	0230	0.98	$48.61	$22.48	$9.72
92502	T	Ear and throat examination	0251	1.68	$83.32	$27.99	$16.66
92504	N	Ear microscopy examination					
92506	A	Speech/hearing evaluation					
92507	A	Speech/hearing therapy					
92508	A	Speech/hearing therapy					
92510	A	Rehab for ear implant					
92511	T	Nasopharyngoscopy	0071	0.55	$27.28	$14.22	$5.46
92512	X	Nasal function studies	0363	2.83	$140.36	$53.22	$28.07
92516	X	Facial nerve function test	0363	2.83	$140.36	$53.22	$28.07
92520	X	Laryngeal function studies	0363	2.83	$140.36	$53.22	$28.07
92525	E	Oral function evaluation					
92526	A	Oral function therapy					
92531	N	Spontaneous nystagmus study					
92532	N	Positional nystagmus study					
92533	N	Caloric vestibular test					
92534	N	Optokinetic nystagmus					
92541	X	Spontaneous nystagmus test	0363	2.83	$140.36	$53.22	$28.07
92542	X	Positional nystagmus test	0363	2.83	$140.36	$53.22	$28.07
92543	X	Caloric vestibular test	0363	2.83	$140.36	$53.22	$28.07
92544	X	Optokinetic nystagmus test	0363	2.83	$140.36	$53.22	$28.07
92545	X	Oscillating tracking test	0363	2.83	$140.36	$53.22	$28.07
92546	X	Sinusoidal rotational test	0363	2.83	$140.36	$53.22	$28.07
92547	X	Supplemental electrical test	0363	2.83	$140.36	$53.22	$28.07
92548	X	Posturography	0363	2.83	$140.36	$53.22	$28.07
92551	E	Pure tone hearing test, air					
92552	X	Pure tone audiometry, air	0364	0.68	$33.72	$13.31	$6.74
92553	X	Audiometry, air & bone	0364	0.68	$33.72	$13.31	$6.74
92555	X	Speech threshold audiometry	0364	0.68	$33.72	$13.31	$6.74
92556	X	Speech audiometry, complete	0364	0.68	$33.72	$13.31	$6.74
92557	X	Comprehensive hearing test	0365	1.47	$72.91	$22.48	$14.58
92559	E	Group audiometric testing					
92560	E	Bekesy audiometry, screen					
92561	X	Bekesy audiometry, diagnosis	0365	1.47	$72.91	$22.48	$14.58
92562	X	Loudness balance test	0365	1.47	$72.91	$22.48	$14.58
92563	X	Tone decay hearing test	0365	1.47	$72.91	$22.48	$14.58
92564	X	Sisi hearing test	0365	1.47	$72.91	$22.48	$14.58
92565	X	Stenger test, pure tone	0365	1.47	$72.91	$22.48	$14.58
92567	X	Tympanometry	0364	0.68	$33.72	$13.31	$6.74
92568	X	Acoustic reflex testing	0365	1.47	$72.91	$22.48	$14.58
92569	X	Acoustic reflex decay test	0365	1.47	$72.91	$22.48	$14.58
92571	X	Filtered speech hearing test	0365	1.47	$72.91	$22.48	$14.58
92572	X	Staggered spondaic word test	0365	1.47	$72.91	$22.48	$14.58
92573	X	Lombard test	0365	1.47	$72.91	$22.48	$14.58
92575	X	Sensorineural acuity test	0365	1.47	$72.91	$22.48	$14.58
92576	X	Synthetic sentence test	0365	1.47	$72.91	$22.48	$14.58
92577	X	Stenger test, speech	0365	1.47	$72.91	$22.48	$14.58
92579	X	Visual audiometry (vra)	0365	1.47	$72.91	$22.48	$14.58
92582	X	Conditioning play audiometry	0365	1.47	$72.91	$22.48	$14.58
92583	X	Select picture audiometry	0365	1.47	$72.91	$22.48	$14.58
92584	X	Electrocochleography	0363	2.83	$140.36	$53.22	$28.07
92585	S	Auditory evoked potential	0216	2.87	$142.34	$64.69	$28.47
*92586	S	Auditory evoked potentials, ltd	0971	1.55	$76.88		$15.38
92587	X	Evoked auditory test	0363	2.83	$140.36	$53.22	$28.07
92588	X	Evoked auditory test	0363	2.83	$140.36	$53.22	$28.07
92589	X	Auditory function test(s)	0365	1.47	$72.91	$22.48	$14.58
92590	E	Hearing aid exam, one ear					
92591	E	Hearing aid exam, both ears					

CPT codes and descriptions only are copyright American Medical Association. All Rights Reserved. Applicable FARS/DFARS Apply.
Copyright American Dental Association. All rights reserved.
*Code is new in 2001.

ADDENDUM B.—HOSPITAL OUTPATIENT DEPARTMENT (HOPD) PAYMENT STATUS BY HCPCS CODE AND RELATED INFORMATION—Continued

CPT/ HCPCS	HOPD Status Indicator	Description	APC	Relative Weight	Payment Rate	National Unadjusted Coinsurance	Minimum Unadjusted Coinsurance
92592	E	Hearing aid check, one ear					
92593	E	Hearing aid check, both ears					
92594	E	Electro hearng aid test, one					
92595	E	Electro hearng aid tst, both					
92596	X	Ear protector evaluation	0365	1.47	$72.91	$22.48	$14.58
92597D	E	Voice prosthetic evaluation					
92598D	E	Voice prosthetic modification					
92599	X	ENT procedure/service	0364	0.68	$33.72	$13.31	$6.74
92950	S	Heart/lung resuscitation cpr	0094	4.51	$223.68	$105.29	$44.74
92953	S	Temporary external pacing	0094	4.51	$223.68	$105.29	$44.74
92960	S	Cardioversion electric, ext	0094	4.51	$223.68	$105.29	$44.74
92961	S	Cardioversion, electric, int	0094	4.51	$223.68	$105.29	$44.74
92970	C	Cardioassist, internal					
92971	C	Cardioassist, external					
92975	C	Dissolve clot, heart vessel					
92977	T	Dissolve clot, heart vessel	0120	1.66	$82.33	$42.67	$16.47
92978	S	Intravasc us, heart add-on	0267	2.72	$134.90	$80.06	$26.98
92979	S	Intravasc us, heart add-on	0267	2.72	$134.90	$80.06	$26.98
92980	T	Insert intracoronary stent	0104	14.94	$740.96	$339.51	$148.19
92981	T	Insert intracoronary stent	0104	14.94	$740.96	$339.51	$148.19
92982	T	Coronary artery dilation	0082	51.01	$2,529.89	$1,351.74	$505.98
92984	T	Coronary artery dilation	0082	51.01	$2,529.89	$1,351.74	$505.98
92986	C	Revision of aortic valve					
92987	C	Revision of mitral valve					
92990	C	Revision of pulmonary valve					
92992	C	Revision of heart chamber					
92993	C	Revision of heart chamber					
92995	T	Coronary atherectomy	0083	29.70	$1,473.00	$794.30	$294.60
92996	T	Coronary atherectomy add-on	0083	29.70	$1,473.00	$794.30	$294.60
92997	C	Pul art balloon repr, percut					
92998	C	Pul art balloon repr, percut					
93000	E	Electrocardiogram, complete					
93005	X	Electrocardiogram, tracing	0099	0.38	$18.85	$14.68	$3.77
93010	E	Electrocardiogram report					
93012	X	Transmission of ecg	0097	1.62	$80.35	$62.40	$16.07
93014	E	Report on transmitted ecg					
93015	E	Cardiovascular stress test					
93016	E	Cardiovascular stress test					
93017	X	Cardiovascular stress test	0100	1.70	$84.32	$71.57	$16.86
93018	E	Cardiovascular stress test					
93024	X	Cardiac drug stress test	0100	1.70	$84.32	$71.57	$16.86
93040	E	Rhythm ECG with report					
93041	X	Rhythm ECG, tracing	0099	0.38	$18.85	$14.68	$3.77
93042	E	Rhythm ECG, report					
93224	E	ECG monitor/report, 24 hrs					
93225	X	ECG monitor/record, 24 hrs	0100	1.70	$84.32	$71.57	$16.86
93226	X	ECG monitor/report, 24 hrs	0100	1.70	$84.32	$71.57	$16.86
93227	E	ECG monitor/review, 24 hrs					
93230	E	ECG monitor/report, 24 hrs					
93231	X	Ecg monitor/record, 24 hrs	0100	1.70	$84.32	$71.57	$16.86
93232	X	ECG monitor/report, 24 hrs	0100	1.70	$84.32	$71.57	$16.86
93233	E	ECG monitor/review, 24 hrs					
93235	E	ECG monitor/report, 24 hrs					
93236	X	ECG monitor/report, 24 hrs	0100	1.70	$84.32	$71.57	$16.86
93237	E	ECG monitor/review, 24 hrs					
93268	E	ECG record/review					
93270	X	ECG recording	0097	1.62	$80.35	$62.40	$16.07
93271	X	Ecg/monitoring and analysis	0097	1.62	$80.35	$62.40	$16.07
93272	E	Ecg/review,interpret only					
93278	X	ECG/signal-averaged	0099	0.38	$18.85	$14.68	$3.77
93303	S	Echo transthoracic	0269	4.40	$218.22	$114.01	$43.64
93304	S	Echo transthoracic	0269	4.40	$218.22	$114.01	$43.64
93307	S	Echo exam of heart	0269	4.40	$218.22	$114.01	$43.64
93308	S	Echo exam of heart	0269	4.40	$218.22	$114.01	$43.64
93312	S	Echo transesophageal	0270	5.55	$275.25	$150.26	$55.05
93313	S	Echo transesophageal	0270	5.55	$275.25	$150.26	$55.05
93314	N	Echo transesophageal					
93315	S	Echo transesophageal	0270	5.55	$275.25	$150.26	$55.05
93316	S	Echo transesophageal	0270	5.55	$275.25	$150.26	$55.05
93317	N	Echo transesophageal					
*93318	S	Echo transesophageal	0270	5.55	$275.25	$150.26	$55.05
93320	S	Doppler echo exam, heart	0269	4.40	$218.22	$114.01	$43.64
93321	S	Doppler echo exam, heart	0269	4.40	$218.22	$114.01	$43.64
93325	S	Doppler color flow add-on	0269	4.40	$218.22	$114.01	$43.64

CPT codes and descriptions only are copyright American Medical Association. All Rights Reserved. Applicable FARS/DFARS Apply.
Copyright American Dental Association. All rights reserved.
*Code is new in 2001.

ADDENDUM B.—HOSPITAL OUTPATIENT DEPARTMENT (HOPD) PAYMENT STATUS BY HCPCS CODE AND RELATED INFORMATION—Continued

CPT/ HCPCS	HOPD Status Indicator	Description	APC	Relative Weight	Payment Rate	National Unadjusted Coinsurance	Minimum Unadjusted Coinsurance
93350	S	Echo transthoracic	0269	4.40	$218.22	$114.01	$43.64
93501	T	Right heart catheterization	0080	31.55	$1,564.75	$838.92	$312.95
93503	T	Insert/place heart catheter	0103	13.09	$649.21	$295.70	$129.84
93505	T	Biopsy of heart lining	0103	13.09	$649.21	$295.70	$129.84
93508	N	Cath placement, angiography					
93510	T	Left heart catheterization	0080	31.55	$1,564.75	$838.92	$312.95
93511	T	Left heart catheterization	0080	31.55	$1,564.75	$838.92	$312.95
93514	T	Left heart catheterization	0080	31.55	$1,564.75	$838.92	$312.95
93524	T	Left heart catheterization	0080	31.55	$1,564.75	$838.92	$312.95
93526	T	Rt & Lt heart catheters	0080	31.55	$1,564.75	$838.92	$312.95
93527	T	Rt & Lt heart catheters	0080	31.55	$1,564.75	$838.92	$312.95
93528	T	Rt & Lt heart catheters	0080	31.55	$1,564.75	$838.92	$312.95
93529	T	Rt, Lt heart catheterization	0080	31.55	$1,564.75	$838.92	$312.95
93530	T	Rt heart cath, congenital	0080	31.55	$1,564.75	$838.92	$312.95
93531	T	R & l heart cath, congenital	0080	31.55	$1,564.75	$838.92	$312.95
93532	T	R & l heart cath, congenital	0080	31.55	$1,564.75	$838.92	$312.95
93533	T	R & l heart cath, congenital	0080	31.55	$1,564.75	$838.92	$312.95
93536	T	Insert circulation assi	0103	13.09	$649.21	$295.70	$129.84
93539	N	Injection, cardiac cath					
93540	N	Injection, cardiac cath					
93541	N	Injection for lung angiogram					
93542	N	Injection for heart x-rays					
93543	N	Injection for heart x-rays					
93544	N	Injection for aortography					
93545	N	Inject for coronary x-rays					
93555	N	Imaging, cardiac cath					
93556	N	Imaging, cardiac cath					
93561	N	Cardiac output measurement					
93562	N	Cardiac output measurement					
93571	N	Heart flow reserve measure					
93572	N	Heart flow reserve measure					
93600	S	Bundle of His recording	0087	9.53	$472.65	$214.72	$94.53
93602	S	Intra-atrial recording	0087	9.53	$472.65	$214.72	$94.53
93603	S	Right ventricular recording	0087	9.53	$472.65	$214.72	$94.53
93607	S	Left ventricular recording	0087	9.53	$472.65	$214.72	$94.53
93609	S	Mapping of tachycardia	0087	9.53	$472.65	$214.72	$94.53
93610	S	Intra-atrial pacing	0087	9.53	$472.65	$214.72	$94.53
93612	S	Intraventricular pacing	0087	9.53	$472.65	$214.72	$94.53
93615	S	Esophageal recording	0087	9.53	$472.65	$214.72	$94.53
93616	S	Esophageal recording	0087	9.53	$472.65	$214.72	$94.53
93618	S	Heart rhythm pacing	0087	9.53	$472.65	$214.72	$94.53
93619	S	Electrophysiology evaluation	0085	27.06	$1,342.07	$654.48	$268.41
93620	S	Electrophysiology evaluation	0085	27.06	$1,342.07	$654.48	$268.41
93621	S	Electrophysiology evaluation	0085	27.06	$1,342.07	$654.48	$268.41
93622	S	Electrophysiology evaluation	0085	27.06	$1,342.07	$654.48	$268.41
93623	S	Stimulation, pacing heart	0087	9.53	$472.65	$214.72	$94.53
93624	S	Electrophysiologic study	0087	9.53	$472.65	$214.72	$94.53
93631	S	Heart pacing, mapping	0087	9.53	$472.65	$214.72	$94.53
93640	S	Evaluation heart device	0084	10.70	$530.68	$177.79	$106.14
93641	S	Electrophysiology evaluation	0084	10.70	$530.68	$177.79	$106.14
93642	S	Electrophysiology evaluation	0084	10.70	$530.68	$177.79	$106.14
93650	S	Ablate heart dysrhythm focus	0086	47.62	$2,361.76	$1,265.37	$472.35
93651	S	Ablate heart dysrhythm focus	0086	47.62	$2,361.76	$1,265.37	$472.35
93652	S	Ablate heart dysrhythm focus	0086	47.62	$2,361.76	$1,265.37	$472.35
93660	S	Tilt table evaluation	0101	4.47	$221.70	$128.84	$44.34
*93662	S	Intracardiac ECG	0270	5.55	$275.25	$150.26	$55.05
*93668	E	Peripheral vascular rehab					
93720	E	Total body plethysmography					
93721	S	Plethysmography tracing	0096	2.06	$102.16	$61.48	$20.43
93722	E	Plethysmography report					
93724	S	Analyze pacemaker system	0102	0.45	$22.32	$12.62	$4.46
93727	S	Analyze ilr system	0102	0.45	$22.32	$12.62	$4.46
93731	S	Analyze pacemaker system	0102	0.45	$22.32	$12.62	$4.46
93732	S	Analyze pacemaker system	0102	0.45	$22.32	$12.62	$4.46
93733	S	Telephone analy, pacemaker	0102	0.45	$22.32	$12.62	$4.46
93734	S	Analyze pacemaker system	0102	0.45	$22.32	$12.62	$4.46
93735	S	Analyze pacemaker system	0102	0.45	$22.32	$12.62	$4.46
93736	S	Telephone analy, pacemaker	0102	0.45	$22.32	$12.62	$4.46
93737	S	Analyze cardio/defibrillator	0102	0.45	$22.32	$12.62	$4.46
93738	S	Analyze cardio/defibrillator	0102	0.45	$22.32	$12.62	$4.46
93740	S	Temperature gradient studies	0096	2.06	$102.16	$61.48	$20.43
93741	S	Analyze ht pace device sngl	0102	0.45	$22.32	$12.62	$4.46
93742	S	Analyze ht pace device sngl	0102	0.45	$22.32	$12.62	$4.46
93743	S	Analyze ht pace device dual	0102	0.45	$22.32	$12.62	$4.46

CPT codes and descriptions only are copyright American Medical Association. All Rights Reserved. Applicable FARS/DFARS Apply.
Copyright American Dental Association. All rights reserved.
*Code is new in 2001.

ADDENDUM B.—HOSPITAL OUTPATIENT DEPARTMENT (HOPD) PAYMENT STATUS BY HCPCS CODE AND RELATED INFORMATION—Continued

CPT/ HCPCS	HOPD Status Indicator	Description	APC	Relative Weight	Payment Rate	National Unadjusted Coinsurance	Minimum Unadjusted Coinsurance
93744	S	Analyze ht pace device dual	0102	0.45	$22.32	$12.62	$4.46
93760	E	Cephalic thermogram					
93762	E	Peripheral thermogram					
93770	N	Measure venous pressure					
93784	E	Ambulatory BP monitoring					
93786	E	Ambulatory BP recording					
93788	E	Ambulatory BP analysis					
93790	E	Review/report BP recording					
93797	S	Cardiac rehab	0095	0.64	$31.74	$16.98	$6.35
93798	S	Cardiac rehab/monitor	0095	0.64	$31.74	$16.98	$6.35
93799	S	Cardiovascular procedure	0096	2.06	$102.16	$61.48	$20.43
93875	S	Extracranial study	0096	2.06	$102.16	$61.48	$20.43
93880	S	Extracranial study	0267	2.72	$134.90	$80.06	$26.98
93882	S	Extracranial study	0267	2.72	$134.90	$80.06	$26.98
93886	S	Intracranial study	0267	2.72	$134.90	$80.06	$26.98
93888	S	Intracranial study	0267	2.72	$134.90	$80.06	$26.98
93922	S	Extremity study	0096	2.06	$102.16	$61.48	$20.43
93923	S	Extremity study	0096	2.06	$102.16	$61.48	$20.43
93924	S	Extremity study	0096	2.06	$102.16	$61.48	$20.43
93925	S	Lower extremity study	0267	2.72	$134.90	$80.06	$26.98
93926	S	Lower extremity study	0267	2.72	$134.90	$80.06	$26.98
93930	S	Upper extremity study	0267	2.72	$134.90	$80.06	$26.98
93931	S	Upper extremity study	0267	2.72	$134.90	$80.06	$26.98
93965	S	Extremity study	0096	2.06	$102.16	$61.48	$20.43
93970	S	Extremity study	0267	2.72	$134.90	$80.06	$26.98
93971	S	Extremity study	0267	2.72	$134.90	$80.06	$26.98
93975	S	Vascular study	0267	2.72	$134.90	$80.06	$26.98
93976	S	Vascular study	0267	2.72	$134.90	$80.06	$26.98
93978	S	Vascular study	0267	2.72	$134.90	$80.06	$26.98
93979	S	Vascular study	0267	2.72	$134.90	$80.06	$26.98
93980	S	Penile vascular study	0267	2.72	$134.90	$80.06	$26.98
93981	S	Penile vascular study	0267	2.72	$134.90	$80.06	$26.98
93990	S	Doppler flow testing	0267	2.72	$134.90	$80.06	$26.98
94010	X	Breathing capacity test	0367	0.83	$41.16	$20.65	$8.23
94014	X	Patient recorded spirometry	0369	2.34	$116.06	$58.50	$23.21
94015	X	Patient recorded spirometry	0369	2.34	$116.06	$58.50	$23.21
94016	X	Review patient spirometry	0369	2.34	$116.06	$58.50	$23.21
94060	X	Evaluation of wheezing	0368	1.66	$82.33	$42.44	$16.47
94070	X	Evaluation of wheezing	0369	2.34	$116.06	$58.50	$23.21
94150	N	Vital capacity test					
94200	X	Lung function test (MBC/MVV)	0367	0.83	$41.16	$20.65	$8.23
94240	X	Residual lung capacity	0368	1.66	$82.33	$42.44	$16.47
94250	X	Expired gas collection	0367	0.83	$41.16	$20.65	$8.23
94260	X	Thoracic gas volume	0368	1.66	$82.33	$42.44	$16.47
94350	X	Lung nitrogen washout curve	0368	1.66	$82.33	$42.44	$16.47
94360	X	Measure airflow resistance	0368	1.66	$82.33	$42.44	$16.47
94370	X	Breath airway closing volume	0368	1.66	$82.33	$42.44	$16.47
94375	X	Respiratory flow volume loop	0367	0.83	$41.16	$20.65	$8.23
94400	X	CO2 breathing response curve	0367	0.83	$41.16	$20.65	$8.23
94450	X	Hypoxia response curve	0367	0.83	$41.16	$20.65	$8.23
94620	X	Pulmonary stress test/simple	0368	1.66	$82.33	$42.44	$16.47
94621	X	Pulm stress test/complex	0369	2.34	$116.06	$58.50	$23.21
94640	S	Airway inhalation treatment	0077	0.43	$21.33	$12.62	$4.27
94642	S	Aerosol inhalation treatment	0078	1.34	$66.46	$29.13	$13.29
94650	S	Pressure breathing (IPPB)	0077	0.43	$21.33	$12.62	$4.27
94651	S	Pressure breathing (IPPB)	0077	0.43	$21.33	$12.62	$4.27
94652	C	Pressure breathing (IPPB)					
94656	S	Initial ventilator mgmt	0079	3.18	$157.72	$107.70	$31.54
94657	S	Continued ventilator mgmt	0079	3.18	$157.72	$107.70	$31.54
94660	S	Pos airway pressure, CPAP	0079	3.18	$157.72	$107.70	$31.54
94662	S	Neg press ventilation, cnp	0079	3.18	$157.72	$107.70	$31.54
94664	S	Aerosol or vapor inhalations	0077	0.43	$21.33	$12.62	$4.27
94665	S	Aerosol or vapor inhalations	0077	0.43	$21.33	$12.62	$4.27
94667	S	Chest wall manipulation	0077	0.43	$21.33	$12.62	$4.27
94668	S	Chest wall manipulation	0077	0.43	$21.33	$12.62	$4.27
94680	X	Exhaled air analysis, o2	0367	0.83	$41.16	$20.65	$8.23
94681	X	Exhaled air analysis, o2/co2	0368	1.66	$82.33	$42.44	$16.47
94690	X	Exhaled air analysis	0367	0.83	$41.16	$20.65	$8.23
94720	X	Monoxide diffusing capacity	0367	0.83	$41.16	$20.65	$8.23
94725	X	Membrane diffusion capacity	0368	1.66	$82.33	$42.44	$16.47
94750	X	Pulmonary compliance study	0368	1.66	$82.33	$42.44	$16.47
94760	N	Measure blood oxygen level					
94761	N	Measure blood oxygen level					
94762	N	Measure blood oxygen level					

CPT codes and descriptions only are copyright American Medical Association. All Rights Reserved. Applicable FARS/DFARS Apply.
Copyright American Dental Association. All rights reserved.
*Code is new in 2001.

ADDENDUM B.—HOSPITAL OUTPATIENT DEPARTMENT (HOPD) PAYMENT STATUS BY HCPCS CODE AND RELATED INFORMATION—Continued

CPT/ HCPCS	HOPD Status Indicator	Description	APC	Relative Weight	Payment Rate	National Unadjusted Coinsurance	Minimum Unadjusted Coinsurance
94770	X	Exhaled carbon dioxide test	0367	0.83	$41.16	$20.65	$8.23
94772	X	Breath recording, infant	0369	2.34	$116.06	$58.50	$23.21
94799	X	Pulmonary service/procedure	0367	0.83	$41.16	$20.65	$8.23
95004	X	Allergy skin tests	0370	0.57	$28.27	$11.81	$5.65
95010	X	Sensitivity skin tests	0370	0.57	$28.27	$11.81	$5.65
95015	X	Sensitivity skin tests	0370	0.57	$28.27	$11.81	$5.65
95024	X	Allergy skin tests	0370	0.57	$28.27	$11.81	$5.65
95027	X	Skin end point titration	0370	0.57	$28.27	$11.81	$5.65
95028	X	Allergy skin tests	0370	0.57	$28.27	$11.81	$5.65
95044	X	Allergy patch tests	0370	0.57	$28.27	$11.81	$5.65
95052	X	Photo patch test	0370	0.57	$28.27	$11.81	$5.65
95056	X	Photosensitivity tests	0370	0.57	$28.27	$11.81	$5.65
95060	X	Eye allergy tests	0370	0.57	$28.27	$11.81	$5.65
95065	X	Nose allergy test	0370	0.57	$28.27	$11.81	$5.65
95070	X	Bronchial allergy tests	0369	2.34	$116.06	$58.50	$23.21
95071	X	Bronchial allergy tests	0369	2.34	$116.06	$58.50	$23.21
95075	X	Ingestion challenge test	0361	3.53	$175.07	$88.09	$35.01
95078	X	Provocative testing	0370	0.57	$28.27	$11.81	$5.65
95115	X	Immunotherapy, one injection	0371	0.32	$15.87	$3.67	$3.17
95117	X	Immunotherapy injections	0371	0.32	$15.87	$3.67	$3.17
95120	E	Immunotherapy, one injection					
95125	E	Immunotherapy, many antigens					
95130	E	Immunotherapy, insect venom					
95131	E	Immunotherapy, insect venoms					
95132	E	Immunotherapy, insect venoms					
95133	E	Immunotherapy, insect venoms					
95134	E	Immunotherapy, insect venoms					
95144	X	Antigen therapy services	0371	0.32	$15.87	$3.67	$3.17
95145	X	Antigen therapy services	0371	0.32	$15.87	$3.67	$3.17
95146	X	Antigen therapy services	0371	0.32	$15.87	$3.67	$3.17
95147	X	Antigen therapy services	0371	0.32	$15.87	$3.67	$3.17
95148	X	Antigen therapy services	0371	0.32	$15.87	$3.67	$3.17
95149	X	Antigen therapy services	0371	0.32	$15.87	$3.67	$3.17
95165	X	Antigen therapy services	0371	0.32	$15.87	$3.67	$3.17
95170	X	Antigen therapy services	0371	0.32	$15.87	$3.67	$3.17
95180	X	Rapid desensitization	0370	0.57	$28.27	$11.81	$5.65
95199	X	Allergy immunology services	0370	0.57	$28.27	$11.81	$5.65
95805	S	Multiple sleep latency test	0213	11.15	$553.00	$290.42	$110.60
95806	S	Sleep study, unattended	0213	11.15	$553.00	$290.42	$110.60
95807	S	Sleep study, attended	0213	11.15	$553.00	$290.42	$110.60
95808	S	Polysomnography, 1-3	0213	11.15	$553.00	$290.42	$110.60
95810	S	Polysomnography, 4 or more	0213	11.15	$553.00	$290.42	$110.60
95811	S	Polysomnography w/cpap	0213	11.15	$553.00	$290.42	$110.60
95812	S	Electroencephalogram (EEG)	0213	11.15	$553.00	$290.42	$110.60
95813	S	Electroencephalogram (EEG)	0213	11.15	$553.00	$290.42	$110.60
95816	S	Electroencephalogram (EEG)	0214	2.32	$115.06	$58.50	$23.01
95819	S	Electroencephalogram (EEG)	0214	2.32	$115.06	$58.50	$23.01
95822	S	Sleep electroencephalogram	0214	2.32	$115.06	$58.50	$23.01
95824	S	Electroencephalography	0214	2.32	$115.06	$58.50	$23.01
95827	S	Night electroencephalogram	0213	11.15	$553.00	$290.42	$110.60
95829	S	Surgery electrocorticogram	0214	2.32	$115.06	$58.50	$23.01
95830	E	Insert electrodes for EEG					
95831	N	Limb muscle testing, manual					
95832	N	Hand muscle testing, manual					
95833	N	Body muscle testing, manual					
95834	N	Body muscle testing, manual					
95851	N	Range of motion measurements					
95852	N	Range of motion measurements					
95857	S	Tensilon test	0215	1.15	$57.04	$30.05	$11.41
95858	S	Tensilon test & myogram	0215	1.15	$57.04	$30.05	$11.41
95860	S	Muscle test, one limb	0215	1.15	$57.04	$30.05	$11.41
95861	S	Muscle test, two limbs	0215	1.15	$57.04	$30.05	$11.41
95863	S	Muscle test, 3 limbs	0216	2.87	$142.34	$64.69	$28.47
95864	S	Muscle test, 4 limbs	0215	1.15	$57.04	$30.05	$11.41
95867	S	Muscle test, head or neck	0216	2.87	$142.34	$64.69	$28.47
95868	S	Muscle test, head or neck	0216	2.87	$142.34	$64.69	$28.47
95869	S	Muscle test, thor paraspinal	0215	1.15	$57.04	$30.05	$11.41
95870	S	Muscle test, nonparaspinal	0215	1.15	$57.04	$30.05	$11.41
95872	S	Muscle test, one fiber	0215	1.15	$57.04	$30.05	$11.41
95875	S	Limb exercise test	0217	5.87	$291.13	$156.68	$58.23
95900	S	Motor nerve conduction test	0215	1.15	$57.04	$30.05	$11.41
95903	S	Motor nerve conduction test	0215	1.15	$57.04	$30.05	$11.41
95904	S	Sense/mixed n conduction tst	0215	1.15	$57.04	$30.05	$11.41
95920	S	Intraop nerve test add-on	0216	2.87	$142.34	$64.69	$28.47

CPT codes and descriptions only are copyright American Medical Association. All Rights Reserved. Applicable FARS/DFARS Apply.
Copyright American Dental Association. All rights reserved.
*Code is new in 2001.

ADDENDUM B.—HOSPITAL OUTPATIENT DEPARTMENT (HOPD) PAYMENT STATUS BY HCPCS CODE AND RELATED INFORMATION—Continued

CPT/ HCPCS	HOPD Status Indicator	Description	APC	Relative Weight	Payment Rate	National Unadjusted Coinsurance	Minimum Unadjusted Coinsurance
95921	S	Autonomic nerv function test	0216	2.87	$142.34	$64.69	$28.47
95922	S	Autonomic nerv function test	0216	2.87	$142.34	$64.69	$28.47
95923	S	Autonomic nerv function test	0216	2.87	$142.34	$64.69	$28.47
95925	S	Somatosensory testing	0216	2.87	$142.34	$64.69	$28.47
95926	S	Somatosensory testing	0216	2.87	$142.34	$64.69	$28.47
95927	S	Somatosensory testing	0216	2.87	$142.34	$64.69	$28.47
95930	S	Visual evoked potential test	0216	2.87	$142.34	$64.69	$28.47
95933	S	Blink reflex test	0215	1.15	$57.04	$30.05	$11.41
95934	S	H-reflex test	0215	1.15	$57.04	$30.05	$11.41
95936	S	H-reflex test	0216	2.87	$142.34	$64.69	$28.47
95937	S	Neuromuscular junction test	0215	1.15	$57.04	$30.05	$11.41
95950	S	Ambulatory eeg monitoring	0217	5.87	$291.13	$156.68	$58.23
95951	S	EEG monitoring/videorecord	0213	11.15	$553.00	$290.42	$110.60
95953	S	EEG monitoring/computer	0213	11.15	$553.00	$290.42	$110.60
95954	S	EEG monitoring/giving drugs	0213	11.15	$553.00	$290.42	$110.60
95955	S	EEG during surgery	0214	2.32	$115.06	$58.50	$23.01
95956	N	Eeg monitoring, cable/radio					
95957	N	EEG digital analysis					
95958	S	EEG monitoring/function test	0213	11.15	$553.00	$290.42	$110.60
95961	S	Electrode stimulation, brain	0216	2.87	$142.34	$64.69	$28.47
95962	S	Electrode stim, brain add-on	0216	2.87	$142.34	$64.69	$28.47
95970	S	Analyze neurostim, no prog	0102	0.45	$22.32	$12.62	$4.46
95971	S	Analyze neurostim, simple	0102	0.45	$22.32	$12.62	$4.46
95972	S	Analyze neurostim, complex	0102	0.45	$22.32	$12.62	$4.46
95973	S	Analyze neurostim, complex	0102	0.45	$22.32	$12.62	$4.46
95974	S	Cranial neurostim, complex	0102	0.45	$22.32	$12.62	$4.46
95975	S	Cranial neurostim, complex	0102	0.45	$22.32	$12.62	$4.46
95999	N	Neurological procedure					
96100	X	Psychological testing	0373	3.21	$159.20	$44.96	$31.84
96105	X	Assessment of aphasia	0373	3.21	$159.20	$44.96	$31.84
96110	X	Developmental test, lim	0373	3.21	$159.20	$44.96	$31.84
96111	X	Developmental test, extend	0373	3.21	$159.20	$44.96	$31.84
96115	X	Neurobehavior status exam	0373	3.21	$159.20	$44.96	$31.84
96117	X	Neuropsych test battery	0373	3.21	$159.20	$44.96	$31.84
96400	E	Chemotherapy, sc/im					
96405	E	Intralesional chemo admin					
96406	E	Intralesional chemo admin					
96408	E	Chemotherapy, push technique					
96410	E	Chemotherapy,infusion method					
96412	E	Chemo, infuse method add-on					
96414	E	Chemo, infuse method add-on					
96420	E	Chemotherapy, push technique					
96422	E	Chemotherapy,infusion method					
96423	E	Chemo, infuse method add-on					
96425	E	Chemotherapy,infusion method					
96440	E	Chemotherapy, intracavitary					
96445	E	Chemotherapy, intracavitary					
96450	E	Chemotherapy, into CNS					
96520	E	Pump refilling, maintenance					
96530	E	Pump refilling, maintenance					
96542	E	Chemotherapy injection					
96545	E	Provide chemotherapy agent					
96549	E	Chemotherapy, unspecified					
96570	T	Photodynamic tx, 30 min	0973	5.16	$255.91		$51.18
96571	T	Photodynamic tx, addl 15 min	0973	5.16	$255.91		$51.18
96900	S	Ultraviolet light therapy	0001	0.47	$23.31	$8.49	$4.66
96902	N	Trichogram					
96910	S	Photochemotherapy with UV-B	0001	0.47	$23.31	$8.49	$4.66
96912	S	Photochemotherapy with UV-A	0001	0.47	$23.31	$8.49	$4.66
96913	S	Photochemotherapy, UV-A or B	0001	0.47	$23.31	$8.49	$4.66
96999	S	Dermatological procedure	0001	0.47	$23.31	$8.49	$4.66
97001	A	Pt evaluation					
97002	A	Pt re-evaluation					
97003	A	Ot evaluation					
97004	A	Ot re-evaluation					
97010	A	Hot or cold packs therapy					
97012	A	Mechanical traction therapy					
97014	A	Electric stimulation therapy					
97016	A	Vasopneumatic device therapy					
97018	A	Paraffin bath therapy					
97020	A	Microwave therapy					
97022	A	Whirlpool therapy					
97024	A	Diathermy treatment					
97026	A	Infrared therapy					

CPT codes and descriptions only are copyright American Medical Association. All Rights Reserved. Applicable FARS/DFARS Apply.
Copyright American Dental Association. All rights reserved.
*Code is new in 2001.

ADDENDUM B.—HOSPITAL OUTPATIENT DEPARTMENT (HOPD) PAYMENT STATUS BY HCPCS CODE AND RELATED INFORMATION—Continued

CPT/ HCPCS	HOPD Status Indicator	Description	APC	Relative Weight	Payment Rate	National Unadjusted Coinsurance	Minimum Unadjusted Coinsurance
97028	A	Ultraviolet therapy					
97032	A	Electrical stimulation					
97033	A	Electric current therapy					
97034	A	Contrast bath therapy					
97035	A	Ultrasound therapy					
97036	A	Hydrotherapy					
97039	A	Physical therapy treatment					
97110	A	Therapeutic exercises					
97112	A	Neuromuscular reeducation					
97113	A	Aquatic therapy/exercises					
97116	A	Gait training therapy					
97124	A	Massage therapy					
97139	A	Physical medicine procedure					
97140	A	Manual therapy					
97150	A	Group therapeutic procedures					
97504	A	Orthotic training					
97520	A	Prosthetic training					
97530	A	Therapeutic activities					
*97532	A	Cognitive skills development					
*97533	A	Sensory integration					
97535	A	Self care mngment training					
97537	A	Community/work reintegration					
97542	A	Wheelchair mngment training					
97545	A	Work hardening					
97546	A	Work hardening add-on					
*97601	A	Wound care selective					
*97602	N	Wound care non-selective					
97703	A	Prosthetic checkout					
97750	A	Physical performance test					
97770D	A	Cognitive skills development					
97780	E	Acupuncture w/o stimul					
97781	E	Acupuncture w/stimul					
97799	A	Physical medicine procedure					
*97802	E	Medical nutrition					
*97803	E	Medical nutrition					
*97804	E	Medical nutrition					
98925	S	Osteopathic manipulation	0060	0.77	$38.19	$7.80	$7.64
98926	S	Osteopathic manipulation	0060	0.77	$38.19	$7.80	$7.64
98927	S	Osteopathic manipulation	0060	0.77	$38.19	$7.80	$7.64
98928	S	Osteopathic manipulation	0060	0.77	$38.19	$7.80	$7.64
98929	S	Osteopathic manipulation	0060	0.77	$38.19	$7.80	$7.64
98940	S	Chiropractic manipulation	0060	0.77	$38.19	$7.80	$7.64
98941	S	Chiropractic manipulation	0060	0.77	$38.19	$7.80	$7.64
98942	S	Chiropractic manipulation	0060	0.77	$38.19	$7.80	$7.64
98943	E	Chiropractic manipulation					
99000	E	Specimen handling					
99001	E	Specimen handling					
99002	E	Device handling					
99024	E	Postop follow-up visit					
99025	E	Initial surgical evaluation					
99050	E	Medical services after hrs					
99052	E	Medical services at night					
99054	E	Medical servcs, unusual hrs					
99056	E	Non-office medical services					
99058	E	Office emergency care					
99070	E	Special supplies					
99071	E	Patient education materials					
99075	E	Medical testimony					
99078	E	Group health education					
99080	E	Special reports or forms					
99082	E	Unusual physician travel					
99090	E	Computer data analysis					
99100	E	Special anesthesia service					
99116	E	Anesthesia with hypothermia					
99135	E	Special anesthesia procedure					
99140	E	Emergency anesthesia					
99141	N	Sedation, iv/im or inhalant					
99142	N	Sedation, oral/rectal/nasal					
99170	T	Anogenital exam, child	0192	2.38	$118.04	$35.33	$23.61
*99172	E	Visual function screening					
99173	E	Visual screening test					
99175	N	Induction of vomiting					
99183	E	Hyperbaric oxygen therapy					
99185	N	Regional hypothermia					

CPT codes and descriptions only are copyright American Medical Association. All Rights Reserved. Applicable FARS/DFARS Apply.
Copyright American Dental Association. All rights reserved.
*Code is new in 2001.

ADDENDUM B.—HOSPITAL OUTPATIENT DEPARTMENT (HOPD) PAYMENT STATUS BY HCPCS CODE AND RELATED INFORMATION—Continued

CPT/ HCPCS	HOPD Status Indicator	Description	APC	Relative Weight	Payment Rate	National Unadjusted Coinsurance	Minimum Unadjusted Coinsurance
99186	N	Total body hypothermia					
99190	C	Special pump services					
99191	C	Special pump services					
99192	C	Special pump services					
99195	X	Phlebotomy	0372	0.43	$21.33	$10.09	$4.27
99199	E	Special service/proc/report					
99201	V	Office/outpatient visit, new	0600	0.98	$48.61	$9.72	$9.72
99202	V	Office/outpatient visit, new	0600	0.98	$48.61	$9.72	$9.72
99203	V	Office/outpatient visit, new	0601	1.00	$49.60	$9.92	$9.92
99204	V	Office/outpatient visit, new	0602	1.66	$82.33	$16.47	$16.47
99205	V	Office/outpatient visit, new	0602	1.66	$82.33	$16.47	$16.47
99211	V	Office/outpatient visit, est	0600	0.98	$48.61	$9.72	$9.72
99212	V	Office/outpatient visit, est	0600	0.98	$48.61	$9.72	$9.72
99213	V	Office/outpatient visit, est	0601	1.00	$49.60	$9.92	$9.92
99214	V	Office/outpatient visit, est	0602	1.66	$82.33	$16.47	$16.47
99215	V	Office/outpatient visit, est	0602	1.66	$82.33	$16.47	$16.47
99217	N	Observation care discharge					
99218	N	Observation care					
99219	N	Observation care					
99220	N	Observation care					
99221	E	Initial hospital care					
99222	E	Initial hospital care					
99223	E	Initial hospital care					
99231	E	Subsequent hospital care					
99232	E	Subsequent hospital care					
99233	E	Subsequent hospital care					
99234	N	Observ/hosp same date					
99235	N	Observ/hosp same date					
99236	N	Observ/hosp same date					
99238	E	Hospital discharge day					
99239	E	Hospital discharge day					
99241	V	Office consultation	0600	0.98	$48.61	$9.72	$9.72
99242	V	Office consultation	0600	0.98	$48.61	$9.72	$9.72
99243	V	Office consultation	0601	1.00	$49.60	$9.92	$9.92
99244	V	Office consultation	0602	1.66	$82.33	$16.47	$16.47
99245	V	Office consultation	0602	1.66	$82.33	$16.47	$16.47
99251	C	Initial inpatient consult					
99252	C	Initial inpatient consult					
99253	C	Initial inpatient consult					
99254	C	Initial inpatient consult					
99255	C	Initial inpatient consult					
99261	C	Follow-up inpatient consult					
99262	C	Follow-up inpatient consult					
99263	C	Follow-up inpatient consult					
99271	V	Confirmatory consultation	0600	0.98	$48.61	$9.72	$9.72
99272	V	Confirmatory consultation	0600	0.98	$48.61	$9.72	$9.72
99273	V	Confirmatory consultation	0601	1.00	$49.60	$9.92	$9.92
99274	V	Confirmatory consultation	0602	1.66	$82.33	$16.47	$16.47
99275	V	Confirmatory consultation	0602	1.66	$82.33	$16.47	$16.47
99281	V	Emergency dept visit	0610	1.34	$66.46	$20.65	$13.29
99282	V	Emergency dept visit	0610	1.34	$66.46	$20.65	$13.29
99283	V	Emergency dept visit	0611	2.11	$104.65	$36.47	$20.93
99284	V	Emergency dept visit	0612	3.19	$158.21	$54.14	$31.64
99285	V	Emergency dept visit	0612	3.19	$158.21	$54.14	$31.64
99288	E	Direct advanced life support					
99291	S	Critical care, first hour	0620	8.60	$426.53	$152.78	$85.31
99292	N	Critical care, addl 30 min					
99295	C	Neonatal critical care					
99296	C	Neonatal critical care					
99297	C	Neonatal critical care					
99298	C	Neonatal critical care					
99301	E	Nursing facility care					
99302	E	Nursing facility care					
99303	E	Nursing facility care					
99311	E	Nursing fac care, subseq					
99312	E	Nursing fac care, subseq					
99313	E	Nursing fac care, subseq					
99315	E	Nursing fac discharge day					
99316	E	Nursing fac discharge day					
99321	E	Rest home visit, new patient					
99322	E	Rest home visit, new patient					
99323	E	Rest home visit, new patient					
99331	E	Rest home visit, est pat					
99332	E	Rest home visit, est pat					

CPT codes and descriptions only are copyright American Medical Association. All Rights Reserved. Applicable FARS/DFARS Apply.
Copyright American Dental Association. All rights reserved.
*Code is new in 2001.

ADDENDUM B.—HOSPITAL OUTPATIENT DEPARTMENT (HOPD) PAYMENT STATUS BY HCPCS CODE AND RELATED INFORMATION—Continued

CPT/ HCPCS	HOPD Status Indicator	Description	APC	Relative Weight	Payment Rate	National Unadjusted Coinsurance	Minimum Unadjusted Coinsurance
99333	E	Rest home visit, est pat					
99341	E	Home visit, new patient					
99342	E	Home visit, new patient					
99343	E	Home visit, new patient					
99344	E	Home visit, new patient					
99345	E	Home visit, new patient					
99347	E	Home visit, est patient					
99348	E	Home visit, est patient					
99349	E	Home visit, est patient					
99350	E	Home visit, est patient					
99354	N	Prolonged service, office					
99355	N	Prolonged service, office					
99356	C	Prolonged service, inpatient					
99357	C	Prolonged service, inpatient					
99358	N	Prolonged serv, w/o contact					
99359	N	Prolonged serv, w/o contact					
99360	E	Physician standby services					
99361	E	Physician/team conference					
99362	E	Physician/team conference					
99371	E	Physician phone consultation					
99372	E	Physician phone consultation					
99373	E	Physician phone consultation					
99374	E	Home health care supervision					
99375D	E	Home health care supervision					
99377	E	Hospice care supervision					
99378D	E	Hospice care supervision					
99379	E	Nursing fac care supervision					
99380	E	Nursing fac care supervision					
99381	E	Prev visit, new, infant					
99382	E	Prev visit, new, age 1-4					
99383	E	Prev visit, new, age 5-11					
99384	E	Prev visit, new, age 12-17					
99385	E	Prev visit, new, age 18-39					
99386	E	Prev visit, new, age 40-64					
99387	E	Prev visit, new, 65 & over					
99391	E	Prev visit, est, infant					
99392	E	Prev visit, est, age 1-4					
99393	E	Prev visit, est, age 5-11					
99394	E	Prev visit, est, age 12-17					
99395	E	Prev visit, est, age 18-39					
99396	E	Prev visit, est, age 40-64					
99397	E	Prev visit, est, 65 & over					
99401	E	Preventive counseling, indiv					
99402	E	Preventive counseling, indiv					
99403	E	Preventive counseling, indiv					
99404	E	Preventive counseling, indiv					
99411	E	Preventive counseling, group					
99412	E	Preventive counseling, group					
99420	E	Health risk assessment test					
99429	E	Unlisted preventive service					
99431	N	Initial care, normal newborn					
99432	N	Newborn care, not in hosp					
99433	C	Normal newborn care/hospital					
99435	E	Newborn discharge day hosp					
99436	N	Attendance, birth					
99440	S	Newborn resuscitation	0094	4.51	$223.68	$105.29	$44.74
99450	E	Life/disability evaluation					
99455	E	Disability examination					
99456	E	Disability examination					
99499	E	Unlisted e&m service					
A0021	E	Outside state ambulance serv					
A0030D	A	Air ambulance service					
A0040D	A	Helicopter ambulance service					
A0050D	A	Water amb service emergency					
A0080	E	Noninterest escort in non er					
A0090	E	Interest escort in non er					
A0100	E	Nonemergency transport taxi					
A0110	E	Nonemergency transport bus					
A0120	E	Noner transport mini-bus					
A0130	E	Noner transport wheelch van					
A0140	E	Nonemergency transport air					
A0160	E	Noner transport case worker					
A0170	E	Noner transport parking fees					
A0180	E	Noner transport lodgng recip					

CPT codes and descriptions only are copyright American Medical Association. All Rights Reserved. Applicable FARS/DFARS Apply.
Copyright American Dental Association. All rights reserved.
*Code is new in 2001.

ADDENDUM B.—HOSPITAL OUTPATIENT DEPARTMENT (HOPD) PAYMENT STATUS BY HCPCS CODE AND RELATED INFORMATION—Continued

CPT/ HCPCS	HOPD Status Indicator	Description	APC	Relative Weight	Payment Rate	National Unadjusted Coinsurance	Minimum Unadjusted Coinsurance
A0190	E	Noner transport meals recip					
A0200	E	Noner transport lodgng escrt					
A0210	E	Noner transport meals escort					
A0225	A	Neonatal emergency transport					
A0300D	A	Ambulance basic non-emer all					
A0302D	A	Ambulance basic emergeny all					
A0304D	A	Amb adv non-er no serv all					
A0306D	A	Amb adv non-er spec serv all					
A0308D	A	Amb adv er no spec serv all					
A0310D	A	Amb adv er spec serv all					
A0320D	A	Amb basic non-er + supplies					
A0322D	A	Amb basic emerg + supplies					
A0324D	A	Adv non-er serv sep mileage					
A0326D	A	Adv non-er no serv sep mile					
A0328D	A	Adv er no serv sep mileage					
A0330D	A	Adv er spec serv sep mile					
A0340D	A	Amb basic non-er + mileage					
A0342D	A	Ambul basic emer + mileage					
A0344D	A	Amb adv non-er no serv +mile					
A0346D	A	Amb adv non-er serv + mile					
A0348D	A	Adv emer no spec serv + mile					
A0350D	A	Adv emer spec serv + mileage					
A0360D	A	Basic non-er sep mile & supp					
A0362D	A	Basic emer sep mile & supply					
A0364D	A	Adv non-er no serv sep mi&su					
A0366D	A	Adv non-er serv sep mil&supp					
A0368	A	Adv er no serv sep mile&supp					
A0370D	A	Adv er spec serv sep mi&supp					
A0380D	A	Basic life support mileage					
A0382	A	Basic support routine suppls					
A0384	A	Bls defibrillation supplies					
A0390D	A	Advanced life support mileag					
A0392	A	Als defibrillation supplies					
A0394	A	Als IV drug therapy supplies					
A0396	A	Als esophageal intub suppls					
A0398	A	Als routine disposble suppls					
A0420	A	Ambulance waiting 1/2 hr					
A0422	A	Ambulance O2 life sustaining					
A0424	A	Extra ambulance attendant					
A0425	A	Ground mileage					
A0426	A	Als 1					
A0427	A	ALS1-emergency					
A0428	A	bls					
A0429	A	BLS-emergency					
A0430	A	Fixed wing air transport					
A0431	A	Rotary wing air transport					
A0432	A	PI volunteer ambulance co					
A0433	A	als 2					
A0434	A	Specialty care transport					
A0435	A	Fixed wing air mileage					
A0436	A	Rotary wing air mileage					
A0888	E	Noncovered ambulance mileage					
A0999	A	Unlisted ambulance service					
A4206	E	1 CC sterile syringe&needle					
A4207	E	2 CC sterile syringe&needle					
A4208	E	3 CC sterile syringe&needle					
A4209	E	5+ CC sterile syringe&needle					
A4210	E	Nonneedle injection device					
A4211	E	Supp for self-adm injections					
A4212	E	Non coring needle or stylet					
A4213	E	20+ CC syringe only					
A4214	A	30 CC sterile water/saline					
A4215	E	Sterile needle					
A4220	E	Infusion pump refill kit					
A4221	A	Maint drug infus cath per wk					
A4222	A	Drug infusion pump supplies					
A4230	A	Infus insulin pump non needl					
A4231	A	Infusion insulin pump needle					
A4232	A	Syringe w/needle insulin 3cc					
A4244	E	Alcohol or peroxide per pint					
A4245	E	Alcohol wipes per box					
A4246	E	Betadine/phisohex solution					
A4247	E	Betadine/iodine swabs/wipes					
A4250	E	Urine reagent strips/tablets					

CPT codes and descriptions only are copyright American Medical Association. All Rights Reserved. Applicable FARS/DFARS Apply.
Copyright American Dental Association. All rights reserved.
* Code is new in 2001.

ADDENDUM B.—HOSPITAL OUTPATIENT DEPARTMENT (HOPD) PAYMENT STATUS BY HCPCS CODE AND RELATED INFORMATION—Continued

CPT/ HCPCS	HOPD Status Indicator	Description	APC	Relative Weight	Payment Rate	National Unadjusted Coinsurance	Minimum Unadjusted Coinsurance
A4253	A	Blood glucose/reagent strips					
A4254	A	Battery for glucose monitor					
A4255	A	Glucose monitor platforms					
A4256	A	Calibrator solution/chips					
A4258	A	Lancet device each					
A4259	A	Lancets per box					
A4260	E	Levonorgestrel implant					
A4261	E	Cervical cap contraceptive					
A4262	N	Temporary tear duct plug					
A4263	N	Permanent tear duct plug					
A4265	A	Paraffin					
A4270	A	Disposable endoscope sheath					
A4280	A	Brst prsths adhsv attchmnt					
A4290	N	Sacral nerve stim test lead					
A4300	A	Cath impl vasc access portal					
A4301	A	Implantable access syst perc					
A4305	A	Drug delivery system >=50 ML					
A4306	A	Drug delivery system <=5 ML					
A4310	A	Insert tray w/o bag/cath					
A4311	A	Catheter w/o bag 2-way latex					
A4312	A	Cath w/o bag 2-way silicone					
A4313	A	Catheter w/bag 3-way					
A4314	A	Cath w/drainage 2-way latex					
A4315	A	Cath w/drainage 2-way silcne					
A4316	A	Cath w/drainage 3-way					
A4319	A	Sterile H2O irrigation solut					
A4320	A	Irrigation tray					
A4321	A	Cath therapeutic irrig agent					
A4322	A	Irrigation syringe					
A4323	A	Saline irrigation solution					
A4324	A	Male ext cath w/adh coating					
A4325	A	Male ext cath w/adh strip					
A4326	A	Male external catheter					
A4327	A	Fem urinary collect dev cup					
A4328	A	Fem urinary collect pouch					
A4329	A	External catheter start set					
A4330	A	Stool collection pouch					
A4331	A	Extension drainage tubing					
A4332	A	Lubricant for cath insertion					
A4333	A	Urinary cath anchor device					
A4334	A	Urinary cath leg strap					
A4335	A	Incontinence supply					
A4338	A	Indwelling catheter latex					
A4340	A	Indwelling catheter special					
A4344	A	Cath indw foley 2 way silicn					
A4346	A	Cath indw foley 3 way					
A4347	A	Male external catheter					
A4348	A	Male ext cath extended wear					
A4351	A	Straight tip urine catheter					
A4352	A	Coude tip urinary catheter					
A4353	A	Intermittent urinary cath					
A4354	A	Cath insertion tray w/bag					
A4355	A	Bladder irrigation tubing					
A4356	A	Ext ureth clmp or compr dvc					
A4357	A	Bedside drainage bag					
A4358	A	Urinary leg bag					
A4359	A	Urinary suspensory w/o leg b					
A4361	A	Ostomy face plate					
A4362	A	Solid skin barrier					
A4364	A	Ostomy/cath adhesive					
A4365	A	Ostomy adhesive remover wipe					
A4367	A	Ostomy belt					
A4368	A	Ostomy filter					
A4369	A	Skin barrier liquid per oz					
A4370	A	Skin barrier paste per oz					
A4371	A	Skin barrier powder per oz					
A4372	A	Skin barrier solid 4x4 equiv					
A4373	A	Skin barrier with flange					
A4374	A	Skin barrier extended wear					
A4375	A	Drainable plastic pch w fcpl					
A4376	A	Drainable rubber pch w fcplt					
A4377	A	Drainable plstic pch w/o fp					
A4378	A	Drainable rubber pch w/o fp					
A4379	A	Urinary plastic pouch w fcpl					

CPT codes and descriptions only are copyright American Medical Association. All Rights Reserved. Applicable FARS/DFARS Apply.
Copyright American Dental Association. All rights reserved.
*Code is new in 2001.

ADDENDUM B.—HOSPITAL OUTPATIENT DEPARTMENT (HOPD) PAYMENT STATUS BY HCPCS CODE AND RELATED INFORMATION—Continued

CPT/ HCPCS	HOPD Status Indicator	Description	APC	Relative Weight	Payment Rate	National Unadjusted Coinsurance	Minimum Unadjusted Coinsurance
A4380	A	Urinary rubber pouch w fcplt					
A4381	A	Urinary plastic pouch w/o fp					
A4382	A	Urinary hvy plstc pch w/o fp					
A4383	A	Urinary rubber pouch w/o fp					
A4384	A	Ostomy faceplt/silicone ring					
A4385	A	Ost skn barrier sld ext wear					
A4386	A	Ost skn barrier w flng ex wr					
A4387	A	Ost clsd pouch w att st barr					
A4388	A	Drainable pch w ex wear barr					
A4389	A	Drainable pch w st wear barr					
A4390	A	Drainable pch ex wear convex					
A4391	A	Urinary pouch w ex wear barr					
A4392	A	Urinary pouch w st wear barr					
A4393	A	Urine pch w ex wear bar conv					
A4394	A	Ostomy pouch liq deodorant					
A4395	A	Ostomy pouch solid deodorant					
A4396	A	Peristomal hernia supprt blt					
A4397	A	Irrigation supply sleeve					
A4398	A	Ostomy irrigation bag					
A4399	A	Ostomy irrig cone/cath w brs					
A4400	A	Ostomy irrigation set					
A4402	A	Lubricant per ounce					
A4404	A	Ostomy ring each					
A4421	A	Ostomy supply misc					
A4454	A	Tape all types all sizes					
A4455	A	Adhesive remover per ounce					
A4460	A	Elastic compression bandage					
A4462	A	Abdmnl drssng holder/binder					
A4464	A	Joint support device/garment					
A4465	A	Non-elastic extremity binder					
A4470	A	Gravlee jet washer					
A4480	A	Vabra aspirator					
A4481	A	Tracheostoma filter					
A4483	A	Moisture exchanger					
A4490	E	Above knee surgical stocking					
A4495	E	Thigh length surg stocking					
A4500	E	Below knee surgical stocking					
A4510	E	Full length surg stocking					
A4550	E	Surgical trays					
A4554	E	Disposable underpads					
A4556	A	Electrodes, pair					
A4557	A	Lead wires, pair					
A4558	A	Conductive paste or gel					
A4560D	A	Pessary					
A4561	N	Pessary rubber, any type					
A4562	N	Pessary, non rubber,any type					
A4565	A	Slings					
A4570	N	Splint					
A4572	A	Rib belt					
A4575	E	Hyperbaric o2 chamber disps					
A4580	N	Cast supplies (plaster)					
A4590	N	Special casting material					
A4595	A	TENS suppl 2 lead per month					
A4608	A	Transtracheal oxygen cath					
A4611	A	Heavy duty battery					
A4612	A	Battery cables					
A4613	A	Battery charger					
A4614	A	Hand-held PEFR meter					
A4615	A	Cannula nasal					
A4616	A	Tubing (oxygen) per foot					
A4617	A	Mouth piece					
A4618	A	Breathing circuits					
A4619	A	Face tent					
A4620	A	Variable concentration mask					
A4621	A	Tracheotomy mask or collar					
A4622	A	Tracheostomy or larngectomy					
A4623	A	Tracheostomy inner cannula					
A4624	A	Tracheal suction tube					
A4625	A	Trach care kit for new trach					
A4626	A	Tracheostomy cleaning brush					
A4627	E	Spacer bag/reservoir					
A4628	A	Oropharyngeal suction cath					
A4629	A	Tracheostomy care kit					
A4630	A	Repl bat t.e.n.s. own by pt					

CPT codes and descriptions only are copyright American Medical Association. All Rights Reserved. Applicable FARS/DFARS Apply.
Copyright American Dental Association. All rights reserved.
*Code is new in 2001.

ADDENDUM B.—HOSPITAL OUTPATIENT DEPARTMENT (HOPD) PAYMENT STATUS BY HCPCS CODE AND RELATED INFORMATION—Continued

CPT/ HCPCS	HOPD Status Indicator	Description	APC	Relative Weight	Payment Rate	National Unadjusted Coinsurance	Minimum Unadjusted Coinsurance
A4631	A	Wheelchair battery					
A4635	A	Underarm crutch pad					
A4636	A	Handgrip for cane etc					
A4637	A	Repl tip cane/crutch/walker					
A4640	A	Alternating pressure pad					
A4641	N	Diagnostic imaging agent					
A4642	G	Satumomab pendetide per dose	0704		$712.50		$86.93
A4643	N	High dose contrast MRI					
A4644	N	Contrast 100-199 MGs iodine					
A4645	N	Contrast 200-299 MGs iodine					
A4646	N	Contrast 300-399 MGs iodine					
A4647	N	Supp- paramagnetic contr mat					
A4649	A	Surgical supplies					
A4650	A	Supp esrd centrifuge					
A4655	A	Esrd syringe/needle					
A4660	A	Esrd blood pressure device					
A4663	A	Esrd blood pressure cuff					
A4670	E	Auto blood pressure monitor					
A4680	A	Activated carbon filters					
A4690	A	Dialyzers					
A4700	A	Standard dialysate solution					
A4705	A	Bicarb dialysate solution					
A4712	A	Sterile water					
A4714	A	Treated water for dialysis					
A4730	A	Fistula cannulation set dial					
A4735	A	Local/topical anesthetics					
A4740	A	Esrd shunt accessory					
A4750	A	Arterial or venous tubing					
A4755	A	Arterial and venous tubing					
A4760	A	Standard testing solution					
A4765	A	Dialysate concentrate					
A4770	A	Blood testing supplies					
A4771	A	Blood clotting time tube					
A4772	A	Dextrostick/glucose strips					
A4773	A	Hemostix					
A4774	A	Ammonia test paper					
A4780	A	Esrd sterilizing agent					
A4790	A	Esrd cleansing agents					
A4800	A	Heparin/antidote dialysis					
A4820	A	Supplies hemodialysis kit					
A4850	A	Rubber tipped hemostats					
A4860	A	Disposable catheter caps					
A4870	A	Plumbing/electrical work					
A4880	A	Water storage tanks					
A4890	A	Contracts/repair/maintenance					
A4900	A	Capd supply kit					
A4901	A	Ccpd supply kit					
A4905	A	Ipd supply kit					
A4910	A	Esrd nonmedical supplies					
A4912	A	Gomco drain bottle					
A4913	A	Esrd supply					
A4914	A	Preparation kit					
A4918	A	Venous pressure clamp					
A4919	A	Supp dialysis dialyzer holde					
A4920	A	Harvard pressure clamp					
A4921	A	Measuring cylinder					
A4927	A	Gloves					
A5051	A	Pouch clsd w barr attached					
A5052	A	Clsd ostomy pouch w/o barr					
A5053	A	Clsd ostomy pouch faceplate					
A5054	A	Clsd ostomy pouch w/flange					
A5055	A	Stoma cap					
A5061	A	Pouch drainable w barrier at					
A5062	A	Drnble ostomy pouch w/o barr					
A5063	A	Drain ostomy pouch w/flange					
A5064	E	Drain ostomy pouch w/fceplte					
A5065D	E	Drain ostomy pouch w/fceplte					
A5071	A	Urinary pouch w/barrier					
A5072	A	Urinary pouch w/o barrier					
A5073	A	Urinary pouch on barr w/flng					
A5074	E	Urinary pouch w/faceplate					
A5075	E	Urinary pouch on faceplate					
A5081	A	Continent stoma plug					
A5082	A	Continent stoma catheter					

CPT codes and descriptions only are copyright American Medical Association. All Rights Reserved. Applicable FARS/DFARS Apply.
Copyright American Dental Association. All rights reserved.
*Code is new in 2001.

ADDENDUM B.—HOSPITAL OUTPATIENT DEPARTMENT (HOPD) PAYMENT STATUS BY HCPCS CODE AND RELATED INFORMATION—Continued

CPT/ HCPCS	HOPD Status Indicator	Description	APC	Relative Weight	Payment Rate	National Unadjusted Coinsurance	Minimum Unadjusted Coinsurance
A5093	A	Ostomy accessory convex inse					
A5102	A	Bedside drain btl w/wo tube					
A5105	A	Urinary suspensory					
A5112	A	Urinary leg bag					
A5113	A	Latex leg strap					
A5114	A	Foam/fabric leg strap					
A5119	A	Skin barrier wipes box pr 50					
A5121	A	Solid skin barrier 6x6					
A5122	A	Solid skin barrier 8x8					
A5123	A	Skin barrier with flange					
A5126	A	Disk/foam pad +or- adhesive					
A5131	A	Appliance cleaner					
A5149D	A	Incontinence/ostomy supply					
A5200	A	Percutaneous catheter anchor					
A5500	A	Diab shoe for density insert					
A5501	A	Diabetic custom molded shoe					
A5502	A	Diabetic shoe density insert					
A5503	A	Diabetic shoe w/roller/rockr					
A5504	A	Diabetic shoe with wedge					
A5505	A	Diab shoe w/metatarsal bar					
A5506	A	Diabetic shoe w/off set heel					
A5507	A	Modification diabetic shoe					
A5508	A	Diabetic deluxe shoe					
A6020	A	Collagen wound dressing					
A6021	A	Collagen dressing <=16 sq in					
A6022	A	Collagen drsg>6<=48 sq in					
A6023	A	Collagen dressing >48 sq in					
A6024	A	Collagen dsg wound filler					
A6025	E	Silicone gel sheet, each					
A6154	A	Wound pouch each					
A6196	A	Alginate dressing <=16 sq in					
A6197	A	Alginate drsg >16 <=48 sq in					
A6198	A	alginate dressing > 48 sq in					
A6199	A	Alginate drsg wound filler					
A6200	A	Compos drsg <=16 no border					
A6201	A	Compos drsg >16<=48 no bdr					
A6202	A	Compos drsg >48 no border					
A6203	A	Composite drsg <= 16 sq in					
A6204	A	Composite drsg >16<=48 sq in					
A6205	A	Composite drsg > 48 sq in					
A6206	A	Contact layer <= 16 sq in					
A6207	A	Contact layer >16<= 48 sq in					
A6208	A	Contact layer > 48 sq in					
A6209	A	Foam drsg <=16 sq in w/o bdr					
A6210	A	Foam drg >16<=48 sq in w/o b					
A6211	A	Foam drg > 48 sq in w/o brdr					
A6212	A	Foam drg <=16 sq in w/border					
A6213	A	Foam drg >16<=48 sq in w/bdr					
A6214	A	Foam drg > 48 sq in w/border					
A6215	A	Foam dressing wound filler					
A6216	A	Non-sterile gauze<=16 sq in					
A6217	A	Non-sterile gauze>16<=48 sq					
A6218	A	Non-sterile gauze > 48 sq in					
A6219	A	Gauze <= 16 sq in w/border					
A6220	A	Gauze >16 <=48 sq in w/bordr					
A6221	A	Gauze > 48 sq in w/border					
A6222	A	Gauze <=16 in no w/sal w/o b					
A6223	A	Gauze >16<=48 no w/sal w/o b					
A6224	A	Gauze > 48 in no w/sal w/o b					
A6228	A	Gauze <= 16 sq in water/sal					
A6229	A	Gauze >16<=48 sq in watr/sal					
A6230	A	Gauze > 48 sq in water/salne					
A6231	A	Hydrogel dsg<=16 sq in					
A6232	A	Hydrogel dsg>16<=48 sq in					
A6233	A	Hydrogel dressing >48 sq in					
A6234	A	Hydrocolld drg <=16 w/o bdr					
A6235	A	Hydrocolld drg >16<=48 w/o b					
A6236	A	Hydrocolld drg > 48 in w/o b					
A6237	A	Hydrocolld drg <=16 in w/bdr					
A6238	A	Hydrocolld drg >16<=48 w/bdr					
A6239	A	Hydrocolld drg > 48 in w/bdr					
A6240	A	Hydrocolld drg filler paste					
A6241	A	Hydrocolloid drg filler dry					
A6242	A	Hydrogel drg <=16 in w/o bdr					

CPT codes and descriptions only are copyright American Medical Association. All Rights Reserved. Applicable FARS/DFARS Apply.
Copyright American Dental Association. All rights reserved.
*Code is new in 2001.

ADDENDUM B.—HOSPITAL OUTPATIENT DEPARTMENT (HOPD) PAYMENT STATUS BY HCPCS CODE AND RELATED INFORMATION—Continued

CPT/ HCPCS	HOPD Status Indicator	Description	APC	Relative Weight	Payment Rate	National Unadjusted Coinsurance	Minimum Unadjusted Coinsurance
A6243	A	Hydrogel drg >16<=48 w/o bdr					
A6244	A	Hydrogel drg >48 in w/o bdr					
A6245	A	Hydrogel drg <= 16 in w/bdr					
A6246	A	Hydrogel drg >16<=48 in w/b					
A6247	A	Hydrogel drg > 48 sq in w/b					
A6248	A	Hydrogel drsg gel filler					
A6250	A	Skin seal protect moisturizr					
A6251	A	Absorpt drg <=16 sq in w/o b					
A6252	A	Absorpt drg >16 <=48 w/o bdr					
A6253	A	Absorpt drg > 48 sq in w/o b					
A6254	A	Absorpt drg <=16 sq in w/bdr					
A6255	A	Absorpt drg >16<=48 in w/bdr					
A6256	A	Absorpt drg > 48 sq in w/bdr					
A6257	A	Transparent film <= 16 sq in					
A6258	A	Transparent film >16<=48 in					
A6259	A	Transparent film > 48 sq in					
A6260	A	Wound cleanser any type/size					
A6261	A	Wound filler gel/paste /oz					
A6262	A	Wound filler dry form / gram					
A6263	A	Non-sterile elastic gauze/yd					
A6264	A	Non-sterile no elastic gauze					
A6265	A	Tape per 18 sq inches					
A6266	A	Impreg gauze no h2O/sal/yard					
A6402	A	Sterile gauze <= 16 sq in					
A6403	A	Sterile gauze>16 <= 48 sq in					
A6404	A	Sterile gauze > 48 sq in					
A6405	A	Sterile elastic gauze /yd					
A6406	A	Sterile non-elastic gauze/yd					
A7000	A	Disposable canister for pump					
A7001	A	Nondisposable pump canister					
A7002	A	Tubing used w suction pump					
A7003	A	Nebulizer administration set					
A7004	A	Disposable nebulizer sml vol					
A7005	A	Nondisposable nebulizer set					
A7006	A	Filtered nebulizer admin set					
A7007	A	Lg vol nebulizer disposable					
A7008	A	Disposable nebulizer prefill					
A7009	A	Nebulizer reservoir bottle					
A7010	A	Disposable corrugated tubing					
A7011	A	Nondispos corrugated tubing					
A7012	A	Nebulizer water collec devic					
A7013	A	Disposable compressor filter					
A7014	A	Compressor nondispos filter					
A7015	A	Aerosol mask used w nebulize					
A7016	A	Nebulizer dome & mouthpiece					
A7017	A	Nebulizer not used w oxygen					
A7018	A	Water distilled w/nebulizer					
A7019	A	Saline solution dispenser					
A7020	A	Sterile H2O or NSS w lgv neb					
A7501	A	Tracheostoma valve w diaphra					
A7502	A	Replacement diaphragm/fplate					
A7503	A	HMES filter holder or cap					
A7504	A	Tracheostoma HMES filter					
A7505	A	HMES or trach valve housing					
A7506	A	HMES/trachvalve adhesivedisk					
A7507	A	Integrated filter & holder					
A7508	A	Housing & Integrated Adhesiv					
A7509	A	Heat & moisture exchange sys					
A9150	E	Misc/exper non-prescript dru					
A9160	E	Podiatrist non-covered servi					
A9170	E	Chiropractor non-covered ser					
A9190	E	Misc/expe personal comfort i					
A9270	E	Non-covered item or service					
A9300	E	Exercise equipment					
*A9500	G	Technetium TC 99m sestamibi	1600		$109.25		$13.33
A9502	G	Technetium TC99M tetrofosmin	0705		$136.80		$16.69
*A9503	G	Technetium TC 99m medronate	1601		$38.38		$4.68
*A9504	G	Technetium tc 99m apcitide	1602		$47.50		$5.80
*A9505	G	Thallous chloride TL 201/mci	1603		$28.50		$3.48
*A9507	G	Indium/111 capromab pendetid	1604		$1,008.90		$135.19
A9508	G	Iobenguane sulfate I-131	1045		$1,140.00		$139.08
A9510	G	Technetium TC99m Disofenin	1205		$427.50		$57.29
A9600	G	Strontium-89 chloride	0701		$783.75		$95.62
A9605	G	Samarium sm153 lexidronamm	0702		$942.09		$134.87

CPT codes and descriptions only are copyright American Medical Association. All Rights Reserved. Applicable FARS/DFARS Apply.
Copyright American Dental Association. All rights reserved.
*Code is new in 2001.

ADDENDUM B.—HOSPITAL OUTPATIENT DEPARTMENT (HOPD) PAYMENT STATUS BY HCPCS CODE AND RELATED INFORMATION—Continued

CPT/ HCPCS	HOPD Status Indicator	Description	APC	Relative Weight	Payment Rate	National Unadjusted Coinsurance	Minimum Unadjusted Coinsurance
A9700	N	Echocardiography Contrast					
A9900	E	Supply/accessory/service					
A9901	E	Delivery/set up/dispensing					
B4034	A	Enter feed supkit syr by day					
B4035	A	Enteral feed supp pump per d					
B4036	A	Enteral feed sup kit grav by					
B4081	A	Enteral ng tubing w/ stylet					
B4082	A	Enteral ng tubing w/o stylet					
B4083	A	Enteral stomach tube levine					
B4084	A	Gastrostomy/jejunostomy tubi					
B4085	A	Gastrostomy tube w/ring each					
B4150	A	Enteral formulae category i					
B4151	A	Enteral formulae category i-					
B4152	A	Enteral formulae category ii					
B4153	A	Enteral formulae category ii					
B4154	A	Enteral formulae category IV					
B4155	A	Enteral formulae category v					
B4156	A	Enteral formulae category vi					
B4164	A	Parenteral 50% dextrose solu					
B4168	A	Parenteral sol amino acid 3.					
B4172	A	Parenteral sol amino acid 5.					
B4176	A	Parenteral sol amino acid 7-					
B4178	A	Parenteral sol amino acid >					
B4180	A	Parenteral sol carb > 50%					
B4184	A	Parenteral sol lipids 10%					
B4186	A	Parenteral sol lipids 20%					
B4189	A	Parenteral sol amino acid &					
B4193	A	Parenteral sol 52-73 gm prot					
B4197	A	Parenteral sol 74-100 gm pro					
B4199	A	Parenteral sol > 100gm prote					
B4216	A	Parenteral nutrition additiv					
B4220	A	Parenteral supply kit premix					
B4222	A	Parenteral supply kit homemi					
B4224	A	Parenteral administration ki					
B5000	A	Parenteral sol renal-amirosy					
B5100	A	Parenteral sol hepatic-fream					
B5200	A	Parenteral sol stres-brnch c					
B9000	A	Enter infusion pump w/o alrm					
B9002	A	Enteral infusion pump w/ ala					
B9004	A	Parenteral infus pump portab					
B9006	A	Parenteral infus pump statio					
B9998	A	Enteral supp not otherwise c					
B9999	A	Parenteral supp not othrws c					
C1000	H	PerclosClosr ProstarArt Vas	1000				
C1001	H	AcuNav-diagnstic ultrsnd ca	1001				
C1003	H	Cath, ablation, Livewire TC	1003				
C1004	H	Fast-Cath,Swartz,SAFL,CSTA	1004				
C1005D	E	Sensar IOL					
C1006	H	ARRAY post chamb IOL	1006				
C1007	H	Ams 700 penile prosthesis	1007				
C1008	H	Urolume-implt uretheral stent	1008				
C1009	K	Plasma, cryoprecipitate-reduced, unit	1009	0.86	$42.76		$8.55
C1010	K	Blood, L/R, CMV-neg	1010	2.88	$142.84		$28.57
C1011	K	Platelets, L/R, CMV-neg, unit	1011	11.86	$588.15		$117.63
C1012	K	Platelet concentrate, L/R, irradiated, unit	1012	1.92	$95.23		$19.05
C1013	K	Platelet concentrate, L/R, unit	1013	1.18	$58.30		$11.66
C1014	K	Platelets, aph/pher, L/R, unit	1014	8.93	$443.11		$88.62
C1016	K	Blood, L/R, froz/deglycerol/washed	1016	7.15	$354.68		$70.94
C1017	K	Platelets, aph/pher, L/R, CMV-neg, unit	1017	9.33	$462.54		$92.51
C1018	K	Blood, L/R, irradiated	1018	3.13	$155.48		$31.10
C1019	K	Platelets, aph/pher, L/R, irradiated, unit	1019	9.64	$478.09		$95.62
C1024	J	Quinupristin 150 mg/dalfopriston 350 mg	1024		$159.60		$20.50
C1025	H	Marinr CS Cath	1025				
C1026	H	RF Perfrmr cath 5F RF Marinr	1026				
C1027	H	Magic x/short, Radius14mm	1027				
C1028	H	Prcis Twst trnsvg anch sys	1028				
C1029	H	CRE guided balloon dil cath	1029				
C1030	H	Cthtr:Mrshal,Blu Max Utr Dmnd	1030				
C1031D	E	MR Comp/mod LeVeen ned elect					
C1033	H	Sonicath mdl 37-410	1033				
C1034	H	SURPASS, Long30 SURPASS-cath	1034				
C1035	H	Cath, Ultra ICE	1035				
C1036	H	R port/reservoir impl dev	1036				
C1037	H	Vaxcelchronic dialysis cath	1037				

CPT codes and descriptions only are copyright American Medical Association. All Rights Reserved. Applicable FARS/DFARS Apply.
Copyright American Dental Association. All rights reserved.
*Code is new in 2001.

ADDENDUM B.—HOSPITAL OUTPATIENT DEPARTMENT (HOPD) PAYMENT STATUS BY HCPCS CODE AND RELATED INFORMATION—Continued

CPT/ HCPCS	HOPD Status Indicator	Description	APC	Relative Weight	Payment Rate	National Unadjusted Coinsurance	Minimum Unadjusted Coinsurance
C1038	H	UltraCross Imaging Cath	1038				
C1039	H	Wallstent, tracheobronchial	1039				
C1040	H	WALLSTENT: TIPS (shunt)	1040				
C1042	H	Wallstent, biliary	1042				
C1043	H	Atherectomy sys, coronary	1043				
C1045	G	I-131 MIBG (ioben-sulfate) O.5mCi	1045		$1,140.00		$139.08
C1047	H	Noga/Navi-Star cath	1047				
C1048	H	NeuroCyberneticPros: gen	1048				
C1050	H	Prosorba column	1410				
C1051	H	Oasis Thrombectomy Cath	1051				
C1053	H	EnSite 3000 catheter	1053				
C1054	H	Hydrolyser Thromb Cath 6/7F	1054				
C1055	H	Transesoph 210, 210-S Cath	1055				
C1056	H	Thermachoice II Cath	1056				
C1057	H	Micromark Tissue Marker	1057				
C1059	G	Carticel,auto cult-chndr cyte	1059		$14,250.00		$2,010.00
C1060	H	ACS multi-link tristor/ultra	1060				
*C1061	H	ACS Viking Guiding cath	1061				
*C1063	H	EndoTak Endurance EZ, RX lead	1063				
*C1067	H	Megalink biliary stent	1067				
*C1068	H	Pulsar DDD pmkr	1068				
*C1069	H	Discovery DR, pmaker	1069				
*C1071	H	Pulsar Max, Pulsar SR pmkr	1071				
*C1072	H	Guidant: blln dil cath	1072				
*C1073	H	Morcellator	1073				
*C1074	H	RX/OTW Viatrac-peri dil cath	1074				
*C1075	H	Guidant: lead	1075				
*C1076	H	Ventak mini sc defib	1076				
*C1077	H	Ventak VR Prizm VR, sc defib	1077				
*C1078	H	Ventak: Prizm, AVIIIDR defib	1078				
*C1079	G	CO 57/58 0.5 mCi	1079		$264.10		$32.22
*C1084	G	Denileukin diftitox, 300 mcg	1084		$942.88		$126.35
*C1086	G	Temozolomide, 5 mg	1086		$5.70		$.76
*C1087	G	I-123 per uCi capsule	1087		$.84		$.10
*C1088	T	LaserOptic tx sys	0980	38.67	$1,917.89		$383.58
*C1089	G	CO 57, 0.5 mCi	1089		$91.20		$11.13
*C1090	G	IN 111 Chloride, per mCi	1090		$152.00		$18.54
*C1091	G	IN 111 Oxyquinoline, per 5 mCi	1091		$508.25		$62.01
*C1092	G	IN 111 Pentetate, per 1.5 mCi	1092		$769.50		$93.88
*C1094	J	TC 99M Albumin aggr, per vial	1094		$102.05		$13.67
*C1095	G	TC 99M Depreotide, per vial	1095		$760.00		$101.84
*C1096	G	TC 99M Exametazime, per dose	1096		$34.20		$4.17
*C1097	G	TC 99M Mebrofenin, per vial	1097		$445.31		$63.75
*C1098	G	TC 99M Pentetate, per vial	1098		$46.76		$5.71
*C1099	J	TC 99M Pyrophosphate, per vial	1099		$42.75		$5.22
*C1100	H	Medtronic AVE GT1 guidewire	1100				
*C1101	H	MedtronicAVE Zuma guidecath	1101				
*C1102	H	Syngergy Neurostim Genrtr	1102				
*C1103	H	Micro Jewel Defibrillator	1103				
*C1104	H	RF Conductor Ablative Cath	1104				
*C1105	H	Sigma 300VDD pacmker	1105				
*C1106	H	SynergyEZ Pt Progrmr	1106				
*C1107	H	Torqr, Solist cath	1107				
*C1109	H	Implantable anchor: Ethicon	1109				
*C1110	H	Stable Mapper, cath electrd	1110				
*C1111	H	AneuRxAort-Uni-Ilicstnt&cath	1111				
*C1112	H	AneuRx Stent graft/del.cath	1112				
*C1113	H	Tlnt Endo Sprng Stnt Grft Sys	1113				
*C1114	H	TalntSprgStnt+Graf endo pros	1114				
*C1115	H	5038S,5038,5038L pace lead	1115				
*C1116	H	CapSureSP pacing Lead	1116				
*C1117	H	Ancure Endograft Del Sys	1117				
*C1118	H	Sigma300DR LegIIDR,pacemkr	1118				
*C1119	H	Sprint6932,6943 defib lead	1119				
*C1120	H	Sprint6942,6945 defib lead	1120				
*C1121	H	Gem defibrillator	1121				
*C1122	G	TC 99M arcitumomab per dose	1122		$22.80		$2.78
*C1123	H	Gem II VR defibrillator	1123				
*C1124	H	InterStim Test Stim Kit	1124				
*C1125	H	Kappa 400SR,Ttopaz II SR pmkr	1125				
*C1126	H	Kappa 700 DR pacemakr	1126				
*C1127	H	Kappa 700SR,pmkr sgl chamber	1127				
*C1128	H	Kappa 700D,Ruby IID pmkr	1128				
*C1129	H	Kappa 700VDD,pacmkr	1129				

CPT codes and descriptions only are copyright American Medical Association. All Rights Reserved. Applicable FARS/DFARS Apply.
Copyright American Dental Association. All rights reserved.
*Code is new in 2001.

ADDENDUM B.—HOSPITAL OUTPATIENT DEPARTMENT (HOPD) PAYMENT STATUS BY HCPCS CODE AND RELATED INFORMATION—Continued

CPT/ HCPCS	HOPD Status Indicator	Description	APC	Relative Weight	Payment Rate	National Unadjusted Coinsurance	Minimum Unadjusted Coinsurance
*C1130	H	Sigm200D,LGCY IID sc pmkr	1130				
*C1131	H	Sigma 200DR, pmker	1131				
*C1132	H	Sigma300,200SR Leg II:sc pac	1132				
*C1133	H	Sigma SR, Vita SR, pmaker	1133				
*C1134	H	Sigma 300D pmker	1134				
*C1135	H	Entity DR 5326L/R	1135				
*C1136	H	Affinity DR 5330L/R	1136				
*C1137	H	CardioSEAL implant syst	1137				
*C1143	H	AddVent mod 2060BL,VDD	1143				
*C1144	H	Afnty SR 5130,Integrity SR,pmkr	1144				
*C1145	H	Angio-Seal 6fr, 8fr	1145				
C1146D	E	VETT tube					
*C1147	H	AV Plus DX 1368: lead	1147				
*C1148	H	Contour MD sc defib	1148				
*C1149	H	Entity DC 5226R, 5226 pmkr	1149				
*C1151	H	Passiveplus DX lead, 10mdls	1151				
*C1152	H	LifeSite Access System	1152				
*C1153	H	Regency SC+ 2402L pmker	1153				
*C1154	H	SPL:SPOI,02,04- defib lead	1154				
*C1155	H	Repliform 8 sq cm	1155				
*C1156	H	Tr 1102TrSR+ 2260L,2264L,5131	1156				
*C1157	H	Trilogy DCT 2318L pmkr	1157				
*C1158	H	TVL lead SV01,SV02,SV04	1158				
*C1159	H	TVL RV02,RV06,RV07: lead	1159				
*C1160	H	TVL-ADX 1559: lead	1160				
*C1161	H	Tendril DX, 1388 pacing lead	1161				
*C1162	H	TempoDr, TrilogyDR+DC pmkr	1162				
*C1163	H	Tendril SDX, 1488T pacing lead	1163				
*C1164	H	Iodine-125 brachytx seed	1164				
*C1166	G	Cytarabine liposomal, 10 mg	1166		$371.45		$49.77
*C1167	J	Epirubicin hcl, 2 mg	1167		$24.94		$3.34
C1170D	E	ABBI disp biopsy device					
*C1171	H	Autosuture site marker stple	1171				
*C1172	H	Spacemaker dissect ballon	1172				
*C1173	H	Cor stnt S540, S670, o-wire stn	1173				
*C1174	H	Bard brachytx needle	1174				
C1175D	E	Biopsy device, MIBB Device					
C1176D	E	Mammotome HH Probe w/Vac Sys					
C1177D	E	11-G Mammotome Probe					
*C1178	G	Busulfan IV, 6 mg	1178		$26.48		$3.55
C1179D	E	14-G Mammotome Probe					
*C1180	H	Vigor SR, SC, pmkr	1180				
*C1181	H	Meridian SSI, SC, pmkr	1181				
*C1182	H	Pulsar SSI, SC, pmkr	1182				
*C1183	H	Jade IIS, Sigma 300S,SC, pmkr	1183				
*C1184	H	Sigma 200S, SC, pmkr	1184				
*C1188	G	I 131, per mCi	1188		$5.86		$.75
*C1200	G	TC 99M Sodium Glucoheptonate, per vial	1200		$113.05		$13.79
*C1201	G	TC 99M succimer, per vial	1201		$135.66		$16.55
*C1202	G	TC 99M Sulfur Colloid, per dose	1202		$38.00		$4.64
*C1203	G	Verteporfin for Injection	1203		$1,458.25		$195.41
*C1205	G	TC 99M Disofenin, per vial	1205		$427.50		$57.29
*C1207	G	Octreotide acetate depot 1mg	1207		$135.10		$16.48
*C1300	S	Hyperbaric O2 per 30 min under pressure	0971	1.55	$76.88		$15.38
*C1302	H	Lead, defibrillator, TVL SQ01	1302				
*C1303	H	CapSure Fix 6940/4068-110, lead	1303				
*C1304	H	Sonicath mdl 37-416,-418	1304				
*C1305	G	Apligraf	1305		$1,157.81		$163.31
*C1306	H	NeuroCyberneticPros: lead	1306				
*C1311	H	Trilogy DR+/DAO pmkr	1311				
*C1312	H	Magic WALLSTENTstent-Mini	1312				
*C1313	H	Magic medium, Radius 31mm	1313				
*C1314	H	Magic WALLSTENT stent-Long	1314				
*C1315	H	Vigor DR, Meridian DR pmkr	1315				
*C1316	H	Meridian DDD pmkr	1316				
*C1317	H	Discovery SR, pmkr	1317				
*C1318	H	Meridian SR pmakr	1318				
*C1319	H	WALLSTENT: enteral	1319				
*C1320	H	WALLSTENT:iliac	1320				
C1321D	E	Palate/Base of Tongue electr					
C1322D	E	Turbinate Somnoplasty electr					
C1323D	E	VAPR/T disp electrode					
C1324D	E	Ligasure disposable electrode					
*C1325	H	Pallidium -103 seed	1325				

CPT codes and descriptions only are copyright American Medical Association. All Rights Reserved. Applicable FARS/DFARS Apply.
Copyright American Dental Association. All rights reserved.
*Code is new in 2001.

ADDENDUM B.—HOSPITAL OUTPATIENT DEPARTMENT (HOPD) PAYMENT STATUS BY HCPCS CODE AND RELATED INFORMATION—Continued

CPT/ HCPCS	HOPD Status Indicator	Description	APC	Relative Weight	Payment Rate	National Unadjusted Coinsurance	Minimum Unadjusted Coinsurance
*C1326	H	Angio-jet rheolytic thromb cath	1326				
*C1328	H	ANS Renew NS trnsmtr	1328				
C1329D	E	Versapoint disp electrode					
*C1333	H	PALMAZ Corinthian bill stent	1333				
*C1334	H	Crown,Mini-crown,CrossLC	1334				
*C1335	H	Mesh, Prolene	1335				
*C1336	H	Constant Flow Imp Pump	1336				
*C1337	H	IsoMed 8472-20/35/60	1337				
*C1348	G	I 131 per mCi solution	1348		$146.57		$17.88
*C1350	H	ProstaSeed, I125, per source	1350				
*C1351	H	CapSure Fix lead	1351				
*C1352	H	Gem II defib	1352				
*C1353	H	Itrel Interstm neurostim+ext	1353				
*C1354	H	Kappa 400DR,Diamond II 820DR	1354				
*C1355	H	Kappa 600DR, Vita DR	1355				
*C1356	H	Profile MD V-186HV3 sc defib	1356				
*C1357	H	Angstrom MD V-190HV3 sc defib	1357				
*C1358	H	Affinity DC 5230R, 5230 pmkr	1358				
*C1359	H	Pulsar,Pulsar Max DR,pmkr	1359				
*C1360D	T	Ocular photodynamic therapy	0235	2.94	$145.81	$78.91	$29.16
*C1361	H	Reveal Cardiac Recorder	1108				
*C1362	H	Herculink,OTW SDS bil stent	1411				
*C1363	H	Gem DR, DC, defib	1363				
*C1364	H	Photon DR V-230HV3 DC defib	1364				
*C1365	H	Guidewire, Hi-Torque14/18/35	1365				
*C1366	H	Guidewire,PTCA, Hi-Torque	1366				
*C1367	H	Guidewire, Hi-Torque CrossIt	1367				
C1368D	E	On-Q Pain Mgt Sys					
*C1369	H	ANS Renew Stim Sys recvr	1369				
*C1370	H	Tension-Free Vaginal Tape	1370				
*C1371	H	Symp Nitinol Transhep Bil Sys	1371				
*C1372	H	Cordis Nitinol bil stent	1372				
*C1375	H	Stent, coronary, NIR	1375				
*C1376	H	ANS Renew Stim Sys lead/ex	1376				
*C1377	H	Specify 3988 neuro lead	1377				
*C1378	H	InterStim Tx 3080/3886 lead	1378				
*C1379	H	Pisces-Quad 3887 lead	1379				
*C1420	H	StapleTac2 Bone w/Dermis	1420				
*C1421	H	StapleTac2 Bone wo Dermis	1421				
*C1450	H	Orthosphere Arthroplasty	1450				
*C1451	H	Orthosphere Arthroplasty Kit	1451				
*C1500	H	Atherectomy sys, peripheral	1500				
*C1700	H	Authen Mick TP brachy needle	1700				
*C1701	H	Medtec MT-BT-5201 -25 ndl	1701				
*C1702	H	WWMT brachytx needle	1702				
*C1703	H	Mentor Prostate Brachy	1703				
*C1704	H	MT-BT-5001-25/5051-25	1704				
*C1705	H	Best Flexi Brachy Needle	1705				
*C1706	H	Indigo Prostate Seeding Ndl	1706				
*C1707	H	Varisource Implt Ndl	1707				
*C1708	H	UroMed Prostate Seed Ndl	1708				
*C1709	H	Remington Brachytx Needle	1709				
*C1710	H	US Biopsy Prostate Needle	1710				
*C1711	H	MD Tech brachytx needle	1711				
*C1712	H	Imagyn brachytx needle	1712				
*C1790	H	Iridium 192 HDR	1790				
*C1791	H	OncoSeed, Rapid Strand I-125	1791				
*C1792	H	UroMed I-125 Brachy seed	1792				
*C1793	H	Bard InterSource P-103 seed	1793				
*C1794	H	Bard IsoSeed P-103 seed	1794				
*C1795	H	Bard BrachySource I-125	1795				
*C1796	H	SourceTech Med I-125	1796				
*C1797	H	Draximage I-125 seed	1797				
*C1798	H	Syncor I-125 PharmaSeed	1798				
*C1799	H	I-Plant I-125 Brachytx seed	1799				
*C1800	H	Pd-103 brachytx seed	1800				
*C1801	H	IoGold I-125 brachytx seed	1801				
*C1802	H	Brachytherapy seed, Iridium 192	1802				
*C1803	H	Best Iodine 125 brachytx sds	1803				
*C1804	H	Best Palladium 103 seeds	1804				
*C1805	H	IsoStar Iodine-125 seeds	1805				
*C1806	H	Gold 198 brachy seeds	1806				
*C1810	H	D114S Dilatation Cath	1810				
*C1811	H	Surgical Dynamics Anchors	1811				

CPT codes and descriptions only are copyright American Medical Association. All Rights Reserved. Applicable FARS/DFARS Apply.
Copyright American Dental Association. All rights reserved.
*Code is new in 2001.

ADDENDUM B.—HOSPITAL OUTPATIENT DEPARTMENT (HOPD) PAYMENT STATUS BY HCPCS CODE AND RELATED INFORMATION—Continued

CPT/ HCPCS	HOPD Status Indicator	Description	APC	Relative Weight	Payment Rate	National Unadjusted Coinsurance	Minimum Unadjusted Coinsurance
*C1812	H	OBL Anchors	1812				
*C1850	H	Repliform 14/21 sq cm	1850				
*C1851	H	Repliform 24/28 sq cm	1851				
*C1852	H	TransCyte, per 247 sq cm	1852				
*C1853	H	Suspend, per 8/14 sq cm	1853				
*C1854	H	Suspend, per 24/28 sq cm	1854				
*C1855	H	Suspend, per 36 sq cm	1855				
*C1856	H	Suspend, per 48 sq cm	1856				
*C1857	H	Suspend, per 84 sq cm	1857				
*C1858	H	DuraDerm, per 8/14 sq cm	1858				
*C1859	H	DuraDerm, per 21/24/28 sq cm	1859				
*C1860	H	DuraDerm, per 48 sq cm	1860				
*C1861	H	DuraDerm, per 36 sq cm	1861				
*C1862	H	DuraDerm, per 72 sq cm	1862				
*C1863	H	DuraDerm, per 84 sq cm	1863				
*C1864	H	SpermaTex,per 13.44 sq cm	1864				
*C1865	H	FasLata, per 8/14 sq cm	1865				
*C1866	H	FasLata, per 24/28 sq cm	1866				
*C1867	H	FasLata, per 36/48 sq cm	1867				
*C1868	H	FasLata, per 96 sq cm	1868				
*C1869	H	Gore Thyroplasty Dev	1869				
*C1870	H	DermMatrix, per 16 sq cm	1870				
*C1871	H	DermMatrix, 32 or 64 sq cm	1871				
*C1872	H	Dermagraft, per 37.5 sq cm	1872				
*C1873	H	Bard 3DMax Mesh	1873				
*C1929	H	Maverick PTCA Cath	1929				
*C1930	H	Coyote Dil Cath,20/30/40mm	1930				
*C1931	H	Talon Dil Cath	1931				
*C1932	H	Scimed Remedy Dil Cath	1932				
*C1933	H	Opti-Plast XL/Centurion Cath	1933				
*C1934	H	Ultraverse 3.5F Bal Dil Cath	1934				
*C1935	H	Workhorse PTA Bal Cath	1935				
*C1936	H	Uromax Ultra Bal Dil Cath	1936				
*C1937	H	Synergy Balloon Dil Cath	1937				
*C1938	H	UroForce Bal Dil Cath	1938				
*C1939	H	Raptor, Ninja PTCA Dil Cath	1939				
*C1940	H	PowerFlex,OPTA 5/LP Bal Cath	1940				
*C1941	H	Jupiter PTA Dil Cath	1941				
*C1942	H	Cordis Maxi LD PTA Bal Cath	1942				
*C1943	H	RXCrossSail OTW OpenSail	1943				
*C1944	H	Rapid Exchange Bil Dil Cath	1944				
*C1945	H	Savvy PTA Dil Cath	1945				
*C1946	H	R1s Rapid Dil Cath	1946				
*C1947	H	Gazelle Bal Dil Cath	1947				
*C1948	H	Pursuit Balloon Cath	1948				
*C1949	H	Oracle Megasonics Cath	1949				
*C1979	H	Visions PV/Avanar US Cath	1979				
*C1980	H	Atlantis SR Coronary Cath	1980				
*C1981	H	PTCA Catheters	1981				
*C2000	H	Orbiter ST Steerable Cath	2000				
*C2001	H	Constellation Diag Cath	2001				
*C2002	H	Irvine 5F Inquiry Diag EP Cath	2002				
*C2003	H	Irvine 6F Inquiry Diag EP Cath	2003				
*C2004	H	Biosense EP Cath--Octapolar	2004				
*C2005	H	Biosense EP Cath--Hexapolar	2005				
*C2006	H	Biosense EP Cath--Decapolar	2006				
*C2007	H	Irvine 6F Luma-Cath EP Cath	2007				
*C2008	H	Luma-Cath EP Cath 81910-15	2008				
*C2009	H	Irvine 7F Luma-Cath EP Cath	2009				
*C2010	H	Fixed Curve EP Cath	2010				
*C2011	H	Deflectable Tip Cath--Quad	2011				
*C2012	H	Celsius Abln Cath	2012				
*C2013	H	Celsius Large Abln Cath	2013				
*C2014	H	Celsius II Asym Abln Cath	2014				
*C2015	H	Celsius II Sym Abln Cath	2015				
*C2016	H	Navi-Star DS, Navi-Star Ther	2016				
*C2017	H	Navi-Star Abln Cath	2017				
*C2018	H	Polaris T Ablation Cath	2018				
*C2019	H	EP Deflectable Cath	2019				
*C2020	H	Catheter, ablation, Blazer II XP	2020				
*C2021	H	SilverFlex EP Cath	2021				
*C2022	H	CP Chilli Cooled Abln Cath	2022				
*C2023	H	Chilli Cld AblnCath-std, lg	2023				
*C2100	H	CP CS Reference Cath	2100				

CPT codes and descriptions only are copyright American Medical Association. All Rights Reserved. Applicable FARS/DFARS Apply.
Copyright American Dental Association. All rights reserved.
*Code is new in 2001.

ADDENDUM B.—HOSPITAL OUTPATIENT DEPARTMENT (HOPD) PAYMENT STATUS BY HCPCS CODE AND RELATED INFORMATION—Continued

CPT/ HCPCS	HOPD Status Indicator	Description	APC	Relative Weight	Payment Rate	National Unadjusted Coinsurance	Minimum Unadjusted Coinsurance
*C2101	H	CP RV Reference Cath	2101				
*C2102	H	CP Radii 7F EP Cath	2102				
*C2103	H	CP Radii 7F EP Cath w/Track	2103				
*C2104	H	Lasso Deflectable Cath	2104				
*C2151	H	Veripath Guiding Cath	2151				
*C2152	H	Cordis Vista Brite Tip Cath	2152				
*C2153	H	Bard Viking Cath	2153				
*C2200	H	Arrow-Trerotola PTD Cath	2200				
*C2300	H	Varisource Stnd Catheters	2300				
*C2597	H	CliniCath/kit 16/18 sgl/dbl	2597				
*C2598	H	CliniCath 18/20/24G-single	2598				
*C2599	H	CliniCath 16/18G-double	2599				
C2600D	E	Gold Probe Catheter					
*C2601	H	Bard DL Ureteral Cath	2601				
*C2602	H	Vitesse Laser Cath 1.4/1.7mm	2602				
*C2603	H	Vitesse Laser Cath 2.0mm	2603				
*C2604	H	Vitesse E Laser Cath 2.0mm	2604				
*C2605	H	Extreme Laser Catheter	2605				
*C2606	H	SpineCath XL Catheter	2606				
*C2607	H	SpineCath Intradiscal Cath	2607				
*C2608	H	Scimed 6F Wiseguide Cath	2608				
*C2609	H	Flexima Bil Drainage Cath	2609				
*C2610	H	FlexTipPlus Intraspinal Cath	2610				
*C2611	H	AlgoLine Intraspinal Cath	2611				
*C2612	H	InDura Catheter	2612				
*C2676	E	Response CV Catheter					
*C2700	H	MycroPhylax Plus SC defib	2700				
*C2701	H	Phylax XM SC defib	2701				
*C2702	H	Ventak Prizm 2 VR Defib	2702				
*C2703	H	Ventak Prizm VR HE Defib	2703				
*C2704	H	Ventak Mini IV+ Defib	2704				
*C2801	H	Defender IV DR 612 DC defib	2801				
*C2802	H	Phylax AV DC defib	2802				
*C2803	H	Ventak Prizm DR HE Defib	2803				
*C2804	H	Ventak Prizm 2 DR Defib	2804				
*C2805	H	Jewel AF 7250 Defib	2805				
*C2806	H	GEM VR 7227 Defib	2806				
*C2807	H	Contak CD 1823	2807				
*C2808	H	Contak TR 1241	2808				
*C3001	H	Kainox SL/RV defib lead	3001				
*C3002	H	EasyTrak Defib Lead	3002				
*C3003	H	Endotak SQ Array XP lead	3003				
*C3004	H	Intervene Defib Lead	3004				
*C3400	H	Siltex Spectrum,Contour Prof	3400				
*C3401	H	Saline-Filled Spectrum	3401				
*C3500	H	Mentor Alpha I Inf Penile Pros	3500				
*C3510	H	AMS 800 Urinary Pros	3510				
*C3551	H	Choice/PT Graphix/Luge/Trooper	3551				
*C3552	H	Hi-Torque Whisper	3552				
*C3553	H	Cordis guidewires	3553				
*C3554	H	Jindo guidewire	3554				
*C3555	H	Wholey Hi-Torque Plus GW	3555				
*C3556	H	Wave/FlowWire Guidewire	3556				
*C3557	H	HyTek guidewire	3557				
*C3800	H	SynchroMed EL infusion pump	3800				
*C3801	H	Arrow/MicroJect PCA Sys	3801				
*C3851	H	Elastic UV IOL AA-4203T/TF/TL	3851				
*C4000	H	Opus G 4621, 4624 SC pmkr	4000				
*C4001	H	Opus S 4121/4124 SC pmkr	4001				
*C4002	H	Talent 113 SC pmkr	4002				
*C4003	H	Kairos SR SC pmkr	4003				
*C4004	H	Actros SR, Actros SLR SC pmkr	4004				
*C4005	H	Philos SR/SR-B SC pmkr	4005				
*C4006	H	Pulsar Max II SR pmkr	4006				
*C4007	H	Marathon SR pmkr	4007				
*C4008	H	Discovery II SSI pmkr	4008				
*C4009	H	Discovery II SR pmkr	4009				
*C4300	H	Integrity AFx DR 5342 pmkr	4300				
*C4301	H	Integrity AFx DR 5346 pmkr	4301				
*C4302	H	Affinity VDR 5430 pmkr	4302				
*C4303	H	Brio 112 DC pmkr	4303				
*C4304	H	Brio 212, Talent 213/223 DC pmkr	4304				
*C4305	H	Brio 222 DC pmkr	4305				
*C4306	H	Brio 220 DC pmkr	4306				

CPT codes and descriptions only are copyright American Medical Association. All Rights Reserved. Applicable FARS/DFARS Apply.
Copyright American Dental Association. All rights reserved.
*Code is new in 2001.

ADDENDUM B.—HOSPITAL OUTPATIENT DEPARTMENT (HOPD) PAYMENT STATUS BY HCPCS CODE AND RELATED INFORMATION—Continued

CPT/ HCPCS	HOPD Status Indicator	Description	APC	Relative Weight	Payment Rate	National Unadjusted Coinsurance	Minimum Unadjusted Coinsurance
*C4307	H	Kairos DR DC pmkr	4307				
*C4308	H	Inos2, Inos2+ DC pmkr	4308				
*C4309	H	Actros DR,D,DR-A,SLR DC pmkr	4309				
*C4310	H	Actros DR-B DC pmkr	4310				
*C4311	H	Philos DR/DR-B/SLR DC pmkr	4311				
*C4312	H	Pulsar Max II DR pmkr	4312				
*C4313	H	Marathon DR pmkr	4313				
*C4314	H	Momentum DR pmkr	4314				
*C4315	H	Selection AFm pmkr	4315				
*C4316	H	Discovery II DR	4316				
*C4317	H	Discovery II DDD	4317				
*C4600	H	Snynox,Polyrox,Elox,Retrox	4600				
*C4601	E	Aescula LV pmkr lead					
*C4602	H	Tendril SDX, 1488K pmkr lead	4602				
*C4603	H	Oscor/Flexion pmkr lead	4603				
*C4604	H	CrystallineActFix,CapsureFix	4604				
*C4605	H	CapSure Epi pmkr lead	4605				
*C4606	H	Flextend pmkr lead	4606				
*C4607	H	FinelineII/EZ, ThinlineII/EZ	4607				
*C5000	H	BX Velocity w/Hepacoat	5000				
*C5001	H	Memotherm Bil Stent, sm, med	5001				
*C5002	H	Memotherm Bil Stent, large	5002				
*C5003	H	Memotherm Bil Stent, x-large	5003				
*C5004	H	PalmazCorinthian IQ Bil Stent	5004				
*C5005	H	PalmazCorinthian IQ Trans/Bil	5005				
*C5006	H	PalmazTrans Bil Stent Sys-Med	5006				
*C5007	H	PalmazTrans XL Bil Stent--40mm	5007				
*C5008	H	PalmazTrans XL Bil Stent--50mm	5008				
*C5009	H	Stent, biliary, Biliary VistaFlex Stent	5009				
*C5010	H	Rapid Exchange Bil Stent Sys	5010				
*C5011	H	Stent, biliary, IntraStent, IntraStent LP	5011				
*C5012	H	Stent, biliary, IntraStent DoubleStrut LD	5012				
*C5013	H	IntraStent DoubleStrut, XS	5013				
*C5014	H	AVE Bridge Stent Sys-10/17/28	5014				
*C5015	H	AVE/X3 Bridge Sys, 40-100	5015				
*C5016	H	Biliary stent single use cov	5016				
*C5017	H	WallstentRP Bil--20/40/60/68mm	5017				
*C5018	H	WallstentRP Bil--80/94mm	5018				
*C5019	H	Flexima Bil Stent Sys	5019				
*C5020	H	Smart Nitinol Stent--20mm	5020				
*C5021	H	Smart Nitinol Stent--40/60mm	5021				
*C5022	H	Smart Nitinol Stent--80mm	5022				
*C5023	H	BX Velocity Stent--8/13mm	5023				
*C5024	H	BX Velocity Stent--18mm	5024				
*C5025	H	BX Velocity Stent--23mm	5025				
*C5026	H	BX Velocity Stent--28/33mm	5026				
*C5027	H	BX Velocity w/Hep--8/13mm	5027				
*C5028	H	BX Velocity w/Hep--18mm	5028				
*C5029	H	BX Velocity w/Hep--23mm	5029				
*C5030	H	Stent, coronary, S660 9/12mm	5030				
*C5031	H	Stent,coronary, S660 15/18mm	5031				
*C5032	H	Stent,coronary, S660 24/30mm	5032				
*C5033	H	Niroyal Stent Sys, 9mm	5033				
*C5034	H	Niroyal Stent Sys, 12/15mm	5034				
*C5035	H	Niroyal Stent Sys, 18mm	5035				
*C5036	H	Niroyal Stent Sys, 25mm	5036				
*C5037	H	Niroyal Stent Sys, 31mm	5037				
*C5038	H	BX Velocity Stent w/Raptor	5038				
*C5039	H	IntraCoil Periph Stent--40mm	5039				
*C5040	H	IntraCoil Periph Stent--60mm	5040				
*C5041	H	BeStent Over-the-Wire 24/30mm	5041				
*C5042	H	BeStent Over-the-Wire 18mm	5042				
*C5043	H	BeStent Over-the-Wire 15mm	5043				
*C5044	H	BeStent Over-the-Wire 9/12mm	5044				
*C5045	H	Multilink Tetra Cor Stent Sys	5045				
*C5046	H	Radius 20mm cor stent	5046				
*C5047	H	Niroyal Elite Cor Stent Sys	5047				
*C5048	H	GR II Coronary Stent	5048				
*C5130	H	Wilson-Cook Colonic Z-Stent	5130				
*C5131	H	Bard Colorectal Stent-60mm	5131				
*C5132	H	Bard Colorectal Stent-80mm	5132				
*C5133	H	Bard Colorectal Stent-100mm	5133				
*C5134	H	Enteral Wallstent--90mm	5134				
*C5279	H	Contour/Percuflex Stent	5279				

CPT codes and descriptions only are copyright American Medical Association. All Rights Reserved. Applicable FARS/DFARS Apply.
Copyright American Dental Association. All rights reserved.
*Code is new in 2001.

ADDENDUM B.—HOSPITAL OUTPATIENT DEPARTMENT (HOPD) PAYMENT STATUS BY HCPCS CODE AND RELATED INFORMATION—Continued

CPT/ HCPCS	HOPD Status Indicator	Description	APC	Relative Weight	Payment Rate	National Unadjusted Coinsurance	Minimum Unadjusted Coinsurance
*C5280	H	Inlay Dbl Ureteral Stent	5280				
*C5281	H	Wallgraft Trach Sys 70mm	5281				
*C5282	H	Wallgraft Trach Sys 20/30/50	5282				
*C5283	H	Wallstent/RP TIPS --80mm	5283				
*C5284	H	Wallstent TrachUltraFlex	5284				
*C5600	H	Closure dev, VasoSeal ES	5600				
*C5601	H	VasoSeal Model 1000	5601				
*C6001	H	Composix Mesh 8/21 in	6001				
*C6002	H	Composix Mesh 32 in	6002				
*C6003	H	Composix Mesh 48 in	6003				
*C6004	H	Composix Mesh 80 in	6004				
*C6005	H	Composix Mesh 140 in	6005				
*C6006	H	Composix Mesh 144 in	6006				
*C6012	H	Pelvicol Collagen 8/14 sq cm	6012				
*C6013	H	Pelvicol Collagen 21/24/28 sq cm	6013				
*C6014	H	Pelvicol Collagen 40sq cm	6014				
*C6015	H	Pelvicol Collagen 48 sq cm	6015				
*C6016	H	Pelvicol Collagen 96 sq cm	6016				
*C6017	H	Gore-Tex DualMesh 75/96 sq cm	6017				
*C6018	H	Gore-Tex DualMesh 150 sq cm	6018				
*C6019	H	Gore-Tex DualMesh 285 sq cm	6019				
*C6020	H	Gore-Tex DualMesh 432 sq cm	6020				
*C6021	H	Gore-Tex DualMesh 600 sq cm	6021				
*C6022	H	Gore-Tex DualMesh 884 sq cm	6022				
*C6023	H	Gore-TexPlus 1mm, 75/96sq cm	6023				
*C6024	H	Gore-TexPlus 1mm, 150sq cm	6024				
*C6025	H	Gore-TexPlus 1mm, 285sq cm	6025				
*C6026	H	Gore-TexPlus 1mm, 432sq cm	6026				
*C6027	H	Gore-TexPlus 1mm, 600sq cm	6027				
*C6028	H	Gore-TexPlus 1mm, 884 sq cm	6028				
*C6029	H	Gore-TexPlus 2mm, 150 sq cm	6029				
*C6030	H	Gore-TexPlus 2mm, 285 sq cm	6030				
*C6031	H	Gore-TexPlus 2mm, 432 sq cm	6031				
*C6032	H	Gore-TexPlus 2mm, 600 sq cm	6032				
*C6033	H	Gore-TexPlus 2mm, 884 sq cm	6033				
*C6034	H	Bard ePTFE: 15 sq cm--2mm	6034				
*C6035	H	Bard ePTFE150sqcm-1mm,75-2mm	6035				
*C6036	H	Bard ePTFE: 50/75sqcm-1,2mm	6036				
*C6037	H	Bard ePTFE: 300sq cm-1,2mm	6037				
*C6038	H	Bard ePTFE: 600sq cm-1mm	6038				
*C6039	H	Bard ePTFE: 884sq cm-1mm	6039				
*C6040	H	Bard ePTFE: 600sq cm-2mm	6040				
*C6041	H	Bard ePTFE: 884sq cm-2mm	6041				
*C6050	H	Female Sling Sys w/wo Matrl	6050				
*C6051	H	Stratasis Urethral Sling, 20/40 cm	6051				
*C6052	H	Stratasis Urethral Sling, 60 cm	6052				
*C6053	H	Surgisis Soft Graft	6053				
*C6054	H	Surgisis Enhanced Graft	6054				
*C6055	H	Surgisis Enhanced Tissue	6055				
*C6056	H	Surgisis Soft Tissue Graft	6056				
*C6057	H	Surgisis Hernia Graft	6057				
*C6058	H	SurgiPro Hernia Plug, med/lg	6058				
*C6080	H	Male Sling Sys w/wo Matrl	6080				
*C6200	H	Exxcel Sft ePTFE vas graft	6200				
*C6201	H	Impra Venaflo--10/20cm	6201				
*C6202	H	Impra Venaflo-30/40cm	6202				
*C6203	H	Impra Venaflo-50cm,vt45	6203				
*C6204	H	Impra Venaflo-stepped	6204				
*C6205	H	Impra Carboflo--10cm	6205				
*C6206	H	Impra Carboflo--20cm	6206				
*C6207	H	Impra Carboflo--30/35/40cm	6207				
*C6208	H	Impra Carboflo--40/50cm	6208				
*C6209	H	Impra Carboflo--ctrflex	6209				
*C6210	H	Exxcel ePTFE vas graft	6210				
*C6300	H	Vanguard III Endovas Graft	6300				
*C6500	H	Preface Guiding Sheath	6500				
*C6501	H	Sheath, Soft Tip Sheaths	6501				
*C6502	H	Perry Exchange Dilator	6502				
*C6525	H	Spectranetics Laser Sheath	6525				
*C6600	H	Micro Litho Flex Probes	6600				
*C6650	H	Fast-Cath Guiding Introducer	6650				
*C6651	H	Seal-AwayGuiding Introducer	6651				
*C6652	H	Bard Excalibur Introducer	6652				
*C6700	H	Focal Seal-L	6700				

CPT codes and descriptions only are copyright American Medical Association. All Rights Reserved. Applicable FARS/DFARS Apply.
Copyright American Dental Association. All rights reserved.
*Code is new in 2001.

ADDENDUM B.—HOSPITAL OUTPATIENT DEPARTMENT (HOPD) PAYMENT STATUS BY HCPCS CODE AND RELATED INFORMATION—Continued

CPT/ HCPCS	HOPD Status Indicator	Description	APC	Relative Weight	Payment Rate	National Unadjusted Coinsurance	Minimum Unadjusted Coinsurance
*C8099	H	Spectranetics Lead Lock Dev	8099				
C8100	H	Adhesion barrier, ADCON-L	8100				
*C8102	H	SurgiVision Esoph Coil	8102				
C8103D	E	Capio Capturing Dev					
*C8500	X	Atherocath-GTO	0991		$1,278.59		$255.72
*C8501	X	Pacemaker, single chamber, Vigor SSI	0992		$1,790.03		$358.01
*C8502	X	Livewire Steerable EP Cath	0988		$383.58		$76.72
*C8503	X	SyncroMed Vas Cath	0988		$383.58		$76.72
*C8504	X	VasoSeal Hemostasis Dev	0987		$127.86		$25.57
*C8505	X	SynchroMed Infusion Pump	0997		$8,182.98		$1,636.60
*C8506	X	Pmkr leads 4057M,4058M	0990		$895.01		$179.00
*C8507	X	6721L/M/S,6939 lead	0990		$895.01		$179.00
*C8508	X	Lead, defibrillator, CapSure 4965	0990		$895.01		$179.00
*C8509	X	Transvene 6933/6937 lead	0990		$895.01		$179.00
*C8510	X	Lead, defibrillator, DP-3238	0990		$895.01		$179.00
*C8511	X	Lead, defibrillator, EndoTak DSP	0996		$6,137.23		$1,227.45
*C8512	X	On-Point,Pisces-Quad lead	0990		$895.01		$179.00
*C8513	X	Pisces,Resume II lead	0990		$895.01		$179.00
*C8514	X	Dura II Penile Pros	0993		$2,557.18		$511.44
*C8515D	X	Alpha 1 narrow base prosthesis	0995		$4,602.92		$920.58
*C8516	X	Mentor Acu-Form/Mal Pros	0992		$1,790.03		$358.01
*C8517D	X	Ambicor prosthesis	0994		$3,580.05		$716.01
*C8518	X	Pacemaker, dual chamber, Vigor DDD	0994		$3,580.05		$716.01
*C8519	X	Pacemaker, dual chamber, Vista DDD	0994		$3,580.05		$716.01
*C8520	X	Pacemaker, single chamber, Legacy II S	0992		$1,790.03		$358.01
*C8521	X	Medtronic Mattrix rcvr/trmr	0997		$8,182.98		$1,636.60
*C8522	X	Palmaz Bal Stent	0990		$895.01		$179.00
*C8523	X	Wallstent Trans Bil	0991		$1,278.59		$255.72
*C8524	X	Wallstent Esop	0991		$1,278.59		$255.72
*C8525	X	Esoph stent--double	0992		$1,790.03		$358.01
*C8526	X	OptiPlast XT 5F PTA Cath	0987		$127.86		$25.57
*C8528	X	MS Classique Balloon Dilation Catheter	0987		$127.86		$25.57
*C8529	X	Crista Cath II Def 20-Pole	0990		$895.01		$179.00
*C8530	X	Gel-Filled/Smooth Mammary Pros	0989		$639.30		$127.86
*C8531	X	Wilson-Cook Esoph Z-Stent	0989		$639.30		$127.86
*C8532	X	UltraFlex Esoph	0991		$1,278.59		$255.72
*C8533	X	SynchroMed Vas Cath 8700A/V	0988		$383.58		$76.72
*C8534	X	AMS Malleable 650 Penile Prosthesis	0992		$1,790.03		$358.01
*C8535	X	Za/Spiral Z Bil Stent	0990		$895.01		$179.00
*C8536	X	Esoph Z Metal Stent	0991		$1,278.59		$255.72
*C8539	X	Quantum Dil Balloon	0987		$127.86		$25.57
*C8540	X	Flex-EZ Bal Dilator	0988		$383.58		$76.72
*C8541	X	Carson/Passprt Dil	0988		$383.58		$76.72
*C8542	X	UrethraMax Dil Cath	0987		$127.86		$25.57
*C8543	X	Amplatz Renal Dil	0987		$127.86		$25.57
*C8550	X	Livewire 5F, 7F EP Cath	0989		$639.30		$127.86
*C8551	X	Livewire 7F Duo-Decapolar	0990		$895.01		$179.00
*C8552	X	Santuro Fixed Curve Cath	0989		$639.30		$127.86
*C8597	X	Wisdom ST guidewire	0987		$127.86		$25.57
*C8598	X	SV Guidewire-5/8/14cm	0987		$127.86		$25.57
*C8599	X	Stabilizer XS guidewire	0987		$127.86		$25.57
*C8600	X	Shinobi Plus guidewire	0987		$127.86		$25.57
*C8650	X	XL Check-Flo Introducer	0987		$127.86		$25.57
*C8724	X	Octad neuro lead	0991		$1,278.59		$255.72
*C8725	X	SymMix neuro lead	0990		$895.01		$179.00
*C8748	X	Endotak SQ Patch defib lead	0990		$895.01		$179.00
*C8749	X	Endotak SQ Array defib lead	0993		$2,557.18		$511.44
*C8750	X	Unity VDDR dc pmkr	0994		$3,580.05		$716.01
*C8775	X	2188 Cor pmkr lead	0991		$1,278.59		$255.72
*C8776	X	Innomedica pmkr lead	0990		$895.01		$179.00
*C8777	X	Unipass pmkr lead	0991		$1,278.59		$255.72
*C8800	X	Lg Palmaz Bil Stent	0990		$895.01		$179.00
*C8801	X	Gianturco Bil Z Stent	0989		$639.30		$127.86
*C8802	X	Oasis Stent Intro Sys	0987		$127.86		$25.57
*C8830	X	Gianturco-Roubin Cor Snt	0991		$1,278.59		$255.72
*C8890	X	Perfluoron, per 2ml	0987		$127.86		$25.57
*C8891	X	Perfluoron, per 5/7ml	0988		$383.58		$76.72
C9000	G	Na chromate Cr51, per 0.25mCi	9000		$259.36		$34.75
C9001	J	Linezolid inj, 200mg	9001		$34.14		$4.57
C9002	J	Tenecteplase, 50mg/vial	9002		$2,612.50		$350.08
C9003	J	Palivizumab, per 50mg	9003		$664.49		$89.04
C9004	J	Gemtuzumab ozogamicin inj,5mg	9004		$1,929.69		$258.58
C9005	G	reteplase, 18.1 mg (one single-use vial)	9005		$1,306.25		$175.04
C9006	J	Tacrolimus inj, per 5mg (1 amp)	9006		$109.83		$14.72

CPT codes and descriptions only are copyright American Medical Association. All Rights Reserved. Applicable FARS/DFARS Apply.
Copyright American Dental Association. All rights reserved.
*Code is new in 2001.

ADDENDUM B.—HOSPITAL OUTPATIENT DEPARTMENT (HOPD) PAYMENT STATUS BY HCPCS CODE AND RELATED INFORMATION—Continued

CPT/ HCPCS	HOPD Status Indicator	Description	APC	Relative Weight	Payment Rate	National Unadjusted Coinsurance	Minimum Unadjusted Coinsurance
C9007	G	Baclofen Intrathecal kit-1amp	9007		$79.80		$10.69
C9008	G	Baclofen Refill Kit--500mcg	9008		$222.30		$29.79
C9009	G	Baclofen Refill Kit--2000mcg	9009		$467.40		$62.63
C9010	G	Baclofen Refill Kit--4000mcg	9010		$820.80		$109.99
C9011	G	Caffeine Citrate, inj, 1ml	9011		$12.22		$1.57
*C9100	G	Iodinated I-131 Albumin	9100		$246.05		$30.02
C9102	G	51 Na chromate, 50uCi	9102		$216.60		$26.43
C9103	G	Na Iothalamate I-125, 10uCi	9103		$12.27		$1.50
C9104	G	Anti-thymocyte globulin,25mg	9104		$251.75		$33.73
C9105	G	Hep B imm glob, per 1 ml	9105		$152.00		$20.37
C9106	J	Sirolimus 1mg/ml	9106		$6.51		$.87
*C9107	J	Tinzaparin sodium, 2ml vial	9107		$159.60		$20.50
C9108	G	Thyrotropin alfa, 1.1 mg	9108		$494.00		$70.72
C9109	G	Tirofiban hcl, 6.25 mg	9109		$199.50		$28.56
C9500	K	Platelets, irradiated, each unit	9500	1.77	$87.97		$17.59
C9501	K	Platelets, pheresis, each unit	9501	9.69	$480.75		$96.15
C9502	K	Platelets, pheresis, irradiated, each unit	9502	10.52	$521.66		$104.33
C9503	K	Fresh frzn plasma, donor retested, unit	9503	1.65	$81.83		$16.37
C9504	K	Red blood cells, deglycerolized, unit	9504	4.35	$215.83		$43.17
C9505	K	Red blood cells, irradiated, each unit	9505	2.58	$127.86		$25.57
*C9700	T	Water-induced thermotherapy	0977	23.20	$1,150.63		$230.13
*C9701	S	Stretta Procedure	0976	18.05	$895.21		$179.04
*C9702	S	Chkmate Intra Brachytx Sys	0981	46.40	$2,301.26		$460.25
D0120	E	Periodic oral evaluation					
D0140	E	Limit oral eval problm focus					
D0150	S	Comprehensve oral evaluation	0330	1.51	$74.89	$14.98	$14.98
D0160	E	Extensv oral eval prob focus					
D0170	E	Re-eval,est pt,problem focus					
D0210	E	Intraor complete film series					
D0220	E	Intraoral periapical first f					
D0230	E	Intraoral periapical ea add					
D0240	S	Intraoral occlusal film	0330	1.51	$74.89	$14.98	$14.98
D0250	S	Extraoral first film	0330	1.51	$74.89	$14.98	$14.98
D0260	S	Extraoral ea additional film	0330	1.51	$74.89	$14.98	$14.98
D0270	S	Dental bitewing single film	0330	1.51	$74.89	$14.98	$14.98
D0272	S	Dental bitewings two films	0330	1.51	$74.89	$14.98	$14.98
D0274	S	Dental bitewings four films	0330	1.51	$74.89	$14.98	$14.98
D0277	S	Vert bitewings-sev to eight	0330	1.51	$74.89	$14.98	$14.98
D0290	E	Dental film skull/facial bon					
D0310	E	Dental saliography					
D0320	E	Dental tmj arthrogram incl i					
D0321	E	Dental other tmj films					
D0322	E	Dental tomographic survey					
D0330	E	Dental panoramic film					
D0340	E	Dental cephalometric film					
D0350	E	Oral/facial images					
D0415	E	Bacteriologic study					
D0425	E	Caries susceptibility test					
D0460	S	Pulp vitality test	0330	1.51	$74.89	$14.98	$14.98
D0470	E	Diagnostic casts					
D0472	S	Gross exam, prep & report	0330	1.51	$74.89	$14.98	$14.98
D0473	S	Micro exam, prep & report	0330	1.51	$74.89	$14.98	$14.98
D0474	S	Micro w exam of surg margins	0330	1.51	$74.89	$14.98	$14.98
D0480	S	Cytopath smear prep & report	0330	1.51	$74.89	$14.98	$14.98
D0501	S	Histopathologic examinations	0330	1.51	$74.89	$14.98	$14.98
D0502	S	Other oral pathology procedu	0330	1.51	$74.89	$14.98	$14.98
D0999	S	Unspecified diagnostic proce	0330	1.51	$74.89	$14.98	$14.98
D1110	E	Dental prophylaxis adult					
D1120	E	Dental prophylaxis child					
D1201	E	Topical fluor w prophy child					
D1203	E	Topical fluor w/o prophy chi					
D1204	E	Topical fluor w/o prophy adu					
D1205	E	Topical fluoride w/ prophy a					
D1310	E	Nutri counsel-control caries					
D1320	E	Tobacco counseling					
D1330	E	Oral hygiene instruction					
D1351	E	Dental sealant per tooth					
D1510	S	Space maintainer fxd unilat	0330	1.51	$74.89	$14.98	$14.98
D1515	S	Fixed bilat space maintainer	0330	1.51	$74.89	$14.98	$14.98
D1520	S	Remove unilat space maintain	0330	1.51	$74.89	$14.98	$14.98
D1525	S	Remove bilat space maintain	0330	1.51	$74.89	$14.98	$14.98
D1550	S	Recement space maintainer	0330	1.51	$74.89	$14.98	$14.98
D2110	E	Amalgam one surface primary					
D2120	E	Amalgam two surfaces primary					

CPT codes and descriptions only are copyright American Medical Association. All Rights Reserved. Applicable FARS/DFARS Apply.
Copyright American Dental Association. All rights reserved.
*Code is new in 2001.

ADDENDUM B.—HOSPITAL OUTPATIENT DEPARTMENT (HOPD) PAYMENT STATUS BY HCPCS CODE AND RELATED INFORMATION—Continued

CPT/ HCPCS	HOPD Status Indicator	Description	APC	Relative Weight	Payment Rate	National Unadjusted Coinsurance	Minimum Unadjusted Coinsurance
D2130	E	Amalgam three surfaces prima					
D2131	E	Amalgam four/more surf prima					
D2140	E	Amalgam one surface permanen					
D2150	E	Amalgam two surfaces permane					
D2160	E	Amalgam three surfaces perma					
D2161	E	Amalgam 4 or > surfaces perm					
D2330	E	Resin one surface-anterior					
D2331	E	Resin two surfaces-anterior					
D2332	E	Resin three surfaces-anterio					
D2335	E	Resin 4/> surf or w incis an					
D2336	E	Composite resin crown					
D2337	E	Compo resin crown ant-perm					
D2380	E	Resin one surf poster primar					
D2381	E	Resin two surf poster primar					
D2382	E	Resin three/more surf post p					
D2385	E	Resin one surf poster perman					
D2386	E	Resin two surf poster perman					
D2387	E	Resin three/more surf post p					
D2388	E	Resin four/more, post perm					
D2410	E	Dental gold foil one surface					
D2420	E	Dental gold foil two surface					
D2430	E	Dental gold foil three surfa					
D2510	E	Dental inlay metalic 1 surf					
D2520	E	Dental inlay metallic 2 surf					
D2530	E	Dental inlay metl 3/more sur					
D2542	E	Dental onlay metallic 2 surf					
D2543	E	Dental onlay metallic 3 surf					
D2544	E	Dental onlay metl 4/more sur					
D2610	E	Inlay porcelain/ceramic 1 su					
D2620	E	Inlay porcelain/ceramic 2 su					
D2630	E	Dental onlay porc 3/more sur					
D2642	E	Dental onlay porcelin 2 surf					
D2643	E	Dental onlay porcelin 3 surf					
D2644	E	Dental onlay porc 4/more sur					
D2650	E	Inlay composite/resin one su					
D2651	E	Inlay composite/resin two su					
D2652	E	Dental inlay resin 3/mre sur					
D2662	E	Dental onlay resin 2 surface					
D2663	E	Dental onlay resin 3 surface					
D2664	E	Dental onlay resin 4/mre sur					
D2710	E	Crown resin laboratory					
D2720	E	Crown resin w/ high noble me					
D2721	E	Crown resin w/ base metal					
D2722	E	Crown resin w/ noble metal					
D2740	E	Crown porcelain/ceramic subs					
D2750	E	Crown porcelain w/ h noble m					
D2751	E	Crown porcelain fused base m					
D2752	E	Crown porcelain w/ noble met					
D2780	E	Crown 3/4 cast hi noble met					
D2781	E	Crown 3/4 cast base metal					
D2782	E	Crown 3/4 cast noble metal					
D2783	E	Crown 3/4 porcelain/ceramic					
D2790	E	Crown full cast high noble m					
D2791	E	Crown full cast base metal					
D2792	E	Crown full cast noble metal					
D2799	E	Provisional crown					
D2910	E	Dental recement inlay					
D2920	E	Dental recement crown					
D2930	E	Prefab stnlss steel crwn pri					
D2931	E	Prefab stnlss steel crown pe					
D2932	E	Prefabricated resin crown					
D2933	E	Prefab stainless steel crown					
D2940	E	Dental sedative filling					
D2950	E	Core build-up incl any pins					
D2951	E	Tooth pin retention					
D2952	E	Post and core cast + crown					
D2953	E	Each addtnl cast post					
D2954	E	Prefab post/core + crown					
D2955	E	Post removal					
D2957	E	Each addtnl prefab post					
D2960	E	Laminate labial veneer					
D2961	E	Lab labial veneer resin					
D2962	E	Lab labial veneer porcelain					
D2970	S	Temporary- fractured tooth	0330	1.51	$74.89	$14.98	$14.98

CPT codes and descriptions only are copyright American Medical Association. All Rights Reserved. Applicable FARS/DFARS Apply.
Copyright American Dental Association. All rights reserved.
*Code is new in 2001.

ADDENDUM B.—HOSPITAL OUTPATIENT DEPARTMENT (HOPD) PAYMENT STATUS BY HCPCS CODE AND RELATED INFORMATION—Continued

CPT/ HCPCS	HOPD Status Indicator	Description	APC	Relative Weight	Payment Rate	National Unadjusted Coinsurance	Minimum Unadjusted Coinsurance
D2980	E	Crown repair					
D2999	S	Dental unspec restorative pr	0330	1.51	$74.89	$14.98	$14.98
D3110	E	Pulp cap direct					
D3120	E	Pulp cap indirect					
D3220	E	Therapeutic pulpotomy					
D3221	E	Gross pulpal debridement					
D3230	E	Pulpal therapy anterior prim					
D3240	E	Pulpal therapy posterior pri					
D3310	E	Anterior					
D3320	E	Root canal therapy 2 canals					
D3330	E	Root canal therapy 3 canals					
D3331	E	Non-surg tx root canal obs					
D3332	E	Incomplete endodontic tx					
D3333	E	Internal root repair					
D3346	E	Retreat root canal anterior					
D3347	E	Retreat root canal bicuspid					
D3348	E	Retreat root canal molar					
D3351	E	Apexification/recalc initial					
D3352	E	Apexification/recalc interim					
D3353	E	Apexification/recalc final					
D3410	E	Apicoect/perirad surg anter					
D3421	E	Root surgery bicuspid					
D3425	E	Root surgery molar					
D3426	E	Root surgery ea add root					
D3430	E	Retrograde filling					
D3450	E	Root amputation					
D3460	S	Endodontic endosseous implan	0330	1.51	$74.89	$14.98	$14.98
D3470	E	Intentional replantation					
D3910	E	Isolation- tooth w rubb dam					
D3920	E	Tooth splitting					
D3950	E	Canal prep/fitting of dowel					
D3999	S	Endodontic procedure	0330	1.51	$74.89	$14.98	$14.98
D4210	E	Gingivectomy/plasty per quad					
D4211	E	Gingivectomy/plasty per toot					
D4220	E	Gingival curettage per quadr					
D4240	E	Gingival flap proc w/ planin					
D4245	E	Apically positioned flap					
D4249	E	Crown lengthen hard tissue					
D4260	S	Osseous surgery per quadrant	0330	1.51	$74.89	$14.98	$14.98
D4263	S	Bone replce graft first site	0330	1.51	$74.89	$14.98	$14.98
D4264	S	Bone replce graft each add	0330	1.51	$74.89	$14.98	$14.98
D4266	E	Guided tiss regen resorble					
D4267	E	Guided tiss regen nonresorb					
D4268	S	Surgical revision procedure	0330	1.51	$74.89	$14.98	$14.98
D4270	S	Pedicle soft tissue graft pr	0330	1.51	$74.89	$14.98	$14.98
D4271	S	Free soft tissue graft proc	0330	1.51	$74.89	$14.98	$14.98
D4273	S	Subepithelial tissue graft	0330	1.51	$74.89	$14.98	$14.98
D4274	E	Distal/proximal wedge proc					
D4320	E	Provision splnt intracoronal					
D4321	E	Provisional splint extracoro					
D4341	E	Periodontal scaling & root					
D4355	S	Full mouth debridement	0330	1.51	$74.89	$14.98	$14.98
D4381	S	Localized chemo delivery	0330	1.51	$74.89	$14.98	$14.98
D4910	E	Periodontal maint procedures					
D4920	E	Unscheduled dressing change					
D4999	E	Unspecified periodontal proc					
D5110	E	Dentures complete maxillary					
D5120	E	Dentures complete mandible					
D5130	E	Dentures immediat maxillary					
D5140	E	Dentures immediat mandible					
D5211	E	Dentures maxill part resin					
D5212	E	Dentures mand part resin					
D5213	E	Dentures maxill part metal					
D5214	E	Dentures mandibl part metal					
D5281	E	Removable partial denture					
D5410	E	Dentures adjust cmplt maxil					
D5411	E	Dentures adjust cmplt mand					
D5421	E	Dentures adjust part maxill					
D5422	E	Dentures adjust part mandbl					
D5510	E	Dentur repr broken compl bas					
D5520	E	Replace denture teeth complt					
D5610	E	Dentures repair resin base					
D5620	E	Rep part denture cast frame					
D5630	E	Rep partial denture clasp					

CPT codes and descriptions only are copyright American Medical Association. All Rights Reserved. Applicable FARS/DFARS Apply.
Copyright American Dental Association. All rights reserved.
*Code is new in 2001.

ADDENDUM B.—HOSPITAL OUTPATIENT DEPARTMENT (HOPD) PAYMENT STATUS BY HCPCS CODE AND RELATED INFORMATION—Continued

CPT/ HCPCS	HOPD Status Indicator	Description	APC	Relative Weight	Payment Rate	National Unadjusted Coinsurance	Minimum Unadjusted Coinsurance
D5640	E	Replace part denture teeth					
D5650	E	Add tooth to partial denture					
D5660	E	Add clasp to partial denture					
D5710	E	Dentures rebase cmplt maxil					
D5711	E	Dentures rebase cmplt mand					
D5720	E	Dentures rebase part maxill					
D5721	E	Dentures rebase part mandbl					
D5730	E	Denture reln cmplt maxil ch					
D5731	E	Denture reln cmplt mand chr					
D5740	E	Denture reln part maxil chr					
D5741	E	Denture reln part mand chr					
D5750	E	Denture reln cmplt max lab					
D5751	E	Denture reln cmplt mand lab					
D5760	E	Denture reln part maxil lab					
D5761	E	Denture reln part mand lab					
D5810	E	Denture interm cmplt maxill					
D5811	E	Denture interm cmplt mandbl					
D5820	E	Denture interm part maxill					
D5821	E	Denture interm part mandbl					
D5850	E	Denture tiss conditn maxill					
D5851	E	Denture tiss condtin mandbl					
D5860	E	Overdenture complete					
D5861	E	Overdenture partial					
D5862	E	Precision attachment					
D5867	E	Replacement of precision att					
D5875	E	Prosthesis modification					
D5899	E	Removable prosthodontic proc					
D5911	S	Facial moulage sectional	0330	1.51	$74.89	$14.98	$14.98
D5912	S	Facial moulage complete	0330	1.51	$74.89	$14.98	$14.98
D5913	E	Nasal prosthesis					
D5914	E	Auricular prosthesis					
D5915	E	Orbital prosthesis					
D5916	E	Ocular prosthesis					
D5919	E	Facial prosthesis					
D5922	E	Nasal septal prosthesis					
D5923	E	Ocular prosthesis interim					
D5924	E	Cranial prosthesis					
D5925	E	Facial augmentation implant					
D5926	E	Replacement nasal prosthesis					
D5927	E	Auricular replacement					
D5928	E	Orbital replacement					
D5929	E	Facial replacement					
D5931	E	Surgical obturator					
D5932	E	Postsurgical obturator					
D5933	E	Refitting of obturator					
D5934	E	Mandibular flange prosthesis					
D5935	E	Mandibular denture prosth					
D5936	E	Temp obturator prosthesis					
D5937	E	Trismus appliance					
D5951	E	Feeding aid					
D5952	E	Pediatric speech aid					
D5953	E	Adult speech aid					
D5954	E	Superimposed prosthesis					
D5955	E	Palatal lift prosthesis					
D5958	E	Intraoral con def inter plt					
D5959	E	Intraoral con def mod palat					
D5960	E	Modify speech aid prosthesis					
D5982	E	Surgical stent					
D5983	S	Radiation applicator	0330	1.51	$74.89	$14.98	$14.98
D5984	S	Radiation shield	0330	1.51	$74.89	$14.98	$14.98
D5985	S	Radiation cone locator	0330	1.51	$74.89	$14.98	$14.98
D5986	E	Fluoride applicator					
D5987	S	Commissure splint	0330	1.51	$74.89	$14.98	$14.98
D5988	E	Surgical splint					
D5999	E	Maxillofacial prosthesis					
D6010	E	Odontics endosteal implant					
D6020	E	Odontics abutment placement					
D6040	E	Odontics eposteal implant					
D6050	E	Odontics transosteal implnt					
D6055	E	Implant connecting bar					
D6056	E	Prefabricated abutment					
D6057	E	Custom abutment					
D6058	E	Abutment supported crown					
D6059	E	Abutment supported mtl crown					

CPT codes and descriptions only are copyright American Medical Association. All Rights Reserved. Applicable FARS/DFARS Apply.
Copyright American Dental Association. All rights reserved.
*Code is new in 2001.

ADDENDUM B.—HOSPITAL OUTPATIENT DEPARTMENT (HOPD) PAYMENT STATUS BY HCPCS CODE AND RELATED INFORMATION—Continued

CPT/ HCPCS	HOPD Status Indicator	Description	APC	Relative Weight	Payment Rate	National Unadjusted Coinsurance	Minimum Unadjusted Coinsurance
D6060	E	Abutment supported mtl crown					
D6061	E	Abutment supported mtl crown					
D6062	E	Abutment supported mtl crown					
D6063	E	Abutment supported mtl crown					
D6064	E	Abutment supported mtl crown					
D6065	E	Implant supported crown					
D6066	E	Implant supported mtl crown					
D6067	E	Implant supported mtl crown					
D6068	E	Abutment supported retainer					
D6069	E	Abutment supported retainer					
D6070	E	Abutment supported retainer					
D6071	E	Abutment supported retainer					
D6072	E	Abutment supported retainer					
D6073	E	Abutment supported retainer					
D6074	E	Abutment supported retainer					
D6075	E	Implant supported retainer					
D6076	E	Implant supported retainer					
D6077	E	Implant supported retainer					
D6078	E	Implnt/abut suprtd fixd dent					
D6079	E	Implnt/abut suprtd fixd dent					
D6080	E	Implant maintenance					
D6090	E	Repair implant					
D6095	E	Odontics repr abutment					
D6100	E	Removal of implant					
D6199	E	Implant procedure					
D6210	E	Prosthodont high noble metal					
D6211	E	Bridge base metal cast					
D6212	E	Bridge noble metal cast					
D6240	E	Bridge porcelain high noble					
D6241	E	Bridge porcelain base metal					
D6242	E	Bridge porcelain nobel metal					
D6245	E	Bridge porcelain/ceramic					
D6250	E	Bridge resin w/high noble					
D6251	E	Bridge resin base metal					
D6252	E	Bridge resin w/noble metal					
D6519	E	Inlay/onlay porce/ceramic					
D6520	E	Dental retainer two surfaces					
D6530	E	Retainer metallic 3+ surface					
D6543	E	Dental retainr onlay 3 surf					
D6544	E	Dental retainr onlay 4/more					
D6545	E	Dental retainr cast metl					
D6548	E	Porcelain/ceramic retainer					
D6720	E	Retain crown resin w hi nble					
D6721	E	Crown resin w/base metal					
D6722	E	Crown resin w/noble metal					
D6740	E	Crown porcelain/ceramic					
D6750	E	Crown porcelain high noble					
D6751	E	Crown porcelain base metal					
D6752	E	Crown porcelain noble metal					
D6780	E	Crown 3/4 high noble metal					
D6781	E	Crown 3/4 cast based metal					
D6782	E	Crown 3/4 cast noble metal					
D6783	E	Crown 3/4 porcelain/ceramic					
D6790	E	Crown full high noble metal					
D6791	E	Crown full base metal cast					
D6792	E	Crown full noble metal cast					
D6920	S	Dental connector bar	0330	1.51	$74.89	$14.98	$14.98
D6930	E	Dental recement bridge					
D6940	E	Stress breaker					
D6950	E	Precision attachment					
D6970	E	Post & core plus retainer					
D6971	E	Cast post bridge retainer					
D6972	E	Prefab post & core plus reta					
D6973	E	Core build up for retainer					
D6975	E	Coping metal					
D6976	E	Each addtnl cast post					
D6977	E	Each addtl prefab post					
D6980	E	Bridge repair					
D6999	E	Fixed prosthodontic proc					
D7110	S	Oral surgery single tooth	0330	1.51	$74.89	$14.98	$14.98
D7120	S	Each add tooth extraction	0330	1.51	$74.89	$14.98	$14.98
D7130	S	Tooth root removal	0330	1.51	$74.89	$14.98	$14.98
D7210	S	Rem imp tooth w mucoper flp	0330	1.51	$74.89	$14.98	$14.98
D7220	S	Impact tooth remov soft tiss	0330	1.51	$74.89	$14.98	$14.98

CPT codes and descriptions only are copyright American Medical Association. All Rights Reserved. Applicable FARS/DFARS Apply.
Copyright American Dental Association. All rights reserved.
*Code is new in 2001.

ADDENDUM B.—HOSPITAL OUTPATIENT DEPARTMENT (HOPD) PAYMENT STATUS BY HCPCS CODE AND RELATED INFORMATION—Continued

CPT/ HCPCS	HOPD Status Indicator	Description	APC	Relative Weight	Payment Rate	National Unadjusted Coinsurance	Minimum Unadjusted Coinsurance
D7230	S	Impact tooth remov part bony	0330	1.51	$74.89	$14.98	$14.98
D7240	S	Impact tooth remov comp bony	0330	1.51	$74.89	$14.98	$14.98
D7241	S	Impact tooth rem bony w/comp	0330	1.51	$74.89	$14.98	$14.98
D7250	S	Tooth root removal	0330	1.51	$74.89	$14.98	$14.98
D7260	S	Oral antral fistula closure	0330	1.51	$74.89	$14.98	$14.98
D7270	E	Tooth reimplantation					
D7272	E	Tooth transplantation					
D7280	E	Exposure impact tooth orthod					
D7281	E	Exposure tooth aid eruption					
D7285	E	Biopsy of oral tissue hard					
D7286	E	Biopsy of oral tissue soft					
D7290	E	Repositioning of teeth					
D7291	S	Transseptal fiberotomy	0330	1.51	$74.89	$14.98	$14.98
D7310	E	Alveoplasty w/ extraction					
D7320	E	Alveoplasty w/o extraction					
D7340	E	Vestibuloplasty ridge extens					
D7350	E	Vestibuloplasty exten graft					
D7410	E	Rad exc lesion up to 1.25 cm					
D7420	E	Lesion > 1.25 cm					
D7430	E	Exc benign tumor to 1.25 cm					
D7431	E	Benign tumor exc > 1.25 cm					
D7440	E	Malig tumor exc to 1.25 cm					
D7441	E	Malig tumor > 1.25 cm					
D7450	E	Rem odontogen cyst to 1.25cm					
D7451	E	Rem odontogen cyst > 1.25 cm					
D7460	E	Rem nonodonto cyst to 1.25cm					
D7461	E	Rem nonodonto cyst > 1.25 cm					
D7465	E	Lesion destruction					
D7471	E	Rem exostosis any site					
D7480	E	Partial ostectomy					
D7490	E	Mandible resection					
D7510	E	I&d absc intraoral soft tiss					
D7520	E	I&d abscess extraoral					
D7530	E	Removal fb skin/areolar tiss					
D7540	E	Removal of fb reaction					
D7550	E	Removal of sloughed off bone					
D7560	E	Maxillary sinusotomy					
D7610	E	Maxilla open reduct simple					
D7620	E	Clsd reduct simpl maxilla fx					
D7630	E	Open red simpl mandible fx					
D7640	E	Clsd red simpl mandible fx					
D7650	E	Open red simp malar/zygom fx					
D7660	E	Clsd red simp malar/zygom fx					
D7670	E	Closd rductn splint alveolus					
D7680	E	Reduct simple facial bone fx					
D7710	E	Maxilla open reduct compound					
D7720	E	Clsd reduct compd maxilla fx					
D7730	E	Open reduct compd mandble fx					
D7740	E	Clsd reduct compd mandble fx					
D7750	E	Open red comp malar/zygma fx					
D7760	E	Clsd red comp malar/zygma fx					
D7770	E	Open reduc compd alveolus fx					
D7780	E	Reduct compnd facial bone fx					
D7810	E	Tmj open reduct-dislocation					
D7820	E	Closed tmp manipulation					
D7830	E	Tmj manipulation under anest					
D7840	E	Removal of tmj condyle					
D7850	E	Tmj meniscectomy					
D7852	E	Tmj repair of joint disc					
D7854	E	Tmj excisn of joint membrane					
D7856	E	Tmj cutting of a muscle					
D7858	E	Tmj reconstruction					
D7860	E	Tmj cutting into joint					
D7865	E	Tmj reshaping components					
D7870	E	Tmj aspiration joint fluid					
D7871	E	Lysis + lavage w catheters					
D7872	E	Tmj diagnostic arthroscopy					
D7873	E	Tmj arthroscopy lysis adhesn					
D7874	E	Tmj arthroscopy disc reposit					
D7875	E	Tmj arthroscopy synovectomy					
D7876	E	Tmj arthroscopy discectomy					
D7877	E	Tmj arthroscopy debridement					
D7880	E	Occlusal orthotic appliance					
D7899	E	Tmj unspecified therapy					

CPT codes and descriptions only are copyright American Medical Association. All Rights Reserved. Applicable FARS/DFARS Apply.
Copyright American Dental Association. All rights reserved.
*Code is new in 2001.

ADDENDUM B.—HOSPITAL OUTPATIENT DEPARTMENT (HOPD) PAYMENT STATUS BY HCPCS CODE AND RELATED INFORMATION—Continued

CPT/ HCPCS	HOPD Status Indicator	Description	APC	Relative Weight	Payment Rate	National Unadjusted Coinsurance	Minimum Unadjusted Coinsurance
D7910	E	Dent sutur recent wnd to 5cm					
D7911	E	Dental suture wound to 5 cm					
D7912	E	Suture complicate wnd > 5 cm					
D7920	E	Dental skin graft					
D7940	S	Reshaping bone orthognathic	0330	1.51	$74.89	$14.98	$14.98
D7941	E	Bone cutting ramus closed					
D7943	E	Cutting ramus open w/graft					
D7944	E	Bone cutting segmented					
D7945	E	Bone cutting body mandible					
D7946	E	Reconstruction maxilla total					
D7947	E	Reconstruct maxilla segment					
D7948	E	Reconstruct midface no graft					
D7949	E	Reconstruct midface w/graft					
D7950	E	Mandible graft					
D7955	E	Repair maxillofacial defects					
D7960	E	Frenulectomy/frenulotomy					
D7970	E	Excision hyperplastic tissue					
D7971	E	Excision pericoronal gingiva					
D7980	E	Sialolithotomy					
D7981	E	Excision of salivary gland					
D7982	E	Sialodochoplasty					
D7983	E	Closure of salivary fistula					
D7990	E	Emergency tracheotomy					
D7991	E	Dental coronoidectomy					
D7995	E	Synthetic graft facial bones					
D7996	E	Implant mandible for augment					
D7997	E	Appliance removal					
D7999	E	Oral surgery procedure					
D8010	E	Limited dental tx primary					
D8020	E	Limited dental tx transition					
D8030	E	Limited dental tx adolescent					
D8040	E	Limited dental tx adult					
D8050	E	Intercep dental tx primary					
D8060	E	Intercep dental tx transitn					
D8070	E	Compre dental tx transition					
D8080	E	Compre dental tx adolescent					
D8090	E	Compre dental tx adult					
D8210	E	Orthodontic rem appliance tx					
D8220	E	Fixed appliance therapy habt					
D8660	E	Preorthodontic tx visit					
D8670	E	Periodic orthodontc tx visit					
D8680	E	Orthodontic retention					
D8690	E	Orthodontic treatment					
D8691	E	Repair ortho appliance					
D8692	E	Replacement retainer					
D8999	E	Orthodontic procedure					
D9110	N	Tx dental pain minor proc					
D9210	E	Dent anesthesia w/o surgery					
D9211	E	Regional block anesthesia					
D9212	E	Trigeminal block anesthesia					
D9215	E	Local anesthesia					
D9220	E	General anesthesia					
D9221	E	General anesthesia ea ad 15m					
D9230	N	Analgesia					
D9241	E	Intravenous sedation					
D9242	E	IV sedation ea ad 30 m					
D9248	N	Sedation (non-iv)					
D9310	E	Dental consultation					
D9410	E	Dental house call					
D9420	E	Hospital call					
D9430	E	Office visit during hours					
D9440	E	Office visit after hours					
D9610	E	Dent therapeutic drug inject					
D9630	S	Other drugs/medicaments	0330	1.51	$74.89	$14.98	$14.98
D9910	E	Dent appl desensitizing med					
D9911	E	Appl desensitizing resin					
D9920	E	Behavior management					
D9930	S	Treatment of complications	0330	1.51	$74.89	$14.98	$14.98
D9940	S	Dental occlusal guard	0330	1.51	$74.89	$14.98	$14.98
D9941	E	Fabrication athletic guard					
D9950	S	Occlusion analysis	0330	1.51	$74.89	$14.98	$14.98
D9951	S	Limited occlusal adjustment	0330	1.51	$74.89	$14.98	$14.98
D9952	S	Complete occlusal adjustment	0330	1.51	$74.89	$14.98	$14.98
D9970	E	Enamel microabrasion					

CPT codes and descriptions only are copyright American Medical Association. All Rights Reserved. Applicable FARS/DFARS Apply.
Copyright American Dental Association. All rights reserved.
*Code is new in 2001.

ADDENDUM B.—HOSPITAL OUTPATIENT DEPARTMENT (HOPD) PAYMENT STATUS BY HCPCS CODE AND RELATED INFORMATION—Continued

CPT/ HCPCS	HOPD Status Indicator	Description	APC	Relative Weight	Payment Rate	National Unadjusted Coinsurance	Minimum Unadjusted Coinsurance
D9971	E	Odontoplasty 1-2 teeth					
D9972	E	Extrnl bleaching per arch					
D9973	E	Extrnl bleaching per tooth					
D9974	E	Intrnl bleaching per tooth					
D9999	E	Adjunctive procedure					
E0100	A	Cane adjust/fixed with tip					
E0105	A	Cane adjust/fixed quad/3 pro					
E0110	A	Crutch forearm pair					
E0111	A	Crutch forearm each					
E0112	A	Crutch underarm pair wood					
E0113	A	Crutch underarm each wood					
E0114	A	Crutch underarm pair no wood					
E0116	A	Crutch underarm each no wood					
E0130	A	Walker rigid adjust/fixed ht					
E0135	A	Walker folding adjust/fixed					
E0141	A	Rigid walker wheeled wo seat					
E0142	A	Walker rigid wheeled with se					
E0143	A	Walker folding wheeled w/o s					
E0144	A	Enclosed walker w rear seat					
E0145	A	Walker whled seat/crutch att					
E0146	A	Folding walker wheels w seat					
E0147	A	Walker variable wheel resist					
E0148	A	Heavyduty walker no wheels					
E0149	A	Heavy duty wheeled walker					
E0153	A	Forearm crutch platform atta					
E0154	A	Walker platform attachment					
E0155	A	Walker wheel attachment,pair					
E0156	A	Walker seat attachment					
E0157	A	Walker crutch attachment					
E0158	A	Walker leg extenders set of4					
E0159	A	Brake for wheeled walker					
E0160	A	Sitz type bath or equipment					
E0161	A	Sitz bath/equipment w/faucet					
E0162	A	Sitz bath chair					
E0163	A	Commode chair stationry fxd					
E0164	A	Commode chair mobile fixed a					
E0165	A	Commode chair stationry det					
E0166	A	Commode chair mobile detach					
E0167	A	Commode chair pail or pan					
E0168	A	Heavyduty/wide commode chair					
E0175	A	Commode chair foot rest					
E0176	A	Air pressre pad/cushion nonp					
E0177	A	Water press pad/cushion nonp					
E0178	A	Gel pressre pad/cushion nonp					
E0179	A	Dry pressre pad/cushion nonp					
E0180	A	Press pad alternating w pump					
E0181	A	Press pad alternating w/ pum					
E0182	A	Pressure pad alternating pum					
E0184	A	Dry pressure mattress					
E0185	A	Gel pressure mattress pad					
E0186	A	Air pressure mattress					
E0187	A	Water pressure mattress					
E0188	E	Synthetic sheepskin pad					
E0189	E	Lambswool sheepskin pad					
E0191	A	Protector heel or elbow					
E0192	A	Pad wheelchr low press/posit					
E0193	A	Powered air flotation bed					
E0194	A	Air fluidized bed					
E0196	A	Gel pressure mattress					
E0197	A	Air pressure pad for mattres					
E0198	A	Water pressure pad for mattr					
E0199	A	Dry pressure pad for mattres					
E0200	A	Heat lamp without stand					
E0202	A	Phototherapy light w/ photom					
E0205	A	Heat lamp with stand					
E0210	A	Electric heat pad standard					
E0215	A	Electric heat pad moist					
E0217	A	Water circ heat pad w pump					
E0218	E	Water circ cold pad w pump					
E0220	A	Hot water bottle					
E0225	A	Hydrocollator unit					
E0230	A	Ice cap or collar					
E0235	A	Paraffin bath unit portable					
E0236	A	Pump for water circulating p					

CPT codes and descriptions only are copyright American Medical Association. All Rights Reserved. Applicable FARS/DFARS Apply.
Copyright American Dental Association. All rights reserved.
*Code is new in 2001.

ADDENDUM B.—HOSPITAL OUTPATIENT DEPARTMENT (HOPD) PAYMENT STATUS BY HCPCS CODE AND RELATED INFORMATION—Continued

CPT/ HCPCS	HOPD Status Indicator	Description	APC	Relative Weight	Payment Rate	National Unadjusted Coinsurance	Minimum Unadjusted Coinsurance
E0238	A	Heat pad non-electric moist					
E0239	A	Hydrocollator unit portable					
E0241	E	Bath tub wall rail					
E0242	E	Bath tub rail floor					
E0243	E	Toilet rail					
E0244	E	Toilet seat raised					
E0245	E	Tub stool or bench					
E0246	E	Transfer tub rail attachment					
E0249	A	Pad water circulating heat u					
E0250	A	Hosp bed fixed ht w/ mattres					
E0251	A	Hosp bed fixd ht w/o mattres					
E0255	A	Hospital bed var ht w/ mattr					
E0256	A	Hospital bed var ht w/o matt					
E0260	A	Hosp bed semi-electr w/ matt					
E0261	A	Hosp bed semi-electr w/o mat					
E0265	A	Hosp bed total electr w/ mat					
E0266	A	Hosp bed total elec w/o matt					
E0270	E	Hospital bed institutional t					
E0271	A	Mattress innerspring					
E0272	A	Mattress foam rubber					
E0273	E	Bed board					
E0274	E	Over-bed table					
E0275	A	Bed pan standard					
E0276	A	Bed pan fracture					
E0277	A	Powered pres-redu air mattrs					
E0280	A	Bed cradle					
E0290	A	Hosp bed fx ht w/o rails w/m					
E0291	A	Hosp bed fx ht w/o rail w/o					
E0292	A	Hosp bed var ht w/o rail w/o					
E0293	A	Hosp bed var ht w/o rail w/					
E0294	A	Hosp bed semi-elect w/ mattr					
E0295	A	Hosp bed semi-elect w/o matt					
E0296	A	Hosp bed total elect w/ matt					
E0297	A	Hosp bed total elect w/o mat					
E0298	A	Heavyduty/xtra wide hosp bed					
E0305	A	Rails bed side half length					
E0310	A	Rails bed side full length					
E0315	E	Bed accessory brd/tbl/supprt					
E0325	A	Urinal male jug-type					
E0326	A	Urinal female jug-type					
E0350	E	Control unit bowel system					
E0352	E	Disposable pack w/bowel syst					
E0370	E	Air elevator for heel					
E0371	A	Nonpower mattress overlay					
E0372	A	Powered air mattress overlay					
E0373	A	Nonpowered pressure mattress					
E0424	A	Stationary compressed gas O2					
E0425	E	Gas system stationary compre					
E0430	E	Oxygen system gas portable					
E0431	A	Portable gaseous O2					
E0434	A	Portable liquid O2					
E0435	E	Oxygen system liquid portabl					
E0439	A	Stationary liquid O2					
E0440	E	Oxygen system liquid station					
E0441	A	Oxygen contents gas per/unit					
E0442	A	Oxygen contents liq per/unit					
E0443	A	Port O2 contents gas/unit					
E0444	A	Port O2 contents liq/unit					
E0450	A	Volume vent stationary/porta					
E0455	A	Oxygen tent excl croup/ped t					
E0457	A	Chest shell					
E0459	A	Chest wrap					
E0460	A	Neg press vent portabl/statn					
E0462	A	Rocking bed w/ or w/o side r					
E0480	A	Percussor elect/pneum home m					
E0500	A	Ippb all types					
E0550	A	Humidif extens supple w ippb					
E0555	A	Humidifier for use w/ regula					
E0560	A	Humidifier supplemental w/ i					
E0565	A	Compressor air power source					
E0570	A	Nebulizer with compression					
E0571	A	Aerosol compressor for svneb					
E0572	A	Aerosol compressor adjust pr					
E0574	A	Ultrasonic generator w svneb					

CPT codes and descriptions only are copyright American Medical Association. All Rights Reserved. Applicable FARS/DFARS Apply.
Copyright American Dental Association. All rights reserved.
*Code is new in 2001.

ADDENDUM B.—HOSPITAL OUTPATIENT DEPARTMENT (HOPD) PAYMENT STATUS BY HCPCS CODE AND RELATED INFORMATION—Continued

CPT/ HCPCS	HOPD Status Indicator	Description	APC	Relative Weight	Payment Rate	National Unadjusted Coinsurance	Minimum Unadjusted Coinsurance
E0575	A	Nebulizer ultrasonic					
E0580	A	Nebulizer for use w/ regulat					
E0585	A	Nebulizer w/ compressor & he					
E0590	A	Dispensing fee dme neb drug					
E0600	A	Suction pump portab hom modl					
E0601	A	Cont airway pressure device					
E0602	E	Breast pump					
E0605	A	Vaporizer room type					
E0606	A	Drainage board postural					
E0607	A	Blood glucose monitor home					
E0608	A	Apnea monitor					
E0609	A	Blood gluc mon w/special fea					
E0610	A	Pacemaker monitr audible/vis					
E0615	A	Pacemaker monitr digital/vis					
E0616	N	Cardiac event recorder					
E0617	A	Automatic ext defibrillator					
E0621	A	Patient lift sling or seat					
E0625	E	Patient lift bathroom or toi					
E0627	A	Seat lift incorp lift-chair					
E0628	A	Seat lift for pt furn-electr					
E0629	A	Seat lift for pt furn-non-el					
E0630	A	Patient lift hydraulic					
E0635	A	Patient lift electric					
E0650	A	Pneuma compresor non-segment					
E0651	A	Pneum compressor segmental					
E0652	A	Pneum compres w/cal pressure					
E0655	A	Pneumatic appliance half arm					
E0660	A	Pneumatic appliance full leg					
E0665	A	Pneumatic appliance full arm					
E0666	A	Pneumatic appliance half leg					
E0667	A	Seg pneumatic appl full leg					
E0668	A	Seg pneumatic appl full arm					
E0669	A	Seg pneumatic appli half leg					
E0671	A	Pressure pneum appl full leg					
E0672	A	Pressure pneum appl full arm					
E0673	A	Pressure pneum appl half leg					
E0690	A	Ultraviolet cabinet					
E0700	E	Safety equipment					
E0710	E	Restraints any type					
E0720	A	Tens two lead					
E0730	A	Tens four lead					
E0731	A	Conductive garment for tens/					
E0740	E	Incontinence treatment systm					
E0744	A	Neuromuscular stim for scoli					
E0745	A	Neuromuscular stim for shock					
E0746	E	Electromyograph biofeedback					
E0747	A	Elec osteogen stim not spine					
E0748	A	Elec osteogen stim spinal					
E0749	N	Elec osteogen stim implanted					
E0751D	N	Pulse generator or receiver					
E0753	N	Neurostimulator electrodes					
E0755	E	Electronic salivary reflex s					
E0756	N	Implantable pulse generator					
E0757	N	Implantable RF receiver					
E0758	A	External RF transmitter					
E0760	E	Osteogen ultrasound stimltor					
E0765	A	Nerve stimulator for tx n&v					
E0776	A	Iv pole					
E0779	A	Amb infusion pump mechanical					
E0780	A	Mech amb infusion pump <8hrs					
E0781	A	External ambulatory infus pu					
E0782	N	Non-programble infusion pump					
E0783	N	Programmable infusion pump					
E0784	A	Ext amb infusn pump insulin					
E0785	N	Replacement impl pump cathet					
E0786	N	Implantable pump replacement					
E0791	A	Parenteral infusion pump sta					
E0830	A	Ambulatory traction device					
E0840	A	Tract frame attach headboard					
E0850	A	Traction stand free standing					
E0855	A	Cervical traction equipment					
E0860	A	Tract equip cervical tract					
E0870	A	Tract frame attach footboard					
E0880	A	Trac stand free stand extrem					

CPT codes and descriptions only are copyright American Medical Association. All Rights Reserved. Applicable FARS/DFARS Apply.
Copyright American Dental Association. All rights reserved.
*Code is new in 2001.

ADDENDUM B.—HOSPITAL OUTPATIENT DEPARTMENT (HOPD) PAYMENT STATUS BY HCPCS CODE AND RELATED INFORMATION—Continued

CPT/ HCPCS	HOPD Status Indicator	Description	APC	Relative Weight	Payment Rate	National Unadjusted Coinsurance	Minimum Unadjusted Coinsurance
E0890	A	Traction frame attach pelvic					
E0900	A	Trac stand free stand pelvic					
E0910	A	Trapeze bar attached to bed					
E0920	A	Fracture frame attached to b					
E0930	A	Fracture frame free standing					
E0935	A	Exercise device passive moti					
E0940	A	Trapeze bar free standing					
E0941	A	Gravity assisted traction de					
E0942	A	Cervical head harness/halter					
E0943	A	Cervical pillow					
E0944	A	Pelvic belt/harness/boot					
E0945	A	Belt/harness extremity					
E0946	A	Fracture frame dual w cross					
E0947	A	Fracture frame attachmnts pe					
E0948	A	Fracture frame attachmnts ce					
E0950	E	Tray					
E0951	E	Loop heel					
E0952	E	Loop tie					
E0953	E	Pneumatic tire					
E0954	E	Wheelchair semi-pneumatic ca					
E0958	E	Whlchr att- conv 1 arm drive					
E0959	E	Amputee adapter					
E0961	E	Wheelchair brake extension					
E0962	A	Wheelchair 1 inch cushion					
E0963	A	Wheelchair 2 inch cushion					
E0964	A	Wheelchair 3 inch cushion					
E0965	A	Wheelchair 4 inch cushion					
E0966	E	Wheelchair head rest extensi					
E0967	E	Wheelchair hand rims					
E0968	E	Wheelchair commode seat					
E0969	E	Wheelchair narrowing device					
E0970	E	Wheelchair no. 2 footplates					
E0971	E	Wheelchair anti-tipping devi					
E0972	A	Transfer board or device					
E0973	E	Wheelchair adjustabl height					
E0974	E	Wheelchair grade-aid					
E0975	E	Wheelchair reinforced seat u					
E0976	E	Wheelchair reinforced back u					
E0977	E	Wheelchair wedge cushion					
E0978	E	Wheelchair belt w/airplane b					
E0979	E	Wheelchair belt with velcro					
E0980	E	Wheelchair safety vest					
E0990	E	Whellchair elevating leg res					
E0991	E	Wheelchair upholstry seat					
E0992	E	Wheelchair solid seat insert					
E0993	E	Wheelchair back upholstery					
E0994	E	Wheelchair arm rest					
E0995	E	Wheelchair calf rest					
E0996	E	Wheelchair tire solid					
E0997	E	Wheelchair caster w/ a fork					
E0998	E	Wheelchair caster w/o a fork					
E0999	E	Wheelchr pneumatic tire w/wh					
E1000	E	Wheelchair tire pneumatic ca					
E1001	E	Wheelchair wheel					
E1031	A	Rollabout chair with casters					
E1035	A	Patient transfer system					
E1050	E	Whelchr fxd full length arms					
E1060	E	Wheelchair detachable arms					
E1065	E	Wheelchair power attachment					
E1066	E	Wheelchair battery charger					
E1069	E	Wheelchair deep cycle batter					
E1070	E	Wheelchair detachable foot r					
E1083	E	Hemi-wheelchair fixed arms					
E1084	E	Hemi-wheelchair detachable a					
E1085	E	Hemi-wheelchair fixed arms					
E1086	E	Hemi-wheelchair detachable a					
E1087	E	Wheelchair lightwt fixed arm					
E1088	E	Wheelchair lightweight det a					
E1089	E	Wheelchair lightwt fixed arm					
E1090	E	Wheelchair lightweight det a					
E1091	E	Wheelchair youth					
E1092	E	Wheelchair wide w/ leg rests					
E1093	E	Wheelchair wide w/ foot rest					
E1100	E	Whchr s-recl fxd arm leg res					

CPT codes and descriptions only are copyright American Medical Association. All Rights Reserved. Applicable FARS/DFARS Apply.
Copyright American Dental Association. All rights reserved.
*Code is new in 2001.

ADDENDUM B.—HOSPITAL OUTPATIENT DEPARTMENT (HOPD) PAYMENT STATUS BY HCPCS CODE AND RELATED INFORMATION—Continued

CPT/ HCPCS	HOPD Status Indicator	Description	APC	Relative Weight	Payment Rate	National Unadjusted Coinsurance	Minimum Unadjusted Coinsurance
E1110	E	Wheelchair semi-recl detach					
E1130	E	Whlchr stand fxd arm ft rest					
E1140	E	Wheelchair standard detach a					
E1150	E	Wheelchair standard w/ leg r					
E1160	E	Wheelchair fixed arms					
E1170	E	Whlchr ampu fxd arm leg rest					
E1171	E	Wheelchair amputee w/o leg r					
E1172	E	Wheelchair amputee detach ar					
E1180	E	Wheelchair amputee w/ foot r					
E1190	E	Wheelchair amputee w/ leg re					
E1195	E	Wheelchair amputee heavy dut					
E1200	E	Wheelchair amputee fixed arm					
E1210	E	Whlchr moto ful arm leg rest					
E1211	E	Wheelchair motorized w/ det					
E1212	E	Wheelchair motorized w full					
E1213	E	Wheelchair motorized w/ det					
E1220	E	Whlchr special size/constrc					
E1221	E	Wheelchair spec size w foot					
E1222	E	Wheelchair spec size w/ leg					
E1223	E	Wheelchair spec size w foot					
E1224	E	Wheelchair spec size w/ leg					
E1225	E	Wheelchair spec sz semi-recl					
E1226	E	Wheelchair spec sz full-recl					
E1227	E	Wheelchair spec sz spec ht a					
E1228	E	Wheelchair spec sz spec ht b					
E1230	A	Power operated vehicle					
E1240	E	Whchr litwt det arm leg rest					
E1250	E	Wheelchair lightwt fixed arm					
E1260	E	Wheelchair lightwt foot rest					
E1270	E	Wheelchair lightweight leg r					
E1280	E	Whchr h-duty det arm leg res					
E1285	E	Wheelchair heavy duty fixed					
E1290	E	Wheelchair hvy duty detach a					
E1295	E	Wheelchair heavy duty fixed					
E1296	E	Wheelchair special seat heig					
E1297	E	Wheelchair special seat dept					
E1298	E	Wheelchair spec seat depth/w					
E1300	E	Whirlpool portable					
E1310	A	Whirlpool non-portable					
E1340	A	Repair for DME, per 15 min					
E1353	A	Oxygen supplies regulator					
E1355	A	Oxygen supplies stand/rack					
E1372	A	Oxy suppl heater for nebuliz					
E1375D	A	Oxygen suppl nebulizer porta					
E1377D	E	Oxygen concentrator to 244 c					
E1378D	E	Oxygen concentrator to 488 c					
E1379D	E	Oxygen concentrator to 732 c					
E1380D	E	Oxygen concentrator to 976 c					
E1381D	E	Oxygen concentrat to 1220 cu					
E1382D	E	Oxygen concentrat to 1464 cu					
E1383D	E	Oxygen concentrat to 1708 cu					
E1384D	E	Oxygen concentrat to 1952 cu					
E1385D	E	Oxygen concentrator > 1952 c					
E1390	A	Oxygen concentrator					
E1399	A	Durable medical equipment mi					
E1405	A	O2/water vapor enrich w/heat					
E1406	A	O2/water vapor enrich w/o he					
E1510	A	Kidney dialysate delivry sys					
E1520	A	Heparin infusion pump for di					
E1530	A	Air bubble detector for dial					
E1540	A	Pressure alarm for dialysis					
E1550	A	Bath conductivity meter					
E1560	A	Blood leak detector for dial					
E1570	A	Adjustable chair for esrd pt					
E1575	A	Transducer protector/fluid b					
E1580	A	Unipuncture control system					
E1590	A	Hemodialysis machine					
E1592	A	Auto interm peritoneal dialy					
E1594	A	Cycler dialysis machine					
E1600	A	Deliv/install equip for dial					
E1610	A	Reverse osmosis water purifi					
E1615	A	Deionizer water purification					
E1620	A	Blood pump for dialysis					
E1625	A	Water softening system					

CPT codes and descriptions only are copyright American Medical Association. All Rights Reserved. Applicable FARS/DFARS Apply.
Copyright American Dental Association. All rights reserved.
*Code is new in 2001.

ADDENDUM B.—HOSPITAL OUTPATIENT DEPARTMENT (HOPD) PAYMENT STATUS BY HCPCS CODE AND RELATED INFORMATION—Continued

CPT/ HCPCS	HOPD Status Indicator	Description	APC	Relative Weight	Payment Rate	National Unadjusted Coinsurance	Minimum Unadjusted Coinsurance
E1630	A	Reciprocating peritoneal dia					
E1632	A	Wearable artificial kidney					
E1635	A	Compact travel hemodialyzer					
E1636	A	Sorbent cartridges for dialy					
E1640	A	Replacement components for d					
E1699	A	Dialysis equipment unspecifi					
E1700	A	Jaw motion rehab system					
E1701	A	Repl cushions for jaw motion					
E1702	A	Repl measr scales jaw motion					
E1800	A	Adjust elbow ext/flex device					
E1805	A	Adjust wrist ext/flex device					
E1810	A	Adjust knee ext/flex device					
E1815	A	Adjust ankle ext/flex device					
E1820	A	Soft interface material					
E1825	A	Adjust finger ext/flex devc					
E1830	A	Adjust toe ext/flex device					
E1900	A	Speech communication device					
G0001	A	Drawing blood for specimen					
G0002	N	Temporary urinary catheter					
G0004	E	ECG transm phys review & int					
G0005	X	ECG 24 hour recording	0097	1.62	$80.35	$62.40	$16.07
G0006	X	ECG transmission & analysis	0097	1.62	$80.35	$62.40	$16.07
G0007	N	ECG phy review & interpret					
G0008	K	Admin influenza virus vac	0354	0.13	$6.33		
G0009	K	Admin pneumococcal vaccine	0354	0.13	$6.33		
G0010	N	Admin hepatitis b vaccine					
G0015	X	Post symptom ECG tracing	0097	1.62	$80.35	$62.40	$16.07
G0016	E	Post symptom ECG md review					
G0025	X	Collagen skin test kit	0343	0.45	$22.32	$12.16	$4.46
G0026	A	Fecal leukocyte examination					
G0027	A	Semen analysis					
G0030	S	PET imaging prev PET single	0285	15.06	$746.92	$415.21	$149.38
G0031	S	PET imaging prev PET multple	0285	15.06	$746.92	$415.21	$149.38
G0032	S	PET follow SPECT 78464 singl	0285	15.06	$746.92	$415.21	$149.38
G0033	S	PET follow SPECT 78464 mult	0285	15.06	$746.92	$415.21	$149.38
G0034	S	PET follow SPECT 76865 singl	0285	15.06	$746.92	$415.21	$149.38
G0035	S	PET follow SPECT 78465 mult	0285	15.06	$746.92	$415.21	$149.38
G0036	S	PET follow cornry angio sing	0285	15.06	$746.92	$415.21	$149.38
G0037	S	PET follow cornry angio mult	0285	15.06	$746.92	$415.21	$149.38
G0038	S	PET follow myocard perf sing	0285	15.06	$746.92	$415.21	$149.38
G0039	S	PET follow myocard perf mult	0285	15.06	$746.92	$415.21	$149.38
G0040	S	PET follow stress echo singl	0285	15.06	$746.92	$415.21	$149.38
G0041	S	PET follow stress echo mult	0285	15.06	$746.92	$415.21	$149.38
G0042	S	PET follow ventriculogm sing	0285	15.06	$746.92	$415.21	$149.38
G0043	S	PET follow ventriculogm mult	0285	15.06	$746.92	$415.21	$149.38
G0044	S	PET following rest ECG singl	0285	15.06	$746.92	$415.21	$149.38
G0045	S	PET following rest ECG mult	0285	15.06	$746.92	$415.21	$149.38
G0046	S	PET follow stress ECG singl	0285	15.06	$746.92	$415.21	$149.38
G0047	S	PET follow stress ECG mult	0285	15.06	$746.92	$415.21	$149.38
G0050	S	Residual urine by ultrasound	0265	1.17	$58.03	$38.08	$11.61
G0101	V	CA screen;pelvic/breast exam	0601	1.00	$49.60	$9.92	$9.92
G0102	N	Prostate ca screening; dre					
G0103	A	Psa, total screening					
G0104	S	CA screen;flexi sigmoidscope	0159	2.83	$140.36		$35.09
G0105	S	Colorectal scrn; hi risk ind	0158	7.98	$395.78		$98.94
G0106	S	Colon CA screen;barium enema	0157	1.79	$88.78		$22.19
G0107	A	CA screen; fecal blood test					
G0108	A	Diab manage trn per indiv					
G0109	A	Diab manage trn ind/group					
G0110	A	Nett pulm-rehab educ; ind					
G0111	A	Nett pulm-rehab educ; group					
G0112	A	Nett;nutrition guid, initial					
G0113	A	Nett;nutrition guid,subseqnt					
G0114	A	Nett; psychosocial consult					
G0115	A	Nett; psychological testing					
G0116	A	Nett; psychosocial counsel					
G0120	S	Colon ca scrn; barium enema	0157	1.79	$88.78		$22.19
G0121	E	Colon ca scrn not hi rsk ind					
G0122	S	Colon ca scrn; barium enema	0157	1.79	$88.78		$22.19
G0123	A	Screen cerv/vag thin layer					
G0124	A	Screen c/v thin layer by MD					
G0125	S	Lung image (PET)	0981	46.40	$2,301.26		$460.25
G0126	S	Lung image (PET) staging	0981	46.40	$2,301.26		$460.25
G0127	T	Trim nail(s)	0009	0.74	$36.70	$9.63	$7.34

CPT codes and descriptions only are copyright American Medical Association. All Rights Reserved. Applicable FARS/DFARS Apply.
Copyright American Dental Association. All rights reserved.
*Code is new in 2001.

ADDENDUM B.—HOSPITAL OUTPATIENT DEPARTMENT (HOPD) PAYMENT STATUS BY HCPCS CODE AND RELATED INFORMATION—Continued

CPT/ HCPCS	HOPD Status Indicator	Description	APC	Relative Weight	Payment Rate	National Unadjusted Coinsurance	Minimum Unadjusted Coinsurance
G0128	E	CORF skilled nursing service					
G0129	P	Partial hosp prog service	0033	4.17	$206.82	$48.17	$41.36
G0130	X	Single energy x-ray study	0261	1.38	$68.44	$38.77	$13.69
G0131	S	CT scan, bone density study	0282	2.38	$118.04	$94.51	$23.61
G0132	S	CT scan, bone density study	0282	2.38	$118.04	$94.51	$23.61
G0141	E	Scr c/v cyto,autosys and md					
G0143	A	Scr c/v cyto,thinlayer,rescr					
G0144	A	Scr c/v cyto,thinlayer,rescr					
G0145	A	Scr c/v cyto,thinlayer,rescr					
G0147	A	Scr c/v cyto, automated sys					
G0148	A	Scr c/v cyto, autosys, rescr					
G0151	E	HHCP-serv of pt,ea 15 min					
G0152	E	HHCP-serv of ot,ea 15 min					
G0153	E	HHCP-svs of s/l path,ea 15mn					
G0154	E	HHCP-svs of rn,ea 15 min					
G0155	E	HHCP-svs of csw,ea 15 min					
G0156	E	HHCP-svs of aide,ea 15 min					
G0159D	T	Perc declot dialysis graft	0103	13.09	$649.21	$295.70	$129.84
*G0160D	S	Cryo. ablation, prostate	0981	46.40	$2,301.26		$460.25
G0161D	X	Echo guide for cryo probes	0268	2.23	$110.60	$69.51	$22.12
G0163	S	Pet for rec of colorectal ca	0981	46.40	$2,301.26		$460.25
G0164	S	Pet for lymphoma staging	0981	46.40	$2,301.26		$460.25
G0165	S	Pet,rec of melanoma/met ca	0981	46.40	$2,301.26		$460.25
G0166	T	Extrnl counterpulse, per tx	0972	3.09	$153.26		$30.65
G0167	E	Hyperbaric oz tx;no md reqrd					
G0168	T	Wound closure by adhesive	0970	0.52	$25.79		$5.16
G0169D	T	Removal tissue; no anesthsia	0013	0.91	$45.13	$17.66	$9.03
G0170D	T	Skin biograft	0025	3.74	$185.49	$70.66	$37.10
G0171D	T	Skin biograft add-on	0025	3.74	$185.49	$70.66	$37.10
G0172D	P	Partial hosp prog service	0033	4.17	$206.82	$48.17	$41.36
G0173	S	Stereotactic radiosurgery	0302	8.21	$407.18	$216.55	$81.44
G0174	S	IMRT , per session	0302	8.21	$407.18	$216.55	$81.44
G0175	V	Interdisciplinary team conf	0602	1.66	$82.33	$16.47	$16.47
*G0176	P	OPPS/PHP;activity therapy	0033	4.17	$206.82	$48.17	$41.36
*G0177	P	OPPS/PHP; train & educ serv	0033	4.17	$206.82	$48.17	$41.36
*G0178	S	Intensity modulated radiation	0302	8.21	$407.18	$216.55	$81.44
*G0179	E	Phys recertification, HHA pt					
*G0180	E	Phys certification, HHA pt					
*G0181	E	Home health care supervision					
*G0182	E	Hospice care supervision					
*G0183	T	Ocular photodynamic therapy	0235	2.94	$145.81	$78.91	$29.16
*G0184	T	Ocular photocoagulation	0235	33.96	$1,684.28	$852.68	$336.86
*G0185	T	Transpuppillary thermotx	0235	6.70	$332.29	$147.96	$66.46
*G0186	T	Dstry eye lesn,fdr vssl tech	0235	6.70	$332.29	$147.96	$66.46
*G0187	T	Dstry mclr drusen,photocoag	0235	33.96	$1,684.28	$852.68	$336.86
*G0188	X	Xray lwr extrmty-full lngth		1.38	$68.44	$38.77	$13.69
*G0190	N	Immunization administration					
*G0191	N	Immunization admin,each add					
*G0192	N	Immunization oral/intranasal					
*G0195	A	Clinical eval, swallowing					
*G0196	A	Radioisotope eval, swallowing					
*G0197	A	Eval, speech generating device					
*G0198	A	Trng, speech generating device					
*G0199	A	Re-evaluation, speech device					
*G0200	A	Eval, voice prosthetic					
*G0201	A	Trng, voice prosthetic					
*G9001	E	Coordinated care fee					
*G9002	E	Coordinated care fee					
*G9003	E	Coordinated care fee					
*G9004	E	Coordinated care fee					
*G9005	E	Coordinated care fee					
*G9006	E	Coordinated care fee					
*G9007	E	Coordinated care fee					
*G9008	E	Coordinated care fee					
*G9016	A	Demo-smoking cessation coun					
J0120	N	Tetracyclin injection					
*J0130	G	Abciximab injection	1605		$513.02		$68.74
J0150	K	Injection adenosine 6 MG	0917	0.36	$17.86		$3.57
J0151	E	Adenosine injection					
J0170	N	Adrenalin epinephrin inject					
J0190	N	Inj biperiden lactate/5 mg					
J0200	N	Alatrofloxacin mesylate					
J0205	G	Alglucerase injection	0900		$37.53		$5.03
J0207	G	Amifostine	7000		$350.31		$46.94

CPT codes and descriptions only are copyright American Medical Association. All Rights Reserved. Applicable FARS/DFARS Apply.
Copyright American Dental Association. All rights reserved.
*Code is new in 2001.

ADDENDUM B.—HOSPITAL OUTPATIENT DEPARTMENT (HOPD) PAYMENT STATUS BY HCPCS CODE AND RELATED INFORMATION—Continued

CPT/ HCPCS	HOPD Status Indicator	Description	APC	Relative Weight	Payment Rate	National Unadjusted Coinsurance	Minimum Unadjusted Coinsurance
J0210	N	Methyldopate hcl injection					
J0256	G	Alpha 1 proteinase inhibitor	0901		$2.09		$.28
J0270	E	Alprostadil for injection					
J0275	E	Alprostadil urethral suppos					
J0280	N	Aminophyllin 250 MG inj					
J0282	N	Amiodarone HCl					
J0285	N	Amphotericin B					
J0286	G	Amphotericin B lipid complex	7001		$95.00		$12.73
J0290	N	Ampicillin 500 MG inj					
J0295	N	Ampicillin sodium per 1.5 gm					
J0300	N	Amobarbital 125 MG inj					
J0330	N	Succinycholine chloride inj					
J0340	N	Nandrolon phenpropionate inj					
*J0350	G	Injection anistreplase 30 u	1606		$2,693.80		$360.97
J0360	N	Hydralazine hcl injection					
J0380	N	Inj metaraminol bitartrate					
J0390	N	Chloroquine injection					
J0395	N	Arbutamine HCl injection					
J0400	N	Inj trimethaphan camsylate					
J0456	N	Azithromycin					
J0460	N	Atropine sulfate injection					
J0470	N	Dimecaprol injection					
J0475	N	Baclofen 10 MG injection					
J0476	E	Baclofen 50 mcg intrathecal trial					
J0500	N	Dicyclomine injection					
J0510	N	Benzquinamide injection					
J0515	N	Inj benztropine mesylate					
J0520	N	Bethanechol chloride inject					
J0530	N	Penicillin g benzathine inj					
J0540	N	Penicillin g benzathine inj					
J0550	N	Penicillin g benzathine inj					
J0560	N	Penicillin g benzathine inj					
J0570	N	Penicillin g benzathine inj					
J0580	N	Penicillin g benzathine inj					
J0585	G	Botulinum toxin a per unit	0902		$4.39		$.59
J0590	N	Ethylnorepinephrine hcl inj					
J0600	N	Edetate calcium disodium inj					
J0610	N	Calcium gluconate injection					
J0620	N	Calcium glycer & lact/10 ML					
J0630	N	Calcitonin salmon injection					
J0635	N	Calcitriol injection					
J0640	G	Leucovorin calcium injection	0725		$49.73		$6.66
J0670	N	Inj mepivacaine HCL/10 ml					
J0690	N	Cefazolin sodium injection					
J0694	N	Cefoxitin sodium injection					
J0695	N	Cefonocid sodium injection					
J0696	N	Ceftriaxone sodium injection					
J0697	N	Sterile cefuroxime injection					
J0698	N	Cefotaxime sodium injection					
J0702	N	Betamethasone acet&sod phosp					
J0704	N	Betamethasone sod phosp/4 MG					
J0710	N	Cephapirin sodium injection					
J0713	N	Inj ceftazidime per 500 mg					
J0715	N	Ceftizoxime sodium / 500 MG					
J0720	N	Chloramphenicol sodium injec					
J0725	N	Chorionic gonadotropin/1000u					
J0730	N	Chlorpheniramin maleate inj					
J0735	N	Clonidine hydrochloride					
J0740	N	Cidofovir injection					
J0743	N	Cilastatin sodium injection					
J0745	N	Inj codeine phosphate /30 MG					
J0760	N	Colchicine injection					
J0770	N	Colistimethate sodium inj					
J0780	N	Prochlorperazine injection					
J0800	N	Corticotropin injection					
J0810	N	Cortisone injection					
J0835	N	Inj cosyntropin per 0.25 MG					
J0850	G	Cytomegalovirus imm IV /vial	0903		$370.50		$49.65
J0895	N	Deferoxamine mesylate inj					
J0900	N	Testosterone enanthate inj					
J0945	N	Brompheniramine maleate inj					
J0970	N	Estradiol valerate injection					
J1000	N	Depo-estradiol cypionate inj					
J1020	N	Methylprednisolone 20 MG inj					

CPT codes and descriptions only are copyright American Medical Association. All Rights Reserved. Applicable FARS/DFARS Apply.
Copyright American Dental Association. All rights reserved.
*Code is new in 2001.

ADDENDUM B.—HOSPITAL OUTPATIENT DEPARTMENT (HOPD) PAYMENT STATUS BY HCPCS CODE AND RELATED INFORMATION—Continued

CPT/ HCPCS	HOPD Status Indicator	Description	APC	Relative Weight	Payment Rate	National Unadjusted Coinsurance	Minimum Unadjusted Coinsurance
J1030	N	Methylprednisolone 40 MG inj					
J1040	N	Methylprednisolone 80 MG inj					
J1050	N	Medroxyprogesterone inj					
J1055	E	Medrxyprogester acetate inj					
J1060	N	Testosterone cypionate 1 ML					
J1070	N	Testosterone cypionat 100 MG					
J1080	N	Testosterone cypionat 200 MG					
J1090	N	Testosterone cypionate 50 MG					
J1095	N	Inj dexamethasone acetate					
J1100	N	Dexamethasone sodium phos					
J1110	N	Inj dihydroergotamine mesylt					
J1120	N	Acetazolamid sodium injectio					
J1160	N	Digoxin injection					
J1165	N	Phenytoin sodium injection					
J1170	N	Hydromorphone injection					
J1180	N	Dyphylline injection					
J1190	G	Dexrazoxane HCl injection	0726		$161.11		$21.59
J1200	N	Diphenhydramine hcl injectio					
J1205	N	Chlorothiazide sodium inj					
J1212	N	Dimethyl sulfoxide 50% 50 ML					
J1230	N	Methadone injection					
J1240	N	Dimenhydrinate injection					
J1245	K	Dipyridamole injection	0917	0.36	$17.86		$3.57
J1250	N	Inj dobutamine HCL/250 mg					
J1260	G	Dolasetron mesylate	0750		$14.81		$1.98
J1320	N	Amitriptyline injection					
J1325	G	Epoprostenol injection	7003		$16.53		$2.22
*J1327	G	Eptifibatide injection	1607		$12.57		$1.68
J1330	N	Ergonovine maleate injection					
J1362	N	Erythromycin glucep / 250 MG					
J1364	N	Erythro lactobionate /500 MG					
J1380	N	Estradiol valerate 10 MG inj					
J1390	N	Estradiol valerate 20 MG inj					
J1410	N	Inj estrogen conjugate 25 MG					
J1435	N	Injection estrone per 1 MG					
J1436	G	Etidronate disodium inj	0727		$63.65		$8.53
*J1438	G	Etanercept injection	1608		$134.42		$18.01
J1440	G	Filgrastim 300 mcg injection	0728		$171.38		$22.96
J1441	G	Filgrastim 480 mcg injection	7049		$273.03		$35.06
J1450	N	Fluconazole					
J1452	N	Intraocular Fomivirsen na 1.65 MG					
J1455	N	Foscarnet sodium injection					
J1460	N	Gamma globulin 1 CC inj					
J1470	E	Gamma globulin 2 CC inj					
J1480	E	Gamma globulin 3 CC inj					
J1490	E	Gamma globulin 4 CC inj					
J1500	E	Gamma globulin 5 CC inj					
J1510	E	Gamma globulin 6 CC inj					
J1520	E	Gamma globulin 7 CC inj					
J1530	E	Gamma globulin 8 CC inj					
J1540	E	Gamma globulin 9 CC inj					
J1550	E	Gamma globulin 10 CC inj					
J1560	E	Gamma globulin > 10 CC inj					
J1561	G	Immune globulin 500 mg	0905		$27.28		$3.33
J1562D	G	Immune globulin 5 gms	7004		$272.80		$33.28
J1563D	N	IV immune globulin 1 GM					
J1565	G	RSV-ivig	0906		$427.73		$57.32
J1570	K	Ganciclovir sodium injection	0907	0.45	$22.26		$4.45
J1580	N	Garamycin gentamicin inj					
J1600	N	Gold sodium thiomaleate inj					
J1610	N	Glucagon hydrochloride/1 MG					
J1620	G	Gonadorelin hydroch/ 100 mcg	7005		$14.80		$1.98
J1626	G	Granisetron HCl injection	0764		$1.85		$.25
J1630	N	Haloperidol injection					
J1631	N	Haloperidol decanoate inj					
J1642	N	Inj heparin sodium per 10 u					
J1644	N	Inj heparin sodium per 1000u					
J1645	N	Dalteparin sodium					
J1650	G	Enoxaparin sodium 10 mg	9998		$5.53		$.79
J1670	G	Tetanus immune globulin inj	0908		$102.60		$13.75
J1690	N	Prednisolone tebutate inj					
J1700	N	Hydrocortisone acetate inj					
J1710	N	Hydrocortisone sodium ph inj					
J1720	N	Hydrocortisone sodium succ i					

CPT codes and descriptions only are copyright American Medical Association. All Rights Reserved. Applicable FARS/DFARS Apply.
Copyright American Dental Association. All rights reserved.
*Code is new in 2001.

ADDENDUM B.—HOSPITAL OUTPATIENT DEPARTMENT (HOPD) PAYMENT STATUS BY HCPCS CODE AND RELATED INFORMATION—Continued

CPT/ HCPCS	HOPD Status Indicator	Description	APC	Relative Weight	Payment Rate	National Unadjusted Coinsurance	Minimum Unadjusted Coinsurance
J1730	N	Diazoxide injection					
J1739	N	Hydroxyprogesterone cap 125					
J1741	N	Hydroxyprogesterone cap 250					
J1742	N	Ibutilide fumarate injection					
J1745	G	Infliximab injection	7043		$58.08		$7.78
J1750	N	Iron dextran					
J1785	G	Injection imiglucerase /unit	0916		$3.75		$.50
J1790	N	Droperidol injection					
J1800	N	Propranolol injection					
J1810	G	Droperidol/fentanyl inj	7047		$7.02		$.90
J1820	N	Insulin injection					
J1825	G	Interferon beta-1a	0909		$204.73		$27.43
J1830	G	Interferon beta-1b / .25 MG	0910		$57.00		$7.64
J1840	N	Kanamycin sulfate 500 MG inj					
J1850	N	Kanamycin sulfate 75 MG inj					
J1885	N	Ketorolac tromethamine inj					
J1890	N	Cephalothin sodium injection					
J1910	N	Kutapressin injection					
J1930	N	Propiomazine injection					
J1940	N	Furosemide injection					
J1950	G	Leuprolide acetate /3.75 MG	0800		$492.71		$63.27
J1955	N	Inj levocarnitine per 1 gm					
J1956	N	Levofloxacin injection					
J1960	N	Levorphanol tartrate inj					
J1970	N	Methotrimeprazine injection					
J1980	N	Hyoscyamine sulfate inj					
J1990	N	Chlordiazepoxide injection					
J2000	N	Lidocaine injection					
J2010	N	Lincomycin injection					
J2060	N	Lorazepam injection					
J2150	N	Mannitol injection					
J2175	N	Meperidine hydrochl /100 MG					
J2180	N	Meperidine/promethazine inj					
J2210	N	Methylergonovin maleate inj					
J2240	N	Metocurine iodide injection					
J2250	N	Inj midazolam hydrochloride					
J2260	K	Inj milrinone lactate / 5 ML	7007	0.47	$23.31		$4.66
J2270	N	Morphine sulfate injection					
J2271	N	Morphine so4 injection 100mg					
J2275	G	Morphine sulfate injection	7010		$7.41		$.99
J2300	N	Inj nalbuphine hydrochloride					
J2310	N	Inj naloxone hydrochloride					
J2320	N	Nandrolone decanoate 50 MG					
J2321	N	Nandrolone decanoate 100 MG					
J2322	N	Nandrolone decanoate 200 MG					
J2330	N	Thiothixene injection					
J2350	N	Niacinamide/niacin injection					
J2352	G	Octreotide acetate injection	7031		$115.34		$15.46
J2355	G	Oprelvekin injection	7011		$236.31		$31.67
J2360	N	Orphenadrine injection					
J2370	N	Phenylephrine hcl injection					
J2400	N	Chloroprocaine hcl injection					
J2405	G	Ondansetron hcl injection	0768		$6.09		$.82
J2410	N	Oxymorphone hcl injection					
J2430	G	Pamidronate disodium /30 MG	0730		$232.51		$31.16
J2440	N	Papaverin hcl injection					
J2460	N	Oxytetracycline injection					
J2480	N	Hydrochlorides of opium inj					
J2500	N	Paricalcitol					
J2510	N	Penicillin g procaine inj					
J2512	N	Inj pentagastrin per 2 ML					
J2515	N	Pentobarbital sodium inj					
J2540	N	Penicillin g potassium inj					
J2543	N	Piperacillin/tazobactam					
J2545	A	Pentamidine isethionte/300mg					
J2550	N	Promethazine hcl injection					
J2560	N	Phenobarbital sodium inj					
J2590	N	Oxytocin injection					
J2597	E	Inj desmopressin acetate					
J2640	N	Prednisolone sodium ph inj					
J2650	N	Prednisolone acetate inj					
J2670	N	Totazoline hcl injection					
J2675	N	Inj progesterone per 50 MG					
J2680	N	Fluphenazine decanoate 25 MG					

CPT codes and descriptions only are copyright American Medical Association. All Rights Reserved. Applicable FARS/DFARS Apply.
Copyright American Dental Association. All rights reserved.
*Code is new in 2001.

ADDENDUM B.—HOSPITAL OUTPATIENT DEPARTMENT (HOPD) PAYMENT STATUS BY HCPCS CODE AND RELATED INFORMATION—Continued

CPT/ HCPCS	HOPD Status Indicator	Description	APC	Relative Weight	Payment Rate	National Unadjusted Coinsurance	Minimum Unadjusted Coinsurance
J2690	N	Procainamide hcl injection					
J2700	N	Oxacillin sodium injection					
J2710	N	Neostigmine methylslfte inj					
J2720	N	Inj protamine sulfate/10 MG					
J2725	N	Inj protirelin per 250 mcg					
J2730	N	Pralidoxime chloride inj					
J2760	N	Phentolaine mesylate inj					
J2765	G	Metoclopramide hcl injection	0754		$2.00		$.27
J2770	G	Quinupristin/dalfopristin	1024		$102.05		$13.67
J2780	N	Ranitidine hydrochloride inj					
J2790	G	Rho d immune globulin inj	0884		$35.91		$4.38
*J2792	G	Rho(D) immune globulin h, sd	1609		$20.55		$2.51
J2795	N	Ropivacaine HCl injection					
J2800	N	Methocarbamol injection					
J2810	N	Inj theophylline per 40 MG					
J2820	G	Sargramostim injection	0731		$27.42		$3.67
J2860	N	Secobarbital sodium inj					
J2910	N	Aurothioglucose injection					
J2912	N	Sodium chloride injection					
J2915	N	NA Ferric Gluconate Complex					
J2920	N	Methylprednisolone injection					
J2930	N	Methylprednisolone injection					
J2950	N	Promazine hcl injection					
J2970	N	Methicillin sodium injection					
J2993	G	Reteplase injection	9005		$1,306.25		$175.04
J2994D	G	Reteplase double bolus	0914		$2,612.50		$350.08
J2995	K	Inj streptokinase /250000 IU	0911	1.76	$87.25		$17.45
J2996D	K	Alteplase recombinant inj	0915	3.80	$188.46		$37.69
J2997	G	Alteplase recombinant, 1 mg	7048	0.38	$18.70		$3.74
J3000	N	Streptomycin injection					
J3010	G	Fentanyl citrate injection	7014		$.98		$.13
J3030	N	Sumatriptan succinate / 6 MG					
J3070	N	Pentazocine hcl injection					
J3080	N	Chlorprothixene injection					
J3105	N	Terbutaline sulfate inj					
J3120	N	Testosterone enanthate inj					
J3130	N	Testosterone enanthate inj					
J3140	N	Testosterone suspension inj					
J3150	N	Testosteron propionate inj					
J3230	N	Chlorpromazine hcl injection					
*J3240	E	Thyrotropin injection					
J3245	G	Tirofiban hydrochloride	7041		$399.00		$53.47
J3250	N	Trimethobenzamide hcl inj					
J3260	N	Tobramycin sulfate injection					
J3265	N	Injection torsemide 10 mg/ml					
J3270	N	Imipramine hcl injection					
J3280	G	Thiethylperazine maleate inj	0755		$5.02		$.67
J3301	N	Triamcinolone acetonide inj					
J3302	N	Triamcinolone diacetate inj					
J3303	N	Triamcinolone hexacetonl inj					
J3305	G	Inj trimetrexate glucoronate	7045		$69.83		$9.36
J3310	N	Perphenazine injection					
J3320	N	Spectinomycn di-hcl inj					
J3350	N	Urea injection					
J3360	N	Diazepam injection					
J3364	N	Urokinase 5000 IU injection					
J3365	K	Urokinase 250,000 IU inj	7036	6.78	$336.29		$67.26
J3370	N	Vancomycin hcl injection					
J3390	N	Methoxamine injection					
J3400	N	Triflupromazine hcl inj					
J3410	N	Hydroxyzine hcl injection					
J3420	N	Vitamin b12 injection					
J3430	N	Vitamin k phytonadione inj					
J3450	N	Mephentermine sulfate inj					
J3470	N	Hyaluronidase injection					
J3475	N	Inj magnesium sulfate					
J3480	N	Inj potassium chloride					
J3485	N	Zidovudine					
J3490	N	Drugs unclassified injection					
J3520	E	Edetate disodium per 150 mg					
J3530	N	Nasal vaccine inhalation					
J3535	E	Metered dose inhaler drug					
J3570	E	Laetrile amygdalin vit B17					
J7030	N	Normal saline solution infus					

CPT codes and descriptions only are copyright American Medical Association. All Rights Reserved. Applicable FARS/DFARS Apply.
Copyright American Dental Association. All rights reserved.
*Code is new in 2001.

ADDENDUM B.—HOSPITAL OUTPATIENT DEPARTMENT (HOPD) PAYMENT STATUS BY HCPCS CODE AND RELATED INFORMATION—Continued

CPT/ HCPCS	HOPD Status Indicator	Description	APC	Relative Weight	Payment Rate	National Unadjusted Coinsurance	Minimum Unadjusted Coinsurance
J7040	N	Normal saline solution infus					
J7042	N	5% dextrose/normal saline					
J7050	N	Normal saline solution infus					
J7051	N	Sterile saline/water					
J7060	N	5% dextrose/water					
J7070	N	D5w infusion					
J7100	N	Dextran 40 infusion					
J7110	N	Dextran 75 infusion					
J7120	N	Ringers lactate infusion					
J7130	N	Hypertonic saline solution					
J7190	G	Factor viii	0925		$.88		$.12
J7191	G	Factor VIII (porcine)	0926		$2.09		$.28
J7192	G	Factor viii recombinant	0927		$1.17		$.16
J7194	G	Factor ix complex	0928		$.71		$.10
J7197	G	Antithrombin iii injection	0930		$.82		$.11
J7198	G	Anti-inhibitor	0929		$1.43		$.19
J7199	E	Hemophilia clot factor noc					
J7300	E	Intraut copper contraceptive					
J7310	G	Ganciclovir long act implant	0913		$4,750.00		$636.50
J7315	G	Sodium hyaluronate injection	7315		$125.59		$16.83
*J7320	G	Hylan G-F 20 injection	1611		$204.87		$27.45
J7330	G	Cultured chondrocytes implnt	1059		$14,250.00		$2,010.00
J7500	G	Azathioprine oral 50mg	0886		$1.24		$.17
J7501	G	Azathioprine parenteral	0887		$67.88		$9.10
J7502	G	Cyclosporine oral 100 mg	0888		$5.80		$.78
J7504	G	Lymphocyte immune globulin	0890		$249.13		$30.39
J7505	G	Muromonab-CD3, 5 mg	7038		$741.00		$99.29
J7506	N	Prednisone oral					
J7507	G	Tacrolimus oral per 1 MG	0891		$2.66		$.36
J7508	E	Tacrolimus oral per 5 MG					
J7509	N	Methylprednisolone oral					
J7510	N	Prednisolone oral per 5 mg					
*J7513	G	Daclizumab, parenteral	1612		$397.29		$53.24
J7515	N	Cyclosporine oral 25 mg					
J7516	G	Cyclosporin parenteral 250mg	0889		$15.81		$2.12
J7517	N	Mycophenolate mofetil oral					
J7520	G	Sirolimus, oral	9106		$6.51		$.87
J7525	E	Tacrolimus injection					
J7599	E	Immunosuppressive drug noc					
J7608	A	Acetylcysteine inh sol u d					
J7610D	A	Acetylcysteine 10% injection					
J7615D	A	Acetylcysteine 20% injection					
J7618	A	Albuterol inh sol con					
J7619	A	Albuterol inh sol u d					
J7620D	A	Albuterol sulfate .083%/ml					
J7625D	A	Albuterol sulfate .5% inj					
J7627D	A	Bitolterolmesylate inhal sol					
J7628	A	Bitolterol mes inhal sol con					
J7629	A	Bitolterol mes inh sol u d					
J7630D	A	Cromolyn sodium injection					
J7631	A	Cromolyn sodium inh sol u d					
J7635	A	Atropine inhal sol con					
J7636	A	Atropine inhal sol unit dose					
J7637	A	Dexamethasone inhal sol con					
J7638	A	Dexamethasone inhal sol u d					
J7639	A	Dornase alpha inhal sol u d					
J7640D	A	Epinephrine injection					
J7642	A	Glycopyrrolate inhal sol con					
J7643	A	Glycopyrrolate inhal sol u d					
J7644	A	Ipratropium brom inh sol u d					
J7645D	A	Ipratropium bromide .02%/ml					
J7648	A	Isoetharine hcl inh sol con					
J7649	A	Isoetharine hcl inh sol u d					
J7650D	A	Isoetharine hcl .1% inj					
J7651D	A	Isoetharine hcl .125% inj					
J7652D	A	Isoetharine hcl .167% inj					
J7653D	A	Isoetharine hcl .2%/ inj					
J7654D	A	Isoetharine hcl .25% inj					
J7655D	A	Isoetharine hcl 1% inj					
J7658	A	Isoproterenolhcl inh sol con					
J7659	A	Isoproterenol hcl inh sol ud					
J7660D	A	Isoproterenol hcl .5% inj					
J7665D	A	Isoproterenol hcl 1% inj					
J7668	A	Metaproterenol inh sol con					

CPT codes and descriptions only are copyright American Medical Association. All Rights Reserved. Applicable FARS/DFARS Apply.
Copyright American Dental Association. All rights reserved.
*Code is new in 2001.

ADDENDUM B.—HOSPITAL OUTPATIENT DEPARTMENT (HOPD) PAYMENT STATUS BY HCPCS CODE AND RELATED INFORMATION—Continued

CPT/ HCPCS	HOPD Status Indicator	Description	APC	Relative Weight	Payment Rate	National Unadjusted Coinsurance	Minimum Unadjusted Coinsurance
J7669	A	Metaproterenol inh sol u d					
J7670D	A	Metaproterenol sulfate .4%					
J7672D	A	Metaproterenol sulfate .6%					
J7675D	A	Metaproterenol sulfate 5%					
J7680	A	Terbutaline so4 inh sol con					
J7681	A	Terbutaline so4 inh sol u d					
J7682	A	Tobramycin inhalation sol					
J7683	A	Triamcinolone inh sol con					
J7684	A	Triamcinolone inh sol u d					
J7699	A	Inhalation solution for DME					
J7799	A	Non-inhalation drug for DME					
J8499	E	Oral prescrip drug non chemo					
J8510	G	Oral busulfan	7015		$1.73		$.23
J8520	G	Capecitabine, oral, 150 mg	7042		$1.94		$.26
J8521	N	Capecitabine, oral, 500 mg					
J8530	G	Cyclophosphamide oral 25 MG	0801		$2.12		$.28
J8560	G	Etoposide oral 50 MG	0802		$45.95		$6.16
J8600	G	Melphalan oral 2 MG	0803		$2.07		$.30
J8610	G	Methotrexate oral 2.5 MG	0826		$2.92		$.39
J8700	G	Temozolmide, oral 5 mg	1086		$5.70		$.76
J8999	E	Oral prescription drug chemo					
J9000	G	Doxorubic hcl 10 MG vl chemo	0847		$15.79		$2.12
J9001	G	Doxorubicin hcl liposome inj	7046		$311.72		$41.77
J9015	G	Aldesleukin/single use vial	0807		$569.76		$76.35
J9020	G	Asparaginase injection	0814		$57.41		$7.69
J9031	G	Bcg live intravesical vac	0809		$159.39		$19.45
J9040	G	Bleomycin sulfate injection	0857		$294.48		$39.46
J9045	G	Carboplatin injection	0811		$98.90		$13.25
J9050	G	Carmus bischl nitro inj	0812		$103.27		$13.84
J9060	G	Cisplatin 10 MG injection	0813		$42.18		$5.65
J9062	E	Cisplatin 50 MG injection					
J9065	G	Inj cladribine per 1 MG	0858		$53.47		$7.16
J9070	G	Cyclophosphamide 100 MG inj	0815		$6.13		$.82
J9080	E	Cyclophosphamide 200 MG inj					
J9090	E	Cyclophosphamide 500 MG inj					
J9091	E	Cyclophosphamide 1.0 grm inj					
J9092	E	Cyclophosphamide 2.0 grm inj					
J9093	G	Cyclophosphamide lyophilized	0816		$6.13		$.82
J9094	E	Cyclophosphamide lyophilized					
J9095	E	Cyclophosphamide lyophilized					
J9096	E	Cyclophosphamide lyophilized					
J9097	E	Cyclophosphamide lyophilized					
J9100	G	Cytarabine hcl 100 MG inj	0817		$5.94		$.80
J9110	E	Cytarabine hcl 500 MG inj					
J9120	G	Dactinomycin actinomycin d	0818		$12.73		$1.71
J9130	G	Dacarbazine 10 MG inj	0819		$1.13		$.15
J9140	E	Dacarbazine 200 MG inj					
J9150	G	Daunorubicin	0820		$80.04		$10.73
J9151	G	Daunorubicin citrate liposom	0821		$64.60		$8.66
J9160	G	Denileukin diftitox, 300 mcg	1084		$942.88		$126.35
J9165	G	Diethylstilbestrol injection	0822		$4.20		$.56
J9170	G	Docetaxel	0823		$283.65		$38.01
J9180	E	Epirubicin HCl injection					
J9181	G	Etoposide 10 MG inj	0824		$4.06		$.54
J9182	E	Etoposide 100 MG inj					
J9185	G	Fludarabine phosphate inj	0842		$237.03		$31.76
J9190	G	Fluorouracil injection	0859		$2.75		$.37
J9200	G	Floxuridine injection	0827		$129.56		$17.36
J9201	G	Gemcitabine HCl	0828		$88.46		$11.85
J9202	G	Goserelin acetate implant	0810		$446.49		$59.83
J9206	G	Irinotecan injection	0830		$117.81		$15.79
J9208	G	Ifosfomide injection	0831		$141.50		$18.96
J9209	G	Mesna injection	0732		$36.51		$4.89
J9211	G	Idarubicin hcl injection	0832		$341.38		$45.75
J9212	G	Interferon alfacon-1	0833		$3.91		$.52
J9213	G	Interferon alfa-2a inj	0834		$33.22		$4.45
J9214	G	Interferon alfa-2b inj	0836		$11.28		$1.51
J9215	G	Interferon alfa-n3 inj	0865		$7.86		$1.05
J9216	G	Interferon gamma 1-b inj	0838		$199.50		$26.73
J9217	G	Leuprolide acetate suspnsion	9217		$592.60		$79.40
J9218	G	Leuprolide acetate injection	0861		$22.90		$3.07
J9219	N	Leuprolide acetate implant					
J9230	G	Mechlorethamine hcl inj	0839		$11.01		$1.48
J9245	G	Inj melphalan hydrochl 50 MG	0840		$363.48		$48.71

CPT codes and descriptions only are copyright American Medical Association. All Rights Reserved. Applicable FARS/DFARS Apply.
Copyright American Dental Association. All rights reserved.
*Code is new in 2001.

ADDENDUM B.—HOSPITAL OUTPATIENT DEPARTMENT (HOPD) PAYMENT STATUS BY HCPCS CODE AND RELATED INFORMATION—Continued

CPT/ HCPCS	HOPD Status Indicator	Description	APC	Relative Weight	Payment Rate	National Unadjusted Coinsurance	Minimum Unadjusted Coinsurance
J9250	G	Methotrexate sodium inj	0841		$.45		$.06
J9260	E	Methotrexate sodium inj					
J9265	G	Paclitaxel injection	0863		$173.50		$23.25
J9266	G	Pegaspargase/singl dose vial	0843		$1,321.65		$177.10
J9268	G	Pentostatin injection	0844		$1,562.75		$209.41
J9270	G	Plicamycin (mithramycin) inj	0860		$93.80		$12.57
J9280	G	Mitomycin 5 MG inj	0862		$121.65		$16.30
J9290	E	Mitomycin 20 MG inj					
J9291	E	Mitomycin 40 MG inj					
J9293	G	Mitoxantrone hydrochl / 5 MG	0864		$223.02		$29.88
J9310	G	Rituximab cancer treatment	0849		$420.29		$56.32
J9320	G	Streptozocin injection	0850		$65.79		$8.82
J9340	G	Thiotepa injection	0851		$100.30		$13.44
J9350	G	Topotecan	0852		$573.75		$76.88
*J9355	G	Trastuzumab	1613		$48.85		$6.55
*J9357	G	Valrubicin, 200 mg	1614		$423.23		$56.71
J9360	G	Vinblastine sulfate inj	0853		$4.11		$.55
J9370	G	Vincristine sulfate 1 MG inj	0854		$30.16		$4.04
J9375	E	Vincristine sulfate 2 MG inj					
J9380	E	Vincristine sulfate 5 MG inj					
J9390	G	Vinorelbine tartrate/10 mg	0855		$75.51		$10.12
J9600	G	Porfimer sodium	0856		$2,603.67		$348.89
J9999	E	Chemotherapy drug					
K0001	A	Standard wheelchair					
K0002	A	Stnd hemi (low seat) whlchr					
K0003	A	Lightweight wheelchair					
K0004	A	High strength ltwt whlchr					
K0005	A	Ultralightweight wheelchair					
K0006	A	Heavy duty wheelchair					
K0007	A	Extra heavy duty wheelchair					
K0008	A	Cstm manual wheelchair/base					
K0009	A	Other manual wheelchair/base					
K0010	A	Stnd wt frame power whlchr					
K0011	A	Stnd wt pwr whlchr w control					
K0012	A	Ltwt portbl power whlchr					
K0013	A	Custom power whlchr base					
K0014	A	Other power whlchr base					
K0015	A	Detach non-adjus hght armrst					
K0016	A	Detach adjust armrst cmplete					
K0017	A	Detach adjust armrest base					
K0018	A	Detach adjust armrst upper					
K0019	A	Arm pad each					
K0020	A	Fixed adjust armrest pair					
K0021	A	Anti-tipping device each					
K0022	A	Reinforced back upholstery					
K0023	A	Planr back insrt foam w/strp					
K0024	A	Plnr back insrt foam w/hrdwr					
K0025	A	Hook-on headrest extension					
K0026	A	Back upholst lgtwt whlchr					
K0027	A	Back upholst other whlchr					
K0028	A	Manual fully reclining back					
K0029	A	Reinforced seat upholstery					
K0030	A	Solid plnr seat sngl dnsfoam					
K0031	A	Safety belt/pelvic strap					
K0032	A	Seat uphols lgtwt whlchr					
K0033	A	Seat upholstery other whlchr					
K0034	A	Heel loop each					
K0035	A	Heel loop with ankle strap					
K0036	A	Toe loop each					
K0037	A	High mount flip-up footrest					
K0038	A	Leg strap each					
K0039	A	Leg strap h style each					
K0040	A	Adjustable angle footplate					
K0041	A	Large size footplate each					
K0042	A	Standard size footplate each					
K0043	A	Ftrst lower extension tube					
K0044	A	Ftrst upper hanger bracket					
K0045	A	Footrest complete assembly					
K0046	A	Elevat legrst low extension					
K0047	A	Elevat legrst up hangr brack					
K0048	A	Elevate legrest complete					
K0049	A	Calf pad each					
K0050	A	Ratchet assembly					
K0051	A	Cam relese assem ftrst/lgrst					

CPT codes and descriptions only are copyright American Medical Association. All Rights Reserved. Applicable FARS/DFARS Apply.
Copyright American Dental Association. All rights reserved.
*Code is new in 2001.

ADDENDUM B.—HOSPITAL OUTPATIENT DEPARTMENT (HOPD) PAYMENT STATUS BY HCPCS CODE AND RELATED INFORMATION—Continued

CPT/ HCPCS	HOPD Status Indicator	Description	APC	Relative Weight	Payment Rate	National Unadjusted Coinsurance	Minimum Unadjusted Coinsurance
K0052	A	Swingaway detach footrest					
K0053	A	Elevate footrest articulate					
K0054	A	Seat wdth 10-12/15/17/20 wc					
K0055	A	Seat dpth 15/17/18 ltwt wc					
K0056	A	Seat ht <17 or >=21 ltwt wc					
K0057	A	Seat wdth 19/20 hvy dty wc					
K0058	A	Seat dpth 17/18 power wc					
K0059	A	Plastic coated handrim each					
K0060	A	Steel handrim each					
K0061	A	Aluminum handrim each					
K0062	A	Handrim 8-10 vert/obliq proj					
K0063	A	Hndrm 12-16 vert/obliq proj					
K0064	A	Zero pressure tube flat free					
K0065	A	Spoke protectors					
K0066	A	Solid tire any size each					
K0067	A	Pneumatic tire any size each					
K0068	A	Pneumatic tire tube each					
K0069	A	Rear whl complete solid tire					
K0070	A	Rear whl compl pneum tire					
K0071	A	Front castr compl pneum tire					
K0072	A	Frnt cstr cmpl sem-pneum tir					
K0073	A	Caster pin lock each					
K0074	A	Pneumatic caster tire each					
K0075	A	Semi-pneumatic caster tire					
K0076	A	Solid caster tire each					
K0077	A	Front caster assem complete					
K0078	A	Pneumatic caster tire tube					
K0079	A	Wheel lock extension pair					
K0080	A	Anti-rollback device pair					
K0081	A	Wheel lock assembly complete					
K0082	A	22 nf deep cycl acid battery					
K0083	A	22 nf gel cell battery each					
K0084	A	Grp 24 deep cycl acid battry					
K0085	A	Group 24 gel cell battery					
K0086	A	U-1 lead acid battery each					
K0087	A	U-1 gel cell battery each					
K0088	A	Battry chrgr acid/gel cell					
K0089	A	Battery charger dual mode					
K0090	A	Rear tire power wheelchair					
K0091	A	Rear tire tube power whlchr					
K0092	A	Rear assem cmplt powr whlchr					
K0093	A	Rear zero pressure tire tube					
K0094	A	Wheel tire for power base					
K0095	A	Wheel tire tube each base					
K0096	A	Wheel assem powr base complt					
K0097	A	Wheel zero presure tire tube					
K0098	A	Drive belt power wheelchair					
K0099	A	Pwr wheelchair front caster					
K0100	A	Amputee adapter pair					
K0101	A	One-arm drive attachment					
K0102	A	Crutch and cane holder					
K0103	A	Transfer board < 25″					
K0104	A	Cylinder tank carrier					
K0105	A	Iv hanger					
K0106	A	Arm trough each					
K0107	A	Wheelchair tray					
K0108	A	W/c component-accessory NOS					
K0112	A	Trunk vest supprt innr frame					
K0113	A	Trunk vest suprt w/o inr frm					
K0114	A	Whlchr back suprt inr frame					
K0115	A	Back module orthotic system					
K0116	A	Back & seat modul orthot sys					
K0182D	A	Water distilled w/ nebulizer					
K0183	A	Nasal application device					
K0184	A	Nasal pillows/seals pair					
K0185	A	Pos airway pressure headgear					
K0186	A	Pos airway prssure chinstrap					
K0187	A	Pos airway pressure tubing					
K0188	A	Pos airway pressure filter					
K0189	A	Filter nondisposable w PAP					
K0195	A	Elevating whlchair leg rests					
K0268	A	Humidifier nonheated w PAP					
K0269D	A	Aerosol compressor cpap dev					
K0270D	A	Ultrasonic generator w nebul					

CPT codes and descriptions only are copyright American Medical Association. All Rights Reserved. Applicable FARS/DFARS Apply.
Copyright American Dental Association. All rights reserved.
*Code is new in 2001.

ADDENDUM B.—HOSPITAL OUTPATIENT DEPARTMENT (HOPD) PAYMENT STATUS BY HCPCS CODE AND RELATED INFORMATION—Continued

CPT/ HCPCS	HOPD Status Indicator	Description	APC	Relative Weight	Payment Rate	National Unadjusted Coinsurance	Minimum Unadjusted Coinsurance
K0280D	A	Extension drainage tubing					
K0281D	A	Lubricant catheter insertion					
K0283D	A	Saline solution dispenser					
K0407D	A	Urinary cath skin attachment					
K0408D	A	Urinary cath leg strap					
K0409D	A	Sterile H2O irrigation solut					
K0410D	A	Male ext cath w/adh coating					
K0411D	A	Male ext cath w/adh strip					
K0415	E	RX antiemetic drg, oral NOS					
K0416	E	Rx antiemetic drg,rectal NOS					
K0440D	A	Nasal prosthesis					
K0441D	A	Midfacial prosthesis					
K0442D	A	Orbital prosthesis					
K0443D	A	Upper facial prosthesis					
K0444D	A	Hemi-facial prosthesis					
K0445D	A	Auricular prosthesis					
K0446D	A	Partial facial prosthesis					
K0447D	A	Nasal septal prosthesis					
K0448D	A	Unspec maxillofacial prosth					
K0449D	A	Repair maxillofacial prosth					
K0450D	A	Liq adhes for facial prosth					
K0451D	A	Adhesive remover wipes					
K0452	A	Wheelchair bearings					
K0455	A	Pump uninterrupted infusion					
K0456D	A	Heavyduty/xtra wide hosp bed					
K0457D	A	Heavyduty/wide commode chair					
K0458D	A	Heavyduty walker no wheels					
K0459D	A	Heavy duty wheeled walker					
K0460	A	WC power add-on joystick					
K0461	A	WC power add-on tiller cntrl					
K0462	A	Temporary replacement eqpmnt					
K0501D	A	Aerosol compressor for svneb					
K0529D	A	Sterile H20 or nss w lv neb					
K0531	A	Heated humidifier used w pap					
K0532	A	Noninvasive assist wo backup					
K0533	A	Noninvasive assist w backup					
K0534	A	Invasive assist w backup					
K0535D	A	Gauze, impregnated hydrogel					
K0536D	A	Gauze, impregnated hydrogel					
K0537D	A	Gauze, impregnated hydrogel					
K0541	A	Speech generating device					
K0542	A	Speech generating device					
K0543	A	Speech generating device					
K0544	A	Speech generating device					
K0545	A	Speech generating software					
K0546	A	Accessory for sgd,mntng syst					
K0547	A	Accessory for sgd,not clasfd					
L0100	A	Cerv craniosten helmet mold					
L0110	A	Cerv craniostenosis hel non-					
L0120	A	Cerv flexible non-adjustable					
L0130	A	Flex thermoplastic collar mo					
L0140	A	Cervical semi-rigid adjustab					
L0150	A	Cerv semi-rig adj molded chn					
L0160	A	Cerv semi-rig wire occ/mand					
L0170	A	Cervical collar molded to pt					
L0172	A	Cerv col thermplas foam 2 pi					
L0174	A	Cerv col foam 2 piece w thor					
L0180	A	Cer post col occ/man sup adj					
L0190	A	Cerv collar supp adj cerv ba					
L0200	A	Cerv col supp adj bar & thor					
L0210	A	Thoracic rib belt					
L0220	A	Thor rib belt custom fabrica					
L0300	A	TLSO flex surgical support					
L0310	A	Tlso flexible custom fabrica					
L0315	A	Tlso flex elas rigid post pa					
L0317	A	Tlso flex hypext elas post p					
L0320	A	Tlso a-p contrl w apron frnt					
L0330	A	Tlso ant-pos-lateral control					
L0340	A	Tlso a-p-l-rotary with apron					
L0350	A	Tlso flex compress jacket cu					
L0360	A	Tlso flex compress jacket mo					
L0370	A	Tlso a-p-l-rotary hyperexten					
L0380	A	Tlso a-p-l-rot w/ pos extens					
L0390	A	Tlso a-p-l control molded					

CPT codes and descriptions only are copyright American Medical Association. All Rights Reserved. Applicable FARS/DFARS Apply.
Copyright American Dental Association. All rights reserved.
*Code is new in 2001.

ADDENDUM B.—HOSPITAL OUTPATIENT DEPARTMENT (HOPD) PAYMENT STATUS BY HCPCS CODE AND RELATED INFORMATION—Continued

CPT/ HCPCS	HOPD Status Indicator	Description	APC	Relative Weight	Payment Rate	National Unadjusted Coinsurance	Minimum Unadjusted Coinsurance
L0400	A	Tlso a-p-l w interface mater					
L0410	A	Tlso a-p-l two piece constr					
L0420	A	Tlso a-p-l 2 piece w interfa					
L0430	A	Tlso a-p-l w interface custm					
L0440	A	Tlso a-p-l overlap frnt cust					
L0500	A	Lso flex surgical support					
L0510	A	Lso flexible custom fabricat					
L0515	A	Lso flex elas w/ rig post pa					
L0520	A	Lso a-p-l control with apron					
L0530	A	Lso ant-pos control w apron					
L0540	A	Lso lumbar flexion a-p-l					
L0550	A	Lso a-p-l control molded					
L0560	A	Lso a-p-l w interface					
L0565	A	Lso a-p-l control custom					
L0600	A	Sacroiliac flex surg support					
L0610	A	Sacroiliac flexible custm fa					
L0620	A	Sacroiliac semi-rig w apron					
L0700	A	Ctlso a-p-l control molded					
L0710	A	Ctlso a-p-l control w/ inter					
L0810	A	Halo cervical into jckt vest					
L0820	A	Halo cervical into body jack					
L0830	A	Halo cerv into milwaukee typ					
L0860	A	Magnetic resonanc image comp					
L0900	A	Torso/ptosis support					
L0910	A	Torso & ptosis supp custm fa					
L0920	A	Torso/pendulous abd support					
L0930	A	Pendulous abdomen supp custm					
L0940	A	Torso/postsurgical support					
L0950	A	Post surg support custom fab					
L0960	A	Post surgical support pads					
L0970	A	Tlso corset front					
L0972	A	Lso corset front					
L0974	A	Tlso full corset					
L0976	A	Lso full corset					
L0978	A	Axillary crutch extension					
L0980	A	Peroneal straps pair					
L0982	A	Stocking supp grips set of f					
L0984	A	Protective body sock each					
L0999	A	Add to spinal orthosis NOS					
L1000	A	Ctlso milwauke initial model					
L1010	A	Ctlso axilla sling					
L1020	A	Kyphosis pad					
L1025	A	Kyphosis pad floating					
L1030	A	Lumbar bolster pad					
L1040	A	Lumbar or lumbar rib pad					
L1050	A	Sternal pad					
L1060	A	Thoracic pad					
L1070	A	Trapezius sling					
L1080	A	Outrigger					
L1085	A	Outrigger bil w/ vert extens					
L1090	A	Lumbar sling					
L1100	A	Ring flange plastic/leather					
L1110	A	Ring flange plas/leather mol					
L1120	A	Covers for upright each					
L1200	A	Furnsh initial orthosis only					
L1210	A	Lateral thoracic extension					
L1220	A	Anterior thoracic extension					
L1230	A	Milwaukee type superstructur					
L1240	A	Lumbar derotation pad					
L1250	A	Anterior asis pad					
L1260	A	Anterior thoracic derotation					
L1270	A	Abdominal pad					
L1280	A	Rib gusset (elastic) each					
L1290	A	Lateral trochanteric pad					
L1300	A	Body jacket mold to patient					
L1310	A	Post-operative body jacket					
L1499	A	Spinal orthosis NOS					
L1500	A	Thkao mobility frame					
L1510	A	Thkao standing frame					
L1520	A	Thkao swivel walker					
L1600	A	Abduct hip flex frejka w cvr					
L1610	A	Abduct hip flex frejka covr					
L1620	A	Abduct hip flex pavlik harne					
L1630	A	Abduct control hip semi-flex					

CPT codes and descriptions only are copyright American Medical Association. All Rights Reserved. Applicable FARS/DFARS Apply.
Copyright American Dental Association. All rights reserved.
*Code is new in 2001.

ADDENDUM B.—HOSPITAL OUTPATIENT DEPARTMENT (HOPD) PAYMENT STATUS BY HCPCS CODE AND RELATED INFORMATION—Continued

CPT/ HCPCS	HOPD Status Indicator	Description	APC	Relative Weight	Payment Rate	National Unadjusted Coinsurance	Minimum Unadjusted Coinsurance
L1640	A	Pelv band/spread bar thigh c					
L1650	A	HO abduction hip adjustable					
L1660	A	HO abduction static plastic					
L1680	A	Pelvic & hip control thigh c					
L1685	A	Post-op hip abduct custom fa					
L1686	A	HO post-op hip abduction					
L1690	A	Combination bilateral HO					
L1700	A	Leg perthes orth toronto typ					
L1710	A	Legg perthes orth newington					
L1720	A	Legg perthes orthosis trilat					
L1730	A	Legg perthes orth scottish r					
L1750	A	Legg perthes sling					
L1755	A	Legg perthes patten bottom t					
L1800	A	Knee orthoses elas w stays					
L1810	A	Ko elastic with joints					
L1815	A	Elastic with condylar pads					
L1820	A	Ko elas w/ condyle pads & jo					
L1825	A	Ko elastic knee cap					
L1830	A	Ko immobilizer canvas longit					
L1832	A	KO adj jnt pos rigid support					
L1834	A	Ko w/0 joint rigid molded to					
L1840	A	Ko derot ant cruciate custom					
L1843	A	KO single upright custom fit					
L1844	A	Ko w/adj jt rot cntrl molded					
L1845	A	Ko w/ adj flex/ext rotat cus					
L1846	A	Ko w adj flex/ext rotat mold					
L1847	A	KO adjustable w air chambers					
L1850	A	Ko swedish type					
L1855	A	Ko plas doub upright jnt mol					
L1858	A	Ko polycentric pneumatic pad					
L1860	A	Ko supracondylar socket mold					
L1870	A	Ko doub upright lacers molde					
L1880	A	Ko doub upright cuffs/lacers					
L1885	A	Knee upright w/resistance					
L1900	A	Afo sprng wir drsflx calf bd					
L1902	A	Afo ankle gauntlet					
L1904	A	Afo molded ankle gauntlet					
L1906	A	Afo multiligamentus ankle su					
L1910	A	Afo sing bar clasp attach sh					
L1920	A	Afo sing upright w/ adjust s					
L1930	A	Afo plastic					
L1940	A	Afo molded to patient plasti					
L1945	A	Afo molded plas rig ant tib					
L1950	A	Afo spiral molded to pt plas					
L1960	A	Afo pos solid ank plastic mo					
L1970	A	Afo plastic molded w/ankle j					
L1980	A	Afo sing solid stirrup calf					
L1990	A	Afo doub solid stirrup calf					
L2000	A	Kafo sing fre stirr thi/calf					
L2010	A	Kafo sng solid stirrup w/o j					
L2020	A	Kafo dbl solid stirrup band/					
L2030	A	Kafo dbl solid stirrup w/o j					
L2035	A	KAFO plastic pediatric size					
L2036	A	Kafo plas doub free knee mol					
L2037	A	Kafo plas sing free knee mol					
L2038	A	Kafo w/o joint multi-axis an					
L2039	A	KAFO,plstic,medlat rotat con					
L2040	A	Hkafo torsion bil rot straps					
L2050	A	Hkafo torsion cable hip pelv					
L2060	A	Hkafo torsion ball bearing j					
L2070	A	Hkafo torsion unilat rot str					
L2080	A	Hkafo unilat torsion cable					
L2090	A	Hkafo unilat torsion ball br					
L2102	A	Afo tibial fx cast plstr mol					
L2104	A	Afo tib fx cast synthetic mo					
L2106	A	Afo tib fx cast plaster mold					
L2108	A	Afo tib fx cast molded to pt					
L2112	A	Afo tibial fracture soft					
L2114	A	Afo tib fx semi-rigid					
L2116	A	Afo tibial fracture rigid					
L2122	A	Kafo fem fx cast plaster mol					
L2124	A	Kafo fem fx cast synthet mol					
L2126	A	Kafo fem fx cast thermoplas					
L2128	A	Kafo fem fx cast molded to p					

CPT codes and descriptions only are copyright American Medical Association. All Rights Reserved. Applicable FARS/DFARS Apply.
Copyright American Dental Association. All rights reserved.
*Code is new in 2001.

ADDENDUM B.—HOSPITAL OUTPATIENT DEPARTMENT (HOPD) PAYMENT STATUS BY HCPCS CODE AND RELATED INFORMATION—Continued

CPT/ HCPCS	HOPD Status Indicator	Description	APC	Relative Weight	Payment Rate	National Unadjusted Coinsurance	Minimum Unadjusted Coinsurance
L2132	A	Kafo femoral fx cast soft					
L2134	A	Kafo fem fx cast semi-rigid					
L2136	A	Kafo femoral fx cast rigid					
L2180	A	Plas shoe insert w ank joint					
L2182	A	Drop lock knee					
L2184	A	Limited motion knee joint					
L2186	A	Adj motion knee jnt lerman t					
L2188	A	Quadrilateral brim					
L2190	A	Waist belt					
L2192	A	Pelvic band & belt thigh fla					
L2200	A	Limited ankle motion ea jnt					
L2210	A	Dorsiflexion assist each joi					
L2220	A	Dorsi & plantar flex ass/res					
L2230	A	Split flat caliper stirr & p					
L2240	A	Round caliper and plate atta					
L2250	A	Foot plate molded stirrup at					
L2260	A	Reinforced solid stirrup					
L2265	A	Long tongue stirrup					
L2270	A	Varus/valgus strap padded/li					
L2275	A	Plastic mod low ext pad/line					
L2280	A	Molded inner boot					
L2300	A	Abduction bar jointed adjust					
L2310	A	Abduction bar-straight					
L2320	A	Non-molded lacer					
L2330	A	Lacer molded to patient mode					
L2335	A	Anterior swing band					
L2340	A	Pre-tibial shell molded to p					
L2350	A	Prosthetic type socket molde					
L2360	A	Extended steel shank					
L2370	A	Patten bottom					
L2375	A	Torsion ank & half solid sti					
L2380	A	Torsion straight knee joint					
L2385	A	Straight knee joint heavy du					
L2390	A	Offset knee joint each					
L2395	A	Offset knee joint heavy duty					
L2397	A	Suspension sleeve lower ext					
L2405	A	Knee joint drop lock ea jnt					
L2415	A	Knee joint cam lock each joi					
L2425	A	Knee disc/dial lock/adj flex					
L2430	A	Knee jnt ratchet lock ea jnt					
L2435	A	Knee joint polycentric joint					
L2492	A	Knee lift loop drop lock rin					
L2500	A	Thi/glut/ischia wgt bearing					
L2510	A	Th/wght bear quad-lat brim m					
L2520	A	Th/wght bear quad-lat brim c					
L2525	A	Th/wght bear nar m-l brim mo					
L2526	A	Th/wght bear nar m-l brim cu					
L2530	A	Thigh/wght bear lacer non-mo					
L2540	A	Thigh/wght bear lacer molded					
L2550	A	Thigh/wght bear high roll cu					
L2570	A	Hip clevis type 2 posit jnt					
L2580	A	Pelvic control pelvic sling					
L2600	A	Hip clevis/thrust bearing fr					
L2610	A	Hip clevis/thrust bearing lo					
L2620	A	Pelvic control hip heavy dut					
L2622	A	Hip joint adjustable flexion					
L2624	A	Hip adj flex ext abduct cont					
L2627	A	Plastic mold recipro hip & c					
L2628	A	Metal frame recipro hip & ca					
L2630	A	Pelvic control band & belt u					
L2640	A	Pelvic control band & belt b					
L2650	A	Pelv & thor control gluteal					
L2660	A	Thoracic control thoracic ba					
L2670	A	Thorac cont paraspinal uprig					
L2680	A	Thorac cont lat support upri					
L2750	A	Plating chrome/nickel pr bar					
L2755	A	Carbon graphite lamination					
L2760	A	Extension per extension per					
L2770	A	Low ext orthosis per bar/jnt					
L2780	A	Non-corrosive finish					
L2785	A	Drop lock retainer each					
L2795	A	Knee control full kneecap					
L2800	A	Knee cap medial or lateral p					
L2810	A	Knee control condylar pad					

CPT codes and descriptions only are copyright American Medical Association. All Rights Reserved. Applicable FARS/DFARS Apply.
Copyright American Dental Association. All rights reserved.
*Code is new in 2001.

ADDENDUM B.—HOSPITAL OUTPATIENT DEPARTMENT (HOPD) PAYMENT STATUS BY HCPCS CODE AND RELATED INFORMATION—Continued

CPT/ HCPCS	HOPD Status Indicator	Description	APC	Relative Weight	Payment Rate	National Unadjusted Coinsurance	Minimum Unadjusted Coinsurance
L2820	A	Soft interface below knee se					
L2830	A	Soft interface above knee se					
L2840	A	Tibial length sock fx or equ					
L2850	A	Femoral lgth sock fx or equa					
L2860	A	Torsion mechanism knee/ankle					
L2999	A	Lower extremity orthosis NOS					
L3000	E	Ft insert ucb berkeley shell					
L3001	E	Foot insert remov molded spe					
L3002	E	Foot insert plastazote or eq					
L3003	E	Foot insert silicone gel eac					
L3010	E	Foot longitudinal arch suppo					
L3020	E	Foot longitud/metatarsal sup					
L3030	E	Foot arch support remov prem					
L3040	E	Ft arch suprt premold longit					
L3050	E	Foot arch supp premold metat					
L3060	E	Foot arch supp longitud/meta					
L3070	E	Arch suprt att to sho longit					
L3080	E	Arch supp att to shoe metata					
L3090	E	Arch supp att to shoe long/m					
L3100	E	Hallus-valgus nght dynamic s					
L3140	E	Abduction rotation bar shoe					
L3150	E	Abduct rotation bar w/o shoe					
L3160	E	Shoe styled positioning dev					
L3170	E	Foot plastic heel stabilizer					
L3201	E	Oxford w supinat/pronat inf					
L3202	E	Oxford w/ supinat/pronator c					
L3203	E	Oxford w/ supinator/pronator					
L3204	E	Hightop w/ supp/pronator inf					
L3206	E	Hightop w/ supp/pronator chi					
L3207	E	Hightop w/ supp/pronator jun					
L3208	E	Surgical boot each infant					
L3209	E	Surgical boot each child					
L3211	E	Surgical boot each junior					
L3212	E	Benesch boot pair infant					
L3213	E	Benesch boot pair child					
L3214	E	Benesch boot pair junior					
L3215	E	Orthopedic ftwear ladies oxf					
L3216	E	Orthoped ladies shoes dpth i					
L3217	E	Ladies shoes hightop depth i					
L3218	E	Ladies surgical boot each					
L3219	E	Orthopedic mens shoes oxford					
L3221	E	Orthopedic mens shoes dpth i					
L3222	E	Mens shoes hightop depth inl					
L3223	E	Mens surgical boot each					
L3224	A	Woman's shoe oxford brace					
L3225	A	Man's shoe oxford brace					
L3230	E	Custom shoes depth inlay					
L3250	E	Custom mold shoe remov prost					
L3251	E	Shoe molded to pt silicone s					
L3252	E	Shoe molded plastazote cust					
L3253	E	Shoe molded plastazote cust					
L3254	E	Orth foot non-stndard size/w					
L3255	E	Orth foot non-standard size/					
L3257	E	Orth foot add charge split s					
L3260	E	Ambulatory surgical boot eac					
L3265	E	Plastazote sandal each					
L3300	E	Sho lift taper to metatarsal					
L3310	E	Shoe lift elev heel/sole neo					
L3320	E	Shoe lift elev heel/sole cor					
L3330	E	Lifts elevation metal extens					
L3332	E	Shoe lifts tapered to one-ha					
L3334	E	Shoe lifts elevation heel /i					
L3340	E	Shoe wedge sach					
L3350	E	Shoe heel wedge					
L3360	E	Shoe sole wedge outside sole					
L3370	E	Shoe sole wedge between sole					
L3380	E	Shoe clubfoot wedge					
L3390	E	Shoe outflare wedge					
L3400	E	Shoe metatarsal bar wedge ro					
L3410	E	Shoe metatarsal bar between					
L3420	E	Full sole/heel wedge btween					
L3430	E	Sho heel count plast reinfor					
L3440	E	Heel leather reinforced					
L3450	E	Shoe heel sach cushion type					

CPT codes and descriptions only are copyright American Medical Association. All Rights Reserved. Applicable FARS/DFARS Apply.
Copyright American Dental Association. All rights reserved.
*Code is new in 2001.

ADDENDUM B.—HOSPITAL OUTPATIENT DEPARTMENT (HOPD) PAYMENT STATUS BY HCPCS CODE AND RELATED INFORMATION—Continued

CPT/ HCPCS	HOPD Status Indicator	Description	APC	Relative Weight	Payment Rate	National Unadjusted Coinsurance	Minimum Unadjusted Coinsurance
L3455	E	Shoe heel new leather standa					
L3460	E	Shoe heel new rubber standar					
L3465	E	Shoe heel thomas with wedge					
L3470	E	Shoe heel thomas extend to b					
L3480	E	Shoe heel pad & depress for					
L3485	E	Shoe heel pad removable for					
L3500	E	Ortho shoe add leather insol					
L3510	E	Orthopedic shoe add rub insl					
L3520	E	O shoe add felt w leath insl					
L3530	E	Ortho shoe add half sole					
L3540	E	Ortho shoe add full sole					
L3550	E	O shoe add standard toe tap					
L3560	E	O shoe add horseshoe toe tap					
L3570	E	O shoe add instep extension					
L3580	E	O shoe add instep velcro clo					
L3590	E	O shoe convert to sof counte					
L3595	E	Ortho shoe add march bar					
L3600	E	Trans shoe calip plate exist					
L3610	E	Trans shoe caliper plate new					
L3620	E	Trans shoe solid stirrup exi					
L3630	E	Trans shoe solid stirrup new					
L3640	E	Shoe dennis browne splint bo					
L3649	E	Orthopedic shoe modifica NOS					
L3650	A	Shlder fig 8 abduct restrain					
L3660	A	Abduct restrainer canvas&web					
L3670	A	Acromio/clavicular canvas&we					
L3675	A	Canvas vest SO					
L3700	A	Elbow orthoses elas w stays					
L3710	A	Elbow elastic with metal joi					
L3720	A	Forearm/arm cuffs free motio					
L3730	A	Forearm/arm cuffs ext/flex a					
L3740	A	Cuffs adj lock w/ active con					
L3760	A	EO withjoint, Prefabricated					
L3800	A	Whfo short opponen no attach					
L3805	A	Whfo long opponens no attach					
L3807	A	Whfo w inflatable airchamber					
L3810	A	Whfo thumb abduction bar					
L3815	A	Whfo second m.p. abduction a					
L3820	A	Whfo ip ext asst w/ mp ext s					
L3825	A	Whfo m.p. extension stop					
L3830	A	Whfo m.p. extension assist					
L3835	A	Whfo m.p. spring extension a					
L3840	A	Whfo spring swivel thumb					
L3845	A	Whfo thumb ip ext ass w/ mp					
L3850	A	Action wrist w/ dorsiflex as					
L3855	A	Whfo adj m.p. flexion contro					
L3860	A	Whfo adj m.p. flex ctrl & i.					
L3890	E	Torsion mechanism wrist/elbo					
L3900	A	Hinge extension/flex wrist/f					
L3901	A	Hinge ext/flex wrist finger					
L3902	A	Whfo ext power compress gas					
L3904	A	Whfo electric custom fitted					
L3906	A	Wrist gauntlet molded to pt					
L3907	A	Whfo wrst gauntlt thmb spica					
L3908	A	Wrist cock-up non-molded					
L3910	A	Whfo swanson design					
L3912	A	Flex glove w/elastic finger					
L3914	A	WHO wrist extension cock-up					
L3916	A	Whfo wrist extens w/ outrigg					
L3918	A	HFO knuckle bender					
L3920	A	Knuckle bender with outrigge					
L3922	A	Knuckle bend 2 seg to flex j					
L3923	A	HFO, no joint, prefabricated					
L3924	A	Oppenheimer					
L3926	A	Thomas suspension					
L3928	A	Finger extension w/ clock sp					
L3930	A	Finger extension with wrist					
L3932	A	Safety pin spring wire					
L3934	A	Safety pin modified					
L3936	A	Palmer					
L3938	A	Dorsal wrist					
L3940	A	Dorsal wrist w/ outrigger at					
L3942	A	Reverse knuckle bender					
L3944	A	Reverse knuckle bend w/ outr					

CPT codes and descriptions only are copyright American Medical Association. All Rights Reserved. Applicable FARS/DFARS Apply.
Copyright American Dental Association. All rights reserved.
*Code is new in 2001.

ADDENDUM B.—HOSPITAL OUTPATIENT DEPARTMENT (HOPD) PAYMENT STATUS BY HCPCS CODE AND RELATED INFORMATION—Continued

CPT/ HCPCS	HOPD Status Indicator	Description	APC	Relative Weight	Payment Rate	National Unadjusted Coinsurance	Minimum Unadjusted Coinsurance
L3946	A	HFO composite elastic					
L3948	A	Finger knuckle bender					
L3950	A	Oppenheimer w/ knuckle bend					
L3952	A	Oppenheimer w/ rev knuckle 2					
L3954	A	Spreading hand					
L3956	A	Add joint upper ext orthosis					
L3960	A	Sewho airplan desig abdu pos					
L3962	A	Sewho erbs palsey design abd					
L3963	A	Molded w/ articulating elbow					
L3964	A	Seo mobile arm sup att to wc					
L3965	A	Arm supp att to wc rancho ty					
L3966	A	Mobile arm supports reclinin					
L3968	A	Friction dampening arm supp					
L3969	A	Monosuspension arm/hand supp					
L3970	A	Elevat proximal arm support					
L3972	A	Offset/lat rocker arm w/ ela					
L3974	A	Mobile arm support supinator					
L3980	A	Upp ext fx orthosis humeral					
L3982	A	Upper ext fx orthosis rad/ul					
L3984	A	Upper ext fx orthosis wrist					
L3985	A	Forearm hand fx orth w/ wr h					
L3986	A	Humeral rad/ulna wrist fx or					
L3995	A	Sock fracture or equal each					
L3999	A	Upper limb orthosis NOS					
L4000	A	Repl girdle milwaukee orth					
L4010	A	Replace trilateral socket br					
L4020	A	Replace quadlat socket brim					
L4030	A	Replace socket brim cust fit					
L4040	A	Replace molded thigh lacer					
L4045	A	Replace non-molded thigh lac					
L4050	A	Replace molded calf lacer					
L4055	A	Replace non-molded calf lace					
L4060	A	Replace high roll cuff					
L4070	A	Replace prox & dist upright					
L4080	A	Repl met band kafo-afo prox					
L4090	A	Repl met band kafo-afo calf/					
L4100	A	Repl leath cuff kafo prox th					
L4110	A	Repl leath cuff kafo-afo cal					
L4130	A	Replace pretibial shell					
L4205	A	Ortho dvc repair per 15 min					
L4210	A	Orth dev repair/repl minor p					
L4350	A	Pneumatic ankle cntrl splint					
L4360	A	Pneumatic walking splint					
L4370	A	Pneumatic full leg splint					
L4380	A	Pneumatic knee splint					
L4392	A	Replace AFO soft interface					
L4394	A	Replace foot drop spint					
L4396	A	Static AFO					
L4398	A	Foot drop splint recumbent					
L5000	A	Sho insert w arch toe filler					
L5010	A	Mold socket ank hgt w/ toe f					
L5020	A	Tibial tubercle hgt w/ toe f					
L5050	A	Ank symes mold sckt sach ft					
L5060	A	Symes met fr leath socket ar					
L5100	A	Molded socket shin sach foot					
L5105	A	Plast socket jts/thgh lacer					
L5150	A	Mold sckt ext knee shin sach					
L5160	A	Mold socket bent knee shin s					
L5200	A	Kne sing axis fric shin sach					
L5210	A	No knee/ankle joints w/ ft b					
L5220	A	No knee joint with artic ali					
L5230	A	Fem focal defic constant fri					
L5250	A	Hip canad sing axi cons fric					
L5270	A	Tilt table locking hip sing					
L5280	A	Hemipelvect canad sing axis					
L5300	A	Bk sach soft cover & finish					
L5310	A	Knee disart sach soft cv/fin					
L5320	A	Ak open end sach soft cv/fin					
L5330	A	Hip canadian sach sft cv/fin					
L5340	A	Hemipelvectomy canad cv/fin					
L5400	A	Postop dress & 1 cast chg bk					
L5410	A	Postop dsg bk ea add cast ch					
L5420	A	Postop dsg & 1 cast chg ak/d					
L5430	A	Postop dsg ak ea add cast ch					

CPT codes and descriptions only are copyright American Medical Association. All Rights Reserved. Applicable FARS/DFARS Apply.
Copyright American Dental Association. All rights reserved.
*Code is new in 2001.

ADDENDUM B.—HOSPITAL OUTPATIENT DEPARTMENT (HOPD) PAYMENT STATUS BY HCPCS CODE AND RELATED INFORMATION—Continued

CPT/ HCPCS	HOPD Status Indicator	Description	APC	Relative Weight	Payment Rate	National Unadjusted Coinsurance	Minimum Unadjusted Coinsurance
L5450	A	Postop app non-wgt bear dsg					
L5460	A	Postop app non-wgt bear dsg					
L5500	A	Init bk ptb plaster direct					
L5505	A	Init ak ischal plstr direct					
L5510	A	Prep BK ptb plaster molded					
L5520	A	Perp BK ptb thermopls direct					
L5530	A	Prep BK ptb thermopls molded					
L5535	A	Prep BK ptb open end socket					
L5540	A	Prep BK ptb laminated socket					
L5560	A	Prep AK ischial plast molded					
L5570	A	Prep AK ischial direct form					
L5580	A	Prep AK ischial thermo mold					
L5585	A	Prep AK ischial open end					
L5590	A	Prep AK ischial laminated					
L5595	A	Hip disartic sach thermopls					
L5600	A	Hip disart sach laminat mold					
L5610	A	Above knee hydracadence					
L5611	A	Ak 4 bar link w/fric swing					
L5613	A	Ak 4 bar ling w/hydraul swig					
L5614	A	4-bar link above knee w/swng					
L5616	A	Ak univ multiplex sys frict					
L5617	A	AK/BK self-aligning unit ea					
L5618	A	Test socket symes					
L5620	A	Test socket below knee					
L5622	A	Test socket knee disarticula					
L5624	A	Test socket above knee					
L5626	A	Test socket hip disarticulat					
L5628	A	Test socket hemipelvectomy					
L5629	A	Below knee acrylic socket					
L5630	A	Syme typ expandabl wall sckt					
L5631	A	Ak/knee disartic acrylic soc					
L5632	A	Symes type ptb brim design s					
L5634	A	Symes type poster opening so					
L5636	A	Symes type medial opening so					
L5637	A	Below knee total contact					
L5638	A	Below knee leather socket					
L5639	A	Below knee wood socket					
L5640	A	Knee disarticulat leather so					
L5642	A	Above knee leather socket					
L5643	A	Hip flex inner socket ext fr					
L5644	A	Above knee wood socket					
L5645	A	Ak flexibl inner socket ext					
L5646	A	Below knee air cushion socke					
L5647	A	Below knee suction socket					
L5648	A	Above knee air cushion socke					
L5649	A	Isch containmt/narrow m-l so					
L5650	A	Tot contact ak/knee disart s					
L5651	A	Ak flex inner socket ext fra					
L5652	A	Suction susp ak/knee disart					
L5653	A	Knee disart expand wall sock					
L5654	A	Socket insert symes					
L5655	A	Socket insert below knee					
L5656	A	Socket insert knee articulat					
L5658	A	Socket insert above knee					
L5660	A	Sock insrt syme silicone gel					
L5661	A	Multi-durometer symes					
L5662	A	Socket insert bk silicone ge					
L5663	A	Sock knee disartic silicone					
L5664	A	Socket insert ak silicone ge					
L5665	A	Multi-durometer below knee					
L5666	A	Below knee cuff suspension					
L5667	A	Socket insert w lock lower					
L5668	A	Socket insert w/o lock lower					
L5669	A	Below knee socket w/o lock					
L5670	A	Bk molded supracondylar susp					
L5672	A	Bk removable medial brim sus					
L5674	A	Bk latex sleeve suspension/e					
L5675	A	Bk latex sleeve susp/eq hvy					
L5676	A	Bk knee joints single axis p					
L5677	A	Bk knee joints polycentric p					
L5678	A	Bk joint covers pair					
L5680	A	Bk thigh lacer non-molded					
L5682	A	Bk thigh lacer glut/ischia m					
L5684	A	Bk fork strap					

CPT codes and descriptions only are copyright American Medical Association. All Rights Reserved. Applicable FARS/DFARS Apply.
Copyright American Dental Association. All rights reserved.
*Code is new in 2001.

ADDENDUM B.—HOSPITAL OUTPATIENT DEPARTMENT (HOPD) PAYMENT STATUS BY HCPCS CODE AND RELATED INFORMATION—Continued

CPT/ HCPCS	HOPD Status Indicator	Description	APC	Relative Weight	Payment Rate	National Unadjusted Coinsurance	Minimum Unadjusted Coinsurance
L5686	A	Bk back check					
L5688	A	Bk waist belt webbing					
L5690	A	Bk waist belt padded and lin					
L5692	A	Ak pelvic control belt light					
L5694	A	Ak pelvic control belt pad/l					
L5695	A	Ak sleeve susp neoprene/equa					
L5696	A	Ak/knee disartic pelvic join					
L5697	A	Ak/knee disartic pelvic band					
L5698	A	Ak/knee disartic silesian ba					
L5699	A	Shoulder harness					
L5700	A	Replace socket below knee					
L5701	A	Replace socket above knee					
L5702	A	Replace socket hip					
L5704	A	Custom shape covr below knee					
L5705	A	Custm shape cover above knee					
L5706	A	Custm shape cvr knee disart					
L5707	A	Custm shape cover hip disart					
L5710	A	Kne-shin exo sng axi mnl loc					
L5711	A	Knee-shin exo mnl lock ultra					
L5712	A	Knee-shin exo frict swg & st					
L5714	A	Knee-shin exo variable frict					
L5716	A	Knee-shin exo mech stance ph					
L5718	A	Knee-shin exo frct swg & sta					
L5722	A	Knee-shin pneum swg frct exo					
L5724	A	Knee-shin exo fluid swing ph					
L5726	A	Knee-shin ext jnts fld swg e					
L5728	A	Knee-shin fluid swg & stance					
L5780	A	Knee-shin pneum/hydra pneum					
L5785	A	Exoskeletal bk ultralt mater					
L5790	A	Exoskeletal ak ultra-light m					
L5795	A	Exoskel hip ultra-light mate					
L5810	A	Endoskel knee-shin mnl lock					
L5811	A	Endo knee-shin mnl lck ultra					
L5812	A	Endo knee-shin frct swg & st					
L5814	A	Endo knee-shin hydral swg ph					
L5816	A	Endo knee-shin polyc mch sta					
L5818	A	Endo knee-shin frct swg & st					
L5822	A	Endo knee-shin pneum swg frc					
L5824	A	Endo knee-shin fluid swing p					
L5826	A	Miniature knee joint					
L5828	A	Endo knee-shin fluid swg/sta					
L5830	A	Endo knee-shin pneum/swg pha					
L5840	A	Multi-axial knee/shin system					
L5845	A	Knee-shin sys stance flexion					
L5846	A	Knee-shin sys microprocessor					
L5850	A	Endo ak/hip knee extens assi					
L5855	A	Mech hip extension assist					
L5910	A	Endo below knee alignable sy					
L5920	A	Endo ak/hip alignable system					
L5925	A	Above knee manual lock					
L5930	A	High activity knee frame					
L5940	A	Endo bk ultra-light material					
L5950	A	Endo ak ultra-light material					
L5960	A	Endo hip ultra-light materia					
L5962	A	Below knee flex cover system					
L5964	A	Above knee flex cover system					
L5966	A	Hip flexible cover system					
L5968	A	Multiaxial ankle w dorsiflex					
L5970	A	Foot external keel sach foot					
L5972	A	Flexible keel foot					
L5974	A	Foot single axis ankle/foot					
L5975	A	Combo ankle/foot prosthesis					
L5976	A	Energy storing foot					
L5978	A	Ft prosth multiaxial ankl/ft					
L5979	A	Multi-axial ankle/ft prosth					
L5980	A	Flex foot system					
L5981	A	Flex-walk sys low ext prosth					
L5982	A	Exoskeletal axial rotation u					
L5984	A	Endoskeletal axial rotation					
L5985	A	Lwr ext dynamic prosth pylon					
L5986	A	Multi-axial rotation unit					
L5987	A	Shank ft w vert load pylon					
L5988	A	Vertical shock reducing pylo					
L5999	A	Lowr extremity prosthes NOS					

CPT codes and descriptions only are copyright American Medical Association. All Rights Reserved. Applicable FARS/DFARS Apply.
Copyright American Dental Association. All rights reserved.
*Code is new in 2001.

ADDENDUM B.—HOSPITAL OUTPATIENT DEPARTMENT (HOPD) PAYMENT STATUS BY HCPCS CODE AND RELATED INFORMATION—Continued

CPT/ HCPCS	HOPD Status Indicator	Description	APC	Relative Weight	Payment Rate	National Unadjusted Coinsurance	Minimum Unadjusted Coinsurance
L6000	A	Par hand robin-aids thum rem					
L6010	A	Hand robin-aids little/ring					
L6020	A	Part hand robin-aids no fing					
L6050	A	Wrst MLd sck flx hng tri pad					
L6055	A	Wrst mold sock w/exp interfa					
L6100	A	Elb mold sock flex hinge pad					
L6110	A	Elbow mold sock suspension t					
L6120	A	Elbow mold doub splt soc ste					
L6130	A	Elbow stump activated lock h					
L6200	A	Elbow mold outsid lock hinge					
L6205	A	Elbow molded w/ expand inter					
L6250	A	Elbow inter loc elbow forarm					
L6300	A	Shlder disart int lock elbow					
L6310	A	Shoulder passive restor comp					
L6320	A	Shoulder passive restor cap					
L6350	A	Thoracic intern lock elbow					
L6360	A	Thoracic passive restor comp					
L6370	A	Thoracic passive restor cap					
L6380	A	Postop dsg cast chg wrst/elb					
L6382	A	Postop dsg cast chg elb dis/					
L6384	A	Postop dsg cast chg shlder/t					
L6386	A	Postop ea cast chg & realign					
L6388	A	Postop applicat rigid dsg on					
L6400	A	Below elbow prosth tiss shap					
L6450	A	Elb disart prosth tiss shap					
L6500	A	Above elbow prosth tiss shap					
L6550	A	Shldr disar prosth tiss shap					
L6570	A	Scap thorac prosth tiss shap					
L6580	A	Wrist/elbow bowden cable mol					
L6582	A	Wrist/elbow bowden cbl dir f					
L6584	A	Elbow fair lead cable molded					
L6586	A	Elbow fair lead cable dir fo					
L6588	A	Shdr fair lead cable molded					
L6590	A	Shdr fair lead cable direct					
L6600	A	Polycentric hinge pair					
L6605	A	Single pivot hinge pair					
L6610	A	Flexible metal hinge pair					
L6615	A	Disconnect locking wrist uni					
L6616	A	Disconnect insert locking wr					
L6620	A	Flexion-friction wrist unit					
L6623	A	Spring-ass rot wrst w/ latch					
L6625	A	Rotation wrst w/ cable lock					
L6628	A	Quick disconn hook adapter o					
L6629	A	Lamination collar w/ couplin					
L6630	A	Stainless steel any wrist					
L6632	A	Latex suspension sleeve each					
L6635	A	Lift assist for elbow					
L6637	A	Nudge control elbow lock					
L6640	A	Shoulder abduction joint pai					
L6641	A	Excursion amplifier pulley t					
L6642	A	Excursion amplifier lever ty					
L6645	A	Shoulder flexion-abduction j					
L6650	A	Shoulder universal joint					
L6655	A	Standard control cable extra					
L6660	A	Heavy duty control cable					
L6665	A	Teflon or equal cable lining					
L6670	A	Hook to hand cable adapter					
L6672	A	Harness chest/shlder saddle					
L6675	A	Harness figure of 8 sing con					
L6676	A	Harness figure of 8 dual con					
L6680	A	Test sock wrist disart/bel e					
L6682	A	Test sock elbw disart/above					
L6684	A	Test socket shldr disart/tho					
L6686	A	Suction socket					
L6687	A	Frame typ socket bel elbow/w					
L6688	A	Frame typ sock above elb/dis					
L6689	A	Frame typ socket shoulder di					
L6690	A	Frame typ sock interscap-tho					
L6691	A	Removable insert each					
L6692	A	Silicone gel insert or equal					
L6693	A	Lockingelbow forearm cntrbal					
L6700	A	Terminal device model #3					
L6705	A	Terminal device model #5					
L6710	A	Terminal device model #5x					

CPT codes and descriptions only are copyright American Medical Association. All Rights Reserved. Applicable FARS/DFARS Apply.
Copyright American Dental Association. All rights reserved.
*Code is new in 2001.

ADDENDUM B.—HOSPITAL OUTPATIENT DEPARTMENT (HOPD) PAYMENT STATUS BY HCPCS CODE AND RELATED INFORMATION—Continued

CPT/ HCPCS	HOPD Status Indicator	Description	APC	Relative Weight	Payment Rate	National Unadjusted Coinsurance	Minimum Unadjusted Coinsurance
L6715	A	Terminal device model #5xa					
L6720	A	Terminal device model #6					
L6725	A	Terminal device model #7					
L6730	A	Terminal device model #7lo					
L6735	A	Terminal device model #8					
L6740	A	Terminal device model #8x					
L6745	A	Terminal device model #88x					
L6750	A	Terminal device model #10p					
L6755	A	Terminal device model #10x					
L6765	A	Terminal device model #12p					
L6770	A	Terminal device model #99x					
L6775	A	Terminal device model #555					
L6780	A	Terminal device model #ss555					
L6790	A	Hooks-accu hook or equal					
L6795	A	Hooks-2 load or equal					
L6800	A	Hooks-aprl vc or equal					
L6805	A	Modifier wrist flexion unit					
L6806	A	Trs grip vc or equal					
L6807	A	Term device grip1/2 or equal					
L6808	A	Term device infant or child					
L6809	A	Trs super sport passive					
L6810	A	Pincher tool otto bock or eq					
L6825	A	Hands dorrance vo					
L6830	A	Hand aprl vc					
L6835	A	Hand sierra vo					
L6840	A	Hand becker imperial					
L6845	A	Hand becker lock grip					
L6850	A	Term dvc-hand becker plylite					
L6855	A	Hand robin-aids vo					
L6860	A	Hand robin-aids vo soft					
L6865	A	Hand passive hand					
L6867	A	Hand detroit infant hand					
L6868	A	Passive inf hand steeper/hos					
L6870	A	Hand child mitt					
L6872	A	Hand nyu child hand					
L6873	A	Hand mech inf steeper or equ					
L6875	A	Hand bock vc					
L6880	A	Hand bock vo					
L6890	A	Production glove					
L6895	A	Custom glove					
L6900	A	Hand restorat thumb/1 finger					
L6905	A	Hand restoration multiple fi					
L6910	A	Hand restoration no fingers					
L6915	A	Hand restoration replacmnt g					
L6920	A	Wrist disarticul switch ctrl					
L6925	A	Wrist disart myoelectronic c					
L6930	A	Below elbow switch control					
L6935	A	Below elbow myoelectronic ct					
L6940	A	Elbow disarticulation switch					
L6945	A	Elbow disart myoelectronic c					
L6950	A	Above elbow switch control					
L6955	A	Above elbow myoelectronic ct					
L6960	A	Shldr disartic switch contro					
L6965	A	Shldr disartic myoelectronic					
L6970	A	Interscapular-thor switch ct					
L6975	A	Interscap-thor myoelectronic					
L7010	A	Hand otto back steeper/eq sw					
L7015	A	Hand sys teknik village swit					
L7020	A	Electronic greifer switch ct					
L7025	A	Electron hand myoelectronic					
L7030	A	Hand sys teknik vill myoelec					
L7035	A	Electron greifer myoelectro					
L7040	A	Prehensile actuator hosmer s					
L7045	A	Electron hook child michigan					
L7170	A	Electronic elbow hosmer swit					
L7180	A	Electronic elbow utah myoele					
L7185	A	Electron elbow adolescent sw					
L7186	A	Electron elbow child switch					
L7190	A	Elbow adolescent myoelectron					
L7191	A	Elbow child myoelectronic ct					
L7260	A	Electron wrist rotator otto					
L7261	A	Electron wrist rotator utah					
L7266	A	Servo control steeper or equ					
L7272	A	Analogue control unb or equa					

CPT codes and descriptions only are copyright American Medical Association. All Rights Reserved. Applicable FARS/DFARS Apply.
Copyright American Dental Association. All rights reserved.
*Code is new in 2001.

ADDENDUM B.—HOSPITAL OUTPATIENT DEPARTMENT (HOPD) PAYMENT STATUS BY HCPCS CODE AND RELATED INFORMATION—Continued

CPT/ HCPCS	HOPD Status Indicator	Description	APC	Relative Weight	Payment Rate	National Unadjusted Coinsurance	Minimum Unadjusted Coinsurance
L7274	A	Proportional ctl 12 volt uta					
L7360	A	Six volt bat otto bock/eq ea					
L7362	A	Battery chrgr six volt otto					
L7364	A	Twelve volt battery utah/equ					
L7366	A	Battery chrgr 12 volt utah/e					
L7499	A	Upper extremity prosthes NOS					
L7500	A	Prosthetic dvc repair hourly					
L7510	A	Prosthetic device repair rep					
L7520	A	Repair prosthesis per 15 min					
L7900	A	Vacuum erection system					
L8000	A	Mastectomy bra					
L8010	A	Mastectomy sleeve					
L8015	A	Ext breastprosthesis garment					
L8020	A	Mastectomy form					
L8030	A	Breast prosthesis silicone/e					
L8035	A	Custom breast prosthesis					
L8039	A	Breast prosthesis NOS					
L8040	A	Nasal prosthesis					
L8041	A	Midfacial prosthesis					
L8042	A	Orbital prosthesis					
L8043	A	Upper facial prosthesis					
L8044	A	Hemi-facial prosthesis					
L8045	A	Auricular prosthesis					
L8046	A	Partial facial prosthesis					
L8047	A	Nasal septal prosthesis					
L8048	A	Unspec maxillofacial prosth					
L8049	A	Repair maxillofacial prosth					
L8100	E	Compression stocking BK18-30					
L8110	E	Compression stocking BK30-40					
L8120	E	Compression stocking BK40-50					
L8130	E	Gc stocking thighlngth 18-30					
L8140	E	Gc stocking thighlngth 30-40					
L8150	E	Gc stocking thighlngth 40-50					
L8160	E	Gc stocking full lngth 18-30					
L8170	E	Gc stocking full lngth 30-40					
L8180	E	Gc stocking full lngth 40-50					
L8190	E	Gc stocking waistlngth 18-30					
L8195	E	Gc stocking waistlngth 30-40					
L8200	E	Gc stocking waistlngth 40-50					
L8210	E	Gc stocking custom made					
L8220	E	Gc stocking lymphedema					
L8230	E	Gc stocking garter belt					
L8239	E	G compression stocking NOS					
L8300	A	Truss single w/ standard pad					
L8310	A	Truss double w/ standard pad					
L8320	A	Truss addition to std pad wa					
L8330	A	Truss add to std pad scrotal					
L8400	A	Sheath below knee					
L8410	A	Sheath above knee					
L8415	A	Sheath upper limb					
L8417	A	Pros sheath/sock w gel cushn					
L8420	A	Prosthetic sock multi ply BK					
L8430	A	Prosthetic sock multi ply AK					
L8435	A	Pros sock multi ply upper lm					
L8440	A	Shrinker below knee					
L8460	A	Shrinker above knee					
L8465	A	Shrinker upper limb					
L8470	A	Pros sock single ply BK					
L8480	A	Pros sock single ply AK					
L8485	A	Pros sock single ply upper l					
L8490	A	Air seal suction reten systm					
L8499	A	Unlisted misc prosthetic ser					
L8500	A	Artificial larynx					
L8501	A	Tracheostomy speaking valve					
L8600	N	Implant breast silicone/eq					
L8603	N	Collagen imp urinary 2.5 CC					
L8606	N	Synthetic implnt urinary 1ml					
L8610	N	Ocular implant					
L8612	N	Aqueous shunt prosthesis					
L8613	N	Ossicular implant					
*L8614	H	Cochlear device/system	1002				
L8619	A	Replace cochlear processor					
L8630	N	Metacarpophalangeal implant					
L8641	N	Metatarsal joint implant					

CPT codes and descriptions only are copyright American Medical Association. All Rights Reserved. Applicable FARS/DFARS Apply.
Copyright American Dental Association. All rights reserved.
*Code is new in 2001.

ADDENDUM B.—HOSPITAL OUTPATIENT DEPARTMENT (HOPD) PAYMENT STATUS BY HCPCS CODE AND RELATED INFORMATION—Continued

CPT/ HCPCS	HOPD Status Indicator	Description	APC	Relative Weight	Payment Rate	National Unadjusted Coinsurance	Minimum Unadjusted Coinsurance
L8642	N	Hallux implant					
L8658	N	Interphalangeal joint implnt					
L8670	N	Vascular graft, synthetic					
L8699	N	Prosthetic implant NOS					
L9900	A	O&P supply/accessory/service					
M0064	X	Visit for drug monitoring	0374	1.17	$58.03	$13.08	$11.61
M0075	E	Cellular therapy					
M0076	E	Prolotherapy					
M0100	E	Intragastric hypothermia					
M0300	E	IV chelationtherapy					
M0301	E	Fabric wrapping of aneurysm					
M0302	T	Assessment of cardiac output	0970	0.52	$25.79		$5.16
P2028	A	Cephalin floculation test					
P2029	A	Congo red blood test					
P2031	E	Hair analysis					
P2033	A	Blood thymol turbidity					
P2038	A	Blood mucoprotein					
P3000	A	Screen pap by tech w md supv					
P3001	E	Screening pap smear by phys					
P7001	E	Culture bacterial urine					
P9010	K	Whole blood for transfusion	0950	2.08	$103.33		$20.67
P9011	E	Blood split unit					
P9012	K	Cryoprecipitate each unit	0952	0.70	$34.70		$6.94
P9013D	K	Unit/s blood fibrinogen	0953	0.48	$23.80		$4.76
P9016	K	Leukocyte poor blood, unit	0954	2.83	$140.35		$28.07
P9017	K	One donor fresh frozn plasma	0955	2.26	$111.85		$22.37
P9018D	K	Plasma protein fract, unit	0956	1.26	$62.49		$12.50
P9019	K	Platelet concentrate unit	0957	0.98	$48.55		$9.71
P9020	K	Plaelet rich plasma unit	0958	1.16	$57.54		$11.51
P9021	K	Red blood cells unit	0959	2.04	$101.31		$20.26
P9022	K	Washed red blood cells unit	0960	3.81	$188.75		$37.75
P9023	K	Frozen plasma, pooled, sd	0949	2.94	$145.76		$29.15
P9031	K	Platelets leukocytes reduced	0954	2.83	$140.35		$28.07
P9032	K	Platelets, irradiated	9500	1.77	$87.97		$17.59
P9033	K	Platelets leukoreduced irrad	0954	2.83	$140.35		$28.07
P9034	K	Platelets, pheresis	9501	9.69	$480.75		$96.15
P9035	K	Platelet pheres leukoreduced	9501	9.69	$480.75		$96.15
P9036	K	Platelet pheresis irradiated	9502	10.52	$521.66		$104.33
P9037	K	Plate pheres leukoredu irrad	9501	9.69	$480.75		$96.15
P9038	K	RBC irradiated	9505	2.58	$127.86		$25.57
P9039	K	RBC deglycerolized	9504	4.35	$215.83		$43.17
P9040	K	RBC leukoreduced irradiated	9504	4.35	$215.83		$43.17
P9041	K	Albumin(human), 5%, 500 ML	0961	2.77	$137.38		$27.48
P9042	K	Albumin (human), 25%, 50 ML	0962	1.38	$68.44		$13.69
P9043	K	Plasma protein fraction	0956	1.26	$62.49		$12.50
P9044	K	Cryoprecipitate reduced plasma	1009	0.86	$42.76		$8.55
P9603	A	One-way allow prorated miles					
P9604	A	One-way allow prorated trip					
P9612	N	Catheterize for urine spec					
P9615	N	Urine specimen collect mult					
Q0034D	K	Admin of influenza vaccine	0354	0.13	$6.33		
Q0035	X	Cardiokymography	0100	1.70	$84.32	$71.57	$16.86
Q0081	T	Infusion ther other than che	0120	1.66	$82.33	$42.67	$16.47
Q0082D	P	Activity therapy w/partial h	0033	4.17	$206.82	$48.17	$41.36
Q0083	S	Chemo by other than infusion	0116	2.34	$116.06	$23.21	$23.21
Q0084	S	Chemotherapy by infusion	0117	1.84	$91.26	$71.80	$18.25
Q0085	S	Chemo by both infusion and o	0118	2.90	$143.83	$72.03	$28.77
Q0086	A	Physical therapy evaluation/					
Q0091	T	Obtaining screen pap smear	0191	1.19	$59.02	$17.43	$11.80
Q0092	N	Set up port xray equipment					
Q0111	A	Wet mounts/ w preparations					
Q0112	A	Potassium hydroxide preps					
Q0113	A	Pinworm examinations					
Q0114	A	Fern test					
Q0115	A	Post-coital mucous exam					
Q0136	G	Non esrd epoetin alpha inj	0733		$11.40		$1.53
Q0144	E	Azithromycin dihydrate, oral					
Q0156D	K	Human albumin 5%	0961	2.77	$137.38		$27.48
Q0157D	K	Human albumin 25%	0962	1.38	$68.44		$13.69
Q0160	G	Factor IX non-recombinant	0931		$.72		$.10
Q0161	G	Factor IX recombinant	0932		$1.12		$.10
Q0163	G	Diphenhydramine HCl 50mg	1400		$1.18		$.16
Q0164	G	Prochlorperazine maleate 5mg	1401		$1.31		$.18
Q0165	E	Prochlorperazine maleate10mg					

CPT codes and descriptions only are copyright American Medical Association. All Rights Reserved. Applicable FARS/DFARS Apply.
Copyright American Dental Association. All rights reserved.
*Code is new in 2001.

ADDENDUM B.—HOSPITAL OUTPATIENT DEPARTMENT (HOPD) PAYMENT STATUS BY HCPCS CODE AND RELATED INFORMATION—Continued

CPT/ HCPCS	HOPD Status Indicator	Description	APC	Relative Weight	Payment Rate	National Unadjusted Coinsurance	Minimum Unadjusted Coinsurance
Q0166	G	Granisetron HCl 1 mg oral	0765		$44.70		$5.99
Q0167	G	Dronabinol 2.5mg oral	0762		$3.20		$.48
Q0168	E	Dronabinol 5mg oral					
Q0169	G	Promethazine HCl 12.5mg oral	1402		$.03		
Q0170	E	Promethazine HCl 25 mg oral					
Q0171	G	Chlorpromazine HCl 10mg oral	1403		$.55		$.07
Q0172	E	Chlorpromazine HCl 25mg oral					
Q0173	G	Trimethobenzamide HCl 250mg	1404		$.36		$.05
Q0174	G	Thiethylperazine maleate10mg	1405		$.69		$.09
Q0175	G	Perphenazine 4mg oral	1406		$.71		$.10
Q0176	E	Perphenazine 8mg oral					
Q0177	G	Hydroxyzine pamoate 25mg	1407		$.20		$.03
Q0178	E	Hydroxyzine pamoate 50mg					
Q0179	G	Ondansetron HCl 8mg oral	0769		$25.15		$3.37
Q0180	G	Dolasetron mesylate oral	0763		$65.21		$8.74
Q0181	G	Unspecified oral anti-emetic	0761		$.60		$.08
Q0183	N	Nonmetabolic active tissue					
Q0184	N	Metabolically active tissue					
Q0185	N	Metabolic active D/E tissue					
Q0186D	E	Paramedic intercept, rural					
Q0187	G	Factor viia recombinant	1409		$1,596.00		$213.86
Q0188D	N	Contrast medium					
Q1001	E	Ntiol category 1					
Q1002	E	Ntiol category 2					
Q1003	E	Ntiol category 3					
Q1004	E	Ntiol category 4					
Q1005	E	Ntiol category 5					
Q2001	N	Cabergoline, 0.5 mg, oral					
Q2002	G	Elliot's B solution, per ml	7022		$14.25		$1.91
Q2003	G	Aprotinin, 10,000 kiu	7019		$196.35		$26.31
Q2004	G	Treatment for bladder calculi, per 500 ml	7023		$23.54		$3.15
Q2005	G	Corticorelin ovine triflutate, per 0.1 mg	7024		$353.88		$45.77
Q2006	G	Digoxin immune FAB (Ovine), 40 mg vial	7025		$530.44		$64.71
Q2007	G	Ethanolamine oleate, 100 mg	7026		$27.21		$3.65
Q2008	G	Fomepizole, 1.5 mg	7027		$728.33		$97.60
Q2009	G	Fosphenytoin, 50 mg	7028		$8.55		$1.15
Q2010	G	Glatiramer acetate, 20 mg	7029		$27.40		$3.67
Q2011	G	Hemin, 1 mg	7030		$.90		$.12
Q2012	G	Pegademase bovine inj 25 I.U	7039		$139.33		$18.67
Q2013	G	Pentastarch 10% inj, 100 ml	7040		$15.11		$2.04
Q2014	G	Sermorelin acetate, 0.5 mg	7032		$15.78		$2.11
Q2015	G	Somatrem, 5 mg	7033		$199.50		$26.73
Q2016	G	Somatropin, 1 mg (any derivation)	7034		$39.90		$5.35
Q2017	G	Teniposide, 50 mg	7035		$195.28		$26.17
Q2018	G	Urofollitropin, 75 I.U.	7037		$69.73		$9.34
*Q2019	G	Basiliximab, 20 mg	1615		$1,250.01		$167.50
*Q2020	G	Histrelin Acetate, 0.5 mg	1616		$14.91		$2.00
*Q2021	G	Lepirdin, 50 mg	1617		$124.49		$16.68
*Q2022	G	Von Willebrand factor, per iu	1618		$.95		$.13
Q3001	H	Brachytherapy Seeds	0918				
*Q3002	G	Ga 67, per mCi	1619		$25.97		$3.17
*Q3003	G	TC 99M Bicisate, per vial	1620		$417.53		$55.95
*Q3004	G	Xe 133, per mCi	1621		$28.50		$3.66
*Q3005	G	TC 99M Mertiatide, per vial	1622		$185.82		$24.90
*Q3006	G	TC 99M Gluceptate	1623		$22.61		$2.76
*Q3007	G	P32 sodium, per mCi	1624		$74.10		$9.04
*Q3008	G	IN 111 Pentetreotide, per mCi	1625		$283.42		$37.98
*Q3009	G	TC 99M Oxidronate, per vial	1626		$38.38		$4.68
*Q3010	G	TC-99 labeled red blood cell, per test	1627		$38.95		$4.75
*Q3011	G	P32 phosphate chromic, per mCi	1628		$137.12		$16.73
Q9920	A	Epoetin with hct <= 20					
Q9921	A	Epoetin with hct = 21					
Q9922	A	Epoetin with hct = 22					
Q9923	A	Epoetin with hct = 23					
Q9924	A	Epoetin with hct = 24					
Q9925	A	Epoetin with hct = 25					
Q9926	A	Epoetin with hct = 26					
Q9927	A	Epoetin with hct = 27					
Q9928	A	Epoetin with hct = 28					
Q9929	A	Epoetin with hct = 29					
Q9930	A	Epoetin with hct = 30					
Q9931	A	Epoetin with hct = 31					
Q9932	A	Epoetin with hct = 32					
Q9933	A	Epoetin with hct = 33					

CPT codes and descriptions only are copyright American Medical Association. All Rights Reserved. Applicable FARS/DFARS Apply.
Copyright American Dental Association. All rights reserved.
*Code is new in 2001.

ADDENDUM B.—HOSPITAL OUTPATIENT DEPARTMENT (HOPD) PAYMENT STATUS BY HCPCS CODE AND RELATED INFORMATION—Continued

CPT/ HCPCS	HOPD Status Indicator	Description	APC	Relative Weight	Payment Rate	National Unadjusted Coinsurance	Minimum Unadjusted Coinsurance
Q9934	A	Epoetin with hct = 34					
Q9935	A	Epoetin with hct = 35					
Q9936	A	Epoetin with hct = 36					
Q9937	A	Epoetin with hct = 37					
Q9938	A	Epoetin with hct = 38					
Q9939	A	Epoetin with hct = 39					
Q9940	A	Epoetin with hct >= 40					
R0070	N	Transport portable x-ray					
R0075	N	Transport port x-ray multipl					
R0076	N	Transport portable EKG					
V2020	A	Vision svcs frames purchases					
V2025	E	Eyeglasses delux frames					
V2100	A	Lens spher single plano 4.00					
V2101	A	Single visn sphere 4.12-7.00					
V2102	A	Singl visn sphere 7.12-20.00					
V2103	A	Spherocylindr 4.00d/12-2.00d					
V2104	A	Spherocylindr 4.00d/2.12-4d					
V2105	A	Spherocylinder 4.00d/4.25-6d					
V2106	A	Spherocylinder 4.00d/>6.00d					
V2107	A	Spherocylinder 4.25d/12-2d					
V2108	A	Spherocylinder 4.25d/2.12-4d					
V2109	A	Spherocylinder 4.25d/4.25-6d					
V2110	A	Spherocylinder 4.25d/over 6d					
V2111	A	Spherocylindr 7.25d/.25-2.25					
V2112	A	Spherocylindr 7.25d/2.25-4d					
V2113	A	Spherocylindr 7.25d/4.25-6d					
V2114	A	Spherocylinder over 12.00d					
V2115	A	Lens lenticular bifocal					
V2116	A	Nonaspheric lens bifocal					
V2117	A	Aspheric lens bifocal					
V2118	A	Lens aniseikonic single					
V2199	A	Lens single vision not oth c					
V2200	A	Lens spher bifoc plano 4.00d					
V2201	A	Lens sphere bifocal 4.12-7.0					
V2202	A	Lens sphere bifocal 7.12-20.					
V2203	A	Lens sphcyl bifocal 4.00d/.1					
V2204	A	Lens sphcy bifocal 4.00d/2.1					
V2205	A	Lens sphcy bifocal 4.00d/4.2					
V2206	A	Lens sphcy bifocal 4.00d/ove					
V2207	A	Lens sphcy bifocal 4.25-7d/.					
V2208	A	Lens sphcy bifocal 4.25-7/2.					
V2209	A	Lens sphcy bifocal 4.25-7/4.					
V2210	A	Lens sphcy bifocal 4.25-7/ov					
V2211	A	Lens sphcy bifo 7.25-12/.25-					
V2212	A	Lens sphcyl bifo 7.25-12/2.2					
V2213	A	Lens sphcyl bifo 7.25-12/4.2					
V2214	A	Lens sphcyl bifocal over 12.					
V2215	A	Lens lenticular bifocal					
V2216	A	Lens lenticular nonaspheric					
V2217	A	Lens lenticular aspheric bif					
V2218	A	Lens aniseikonic bifocal					
V2219	A	Lens bifocal seg width over					
V2220	A	Lens bifocal add over 3.25d					
V2299	A	Lens bifocal speciality					
V2300	A	Lens sphere trifocal 4.00d					
V2301	A	Lens sphere trifocal 4.12-7.					
V2302	A	Lens sphere trifocal 7.12-20					
V2303	A	Lens sphcy trifocal 4.0/.12-					
V2304	A	Lens sphcy trifocal 4.0/2.25					
V2305	A	Lens sphcy trifocal 4.0/4.25					
V2306	A	Lens sphcyl trifocal 4.00/>6					
V2307	A	Lens sphcy trifocal 4.25-7/.					
V2308	A	Lens sphc trifocal 4.25-7/2.					
V2309	A	Lens sphc trifocal 4.25-7/4.					
V2310	A	Lens sphc trifocal 4.25-7/>6					
V2311	A	Lens sphc trifo 7.25-12/.25-					
V2312	A	Lens sphc trifo 7.25-12/2.25					
V2313	A	Lens sphc trifo 7.25-12/4.25					
V2314	A	Lens sphcyl trifocal over 12					
V2315	A	Lens lenticular trifocal					
V2316	A	Lens lenticular nonaspheric					
V2317	A	Lens lenticular aspheric tri					
V2318	A	Lens aniseikonic trifocal					
V2319	A	Lens trifocal seg width > 28					

CPT codes and descriptions only are copyright American Medical Association. All Rights Reserved. Applicable FARS/DFARS Apply.
Copyright American Dental Association. All rights reserved.
*Code is new in 2001.

ADDENDUM B.—HOSPITAL OUTPATIENT DEPARTMENT (HOPD) PAYMENT STATUS BY HCPCS CODE AND RELATED INFORMATION—Continued

CPT/ HCPCS	HOPD Status Indicator	Description	APC	Relative Weight	Payment Rate	National Unadjusted Coinsurance	Minimum Unadjusted Coinsurance
V2320	A	Lens trifocal add over 3.25d					
V2399	A	Lens trifocal speciality					
V2410	A	Lens variab asphericity sing					
V2430	A	Lens variable asphericity bi					
V2499	A	Variable asphericity lens					
V2500	A	Contact lens pmma spherical					
V2501	A	Cntct lens pmma-toric/prism					
V2502	A	Contact lens pmma bifocal					
V2503	A	Cntct lens pmma color vision					
V2510	A	Cntct gas permeable sphericl					
V2511	A	Cntct toric prism ballast					
V2512	A	Cntct lens gas permbl bifocl					
V2513	A	Contact lens extended wear					
V2520	A	Contact lens hydrophilic					
V2521	A	Cntct lens hydrophilic toric					
V2522	A	Cntct lens hydrophil bifocl					
V2523	A	Cntct lens hydrophil extend					
V2530	A	Contact lens gas impermeable					
V2531	A	Contact lens gas permeable					
V2599	A	Contact lens/es other type					
V2600	A	Hand held low vision aids					
V2610	A	Single lens spectacle mount					
V2615	A	Telescop/othr compound lens					
V2623	A	Plastic eye prosth custom					
V2624	A	Polishing artifical eye					
V2625	A	Enlargemnt of eye prosthesis					
V2626	A	Reduction of eye prosthesis					
V2627	A	Scleral cover shell					
V2628	A	Fabrication & fitting					
V2629	A	Prosthetic eye other type					
V2630	N	Anter chamber intraocul lens					
V2631	N	Iris support intraoclr lens					
V2632	N	Post chmbr intraocular lens					
V2700	A	Balance lens					
V2710	A	Glass/plastic slab off prism					
V2715	A	Prism lens/es					
V2718	A	Fresnell prism press-on lens					
V2730	A	Special base curve					
V2740	A	Rose tint plastic					
V2741	A	Non-rose tint plastic					
V2742	A	Rose tint glass					
V2743	A	Non-rose tint glass					
V2744	A	Tint photochromatic lens/es					
V2750	A	Anti-reflective coating					
V2755	A	UV lens/es					
V2760	A	Scratch resistant coating					
V2770	A	Occluder lens/es					
V2780	A	Oversize lens/es					
V2781	E	Progressive lens per lens					
V2785	F	Corneal tissue processing					
V2790	N	Amniotic membrane					
V2799	A	Miscellaneous vision service					
V5008	E	Hearing screening					
V5010	E	Assessment for hearing aid					
V5011	E	Hearing aid fitting/checking					
V5014	E	Hearing aid repair/modifying					
V5020	E	Conformity evaluation					
V5030	E	Body-worn hearing aid air					
V5040	E	Body-worn hearing aid bone					
V5050	E	Body-worn hearing aid in ear					
V5060	E	Behind ear hearing aid					
V5070	E	Glasses air conduction					
V5080	E	Glasses bone conduction					
V5090	E	Hearing aid dispensing fee					
V5100	E	Body-worn bilat hearing aid					
V5110	E	Hearing aid dispensing fee					
V5120	E	Body-worn binaur hearing aid					
V5130	E	In ear binaural hearing aid					
V5140	E	Behind ear binaur hearing ai					
V5150	E	Glasses binaural hearing aid					
V5160	E	Dispensing fee binaural					
V5170	E	Within ear cros hearing aid					
V5180	E	Behind ear cros hearing aid					
V5190	E	Glasses cros hearing aid					

CPT codes and descriptions only are copyright American Medical Association. All Rights Reserved. Applicable FARS/DFARS Apply.
Copyright American Dental Association. All rights reserved.
*Code is new in 2001.

ADDENDUM B.—HOSPITAL OUTPATIENT DEPARTMENT (HOPD) PAYMENT STATUS BY HCPCS CODE AND RELATED INFORMATION—Continued

CPT/ HCPCS	HOPD Status Indicator	Description	APC	Relative Weight	Payment Rate	National Unadjusted Coinsurance	Minimum Unadjusted Coinsurance
V5200	E	Cros hearing aid dispens fee					
V5210	E	In ear bicros hearing aid					
V5220	E	Behind ear bicros hearing ai					
V5230	E	Glasses bicros hearing aid					
V5240	E	Dispensing fee bicros					
V5299	E	Hearing service					
V5336	E	Repair communication device					
V5362	A	Speech screening					
V5363	A	Language screening					
V5364	A	Dysphagia screening					
25310	T	Transplant forearm tendon	0051	27.76	$1,376.79	$675.24	$275.36
25312	T	Transplant forearm tendon	0051	27.76	$1,376.79	$675.24	$275.36
25315	T	Revise palsy hand tendon(s)	0051	27.76	$1,376.79	$675.24	$275.36
25316	T	Revise palsy hand tendon(s)	0051	27.76	$1,376.79	$675.24	$275.36
25320	T	Repair/revise wrist joint	0051	27.76	$1,376.79	$675.24	$275.36
25332	T	Revise wrist joint	0047	22.09	$1,095.58	$537.03	$219.12
25335	T	Realignment of hand	0051	27.76	$1,376.79	$675.24	$275.36
25337	T	Reconstruct ulna/radioulnar	0051	27.76	$1,376.79	$675.24	$275.36
25350	T	Revision of radius	0051	27.76	$1,376.79	$675.24	$275.36
25355	T	Revision of radius	0051	27.76	$1,376.79	$675.24	$275.36
25360	T	Revision of ulna	0050	21.13	$1,047.96	$513.86	$209.59
25365	T	Revise radius & ulna	0050	21.13	$1,047.96	$513.86	$209.59
25370	T	Revise radius or ulna	0051	27.76	$1,376.79	$675.24	$275.36
25375	T	Revise radius & ulna	0051	27.76	$1,376.79	$675.24	$275.36
25390	C	Shorten radius or ulna					
25391	C	Lengthen radius or ulna					
25392	C	Shorten radius & ulna					
25393	C	Lengthen radius & ulna					
25400	T	Repair radius or ulna	0050	21.13	$1,047.96	$513.86	$209.59
25405	T	Repair/graft radius or ulna	0050	21.13	$1,047.96	$513.86	$209.59
25415	T	Repair radius & ulna	0050	21.13	$1,047.96	$513.86	$209.59
25420	C	Repair/graft radius & ulna					
25425	T	Repair/graft radius or ulna	0051	27.76	$1,376.79	$675.24	$275.36
25426	T	Repair/graft radius & ulna	0051	27.76	$1,376.79	$675.24	$275.36
25440	T	Repair/graft wrist bone	0051	27.76	$1,376.79	$675.24	$275.36
25441	T	Reconstruct wrist joint	0048	29.06	$1,441.26	$725.94	$288.25
25442	T	Reconstruct wrist joint	0048	29.06	$1,441.26	$725.94	$288.25
25443	T	Reconstruct wrist joint	0048	29.06	$1,441.26	$725.94	$288.25
25444	T	Reconstruct wrist joint	0048	29.06	$1,441.26	$725.94	$288.25
25445	T	Reconstruct wrist joint	0048	29.06	$1,441.26	$725.94	$288.25
25446	T	Wrist replacement	0048	29.06	$1,441.26	$725.94	$288.25
25447	T	Repair wrist joint(s)	0047	22.09	$1,095.58	$537.03	$219.12
25449	T	Remove wrist joint implant	0047	22.09	$1,095.58	$537.03	$219.12
25450	T	Revision of wrist joint	0051	27.76	$1,376.79	$675.24	$275.36
25455	T	Revision of wrist joint	0051	27.76	$1,376.79	$675.24	$275.36
25490	T	Reinforce radius	0051	27.76	$1,376.79	$675.24	$275.36
25491	T	Reinforce ulna	0051	27.76	$1,376.79	$675.24	$275.36
25492	T	Reinforce radius and ulna	0051	27.76	$1,376.79	$675.24	$275.36
25500	T	Treat fracture of radius	0044	2.17	$107.63	$38.08	$21.53
25505	T	Treat fracture of radius	0044	2.17	$107.63	$38.08	$21.53
25515	T	Treat fracture of radius	0046	22.29	$1,105.50	$535.76	$221.10
25520	T	Treat fracture of radius	0044	2.17	$107.63	$38.08	$21.53
25525	T	Treat fracture of radius	0046	22.29	$1,105.50	$535.76	$221.10
25526	T	Treat fracture of radius	0046	22.29	$1,105.50	$535.76	$221.10
25530	T	Treat fracture of ulna	0044	2.17	$107.63	$38.08	$21.53
25535	T	Treat fracture of ulna	0044	2.17	$107.63	$38.08	$21.53
25545	T	Treat fracture of ulna	0046	22.29	$1,105.50	$535.76	$221.10
25560	T	Treat fracture radius & ulna	0044	2.17	$107.63	$38.08	$21.53
25565	T	Treat fracture radius & ulna	0044	2.17	$107.63	$38.08	$21.53
25574	T	Treat fracture radius & ulna	0046	22.29	$1,105.50	$535.76	$221.10
25575	T	Treat fracture radius/ulna	0046	22.29	$1,105.50	$535.76	$221.10
25600	T	Treat fracture radius/ulna	0044	2.17	$107.63	$38.08	$21.53
25605	T	Treat fracture radius/ulna	0044	2.17	$107.63	$38.08	$21.53
25611	T	Treat fracture radius/ulna	0046	22.29	$1,105.50	$535.76	$221.10
25620	T	Treat fracture radius/ulna	0046	22.29	$1,105.50	$535.76	$221.10
25622	T	Treat wrist bone fracture	0044	2.17	$107.63	$38.08	$21.53
25624	T	Treat wrist bone fracture	0044	2.17	$107.63	$38.08	$21.53
25628	T	Treat wrist bone fracture	0046	22.29	$1,105.50	$535.76	$221.10
25630	T	Treat wrist bone fracture	0044	2.17	$107.63	$38.08	$21.53
25635	T	Treat wrist bone fracture	0044	2.17	$107.63	$38.08	$21.53
25645	T	Treat wrist bone fracture	0046	22.29	$1,105.50	$535.76	$221.10
25650	T	Treat wrist bone fracture	0044	2.17	$107.63	$38.08	$21.53
25660	T	Treat wrist dislocation	0044	2.17	$107.63	$38.08	$21.53
25670	T	Treat wrist dislocation	0046	22.29	$1,105.50	$535.76	$221.10

CPT codes and descriptions only are copyright American Medical Association. All Rights Reserved. Applicable FARS/DFARS Apply.
Copyright American Dental Association. All rights reserved.
*Code is new in 2001.

ADDENDUM B.—HOSPITAL OUTPATIENT DEPARTMENT (HOPD) PAYMENT STATUS BY HCPCS CODE AND RELATED INFORMATION—Continued

CPT/ HCPCS	HOPD Status Indicator	Description	APC	Relative Weight	Payment Rate	National Unadjusted Coinsurance	Minimum Unadjusted Coinsurance
25675	T	Treat wrist dislocation	0044	2.17	$107.63	$38.08	$21.53
25676	T	Treat wrist dislocation	0046	22.29	$1,105.50	$535.76	$221.10
25680	T	Treat wrist fracture	0044	2.17	$107.63	$38.08	$21.53
25685	T	Treat wrist fracture	0046	22.29	$1,105.50	$535.76	$221.10
25690	T	Treat wrist dislocation	0044	2.17	$107.63	$38.08	$21.53
25695	T	Treat wrist dislocation	0046	22.29	$1,105.50	$535.76	$221.10
25800	T	Fusion of wrist joint	0051	27.76	$1,376.79	$675.24	$275.36
25805	T	Fusion/graft of wrist joint	0051	27.76	$1,376.79	$675.24	$275.36
25810	T	Fusion/graft of wrist joint	0051	27.76	$1,376.79	$675.24	$275.36
25820	T	Fusion of hand bones	0053	11.32	$561.42	$253.49	$112.28
25825	T	Fuse hand bones with graft	0054	19.66	$975.06	$472.33	$195.01
25830	T	Fusion, radioulnar jnt/ulna	0051	27.76	$1,376.79	$675.24	$275.36
25900	C	Amputation of forearm					
25905	C	Amputation of forearm					
25907	T	Amputation follow-up surgery	0049	15.04	$745.93	$356.95	$149.19
25909	C	Amputation follow-up surgery					
25915	C	Amputation of forearm					
25920	C	Amputate hand at wrist					
25922	T	Amputate hand at wrist	0049	15.04	$745.93	$356.95	$149.19
25924	C	Amputation follow-up surgery					
25927	C	Amputation of hand					
25929	T	Amputation follow-up surgery	0026	12.11	$600.61	$277.92	$120.12
25931	C	Amputation follow-up surgery					
25999	T	Forearm or wrist surgery	0044	2.17	$107.63	$38.08	$21.53
26010	T	Drainage of finger abscess	0006	2.00	$99.19	$33.95	$19.84
26011	T	Drainage of finger abscess	0007	3.68	$182.51	$72.03	$36.50
26020	T	Drain hand tendon sheath	0053	11.32	$561.42	$253.49	$112.28
26025	T	Drainage of palm bursa	0053	11.32	$561.42	$253.49	$112.28
26030	T	Drainage of palm bursa(s)	0053	11.32	$561.42	$253.49	$112.28
26034	T	Treat hand bone lesion	0053	11.32	$561.42	$253.49	$112.28
26035	T	Decompress fingers/hand	0053	11.32	$561.42	$253.49	$112.28
26037	T	Decompress fingers/hand	0053	11.32	$561.42	$253.49	$112.28
26040	T	Release palm contracture	0054	19.66	$975.06	$472.33	$195.01
26045	T	Release palm contracture	0054	19.66	$975.06	$472.33	$195.01
26055	T	Incise finger tendon sheath	0053	11.32	$561.42	$253.49	$112.28
26060	T	Incision of finger tendon	0053	11.32	$561.42	$253.49	$112.28
26070	T	Explore/treat hand joint	0053	11.32	$561.42	$253.49	$112.28
26075	T	Explore/treat finger joint	0053	11.32	$561.42	$253.49	$112.28
26080	T	Explore/treat finger joint	0053	11.32	$561.42	$253.49	$112.28
26100	T	Biopsy hand joint lining	0053	11.32	$561.42	$253.49	$112.28
26105	T	Biopsy finger joint lining	0053	11.32	$561.42	$253.49	$112.28
26110	T	Biopsy finger joint lining	0053	11.32	$561.42	$253.49	$112.28
26115	T	Removal of hand lesion	0022	12.49	$619.45	$292.94	$123.89
26116	T	Removal of hand lesion	0022	12.49	$619.45	$292.94	$123.89
26117	T	Remove tumor, hand/finger	0022	12.49	$619.45	$292.94	$123.89
26121	T	Release palm contracture	0054	19.66	$975.06	$472.33	$195.01
26123	T	Release palm contracture	0054	19.66	$975.06	$472.33	$195.01
26125	T	Release palm contracture	0054	19.66	$975.06	$472.33	$195.01
26130	T	Remove wrist joint lining	0053	11.32	$561.42	$253.49	$112.28
26135	T	Revise finger joint, each	0054	19.66	$975.06	$472.33	$195.01
26140	T	Revise finger joint, each	0053	11.32	$561.42	$253.49	$112.28
26145	T	Tendon excision, palm/finger	0053	11.32	$561.42	$253.49	$112.28
26160	T	Remove tendon sheath lesion	0053	11.32	$561.42	$253.49	$112.28
26170	T	Removal of palm tendon, each	0053	11.32	$561.42	$253.49	$112.28
26180	T	Removal of finger tendon	0053	11.32	$561.42	$253.49	$112.28
26185	T	Remove finger bone	0053	11.32	$561.42	$253.49	$112.28
26200	T	Remove hand bone lesion	0053	11.32	$561.42	$253.49	$112.28
26205	T	Remove/graft bone lesion	0054	19.66	$975.06	$472.33	$195.01
26210	T	Removal of finger lesion	0053	11.32	$561.42	$253.49	$112.28
26215	T	Remove/graft finger lesion	0053	11.32	$561.42	$253.49	$112.28
26230	T	Partial removal of hand bone	0053	11.32	$561.42	$253.49	$112.28
26235	T	Partial removal, finger bone	0053	11.32	$561.42	$253.49	$112.28
26236	T	Partial removal, finger bone	0053	11.32	$561.42	$253.49	$112.28
26250	T	Extensive hand surgery	0053	11.32	$561.42	$253.49	$112.28
26255	T	Extensive hand surgery	0054	19.66	$975.06	$472.33	$195.01
26260	T	Extensive finger surgery	0053	11.32	$561.42	$253.49	$112.28
26261	T	Extensive finger surgery	0053	11.32	$561.42	$253.49	$112.28
26262	T	Partial removal of finger	0053	11.32	$561.42	$253.49	$112.28
26320	T	Removal of implant from hand	0020	6.51	$322.87	$130.53	$64.57
26350	T	Repair finger/hand tendon	0054	19.66	$975.06	$472.33	$195.01
26352	T	Repair/graft hand tendon	0054	19.66	$975.06	$472.33	$195.01
26356	T	Repair finger/hand tendon	0054	19.66	$975.06	$472.33	$195.01
26357	T	Repair finger/hand tendon	0054	19.66	$975.06	$472.33	$195.01
26358	T	Repair/graft hand tendon	0054	19.66	$975.06	$472.33	$195.01

CPT codes and descriptions only are copyright American Medical Association. All Rights Reserved. Applicable FARS/DFARS Apply.
Copyright American Dental Association. All rights reserved.
*Code is new in 2001.

ADDENDUM B.—HOSPITAL OUTPATIENT DEPARTMENT (HOPD) PAYMENT STATUS BY HCPCS CODE AND RELATED INFORMATION—Continued

CPT/ HCPCS	HOPD Status Indicator	Description	APC	Relative Weight	Payment Rate	National Unadjusted Coinsurance	Minimum Unadjusted Coinsurance
26370	T	Repair finger/hand tendon	0054	19.66	$975.06	$472.33	$195.01
26372	T	Repair/graft hand tendon	0054	19.66	$975.06	$472.33	$195.01
26373	T	Repair finger/hand tendon	0054	19.66	$975.06	$472.33	$195.01
26390	T	Revise hand/finger tendon	0054	19.66	$975.06	$472.33	$195.01
26392	T	Repair/graft hand tendon	0054	19.66	$975.06	$472.33	$195.01
26410	T	Repair hand tendon	0053	11.32	$561.42	$253.49	$112.28
26412	T	Repair/graft hand tendon	0054	19.66	$975.06	$472.33	$195.01
26415	T	Excision, hand/finger tendon	0054	19.66	$975.06	$472.33	$195.01
26416	T	Graft hand or finger tendon	0054	19.66	$975.06	$472.33	$195.01
26418	T	Repair finger tendon	0053	11.32	$561.42	$253.49	$112.28
26420	T	Repair/graft finger tendon	0054	19.66	$975.06	$472.33	$195.01
26426	T	Repair finger/hand tendon	0054	19.66	$975.06	$472.33	$195.01
26428	T	Repair/graft finger tendon	0054	19.66	$975.06	$472.33	$195.01
26432	T	Repair finger tendon	0053	11.32	$561.42	$253.49	$112.28
26433	T	Repair finger tendon	0053	11.32	$561.42	$253.49	$112.28
26434	T	Repair/graft finger tendon	0054	19.66	$975.06	$472.33	$195.01
26437	T	Realignment of tendons	0053	11.32	$561.42	$253.49	$112.28
26440	T	Release palm/finger tendon	0053	11.32	$561.42	$253.49	$112.28
26442	T	Release palm & finger tendon	0054	19.66	$975.06	$472.33	$195.01
26445	T	Release hand/finger tendon	0053	11.32	$561.42	$253.49	$112.28
26449	T	Release forearm/hand tendon	0054	19.66	$975.06	$472.33	$195.01
26450	T	Incision of palm tendon	0053	11.32	$561.42	$253.49	$112.28
26455	T	Incision of finger tendon	0053	11.32	$561.42	$253.49	$112.28
26460	T	Incise hand/finger tendon	0053	11.32	$561.42	$253.49	$112.28
26471	T	Fusion of finger tendons	0053	11.32	$561.42	$253.49	$112.28
26474	T	Fusion of finger tendons	0053	11.32	$561.42	$253.49	$112.28
26476	T	Tendon lengthening	0053	11.32	$561.42	$253.49	$112.28
26477	T	Tendon shortening	0053	11.32	$561.42	$253.49	$112.28
26478	T	Lengthening of hand tendon	0053	11.32	$561.42	$253.49	$112.28
26479	T	Shortening of hand tendon	0053	11.32	$561.42	$253.49	$112.28
26480	T	Transplant hand tendon	0054	19.66	$975.06	$472.33	$195.01
26483	T	Transplant/graft hand tendon	0054	19.66	$975.06	$472.33	$195.01
26485	T	Transplant palm tendon	0054	19.66	$975.06	$472.33	$195.01
26489	T	Transplant/graft palm tendon	0054	19.66	$975.06	$472.33	$195.01
26490	T	Revise thumb tendon	0054	19.66	$975.06	$472.33	$195.01
26492	T	Tendon transfer with graft	0054	19.66	$975.06	$472.33	$195.01
26494	T	Hand tendon/muscle transfer	0054	19.66	$975.06	$472.33	$195.01
26496	T	Revise thumb tendon	0054	19.66	$975.06	$472.33	$195.01
26497	T	Finger tendon transfer	0054	19.66	$975.06	$472.33	$195.01
26498	T	Finger tendon transfer	0054	19.66	$975.06	$472.33	$195.01
26499	T	Revision of finger	0054	19.66	$975.06	$472.33	$195.01
26500	T	Hand tendon reconstruction	0053	11.32	$561.42	$253.49	$112.28
26502	T	Hand tendon reconstruction	0054	19.66	$975.06	$472.33	$195.01
26504	T	Hand tendon reconstruction	0054	19.66	$975.06	$472.33	$195.01
26508	T	Release thumb contracture	0053	11.32	$561.42	$253.49	$112.28
26510	T	Thumb tendon transfer	0054	19.66	$975.06	$472.33	$195.01
26516	T	Fusion of knuckle joint	0054	19.66	$975.06	$472.33	$195.01
26517	T	Fusion of knuckle joints	0054	19.66	$975.06	$472.33	$195.01
26518	T	Fusion of knuckle joints	0054	19.66	$975.06	$472.33	$195.01
26520	T	Release knuckle contracture	0053	11.32	$561.42	$253.49	$112.28
26525	T	Release finger contracture	0053	11.32	$561.42	$253.49	$112.28
26530	T	Revise knuckle joint	0047	22.09	$1,095.58	$537.03	$219.12
26531	T	Revise knuckle with implant	0048	29.06	$1,441.26	$725.94	$288.25
26535	T	Revise finger joint	0047	22.09	$1,095.58	$537.03	$219.12
26536	T	Revise/implant finger joint	0048	29.06	$1,441.26	$725.94	$288.25
26540	T	Repair hand joint	0053	11.32	$561.42	$253.49	$112.28
26541	T	Repair hand joint with graft	0054	19.66	$975.06	$472.33	$195.01
26542	T	Repair hand joint with graft	0053	11.32	$561.42	$253.49	$112.28
26545	T	Reconstruct finger joint	0054	19.66	$975.06	$472.33	$195.01
26546	T	Repair nonunion hand	0054	19.66	$975.06	$472.33	$195.01
26548	T	Reconstruct finger joint	0054	19.66	$975.06	$472.33	$195.01
26550	T	Construct thumb replacement	0054	19.66	$975.06	$472.33	$195.01
26551	C	Great toe-hand transfer					
26553	C	Single transfer, toe-hand					
26554	C	Double transfer, toe-hand					
26555	T	Positional change of finger	0054	19.66	$975.06	$472.33	$195.01
26556	C	Toe joint transfer					
26560	T	Repair of web finger	0053	11.32	$561.42	$253.49	$112.28
26561	T	Repair of web finger	0054	19.66	$975.06	$472.33	$195.01
26562	T	Repair of web finger	0054	19.66	$975.06	$472.33	$195.01
26565	T	Correct metacarpal flaw	0054	19.66	$975.06	$472.33	$195.01
26567	T	Correct finger deformity	0054	19.66	$975.06	$472.33	$195.01
26568	T	Lengthen metacarpal/finger	0054	19.66	$975.06	$472.33	$195.01
26580	T	Repair hand deformity	0054	19.66	$975.06	$472.33	$195.01

CPT codes and descriptions only are copyright American Medical Association. All Rights Reserved. Applicable FARS/DFARS Apply.
Copyright American Dental Association. All rights reserved.
*Code is new in 2001.

ADDENDUM B.—HOSPITAL OUTPATIENT DEPARTMENT (HOPD) PAYMENT STATUS BY HCPCS CODE AND RELATED INFORMATION—Continued

CPT/ HCPCS	HOPD Status Indicator	Description	APC	Relative Weight	Payment Rate	National Unadjusted Coinsurance	Minimum Unadjusted Coinsurance
26585	T	Repair finger deformity	0054	19.66	$975.06	$472.33	$195.01
26587	T	Reconstruct extra finger	0053	11.32	$561.42	$253.49	$112.28
26590	T	Repair finger deformity	0054	19.66	$975.06	$472.33	$195.01
26591	T	Repair muscles of hand	0054	19.66	$975.06	$472.33	$195.01
26593	T	Release muscles of hand	0053	11.32	$561.42	$253.49	$112.28
26596	T	Excision constricting tissue	0054	19.66	$975.06	$472.33	$195.01
26597	T	Release of scar contracture	0054	19.66	$975.06	$472.33	$195.01
26600	T	Treat metacarpal fracture	0044	2.17	$107.63	$38.08	$21.53
26605	T	Treat metacarpal fracture	0044	2.17	$107.63	$38.08	$21.53
26607	T	Treat metacarpal fracture	0044	2.17	$107.63	$38.08	$21.53
26608	T	Treat metacarpal fracture	0046	22.29	$1,105.50	$535.76	$221.10
26615	T	Treat metacarpal fracture	0046	22.29	$1,105.50	$535.76	$221.10
26641	T	Treat thumb dislocation	0044	2.17	$107.63	$38.08	$21.53
26645	T	Treat thumb fracture	0044	2.17	$107.63	$38.08	$21.53
26650	T	Treat thumb fracture	0046	22.29	$1,105.50	$535.76	$221.10
26665	T	Treat thumb fracture	0046	22.29	$1,105.50	$535.76	$221.10
26670	T	Treat hand dislocation	0044	2.17	$107.63	$38.08	$21.53
26675	T	Treat hand dislocation	0045	11.02	$546.55	$277.12	$109.31
26676	T	Pin hand dislocation	0046	22.29	$1,105.50	$535.76	$221.10
26685	T	Treat hand dislocation	0046	22.29	$1,105.50	$535.76	$221.10
26686	T	Treat hand dislocation	0046	22.29	$1,105.50	$535.76	$221.10
26700	T	Treat knuckle dislocation	0043	1.64	$81.34	$25.46	$16.27
26705	T	Treat knuckle dislocation	0045	11.02	$546.55	$277.12	$109.31
26706	T	Pin knuckle dislocation	0044	2.17	$107.63	$38.08	$21.53
26715	T	Treat knuckle dislocation	0046	22.29	$1,105.50	$535.76	$221.10
26720	T	Treat finger fracture, each	0043	1.64	$81.34	$25.46	$16.27
26725	T	Treat finger fracture, each	0043	1.64	$81.34	$25.46	$16.27
26727	T	Treat finger fracture, each	0046	22.29	$1,105.50	$535.76	$221.10
26735	T	Treat finger fracture, each	0046	22.29	$1,105.50	$535.76	$221.10
26740	T	Treat finger fracture, each	0043	1.64	$81.34	$25.46	$16.27
26742	T	Treat finger fracture, each	0044	2.17	$107.63	$38.08	$21.53
26746	T	Treat finger fracture, each	0046	22.29	$1,105.50	$535.76	$221.10
26750	T	Treat finger fracture, each	0043	1.64	$81.34	$25.46	$16.27
26755	T	Treat finger fracture, each	0043	1.64	$81.34	$25.46	$16.27
26756	T	Pin finger fracture, each	0046	22.29	$1,105.50	$535.76	$221.10
26765	T	Treat finger fracture, each	0046	22.29	$1,105.50	$535.76	$221.10
26770	T	Treat finger dislocation	0043	1.64	$81.34	$25.46	$16.27
26775	T	Treat finger dislocation	0045	11.02	$546.55	$277.12	$109.31
26776	T	Pin finger dislocation	0046	22.29	$1,105.50	$535.76	$221.10
26785	T	Treat finger dislocation	0046	22.29	$1,105.50	$535.76	$221.10
26820	T	Thumb fusion with graft	0054	19.66	$975.06	$472.33	$195.01
26841	T	Fusion of thumb	0054	19.66	$975.06	$472.33	$195.01
26842	T	Thumb fusion with graft	0054	19.66	$975.06	$472.33	$195.01
26843	T	Fusion of hand joint	0054	19.66	$975.06	$472.33	$195.01
26844	T	Fusion/graft of hand joint	0054	19.66	$975.06	$472.33	$195.01
26850	T	Fusion of knuckle	0054	19.66	$975.06	$472.33	$195.01
26852	T	Fusion of knuckle with graft	0054	19.66	$975.06	$472.33	$195.01
26860	T	Fusion of finger joint	0054	19.66	$975.06	$472.33	$195.01
26861	T	Fusion of finger jnt, add-on	0054	19.66	$975.06	$472.33	$195.01
26862	T	Fusion/graft of finger joint	0054	19.66	$975.06	$472.33	$195.01
26863	T	Fuse/graft added joint	0054	19.66	$975.06	$472.33	$195.01
26910	T	Amputate metacarpal bone	0054	19.66	$975.06	$472.33	$195.01
26951	T	Amputation of finger/thumb	0053	11.32	$561.42	$253.49	$112.28
26952	T	Amputation of finger/thumb	0053	11.32	$561.42	$253.49	$112.28
26989	T	Hand/finger surgery	0043	1.64	$81.34	$25.46	$16.27
26990	T	Drainage of pelvis lesion	0049	15.04	$745.93	$356.95	$149.19
26991	T	Drainage of pelvis bursa	0049	15.04	$745.93	$356.95	$149.19
26992	C	Drainage of bone lesion					
27000	T	Incision of hip tendon	0049	15.04	$745.93	$356.95	$149.19
27001	T	Incision of hip tendon	0050	21.13	$1,047.96	$513.86	$209.59
27003	T	Incision of hip tendon	0050	21.13	$1,047.96	$513.86	$209.59
27005	C	Incision of hip tendon					
27006	C	Incision of hip tendons					
27025	C	Incision of hip/thigh fascia					
27030	C	Drainage of hip joint					
27033	T	Exploration of hip joint	0051	27.76	$1,376.79	$675.24	$275.36
27035	C	Denervation of hip joint					
27036	C	Excision of hip joint/muscle					
27040	T	Biopsy of soft tissues	0021	10.49	$520.26	$236.51	$104.05
27041	T	Biopsy of soft tissues	0022	12.49	$619.45	$292.94	$123.89
27047	T	Remove hip/pelvis lesion	0022	12.49	$619.45	$292.94	$123.89
27048	T	Remove hip/pelvis lesion	0022	12.49	$619.45	$292.94	$123.89
27049	T	Remove tumor, hip/pelvis	0022	12.49	$619.45	$292.94	$123.89
27050	T	Biopsy of sacroiliac joint	0049	15.04	$745.93	$356.95	$149.19

CPT codes and descriptions only are copyright American Medical Association. All Rights Reserved. Applicable FARS/DFARS Apply.
Copyright American Dental Association. All rights reserved.
*Code is new in 2001.

ADDENDUM B.—HOSPITAL OUTPATIENT DEPARTMENT (HOPD) PAYMENT STATUS BY HCPCS CODE AND RELATED INFORMATION—Continued

CPT/ HCPCS	HOPD Status Indicator	Description	APC	Relative Weight	Payment Rate	National Unadjusted Coinsurance	Minimum Unadjusted Coinsurance
27052	T	Biopsy of hip joint	0049	15.04	$745.93	$356.95	$149.19
27054	C	Removal of hip joint lining					
27060	T	Removal of ischial bursa	0049	15.04	$745.93	$356.95	$149.19
27062	T	Remove femur lesion/bursa	0049	15.04	$745.93	$356.95	$149.19
27065	T	Removal of hip bone lesion	0049	15.04	$745.93	$356.95	$149.19
27066	T	Removal of hip bone lesion	0050	21.13	$1,047.96	$513.86	$209.59
27067	T	Remove/graft hip bone lesion	0050	21.13	$1,047.96	$513.86	$209.59
27070	C	Partial removal of hip bone					
27071	C	Partial removal of hip bone					
27075	C	Extensive hip surgery					
27076	C	Extensive hip surgery					
27077	C	Extensive hip surgery					
27078	C	Extensive hip surgery					
27079	C	Extensive hip surgery					
27080	T	Removal of tail bone	0050	21.13	$1,047.96	$513.86	$209.59
27086	T	Remove hip foreign body	0019	4.00	$198.39	$78.91	$39.68
27087	T	Remove hip foreign body	0049	15.04	$745.93	$356.95	$149.19
27090	C	Removal of hip prosthesis					
27091	C	Removal of hip prosthesis					
27093	N	Injection for hip x-ray					
27095	N	Injection for hip x-ray					
27096	N	Inject sacroiliac joint					
27097	T	Revision of hip tendon	0050	21.13	$1,047.96	$513.86	$209.59
27098	T	Transfer tendon to pelvis	0050	21.13	$1,047.96	$513.86	$209.59
27100	T	Transfer of abdominal muscle	0051	27.76	$1,376.79	$675.24	$275.36
27105	T	Transfer of spinal muscle	0051	27.76	$1,376.79	$675.24	$275.36
27110	T	Transfer of iliopsoas muscle	0051	27.76	$1,376.79	$675.24	$275.36
27111	T	Transfer of iliopsoas muscle	0051	27.76	$1,376.79	$675.24	$275.36
27120	C	Reconstruction of hip socket					
27122	C	Reconstruction of hip socket					
27125	C	Partial hip replacement					
27130	C	Total hip replacement					
27132	C	Total hip replacement					
27134	C	Revise hip joint replacement					
27137	C	Revise hip joint replacement					
27138	C	Revise hip joint replacement					
27140	C	Transplant femur ridge					
27146	C	Incision of hip bone					
27147	C	Revision of hip bone					
27151	C	Incision of hip bones					
27156	C	Revision of hip bones					
27158	C	Revision of pelvis					
27161	C	Incision of neck of femur					
27165	C	Incision/fixation of femur					
27170	C	Repair/graft femur head/neck					
27175	C	Treat slipped epiphysis					
27176	C	Treat slipped epiphysis					
27177	C	Treat slipped epiphysis					
27178	C	Treat slipped epiphysis					
27179	C	Revise head/neck of femur					
27181	C	Treat slipped epiphysis					
27185	C	Revision of femur epiphysis					
27187	C	Reinforce hip bones					
27193	T	Treat pelvic ring fracture	0044	2.17	$107.63	$38.08	$21.53
27194	T	Treat pelvic ring fracture	0045	11.02	$546.55	$277.12	$109.31
27200	T	Treat tail bone fracture	0043	1.64	$81.34	$25.46	$16.27
27202	T	Treat tail bone fracture	0046	22.29	$1,105.50	$535.76	$221.10
27215	C	Treat pelvic fracture(s)					
27216	C	Treat pelvic ring fracture					
27217	C	Treat pelvic ring fracture					
27218	C	Treat pelvic ring fracture					
27220	T	Treat hip socket fracture	0044	2.17	$107.63	$38.08	$21.53
27222	C	Treat hip socket fracture					
27226	C	Treat hip wall fracture					
27227	C	Treat hip fracture(s)					
27228	C	Treat hip fracture(s)					
27230	T	Treat thigh fracture	0044	2.17	$107.63	$38.08	$21.53
27232	C	Treat thigh fracture					
27235	C	Treat thigh fracture					
27236	C	Treat thigh fracture					
27238	T	Treat thigh fracture	0044	2.17	$107.63	$38.08	$21.53
27240	C	Treat thigh fracture					
27244	C	Treat thigh fracture					
27245	C	Treat thigh fracture					

CPT codes and descriptions only are copyright American Medical Association. All Rights Reserved. Applicable FARS/DFARS Apply.
Copyright American Dental Association. All rights reserved.
*Code is new in 2001.

ADDENDUM B.—HOSPITAL OUTPATIENT DEPARTMENT (HOPD) PAYMENT STATUS BY HCPCS CODE AND RELATED INFORMATION—Continued

CPT/ HCPCS	HOPD Status Indicator	Description	APC	Relative Weight	Payment Rate	National Unadjusted Coinsurance	Minimum Unadjusted Coinsurance
27246	T	Treat thigh fracture	0044	2.17	$107.63	$38.08	$21.53
27248	C	Treat thigh fracture					
27250	T	Treat hip dislocation	0044	2.17	$107.63	$38.08	$21.53
27252	T	Treat hip dislocation	0045	11.02	$546.55	$277.12	$109.31
27253	C	Treat hip dislocation					
27254	C	Treat hip dislocation					
27256	T	Treat hip dislocation	0044	2.17	$107.63	$38.08	$21.53
27257	T	Treat hip dislocation	0045	11.02	$546.55	$277.12	$109.31
27258	C	Treat hip dislocation					
27259	C	Treat hip dislocation					
27265	T	Treat hip dislocation	0044	2.17	$107.63	$38.08	$21.53
27266	T	Treat hip dislocation	0047	22.09	$1,095.58	$537.03	$219.12
27275	T	Manipulation of hip joint	0045	11.02	$546.55	$277.12	$109.31

CPT codes and descriptions only are copyright American Medical Association. All Rights Reserved. Applicable FARS/DFARS Apply.
Copyright American Dental Association. All rights reserved.
*Code is new in 2001.

Addendum C—[Reserved]

ADDENDUM D.—STATUS INDICATORS: HOW VARIOUS SERVICES ARE TREATED UNDER THE HOSPITAL OUTPATIENT PROSPECTIVE PAYMENT SYSTEM

Indicator	Service	Status
A	Pulmonary Rehabilitation Clinical Trial	Not Paid Under Ourpatient PPS.
C	Inpatient Procedures	Admit Patient; Bill as Inpatient.
A	Durable Medical Equipment, Prosthetics and Orthotics	DMEPOS Fee Schedule.
E	Non-Covered Items and Services	Not Paid Under Outpatient PPS.
A	Physical, Occupational and Speech Therapy	Rehabilitation Fee Schedule.
A	Ambulance	Ambulance Fee Schedule.
A	EPO for ESRD Patients	National Rate.
A	Clinical Diagnostic Laboratory Services	Laboratory Fee Schedule.
A	Physician Services for ESRD Patients	Not Paid Under Outpatient PPS.
A	Screening Mammography	Lower of Charges or National Rate.
N	Incidental Services, packaged into APC Rate	Packaged.
P	Partial Hospitalization	Paid Per Diem APC.
S	Significant Procedure, Not Discounted When Multiple	Paid Under Outpatient PPS.
T	Significant Procedure, Multiple Procedure Reduction Applies	Paid Under Outpatient PPS.
V	Visit to Clinic or Emergency Department	Paid Under Outpatient PPS.
X	Ancillary Service	Paid Under Outpatient PPS.
F	Acquisition of Corneal Tissue	Paid at Reasonable Cost.
G	Current Drug/Biological Pass-Through	Additional Payment.
H	Device Pass-Through	Additional Payment.
J	New Drug/Biological Pass-Through	Additional Payment.
K	Non Pass-Through Drug/Biological	Paid Under Outpatient PPS.

ADDENDUM E.—CPT CODES WHICH WILL BE PAID ONLY AS INPATIENT PROCEDURES

[Calendar Year 2001]

CPT/ HCPCS	HOPD status indicator	Description
15756	C	Free muscle flap, microvasc
15757	C	Free skin flap, microvasc
15758	C	Free fascial flap, microvasc
16035	C	Incision of burn scab
*16036	C	Incision of burn scab
19200	C	Removal of breast
19220	C	Removal of breast
19271	C	Revision of chest wall
19272	C	Extensive chest wall surgery
19361	C	Breast reconstruction
19364	C	Breast reconstruction
19367	C	Breast reconstruction
19368	C	Breast reconstruction
19369	C	Breast reconstruction
20660	C	Apply, remove fixation device
20661	C	Application of head brace
20662	C	Application of pelvis brace

ADDENDUM E.—CPT CODES WHICH WILL BE PAID ONLY AS INPATIENT PROCEDURES—Continued

[Calendar Year 2001]

CPT/ HCPCS	HOPD status indicator	Description
20663	C	Application of thigh brace
20664	C	Halo brace application
20802	C	Replantation, arm, complete
20805	C	Replant, forearm, complete
20808	C	Replantation hand, complete
20816	C	Replantation digit, complete
20822	C	Replantation digit, complete
20824	C	Replantation thumb, complete
20827	C	Replantation thumb, complete
20838	C	Replantation foot, complete
20930	C	Spinal bone allograft
20931	C	Spinal bone allograft
20936	C	Spinal bone autograft
20937	C	Spinal bone autograft
20938	C	Spinal bone autograft

ADDENDUM E.—CPT CODES WHICH WILL BE PAID ONLY AS INPATIENT PROCEDURES—Continued

[Calendar Year 2001]

CPT/ HCPCS	HOPD status indicator	Description
20955	C	Fibula bone graft, microvasc
20956	C	Iliac bone graft, microvasc
20957	C	Mt bone graft, microvasc
20962	C	Other bone graft, microvasc
20969	C	Bone/skin graft, microvasc
20970	C	Bone/skin graft, iliac crest
20972	C	Bone/skin graft, metatarsal
20973	C	Bone/skin graft, great toe
21045	C	Extensive jaw surgery
21141	C	Reconstruct midface, lefort
21142	C	Reconstruct midface, lefort
21143	C	Reconstruct midface, lefort
21145	C	Reconstruct midface, lefort
21146	C	Reconstruct midface, lefort
21147	C	Reconstruct midface, lefort

CPT codes and descriptions only are copyright American Medical Association. All Rights Reserved. Applicable FARS/DFARS Apply.
Copyright American Dental Association. All rights reserved.
*Code is new in 2001.

ADDENDUM E.—CPT CODES WHICH WILL BE PAID ONLY AS INPATIENT PROCEDURES—Continued

[Calendar Year 2001]

CPT/ HCPCS	HOPD status indicator	Description
21150	C	Reconstruct midface, lefort
21151	C	Reconstruct midface, lefort
21154	C	Reconstruct midface, lefort
21155	C	Reconstruct midface, lefort
21159	C	Reconstruct midface, lefort
21160	C	Reconstruct midface, lefort
21172	C	Reconstruct orbit/forehead
21175	C	Reconstruct orbit/forehead
21179	C	Reconstruct entire forehead
21180	C	Reconstruct entire forehead
21182	C	Reconstruct cranial bone
21183	C	Reconstruct cranial bone
21184	C	Reconstruct cranial bone
21188	C	Reconstruction of midface
21193	C	Reconstruct lower jaw bone
21194	C	Reconstruct lower jaw bone
21195	C	Reconstruct lower jaw bone
21196	C	Reconstruct lower jaw bone
21247	C	Reconstruct lower jaw bone
21255	C	Reconstruct lower jaw bone
21256	C	Reconstruction of orbit
21268	C	Revise eye sockets
21343	C	Treatment of sinus fracture
21344	C	Treatment of sinus fracture
21346	C	Treat nose/jaw fracture
21347	C	Treat nose/jaw fracture
21348	C	Treat nose/jaw fracture
21356	C	Treat cheek bone fracture
21360	C	Treat cheek bone fracture
21365	C	Treat cheek bone fracture
21366	C	Treat cheek bone fracture
21385	C	Treat eye socket fracture
21386	C	Treat eye socket fracture
21387	C	Treat eye socket fracture
21390	C	Treat eye socket fracture
21395	C	Treat eye socket fracture
21408	C	Treat eye socket fracture
21422	C	Treat mouth roof fracture
21423	C	Treat mouth roof fracture
21431	C	Treat craniofacial fracture
21432	C	Treat craniofacial fracture
21433	C	Treat craniofacial fracture
21435	C	Treat craniofacial fracture
21436	C	Treat craniofacial fracture
21495	C	Treat hyoid bone fracture
21510	C	Drainage of bone lesion
21557	C	Remove tumor, neck/chest
21615	C	Removal of rib
21616	C	Removal of rib and nerves
21620	C	Partial removal of sternum
21627	C	Sternal debridement
21630	C	Extensive sternum surgery
21632	C	Extensive sternum surgery
21705	C	Revision of neck muscle/rib
21740	C	Reconstruction of sternum
21750	C	Repair of sternum separation
21810	C	Treatment of rib fracture(s)
21825	C	Treat sternum fracture
22100	C	Remove part of neck vertebra
22101	C	Remove part, thorax vertebra
22102	C	Remove part, lumbar vertebra
22103	C	Remove extra spine segment
22110	C	Remove part of neck vertebra
22112	C	Remove part, thorax vertebra
22114	C	Remove part, lumbar vertebra
22116	C	Remove extra spine segment
22210	C	Revision of neck spine
22212	C	Revision of thorax spine
22214	C	Revision of lumbar spine
22216	C	Revise, extra spine segment
22220	C	Revision of neck spine

ADDENDUM E.—CPT CODES WHICH WILL BE PAID ONLY AS INPATIENT PROCEDURES—Continued

[Calendar Year 2001]

CPT/ HCPCS	HOPD status indicator	Description
22222	C	Revision of thorax spine
22224	C	Revision of lumbar spine
22226	C	Revise, extra spine segment
22318	C	Treat odontoid fx w/o graft
22319	C	Treat odontoid fx w/graft
22325	C	Treat spine fracture
22326	C	Treat neck spine fracture
22327	C	Treat thorax spine fracture
22328	C	Treat each add spine fx
22548	C	Neck spine fusion
22554	C	Neck spine fusion
22556	C	Thorax spine fusion
22558	C	Lumbar spine fusion
22585	C	Additional spinal fusion
22590	C	Spine & skull spinal fusion
22595	C	Neck spinal fusion
22600	C	Neck spine fusion
22610	C	Thorax spine fusion
22612	C	Lumbar spine fusion
22614	C	Spine fusion, extra segment
22630	C	Lumbar spine fusion
22632	C	Spine fusion, extra segment
22800	C	Fusion of spine
22802	C	Fusion of spine
22804	C	Fusion of spine
22808	C	Fusion of spine
22810	C	Fusion of spine
22812	C	Fusion of spine
22818	C	Kyphectomy, 1-2 segments
22819	C	Kyphectomy, 3 or more
22830	C	Exploration of spinal fusion
22840	C	Insert spine fixation device
22841	C	Insert spine fixation device
22842	C	Insert spine fixation device
22843	C	Insert spine fixation device
22844	C	Insert spine fixation device
22845	C	Insert spine fixation device
22846	C	Insert spine fixation device
22847	C	Insert spine fixation device
22848	C	Insert pelv fixation device
22849	C	Reinsert spinal fixation
22850	C	Remove spine fixation device
22851	C	Apply spine prosth device
22852	C	Remove spine fixation device
22855	C	Remove spine fixation device
23035	C	Drain shoulder bone lesion
23125	C	Removal of collar bone
23195	C	Removal of head of humerus
23200	C	Removal of collar bone
23210	C	Removal of shoulder blade
23220	C	Partial removal of humerus
23221	C	Partial removal of humerus
23222	C	Partial removal of humerus
23332	C	Remove shoulder foreign body
23395	C	Muscle transfer, shoulder/arm
23397	C	Muscle transfers
23400	C	Fixation of shoulder blade
23440	C	Remove/transplant tendon
23470	C	Reconstruct shoulder joint
23472	C	Reconstruct shoulder joint
23900	C	Amputation of arm & girdle
23920	C	Amputation at shoulder joint
24149	C	Radical resection of elbow
24150	C	Extensive humerus surgery
24151	C	Extensive humerus surgery
24152	C	Extensive radius surgery
24153	C	Extensive radius surgery
24900	C	Amputation of upper arm
24920	C	Amputation of upper arm
24930	C	Amputation follow-up surgery
24931	C	Amputate upper arm & implant

ADDENDUM E.—CPT CODES WHICH WILL BE PAID ONLY AS INPATIENT PROCEDURES—Continued

[Calendar Year 2001]

CPT/ HCPCS	HOPD status indicator	Description
24940	C	Revision of upper arm
25170	C	Extensive forearm surgery
25390	C	Shorten radius or ulna
25391	C	Lengthen radius or ulna
25392	C	Shorten radius & ulna
25393	C	Lengthen radius & ulna
25420	C	Repair/graft radius & ulna
25900	C	Amputation of forearm
25905	C	Amputation of forearm
25909	C	Amputation follow-up surgery
25915	C	Amputation of forearm
25920	C	Amputate hand at wrist
25924	C	Amputation follow-up surgery
25927	C	Amputation of hand
25931	C	Amputation follow-up surgery
26551	C	Great toe-hand transfer
26553	C	Single transfer, toe-hand
26554	C	Double transfer, toe-hand
26556	C	Toe joint transfer
26992	C	Drainage of bone lesion
27005	C	Incision of hip tendon
27006	C	Incision of hip tendons
27025	C	Incision of hip/thigh fascia
27030	C	Drainage of hip joint
27035	C	Denervation of hip joint
27036	C	Excision of hip joint/muscle
27054	C	Removal of hip joint lining
27070	C	Partial removal of hip bone
27071	C	Partial removal of hip bone
27075	C	Extensive hip surgery
27076	C	Extensive hip surgery
27077	C	Extensive hip surgery
27078	C	Extensive hip surgery
27079	C	Extensive hip surgery
27090	C	Removal of hip prosthesis
27091	C	Removal of hip prosthesis
27120	C	Reconstruction of hip socket
27122	C	Reconstruction of hip socket
27125	C	Partial hip replacement
27130	C	Total hip replacement
27132	C	Total hip replacement
27134	C	Revise hip joint replacement
27137	C	Revise hip joint replacement
27138	C	Revise hip joint replacement
27140	C	Transplant femur ridge
27146	C	Incision of hip bone
27147	C	Revision of hip bone
27151	C	Incision of hip bones
27156	C	Revision of hip bones
27158	C	Revision of pelvis
27161	C	Incision of neck of femur
27165	C	Incision/fixation of femur
27170	C	Repair/graft femur head/neck
27175	C	Treat slipped epiphysis
27176	C	Treat slipped epiphysis
27177	C	Treat slipped epiphysis
27178	C	Treat slipped epiphysis
27179	C	Revise head/neck of femur
27181	C	Treat slipped epiphysis
27185	C	Revision of femur epiphysis
27187	C	Reinforce hip bones
27215	C	Treat pelvic fracture(s)
27216	C	Treat pelvic ring fracture
27217	C	Treat pelvic ring fracture
27218	C	Treat pelvic ring fracture
27222	C	Treat hip socket fracture
27226	C	Treat hip wall fracture
27227	C	Treat hip fracture(s)
27228	C	Treat hip fracture(s)
27232	C	Treat thigh fracture
27235	C	Treat thigh fracture

CPT codes and descriptions only are copyright American Medical Association. All Rights Reserved. Applicable FARS/DFARS Apply.
Copyright American Dental Association. All rights reserved.

*Code is new in 2001.

ADDENDUM E.—CPT CODES WHICH WILL BE PAID ONLY AS INPATIENT PROCEDURES—Continued

[Calendar Year 2001]

CPT/ HCPCS	HOPD status indicator	Description
27236	C	Treat thigh fracture
27240	C	Treat thigh fracture
27244	C	Treat thigh fracture
27245	C	Treat thigh fracture
27248	C	Treat thigh fracture
27253	C	Treat hip dislocation
27254	C	Treat hip dislocation
27258	C	Treat hip dislocation
27259	C	Treat hip dislocation
27280	C	Fusion of sacroiliac joint
27282	C	Fusion of pubic bones
27284	C	Fusion of hip joint
27286	C	Fusion of hip joint
27290	C	Amputation of leg at hip
27295	C	Amputation of leg at hip
27303	C	Drainage of bone lesion
27365	C	Extensive leg surgery
27445	C	Revision of knee joint
27446	C	Revision of knee joint
27447	C	Total knee replacement
27448	C	Incision of thigh
27450	C	Incision of thigh
27454	C	Realignment of thigh bone
27455	C	Realignment of knee
27457	C	Realignment of knee
27465	C	Shortening of thigh bone
27466	C	Lengthening of thigh bone
27468	C	Shorten/lengthen thighs
27470	C	Repair of thigh
27472	C	Repair/graft of thigh
27475	C	Surgery to stop leg growth
27477	C	Surgery to stop leg growth
27479	C	Surgery to stop leg growth
27485	C	Surgery to stop leg growth
27486	C	Revise/replace knee joint
27487	C	Revise/replace knee joint
27488	C	Removal of knee prosthesis
27495	C	Reinforce thigh
27506	C	Treatment of thigh fracture
27507	C	Treatment of thigh fracture
27511	C	Treatment of thigh fracture
27513	C	Treatment of thigh fracture
27514	C	Treatment of thigh fracture
27519	C	Treat thigh fx growth plate
27535	C	Treat knee fracture
27536	C	Treat knee fracture
27540	C	Treat knee fracture
27556	C	Treat knee dislocation
27557	C	Treat knee dislocation
27558	C	Treat knee dislocation
27580	C	Fusion of knee
27590	C	Amputate leg at thigh
27591	C	Amputate leg at thigh
27592	C	Amputate leg at thigh
27596	C	Amputation follow-up surgery
27598	C	Amputate lower leg at knee
27645	C	Extensive lower leg surgery
27646	C	Extensive lower leg surgery
27702	C	Reconstruct ankle joint
27703	C	Reconstruction, ankle joint
27712	C	Realignment of lower leg
27715	C	Revision of lower leg
27720	C	Repair of tibia
27722	C	Repair/graft of tibia
27724	C	Repair/graft of tibia
27725	C	Repair of lower leg
27727	C	Repair of lower leg
27880	C	Amputation of lower leg
27881	C	Amputation of lower leg
27882	C	Amputation of lower leg
27886	C	Amputation follow-up surgery

ADDENDUM E.—CPT CODES WHICH WILL BE PAID ONLY AS INPATIENT PROCEDURES—Continued

[Calendar Year 2001]

CPT/ HCPCS	HOPD status indicator	Description
27888	C	Amputation of foot at ankle
28800	C	Amputation of midfoot
28805	C	Amputation thru metatarsal
31225	C	Removal of upper jaw
31230	C	Removal of upper jaw
31290	C	Nasal/sinus endoscopy, surg
31291	C	Nasal/sinus endoscopy, surg
31292	C	Nasal/sinus endoscopy, surg
31293	C	Nasal/sinus endoscopy, surg
31294	C	Nasal/sinus endoscopy, surg
31360	C	Removal of larynx
31365	C	Removal of larynx
31367	C	Partial removal of larynx
31368	C	Partial removal of larynx
31370	C	Partial removal of larynx
31375	C	Partial removal of larynx
31380	C	Partial removal of larynx
31382	C	Partial removal of larynx
31390	C	Removal of larynx & pharynx
31395	C	Reconstruct larynx & pharynx
31582	C	Revision of larynx
31584	C	Treat larynx fracture
31587	C	Revision of larynx
31725	C	Clearance of airways
31760	C	Repair of windpipe
31766	C	Reconstruction of windpipe
31770	C	Repair/graft of bronchus
31775	C	Reconstruct bronchus
31780	C	Reconstruct windpipe
31781	C	Reconstruct windpipe
31785	C	Remove windpipe lesion
31786	C	Remove windpipe lesion
31800	C	Repair of windpipe injury
31805	C	Repair of windpipe injury
32035	C	Exploration of chest
32036	C	Exploration of chest
32095	C	Biopsy through chest wall
32100	C	Exploration/biopsy of chest
32110	C	Explore/repair chest
32120	C	Re-exploration of chest
32124	C	Explore chest free adhesions
32140	C	Removal of lung lesion(s)
32141	C	Remove/treat lung lesions
32150	C	Removal of lung lesion(s)
32151	C	Remove lung foreign body
32160	C	Open chest heart massage
32200	C	Drain, open, lung lesion
32201	C	Drain, percut, lung lesion
32215	C	Treat chest lining
32220	C	Release of lung
32225	C	Partial release of lung
32310	C	Removal of chest lining
32320	C	Free/remove chest lining
32402	C	Open biopsy chest lining
32440	C	Removal of lung
32442	C	Sleeve pneumonectomy
32445	C	Removal of lung
32480	C	Partial removal of lung
32482	C	Bilobectomy
32484	C	Segmentectomy
32486	C	Sleeve lobectomy
32488	C	Completion pneumonectomy
32491	C	Lung volume reduction
32500	C	Partial removal of lung
32501	C	Repair bronchus add-on
32520	C	Remove lung & revise chest
32522	C	Remove lung & revise chest
32525	C	Remove lung & revise chest
32540	C	Removal of lung lesion
32650	C	Thoracoscopy, surgical
32651	C	Thoracoscopy, surgical

ADDENDUM E.—CPT CODES WHICH WILL BE PAID ONLY AS INPATIENT PROCEDURES—Continued

[Calendar Year 2001]

CPT/ HCPCS	HOPD status indicator	Description
32652	C	Thoracoscopy, surgical
32653	C	Thoracoscopy, surgical
32654	C	Thoracoscopy, surgical
32655	C	Thoracoscopy, surgical
32656	C	Thoracoscopy, surgical
32657	C	Thoracoscopy, surgical
32658	C	Thoracoscopy, surgical
32659	C	Thoracoscopy, surgical
32660	C	Thoracoscopy, surgical
32661	C	Thoracoscopy, surgical
32662	C	Thoracoscopy, surgical
32663	C	Thoracoscopy, surgical
32664	C	Thoracoscopy, surgical
32665	C	Thoracoscopy, surgical
32800	C	Repair lung hernia
32810	C	Close chest after drainage
32815	C	Close bronchial fistula
32820	C	Reconstruct injured chest
32850	C	Donor pneumonectomy
32851	C	Lung transplant, single
32852	C	Lung transplant with bypass
32853	C	Lung transplant, double
32854	C	Lung transplant with bypass
32900	C	Removal of rib(s)
32905	C	Revise & repair chest wall
32906	C	Revise & repair chest wall
32940	C	Revision of lung
32997	C	Total lung lavage
33015	C	Incision of heart sac
33020	C	Incision of heart sac
33025	C	Incision of heart sac
33030	C	Partial removal of heart sac
33031	C	Partial removal of heart sac
33050	C	Removal of heart sac lesion
33120	C	Removal of heart lesion
33130	C	Removal of heart lesion
33140	C	Heart revascularize (tmr)
*33141	C	Heart revascularize (tmr)
33200	C	Insertion of heart pacemaker
33201	C	Insertion of heart pacemaker
33236	C	Remove electrode/ thoracotomy
33237	C	Remove electrode/ thoracotomy
33238	C	Remove electrode/ thoracotomy
33243	C	Remove eltrd/thoracotomy
33245	C	Insert epic eltrd pace-defib
33246	C	Insert epic eltrd/generator
33250	C	Ablate heart dysrhythm focus
33251	C	Ablate heart dysrhythm focus
33253	C	Reconstruct atria
33261	C	Ablate heart dysrhythm focus
33300	C	Repair of heart wound
33305	C	Repair of heart wound
33310	C	Exploratory heart surgery
33315	C	Exploratory heart surgery
33320	C	Repair major blood vessel(s)
33321	C	Repair major vessel
33322	C	Repair major blood vessel(s)
33330	C	Insert major vessel graft
33332	C	Insert major vessel graft
33335	C	Insert major vessel graft
33400	C	Repair of aortic valve
33401	C	Valvuloplasty, open
33403	C	Valvuloplasty, w/cp bypass
33404	C	Prepare heart-aorta conduit
33405	C	Replacement of aortic valve
33406	C	Replacement of aortic valve
33410	C	Replacement of aortic valve
33411	C	Replacement of aortic valve

CPT codes and descriptions only are copyright American Medical Association. All Rights Reserved. Applicable FARS/DFARS Apply.
Copyright American Dental Association. All rights reserved.
*Code is new in 2001.

ADDENDUM E.—CPT CODES WHICH WILL BE PAID ONLY AS INPATIENT PROCEDURES—Continued

[Calendar Year 2001]

CPT/ HCPCS	HOPD status indicator	Description
33412	C	Replacement of aortic valve
33413	C	Replacement of aortic valve
33414	C	Repair of aortic valve
33415	C	Revision, subvalvular tissue
33416	C	Revise ventricle muscle
33417	C	Repair of aortic valve
33420	C	Revision of mitral valve
33422	C	Revision of mitral valve
33425	C	Repair of mitral valve
33426	C	Repair of mitral valve
33427	C	Repair of mitral valve
33430	C	Replacement of mitral valve
33460	C	Revision of tricuspid valve
33463	C	Valvuloplasty, tricuspid
33464	C	Valvuloplasty, tricuspid
33465	C	Replace tricuspid valve
33468	C	Revision of tricuspid valve
33470	C	Revision of pulmonary valve
33471	C	Valvotomy, pulmonary valve
33472	C	Revision of pulmonary valve
33474	C	Revision of pulmonary valve
33475	C	Replacement, pulmonary valve
33476	C	Revision of heart chamber
33478	C	Revision of heart chamber
33496	C	Repair, prosth valve clot
33500	C	Repair heart vessel fistula
33501	C	Repair heart vessel fistula
33502	C	Coronary artery correction
33503	C	Coronary artery graft
33504	C	Coronary artery graft
33505	C	Repair artery w/tunnel
33506	C	Repair artery, translocation
33510	C	CABG, vein, single
33511	C	CABG, vein, two
33512	C	CABG, vein, three
33513	C	CABG, vein, four
33514	C	CABG, vein, five
33516	C	Cabg, vein, six or more
33517	C	CABG, artery-vein, single
33518	C	CABG, artery-vein, two
33519	C	CABG, artery-vein, three
33521	C	CABG, artery-vein, four
33522	C	CABG, artery-vein, five
33523	C	Cabg, art-vein, six or more
33530	C	Coronary artery, bypass/reop
33533	C	CABG, arterial, single
33534	C	CABG, arterial, two
33535	C	CABG, arterial, three
33536	C	Cabg, arterial, four or more
33542	C	Removal of heart lesion
33545	C	Repair of heart damage
33572	C	Open coronary endarterectomy
33600	C	Closure of valve
33602	C	Closure of valve
33606	C	Anastomosis/artery-aorta
33608	C	Repair anomaly w/conduit
33610	C	Repair by enlargement
33611	C	Repair double ventricle
33612	C	Repair double ventricle
33615	C	Repair, simple fontan
33617	C	Repair, modified fontan
33619	C	Repair single ventricle
33641	C	Repair heart septum defect
33645	C	Revision of heart veins
33647	C	Repair heart septum defects
33660	C	Repair of heart defects
33665	C	Repair of heart defects
33670	C	Repair of heart chambers
33681	C	Repair heart septum defect

ADDENDUM E.—CPT CODES WHICH WILL BE PAID ONLY AS INPATIENT PROCEDURES—Continued

[Calendar Year 2001]

CPT/ HCPCS	HOPD status indicator	Description
33684	C	Repair heart septum defect
33688	C	Repair heart septum defect
33690	C	Reinforce pulmonary artery
33692	C	Repair of heart defects
33694	C	Repair of heart defects
33697	C	Repair of heart defects
33702	C	Repair of heart defects
33710	C	Repair of heart defects
33720	C	Repair of heart defect
33722	C	Repair of heart defect
33730	C	Repair heart-vein defect(s)
33732	C	Repair heart-vein defect
33735	C	Revision of heart chamber
33736	C	Revision of heart chamber
33737	C	Revision of heart chamber
33750	C	Major vessel shunt
33755	C	Major vessel shunt
33762	C	Major vessel shunt
33764	C	Major vessel shunt & graft
33766	C	Major vessel shunt
33767	C	Major vessel shunt
33770	C	Repair great vessels defect
33771	C	Repair great vessels defect
33774	C	Repair great vessels defect
33775	C	Repair great vessels defect
33776	C	Repair great vessels defect
33777	C	Repair great vessels defect
33778	C	Repair great vessels defect
33779	C	Repair great vessels defect
33780	C	Repair great vessels defect
33781	C	Repair great vessels defect
33786	C	Repair arterial trunk
33788	C	Revision of pulmonary artery
33800	C	Aortic suspension
33802	C	Repair vessel defect
33803	C	Repair vessel defect
33813	C	Repair septal defect
33814	C	Repair septal defect
33820	C	Revise major vessel
33822	C	Revise major vessel
33824	C	Revise major vessel
33840	C	Remove aorta constriction
33845	C	Remove aorta constriction
33851	C	Remove aorta constriction
33852	C	Repair septal defect
33853	C	Repair septal defect
33860	C	Ascending aortic graft
33861	C	Ascending aortic graft
33863	C	Ascending aortic graft
33870	C	Transverse aortic arch graft
33875	C	Thoracic aortic graft
33877	C	Thoracoabdominal graft
33910	C	Remove lung artery emboli
33915	C	Remove lung artery emboli
33916	C	Surgery of great vessel
33917	C	Repair pulmonary artery
33918	C	Repair pulmonary atresia
33919	C	Repair pulmonary atresia
33920	C	Repair pulmonary atresia
33922	C	Transect pulmonary artery
33924	C	Remove pulmonary shunt
33930	C	Removal of donor heart/lung
33935	C	Transplantation, heart/lung
33940	C	Removal of donor heart
33945	C	Transplantation of heart
33960	C	External circulation assist
33961	C	External circulation assist
33968	C	Remove aortic assist device
33970	C	Aortic circulation assist
33971	C	Aortic circulation assist
33973	C	Insert balloon device

ADDENDUM E.—CPT CODES WHICH WILL BE PAID ONLY AS INPATIENT PROCEDURES—Continued

[Calendar Year 2001]

CPT/ HCPCS	HOPD status indicator	Description
33974	C	Remove intra-aortic balloon
33975	C	Implant ventricular device
33976	C	Implant ventricular device
33977	C	Remove ventricular device
33978	C	Remove ventricular device
34001	C	Removal of artery clot
34051	C	Removal of artery clot
34151	C	Removal of artery clot
34401	C	Removal of vein clot
34451	C	Removal of vein clot
34502	C	Reconstruct vena cava
*34800	C	Repair abdominal aortic aneurysm
*34802	C	Repair abdominal aortic aneurysm
*34804	C	Repair abdominal aortic aneurysm
*34808	C	Repair abdominal aortic aneurysm
*34812	C	Repair abdominal aortic aneurysm
*34813	C	Repair abdominal aortic aneurysm
*34820	C	Repair abdominal aortic aneurysm
*34825	C	Repair abdominal aortic aneurysm
*34826	C	Repair abdominal aortic aneurysm
*34830	C	Repair abdominal aortic aneurysm
*34831	C	Repair abdominal aortic aneurysm
*34832	C	Repair abdominal aortic aneurysm
35001	C	Repair defect of artery
35002	C	Repair artery rupture, neck
35005	C	Repair defect of artery
35013	C	Repair artery rupture, arm
35021	C	Repair defect of artery
35022	C	Repair artery rupture, chest
35045	C	Repair defect of arm artery
35081	C	Repair defect of artery
35082	C	Repair artery rupture, aorta
35091	C	Repair defect of artery
35092	C	Repair artery rupture, aorta
35102	C	Repair defect of artery
35103	C	Repair artery rupture, groin
35111	C	Repair defect of artery
35112	C	Repair artery rupture,spleen
35121	C	Repair defect of artery
35122	C	Repair artery rupture, belly
35131	C	Repair defect of artery
35132	C	Repair artery rupture, groin
35141	C	Repair defect of artery
35142	C	Repair artery rupture, thigh
35151	C	Repair defect of artery
35152	C	Repair artery rupture, knee
35161	C	Repair defect of artery
35162	C	Repair artery rupture
35182	C	Repair blood vessel lesion
35189	C	Repair blood vessel lesion
35211	C	Repair blood vessel lesion
35216	C	Repair blood vessel lesion
35221	C	Repair blood vessel lesion
35241	C	Repair blood vessel lesion
35246	C	Repair blood vessel lesion
35251	C	Repair blood vessel lesion
35271	C	Repair blood vessel lesion
35276	C	Repair blood vessel lesion
35281	C	Repair blood vessel lesion

CPT codes and descriptions only are copyright American Medical Association. All Rights Reserved. Applicable FARS/DFARS Apply.
Copyright American Dental Association. All rights reserved.

*Code is new in 2001.

ADDENDUM E.—CPT CODES WHICH WILL BE PAID ONLY AS INPATIENT PROCEDURES—Continued

[Calendar Year 2001]

CPT/ HCPCS	HOPD status indicator	Description
35301	C	Rechanneling of artery
35311	C	Rechanneling of artery
35331	C	Rechanneling of artery
35341	C	Rechanneling of artery
35351	C	Rechanneling of artery
35355	C	Rechanneling of artery
35361	C	Rechanneling of artery
35363	C	Rechanneling of artery
35371	C	Rechanneling of artery
35372	C	Rechanneling of artery
35381	C	Rechanneling of artery
35390	C	Reoperation, carotid add-on
35400	C	Angioscopy
35450	C	Repair arterial blockage
35452	C	Repair arterial blockage
35454	C	Repair arterial blockage
35456	C	Repair arterial blockage
35480	C	Atherectomy, open
35482	C	Atherectomy, open
35483	C	Atherectomy, open
35501	C	Artery bypass graft
35506	C	Artery bypass graft
35507	C	Artery bypass graft
35508	C	Artery bypass graft
35509	C	Artery bypass graft
35511	C	Artery bypass graft
35515	C	Artery bypass graft
35516	C	Artery bypass graft
35518	C	Artery bypass graft
35521	C	Artery bypass graft
35526	C	Artery bypass graft
35531	C	Artery bypass graft
35533	C	Artery bypass graft
35536	C	Artery bypass graft
35541	C	Artery bypass graft
35546	C	Artery bypass graft
35548	C	Artery bypass graft
35549	C	Artery bypass graft
35551	C	Artery bypass graft
35556	C	Artery bypass graft
35558	C	Artery bypass graft
35560	C	Artery bypass graft
35563	C	Artery bypass graft
35565	C	Artery bypass graft
35566	C	Artery bypass graft
35571	C	Artery bypass graft
35582	C	Vein bypass graft
35583	C	Vein bypass graft
35585	C	Vein bypass graft
35587	C	Vein bypass graft
*35600	C	Harvest artery graft
35601	C	Artery bypass graft
35606	C	Artery bypass graft
35612	C	Artery bypass graft
35616	C	Artery bypass graft
35621	C	Artery bypass graft
35623	C	Bypass graft, not vein
35626	C	Artery bypass graft
35631	C	Artery bypass graft
35636	C	Artery bypass graft
35641	C	Artery bypass graft
35642	C	Artery bypass graft
35645	C	Artery bypass graft
35646	C	Artery bypass graft
35650	C	Artery bypass graft
35651	C	Artery bypass graft
35654	C	Artery bypass graft
35656	C	Artery bypass graft
35661	C	Artery bypass graft
35663	C	Artery bypass graft
35665	C	Artery bypass graft

ADDENDUM E.—CPT CODES WHICH WILL BE PAID ONLY AS INPATIENT PROCEDURES—Continued

[Calendar Year 2001]

CPT/ HCPCS	HOPD status indicator	Description
35666	C	Artery bypass graft
35671	C	Artery bypass graft
35681	C	Composite bypass graft
35682	C	Composite bypass graft
35683	C	Composite bypass graft
35691	C	Arterial transposition
35693	C	Arterial transposition
35694	C	Arterial transposition
35695	C	Arterial transposition
35700	C	Reoperation, bypass graft
35701	C	Exploration, carotid artery
35721	C	Exploration, femoral artery
35741	C	Exploration popliteal artery
35800	C	Explore neck vessels
35820	C	Explore chest vessels
35840	C	Explore abdominal vessels
35870	C	Repair vessel graft defect
35901	C	Excision, graft, neck
35905	C	Excision, graft, thorax
35907	C	Excision, graft, abdomen
36510	C	Insertion of catheter, vein
36660	C	Insertion catheter, artery
36822	C	Insertion of cannula(s)
36823	C	Insertion of cannula(s)
37140	C	Revision of circulation
37145	C	Revision of circulation
37160	C	Revision of circulation
37180	C	Revision of circulation
37181	C	Splice spleen/kidney veins
37195	C	Thrombolytic therapy, stroke
37616	C	Ligation of chest artery
37617	C	Ligation of abdomen artery
37618	C	Ligation of extremity artery
37660	C	Revision of major vein
37788	C	Revascularization, penis
38100	C	Removal of spleen, total
38101	C	Removal of spleen, partial
38102	C	Removal of spleen, total
38115	C	Repair of ruptured spleen
38380	C	Thoracic duct procedure
38381	C	Thoracic duct procedure
38382	C	Thoracic duct procedure
38562	C	Removal, pelvic lymph nodes
38564	C	Removal, abdomen lymph nodes
38700	C	Removal of lymph nodes, neck
38724	C	Removal of lymph nodes, neck
38746	C	Remove thoracic lymph nodes
38747	C	Remove abdominal lymph nodes
38765	C	Remove groin lymph nodes
38770	C	Remove pelvis lymph nodes
38780	C	Remove abdomen lymph nodes
39000	C	Exploration of chest
39010	C	Exploration of chest
39200	C	Removal chest lesion
39220	C	Removal chest lesion
39499	C	Chest procedure
39501	C	Repair diaphragm laceration
39502	C	Repair paraesophageal hernia
39503	C	Repair of diaphragm hernia
39520	C	Repair of diaphragm hernia
39530	C	Repair of diaphragm hernia
39531	C	Repair of diaphragm hernia
39540	C	Repair of diaphragm hernia
39541	C	Repair of diaphragm hernia
39545	C	Revision of diaphragm
39560	C	Resect diaphragm, simple

ADDENDUM E.—CPT CODES WHICH WILL BE PAID ONLY AS INPATIENT PROCEDURES—Continued

[Calendar Year 2001]

CPT/ HCPCS	HOPD status indicator	Description
39561	C	Resect diaphragm, complex
39599	C	Diaphragm surgery procedure
41130	C	Partial removal of tongue
41135	C	Tongue and neck surgery
41140	C	Removal of tongue
41145	C	Tongue removal, neck surgery
41150	C	Tongue, mouth, jaw surgery
41153	C	Tongue, mouth, neck surgery
41155	C	Tongue, jaw, & neck surgery
42426	C	Excise parotid gland/lesion
42842	C	Extensive surgery of throat
42845	C	Extensive surgery of throat
42894	C	Revision of pharyngeal walls
42953	C	Repair throat, esophagus
42961	C	Control throat bleeding
42971	C	Control nose/throat bleeding
43030	C	Throat muscle surgery
43045	C	Incision of esophagus
43100	C	Excision of esophagus lesion
43101	C	Excision of esophagus lesion
43107	C	Removal of esophagus
43108	C	Removal of esophagus
43112	C	Removal of esophagus
43113	C	Removal of esophagus
43116	C	Partial removal of esophagus
43117	C	Partial removal of esophagus
43118	C	Partial removal of esophagus
43121	C	Partial removal of esophagus
43122	C	Parital removal of esophagus
43123	C	Partial removal of esophagus
43124	C	Removal of esophagus
43135	C	Removal of esophagus pouch
43300	C	Repair of esophagus
43305	C	Repair esophagus and fistula
43310	C	Repair of esophagus
43312	C	Repair esophagus and fistula
43320	C	Fuse esophagus & stomach
43324	C	Revise esophagus & stomach
43325	C	Revise esophagus & stomach
43326	C	Revise esophagus & stomach
43330	C	Repair of esophagus
43331	C	Repair of esophagus
43340	C	Fuse esophagus & intestine
43341	C	Fuse esophagus & intestine
43350	C	Surgical opening, esophagus
43351	C	Surgical opening, esophagus
43352	C	Surgical opening, esophagus
43360	C	Gastrointestinal repair
43361	C	Gastrointestinal repair
43400	C	Ligate esophagus veins
43401	C	Esophagus surgery for veins
43405	C	Ligate/staple esophagus
43410	C	Repair esophagus wound
43415	C	Repair esophagus wound
43420	C	Repair esophagus opening
43425	C	Repair esophagus opening
43460	C	Pressure treatment esophagus
43496	C	Free jejunum flap, microvasc
43500	C	Surgical opening of stomach
43501	C	Surgical repair of stomach
43502	C	Surgical repair of stomach
43510	C	Surgical opening of stomach
43520	C	Incision of pyloric muscle
43605	C	Biopsy of stomach
43610	C	Excision of stomach lesion
43611	C	Excision of stomach lesion
43620	C	Removal of stomach
43621	C	Removal of stomach
43622	C	Removal of stomach
43631	C	Removal of stomach, partial
43632	C	Removal of stomach, partial

CPT codes and descriptions only are copyright American Medical Association. All Rights Reserved. Applicable FARS/DFARS Apply.
Copyright American Dental Association. All rights reserved.

*Code is new in 2001.

ADDENDUM E.—CPT CODES WHICH WILL BE PAID ONLY AS INPATIENT PROCEDURES—Continued

[Calendar Year 2001]

CPT/ HCPCS	HOPD status indicator	Description
43633	C	Removal of stomach, partial
43634	C	Removal of stomach, partial
43635	C	Removal of stomach, partial
43638	C	Removal of stomach, partial
43639	C	Removal of stomach, partial
43640	C	Vagotomy & pylorus repair
43641	C	Vagotomy & pylorus repair
43800	C	Reconstruction of pylorus
43810	C	Fusion of stomach and bowel
43820	C	Fusion of stomach and bowel
43825	C	Fusion of stomach and bowel
43832	C	Place gastrostomy tube
43840	C	Repair of stomach lesion
43842	C	Gastroplasty for obesity
43843	C	Gastroplasty for obesity
43846	C	Gastric bypass for obesity
43847	C	Gastric bypass for obesity
43848	C	Revision gastroplasty
43850	C	Revise stomach-bowel fusion
43855	C	Revise stomach-bowel fusion
43860	C	Revise stomach-bowel fusion
43865	C	Revise stomach-bowel fusion
43880	C	Repair stomach-bowel fistula
44005	C	Freeing of bowel adhesion
44010	C	Incision of small bowel
44015	C	Insert needle cath bowel
44020	C	Exploration of small bowel
44021	C	Decompress small bowel
44025	C	Incision of large bowel
44050	C	Reduce bowel obstruction
44055	C	Correct malrotation of bowel
44110	C	Excision of bowel lesion(s)
44111	C	Excision of bowel lesion(s)
44120	C	Removal of small intestine
44121	C	Removal of small intestine
44125	C	Removal of small intestine
*44130	C	Bowel to bowel fusion
*44132	C	Donor enterectomy
*44133	C	Donor enterectomy
*44135	C	Intestinal allotransplantation
*44136	C	Intestinal allotransplantation
44139	C	Mobilization of colon
44140	C	Partial removal of colon
44141	C	Partial removal of colon
44143	C	Partial removal of colon
44144	C	Partial removal of colon
44145	C	Partial removal of colon
44146	C	Partial removal of colon
44147	C	Partial removal of colon
44150	C	Removal of colon
44151	C	Removal of colon/ileostomy
44152	C	Removal of colon/ileostomy
44153	C	Removal of colon/ileostomy
44155	C	Removal of colon/ileostomy
44156	C	Removal of colon/ileostomy
44160	C	Removal of colon
44202	C	Laparo, resect intestine
44300	C	Open bowel to skin
44310	C	Ileostomy/jejunostomy
44314	C	Revision of ileostomy
44316	C	Devise bowel pouch
44320	C	Colostomy
44322	C	Colostomy with biopsies
44345	C	Revision of colostomy
44346	C	Revision of colostomy
44602	C	Suture, small intestine
44603	C	Suture, small intestine
44604	C	Suture, large intestine
44605	C	Repair of bowel lesion
44615	C	Intestinal stricturoplasty
44620	C	Repair bowel opening

ADDENDUM E.—CPT CODES WHICH WILL BE PAID ONLY AS INPATIENT PROCEDURES—Continued

[Calendar Year 2001]

CPT/ HCPCS	HOPD status indicator	Description
44625	C	Repair bowel opening
44626	C	Repair bowel opening
44640	C	Repair bowel-skin fistula
44650	C	Repair bowel fistula
44660	C	Repair bowel-bladder fistula
44661	C	Repair bowel-bladder fistula
44680	C	Surgical revision, intestine
44700	C	Suspend bowel w/prosthesis
44800	C	Excision of bowel pouch
44820	C	Excision of mesentery lesion
44850	C	Repair of mesentery
44899	C	Bowel surgery procedure
44900	C	Drain app abscess, open
44901	C	Drain app abscess, percut
44950	C	Appendectomy
44955	C	Appendectomy add-on
44960	C	Appendectomy
45110	C	Removal of rectum
45111	C	Partial removal of rectum
45112	C	Removal of rectum
45113	C	Partial proctectomy
45114	C	Partial removal of rectum
45116	C	Partial removal of rectum
45119	C	Remove rectum w/reservoir
45120	C	Removal of rectum
45121	C	Removal of rectum and colon
45123	C	Partial proctectomy
45126	C	Pelvic exenteration
45130	C	Excision of rectal prolapse
45135	C	Excision of rectal prolapse
45540	C	Correct rectal prolapse
45541	C	Correct rectal prolapse
45550	C	Repair rectum/remove sigmoid
45562	C	Exploration/repair of rectum
45563	C	Exploration/repair of rectum
45800	C	Repair rect/bladder fistula
45805	C	Repair fistula w/colostomy
45820	C	Repair rectourethral fistula
45825	C	Repair fistula w/colostomy
46705	C	Repair of anal stricture
46715	C	Repair of anovaginal fistula
46716	C	Repair of anovaginal fistula
46730	C	Construction of absent anus
46735	C	Construction of absent anus
46740	C	Construction of absent anus
46742	C	Repair of imperforated anus
46744	C	Repair of cloacal anomaly
46746	C	Repair of cloacal anomaly
46748	C	Repair of cloacal anomaly
46751	C	Repair of anal sphincter
47001	C	Needle biopsy, liver add-on
47010	C	Open drainage, liver lesion
47011	C	Percut drain, liver lesion
47015	C	Inject/aspirate liver cyst
47100	C	Wedge biopsy of liver
47120	C	Partial removal of liver
47122	C	Extensive removal of liver
47125	C	Partial removal of liver
47130	C	Partial removal of liver
47133	C	Removal of donor liver
47134	C	Partial removal, donor liver
47135	C	Transplantation of liver
47136	C	Transplantation of liver
47300	C	Surgery for liver lesion
47350	C	Repair liver wound
47360	C	Repair liver wound
47361	C	Repair liver wound
47362	C	Repair liver wound
47400	C	Incision of liver duct
47420	C	Incision of bile duct
47425	C	Incision of bile duct

ADDENDUM E.—CPT CODES WHICH WILL BE PAID ONLY AS INPATIENT PROCEDURES—Continued

[Calendar Year 2001]

CPT/ HCPCS	HOPD status indicator	Description
47460	C	Incise bile duct sphincter
47480	C	Incision of gallbladder
47490	C	Incision of gallbladder
47550	C	Bile duct endoscopy add-on
47570	C	Laparo cholecystoenterostomy
47600	C	Removal of gallbladder
47605	C	Removal of gallbladder
47610	C	Removal of gallbladder
47612	C	Removal of gallbladder
47620	C	Removal of gallbladder
47700	C	Exploration of bile ducts
47701	C	Bile duct revision
47711	C	Excision of bile duct tumor
47712	C	Excision of bile duct tumor
47715	C	Excision of bile duct cyst
47716	C	Fusion of bile duct cyst
47720	C	Fuse gallbladder & bowel
47721	C	Fuse upper gi structures
47740	C	Fuse gallbladder & bowel
47741	C	Fuse gallbladder & bowel
47760	C	Fuse bile ducts and bowel
47765	C	Fuse liver ducts & bowel
47780	C	Fuse bile ducts and bowel
47785	C	Fuse bile ducts and bowel
47800	C	Reconstruction of bile ducts
47801	C	Placement, bile duct support
47802	C	Fuse liver duct & intestine
47900	C	Suture bile duct injury
48000	C	Drainage of abdomen
48001	C	Placement of drain, pancreas
48005	C	Resect/debride pancreas
48020	C	Removal of pancreatic stone
48100	C	Biopsy of pancreas
48120	C	Removal of pancreas lesion
48140	C	Partial removal of pancreas
48145	C	Partial removal of pancreas
48146	C	Pancreatectomy
48148	C	Removal of pancreatic duct
48150	C	Partial removal of pancreas
48152	C	Pancreatectomy
48153	C	Pancreatectomy
48154	C	Pancreatectomy
48155	C	Removal of pancreas
48180	C	Fuse pancreas and bowel
48400	C	Injection, intraop add-on
48500	C	Surgery of pancreas cyst
48510	C	Drain pancreatic pseudocyst
48511	C	Drain pancreatic pseudocyst
48520	C	Fuse pancreas cyst and bowel
48540	C	Fuse pancreas cyst and bowel
48545	C	Pancreatorrhaphy
48547	C	Duodenal exclusion
48556	C	Removal, allograft pancreas
49000	C	Exploration of abdomen
49002	C	Reopening of abdomen
49010	C	Exploration behind abdomen
49020	C	Drain abdominal abscess
49021	C	Drain abdominal abscess
49040	C	Drain, open, abdom abscess
49041	C	Drain, percut, abdom abscess
49060	C	Drain, open, retrop abscess
49061	C	Drain, percut, retroper absc
49062	C	Drain to peritoneal cavity
49200	C	Removal of abdominal lesion
49201	C	Removal of abdominal lesion
49215	C	Excise sacral spine tumor
49220	C	Multiple surgery, abdomen
49255	C	Removal of omentum
49425	C	Insert abdomen-venous drain
49428	C	Ligation of shunt
49605	C	Repair umbilical lesion

CPT codes and descriptions only are copyright American Medical Association. All Rights Reserved. Applicable FARS/DFARS Apply.
Copyright American Dental Association. All rights reserved.
*Code is new in 2001.

ADDENDUM E.—CPT CODES WHICH WILL BE PAID ONLY AS INPATIENT PROCEDURES—Continued

[Calendar Year 2001]

CPT/ HCPCS	HOPD status indicator	Description
49606	C	Repair umbilical lesion
49610	C	Repair umbilical lesion
49611	C	Repair umbilical lesion
49900	C	Repair of abdominal wall
49905	C	Omental flap
49906	C	Free omental flap, microvasc
50010	C	Exploration of kidney
50020	C	Renal abscess, open drain
50021	C	Renal abscess, percut drain
50040	C	Drainage of kidney
50045	C	Exploration of kidney
50060	C	Removal of kidney stone
50065	C	Incision of kidney
50070	C	Incision of kidney
50075	C	Removal of kidney stone
50100	C	Revise kidney blood vessels
50120	C	Exploration of kidney
50125	C	Explore and drain kidney
50130	C	Removal of kidney stone
50135	C	Exploration of kidney
50205	C	Biopsy of kidney
50220	C	Removal of kidney
50225	C	Removal of kidney
50230	C	Removal of kidney
50234	C	Removal of kidney & ureter
50236	C	Removal of kidney & ureter
50240	C	Partial removal of kidney
50280	C	Removal of kidney lesion
50290	C	Removal of kidney lesion
50300	C	Removal of donor kidney
50320	C	Removal of donor kidney
50340	C	Removal of kidney
50360	C	Transplantation of kidney
50365	C	Transplantation of kidney
50370	C	Remove transplanted kidney
50380	C	Reimplantation of kidney
50400	C	Revision of kidney/ureter
50405	C	Revision of kidney/ureter
50500	C	Repair of kidney wound
50520	C	Close kidney-skin fistula
50525	C	Repair renal-abdomen fistula
50526	C	Repair renal-abdomen fistula
50540	C	Revision of horseshoe kidney
*50545	C	Laparoscopic nephrectomy
50546	C	Laparoscopic nephrectomy
50547	C	Laparo removal donor kidney
50548	C	Laparo-asst remove k/ureter
50570	C	Kidney endoscopy
50572	C	Kidney endoscopy
50574	C	Kidney endoscopy & biopsy
50575	C	Kidney endoscopy
50576	C	Kidney endoscopy & treatment
50578	C	Renal endoscopy/radiotracer
50580	C	Kidney endoscopy & treatment
50600	C	Exploration of ureter
50605	C	Insert ureteral support
50610	C	Removal of ureter stone
50620	C	Removal of ureter stone
50630	C	Removal of ureter stone
50650	C	Removal of ureter
50660	C	Removal of ureter
50700	C	Revision of ureter
50715	C	Release of ureter
50722	C	Release of ureter
50725	C	Release/revise ureter
50727	C	Revise ureter
50728	C	Revise ureter
50740	C	Fusion of ureter & kidney
50750	C	Fusion of ureter & kidney
50760	C	Fusion of ureters
50770	C	Splicing of ureters

ADDENDUM E.—CPT CODES WHICH WILL BE PAID ONLY AS INPATIENT PROCEDURES—Continued

[Calendar Year 2001]

CPT/ HCPCS	HOPD status indicator	Description
50780	C	Reimplant ureter in bladder
50782	C	Reimplant ureter in bladder
50783	C	Reimplant ureter in bladder
50785	C	Reimplant ureter in bladder
50800	C	Implant ureter in bowel
50810	C	Fusion of ureter & bowel
50815	C	Urine shunt to bowel
50820	C	Construct bowel bladder
50825	C	Construct bowel bladder
50830	C	Revise urine flow
50840	C	Replace ureter by bowel
50845	C	Appendico-vesicostomy
50860	C	Transplant ureter to skin
50900	C	Repair of ureter
50920	C	Closure ureter/skin fistula
50930	C	Closure ureter/bowel fistula
50940	C	Release of ureter
51060	C	Removal of ureter stone
51525	C	Removal of bladder lesion
51530	C	Removal of bladder lesion
51535	C	Repair of ureter lesion
51550	C	Partial removal of bladder
51555	C	Partial removal of bladder
51565	C	Revise bladder & ureter(s)
51570	C	Removal of bladder
51575	C	Removal of bladder & nodes
51580	C	Remove bladder/revise tract
51585	C	Removal of bladder & nodes
51590	C	Remove bladder/revise tract
51595	C	Remove bladder/revise tract
51596	C	Remove bladder/create pouch
51597	C	Removal of pelvic structures
51800	C	Revision of bladder/urethra
51820	C	Revision of urinary tract
51840	C	Attach bladder/urethra
51841	C	Attach bladder/urethra
51845	C	Repair bladder neck
51860	C	Repair of bladder wound
51865	C	Repair of bladder wound
51900	C	Repair bladder/vagina lesion
51920	C	Close bladder-uterus fistula
51925	C	Hysterectomy/bladder repair
51940	C	Correction of bladder defect
51960	C	Revision of bladder & bowel
51980	C	Construct bladder opening
53085	C	Drainage of urinary leakage
53415	C	Reconstruction of urethra
53443	C	Reconstruction of urethra
54125	C	Removal of penis
54130	C	Remove penis & nodes
54135	C	Remove penis & nodes
54332	C	Revise penis/urethra
54336	C	Revise penis/urethra
54390	C	Repair penis and bladder
54430	C	Revision of penis
54535	C	Extensive testis surgery
54560	C	Exploration for testis
54650	C	Orchiopexy (Fowler-Stephens)
55600	C	Incise sperm duct pouch
55605	C	Incise sperm duct pouch
55650	C	Remove sperm duct pouch
55801	C	Removal of prostate
55810	C	Extensive prostate surgery
55812	C	Extensive prostate surgery
55815	C	Extensive prostate surgery
55821	C	Removal of prostate
55831	C	Removal of prostate
55840	C	Extensive prostate surgery
55842	C	Extensive prostate surgery
55845	C	Extensive prostate surgery
55862	C	Extensive prostate surgery

ADDENDUM E.—CPT CODES WHICH WILL BE PAID ONLY AS INPATIENT PROCEDURES—Continued

[Calendar Year 2001]

CPT/ HCPCS	HOPD status indicator	Description
55865	C	Extensive prostate surgery
56630	C	Extensive vulva surgery
56631	C	Extensive vulva surgery
56632	C	Extensive vulva surgery
56633	C	Extensive vulva surgery
56634	C	Extensive vulva surgery
56637	C	Extensive vulva surgery
56640	C	Extensive vulva surgery
57110	C	Remove vagina wall, complete
57111	C	Remove vagina tissue, compl
57112	C	Vaginectomy w/nodes, compl
57270	C	Repair of bowel pouch
57280	C	Suspension of vagina
57282	C	Repair of vaginal prolapse
57292	C	Construct vagina with graft
57305	C	Repair rectum-vagina fistula
57307	C	Fistula repair & colostomy
57308	C	Fistula repair, transperine
57311	C	Repair urethrovaginal lesion
57335	C	Repair vagina
57531	C	Removal of cervix, radical
57540	C	Removal of residual cervix
57545	C	Remove cervix/repair pelvis
58140	C	Removal of uterus lesion
58150	C	Total hysterectomy
58152	C	Total hysterectomy
58180	C	Partial hysterectomy
58200	C	Extensive hysterectomy
58210	C	Extensive hysterectomy
58240	C	Removal of pelvis contents
58260	C	Vaginal hysterectomy
58262	C	Vaginal hysterectomy
58263	C	Vaginal hysterectomy
58267	C	Hysterectomy & vagina repair
58270	C	Hysterectomy & vagina repair
58275	C	Hysterectomy/revise vagina
58280	C	Hysterectomy/revise vagina
58285	C	Extensive hysterectomy
58400	C	Suspension of uterus
58410	C	Suspension of uterus
58520	C	Repair of ruptured uterus
58540	C	Revision of uterus
58605	C	Division of fallopian tube
58611	C	Ligate oviduct(s) add-on
58700	C	Removal of fallopian tube
58720	C	Removal of ovary/tube(s)
58740	C	Revise fallopian tube(s)
58750	C	Repair oviduct
58752	C	Revise ovarian tube(s)
58760	C	Remove tubal obstruction
58770	C	Create new tubal opening
58805	C	Drainage of ovarian cyst(s)
58822	C	Drain ovary abscess, percut
58823	C	Drain pelvic abscess, percut
58825	C	Transposition, ovary(s)
58940	C	Removal of ovary(s)
58943	C	Removal of ovary(s)
58950	C	Resect ovarian malignancy
58951	C	Resect ovarian malignancy
58952	C	Resect ovarian malignancy
58960	C	Exploration of abdomen
59100	C	Remove uterus lesion
59120	C	Treat ectopic pregnancy
59121	C	Treat ectopic pregnancy
59130	C	Treat ectopic pregnancy
59135	C	Treat ectopic pregnancy
59136	C	Treat ectopic pregnancy
59140	C	Treat ectopic pregnancy
59325	C	Revision of cervix
59350	C	Repair of uterus
59514	C	Cesarean delivery only

CPT codes and descriptions only are copyright American Medical Association. All Rights Reserved. Applicable FARS/DFARS Apply.
Copyright American Dental Association. All rights reserved.

*Code is new in 2001.

ADDENDUM E.—CPT CODES WHICH WILL BE PAID ONLY AS INPATIENT PROCEDURES—Continued

[Calendar Year 2001]

CPT/ HCPCS	HOPD status indicator	Description
59525	C	Remove uterus after cesarean
59620	C	Attempted vbac delivery only
59830	C	Treat uterus infection
59850	C	Abortion
59851	C	Abortion
59852	C	Abortion
59855	C	Abortion
59856	C	Abortion
59857	C	Abortion
60254	C	Extensive thyroid surgery
60270	C	Removal of thyroid
60271	C	Removal of thyroid
60502	C	Re-explore parathyroids
60505	C	Explore parathyroid glands
60520	C	Removal of thymus gland
60521	C	Removal of thymus gland
60522	C	Removal of thymus gland
60540	C	Explore adrenal gland
60545	C	Explore adrenal gland
60600	C	Remove carotid body lesion
60605	C	Remove carotid body lesion
60650	C	Laparoscopy adrenalectomy
61105	C	Twist drill hole
61107	C	Drill skull for implantation
61108	C	Drill skull for drainage
61120	C	Burr hole for puncture
61140	C	Pierce skull for biopsy
61150	C	Pierce skull for drainage
61151	C	Pierce skull for drainage
61154	C	Pierce skull & remove clot
61156	C	Pierce skull for drainage
61210	C	Pierce skull, implant device
61250	C	Pierce skull & explore
61253	C	Pierce skull & explore
61304	C	Open skull for exploration
61305	C	Open skull for exploration
61312	C	Open skull for drainage
61313	C	Open skull for drainage
61314	C	Open skull for drainage
61315	C	Open skull for drainage
61320	C	Open skull for drainage
61321	C	Open skull for drainage
61332	C	Explore/biopsy eye socket
61333	C	Explore orbit/remove lesion
61334	C	Explore orbit/remove object
61340	C	Relieve cranial pressure
61343	C	Incise skull (press relief)
61345	C	Relieve cranial pressure
61440	C	Incise skull for surgery
61450	C	Incise skull for surgery
61458	C	Incise skull for brain wound
61460	C	Incise skull for surgery
61470	C	Incise skull for surgery
61480	C	Incise skull for surgery
61490	C	Incise skull for surgery
61500	C	Removal of skull lesion
61501	C	Remove infected skull bone
61510	C	Removal of brain lesion
61512	C	Remove brain lining lesion
61514	C	Removal of brain abscess
61516	C	Removal of brain lesion
61518	C	Removal of brain lesion
61519	C	Remove brain lining lesion
61520	C	Removal of brain lesion
61521	C	Removal of brain lesion
61522	C	Removal of brain abscess
61524	C	Removal of brain lesion
61526	C	Removal of brain lesion
61530	C	Removal of brain lesion
61531	C	Implant brain electrodes
61533	C	Implant brain electrodes

ADDENDUM E.—CPT CODES WHICH WILL BE PAID ONLY AS INPATIENT PROCEDURES—Continued

[Calendar Year 2001]

CPT/ HCPCS	HOPD status indicator	Description
61534	C	Removal of brain lesion
61535	C	Remove brain electrodes
61536	C	Removal of brain lesion
61538	C	Removal of brain tissue
61539	C	Removal of brain tissue
61541	C	Incision of brain tissue
61542	C	Removal of brain tissue
61543	C	Removal of brain tissue
61544	C	Remove & treat brain lesion
61545	C	Excision of brain tumor
61546	C	Removal of pituitary gland
61548	C	Removal of pituitary gland
61550	C	Release of skull seams
61552	C	Release of skull seams
61556	C	Incise skull/sutures
61557	C	Incise skull/sutures
61558	C	Excision of skull/sutures
61559	C	Excision of skull/sutures
61563	C	Excision of skull tumor
61564	C	Excision of skull tumor
61570	C	Remove foreign body, brain
61571	C	Incise skull for brain wound
61575	C	Skull base/brainstem surgery
61576	C	Skull base/brainstem surgery
61580	C	Craniofacial approach, skull
61581	C	Craniofacial approach, skull
61582	C	Craniofacial approach, skull
61583	C	Craniofacial approach, skull
61584	C	Orbitocranial approach/skull
61585	C	Orbitocranial approach/skull
61586	C	Resect nasopharynx, skull
61590	C	Infratemporal approach/skull
61591	C	Infratemporal approach/skull
61592	C	Orbitocranial approach/skull
61595	C	Transtemporal approach/skull
61596	C	Transcochlear approach/skull
61597	C	Transcondylar approach/skull
61598	C	Transpetrosal approach/skull
61600	C	Resect/excise cranial lesion
61601	C	Resect/excise cranial lesion
61605	C	Resect/excise cranial lesion
61606	C	Resect/excise cranial lesion
61607	C	Resect/excise cranial lesion
61608	C	Resect/excise cranial lesion
61609	C	Transect artery, sinus
61610	C	Transect artery, sinus
61611	C	Transect artery, sinus
61612	C	Transect artery, sinus
61613	C	Remove aneurysm, sinus
61615	C	Resect/excise lesion, skull
61616	C	Resect/excise lesion, skull
61618	C	Repair dura
61619	C	Repair dura
61624	C	Occlusion/embolization cath
61626	C	Occlusion/embolization cath
61680	C	Intracranial vessel surgery
61682	C	Intracranial vessel surgery
61684	C	Intracranial vessel surgery
61686	C	Intracranial vessel surgery
61690	C	Intracranial vessel surgery
61692	C	Intracranial vessel surgery
*61697	C	Intracranial aneurysm surgery
*61698	C	Intracranial aneurysm surgery
61700	C	Inner skull vessel surgery
61702	C	Inner skull vessel surgery
61703	C	Clamp neck artery
61705	C	Revise circulation to head
61708	C	Revise circulation to head
61710	C	Revise circulation to head
61711	C	Fusion of skull arteries
61720	C	Incise skull/brain surgery

ADDENDUM E.—CPT CODES WHICH WILL BE PAID ONLY AS INPATIENT PROCEDURES—Continued

[Calendar Year 2001]

CPT/ HCPCS	HOPD status indicator	Description
61735	C	Incise skull/brain surgery
61750	C	Incise skull/brain biopsy
61751	C	Brain biopsy w/ ct/mr guide
61760	C	Implant brain electrodes
61770	C	Incise skull for treatment
61791	C	Treat trigeminal tract
61850	C	Implant neuroelectrodes
61860	C	Implant neuroelectrodes
61862	C	Implant neurostimul, subcort
61870	C	Implant neuroelectrodes
61875	C	Implant neuroelectrodes
62000	C	Treat skull fracture
62005	C	Treat skull fracture
62010	C	Treatment of head injury
62100	C	Repair brain fluid leakage
62115	C	Reduction of skull defect
62116	C	Reduction of skull defect
62117	C	Reduction of skull defect
62120	C	Repair skull cavity lesion
62121	C	Incise skull repair
62140	C	Repair of skull defect
62141	C	Repair of skull defect
62142	C	Remove skull plate/flap
62143	C	Replace skull plate/flap
62145	C	Repair of skull & brain
62146	C	Repair of skull with graft
62147	C	Repair of skull with graft
62180	C	Establish brain cavity shunt
62190	C	Establish brain cavity shunt
62192	C	Establish brain cavity shunt
62200	C	Establish brain cavity shunt
62201	C	Establish brain cavity shunt
62220	C	Establish brain cavity shunt
62223	C	Establish brain cavity shunt
62256	C	Remove brain cavity shunt
62258	C	Replace brain cavity shunt
62351	C	Implant spinal canal cath
63001	C	Removal of spinal lamina
63003	C	Removal of spinal lamina
63005	C	Removal of spinal lamina
63011	C	Removal of spinal lamina
63012	C	Removal of spinal lamina
63015	C	Removal of spinal lamina
63016	C	Removal of spinal lamina
63017	C	Removal of spinal lamina
63020	C	Neck spine disk surgery
63030	C	Low back disk surgery
63035	C	Spinal disk surgery add-on
63040	C	Neck spine disk surgery
63042	C	Low back disk surgery
*63043	C	Repair of skull
*63044	C	Repair of skull
63045	C	Removal of spinal lamina
63046	C	Removal of spinal lamina
63047	C	Removal of spinal lamina
63048	C	Remove spinal lamina add-on
63055	C	Decompress spinal cord
63056	C	Decompress spinal cord
63057	C	Decompress spine cord add-on
63064	C	Decompress spinal cord
63066	C	Decompress spine cord add-on
63075	C	Neck spine disk surgery
63076	C	Neck spine disk surgery
63077	C	Spine disk surgery, thorax
63078	C	Spine disk surgery, thorax
63081	C	Removal of vertebral body
63082	C	Remove vertebral body add-on
63085	C	Removal of vertebral body

CPT codes and descriptions only are copyright American Medical Association. All Rights Reserved. Applicable FARS/DFARS Apply.
Copyright American Dental Association. All rights reserved.

*Code is new in 2001.

ADDENDUM E.—CPT CODES WHICH WILL BE PAID ONLY AS INPATIENT PROCEDURES—Continued

[Calendar Year 2001]

CPT/ HCPCS	HOPD status indicator	Description
63086	C	Remove vertebral body add-on
63087	C	Removal of vertebral body
63088	C	Remove vertebral body add-on
63090	C	Removal of vertebral body
63091	C	Remove vertebral body add-on
63170	C	Incise spinal cord tract(s)
63172	C	Drainage of spinal cyst
63173	C	Drainage of spinal cyst
63180	C	Revise spinal cord ligaments
63182	C	Revise spinal cord ligaments
63185	C	Incise spinal column/nerves
63190	C	Incise spinal column/nerves
63191	C	Incise spinal column/nerves
63194	C	Incise spinal column & cord
63195	C	Incise spinal column & cord
63196	C	Incise spinal column & cord
63197	C	Incise spinal column & cord
63198	C	Incise spinal column & cord
63199	C	Incise spinal column & cord
63200	C	Release of spinal cord
63250	C	Revise spinal cord vessels
63251	C	Revise spinal cord vessels
63252	C	Revise spinal cord vessels
63265	C	Excise intraspinal lesion
63266	C	Excise intraspinal lesion
63267	C	Excise intraspinal lesion
63268	C	Excise intraspinal lesion
63270	C	Excise intraspinal lesion
63271	C	Excise intraspinal lesion
63272	C	Excise intraspinal lesion
63273	C	Excise intraspinal lesion
63275	C	Biopsy/excise spinal tumor
63276	C	Biopsy/excise spinal tumor
63277	C	Biopsy/excise spinal tumor
63278	C	Biopsy/excise spinal tumor
63280	C	Biopsy/excise spinal tumor
63281	C	Biopsy/excise spinal tumor
63282	C	Biopsy/excise spinal tumor
63283	C	Biopsy/excise spinal tumor

ADDENDUM E.—CPT CODES WHICH WILL BE PAID ONLY AS INPATIENT PROCEDURES—Continued

[Calendar Year 2001]

CPT/ HCPCS	HOPD status indicator	Description
63285	C	Biopsy/excise spinal tumor
63286	C	Biopsy/excise spinal tumor
63287	C	Biopsy/excise spinal tumor
63290	C	Biopsy/excise spinal tumor
63300	C	Removal of vertebral body
63301	C	Removal of vertebral body
63302	C	Removal of vertebral body
63303	C	Removal of vertebral body
63304	C	Removal of vertebral body
63305	C	Removal of vertebral body
63306	C	Removal of vertebral body
63307	C	Removal of vertebral body
63308	C	Remove vertebral body add-on
63655	C	Implant neuroelectrodes
63700	C	Repair of spinal herniation
63702	C	Repair of spinal herniation
63704	C	Repair of spinal herniation
63706	C	Repair of spinal herniation
63707	C	Repair spinal fluid leakage
63709	C	Repair spinal fluid leakage
63710	C	Graft repair of spine defect
63740	C	Install spinal shunt
64752	C	Incision of vagus nerve
64755	C	Incision of stomach nerves
64760	C	Incision of vagus nerve
64763	C	Incise hip/thigh nerve
64766	C	Incise hip/thigh nerve
64802	C	Remove sympathetic nerves
64804	C	Remove sympathetic nerves
64809	C	Remove sympathetic nerves
64818	C	Remove sympathetic nerves
64820	C	Remove sympathetic nerves
64866	C	Fusion of facial/other nerve
64868	C	Fusion of facial/other nerve
65273	C	Repair of eye wound
69150	C	Extensive ear canal surgery
69155	C	Extensive ear/neck surgery
69502	C	Mastoidectomy
69535	C	Remove part of temporal bone
69554	C	Remove ear lesion
69950	C	Incise inner ear nerve

ADDENDUM E.—CPT CODES WHICH WILL BE PAID ONLY AS INPATIENT PROCEDURES—Continued

[Calendar Year 2001]

CPT/ HCPCS	HOPD status indicator	Description
69970	C	Remove inner ear lesion
75900	C	Arterial catheter exchange
*75952	C	Abdominal aortic aneurysm repair
*75953	C	Abdominal aortic aneurysm repair
92970	C	Cardioassist, internal
92971	C	Cardioassist, external
92975	C	Dissolve clot, heart vessel
92986	C	Revision of aortic valve
92987	C	Revision of mitral valve
92990	C	Revision of pulmonary valve
92992	C	Revision of heart chamber
92993	C	Revision of heart chamber
92997	C	Pul art balloon repr, percut
92998	C	Pul art balloon repr, percut
94652	C	Pressure breathing (IPPB)
99190	C	Special pump services
99191	C	Special pump services
99192	C	Special pump services
99251	C	Initial inpatient consult
99252	C	Initial inpatient consult
99253	C	Initial inpatient consult
99254	C	Initial inpatient consult
99255	C	Initial inpatient consult
99261	C	Follow-up inpatient consult
99262	C	Follow-up inpatient consult
99263	C	Follow-up inpatient consult
99295	C	Neonatal critical care
99296	C	Neonatal critical care
99297	C	Neonatal critical care
99298	C	Neonatal critical care
99356	C	Prolonged service, inpatient
99357	C	Prolonged service, inpatient
99433	C	Normal newborn care/hospital

CPT codes and descriptions only are copyright American Medical Association. All Rights Reserved. Applicable FARS/DFARS Apply.

Copyright American Dental Association. All rights reserved.

*Code is new in 2001.

ADDENDUM F—WAGE INDEX FOR URBAN AREAS

Urban Area (Constituent Counties)	Wage Index
0040 Abilene, −+*	0.8240
Taylor, TX	
0060 Aguadilla, PR	0.4391
Aguada, PR	
Aguadilla, PR	
Moca, PR	
0080 Akron, OH	0.9736
Portage, OH	
Summit, OH	
0120 Albany, GA	0.9933
Dougherty, GA	
Lee, GA	
0160 Albany-Schenectady-Troy, NY	0.8549
Albany, NY	
Montgomery, NY	
Rensselaer, NY	
Saratoga, NY	
Schenectady, NY	
Schoharie, NY	
0200 Albuquerque, NM	0.9136
Bernalillo, NM	
Sandoval, NM	
Valencia, NM	
0220 Alexandria, LA	0.8170
Rapides, LA	

ADDENDUM F—WAGE INDEX FOR URBAN AREAS—Continued

Urban Area (Constituent Counties)	Wage Index
0240 Allentown-Bethlehem-Easton, PA	0.9925
Carbon, PA	
Lehigh, PA	
Northampton, PA	
0280 Altoona, PA	0.9346
Blair, PA	
0320 Amarillo, TX Potter, TX	0.8715
Randall, TX	
0380 Anchorage, AK	1.2865
Anchorage, AK	
0440 Ann Arbor, MI	1.1254
Lenawee, MI	
Livingston, MI	
Washtenaw, MI	
0450 Anniston, AL	0.8284
Calhoun, AL	
0460 Appleton-Oshkosh-Neenah, WI	0.9052
Calumet, WI	
Outagamie, WI	
Winnebago, WI	
0470 Arecibo, PR	0.4525
Arecibo, PR	
Camuy, PR	
Hatillo, PR	
0480 Asheville, NC	0.9516
Buncombe, NC	
Madison, NC	

ADDENDUM F—WAGE INDEX FOR URBAN AREAS—Continued

Urban Area (Constituent Counties)	Wage Index
0500 Athens, GA	0.9739
Clarke, GA	
Madison, GA	
Oconee, GA	
0520 Atlanta, GA[1]	1.0096
Barrow, GA	
Bartow, GA	
Carroll, GA	
Cherokee, GA	
Clayton, GA	
Cobb, GA	
Coweta, GA	
DeKalb, GA	
Douglas, GA	
Fayette, GA	
Forsyth, GA	
Fulton, GA	
Gwinnett, GA	
Henry, GA	
Newton, GA	
Paulding, GA	
Pickens, GA	
Rockdale, GA	
Spalding, GA	
Walton, GA	
0560 Atlantic-Cape May, NJ	1.1182
Atlantic, NJ	

ADDENDUM F—WAGE INDEX FOR URBAN AREAS—Continued

Urban Area (Constituent Counties)	Wage Index
Cape May, NJ	
0580 Auburn-Opelika, AL	0.8106
Lee, AL	
0600 Augusta-Aiken, GA–SC	0.9160
Columbia, GA	
McDuffie, GA	
Richmond, GA	
Aiken, SC	
Edgefield, SC	
0640 Austin-San Marcos, TX [1]	0.9577
Bastrop, TX	
Caldwell, TX	
Hays, TX	
Travis, TX	
Williamson, TX	
0680 Bakersfield, CA [2]	0.9861
Kern, CA	
0720 Baltimore, MD [1]	0.9365
Anne Arundel, MD	
Baltimore County, MD	
Baltimore City, MD	
Carroll, MD	
Harford, MD	
Howard, MD	
Queen Anne's, MD	
0733 Bangor, ME	0.9561
Penobscot, ME	
0743 Barnstable-Yarmouth, MA	1.3839
Barnstable, MA	
0760 Baton Rouge, LA	0.8842
Ascension, LA	
East Baton Rouge, LA	
Livingston, LA	
West Baton Rouge, LA	
0840 Beaumont-Port Arthur, TX	0.8744
Hardin, TX	
Jefferson, TX	
Orange, TX	
0860 Bellingham, WA	1.1439
Whatcom, WA	
0870 Benton Harbor, MI [2]	0.9021
Berrien, MI	
0875 Bergen-Passaic, NJ [1]	1.1605
Bergen, NJ	
Passaic, NJ	
0880 Billings, MT	0.9591
Yellowstone, MT	
0920 Biloxi-Gulfport-Pascagoula, MS	0.8236
Hancock, MS	
Harrison, MS	
Jackson, MS	
0960 Binghamton, NY	0.8690
Broome, NY	
Tioga, NY	
1000 Birmingham, AL	0.8477
Blount, AL	
Jefferson, AL	
St. Clair, AL	
Shelby, AL	
1010 Bismarck, ND	0.7897
Burleigh, ND	
Morton, ND	
1020 Bloomington, IN	0.8733
Monroe, IN	
1040 Bloomington-Normal, IL	0.9156
McLean, IL	
1080 Boise City, ID	0.9042
Ada, ID	
Canyon, ID	
1123 Boston-Worcester-Lawrence-Lowell-Brockton, MA–NH (MA Hospitals) [1, 2]	1.1204
Bristol, MA	
Essex, MA	
Middlesex, MA	
Norfolk, MA	
Plymouth, MA	
Suffolk, MA	
Worcester, MA	
Hillsborough, NH	
Merrimack, NH	
Rockingham, NH	
Strafford, NH	
1123 Boston-Worcester-Lawrence-Lowell-Brockton, MA–NH (NH Hospitals) [1]	1.1160
Bristol, MA	
Essex, MA	
Middlesex, MA	
Norfolk, MA	
Plymouth, MA	
Suffolk, MA	
Worcester, MA	
Hillsborough, NH	
Merrimack, NH	
Rockingham, NH	
Strafford, NH	
1125 Boulder-Longmont, CO	0.9731
Boulder, CO	
1145 Brazoria, TX	0.8658
Brazoria, TX	
1150 Bremerton, WA	1.0975
Kitsap, WA	
1240 Brownsville-Harlingen-San Benito, TX	0.8722
Cameron, TX	
1260 Bryan-College Station, TX	0.8237
Brazos, TX	
1280 Buffalo-Niagara Falls, NY [1]	0.9580
Erie, NY	
Niagara, NY	
1303 Burlington, VT	1.0735
Chittenden, VT	
Franklin, VT	
Grand Isle, VT	
1310 Caguas, PR	0.4562
Caguas, PR	
Cayey, PR	
Cidra, PR	
Gurabo, PR	
San Lorenzo, PR	
1320 Canton-Massillon, OH [2]	0.8670
Carroll, OH	
Stark, OH	
1350 Casper, WY [2]	0.8817
Natrona, WY	
1360 Cedar Rapids, IA	0.8736
Linn, IA	
1400 Champaign-Urbana, IL	0.9198
Champaign, IL	
1440 Charleston-North Charleston, SC	0.9067
Berkeley, SC	
Charleston, SC	
Dorchester, SC	
1480 Charleston, WV	0.9240
Kanawha, WV	
Putnam, WV	
1520 Charlotte-Gastonia-Rock Hill, NC–SC [1]	0.9391
Cabarrus, NC	
Gaston, NC	
Lincoln, NC	
Mecklenburg, NC	
Rowan, NC	
Stanly, NC	
Union, NC	
York, SC	
1540 Charlottesville, VA	1.0789
Albemarle, VA	
Charlottesville City, VA	
Fluvanna, VA	
Greene, VA	
1560 Chattanooga, TN–GA	0.9833
Catoosa, GA	
Dade, GA	
Walker, GA	
Hamilton, TN	
Marion, TN	
1580 Cheyenne, WY [2]	0.8817
Laramie, WY	
1600 Chicago, IL [1]	1.1146
Cook, IL	
DeKalb, IL	
DuPage, IL	
Grundy, IL	
Kane, IL	
Kendall, IL	
Lake, IL	
McHenry, IL	
Will, IL	
1620 Chico-Paradise, CA	0.9918
Butte, CA	
1640 Cincinnati, OH–KY–IN [1]	0.9415
Dearborn, IN	
Ohio, IN	
Boone, KY	
Campbell, KY	
Gallatin, KY	
Grant, KY	
Kenton, KY	
Pendleton, KY	
Brown, OH	
Clermont, OH	
Hamilton, OH	
Warren, OH	
1660 Clarksville-Hopkinsville, TN–KY	0.8277
Christian, KY	
Montgomery, TN	
1680 Cleveland-Lorain-Elyria, OH [1]	0.9593
Ashtabula, OH	
Cuyahoga, OH	
Geauga, OH	
Lake, OH	
Lorain, OH	
Medina, OH	
1720 Colorado Springs, CO	0.9697
El Paso, CO	
1740 Columbia, MO	0.8961
Boone, MO	
1760 Columbia, SC	0.9554
Lexington, SC	
Richland, SC	
1800 Columbus, GA–AL Russell, AL	0.8568
Chattahoochee, GA	
Harris, GA	
Muscogee, GA	
1840 Columbus, OH [1]	0.9619
Delaware, OH	
Fairfield, OH	
Franklin, OH	
Licking, OH	
Madison, OH	
Pickaway, OH	
1880 Corpus Christi, TX	0.8726
Nueces, TX	
San Patricio, TX	
1890 Corvallis, OR	1.1326
Benton, OR	
1900 Cumberland, MD–WV (MD Hospitals) [2]	0.8651
Allegany, MD	
Mineral, WV	
1900 Cumberland, MD–WV (WV Hospital)	0.8369
Allegany, MD	
Mineral, WV	
1920 Dallas, TX [1]	0.9913
Collin, TX	
Dallas, TX	
Denton, TX	
Ellis, TX	
Henderson, TX	
Hunt, TX	
Kaufman, TX	
Rockwall, TX	
1950 Danville, VA	0.8589
Danville City, VA	
Pittsylvania, VA	
1960 Davenport-Moline-Rock Island, IA–IL	0.8898

ADDENDUM F—WAGE INDEX FOR URBAN AREAS—Continued

Urban Area (Constituent Counties)	Wage Index
Scott, IA	
Henry, IL	
Rock Island, IL	
2000 Dayton-Springfield, OH	0.9442
Clark, OH	
Greene, OH	
Miami, OH	
Montgomery, OH	
2020 Daytona Beach, FL	0.9147
Flagler, FL	
Volusia, FL	
2030 Decatur, AL	0.8534
Lawrence, AL	
Morgan, AL	
2040 Decatur, IL [2]	0.8160
Macon, IL	
2080 Denver, CO [1]	1.0181
Adams, CO	
Arapahoe, CO	
Denver, CO	
Douglas, CO	
Jefferson, CO	
2120 Des Moines, IA	0.9118
Dallas, IA	
Polk, IA	
Warren, IA	
2160 Detroit, MI [1]	1.0510
Lapeer, MI	
Macomb, MI	
Monroe, MI	
Oakland, MI	
St. Clair, MI	
Wayne, MI	
2180 Dothan, AL	0.8013
Dale, AL	
Houston, AL	
2190 Dover, DE	1.0078
Kent, DE	
2200 Dubuque, IA	0.8746
Dubuque, IA	
2240 Duluth-Superior, MN–WI	1.0043
St. Louis, MN	
Douglas, WI	
2281 Dutchess County, NY	0.9491
Dutchess, NY	
2290 Eau Claire, WI [2]	0.8880
Chippewa, WI	
Eau Claire, WI	
2320 El Paso, TX	0.9346
El Paso, TX	
2330 Elkhart-Goshen, IN	0.9145
Elkhart, IN	
2335 Elmira, NY	0.8546
Chemung, NY	
2340 Enid, OK	0.8610
Garfield, OK	
2360 Erie, PA	0.8985
Erie, PA	
2400 Eugene-Springfield, OR	1.0965
Lane, OR	
2440 Evansville-Henderson, IN–KY (IN Hospitals) [2]	0.8602
Posey, IN	
Vanderburgh, IN	
Warrick, IN	
Henderson, KY	
2440 Evansville-Henderson, IN–KY (KY Hospitals)	0.8173
Posey, IN	
Vanderburgh, IN	
Warrick, IN	
Henderson, KY	
2520 Fargo-Moorhead, ND–MN	0.8749
Clay, MN	
Cass, ND	
2560 Fayetteville, NC	0.8655
Cumberland, NC	
2580 Fayetteville-Springdale-Rogers, AR	0.7910
Benton, AR	
Washington, AR	
2620 Flagstaff, AZ–UT	1.0686
Coconino, AZ	
Kane, UT	
2640 Flint, MI	1.1205
Genesee, MI	
2650 Florence, AL	0.7652
Colbert, AL	
Lauderdale, AL	
2655 Florence, SC	0.8777
Florence, SC	
2670 Fort Collins-Loveland, CO	1.0647
Larimer, CO	
2680 [1] Ft. Lauderdale, FL	1.0152
Broward, FL	
2700 Fort Myers-Cape Coral, FL	0.9247
Lee, FL	
2710 Fort Pierce-Port St. Lucie, FL	0.9622
Martin, FL	
St. Lucie, FL	
2720 Fort Smith, AR–OK	0.8052
Crawford, AR	
Sebastian, AR	
Sequoyah, OK	
2750 Fort Walton Beach, FL	0.9607
Okaloosa, FL	
2760 Fort Wayne, IN	0.8665
Adams, IN	
Allen, IN	
De Kalb, IN	
Huntington, IN	
Wells, IN	
Whitley, IN	
2800 Forth Worth-Arlington, TX [1]	0.9527
Hood, TX	
Johnson, TX	
Parker, TX	
Tarrant, TX	
2840 Fresno, CA	1.0104
Fresno, CA	
Madera, CA	
2880 Gadsden, AL	0.8423
Etowah, AL	
2900 Gainesville, FL	1.0074
Alachua, FL	
2920 Galveston-Texas City, TX	0.9918
Galveston, TX	
2960 Gary, IN	0.9454
Lake, IN	
Porter, IN	
2975 Glens Falls, NY [2]	0.8499
Warren, NY	
Washington, NY	
2980 Goldsboro, NC [2]	0.8441
Wayne, NC	
2985 Grand Forks, ND–MN	0.8954
Polk, MN	
Grand Forks, ND	
2995 Grand Junction, CO	0.9471
Mesa, CO	
3000 Grand Rapids-Muskegon-Holland, MI [1]	1.0248
Allegan, MI	
Kent, MI	
Muskegon, MI	
Ottawa, MI	
3040 Great Falls, MT	0.9330
Cascade, MT	
3060 Greeley, CO	0.9814
Weld, CO	
3080 Green Bay, WI	0.9308
Brown, WI	
3120 Greensboro-Winston-Salem-High Point, NC [1]	0.9124
Alamance, NC	
Davidson, NC	
Davie, NC	
Forsyth, NC Guilford, NC	
Randolph, NC	
Stokes, NC	
Yadkin, NC	
3150 Greenville, NC	0.9384
Pitt, NC	
3160 Greenville-Spartanburg-Anderson, SC	0.9003
Anderson, SC	
Cherokee, SC	
Greenville, SC	
Pickens, SC	
Spartanburg, SC	
3180 Hagerstown, MD	0.9409
Washington, MD	
3200 Hamilton-Middletown, OH	0.9061
Butler, OH	
3240 Harrisburg-Lebanon-Carlisle, PA	0.9386
Cumberland, PA	
Dauphin, PA	
Lebanon, PA	
Perry, PA	
3283 Hartford, CT [1, 2]	1.1715
Hartford, CT	
Litchfield, CT	
Middlesex, CT	
Tolland, CT	
3285 Hattiesburg, MS [2]	0.7491
Forrest, MS	
Lamar, MS	
3290 Hickory-Morganton-Lenoir, NC	0.8755
Alexander, NC	
Burke, NC	
Caldwell, NC	
Catawba, NC	
3320 Honolulu, HI	1.1866
Honolulu, HI	
3350 Houma, LA	0.8086
Lafourche, LA	
Terrebonne, LA	
3360 Houston, TX [1]	0.9732
Chambers, TX	
Fort Bend, TX	
Harris, TX	
Liberty, TX	
Montgomery, TX	
Waller, TX	
3400 Huntington-Ashland, WV–KY–OH	0.9876
Boyd, KY	
Carter, KY	
Greenup, KY	
Lawrence, OH	
Cabell, WV	
Wayne, WV	
3440 Huntsville, AL	0.8932
Limestone, AL	
Madison, AL	
3480 Indianapolis, IN [1]	0.9787
Boone, IN	
Hamilton, IN	
Hancock, IN	
Hendricks, IN	
Johnson, IN	
Madison, IN	
Marion, IN	
Morgan, IN	
Shelby, IN	
3500 Iowa City, IA	0.9657
Johnson, IA	
3520 Jackson, MI	0.9134
Jackson, MI	
3560 Jackson, MS	0.8812
Hinds, MS	
Madison, MS	
Rankin, MS	
3580 Jackson, TN	0.8796
Madison, TN	
Chester, TN	
3600 Jacksonville, FL [1]	0.9208
Clay, FL	
Duval, FL	

ADDENDUM F—WAGE INDEX FOR URBAN AREAS—Continued

Urban Area (Constituent Counties)	Wage Index
Nassau, FL	
St. Johns, FL	
3605 Jacksonville, NC [2]	0.8441
Onslow, NC	
3610 Jamestown, NY [2]	0.8499
Chautauqua, NY	
3620 Janesville-Beloit, WI	0.9585
Rock, WI	
3640 Jersey City, NJ	1.1573
Hudson, NJ	
3660 Johnson City-Kingsport-Bristol, TN–VA	0.8328
Carter, TN	
Hawkins, TN	
Sullivan, TN	
Unicoi, TN	
Washington, TN	
Bristol City, VA	
Scott, VA	
Washington, VA	
3680 Johnstown, PA	0.8578
Cambria, PA	
Somerset, PA	
3700 Jonesboro, AR	0.7832
Craighead, AR	
3710 Joplin, MO	0.8148
Jasper, MO	
Newton, MO	
3720 Kalamazoo-Battlecreek, MI	1.0453
Calhoun, MI	
Kalamazoo, MI	
Van Buren, MI	
3740 Kankakee, IL	0.9902
Kankakee, IL	
3760 Kansas City, KS–MO [1]	0.9661
Johnson, KS	
Leavenworth, KS	
Miami, KS	
Wyandotte, KS	
Cass, MO	
Clay, MO	
Clinton, MO	
Jackson, MO	
Lafayette, MO	
Platte, MO	
Ray, MO	
3800 Kenosha, WI	0.9611
Kenosha, WI	
3810 Killeen-Temple, TX	1.0119
Bell, TX	
Coryell, TX	
3840 Knoxville, TN	0.8340
Anderson, TN	
Blount, TN	
Knox, TN	
Loudon, TN	
Sevier, TN	
Union, TN	
3850 Kokomo, IN	0.9525
Howard, IN	
Tipton, IN	
3870 La Crosse, WI–MN	0.9211
Houston, MN	
La Crosse, WI	
3880 Lafayette, LA	0.8490
Acadia, LA	
Lafayette, LA	
St. Landry, LA	
St. Martin, LA	
3920 Lafayette, IN	0.8834
Clinton, IN	
Tippecanoe, IN	
3960 Lake Charles, LA [2]	0.7713
Calcasieu, LA	
3980 Lakeland-Winter Haven, FL	0.8928
Polk, FL	
4000 Lancaster, PA	0.9259
Lancaster, PA	
4040 Lansing-East Lansing, MI	0.9934
Clinton, MI	
Eaton, MI	
Ingham, MI	
4080 Laredo, TX	0.8168
Webb, TX	
4100 Las Cruces, NM	0.8658
Dona Ana, NM	
4120 Las Vegas, NV–AZ [1]	1.0796
Mohave, AZ	
Clark, NV	
Nye, NV	
4150 Lawrence, KS	0.8190
Douglas, KS	
4200 Lawton, OK	0.8996
Comanche, OK	
4243 Lewiston-Auburn, ME	0.9036
Androscoggin, ME	
4280 Lexington, KY	0.8866
Bourbon, KY	
Clark, KY	
Fayette, KY	
Jessamine, KY	
Madison, KY	
Scott, KY	
Woodford, KY	
4320 Lima, OH	0.9320
Allen, OH	
Auglaize, OH	
4360 Lincoln, NE	0.9666
Lancaster, NE	
4400 Little Rock-North Little Rock, AR	0.8906
Faulkner, AR	
Lonoke, AR	
Pulaski, AR	
Saline, AR	
4420 Longview-Marshall, TX	0.8922
Gregg, TX	
Harrison, TX	
Upshur, TX	
4480 Los Angeles-Long Beach, CA [1]	1.2033
Los Angeles, CA	
4520 Louisville, KY–IN	0.9350
Clark, IN	
Floyd, IN	
Harrison, IN	
Scott, IN	
Bullitt, KY	
Jefferson, KY	
Oldham, KY	
4600 Lubbock, TX	0.8838
Lubbock, TX	
4640 Lynchburg, VA	0.8867
Amherst, VA	
Bedford, VA	
Bedford City, VA	
Campbell, VA	
Lynchburg City, VA	
4680 Macon, GA	0.8974
Bibb, GA	
Houston, GA	
Jones, GA	
Peach, GA	
Twiggs, GA	
4720 Madison, WI	1.0271
Dane, WI	
4800 Mansfield, OH	0.8690
Crawford, OH	
Richland, OH	
4840 Mayaguez, PR	0.4589
Anasco, PR	
Cabo Rojo, PR	
Hormigueros, PR	
Mayaguez, PR	
Sabana Grande, PR	
San German, PR	
4880 McAllen-Edinburg-Mission, TX	0.8566
Hidalgo, TX	
4890 Medford-Ashland, OR	1.0344
Jackson, OR	
4900 Melbourne-Titusville-Palm Bay, FL	0.9688
Brevard, Fl	
4920 Memphis, TN–AR–MS [1]	0.8723
Crittenden, AR	
DeSoto, MS	
Fayette, TN	
Shelby, TN	
Tipton, TN	
4940 Merced, CA [2]	0.9861
Merced, CA	
5000 Miami, FL [1]	1.0059
Dade, FL	
5015 Middlesex-Somerset-Hunterdon, NJ [1]	1.0333
Hunterdon, NJ	
Middlesex, NJ	
Somerset, NJ	
5080 Milwaukee-Waukesha, WI [1]	0.9767
Milwaukee, WI	
Ozaukee, WI	
Washington, WI	
Waukesha, WI	
5120 Minneapolis-St. Paul, MN–WI [1]	1.1017
Anoka, MN	
Carver, MN	
Chisago, MN	
Dakota, MN	
Hennepin, MN	
Isanti, MN	
Ramsey, MN	
Scott, MN	
Sherburne, MN	
Washington, MN	
Wright, MN	
Pierce, WI	
St. Croix, WI	
5140 Missoula, MT	0.9332
Missoula, MT	
5160 Mobile, AL	0.8163
Baldwin, AL	
Mobile, AL	
5170 Modesto, CA	1.0396
Stanislaus, CA	
5190 Monmouth-Ocean, NJ [1]	1.1283
Monmouth, NJ	
Ocean, NJ	
5200 Monroe, LA	0.8396
Ouachita, LA	
5240 Montgomery, AL	0.7653
Autauga, AL	
Elmore, AL	
Montgomery, AL	
5280 Muncie, IN	1.0969
Delaware, IN	
5330 Myrtle Beach, SC	0.8440
Horry, SC	
5345 Naples, FL	0.9661
Collier, FL	
5360 Nashville, TN [1]	0.9490
Cheatham, TN	
Davidson, TN	
Dickson, TN	
Robertson, TN	
Rutherford, TN	
Sumner, TN	
Williamson, TN	
Wilson, TN	
5380 Nassau-Suffolk, NY [1]	1.3932
Nassau, NY	
Suffolk, NY	
5483 New Haven-Bridgeport-Stamford-Waterbury-Danbury, CT [1]	1.2034
Fairfield, CT	
New Haven, CT	
5523 New London-Norwich, CT	1.2063
New London, CT	
5560 New Orleans, LA [1]	0.9295
Jefferson, LA	
Orleans, LA	

ADDENDUM F—WAGE INDEX FOR URBAN AREAS—Continued

Urban Area (Constituent Counties)	Wage Index
Plaquemines, LA	
St. Bernard, LA	
St. Charles, LA	
St. James, LA	
St. John The Baptist, LA	
St. Tammany, LA	
5600 New York, NY [1]	1.4651
Bronx, NY	
Kings, NY	
New York, NY	
Putnam, NY	
Queens, NY	
Richmond, NY	
Rockland, NY	
Westchester, NY	
5640 Newark, NJ [1]	1.0757
Essex, NJ	
Morris, NJ	
Sussex, NJ	
Union, NJ	
Warren, NJ	
5660 Newburgh, NY–PA	1.0847
Orange, NY	
Pike, PA	
5720 Norfolk-Virginia Beach-Newport News, VA-NC [1]	0.8422
Currituck, NC	
Chesapeake City, VA	
Gloucester, VA	
Hampton City, VA	
Isle of Wight, VA	
James City, VA	
Mathews, VA	
Newport News City, VA	
Norfolk City, VA	
Poquoson City, VA	
Portsmouth City, VA	
Suffolk City, VA	
Virginia Beach City VA	
Williamsburg City, VA	
York, VA	
5775 Oakland, CA [1]	1.4983
Alameda, CA	
Contra Costa, CA	
5790 Ocala, FL	0.9243
Marion, FL	
5800 Odessa-Midland, TX	0.9205
Ector, TX	
Midland, TX	
5880 Oklahoma City, OK [1]	0.8822
Canadian, OK	
Cleveland, OK	
Logan, OK	
McClain, OK	
Oklahoma, OK	
Pottawatomie, OK	
5910 Olympia, WA	1.0677
Thurston, WA	
5920 Omaha, NE–IA	0.9572
Pottawattamie, IA	
Cass, NE	
Douglas, NE	
Sarpy, NE	
Washington, NE	
5945 Orange County, CA [1]	1.1411
Orange, CA	
5960 Orlando, FL [1]	0.9610
Lake, FL	
Orange, FL	
Osceola, FL	
Seminole, FL	
5990 Owensboro, KY	0.8159
Daviess, KY	
6015 Panama City, FL	0.9010
Bay, FL	
6020 Parkersburg-Marietta, WV-OH (WV Hospitals)	0.8274
Washington, OH	
Wood, WV	

ADDENDUM F—WAGE INDEX FOR URBAN AREAS—Continued

Urban Area (Constituent Counties)	Wage Index
6020 Parkersburg-Marietta, WV-OH (OH Hospitals) [2]	0.8670
Washington, OH	
Wood, WV	
6080 Pensacola, FL [2]	0.8928
Escambia, FL	
Santa Rosa, FL	
6120 Peoria-Pekin, IL	0.8646
Peoria, IL	
Tazewell, IL	
Woodford, IL	
6160 Philadelphia, PA–NJ [1]	1.0937
Burlington, NJ	
Camden, NJ	
Gloucester, NJ	
Salem, NJ	
Bucks, PA	
Chester, PA	
Delaware, PA	
Montgomery, PA	
Philadelphia, PA	
6200 Phoenix-Mesa, AZ [1]	0.9669
Maricopa, AZ	
Pinal, AZ	
6240 Pine Bluff, AR	0.7791
Jefferson, AR	
6280 Pittsburgh, PA [1]	0.9741
Allegheny, PA	
Beaver, PA	
Butler, PA	
Fayette, PA	
Washington, PA	
Westmoreland, PA	
6323 Pittsfield, MA [2]	1.1204
Berkshire, MA	
6340 Pocatello, ID	0.9076
Bannock, ID	
6360 Ponce, PR	0.5006
Guayanilla, PR	
Juana Diaz, PR	
Penuelas, PR	
Ponce, PR	
Villalba, PR	
Yauco, PR	
6403 Portland, ME	0.9748
Cumberland, ME	
Sagadahoc, ME	
York, ME	
6440 Portland-Vancouver, [1] OR-WA	1.0910
Clackamas, OR	
Columbia, OR	
Multnomah, OR	
Washington, OR	
Yamhill, OR	
Clark, WA	
6483 Providence-Warwick-Pawtucket, RI [1]	1.0864
Bristol, RI	
Kent, RI	
Newport, RI	
Providence, RI	
Washington, RI	
6520 Provo-Orem, UT	1.0041
Utah, UT	
6560 Pueblo, CO [2]	0.8968
Pueblo, CO	
6580 Punta Gorda, FL	0.9613
Charlotte, FL	
6600 Racine, WI	0.9246
Racine, WI	
6640 Raleigh-Durham-Chapel Hill, NC [1]	0.9646
Chatham, NC	
Durham, NC	
Franklin, NC	
Johnston, NC	
Orange, NC	
Wake, NC	
6660 Rapid City, SD	0.8865
Pennington, SD	
6680 Reading, PA	0.9152

ADDENDUM F—WAGE INDEX FOR URBAN AREAS—Continued

Urban Area (Constituent Counties)	Wage Index
Berks, PA	
690 Redding, CA	1.1664
Shasta, CA	
6720 Reno, NV	1.0550
Washoe, NV	
6740 Richland-Kennewick-Pasco, WA	1.1460
Benton, WA	
Franklin, WA	
6760 Richmond-Petersburg, VA	0.9617
Charles City County, VA	
Chesterfield, VA	
Colonial Heights City, VA	
Dinwiddie, VA	
Goochland, VA	
Hanover, VA	
Henrico, VA	
Hopewell City, VA	
New Kent, VA	
Petersburg City, VA	
Powhatan, VA	
Prince George, VA	
Richmond City, VA	
6780 Riverside-San Bernardino, CA [1]	1.1115
Riverside, CA	
San Bernardino, CA	
6800 Roanoke, VA	0.8782
Botetourt, VA	
Roanoke, VA	
Roanoke City, VA	
Salem City, VA	
6820 Rochester, MN	1.1315
Olmsted, MN	
6840 Rochester, NY [1]	0.9182
Genesee, NY	
Livingston, NY	
Monroe, NY	
Ontario, NY	
Orleans, NY	
Wayne, NY	
6880 Rockford, IL	0.8819
Boone, IL	
Ogle, IL	
Winnebago, IL	
6895 Rocky Mount, NC	0.8849
Edgecombe, NC	
Nash, NC	
6920 Sacramento, CA [1]	1.1957
El Dorado, CA	
Placer, CA	
Sacramento, CA	
6960 Saginaw-Bay City-Midland, MI	0.9575
Bay, MI	
Midland, MI	
Saginaw, MI	
6980 St. Cloud, MN	1.0016
Benton, MN	
Stearns, MN	
7000 St. Joseph, MO	0.9071
Andrew, MO	
Buchanan, MO	
7040 St. Louis, MO–IL [1]	0.9049
Clinton, IL	
Jersey, IL	
Madison, IL	
Monroe, IL	
St. Clair, IL	
Franklin, MO	
Jefferson, MO	
Lincoln, MO	
St. Charles, MO	
St. Louis, MO	
St. Louis City, MO	
Warren, MO	
7080 Salem, OR	1.0132
Marion, OR	
Polk, OR	
7120 Salinas, CA	1.4502
Monterey, CA	
7160 Salt Lake City-Ogden, UT [1]	0.9811

ADDENDUM F—WAGE INDEX FOR URBAN AREAS—Continued

Urban Area (Constituent Counties)	Wage Index
Davis, UT	
Salt Lake, UT	
Weber, UT	
7200 San Angelo, TX	0.8083
Tom Green, TX	
7240 San Antonio, TX [1]	0.8580
Bexar, TX	
Comal, TX	
Guadalupe, TX	
Wilson, TX	
7320 San Diego, CA [1]	1.1784
San Diego, CA	
7360 San Francisco, CA [1]	1.4193
Marin, CA	
San Francisco, CA	
San Mateo, CA	
7400 San Jose, CA [1]	1.3564
Santa Clara, CA	
7440 San Juan-Bayamon, PR [1]	0.4690
Aguas Buenas, PR	
Barceloneta, PR	
Bayamon, PR	
Canovanas, PR	
Carolina, PR	
Catano, PR	
Ceiba, PR	
Comerio, PR	
Corozal, PR	
Dorado, PR	
Fajardo, PR	
Florida, PR	
Guaynabo, PR	
Humacao, PR	
Juncos, PR	
Los Piedras, PR	
Loiza, PR	
Luguillo, PR	
Manati, PR	
Morovis, PR	
Naguabo, PR	
Naranjito, PR	
Rio Grande, PR	
San Juan, PR	
Toa Alta, PR	
Toa Baja, PR	
Trujillo Alto, PR	
Vega Alta, PR	
Vega Baja, PR	
Yabucoa, PR	
7460 San Luis Obispo-Atascadero-Paso Robles, CA	1.0673
San Luis Obispo, CA	
7480 Santa Barbara-Santa Maria-Lompoc, CA	1.0597
Santa Barbara, CA	
7485 Santa Cruz-Watsonville, CA	1.4095
Santa Cruz, CA	
7490 Santa Fe, NM	1.0537
Los Alamos, NM	
Santa Fe, NM	
7500 Santa Rosa, CA	1.2646
Sonoma, CA	
7510 Sarasota-Bradenton, FL	0.9809
Manatee, FL	
Sarasota, FL	
7520 Savannah, GA	0.9697
Bryan, GA	
Chatham, GA	
Effingham, GA	
7560 Scranton-Wilkes-Barre-Hazleton, PA [2]	0.8578
Columbia, PA	
Lackawanna, PA	
Luzerne, PA	
Wyoming, PA	
7600 Seattle-Bellevue-Everett, WA [1]	1.1016
Island, WA	
King, WA	
Snohomish, WA	

ADDENDUM F—WAGE INDEX FOR URBAN AREAS—Continued

Urban Area (Constituent Counties)	Wage Index
7610 Sharon, PA [2]	0.8578
Mercer, PA	
7620 Sheboygan, WI [2]	0.8880
Sheboygan, WI	
7640 Sherman-Denison, TX	0.8795
Grayson, TX	
7680 Shreveport-Bossier City, LA	0.8750
Bossier, LA	
Caddo, LA	
Webster, LA	
7720 Sioux City, IA-NE	0.8473
Woodbury, IA	
Dakota, NE	
7760 Sioux Falls, SD	0.8790
Lincoln, SD	
Minnehaha, SD	
7800 South Bend, IN	1.0029
St. Joseph, IN	
7840 Spokane, WA	1.0513
Spokane, WA	
7880 Springfield, IL	0.8685
Menard, IL	
Sangamon, IL	
7920 Springfield, MO	0.8488
Christian, MO	
Greene, MO	
Webster, MO	
8003 Springfield, MA [2]	1.1204
Hampden, MA	
Hampshire, MA	
8050 State College, PA	0.9038
Centre, PA	
8080 Steubenville-Weirton, OH–WV [2] (OH Hospitals)	0.8670
Jefferson, OH	
Brooke, WV	
Hancock, WV	
8080 Steubenville-Weirton, OH–WV (WV Hospitals)	0.8548
Jefferson, OH	
Brooke, WV	
Hancock, WV	
8120 Stockton-Lodi, CA	1.0629
San Joaquin, CA	
8140 Sumter, SC [2]	0.8370
Sumter, SC	
8160 Syracuse, NY	0.9594
Cayuga, NY	
Madison, NY	
Onondaga, NY	
Oswego, NY	
8200 Tacoma, WA	1.1564
Pierce, WA	
8240 Tallahassee, FL [2]	0.8928
Gadsden, FL	
Leon, FL	
8280 Tampa-St. Petersburg-Clearwater, FL [1]	0.9099
Hernando, FL	
Hillsborough, FL	
Pasco, FL	
Pinellas, FL	
8320 Terre Haute, IN [2]	0.8602
Clay, IN	
Vermillion, IN	
Vigo, IN	
8360 Texarkana, AR-Texarkana, TX	0.8427
Miller, AR	
Bowie, TX	
8400 Toledo, OH	0.9664
Fulton, OH	
Lucas, OH	
Wood, OH	
8440 Topeka, KS	0.9117
Shawnee, KS	
8480 Trenton, NJ	1.0137
Mercer, NJ	
8520 Tucson, AZ	0.8821
Pima, AZ	

ADDENDUM F—WAGE INDEX FOR URBAN AREAS—Continued

Urban Area (Constituent Counties)	Wage Index
8560 Tulsa, OK	0.8454
Creek, OK	
Osage, OK	
Rogers, OK	
Tulsa, OK	
Wagoner, OK	
8600 Tuscaloosa, AL	0.8064
Tuscaloosa, AL	
8640 Tyler, TX	0.9404
Smith, TX	
8680 Utica-Rome, NY	0.8560
Herkimer, NY	
Oneida, NY	
8720 Vallejo-Fairfield-Napa, CA	1.2266
Napa, CA	
Solano, CA	
8735 Ventura, CA	1.0479
Ventura, CA	
8750 Victoria, TX	0.8154
Victoria, TX	
8760 Vineland-Millville-Bridgeton, NJ	1.0501
Cumberland, NJ	
8780 Visalia-Tulare-Porterville, CA [2]	0.9861
Tulare, CA	
8800 Waco, TX	0.8314
McLennan, TX	
8840 Washington, DC–MD–VA–WV [1]	1.0755
District of Columbia, DC	
Calvert, MD	
Charles, MD	
Frederick, MD	
Montgomery, MD	
Prince Georges, MD	
Alexandria City, VA	
Arlington, VA	
Clarke, VA	
Culpeper, VA	
Fairfax, VA	
Fairfax City, VA	
Falls Church City, VA	
Fauquier, VA	
Fredericksburg City, VA	
King George, VA	
Loudoun, VA	
Manassas City, VA	
Manassas Park City, VA	
Prince William, VA	
Spotsylvania, VA	
Stafford, VA	
Warren, VA	
Berkeley, WV	
Jefferson, WV	
8920 Waterloo-Cedar Falls, IA	0.8802
Black Hawk, IA	
8940 Wausau, WI	0.9426
Marathon, WI	
8960 [1] West Palm Beach-Boca Raton, FL	0.9615
Palm Beach, FL	
9000 Wheeling, WV–OH [2] (WV Hospitals)	0.8231
Belmont, OH	
Marshall, WV	
Ohio, WV	
9000 Wheeling, WV–OH [2] (OH Hospitals)	0.8670
Belmont, OH	
Marshall, WV	
Ohio, WV	
9040 Wichita, KS	0.9544
Butler, KS	
Harvey, KS	
Sedgwick, KS	
9080 Wichita Falls, TX	0.7668
Archer, TX	
Wichita, TX	
9140 Williamsport, PA [2]	0.8578
Lycoming, PA	
9160 Wilmington-Newark, DE–MD	1.1191
New Castle, DE	
Cecil, MD	
9200 Wilmington, NC	0.9402

ADDENDUM F—WAGE INDEX FOR URBAN AREAS—Continued

Urban Area (Constituent Counties)	Wage Index
New Hanover, NC	
Brunswick, NC	
9260 Yakima, WA [2]	1.0434
Yakima, WA	
9270 Yolo, CA	1.0199
Yolo, CA	
9280 York, PA	0.9264
York, PA	
9320 Youngstown-Warren, OH	0.9543
Columbiana, OH	
Mahoning, OH	
Trumbull, OH	
9340 Yuba City, CA	1.0706
Sutter, CA	
Yuba, CA	
9360 Yuma, AZ	0.9529
Yuma, AZ	

[1] Large Urban Area
[2] Hospitals geographically located in the area are assigned the statewide rural wage index for FY 2001.

ADDENDUM G—WAGE INDEX FOR RURAL AREAS

Nonurban area	DWage index
Alabama	0.7528
Alaska	1.2392
Arizona	0.8317
Arkansas	0.7445
California	0.9861
Colorado	0.8968
Connecticut	1.1715
Delaware	0.9074
Florida	0.8928
Georgia	0.8329
Hawaii	1.1059
Idaho	0.8678
Illinois	0.8160
Indiana	0.8602
Iowa	0.8030
Kansas	0.7605
Kentucky	0.7931
Louisiana	0.7713
Maine	0.8766
Maryland	0.8651
Massachusetts	1.1204
Michigan	0.9021
Minnesota	0.8881
Mississippi	0.7491
Missouri	0.7707
Montana	0.8688
Nebraska	0.8109
Nevada	0.9232
New Hampshire	0.9845
New Jersey [1]	.....
New Mexico	0.8497
New York	0.8499
North Carolina	0.8441
North Dakota	0.7716
Ohio	0.8670
Oklahoma	0.7491
Oregon	1.0132
Pennsylvania	0.8578
Puerto Rico	0.4264
Rhode Island [1]	.....
South Carolina	0.8370
South Dakota	0.7570
Tennessee	0.7838
Texas	0.7507
Utah	0.9037
Vermont	0.9409
Virginia	0.8189
Washington	1.0434
West Virginia	0.8231
Wisconsin	0.8880

ADDENDUM G—WAGE INDEX FOR RURAL AREAS—Continued

Nonurban area	DWage index
Wyoming	0.8817

[1] All counties within the State are classified as urban.

ADDENDUM H—WAGE INDEX FOR HOSPITALS THAT ARE RECLASSIFIED

Area	Wage Index
Abilene, TX	0.8240
Akron, OH	0.9736
Alexandria, LA	0.8170
Amarillo, TX	0.8715
Anchorage, AK	1.2865
Ann Arbor, MI	1.1064
Atlanta, GA	1.0096
Atlantic-Cape May, NJ	1.0822
Augusta-Aiken, GA–SC	0.9160
Barnstable-Yarmouth, MA	1.3583
Baton Rouge, LA	0.8734
Benton Harbor, MI	0.9021
Bergen-Passaic, NJ	1.1605
Billings, MT	0.9591
Binghamton, NY	0.8690
Birmingham, AL	0.8477
Bismarck, ND	0.7897
Bloomington-Normal, IL	0.9156
Boise City, ID	0.9042
Boston-Worcester-Lawrence-Lowell-Brockton, MA–NH (NH, RI, and VT Hospitals)	1.1160
Burlington, VT	1.0236
Casper, WY	0.8817
Champaign-Urbana, IL	0.9084
Charleston-North Charleston, SC	0.9067
Charleston, WV	0.8904
Charlotte-Gastonia-Rock Hill, NC–SC	0.9391
Chattanooga, TN–GA	0.9624
Chicago, IL	1.1015
Cincinnati, OH–KY–IN	0.9415
Clarksville-Hopkinsville, TN–KY	0.8277
Cleveland-Lorain-Elyria, OH	0.9593
Columbia, MO	0.8756
Columbia, SC	0.9433
Columbus, OH	0.9619
Dallas, TX	0.9913
Danville, VA	0.8212
Davenport-Moline-Rock Island, IA–IL	0.8898
Dayton-Springfield, OH	0.9442
Denver, CO	1.0181
Des Moines, IA	0.9011
Dothan, AL	0.8013
Dover, DE	0.9769
Duluth-Superior, MN–WI	1.0043
Eau Claire, WI	0.8880
Erie, PA	0.8985
Eugene-Springfield, OR	1.0965
Fargo-Moorhead, ND–MN	0.8517
Fayetteville, NC	0.8469
Flagstaff, AZ–UT	1.0525
Flint, MI	1.1058
Florence, AL	0.7652
Florence, SC	0.8777
Fort Collins-Loveland, CO	1.0647
Ft. Lauderdale, FL	1.0152
Fort Pierce-Port St. Lucie, FL	0.9622
Fort Smith, AR–OK	0.7947
Fort Walton Beach, FL	0.9358
Fort Wayne, IN	0.8665
Forth Worth-Arlington, TX	0.9527
Gadsden, AL	0.8423
Grand Forks, ND–MN	0.8954
Grand Junction, CO	0.9471
Grand Rapids-Muskegon-Holland, MI	1.0248
Great Falls, MT	0.9330
Greeley, CO	0.9573
Green Bay, WI	0.9308
Greensboro-Winston-Salem-High Point, NC	0.9124

ADDENDUM H—WAGE INDEX FOR HOSPITALS THAT ARE RECLASSIFIED—Continued

Area	Wage Index
Greenville, NC	0.9172
Greenville-Spartanburg-Anderson, SC	0.9003
Harrisburg-Lebanon-Carlisle, PA	0.9386
Hartford, CT (MA Hospital)	1.1420
Hattiesburg, MS	0.7491
Hickory-Morganton-Lenoir, NC	0.8577
Honolulu, HI	1.1866
Houston, TX	0.9732
Huntington-Ashland, WV–KY–OH	0.9605
Huntsville, AL	0.8779
Indianapolis, IN	0.9787
Jackson, MS	0.8698
Jackson, TN	0.8796
Jacksonville, FL	0.9208
Jersey City, NJ	1.1573
Johnson City-Kingsport-Bristol, TN–VA	0.8328
Joplin, MO	0.8148
Kalamazoo-Battlecreek, MI	1.0291
Kansas City, KS–MO	0.9509
Knoxville, TN	0.8340
Kokomo, IN	0.9525
Lafayette, LA	0.8490
Lansing-East Lansing, MI	0.9934
Las Cruces, NM	0.8510
Las Vegas, NV–AZ	1.0796
Lexington, KY	0.8712
Lima, OH	0.9320
Lincoln, NE	0.9666
Little Rock-North Little Rock, AR	0.8791
Longview-Marshall, TX	0.8732
Los Angeles-Long Beach, CA	1.2033
Louisville, KY–IN	0.9350
Lynchburg, VA	0.8749
Macon, GA	0.8974
Madison, WI	1.0271
Mansfield, OH	0.8690
Memphis, TN–AR–MS	0.8584
Milwaukee-Waukesha, WI	0.9767
Minneapolis-St. Paul, MN–WI	1.1017
Missoula, MT	0.9332
Mobile, AL	0.8163
Monmouth-Ocean, NJ	1.1283
Montgomery, AL	0.7653
Myrtle Beach, SC (NC Hospital)	0.8441
Nashville, TN	0.9301
New Haven-Bridgeport-Stamford-Waterbury-Danbury, CT	1.2034
New London-Norwich, CT	1.1926
New Orleans, LA	0.9295
New York, NY	1.4463
Newburgh, NY–PA	1.0317
Norfolk-Virginia Beach-Newport News, VA–NC	0.8441
Oakland, CA	1.4983
Ocala, FL	0.9243
Odessa-Midland, TX	0.9074
Oklahoma City, OK	0.8822
Omaha, NE–IA	0.9572
Orange County, CA	1.1411
Orlando, FL	0.9610
Peoria-Pekin, IL	0.8646
Philadelphia, PA–NJ	1.0937
Pine Bluff, AR	0.7680
Pittsburgh, PA	0.9575
Pittsfield, MA (VT Hospital)	0.9914
Pocatello, ID	0.8715
Portland, ME	0.9629
Portland-Vancouver, OR–WA	1.0910
Provo-Orem, UT	1.0041
Raleigh-Durham-Chapel Hill, NC	0.9646
Rapid City, SD	0.8865
Redding, CA	1.1664
Reno, NV	1.0438
Richland-Kennewick-Pasco, WA	1.1147
Roanoke, VA	0.8782
Rochester, MN	1.1315
Rockford, IL	0.8819
Sacramento, CA	1.1957

ADDENDUM H—WAGE INDEX FOR HOSPITALS THAT ARE RECLASSIFIED—Continued

Area	Wage Index
Saginaw-Bay City-Midland, MI	0.9575
St. Cloud, MN	1.0016
St. Joseph, MO	0.8848
St. Louis, MO–IL	0.9049
Salinas, CA	1.4502
Salt Lake City-Ogden, UT	0.9811
San Diego, CA	1.1784
Santa Cruz-Watsonville, CA	1.3897
Santa Fe, NM	1.0000
Santa Rosa, CA	1.2398
Seattle-Bellevue-Everett, WA	1.1016
Sherman-Denison, TX	0.8795
Sioux City, IA–NE	0.8473
South Bend, IN	1.0029
Spokane, WA	1.0333
Springfield, IL	0.8685
Springfield, MO	0.8212

ADDENDUM H—WAGE INDEX FOR HOSPITALS THAT ARE RECLASSIFIED—Continued

Area	Wage Index
Syracuse, NY	0.9594
Tampa-St. Petersburg-Clearwater, FL	0.9099
Texarkana, AR-Texarkana, TX	0.8427
Toledo, OH	0.9664
Topeka, KS	0.9117
Tucson, AZ	0.8821
Tulsa, OK	0.8454
Tuscaloosa, AL	0.8064
Tyler, TX	0.9141
Victoria, TX	0.8154
Washington, DC–MD–VA–WV	1.0755
Waterloo-Cedar Falls, IA	0.8802
Wausau, WI	0.9426
Wichita, KS	0.9262
Rural Alabama	0.7528
Rural Florida	0.8928
Rural Illinois	0.8160

ADDENDUM H—WAGE INDEX FOR HOSPITALS THAT ARE RECLASSIFIED—Continued

Area	Wage Index
Rural Louisiana	0.7713
Rural Michigan	0.9021
Rural Minnesota	0.8881
Rural Missouri	0.7707
Rural Montana	0.8688
Rural Oregon	1.0132
Rural Texas	0.7507
Rural Washington	1.0434
Rural West Virginia	0.8231
Rural Wisconsin	0.8880
Rural Wyoming (NE Hospital)	0.8671

[FR Doc. 00–28475 Filed 11–2–00; 11:43 am]

BILLING CODE 4120–01–P

Federal Register

Monday,
November 13, 2000

Part III

Department of Labor

Office of Federal Contract Compliance Programs

41 CFR Parts 60–1 and 60–2

Government Contractors, Affirmative Action Requirements; Final Rule

DEPARTMENT OF LABOR

Office of Federal Contract Compliance Programs

41 CFR Parts 60–1, 60–2

RIN 1215–AA01

Government Contractors, Affirmative Action Requirements

AGENCY: Office of Federal Contract Compliance Programs (OFCCP), ESA, Labor.

ACTION: Final rule.

SUMMARY: The Office of Federal Contract Compliance Programs (OFCCP) is revising certain regulations implementing Executive Order 11246, as amended. The Executive Order prohibits Government contractors and subcontractors, and Federally assisted construction contractors and subcontractors, from discriminating in employment, and requires these contractors to take affirmative action to ensure that employees and applicants are treated without regard to race, color, religion, sex, or national origin. The final rule will refocus, revise, and restructure 41 CFR part 60–2, the regulations that establish the requirements for affirmative action programs, and related sections in 41 CFR part 60–1. The rule will refocus the regulatory emphasis from the development of a document that complies with highly prescriptive standards, to a performance based standard that effectively implements an affirmative action program into the overall management plan of the contractor. The rule also will introduce a new tool, the Equal Opportunity Survey, that will aid contractors in assessing their pay and other personnel practices, while increasing the efficiency and effectiveness of program monitoring. OFCCP is encouraging contractors to file the Survey electronically.

The rule will help fulfill the Administration's Equal Pay Initiative to provide contractors with the necessary tools to assess and improve their pay policies. The rule also will help fulfill the Department's goal of increasing the number of Federal contractors brought into compliance. A means to fulfill that goal is for OFCCP to more effectively monitor the pay practices of Federal contractors.

In addition, the final rule revising and restructuring the regulations relating to affirmative action programs is part of OFCCP's continuing efforts to meet the objectives of the Reinventing Government Initiative. These objectives include obtaining input from those most directly affected by the regulations, reducing paperwork and compliance burdens wherever possible, more effectively focusing Government resources where most needed in order to administer the law most efficiently, making the regulations easier to understand by streamlining and simplifying them and writing them in plain language, and updating the regulations to accommodate modern organizational structures and to take advantage of new technologies.

EFFECTIVE DATES: These regulations are effective December 13, 2000.

FOR FURTHER INFORMATION CONTACT: James I. Melvin, Director, Division of Policy, Planning and Program Development, OFCCP, Room C–3325, 200 Constitution Avenue, NW., Washington, DC 20210. Telephone (202) 693–0102 (voice), (202) 693–1308 (TTY). Copies of this rule in alternative formats may be obtained by calling (202) 693–0102 (voice) or (202) 693–1308 (TTY). The alternative formats available are large print, electronic file on computer disk, and audiotape. The rule also is available on the Internet at. *http://www.dol.gov/dol/esa*.

SUPPLEMENTARY INFORMATION:

Current Regulations and Rulemaking History

Executive Order 11246, as amended, requires that Federal Government contractors and subcontractors ''take affirmative action to ensure that applicants are employed, and that employees are treated during employment, without regard to their race, color, religion, sex, or national origin.'' Affirmative action under Executive Order 11246, as amended, connotes more than passive nondiscrimination; it requires that contractors take affirmative steps to identify and eliminate impediments to equal employment opportunity.

The history, principles and concepts underlying the current blueprint for affirmative action under Executive Order 11246, as amended, were recounted in the notice of proposed rulemaking (NPRM), 65 FR 26088, published on May 4, 2000, and readers interested in that background information may refer to that discussion.

The current regulations require Federal Government nonconstruction contractors and subcontractors with 50 or more employees and a contract of $50,000 or more to prepare and implement a written Affirmative Action Program (AAP) for each of their establishments. The basic elements of the AAP are discussed in more detail in the Section-by-Section Analysis which follows.

On May 4, 2000, OFCCP published a proposed rule, 65 FR 26088, to revise specific regulations found at 41 CFR parts 60–1 and 60–2. The comment period closed on July 3, 2000. A total of 187 comments were received within the comment period from five contractor advocacy organizations; 137 labor, civil rights, and women's advocacy organizations and their individual members; four law firms that advise or represent contractors or contractor advocacy organizations; 14 contractors; 17 consulting firms; 9 civil rights and affirmative action officials of state and local governments and institutions of higher learning; and one Member of Congress. All the comments were reviewed and carefully considered in the development of this final rule.

The final rule revises the regulations at 41 CFR part 60–2, which address the content of AAPs. The rule also makes a corresponding revision of § 60–1.12, which covers records that must be retained, and § 60–1.40, which covers who must develop and maintain an AAP.

The rule also performs several ''housekeeping'' functions with respect to the part 60–2 regulations. A final rule was published on December 30, 1980 (45 FR 86215; corrected at 46 FR 7332, January 23, 1981), but was stayed in accordance with Executive Order 12291 on January 28, 1981 (46 FR 9084). This rule later was stayed indefinitely on August 25, 1981 (46 FR 42865), pending action on an NPRM published on that same date (46 FR 42968; supplemented at 47 FR 17770, April 23, 1982). No further action on the August 25, 1981, proposal, or consequently on the 1980 stayed final rule, has been taken. Both the 1980 final rule and the 1981 proposal addressed 41 CFR part 60–2. To avoid conflict with the rule published today, OFCCP hereby withdraws part 60–2 of the 1980 final rule. Additionally, consistent with the President's 1998 ''Plain Language'' Memorandum, OFCCP has replaced the word ''shall'' with ''must'' or ''will'' as appropriate to the context.

Overview of the Final Rule

The final rule, for the most part, adopts the revisions that were proposed in the May 4 NPRM. However, some of the proposed provisions have been modified in response to the public comments. The changes between the NPRM and the final rule are explained in detail in the Section-by-Section Analysis.

The discussion which follows identifies the significant comments received in response to the NPRM, provides OFCCP's responses to those comments, and explains any resulting changes to the proposed revisions.

Section-by-Section Analysis of Comments and Revisions

Section 60–1.12 Record Retention

OFCCP published a final rule revising 41 CFR part 60–1 on August 19, 1997. The proposed rule published on May 4, 2000 would further amend the record retention provisions in § 60–1.12 to harmonize them with the proposed changes to part 60–2. Specifically, the NPRM would amend paragraph (b) to eliminate the modifier ''written'' from a contractor's current requirement to develop a written affirmative action program. Furthermore, the proposal called for a new paragraph (c) that would codify in this part a longstanding regulatory obligation for contractors to be able to identify their employees and, where possible, applicants by gender, race, and ethnicity. Existing paragraph (a) would remain unchanged, while paragraphs (c) and (d) would be redesignated as paragraphs (d) and (e) respectively, with the first sentence of the newly designated paragraph (d) reflecting the addition of new paragraph (c).

Section 60–1.12(b) Affirmative Action Programs

In response to a number of comments, OFCCP has decided not to remove the modifier ''written'' from the phrase ''written affirmative action program.'' See further discussion under § 60–1.40 below.

Section 60–1.12(c)

The NPRM proposed a new paragraph (c) that would require that the contractor be able to identify the gender, race, and ethnicity of each employee, and where possible, the gender, race, and ethnicity of each applicant in any records the contractor maintains pursuant to this section. In addition, the contractor would be required to supply this information to OFCCP upon request. This provision is necessary for OFCCP to verify EEO data.

The agency received fifteen comments pertaining to paragraph (c), which fit into several categories. Most prominently, three consultants and two law firms sought a clear definition of which job seekers contractors must track as ''applicants.'' More narrowly, a contractor objected to tracking as job applicants those persons it perceives as lacking requisite skills. Still another contractor hoped that the ''where possible'' language in the proposal indicated OFCCP has not definitively resolved the applicant issue, but rather intends to pursue a flexible approach that reflects modern realities.

Three contractors, three consultants, and a law firm representing an employer association expressed their view that it is an undue burden to obtain demographic data for prospective employees, especially unsolicited applicants. Another commenter, an organization representing contractors, agreed that this practice is burdensome, but also observed that collection of such demographic information for employee and applicant records is already required. In actuality, all employers with fifteen or more employees, including Federal contractors, have been covered by the Uniform Guidelines on Employee Selection Procedures since 1978.

The agency wishes to make clear that it is not revising the meaning of ''applicant'' in the final rule. OFCCP and other Federal civil rights agencies have adhered to the same definition since Question and Answer 15 was published in the **Federal Register** in 1979 (see ''Adoption of Questions and Answers to Clarify and Provide a Common Interpretation of the Uniform Guidelines on Employee Selection Procedures,'' 44 F.R. 11996, 11998 (March 2, 1979)). On the other hand, the final rule recognizes that some job applicants refuse to divulge demographic information to identify themselves. Therefore, OFCCP wishes to be reasonable through inclusion of the ''where possible'' phrase referring to applicants in § 60–1.12(c)(1)(ii).

A consultant and a law firm representing a business association expressed concern about marking the actual records of employees and applicants with demographic information. As one of them noted, such a requirement would be contrary to normal equal employment opportunity procedures. OFCCP agrees and does not intend for contractors to place gender, race, and ethnicity information directly on the employment records of their employees or job candidates. Thus, for sake of clarity, in the final rule the agency substitutes the preposition ''for'' for ''in,'' which appeared in the proposed rule. Therefore, § 60–1.12(c)(1) now reads: ''For any record the contractor maintains pursuant to this section, the contractor must be able to identify: (i) The gender, race, and ethnicity of each employee; and (ii) where possible, the gender, race, and ethnicity of each applicant.'' Consistent with the Uniform Guidelines on Employee Selection Procedures (UGESP), the burden is on the contractor to demonstrate that every reasonable effort has been made to identify the gender, race, and ethnicity of the applicant. In the case of electronic applications, the contractor may use an electronic tear-off sheet.

Each of the remaining categories of comments on proposed § 60–1.12(c) came from just one or two commenters. A consultant wondered whether a contractor could be found in violation if an employee or job applicant refused to provide demographic information. In a similar vein, the same commenter wanted to know whether a contractor could justifiably discipline such a person. In fact, such concerns are groundless because a contractor's invitation to an employee or applicant to self-identify his or her gender, race, and ethnicity should always make plain that the provision of such information is voluntary. Consequently, OFCCP would not hold a contractor responsible for an employee or applicant's refusal to self-identify.

One contractor requested more guidance on how to collect applicant data. Such detailed ''how-to'' information does not belong in the regulation itself. However, the agency does offer some guidance here in today's preamble. Specifically, while self-identification is the most reliable and the preferred method for compiling information about a person's race, sex, and ethnicity, such as through use of a ''tear off sheet,'' other alternatives are likewise acceptable. Some contractors send a short form or post card requesting demographic information from applicants who respond to job advertisements in newspapers, electronic job posting services, or other places. Although self-identification is the preferred method, visual observation also can be an acceptable method for identifying demographic data, although it may not be reliable in every instance. Methods for collecting data on gender, race, and ethnicity are also discussed in Question and Answer 88 in the ''Adoption of Questions and Answers to Clarify and Provide a Common Interpretation of the Uniform Guidelines on Employee Selection Procedures,'' 44 FR 11996, 12008 (March 2, 1979).

Two other commenters urged delaying implementation of § 60–1.12(c) until 2002, arguing that collection of race and ethnicity information is not required until then. In fact, OMB published a Notice stating that ''Federal programs should adopt the standards [for race and ethnicity classification] as soon as possible, but not later than January 1, 2003,'' 62 FR 58781, 58782

(October 30, 1997). As per these requirements, OFCCP is adopting the new standards as soon as possible.

Finally, a contractor asserted that the proposal at § 60–1.12(c)(2) to require contractors to supply demographic information to OFCCP upon request would violate the attorney-client privilege. In fact, contractor personnel prepare most such documentation without the involvement of legal counsel. Even when they do not, it is clear that an enforcement agency must have access to pertinent records in order to carry out its lawful duties.

Accordingly, except as noted above, § 60–1.12(c) is adopted as proposed.

Section 60–1.40 Affirmative Action Programs

OFCCP proposed several modifications to § 60–1.40. The proposal retained in paragraph (a) current standards for those who must develop and maintain an affirmative action program, removed from paragraph (a) references to ''written'' affirmative action program, and deleted the remainder of paragraph (a), as well as all of paragraphs (b) and (c).

Several commenters strongly encouraged the retention of the designation ''written'' affirmative action programs. One commenter asserted, in part, that ''the 'written' AAP provides a structure on which to build and subsequently evidence a company's affirmative action efforts.'' Another commenter asserted that the ''written AAP is essential to adequate discussions of: the nature of an organization, the methodology used to develop goals, identify problem areas, good faith efforts; and to aid in the development of a Program Summary.'' OFCCP believes that these comments have merit. Consequently, OFCCP has decided to retain the reference to ''written'' affirmative action program in paragraph (a) of this section. ''Written'' also is reinserted into § 60–2.1 and inserted into § 60–2.2 for clarity. A ''written'' AAP may include electronic maintenance of the AAP. A contractor may maintain its AAP in electronic format if all of its employees who are permitted or required to have access to the AAP have equal access to the electronic version of the AAP. If some of a contractor's employees lack access to an electronic version of the AAP, the contractor also must provide access to a hard (paper) copy of the AAP.

The retention of the current language ''written'' by no means vitiates the spirit of the proposed language that affirmative action is more than a paper exercise and that it be an indelible aspect of the entire corporate enterprise or business process. Pursuant to these regulatory changes, OFCCP will focus its resources on the action undertaken to promote equal employment opportunity, rather than on the technical compliance.

One commenter, noting what it characterized as ''the magnitude of the systems and other changes that will be required,'' recommended that the new regulations apply only to AAPs created or updated after January 1, 2002, or after one full AAP year has elapsed after the new requirements become effective. The new regulations impose very few, if any, new requirements other than the Equal Opportunity Survey. Therefore, contractors will not need to make substantial changes to their AAPs in order to comply with the revised regulations. Nevertheless, a contractor that has prepared an AAP under the old regulations may maintain that AAP without penalty for the duration of the AAP year even if that AAP year overlaps with the effective date of the regulations.

In addition, in order to avoid confusion OFCCP has inserted into §§ 60–1.40(a)(1) and 60–2.1(a), the phrase ''(supply and service)'' after the term ''nonconstruction.'' Finally, OFCCP has revised slightly the structure of paragraph (a) to conform to **Federal Register** format requirements; no change of substance is intended by the revision.

Part 60–2

Subpart A—General

Section 60–2.1 Scope and application

Existing § 60–2.1 describes the purpose and scope of the regulations contained in 41 CFR part 60–2. Current paragraph (a) specifies which contractors are required to develop AAPs and provides a general overview of the regulations contained in part 60–2. Paragraph (b) of the current regulation states that relief, including back pay where appropriate, must be provided for an affected class in all conciliation agreements entered into to resolve violations uncovered during a compliance review. Paragraph (b) also states that an ''affected class'' problem must be remedied in order for a contractor to be considered in compliance, and indicates that a contractor may be subject to the enforcement procedures set forth in § 60–2.2 for its failure to remedy past discrimination.

Consistent with the goals of streamlining and simplifying the regulations, the rule revises and restructures § 60–2.1. The rule revises paragraph (a) by limiting the language to a brief description of the scope of the regulations contained in Part 60–2. No comments were received on this provision. The final rule adopts paragraph (a) as proposed.

The final rule deletes as redundant the contents of paragraph (b) of current § 60–2.1, because the requirement that conciliation agreements include provisions for back pay and other remedies also is set forth in § 60–1.33. The removal of the back pay and affected class language from paragraph (b), however, is not intended to affect OFCCP's ability to recover back pay or other affirmative relief for victims of discrimination.

The final rule also deletes the historical reference to ''Revised Order No. 4,'' the predecessor to the current Part 60–2, as it would not be appropriate or necessary in light of the changes to be made to part 60–2.

Paragraph (b) of the new § 60–2.1 specifies who must develop an AAP; it repeats the standards found in § 60–1.40, because recitation of the scope of coverage is important for completeness in both parts of the regulation. OFCCP has written the requirements in a list form for the reader's ease of understanding. As OFCCP did in § 60–1.40, OFCCP has revised slightly the structure of paragraph (b) to conform to **Federal Register** format requirements; no change of substance is intended by the revision.

Several commenters recommended that in the final rule this provision not be limited to full-time employees only. OFCCP did not intend for this provision to be read as including only full time employees. Some of the confusion concerning the provision may have arisen because the Equal Opportunity (EO) Survey form requested information about full time employees only. The request for information about full-time employees in the Survey was not intended to signal any change in OFCCP's requirement for reporting part-time, temporary and full time employees in written AAPs now or in the future.

The new § 60–2.1 provision does not make reference to particular categories of employees but rather refers generally to ''employees.'' The term ''employees'' is broad enough to include part-time, temporary and full time employees. Therefore, the final rule adopts paragraph (b) of the proposal without change.

The final rule adds a paragraph (c) that specifies that the contractor must develop AAPs within 120 days from the commencement of the contract. This requirement was previously set out in 41 CFR § 60–1.40(c). Since Part 60–2

addresses the requirements of AAPs, it appears more appropriate to include information specifying when the obligation to develop AAPs begins as part of part 60–2. One commenter, a law firm representing a business group, recommended that the final rule specify when the next AAP is to be in place. OFCCP has consistently held that the new AAP should be developed and in effect on the date that the old AAP expires. OFCCP believes that the AAP should be an ongoing management tool and not just an exercise to be performed annually. The provision is carried forward in the final rule as proposed.

The final rule contains a paragraph (d) describing who is included in affirmative action programs. Subparagraph (2) provides three options for contractors with fewer than 50 employees at a particular establishment to account for those employees for AAP purposes. Subparagraph (3) is designed to clarify that the AAP at the establishment that makes the selection decision is the appropriate establishment for inclusion of their selectees. This is particularly important for corporate headquarters AAPs, since selection decisions are likely to be made at corporate headquarters for employees who are assigned to other establishments within the corporation. This reflects OFCCP's ''corporate initiative'' (53 FR 24830, June 28, 1988).

Several commenters recommended that OFCCP permit contractors to develop their AAPs based on how their businesses actually are organized. Specifically these commenters asked to be allowed to prepare a single workforce analysis (and AAP) based on a business function or a line of business, without regard to the geographic locations of the establishments and employees (sometimes referred to as a ''functional'' AAP).

In response to these commenters, OFCCP has added a subparagraph 4 to the final rule. This provision reads as follows:

(4) Contractors may reach agreement with OFCCP on the development and use of affirmative action plans based on functional or business units. The Deputy Assistant Secretary, or his or her designee, must approve such agreements. Agreements allowing the use of functional or business unit affirmative action programs cannot be construed to limit or restrict how the OFCCP structures its compliance evaluations.

The purpose of this provision is to permit contractors to negotiate with OFCCP, subject to the approval of the Deputy Assistant Secretary, for permission to use affirmative action programs organized along business or functional lines. Some contractors have indicated that they would prefer a functional affirmative action program because it would allow them to better manage their equal employment opportunity programs and to hold the appropriate managers accountable for the performance of that program. This provision provides a mechanism by which the contractor can achieve these efficiencies. The provision also makes it clear that while OFCCP is willing to negotiate the structure of the contractor's affirmative action program, it is not offering to negotiate how the agency will conduct its compliance evaluations. Thus, while a contractor may receive permission to use functional or business unit affirmative action programs, OFCCP could still conduct an evaluation of a facility at a single geographic location. OFCCP hopes to have procedures for handling requests for functional AAPs in place before the effective date of the regulations. When the procedures are completed, OFCCP will post them on its Web site and/or include them in its Federal Contract Compliance Manual (FCCM).

At the suggestion of one commenter, the final rule substitutes ''work'' for the reference to ''perform their normal and customary duties'' in paragraph (d)(1). This change is necessary to clarify that ''work'' is the consistent meaning that OFCCP desires to convey throughout this provision. The proposed language implied a different meaning. Thus, the final rule provides, in relevant part, ''Employees who work at locations other than that of the manager to whom they report, must be included in the affirmative action program of their manager.''

Paragraph (e) of the proposed regulation explains how to identify employees who are included in AAPs at establishments other than where they are located. AAPs created according to paragraphs (d)(1) through (3) must identify these employees according to paragraph (e). Paragraph (d)(4) is not included in the requirements of paragraph (e) because the reporting formats for ''functional'' AAPs will be addressed on a case-by-case basis as part of the approval process.

One commenter, a law firm, suggested that the requirement to annotate where the employees are located would present an additional burden. As noted in the NPRM, the purpose of the proposed subparagraph was to clarify that the AAP at the establishment where the selection decision is made is the appropriate establishment for inclusion of their selectees. OFCCP does not agree that this requirement creates additional burden; it simply clarifies the agency's current policy and practice. Paragraph (e) of the proposal is adopted in the final rule as proposed.

Several commenters stated that OFCCP's use of more than one term when referring to a contractor's ''establishment'' or ''location'' was inconsistent or confusing. OFCCP agrees that using one term is clearer. Therefore, the final rule replaces the term ''location'' with ''establishment'' whenever ''location'' was used as a synonym for ''establishment.'' OFCCP replaced ''location'' with ''establishment'' in §§ 2.1 and 2.30.

Section 60–2.2 Agency Action

Paragraph (a) deals with agency approval of AAPs. In the NPRM, OFCCP proposed revising paragraph (a) for clarity. One proposed change was to state that a contractor's AAP would be deemed to be accepted by the Government ''at the time OFCCP notifies the contractor of the completion of the compliance evaluation or other action''; the existing provision says that the AAP is deemed accepted ''at the time the appropriate OFCCP * * * office has accepted such plan. * * *'' A commenter expressed concern that the change in paragraph (a) resulted in a change in the acceptance requirements. That is not the case. OFCCP has not changed the acceptance date requirements in paragraph (a). The only changes were for clarity.

OFCCP proposed in the NPRM to delete paragraphs (c) and (d) of the current § 60–2.2 which address show cause notices and other enforcement procedures for a contractor's failure to develop an AAP as prescribed in the regulations. OFCCP stated that since these subjects are addressed in §§ 60–1.26 and 60–1.28 there was no reason to repeat them in § 60–2.2.

Four commenters representing the interests of contractors objected to the deletion of these paragraphs. They expressed concern that the deletion of these paragraphs eliminates contractors' due process protections and the procedural safeguards of the show cause notice (SCN) process. They stated that without the SCN procedure, OFCCP could proceed directly to enforcement without offering contractors the opportunity to cure apparent violations.

OFCCP is persuaded that the proposed deletion may not have the limited impact originally contemplated by the agency. Therefore, the final rule restores the provisions in paragraphs (c) and (d) of § 60–2.2 with a minor change; paragraph (c)(1) has been modified to reflect the existing exceptions in § 60–1.26(b)(1) to the general rule that a show cause notice will be issued whenever

administrative enforcement is contemplated.

The existing exceptions in § 1.26(b)(1) are as follows:

> * * * if a contractor refuses to submit an affirmative action program, or refuses to supply records or other requested information, or refuses to allow OFCCP access to its premises for an on-site review, and if conciliation efforts under this chapter are unsuccessful, OFCCP may immediately refer the matter to the Solicitor, notwithstanding other requirements of this chapter.

Subpart B—Purpose and Contents of Affirmative Action Programs

Section 60–2.10 General Purpose and Contents of Affirmative Action Programs

A complete rewrite of § 60–2.10 was proposed. The rewrite was intended to convey that an AAP should be considered a management tool—an integral part of the way a corporation conducts its business. Further, the intent of the proposed revision was to encourage self-evaluation in every aspect of employment by establishing systems to monitor and examine the contractor's employment decisions and compensation systems to ensure that they are free of discrimination.

Two commenters opposed portions of this section: One stated the belief that the proposed section was redundant; and the other asserted that it was ''not aware of any authority for the OFCCP to dictate or prescribe the 'management approach' or policies of firms that perform federal contracts.''

One commenter, a civil rights organization, supported the proposal, stating that ''wholly integrating the monitoring and evaluative components of the AAP will ensure that contractors are assuming full responsibility for meaningful compliance as opposed to merely complying with a paperwork obligation.''

OFCCP continues to believe that this introductory section should emphasize the philosophy that an affirmative action program is ''more than a paperwork exercise. * * * Affirmative action, ideally, is a part of the way the contractor regularly conducts its business.'' Accordingly, § 60–2.10 is adopted as proposed.

Section 60–2.11 Organizational profile

The current § 60–2.11 is entitled ''Required utilization analysis.'' It contains an introductory paragraph which identifies broad job areas (EEO–1 categories) in which racial and ethnic minorities and women are likely to be underutilized, and sets forth in lettered paragraphs the core contents of a written AAP.

This final rule addresses only paragraph (a) of the current § 60–2.11, which deals with the workforce analysis. Paragraph (b) of the current regulations, which addresses the job group analysis, has been revised and moved to new 60–2.12 discussed below in this preamble. The introductory paragraph of current § 60–2.11 has been deleted as outdated and unnecessary.

Paragraph (a) of the current § 60–2.11 provides that a workforce analysis is a listing of job titles (not job groups) ranked from the lowest paid to highest paid within each department or similar organizational unit. The workforce analysis also shows lines of progression or promotional sequences of jobs, if applicable. If no lines of progression or usual promotional sequences exist, job titles are listed by departments, job families or disciplines, in order of wage rates or salary ranges. For each job title, the workforce analysis must reflect the wage rate or salary range, and the number of incumbents by race, ethnicity, and sex. In short, the workforce analysis is a map pinpointing the location of jobs and incumbent employees and their relationship to other jobs and employees in the contractor's workforce.

In the NPRM, OFCCP proposed to ''reengineer'' the workforce analysis into a shorter, simpler format called an ''organizational profile.'' In basic terms, the organizational profile was an organization chart showing each of the organizational units and their relationships to one another, and the gender, racial, and ethnic composition of each organizational unit. Unlike the current workforce analysis, the proposed profile focused only on organizational units and did not require the identification of individual job titles with the exception of the supervisor, if any. Likewise, reporting of race, sex, and salary information by job title would be eliminated using the organizational profile.

Eleven commenters stated that the organizational profile would be more burdensome than the workforce analysis. A number of commenters indicated that most of their companies either did not have an organizational chart or that if they had such charts, the charts only reflected the top levels of the organization. Other commenters indicated that the organizational structure of their companies was so fluid that charts would become quickly outdated. Many commenters representing or servicing the contractor community indicated that the current workforce analysis was not a burden to produce because their systems are configured to produce the analysis with very little effort. These commenters also indicated that there are numerous software products that facilitate the creation of a workforce analysis. Ten commenters specifically recommended that OFCCP permit contractors the option of continuing to use the workforce analysis if the contractor found this less burdensome.

In addition, some commenters, including women's and civil rights groups and a labor organization, raised concerns that adoption of the organizational profile, in lieu of the workforce analysis, might result in the loss of valuable compliance information. Others supported the organizational profile but cautioned against any further simplification because of the potential of the loss of important information.

OFCCP proposed the adoption of an organizational profile, in part, to decrease the burden on contractors. Prior to the publication of the NPRM, many stakeholders had raised concerns about the workforce analysis and had indicated that it was burdensome. However, since many contractors have now indicated that there is very little burden in preparing a workforce analysis and that there may be more burden for them in preparing an organizational profile, in this final rule OFCCP permits contractors to submit either the old style workforce analysis or an organizational display as the organizational profile. OFCCP believes that this is responsive to concerns about burden and to concerns that OFCCP not further simplify the organizational profile.

A number of commenters from the contractor community objected to the requirement that the proposed organizational profile be presented as a ''detailed organizational chart or similar graphical representation.'' Five commenters indicated that the creation of a graphical representation would be burdensome because they did not have the software or systems to create such a chart and significant manual work would be required. In response to these concerns, OFCCP has made the provision of a ''graphical representation'' optional. The final rule permits contractors choosing the organizational display to use ''detailed graphical or tabular chart, text, spreadsheet, or similar presentation of the contractor's organizational structure'' for displaying the required information.

Following is a sample organizational display. This sample is provided for illustrative purposes only, and should

not be construed to represent a required format or template.

BILLING CODE 4510–15–P

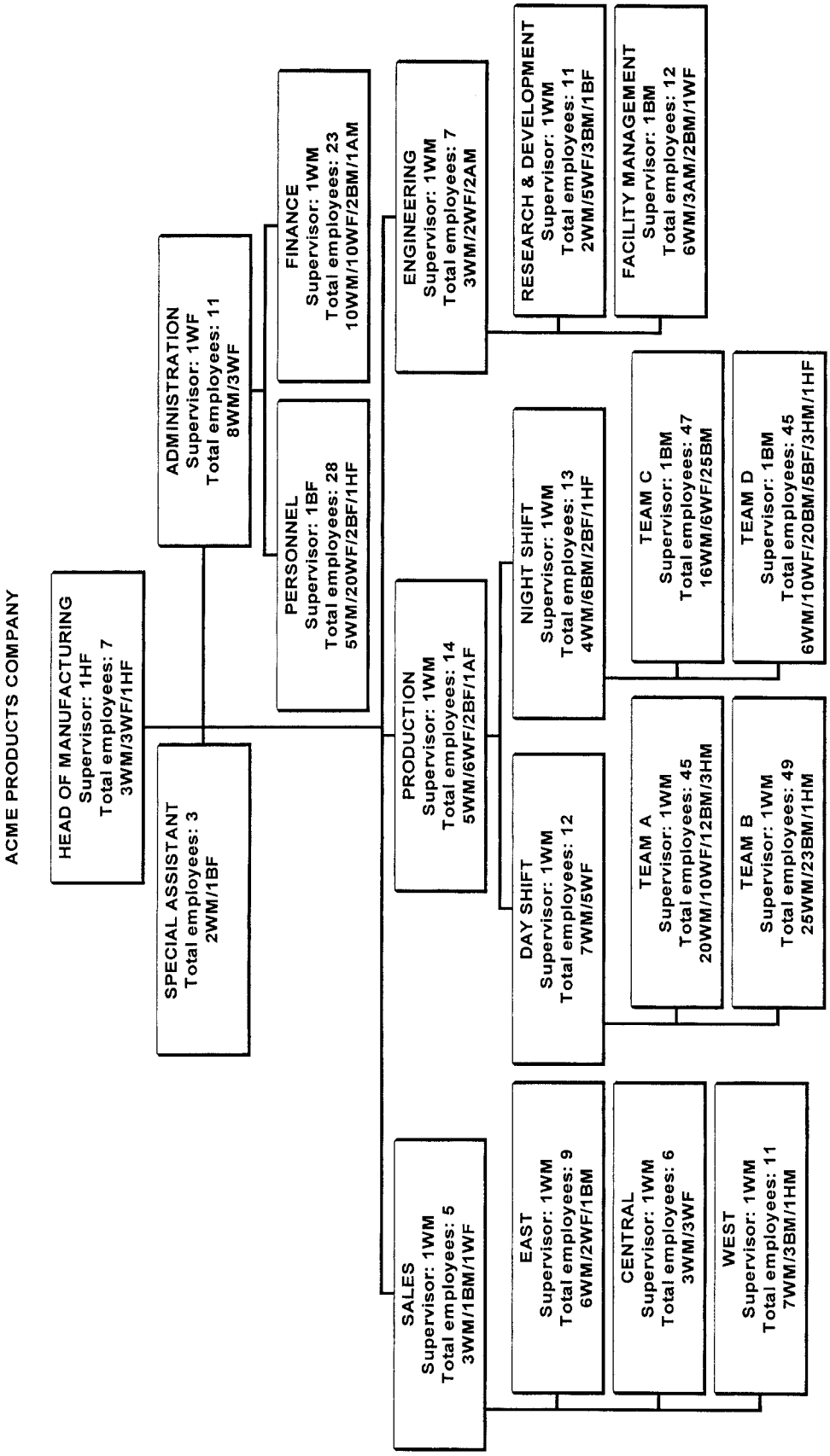

BILLING CODE 4510–45–C

Under the final rule, the organizational display would still not require the itemization of individual job titles, or the reporting of gender, race, ethnicity, and salary information by job title. Thus, the volume of the organizational display should be less than the volume of a workforce analysis (which often is one of the largest sections of the AAP).

Some commenters requested that OFCCP specify that it intends for the organizational profile to reflect the organization down to the level of the first line supervisor. It is OFCCP's intent that each organizational unit and all subordinate units, including the first-line supervisor level be accounted for in the organizational profile. OFCCP believes that the language of § 60–2.11 accomplishes this.

Some commenters questioned the usefulness of the proposed organizational profile. Contractors who feel it would be more helpful for their self-audit and affirmative action purposes to continue to develop a workforce analysis are at liberty to do so under the final rule. However, for those contractors electing to submit an organizational display, OFCCP believes that the display will provide a representation of where minorities and women may be underrepresented or concentrated, which permits preliminary review for potential discrimination and the need for affirmative action. This representation will be useful to many contractors engaging in self-analysis, and it is useful to OFCCP's compliance evaluation process. By introducing the flexibility to continue using the current workforce analysis or to adopt an organizational display that is not necessarily a graphic representation, OFCCP allows contractors to elect the method that is most meaningful for the particular contractor.

As noted in the NPRM, in subsection (c)(4), the minority group designations conform to the designations of minorities currently used in the EEO–1 report. OFCCP intends the racial and ethnic designations used in the regulations at 41 CFR Chapter 60, to be consistent with the revised standards set forth by OMB. OFCCP will coordinate any changes in these designations with the Equal Employment Opportunity Commission (EEOC) so that record keeping and reporting requirements for both agencies are compatible.

Section 60–2.12 Job Group Analysis

The NPRM would provide much greater guidance and clarification on how to structure job groups than is contained in the current regulation at § 60–2.11(b). Many commenters supported the majority of the proposal but added specific recommendations, especially for paragraph (e).

Section 60–2.12(a) Purpose

Job group analysis is the first step in comparing the representation of minorities and women in the contractor's workforce with the estimated availability of qualified minorities and women who could be employed. When the representation of minorities or women within a job group is less than their availability by some identifiable measure (see discussion of § 60–2.16, below) the contractor must establish goals.

No comments were received regarding proposed paragraph (a) and it is adopted without change.

Section 60–2.12(b)

The reason for combining job titles is to organize the workforce into manageable size groups to facilitate analysis, while still maintaining elements of commonality among the jobs grouped together. The jobs included in a job group must have three elements in common, *i.e.,* similar job duties, similar compensation, and similar opportunities for advancement within the contractor's workforce. Contractors have considerable discretion in determining which jobs to combine, but the resulting job groups must contain jobs with the requisite common elements. If the job groups are inappropriately drawn, the availability and utilization analyses based on those job groups will be flawed.

As was noted in the NPRM, some view the current instruction to combine jobs by similar content, wage rates, and opportunities as too general to provide clear, consistent guidance. Therefore, as proposed, paragraph (b) of the final rule describes similarity of content and similarity of opportunities, the two criteria most open to divergent interpretations. This rule states ''similarity of content refers to the duties and responsibilities of the job titles which make up the job group.'' In addition, it provides that ''similarity of opportunities refers to training, transfers, promotions, pay, mobility, and other career enhancement opportunities offered by the jobs within the job group.'' One commenter desired an explanation of similar wage rates. However, OFCCP believes ''wage rates'' to be a generally understood term. Moreover, the degree of similarity in wage rates appropriate for job group formation varies depending upon the size of a contractor's workforce and the structure of its compensation system.

Two other comments were received concerning paragraph (b). One explicitly expressed support for OFCCP's traditional method of job group formation based on similarity of jobs' content, wage rates, and opportunities, an approach that is continued in this final rule. The other commenter wanted the regulation to state that contractors have discretion in forming their job groups. However, such a provision is unnecessary, since contractors themselves decide which job titles are appropriately grouped to produce job groups, given the three regulatory parameters. Paragraph (b) is adopted as proposed.

Section 60–2.12(c)

Paragraph (c) of the final rule provides that a contractor's job group analysis must include a list of the job titles comprising each job group, a requirement that OFCCP's experience demonstrates most contractors already incorporate into their affirmative action programs. No comments were received on this provision.

Paragraph (c) also would reflect the provisions of §§ 60–2.1(d) and (e) relating to jobs located at another establishment. Specifically, new § 60–2.1(d) requires inclusion of each employee in the affirmative action program of the establishment at which he or she works, with exceptions made for employees who normally work at establishments other than that of the manager to whom they report, employees at establishments with fewer than 50 employees, and employees for whom selection decisions are made at a higher level establishment. Then, for identification purposes, § 60–2.1(e) requires contractors to annotate their affirmative action programs to indicate when employees are included in affirmative action programs for establishments other than where they are physically located. Five commenters objected to having to annotate the job group analysis as too burdensome. Most contractors would have to make only a small number of annotations. Without notations showing who is accountable for personnel actions affecting particular employees, or which affirmative action programs cover specific workers, it is difficult for designated contractor official(s) to adequately monitor progress or address problem areas. Similarly, OFCCP needs the ability to easily identify where responsibility lies for each of a contractor's employees in order to carry out its regulatory obligations during compliance evaluations. For these reasons, paragraph (c) is adopted in the final rule without change.

Section 60–2.12(d)

The NPRM proposed in § 60–2.12(d) that all jobs located at an establishment must be included in that establishment's job group analysis, except as provided in § 60–2.1(d). Just two commenters opposed the proposal, on the grounds that it would be too restrictive by preventing contractors from forming ''functional'' job groups across establishments. The discussion of functional AAPs in the preamble discussion of § 60–2.1 above addresses this issue. OFCCP adopts § 60–2.12(d) without change in the final rule.

Section 60–2.12(e) Smaller Employers

As a way of reducing unnecessary burden, the final rule makes explicit that a contractor with fewer than 150 employees may choose to utilize EEO–1 categories as job groups. The agency considers job grouping by EEO–1 category to be simpler both for smaller employers and for OFCCP.

Most commenters welcomed this regulatory revision for reducing the burden on smaller contractors when preparing their affirmative action programs. However, some felt the revision carried risks by going too far, while a few maintained the change should apply to a wider group of contractors.

Five commenters wrote that this proposal should go further. For example, a law firm and a contractor wanted to extend the optional use of EEO–1 categories to small establishments of larger employers. Another law firm would have OFCCP expand the option so as to grant it to any contractor with no more than fifty employees in an EEO–1 category. Finally, a municipality and a consultant recommended widening the option so that all contractors, regardless of size, could choose to use EEO–1 categories as job groups.

These recommendations are problematic. The agency is concerned with reducing burden on smaller employers, which lack the financial and human resources larger contractors possess. However, inappropriate mingling of many highly disparate jobs in large EEO–1 category-based job groups would likely occur for larger employers. Such mingling risks ignoring potentially vast differences in job content, wage rates and opportunities.

Here is an example of what happens if a larger contractor uses EEO–1 categories for job groups: Contractor Y has 450 employees. Of the 450 employees, 300 are classified as EEO–1 Professional. The breakdown is as follows:

	Total number of employees	Number of females	Females (percent)	Number of minorities	Minorities (percent)
Accountants	25	10	40	5	20
Financial Analysts	25	5	20	5	20
Human Resource Specialists	50	40	80	10	20
Computer Programmers	100	30	30	50	50
Electrical Engineers	50	10	20	20	40
Systems Analysts	50	5	10	10	20

A job group analysis by content, wage rate, and opportunities would look something like this: (Job Groups are in **bold** with Job Titles underneath)

ACCOUNTANTS
Accountant I
Accountant II
Accountant III

FINANCIAL ANALYSTS
Jr. Financial analyst
Sr. Financial analyst

HUMAN RESOURCE SPECIALISTS
Staffing specialists.
Benefits specialists.
Payroll specialists.

Computer programmers
Computer programmer I
Computer Programmer II
Computer programmer III

Electrical engineers
Electrical engineer I
Electrical Engineer II
Electrical engineer III

Systems analysts
Jr. Systems analyst.
Sr. Systems analyst.

If jobs are grouped by EEO–1 category, all professional jobs go into one Job Group as follows: (Job Groups are in **bold** with Job Titles underneath)

Professionals
Accountant I
Accountant II
Accountant III
Computer Programmer I
Computer Programmer II
Computer Programmer III
Electrical Engineer I
Electrical Engineer II
Electrical Engineer III
Jr. Systems Analyst
Sr. Systems Analyst
Jr. Financial Analyst
Sr. Financial Analyst
Staffing Specialists
Benefits Specialists
Payroll Specialists

The problem with using EEO–1 categories for job groups becomes clear when the percentages of employees, availability, and utilization data are examined:

A job group analysis using content, wage rates, and opportunities looks like this:

Job group	Total number of employees	Percent of females	Female availability (percent)	Females underutilized?	Percent of minorities	Minority availability (percent)	Minorities underutilized?
Accountants	25	40	24	N	20	28	Y
Financial Analysts	25	20	32	Y	20	16	N
Human Resource Specialists	50	80	54	N	20	30	Y
Computer Programmers	100	30	30	N	50	65	Y
Electrical Engineers	50	20	28	Y	40	40	N
Systems Analysts	50	10	10	N	20	36	Y

EEO–1 based grouping looks like this:

Job group	Total number of employees	Percent of females	Female availability (percent)	Females underutilized?	Percent of minorities	Minority availability (percent)	Minorities underutilized?
Professionals	300	33	30	N	33	43	Y

EEO–1-based grouping masks the utilization problems in six areas:

• Female utilization problems in **Financial Analysts** and **Electrical Engineers.**

• Minority utilization problems in **Accountants, Human Resource Specialists, Computer Programmers,** and **Systems Analysts.**

With EEO–1 based grouping:

• There do not appear to be any utilization problems among female professionals, which is incorrect. Grouping all female professionals together masks the utilization problems and the need to set goals for female Financial Analysts and Electrical Engineers.

• There appear to be utilization problems among all minority professionals, which is incorrect. Grouping all minority professionals together makes it unlikely that the contractor will focus affirmative action efforts on the four job areas in which utilization problems actually occur.

Five commenters urged OFCCP to limit its burden reduction proposal to contractors with total workforces of 100 or fewer employees, instead of 150. The 150 threshold is consistent with the threshold for smaller employers in the record keeping provisions of part 60–1. Two women's organizations and a labor organization were concerned that allowing larger employers to use EEO–1 categories would sacrifice ''meaningful data, (given that) proper job groupings are central to the aims of 60–2 and vital to the mission of OFCCP.'' Two consultants were more specific about their worries, fearing that even smaller employers could mask discrimination. One pointed out that a smaller contractor might easily have two or three levels of management in its officials and managers job group. For example, a chief executive officer, a chief financial officer, and a vice president could be joined with a director of the mailroom, hiding potential race or gender discrimination.

While these concerns may be valid in some instances, they must be balanced with the goal of reducing contractors' burdens whenever possible without undue sacrifice to the agency's ability to enforce its mission. Section 60–2.12(e) is adopted as proposed.

Section 2.13 Placement of Incumbents in Job Groups

No comments were received on this section. It is adopted without change.

Section 60–2.14 Determining availability

(Current § 60–2.14 entitled ''Program summary'' is found at § 60–2.31.)

Section 60–2.14 in the final rule, contains the guidelines for determining availability and replaces the current regulations at §§ 60–2.11(b)(1) and (2). The purpose of the availability analysis is to determine the representation of minorities and women among those qualified (or readily qualifiable) for employment for each job group in the contractor's workforce. Availability is the yardstick against which the actual utilization of minorities or women in the contractor's job group is measured.

In the current rule, the contractor is required to compute availability, separately for minorities and for women, for each job group. In determining availability, the contractor considers each of eight factors listed in the regulations. The factors are similar, but not identical, for minorities and women. Although contractors are required to consider all eight factors, they are not required to utilize each factor in determining the final availability estimate. Only the factors that are relevant to the actual availability of workers for the job group in question are to be used. Most contractors actually use only a few of the eight factors to compute the final availability estimates.

The ''eight-factor analysis'' for determining availability is one of the most frequently criticized elements of the Executive Order 11246 program. Common complaints among contractors are that the requirements are unnecessarily complex and not sufficiently focused. As proposed in the NPRM, this section simplifies the availability computations by reducing the number of factors from eight to two. These two factors are the same for minorities and for women.

Under this final rule, as under the current regulation, the contractor is required to compute availability, separately for minorities and for women, for each job group.

Fourteen commenters specifically supported the proposed reduction from eight factors to two. The proposed rule was equally popular among contractors, contractor associations, consultants, and civil rights and women's organizations.

One commenter association recommended that a reasonableness standard be included in the definition of ''trainable'' described in the second of the two factors. This commenter noted that the current regulation contains such a standard. Without this limitation, the commenter was concerned that the calculation of availability would be rendered impractical.

The inclusion of individuals who are ''trainable'' is intended to address the recommendations of civil rights and women's groups that the availability computation include consideration of training opportunities. It is a refinement of the requirement in the previous regulations (§§ 60–2.11(b)(1)(viii) and (b)(2)(viii)) that the contractor consider the degree of training which it is reasonably able to undertake as a means of making all job classes available to minorities and to women.

In response to this comment, OFCCP has revised the final rule to restore a reasonableness standard regarding the concept of ''trainable employees.'' OFCCP believes that this modification will make it easier for contractors to calculate ''trainable employees'' while achieving the goal of requiring contractors to consider this pool of available workers.

The final rule now provides at § 60–2.14(c) that the two factors to be considered in determining availability are:

(1) The percentage of minorities or women with requisite skills in the reasonable recruitment area. The reasonable recruitment area is defined as the geographical area from which the contractor usually seeks or reasonably could seek workers to fill the positions in question.

(2) The percentage of minorities or women among those promotable, transferable, and trainable within the contractor's organization. Trainable refers to those employees within the contractor's organization who could, with appropriate training which the contractor is reasonably able to provide,

become promotable or transferable during the AAP year.

Contractors would be required to determine the percentages in § 60–2.14(c)(2), by undertaking one or both of the following steps:

1. Determine which job groups are ''feeder pools'' for the job group in question. The feeder pools are job groups from which individuals are promoted.

2. Ascertain which employees could be promoted or transferred with appropriate training which the contractor is reasonably able to provide.

Example #1: a contractor has a job group of Engineering Managers. Over the past year, all individuals who have been promoted into the Engineering Managers job group have been promoted from only two other job groups: Chemical Engineering Project Leaders and Petroleum Engineering Project Leaders. The Chemical Engineering Project Leaders job group has 100 incumbents, of whom 20 are minority and 25 are female. The Petroleum Engineering Project Leader job group also has 100 incumbents, of whom 15 are minority and 20 are female. The ''feeder pool'' availability is the total number of minority or female incumbents divided by the total number of incumbents for the two job groups.

Job Group	Total Incumbents	Minority Incumbents	Female Incumbents
Chem.E PL	100	20	25
Pet.E PL	100	15	20

Minority Availability (20+15)/(100+100)=17.5%
Female Availability (25+20)/(100+100)=22.5%

Example #2: A contractor has a job group of Entry Level Managers. This contractor has a management training program. A review of the training program shows that of the 200 employees in the program last year, 100 completed the program and are eligible for Entry Level Manager positions this AAP year. Of those 100 who completed the program, 45 are minority and 40 are female. The availability in this example is the percentage of minorities or females that completed the training program.

Total individuals eligible for promotion	Minorities eligibile for promotion	Females eligible for promotion	Minority availability (percent)	Female availability (percent)
100	45	40	45	40

OFCCP's experience has shown that these factors are the ones most contractors use to compute availability estimates. Taken together, they reflect contractors' assertions of who is qualified and available for employment.

Section 60–2.14(e) requires a contractor to define its reasonable recruitment area so as not to exclude minorities and women, and to develop a brief written rationale for selection of that recruitment area. On occasion, defining the recruitment area in a slightly different way can significantly enlarge or reduce the proportion of minorities or women with requisite skills available for employment. In such a case, the contractor is required to assure that the recruitment area chosen will not have the effect of excluding minorities or women.

Three commenters, a contractor and two consultants, expressed concern about the prohibition against drawing the reasonable recruitment area in a way that has the effect of excluding minorities or women. One noted that even if such exclusion is unintentional, contractors will be found in violation. Accordingly, the commenters recommended adding the term ''unreasonably'' or ''intentionally'' in front of the word ''excluding.'' OFCCP does not agree that this change is necessary or desirable. The objective of this section of the regulations is to have the contractor compute, as accurately as possible, the availability of minorities and women for employment. Accurate computation of availability is essential to the entire goal setting process. Improper drawing of the reasonable recruitment area has the effect of misstating availability. The effect is the same, whether the improper drawing is intentional or inadvertent, and it cannot be accepted. If a contractor is found in violation for unintentionally drawing its recruitment area in a way that excludes minorities or women, it will be given ample opportunity to correct the error before the conclusion of the compliance evaluation.

Section 60–2.14(f) requires that contractors define the pool of promotable, transferable, and trainable employees in such a way as not to exclude minorities or women, and to develop a brief documented rationale for the selection of the pool. One commenter recommended a clarification that this subsection will not be interpreted to mean that contractors will be found in violation for defining feeder groups in a way that unintentionally has the effect of excluding minorities or women. For reason similar to that discussed above, OFCCP declines to add this clarification.

Further, § 60–2.14(d) requires that the contractor use the most current and discrete statistical data to conduct its availability analyses. This is addressed in Section 2G05(e) and Appendix 2B of the FCCM. Examples of such information include census data, data from local job service offices, and data from colleges and other training institutions. One commenter asserted that it is difficult to identify the most current statistical data in practice because few contractors have access to data more current than the decennial census. Sections 2G04 and 2G05 of the FCCM provide guidance on other sources of availability data. Moreover, decennial census data or some variant thereof often will satisfy the requirement to use the most current information ''available.'' Another commenter asserted that determining availability is laborious for large, national companies that hire from the top educational institutions across the nation for professional ranks. OFCCP disagrees as to the difficulty of this task. Data on college and university graduates are readily available in private publications, from the U.S. Department of Education, and from the schools themselves.

When a job group is composed of job titles with different availability rates, § 60–2.14(g) requires the contractor to compute a composite availability estimate. The composite availability figure would represent a weighted

average of the availability estimates for all the job titles in the job group.

The composite weighted average availability is computed by determining the percentage of total job group incumbents represented by the incumbents in each job title, multiplying each incumbent percentage by the corresponding availability for that job title, and summing the results.

The computation is illustrated by the following job group of professionals with a total of 80 incumbents:

Job Title	Number of incumbents	Availability (percent)
Accountant	20	35
Auditor	40	20
Analyst	20	15

1. Accountant=20/80 incumbents, or .25 Auditor=40/80 incumbents, or .5 Analyst=20/80 incumbents, or .25
2. Accountant=.25 x .35=.0875 Auditor=.5 x .20=.1 Analyst=.25 x .15=.0375
3. Composite Availability=.0875+.1+.0375=.225 or 22.5%.

A comment from a law firm representing a business association urged OFCCP to delete the composite availability requirement entirely, or to at least clarify it to provide that determining availability for each job title is not required when a contractor uses ''appropriate census data that encompasses a broader range of job titles and/or occupational categories.'' The basis for the request was the commenter's assertion that ''census data already encompasses a range of job titles'' and ''already represents ''composite'' availability data when applied to a specific job group.'' OFCCP does not object, *per se,* to the use of aggregated census data in lieu of the job title by job title computation of composite availability, *when the aggregated data truly represent composite availability data for the job group in question.* However, in order for the use of aggregated census data to be acceptable, there must be a close match between the actual jobs included in the census data and those in the contractor's job group. Additionally, so as to remain true to the concept of weighted averaging, the percentage representation of each job in the census group must closely match the percentage representation of the corresponding job in the contractor's job group.

In the NPRM, OFCCP requested comments concerning whether contractors should be required to compute availability separately for individual minority subgroups as a general rule. Five commenters—two law firms, a contractor, a contractor representative, and an individual consultant— expressed opposition to computing availability separately for individual minority subgroups. One of these commenters expressed concern that it would cause confusion in that employees or applicants could identify themselves with multiple ethnic or racial characteristics. A law firm indicated that it would create rivalry between minority subgroups.

One commenter, a consultant, noted examples where it may be beneficial to calculate minority subgroups. This commenter stated that using total minorities allows the masking of discrimination against specific minority subgroups. This commenter indicated this practice of discriminating against minority subgroups could be self-perpetuating because management hires new employees as a result of referrals from current employees, with the effect of excluding other groups.

The regulation retains the requirement that contractors determine the availability of total minorities. The language in the proposal, which does not require calculating availability separately by individual minority subgroup, was not modified and has been adopted in the final rule.

Section 60–2.15 Comparing incumbency to availability

(Current § 60–2.15 entitled ''Compliance status'' was revised and moved to § 60–2.35, discussed below in the preamble.)

Section 60–2.15 addresses an aspect of the current regulations that is referred to as the ''utilization analysis,'' and replaces one portion of the current § 60–2.11(b). Section 60–2.15(a) requires the contractor to compare the representation of minorities and women in each job group with their representation among those available to be employed in that group. During compliance reviews, OFCCP typically finds that more minorities and women are available for employment in particular occupations and job groups than are actually employed in those positions. If the availability for a job group is greater than incumbency, and the difference is of a sufficient magnitude, the contractor must establish a goal.

The current regulation refers to the difference between availability and incumbency as ''underutilization,'' defined as ''having fewer minorities or women in a particular job group than would reasonably be expected by their availability.'' When this condition exists, the contractor must establish a goal. As noted in the preamble to the NPRM, OFCCP traditionally has permitted contractors to identify underutilization using a variety of methods, including: The ''any difference'' rule, *i.e.,* whether any difference exists between the availability of minorities or women for employment in a job group and the number of such persons actually employed in the job group; the ''one person'' rule, *i.e.,* whether the difference between availability and the actual employment of minorities or women equals one person or more; the ''80 percent rule,'' *i.e.,* whether actual employment of minorities or women is less than 80 percent of their availability; and a ''two standard deviations'' analysis, *i.e.,* whether the difference between availability and the actual employment of minorities or women exceeds the two standard deviations test of statistical significance.

Seven commenters addressed the standards for comparing incumbency to availability. Five of the seven commenters—two organizations representing women, a consultant, an association and a labor organization—advocated that OFCCP adopt some variation of the ''any difference'' standard across the board. They argued that contractors should be required to set placement goals for women and minorities whenever analysis demonstrates any difference between availability and utilization. They indicated that allowing contractors to choose the standard by which they will be evaluated introduces unnecessary inconsistency to the process, resulting in similarly situated establishments being held to different measures in assessing their employment of women and minorities. Another civil rights

membership organization commented that contractors should be required to set placement goals whenever analysis reveals a difference of one person between availability and utilization. One commenter, a consultant, stated that the proposal does not address the ''inappropriate nature'' of using the standard deviation approach when either the job groups or availability are too small. The commenter further stated that OFCCP continues to avoid implementing a regulation regarding determination of underutilization.

Conversely, two commenters, both law firms, recommended that OFCCP continue to permit contractors flexibility, arguing that the various acceptable methods be included in the regulatory text.

On balance, OFCCP believes that retaining the current practice of permitting various methods for determining availability is the appropriate approach to take. OFCCP further believes that the proposed wording of § 60–2.15 is sufficient to suggest to the contractor community when there exists the need to establish a goal. Therefore, the provision, § 60–2.15(b), is adopted without change.

Finally, current § 60–2.11(b) specifies that the AAP shall contain ''(a)n analysis of all *major* job groups'' for which underutilization determinations will be made (emphasis added). The regulations do not define ''major,'' nor do they distinguish major job groups from other job groups. Most contractors have treated all job groups as major, and have conducted the analyses for each. In the NPRM OFCCP proposed to discontinue the use of the word ''major,'' thereby requiring that contractors determine availability, compare incumbency to availability, and set placement goals (where comparison of availability to incumbency indicates a need to do so) for all job groups.

In the preamble of the NPRM, OFCCP expressly solicited comments on the proposal to drop the word ''major'' in reference to job groups. OFCCP received a comment from a law firm representing a business association objecting to the proposal to drop the term major. This commenter stated this change would ''make little practical difference to large contractors'' but would ''negatively impact small contractors.'' This commenter further stated that small contractors, ''relied on the current language to reasonably conclude they need not assess utilization of those job groups that are too small to permit meaningful analysis.'' This commenter concluded that the deletion of ''major'' would ''only add work, but no additional value, to a small contractor's AAP.'' OFCCP believes that this concern becomes less of an issue inasmuch as § 60–2.12 allows smaller contractors to use EEO–1 categories as their job groups.

In contrast, another association commented that it anticipated no added burden because contractors already have a practice of treating all job groups as ''major'' and stated that contractors already perform these analyses on each job group. A labor organization commented that requiring that underutilization analysis be performed for each job group rather than just ''major'' job groups is a sound step, consistent with the program's goals of promoting equal opportunity.

This section is adopted as proposed in the NPRM. This language assures that no one is excluded when comparing incumbency to availability because of the size of the job group.

Section 60–2.16 Placement Goals

The earlier sections of the final rule require a Federal contractor to analyze its workforce and evaluate its employment practices for the purpose of identifying and correcting gender-, race-, and ethnicity-based obstacles to equal employment opportunity. Where the need for corrective action is revealed, the AAP must include outreach and other steps precisely tailored to eliminate the barriers disclosed, and placement goals to target and measure the effectiveness of efforts directed towards achieving that result. In the preamble to the NPRM, OFCCP provided a brief history of how it has addressed the question of goals and how the regulatory provisions requiring goals fits into that history.

Section 60–2.16(a) sets out the purpose of placement goals. It explains that goals ''serve as objectives or targets reasonably attainable by every good faith effort.'' It also explains that goals are used to measure progress toward equal employment opportunity.

One contractor association commented that in its view there was no meaningful distinction between the use of goals and the use of quotas. The commenter stated, ''OFCCP requires contractors to pursue a race-based or gender-based hiring and promotion system.'' The commenter suggested that goals could only be justified by a demonstration that they are needed to remedy specifically identified past discrimination. Absent evidence of such demonstration, the commenter suggests that there is no ''compelling governmental interest'' that would justify the setting of goals and that to do so would violate the equal protection clause of the U.S. Constitution. The commenter cites a number of court decisions to support its position.

OFCCP disagrees with this commenter. OFCCP does not require contractors to pursue a race- or gender-based hiring and promotion system. As noted in the NPRM, what OFCCP requires is that contractors engage in outreach and other efforts to broaden the pool of qualified candidates to include minorities and women. Contrary to the suggestion made by the commenter, goals are not a device to achieve proportional or equal results; rather the goal setting process is used to target and measure the effectiveness of affirmative action efforts to eradicate and prevent barriers to equal employment opportunity. OFCCP's position with respect to goals is explained more fully in an OFCCP Administrative Notice entitled ''Numerical Goals under Executive Order 11246,'' which was issued in December 1995.

A contractor association questioned whether the first sentence of § 2.16(b) was necessary, since § 60–2.15 discusses when a goal must be set and § 60–2.16(c) establishes the level at which a goal must be set. Another commenter requested clarification of terms in this same sentence. In response to these comments, OFCCP has deleted the first sentence of § 60–2.16(b) in the final rule.

Another commenter urged OFCCP to ''state loud and clear, that there is no presumption of discrimination'' based on the fact that a contractor is required under the regulations to set a goal. OFCCP believes that the statement at § 60–2.16(b) that ''A contractor's determination under § 2.15 that a placement goal is required constitutes neither a finding nor an admission of discrimination'' is a very ''loud and clear'' statement of this point.

Commenters, generally, raised no concerns about § 60–2.16(c). This provision is adopted without change in the final rule.

Two commenters representing a number of contractors raised a concern about the statement at § 60–2.16(d) that ''In the event of a substantial disparity in the utilization of a particular minority group, a contractor may be required to establish separate goals for those groups.'' The commenter was concerned because the term ''substantial disparity'' is not defined and feared that the requirement ''will have the practical result of producing quotas and will, no doubt pit one minority group against another.''

As indicated in § 60–2.16(d), setting a single goal for all minorities is expected

to continue to be the norm for most contractors. The purpose of the additional language concerning substantial disparities for a particular group is intended to address specific situations where a particular minority group, or men and women of a particular minority group, are substantially underutilized. This approach is taken directly from OFCCP's current regulations at § 60–2.12(l). In appropriate circumstances, OFCCP will continue to require separate goals for particular minority groups or by gender within minority groups. It is not intended to represent a change. Therefore, OFCCP has not changed this language in the final rule.

Section 60–2.17 Additional Required Elements of Affirmative Action Programs

The preceding sections of the regulations have focused primarily on the diagnostic component of written AAPs—the statistical analyses of the contractor's workforce to identify equal employment opportunity problems. However, meaningful affirmative action also requires that the contractor develop and carry out action-oriented programs to eliminate the identified problems, and establish procedures for monitoring its employment activities to determine whether the AAP is effective.

The existing regulations address the action-oriented and evaluative components of AAPs in a section designated ''Additional required ingredients of affirmative action programs.'' That provision appears at § 60–2.13 in the existing regulations. OFCCP has eliminated a number of elements that no longer need to be specifically and separately set forth in regulatory form. The remaining provisions have been moved to § 60–2.17 and are now named ''Additional required elements of affirmative action programs.'' Although OFCCP has eliminated these provisions from the mandatory requirements of the AAP, the contractor may voluntarily choose and is encouraged to retain these elements in its program.

In the final rule, OFCCP has deleted, as specific required elements, the following items:

§ 60–2.13(a)—reaffirmation of the contractor's EEO policy in all personnel matters;

§ 60–2.13(b)—formal internal and external dissemination of the contractor's EEO policy;

§ 60–2.13(e)—establishment of goals and objectives by organizational units and job groups, including timetables for completion;

§ 60–2.13(i)—active support of local and national community action programs and community service programs; and

§ 60–2.13(j)—consideration of minorities and women not currently in the workforce having requisite skills.

In addition, OFCCP has deleted existing § 60–2.13(h)—compliance of personnel policies and practices with the Sex Discrimination Guidelines (41 CFR part 60–20). The Sex Discrimination Guidelines are an independent regulatory requirement to which contractors are subject, regardless of whether the Guidelines are mentioned as ''additional required elements.'' Eliminating redundancy by not referencing the Guidelines in § 60–2.17, therefore, in no way affects the contractor's obligation to comply with the Guidelines nor OFCCP's commitment to enforcing the Guidelines.

OFCCP has retained four of the original 10 ''additional required ingredients.'' OFCCP believes that these remaining items capture the essence of effective affirmative action, including subsuming many aspects of the specific ''ingredients'' that were deleted. They should energize and encourage contractors to improve upon and eliminate any weaknesses in their equal employment opportunity performance. The following elements in the existing § 60–2.13 are retained in the new § 60–2.17:

§ 60–2.13(c)—establishment of responsibilities for implementation of the contractor's AAP (codified as § 60–2.17(a));

§ 60–2.13(d)—identification of problem areas by organizational units and job groups (codified as § 60–2.17(b));

§ 60–2.13(f)—development and execution of action-oriented programs designed to eliminate problems and further designed to attain established goals and objectives (codified as § 60–2.17(c)); and

§ 60–2.13(g)—design and implementation of internal audit and reporting systems to measure effectiveness of the total program (codified as § 60–2.17(d)).

OFCCP proposed to modify the provision in § 60–2.13(c) of the existing regulations (§ 60–2.17(a) of this rule) concerning the ''establishment of responsibilities for implementation of the contractor's affirmative action program.'' This modification is derived from § 60–2.22(a) of the existing regulations, which recommends, but does not require, that the contractor assign an executive as director or manager of company equal opportunity programs and give that person the management support and staffing to carry out the assignment. The proposal expressly requires that the contractor provide for the implementation of the affirmative action program by assigning responsibility and accountability to a company official. However, the official is not required to be an executive of the company.

OFCCP received several comments on proposed subsection 60–2.17(a), the majority of which strongly supported the proposal. Those commenters stated, for example, that for the affirmative action program to be effectively implemented, adequate attention and resources must be devoted to its administration.

One commenter, an organization representing contractors, agreed that management responsibility and accountability are important factors in implementing a successful affirmative action program, but noted that many experienced human resources professionals believe that an ''affirmative action czar'' approach is not particularly effective. According to the commenter, this is because the czar model ''allows others in the organization to believe that nondiscrimination and affirmative action are the czar's responsibility not theirs.'' Therefore, the commenter argued, exactly how accountability and responsibility are to be accomplished should be left to the contractor. Another commenter took a different approach, writing, ''The OFCCP fails to recognize that frequently the person assigned with the responsibility for equal employment opportunity is often a staff member who serves in an advisory capacity, without the authority to implement these changes and therefore cannot be held accountable.''

OFCCP certainly encourages contractors to hold all managers accountable for equal employment opportunity and affirmative action. However, OFCCP also feels strongly that a company official must oversee equal opportunity and affirmative action efforts, and must have the authority and responsibility to make them effective, lest no-one is held accountable and responsible.

Finally, a few commenters expressed concern about the last sentence of subsection (a), which states that the official responsible for equal employment opportunity must have the authority, resources, support of and access to top management to ensure effective implementation of the AAP.

One wondered how a contractor would demonstrate to the compliance officer that the designated official has the required authority. OFCCP is confident that authority would be easily demonstrated by a few inquiries during the compliance evaluation process. The commenter also wondered whether, over time, this would lead to more boilerplate in AAPs designed to prove the necessary authority and access to top management. OFCCP considers this concern to be highly speculative.

A contractor, a law firm, and several consultants and organizations representing contractors expressed concerns with proposed subsection (b). Subsection (b) requires the contractor to perform in-depth analyses of its total employment process to determine whether and where impediments to equal employment opportunity exist. Areas to be analyzed include: (1) The workforce by organizational unit and job group; (2) personnel activity; (3) compensation systems; (4) selection, recruitment, referral and other personnel procedures; and (5) other areas that might impact the success of the affirmative action program. Many of the comments focused on the requirement to review compensation systems, with several commenters asserting that OFCCP does not have authority to enforce equal pay concerns, that analysis of compensation systems is not required by the current regulations, that compensation analyses impose an additional burden, or that OFCCP did not specify the types of analyses it would find acceptable. However, one of the contract clauses that Executive Order 11246 requires be inserted in all government contracts requires that the contractor agree not to discriminate on the basis of race, color, religion, sex or national origin. Areas in which discrimination expressly is prohibited include ''rates of pay and other forms of compensation.'' Section 202(1). Since the compensation analysis requirement is not new, it imposes no additional burden. The question of burden is also discussed in the Paperwork Reduction Act section below. In addition, contractors have the ability to choose a type of compensation analysis that will determine whether there are gender-, race-, or ethnicity-based disparities.

Commenters also expressed confusion about how the information gained from the analyses conducted under subsection (b) should be used by contractors, and how the contractor's actions will be evaluated by OFCCP. Much of the answer is found in subsection (c), which requires the contractor to develop and execute action-oriented programs designed to correct any problem areas identified pursuant to subsection (b), and to demonstrate that it has made good faith efforts to remove identified barriers, expand employment opportunities, and produce measurable results. Of course, if the contractor's analyses disclosed discrimination, the contractor would be expected to eliminate the discriminatory practices and provide appropriate remedies.

A few commenters asserted that little or no reduction of the burden or cost of implementing provisions of the rule would result from the revisions that were made to § 60–2.17. See discussion of burden reduction in the section below addressing the Paperwork Reduction Act.

Section 60–2.18 Equal Opportunity Survey

The proposed § 60–2.18 requires that nonconstruction contractor establishments designated by OFCCP prepare and file an Equal Opportunity (EO) Survey. The EO Survey contains information about personnel activities, compensation and tenure data and specific information about the contractor's affirmative action programs.

Virtually every commenter addressed the EO Survey. There were two general categories of comments: (1) comments on the Survey as a concept and its utility as an instrument to select contractors for compliance evaluations, including comments on the burden hours and (2) comments on the specific format and content of the Survey document.

There were numerous comments from women's and civil rights groups, labor organizations, and a consultant in favor of the EO Survey as a useful instrument to select contractors for compliance evaluations. These comments indicated that it will enhance, strengthen, and improve enforcement efforts; it will increase contractor accountability; it will aid in disclosing possible discriminatory personnel and compensation practices; it will encourage contractor self-audits and corrective actions; it will aid OFCCP in tailoring its evaluation activities to those contractors that appear to need the most help; and it will not be a burden on contractors. However, there were also numerous comments from contractors, law firms, employer associations, and consultants that asserted that the EO Survey is not a useful instrument, or expressed other concerns about the EO Survey.

One commenter asserted that the Administrative Procedure Act requires that OFCCP subject the actual EO Survey format to notice and comment rulemaking. OFCCP disagrees. As the Federal agency charged with enforcing Federal contractor compliance with Executive Order 11246, OFCCP has ample authority to investigate such compliance by, among other things, requesting general information relevant to whether a contractor is fulfilling its affirmative action duties or engaging in discriminatory employment practices. Section 202(5) of Executive Order 11246, and the regulations promulgated thereunder, mandate as a condition of each Government contract, that the contractor agree to furnish all information required by the Executive Order and to permit the Secretary of Labor access to the contractor's books, records and accounts for purposes of investigation to ascertain compliance with the rules, regulations and orders. 41 CFR 60–1.4(a)(5). The requirements of § 60–1.4(a) with respect to the production of data are not limited to information sought by OFCCP as part of a compliance evaluation. Nothing in the Administrative Procedure Act or elsewhere requires OFCCP to publish for notice and comment an enumeration of, or the format for, every item it will examine to determine whether contractors are complying with their contractual obligations. Moreover, OFCCP notes that public notice and comment on the Survey format were provided under the Paperwork Reduction Act.

Several comments were related to OFCCP's projection of the burden hours that it should take contractors to complete the EO Survey. Three organizations representing contractors surveyed a sample of their members concerning the length of time it took to complete the EO Survey. One organization found that the average completion time was 23 hours; the second, 30 hours, and the third stated that 80% of its sample took longer than 12 hours to complete the EO Survey. Given the newness of the EO Survey and the requisite learning curve of the individuals completing the EO Survey, the time required to complete a contractor establishment's initial EO Survey is undoubtedly greater than the time that will be required for subsequent EO Survey submissions. To take this learning curve into account, OFCCP has increased the estimated time to complete the EO Survey from 12 hours to 21 hours for the first two years the Survey is distributed. See Paperwork Reduction Act section below.

Several commenters believed OFCCP should explain how the EO Survey data would be used to select contractors for compliance evaluations. Another

commenter indicated that Part C of the EO Survey (which collects compensation data) is inadequate to help OFCCP select contractors for compliance evaluations. In actuality, the data in all three components of the EO Survey—Parts A, B and C—as well as other information, will be used in the contractor selection process.

Each part of the Survey will provide indicators of potential compliance problems for which further inquiry may be appropriate. For example, negative answers to the questions in Part A about the contractor maintaining AAPs under each of the laws enforced by OFCCP might suggest the need for follow-up in that area. Likewise, Part C data that indicate possible disparities in pay between men and women in particular EEO–1 categories might suggest the need for closer scrutiny of actual pay practices. The Survey responses do not prove that a problem exists, but rather are used as an indicator to guide OFCCP compliance evaluations.

One commenter suggested that construction contractors also be required to submit the EO Survey. Part 60–2 pertains solely to contractors with supply and service contracts. The current EO Survey was intended for nonconstruction contractors. OFCCP will, however, consider expanding the Survey to cover construction contractors in the future. It should be noted also that construction companies that have supply and service contracts, e.g., architectural, engineering, survey and the like, are subject to part 60–2.

Several other commenters indicated that the Survey was not appropriate for colleges and universities because they complete the IPEDS or EEO–6 form rather than the EEO–1 form. Currently OFCCP is not requiring colleges and universities to complete the Survey and there are no current plans to expand the EO Survey to include higher education contractors; however, OFCCP will consider this comment if the Survey is subsequently expanded to include higher education contractors.

A recurring concern of contractors is that information submitted to OFCCP, compensation information being the most frequently cited item, may be disclosed to competitors or the public under the Freedom of Information Act (FOIA).

Paragraph (d) states that OFCCP will treat information contained in the Equal Opportunity Survey as confidential to the maximum extent the information is exempt from public disclosure under FOIA. OFCCP explains in paragraph (d) that its practice is not to release data where the contractor still is in business and where the contractor asserts, and through the Department of Labor review process it is determined, that the data are confidential and that disclosure would subject the contractor to commercial harm. Several comments suggested that neither regulations nor case law under FOIA is adequate to ensure protection of information in the EO Survey. However, the more specific the information is about a particular employer, the more protection it is afforded under FOIA. Moreover, the Department's FOIA regulations at 29 CFR 70.26 require OFCCP to notify contractors on a case-by-case basis whenever a FOIA request is made. This notification gives contractors the opportunity to object to the disclosure of any data they consider confidential.

Throughout its history OFCCP has routinely collected compensation information during the course of its compliance evaluations, and OFCCP is not aware of any instance in which compensation data were disclosed without the consent of the contractor. It has always been OFCCP's policy not to release data that is determined to be confidential or has the potential to subject the contractor to commercial harm if disclosed, and this policy will be applied to EO Survey data as well. OFCCP believes that the concerns about the security of EO Survey data are unfounded.

Paragraph (b) of the NPRM provided that the Survey must be prepared in accordance with the format specified by the Deputy Assistant Secretary, but the specific format was not published in the NPRM. Paragraph (b) further stipulated that the Survey will include information that will allow for an accurate assessment of contractor personnel activities, pay practices, and affirmative action performance.

The NPRM also indicated that the Survey ''may'' include data elements such as applicants, hires, promotions, terminations, and compensation by race and gender. In this final rule, this provision is made mandatory, because these data are essential to OFCCP's analyses of contractors' personnel and compensation practices.

As use of the EO Survey develops and evolves, the Department may at some time determine that one or more of the data elements currently included in the EO Survey should be altered or deleted. In the event consideration is given to changing a data element requirement, the following circumstances must exist: (1) the Secretary must clearly demonstrate through statistical analyses of EO Survey submissions that the data element in question is no longer of value; and (2) the Secretary must follow Notice and Comment procedures.

Many comments addressed the content (i.e., format, definitions, etc.) of the EO Survey form as it is being implemented by OFCCP. Because § 60–2.18 does not provide for a specific format, OFCCP does not consider the specific contents of the Survey form now in use to have been part of the NPRM. Nevertheless, in the interest of full discussion of the EO Survey, OFCCP addresses those comments below.

During the first implementation phase of the EO Survey, which began in April 2000, a Survey format, reviewed and approved by OMB, was sent to approximately 7,000 contractors to complete and submit. While many of the comments concerning the format were favorable, a number of comments from law firms, employer associations, consultants and one or two contractors were critical of the format for a variety of reasons. Some indicated that the use of EEO–1 categories rather than job groups renders the data too broad to be meaningful in identifying noncompliance, as an indicator for potential problems, or as a self-auditing tool for contractors. Some other commenters said that using EEO–1 data would require companies to maintain two sets of data: one set for the AAP based on job groups and one for the EO Survey. On August 31, 2000, four organizations representing contractors met pursuant to Executive Order 12866 with OMB and OFCCP to discuss the Survey. These four organizations asserted that reporting Survey data by EEO–1 category represented an additional burden, because contractors usually maintain data by job groups.

OFCCP proposed the use of the nine EEO–1 job categories because (1) they are well known to Federal contractors, and have been in use for several decades; (2) many contractors now use the categories as job groups; (3) the categories are fixed and common across industries and therefore provide a ready means of comparing employment data from one contractor to another (this would not be the case with job groups, whose makeup varies from contractor to contractor); and, (4) job groups generally do not cross EEO–1 categories, which means that a contractor could determine EEO–1 category data simply by combining the data from several job groups. Additionally, OFCCP intends to use the EO Survey data to identify indicators of potential problems for purposes of scheduling and focusing compliance evaluations and not as evidence of discrimination, so detailed data are not necessary. While OFCCP's Equal Employment Data System (EEDS) is also based on EEO–1 data, the EO

Survey provides more in-depth data than the EEDS does, thus greatly increasing OFCCP's ability to predict potential problems when using the EO Survey as the instrument to select contractors for compliance evaluations. By the same token, the EO Survey should also be a useful tool for self-auditing purposes, to enable companies to focus on specific potential problems that may exist.

In response to the requests that OFCCP permit reporting by job group, and in the interest of flexibility, OFCCP has decided to allow contractors the option of submitting personnel activity and compensation data either by job group or by EEO–1 category. Contractors may submit EO Survey data by job group only under these circumstances:

(1) Contractors must submit both personnel activity and compensation data by job groups.

(2) Contractors may submit EO Survey data by job groups only via the Internet.

(3) Contractors must identify the EEO–1 category to which each job group belongs.

(4) Contractors may not submit a job group that crosses EEO–1 category lines.

One consultant asserted that the 30-day timeframe for completion of the Survey did not allow contractors sufficient time, and extensions beyond the May 31, 2000, due date were not granted. OFCCP will take this comment under advisement when determining the due date for future EO Survey submissions.

Several commenters expressed concern over the fact that the EO Survey does not allow for the reporting of data on part-time employees. Some commenters felt that this lack of data would impair OFCCP's ability to identify areas of potential discrimination. One commenter asserted that since many women and minorities are part-time employees, excluding them on the Survey underrepresents the number of women and minorities employed by contractors. Others objected to the exclusion of part-time employees as it was inconsistent with their Affirmative Action Program reporting systems.

OFCCP recognizes that excluding part-time employees from the EO Survey may restrict the Survey's effectiveness as a predictor of potential problems in the area of part-time employment. As a practical matter, including data on part-time incumbency and compensation would have increased the size of the EO Survey by several pages. OFCCP intends to use the EO Survey data as merely an indicator of potential problems and not as evidence of discrimination, so areas of potential discrimination concerning part-time employees can and will still be investigated during compliance evaluations.

Several commenters complained that the definition of ''applicant'' contained in the EO Survey instructions is ambiguous, and were concerned with how contractors could obtain race/gender information. The definition of applicant contained in the EO Survey is the same definition OFCCP and other civil rights agencies have relied upon for more than 20 years. It is taken from and is consistent with the Uniform Guidelines on Employee Selection Procedures (refer to Question and Answer No. 15, Adoption of Questions and Answers to Clarify and Provide a Common Interpretation of the Uniform Guidelines on Employee Selection Procedures (Qs and As), 44 FR 11996, 11998 (March 2, 1979)). With regard to obtaining race and gender information for reporting on the EO Survey, OFCCP notes that this is not a new requirement nor an additional burden, as contractors have had an affirmative obligation to ascertain the race and gender of their applicants, where possible, for as long as OFCCP has enforced Executive Order 11246. It is also consistent with § 60–3.4 of the Uniform Guidelines on Employee Selection Procedures.

Several commenters stated that they had problems with the definition of ''promotion'' used in the EO Survey, as it differed from the definition they used. The definition is consistent with previous guidance issued by OFCCP, as it was taken verbatim from the Glossary in Chapter 1 of OFCCP's FCCM. Promotions are to be captured within EEO–1 categories as well as from one EEO–1 category to a higher category (*e.g.,* from Professionals to Officials and Managers). To offer an alternative definition in the EO Survey would only create confusion and possibly additional burden on contractors.

One commenter said that the definition of ''hire'' needed clarification. OFCCP did not include a definition of ''hire'' in the most recent EO Survey, as it was found during cognitive testing that the word was well understood and no definition was necessary. OFCCP recognizes that while there may be slight variations in the way hires are reported (*i.e.,* the date the employee accepts the position, the date the employee first reports for work, etc.) from contractor to contractor, the variations are acceptable as long as the contractor is internally consistent. OFCCP does not see the need for a restrictive definition of this term.

A number of comments addressed the compensation data requested by the EO Survey. Many commenters supported requesting compensation data, because of the role of compensation in employment discrimination. Other commenters were not in favor of including compensation data. One such commenter indicated that the EO Survey fails to identify compensation discrimination. Another indicated that the contractor should be allowed to explain all the factors that influence compensation. One commenter noted that tenure is not a good indicator of compensation discrimination. Another stated that the EO Survey erroneously assumes that tenure with a company is the only important pay variable. Still another commenter was of the opinion that only tenure within the position currently held was relevant to compensation analysis. Another indicated that salary data should be aggregated to protect the confidentiality of individual salary data.

OFCCP believes that compensation data must be used in identifying potential problems as early in the process as possible and it, therefore, intends to retain compensation data in the EO Survey. Furthermore, the compensation data are used only as an indicator, a reason for further inquiry, not as evidence of discrimination. Therefore, OFCCP has decided to retain ''tenure'' in future versions of the EO Survey, and tenure is included as a required data element in § 2.18(b). If a compliance evaluation is scheduled and compensation is a focus area, the contractor will have the opportunity to explain all the additional factors that influence compensation.

Finally, the compensation information requested in the EO Survey is aggregated by gender and minority/non-minority status within each EEO–1 category and does not contain identifying information on individuals.

In the preamble to the NPRM OFCCP stated that it contemplated sending the Survey to no fewer than half of all nonconstruction contractor establishments each year; the most likely scenario was described as contractors submitting the Survey biennially, with approximately one half of all establishments submitting the Survey each year. OFCCP also stated that it was considering whether to codify this one half floor as part of the final rule. Several commenters, including women's organizations and labor unions, felt that codification of the number of Surveys was critical to the success of the project. OFCCP has decided that sending the Survey to half of all nonconstruction contractor establishments each year is the only way to ensure that the Survey will

continue to be a credible evaluation tool. Therefore, OFCCP will send the Survey to half of all nonconstruction contractor establishments each year. The final rule states that ''OFCCP will designate a substantial portion of all nonconstruction contractor establishments to prepare and file and Equal Opportunity Survey.'' OFCCP interprets ''a substantial portion'' to mean half of all nonconstruction contractor establishments. Interpreting ''substantial portion'' as ''half'' enhances OFCCP's ability to achieve the three stated objectives of the Survey:

(1) To increase compliance with equal opportunity requirements by improving contractor self-awareness and encourage self-evaluations.

(2) To improve the deployment of scarce federal government resources toward contractors most likely to be out of compliance.

(3) To increase agency efficiency by building on the tiered-review process already accomplished by OFCCP's regulatory reform efforts, thereby allowing better resource allocation.

Proposed paragraph (c) described how, when, and where contractors must file the Equal Opportunity Survey. The NPRM stated that contractors are encouraged to file the EO Survey in electronic format. Since ''electronic format'' may refer either to the means of transmission or the form in which the data are sent, OFCCP has clarified paragraph (c) to state that contractors are encouraged to submit the EO Survey via the Internet. Internet submission will greatly expedite OFCCP's receipt and analysis of submitted data. Contractors also may mail or fax the EO Survey to OFCCP. For clarification, paragraph (c) now states that the fax telephone number will be indicated in the EO Survey instructions. Two commenters suggested that the EO Survey due dates should be staggered. Staggered filing/submission dates are currently under consideration by OFCCP.

After considering all the comments received, the final rule adopts the EO Survey as a regulatory instrument. Certain issues such as the submission date and the time allowed for completion of the Survey are not part of this rule and will be addressed at a later date.

Section 60–2.30 Corporate Management Compliance Evaluations

This new section draws upon OFCCP's experience in conducting glass-ceiling reviews, addressing several issues that are unique to the corporate management environment.

Paragraph (a) briefly explains that the purpose of Corporate Management Compliance Evaluations is to ascertain whether individuals are encountering artificial barriers to advancement into mid-level and senior corporate management positions.

Paragraph (b) provided that OFCCP may expand the scope of a Corporate Management Compliance Evaluation beyond a company's headquarters establishment, if during the course of a compliance evaluation it comes to OFCCP's attention that compliance problems exist at other locations outside the corporate headquarters.

A number of commenters endorsed this section. Other commenters endorsed or did not oppose the general concept of codifying Corporate Management Evaluations, even as they expressed concerns about a particular portion of the proposal.

Several commenters, including a law firm, consultants, and organizations representing contractors, stated concern about paragraph (b) of the proposal. They felt that the provision would give OFCCP unlimited authority to expand the scope of Corporate Management Evaluations beyond corporate headquarters to any and all facilities within a corporation. OFCCP's purpose in looking beyond corporate headquarters is to examine ''glass ceiling'' barriers to promotional opportunities that are found at facilities outside the headquarters. For example, OFCCP may wish to analyze ''feeder pools'' at lower-level establishments from which selections for management positions at the headquarters establishment are made. See, generally, FCCM Section 5A04. It is not OFCCP's policy or practice to routinely expand corporate management compliance evaluations into broad-ranging reviews of subordinate facilities, or to audit for issues outside the scope of the glass ceiling. However, if in the course of pursuing a corporate management evaluation at a subordinate establishment, the agency learns of other practices or conditions that may violate the Executive Order (racially discriminatory graffiti in a restroom, for example), OFCCP believes that it has the right and the obligation to investigate those practices or conditions.

In the preamble to the NPRM, OFCCP asked for comments on whether to incorporate into the regulatory text a number of approaches that the agency has found to be particularly effective in addressing glass-ceiling problems. The comments were about equally divided between including the material in the regulations and including it in subregulatory guidance. Upon consideration, OFCCP finds persuasive the argument that inclusion in the regulations would be inconsistent with the objective of simplifying and streamlining the rules. OFCCP encourages contractors to seek guidance on eliminating barriers to the executive suite from publications on the subject of the glass ceiling, including OFCCP's 1997 report on the glass ceiling.

Section 60–2.31 Program Summary

OFCCP proposed to redesignate the current regulation at § 60–2.14 (Program Summary) as § 60–2.31, and to make one technical change to substitute the title ''Deputy Assistant Secretary'' for ''Director.'' OFCCP stated that it would replace the program summary requirement at some point in the future should the summary be found to be duplicative of the Equal Opportunity Survey. Comments were not sought on this simple redesignation. The changes have been adopted.

Section 60–2.32 Affirmative action records

This regulation adds a provision specifying that the contractor must make relevant records, including records maintained pursuant to §§ 60–1.12 and 2.10, available to OFCCP on request. This provision is derived from the last sentence of § 60–1.40(c) of the current regulations. It is designed to ensure that OFCCP will have access to the records it needs to ascertain a contractor's compliance with its obligations under part 60–2.

Six organizations representing the interests of organized labor, women, minorities, and affirmative action officers characterized the proposal as reasonable and stated that it will aid OFCCP in enforcing the requirements of Executive Order 11246.

On the other hand, one contractor and two consultants representing the interests of contractors were concerned that OFCCP would: request attorney-client privileged material; seek records and information ''outside'' the compliance evaluation process thereby potentially violating the Fourth Amendment to the Constitution; and, not protect contractors' secret data and confidential information.

There is no foundation for these concerns. Because OFCCP most commonly requests only the AAP and supporting documentation that are developed by the contractor pursuant to its contractual obligations, OFCCP does not usually request documents that would be subject to the attorney-client privilege. In fact, contractor personnel prepare most such documentation without the involvement of legal

counsel. Even when they involve legal counsel, it is clear that an enforcement agency must have access to pertinent records in order to carry out its lawful duties. OFCCP does not request material ''outside'' the compliance evaluation process other than to investigate complaints of alleged violations of the regulations. The confidentiality of contractors' information is protected by the requirements of the Trade Secrets Act and the Freedom of Information Act, and the Department's regulations implementing the FOIA.

The final rule adopts the proposal without change.

Section 60–2.33 Preemption

In the NPRM OFCCP stated its intent to move this provision from § 60–2.31 in the current regulation to § 60–2.33 without alteration, except for several technical wording changes. Notice and comment were not required, and comments were not solicited. The final rule adopts § 60–2.33 without change.

Section 60–2.34 Supersedure

OFCCP proposed to move this provision from § 60–2.32 in the current regulation to § 60–2.34, and to omit as outdated and unnecessary the second and third sentences of the current regulation. No comments were submitted.

The final rule adopts § 60–2.34 without change.

Section 60–2.35 Compliance Status

OFCCP proposed to expand upon and restructure a provision that appears at § 60–2.15 of the current regulations.

One commenter, a law firm, objected to a proposed sentence providing that the contractor's compliance status will be determined by analysis of statistical data and other non-statistical information that would indicate whether employees and applicants are being treated without regard to their race, color, religion, sex, or national origin. The commenter felt that ''OFCCP's current approach to 'statistical analyses' in the investigation or compliance process * * * does not provide for a reliable means to measure compliance status.'' The commenter referred to the ''median analysis'' OFCCP uses at the investigative stage to examine pay equity issues. OFCCP disagrees with the commenter's view. Median analysis is a valid tool for the first step of the investigative process and may demonstrate the need for further inquiry. The final rule adopts § 60–2.35 as proposed.

Regulatory Procedures

Executive Order 12866

The Department is issuing this final rule in conformance with Executive Order 12866. This rule has been determined to be nonsignificant for purposes of Executive Order 12866. In the NPRM, OFCCP stated that the proposed changes to the regulations in this NPRM would decrease the total estimated annualized cost to contractors of developing, updating, and maintaining an AAP by $147,950,698 and that the estimated average cost savings per establishment of developing, updating, and maintaining an AAP would be $1378, therefore making this regulation significant for purposes of Executive Order 12866.

Upon reviewing the comments to the NPRM concerning burden hours for the EO Survey and AAP, OFCCP has determined that this initial estimated decrease was too high. In the final rule, OFCCP is taking into account the reduction of the decrease in burden hours. Therefore, the changes to the regulations in this final rule will decrease the total estimated annualized cost to contractors of developing, updating, and maintaining an AAP by $89,357,163. The estimated average cost savings per establishment of developing, updating, and maintaining an AAP is $831. See Paperwork Reduction Act section below.

Congressional Review Act

In view of the revised cost savings as discussed above, this regulation is not a major rule for purposes of the Congressional Review Act.

Executive Order 13132

OFCCP has reviewed this rule in accordance with Executive Order 13132 regarding federalism, and has determined that it does not have ''federalism implications.'' The rule does not ''have substantial direct effects on the States, on the relationship between the national government and the States, or on the distribution of power and responsibilities among the various levels of government.''

Regulatory Flexibility Act

The rule will not have a significant economic impact on a substantial number of small business entities.

Permitting contractors to prepare either a traditional workforce analysis or the new-style organizational profile, allowing smaller contractors to use EEO–1 categories for their job groups, reducing the number of factors that must be considered to determine the availability of women and minorities from eight to two, and eliminating more than half of the additional required ingredients of the documentation of the AAP, will reduce costs associated with these provisions for all affected contractors. The Equal Opportunity Survey requirement will increase costs, but the overall result of the rule should be a reduction in the recordkeeping and reporting burden.

Thus, the Department concludes that the rule will not have a significant economic impact on a substantial number of small entities. The Secretary has certified to the Chief Counsel for Advocacy of the Small Business Administration to this effect. Therefore, a regulatory flexibility analysis under the Regulatory Flexibility Act is not required.

Unfunded Mandates Reform Act

For purposes of the Unfunded Mandates Reform Act of 1995, as well as Executive Order 13132, the rule does not include any Federal mandate that may result in increased expenditures by state, local, and tribal governments, or increased expenditures by the private sector, of $100,000,000 or more in any one year.

Paperwork Reduction Act

This rule contains information collections which are subject to review by the Office of Management and Budget (OMB) under the Paperwork Reduction Act of 1995. The rule revises regulations which contain information collection requirements (ICR) which are currently approved under OMB No. 1215–0072. The rule codifies a new requirement, the Equal Opportunity Survey, which was reviewed and approved by OMB under OMB No. 1215–0196. The EO Survey burden is being adjusted to 21 hours. That ICR is being adjusted in conjunction with this final rule.

The information collections affected by this final rule were identified in the NPRM. Those collections and their predicted effect on the recordkeeping hours contained in the approved 1215–0072 on file at OMB are summarized as follows:

- 60–1.12 Record Retention—5 percent increase
- 60–2.11 Organizational Profile—20 percent decrease
- 60–2.12 Job Group Analysis—10 percent decrease for contractors with fewer than 150 employees
- 60–2.14 Determining Availability—10 percent decrease
- 60–2.17 Additional Required Elements of Affirmative Action Programs—20 percent decrease

OFCCP invited the public to comment on whether each of the proposed collections of information: (1) Ensures that the collection of information is necessary to the proper performance of the agency, including whether the information will have practical utility; (2) estimates the projected burden, including the validity of the methodology and assumptions used, accurately; (3) enhances the quality, utility, and clarity of the information to be collected; and (4) minimizes the burden of the collection of information on those who are to respond, including through the use of appropriate automated, electronic, mechanical, or other technological collection techniques or other forms of information technology (*e.g.,* permitting electronic submission of responses).

There were no responses that specifically addressed the issues listed above. However, a significant number of commenters representing the contractor community expressed opinions about the burdens associated with the organizational profile requirement in their comments on the regulatory provision. They indicated that the current workforce analysis, for most contractors, is a computer generated product that is easily updated from data routinely stored for other purposes. Furthermore, it was indicated that, for many contractors, creating an organizational profile may prove to be time consuming and costly because it is not something they currently do. There appears to be general agreement that moving from the work force analysis to the organizational profile will not result in the 20 percent burden reduction that OFCCP estimated in the NPRM. Upon further consideration, OFCCP agrees that the original estimate may be too high. In its final ICR submission to OMB, OFCCP is revising the organizational profile burden reduction from 20% to 10%. In the absence of experience data, we estimate 50% of the contractors will use the organizational profile, resulting in a reduction in the estimated burden savings from 20% to 10%.

A few commenters also argued that OFCCP overstated the expected cost savings from the changes in the ''Additional required elements'' section of the rule (§ 60–2.17), primarily based upon their notion that the ''required elements'' being retained impose new burdens. Contrary to the commenters' beliefs, virtually everything required of contractors under the new § 60–2.17 already is required of contractors under existing regulations. Notably, no commenter disputed the basic proposition that the reduction in the number of required elements would reduce burdens. Further, OFCCP believes that the commenters disputing the size of the cost saving underestimate the efforts contractors should be making under the existing regulations.

At this time, OFCCP records indicate that the number of establishments has increased from approximately 89,807 to 107,414. Application of the estimated changes in burden hours discussed above for §§ 60–1.12, 60–2.11, 60–2.12, 60–2.14, and 60–2.17 results in the following burden estimates as compared with the current inventory under 1215–0072.

BURDEN CHANGE SUMMARY

	Current inventory	Current inventory adjusted for number of firms	Revised estimate	Changes
AAP Development	161,155	192,750	118,903	−73,847
AAP Updating	6,658,288	7,963,670	5,268,677	−2,694,993
AAP Maintenance	6,725,543	8,044,110	5,321,896	−2,722,214
Total Recordkeeping Burden	13,544,986	16,200,530	10,709,476	−5,491,054
Average hours per respondent	@150	@150	@99	

Section 60–2.18 requires contractors to submit an Equal Opportunity Survey to OFCCP. The information required for the Survey would come from the records contractors are required to retain by 41 CFR part 60. The Survey would not impose any new recordkeeping requirements. We estimate that this proposal would increase burden by 21 hours per respondent, for a total increased burden of 1,050,000 hours.

The estimated annualized cost to respondents is based on Bureau of Labor Statistics data in the publication ''Employer Costs for Employee Compensation'' (USDL: 99–173), which lists total compensation for executive, administrative, and managerial as $35.18 per hour and administrative support as $16.63 per hour. OFCCP estimates that for the Survey, 25 percent of the burden hours will be executive, administrative, and managerial and 75 percent will be administrative support. OFCCP has calculated the total estimated annualized cost of the Survey as follows:

Executive 1,050,000 × .25 × $35.18 = $9,234,750

Admin. Supp. 1,050,000 × .75 × $16.63 = $13,096,125

Total annualized cost estimate = $22,330,875

For §§ 60–1.12, 60–2.11, 60–2.12, 60–2.14, and 60–2.17 concerning AAP development, maintenance, and updating, OFCCP estimates that 20 percent of the burden hours will be executive, administrative, and managerial and 80 percent will be administrative support. OFCCP has calculated the total estimated annualized cost savings as follows:

Executive 5,491,054 × .20 × $35.18 = $38,635,056

Admin. Supp. 5,491,054 × .80 × $16.63 = $73,052,982

Total annualized cost savings estimate = $111,688,038

Total annualized cost savings estimate of sect;§ 60–1.12, 60–2.11, 60–2.12, 60–2.14, and 60–2.17 = $111,688,038

Total annualized cost estimate of EO Survey = $22,330,875

Total annualized cost savings estimate = $89,357,163

Estimated average cost savings per respondent = $831

List of Subjects in 41 CFR Parts 60–1 and 60–2

Civil rights, Discrimination in employment, Employment, Equal employment opportunity, Government contracts, and Labor.

Signed at Washington, DC, this 3rd day of November, 2000.

Alexis M. Herman,

Secretary of Labor.

Bernard E. Anderson,

Assistant Secretary for Employment Standards.

Shirley J. Wilcher,

Deputy Assistant Secretary for Federal Contract Compliance.

Accordingly, Part 60–2 of the rule amending 41 CFR Chapter 60 published on December 30, 1980 (45 FR 86216), which was delayed indefinitely on August 25, 1981 (46 FR 42865), is hereby withdrawn; and Parts 60–1 and 60–2 of Title 41 of the Code of Federal Regulations are amended as follows.

PART 60–1—OBLIGATIONS OF CONTRACTORS AND SUBCONTRACTORS

1. The authority citation for part 60–1 continues to read as follows:

Authority: Sec. 201, E.O. 11246 (30 FR 12319), as amended by E.O. 11375 (32 FR 14303) and E.O. 12086 (43 FR 46501).

2. Section 1.12 is revised to read as follows:

§ 60–1.12 Record retention.

(a) *General requirements.* Any personnel or employment record made or kept by the contractor shall be preserved by the contractor for a period of not less than two years from the date of the making of the record or the personnel action involved, whichever occurs later. However, if the contractor has fewer than 150 employees or does not have a Government contract of at least $150,000, the minimum record retention period shall be one year from the date of the making of the record or the personnel action involved, whichever occurs later. Such records include, but are not necessarily limited to, records pertaining to hiring, assignment, promotion, demotion, transfer, lay off or termination, rates of pay or other terms of compensation, and selection for training or apprenticeship, and other records having to do with requests for reasonable accommodation, the results of any physical examination, job advertisements and postings, applications and resumes, tests and test results, and interview notes. In the case of involuntary termination of an employee, the personnel records of the individual terminated shall be kept for a period of not less than two years from the date of the termination, except that contractors that have fewer than 150 employees or that do not have a Government contract of at least $150,000 shall keep such records for a period of not less than one year from the date of the termination. Where the contractor has received notice that a complaint of discrimination has been filed, that a compliance evaluation has been initiated, or that an enforcement action has been commenced, the contractor shall preserve all personnel records relevant to the complaint, compliance evaluation or enforcement action until final disposition of the complaint, compliance evaluation or enforcement action. The term ''personnel records relevant to the complaint,'' for example, would include personnel or employment records relating to the complainant and to all other employees holding positions similar to that held or sought by the complainant and application forms or test papers submitted by unsuccessful applicants and by all other candidates for the same position as that for which the complainant unsuccessfully applied. Where a compliance evaluation has been initiated, all personnel and employment records described above are relevant until OFCCP makes a final disposition of the evaluation.

(b) *Affirmative action programs.* A contractor establishment required under § 60–1.40 to develop and maintain a written affirmative action program (AAP) must maintain its current AAP and documentation of good faith effort, and must preserve its AAP and documentation of good faith effort for the immediately preceding AAP year, unless it was not then covered by the AAP requirement.

(c) *Contractor identification of record.* (1) For any record the contractor maintains pursuant to this section, the contractor must be able to identify:

(i) The gender, race, and ethnicity of each employee; and

(ii) where possible, the gender, race, and ethnicity of each applicant.

(2) The contractor must supply this information to the Office of Federal Contract Compliance Programs upon request.

(d) *Failure to preserve records.* Failure to preserve complete and accurate records as required by paragraphs (a) through (c) of this section constitutes noncompliance with the contractor's obligations under the Executive Order and this part. Where the contractor has destroyed or failed to preserve records as required by this section, there may be a presumption that the information destroyed or not preserved would have been unfavorable to the contractor: Provided, That this presumption shall not apply where the contractor shows that the destruction or failure to preserve records results from the circumstances that are outside of the contractor's control.

(e) *Applicability.* The requirements of this section shall apply only to records made or kept on or after December 22, 1997.

3. Section 60–1.40 is revised to read as follows:

§ 60–1.40 Affirmative action programs.

(a)(1) Each nonconstruction (supply and service) contractor must develop and maintain a written affirmative action program for each of its establishments, if it has 50 or more employees and:

(i) Has a contract of $50,000 or more; or

(ii) Has Government bills of lading which in any 12-month period, total or can reasonably be expected to total $50,000 or more; or

(iii) Serves as a depository of Government funds in any amount; or

(iv) Is a financial institution which is an issuing and paying agent for U.S. savings bonds and savings notes in any amount.

(2) Each contractor and subcontractor must require each nonconstruction subcontractor to develop and maintain a written affirmative action program for each of its establishments if it has 50 or more employees and:

(i) Has a subcontract of $50,000 or more; or

(ii) Has Government bills of lading which in any 12-month period, total or can reasonably be expected to total $50,000 or more; or

(iii) Serves as a depository of Government funds in any amount; or

(iv) Is a financial institution which is an issuing and paying agent for U.S. savings bonds and savings notes in any amount.

(b) Nonconstruction contractors should refer to Part 60–2 for specific affirmative action requirements. Construction contractors should refer to Part 60–4 for specific affirmative action requirements.

PART 60–2—AFFIRMATIVE ACTION PROGRAMS

4. Part 60–2 is revised to read as follows:

Subpart A—General

Sec.
60–2.1 Scope and application.
60–2.2 Agency action.

Subpart B—Purpose and Contents of Affirmative Action Programs

60–2.10 General purpose and contents of affirmative action programs.
60–2.11 Organizational profile.
60–2.12 Job group analysis.

60–2.13 Placement of incumbents in job groups.
60–2.14 Determining availability.
60–2.15 Comparing incumbency to availability.
60–2.16 Placement goals.
60–2.17 Additional required elements of affirmative action programs.
60–2.18 Equal Opportunity Survey.

Subpart C—Miscellaneous

60–2.30 Corporate management compliance evaluations.
60–2.31 Program summary.
60–2.32 Affirmative action records.
60–2.33 Preemption.
60–2.34 Supersedure.
60–2.35 Compliance status.

Authority: E.O. 11246, 30 FR 12319, and E.O. 11375, 32 FR 14303, as amended by E.O. 12086, 43 FR 46501.

Subpart A—General

§ 60–2.1 Scope and application.

(a) *General.* The requirements of this part apply to nonconstruction (supply and service) contractors. The regulations prescribe the contents of affirmative action programs, standards and procedures for evaluating the compliance of affirmative action programs implemented pursuant to this part, and related matters.

(b) *Who must develop affirmative action programs.*

(1) Each nonconstruction contractor must develop and maintain a written affirmative action program for each of its establishments if it has 50 or more employees and:

(i) Has a contract of $50,000 or more; or

(ii) Has Government bills of lading which in any 12-month period, total or can reasonably be expected to total $50,000 or more; or

(iii) Serves as a depository of Government funds in any amount; or

(iv) Is a financial institution which is an issuing and paying agent for U.S. savings bonds and savings notes in any amount.

(2) Each contractor and subcontractor must require each nonconstruction subcontractor to develop and maintain a written affirmative action program for each of its establishments if it has 50 or more employees and:

(i) Has a subcontract of $50,000 or more; or

(ii) Has Government bills of lading which in any 12-month period, total or can reasonably be expected to total $50,000 or more; or

(iii) Serves as a depository of Government funds in any amount; or

(iv) Is a financial institution which is an issuing and paying agent for U.S. savings bonds and savings notes in any amount.

(c) *When affirmative action programs must be developed.* The affirmative action programs required under paragraph (b) of this section must be developed within 120 days from the commencement of a contract and must be updated annually.

(d) *Who is included in affirmative action programs.* Contractors subject to the affirmative action program requirements must develop and maintain a written affirmative action program for each of their establishments. Each employee in the contractor's workforce must be included in an affirmative action program. Each employee must be included in the affirmative action program of the establishment at which he or she works, except that:

(1) Employees who work at establishments other than that of the manager to whom they report, must be included in the affirmative action program of their manager.

(2) Employees who work at an establishment where the contractor employs fewer than 50 employees, may be included under any of the following three options: In an affirmative action program which covers just that establishment; in the affirmative action program which covers the location of the personnel function which supports the establishment; or, in the affirmative action program which covers the location of the official to whom they report.

(3) Employees for whom selection decisions are made at a higher level establishment within the organization must be included in the affirmative action program of the establishment where the selection decision is made.

(4) If a contractor wishes to establish an affirmative action program other than by establishment, the contractor may reach agreement with OFCCP on the development and use of affirmative action programs based on functional or business units. The Deputy Assistant Secretary, or his or her designee, must approve such agreements. Agreements allowing the use of functional or business unit affirmative action programs cannot be construed to limit or restrict how the OFCCP structures its compliance evaluations.

(e) *How to identify employees included in affirmative action programs other than where they are located.* If pursuant to paragraphs (d)(1) through (3) of this section employees are included in an affirmative action program for an establishment other than the one in which the employees are located, the organizational profile and job group analysis of the affirmative action program in which the employees are included must be annotated to identify the actual location of such employees. If the establishment at which the employees actually are located maintains an affirmative action program, the organizational profile and job group analysis of that program must be annotated to identify the program in which the employees are included.

§ 60–2.2 Agency action.

(a) Any contractor required by § 60–2.1 to develop and maintain a written affirmative action program for each of its establishments that has not complied with that section is not in full compliance with Executive Order 11246, as amended. When a contractor is required to submit its affirmative action program to OFCCP (e.g., for a compliance evaluation), the affirmative action program will be deemed to have been accepted by the Government at the time OFCCP notifies the contractor of completion of the compliance evaluation or other action, unless within 45 days thereafter the Deputy Assistant Secretary has disapproved such program.

(b) If, in determining such contractor's responsibility for an award of a contract it comes to the contracting officer's attention, through sources within his/her agency or through the OFCCP or other Government agencies, that the contractor does not have an affirmative action program at each of its establishments, or has substantially deviated from such an approved affirmative action program, or has failed to develop or implement an affirmative action program which complies with the regulations in this chapter, the contracting officer must declare the contractor/bidder nonresponsible and so notify the contractor and the Deputy Assistant Secretary, unless the contracting officer otherwise affirmatively determines that the contractor is able to comply with the equal employment obligations. Any contractor/bidder which has been declared nonresponsible in accordance with the provisions of this section may request the Deputy Assistant Secretary to determine that the responsibility of the contractor/bidder raises substantial issues of law or fact to the extent that a hearing is required. Such request must set forth the basis upon which the contractor/bidder seeks such a determination. If the Deputy Assistant Secretary, in his/her sole discretion, determines that substantial issues of law or fact exist, an administrative or judicial proceeding may be commenced in accordance with the regulations contained in § 60–1.26; or the Deputy Assistant Secretary may require the

investigation or compliance evaluation be developed further or additional conciliation be conducted: Provided, That during any pre-award conferences, every effort will be made through the processes of conciliation, mediation, and persuasion to develop an acceptable affirmative action program meeting the standards and guidelines set forth in this part so that, in the performance of the contract, the contractor is able to meet its equal employment obligations in accordance with the equal opportunity clause and applicable rules, regulations, and orders: Provided further, That a contractor/bidder may not be declared nonresponsible more than twice due to past noncompliance with the equal opportunity clause at a particular establishment or facility without receiving prior notice and an opportunity for a hearing.

(c)(1) Immediately upon finding that a contractor has no affirmative action program, or has deviated substantially from an approved affirmative action program, or has failed to develop or implement an affirmative action program which complies with the requirements of the regulations in this chapter, that fact shall be recorded in the investigation file. Except as provided in § 60–1.26(b)(1), whenever administrative enforcement is contemplated, the notice to the contractor shall be issued giving the contractor 30 days to show cause why enforcement proceedings under section 209(a) of Executive Order 11246, as amended, should not be instituted. The notice to show cause should contain:

(i) An itemization of the sections of the Executive Order and of the regulations with which the contractor has been found in apparent violation, and a summary of the conditions, practices, facts, or circumstances which give rise to each apparent violation;

(ii) The corrective actions necessary to achieve compliance or, as may be appropriate, the concepts and principles of an acceptable remedy and/or the corrective action results anticipated;

(iii) A request for a written response to the findings, including commitments to corrective action or the presentation of opposing facts and evidence; and

(iv) A suggested date for the conciliation conference.

(2) If the contractor fails to show good cause for its failure or fails to remedy that failure by developing and implementing an acceptable affirmative action program within 30 days, the case file shall be processed for enforcement proceedings pursuant to § 60–1.26 of this chapter. If an administrative complaint is filed, the contractor shall have 20 days to request a hearing. If a request for hearing has not been received within 20 days from the filing of the administrative complaint, the matter shall proceed in accordance with part 60–30 of this chapter.

(3) During the ''show cause'' period of 30 days, every effort will be made through conciliation, mediation, and persuasion to resolve the deficiencies which led to the determination of nonresponsibility. If satisfactory adjustments designed to bring the contractor into compliance are not concluded, the case shall be processed for enforcement proceedings pursuant to § 60–1.26 of this chapter.

(d) During the ''show cause'' period and formal proceedings, each contracting agency must continue to determine the contractor's responsibility in considering whether or not to award a new or additional contract.

Subpart B—Purpose and Contents of Affirmative Action Programs

§ 60–2.10 General purpose and contents of affirmative action programs.

(a) *Purpose.* (1) An affirmative action program is a management tool designed to ensure equal employment opportunity. A central premise underlying affirmative action is that, absent discrimination, over time a contractor's workforce, generally, will reflect the gender, racial and ethnic profile of the labor pools from which the contractor recruits and selects. Affirmative action programs contain a diagnostic component which includes a number of quantitative analyses designed to evaluate the composition of the workforce of the contractor and compare it to the composition of the relevant labor pools. Affirmative action programs also include action-oriented programs. If women and minorities are not being employed at a rate to be expected given their availability in the relevant labor pool, the contractor's affirmative action program includes specific practical steps designed to address this underutilization. Effective affirmative action programs also include internal auditing and reporting systems as a means of measuring the contractor's progress toward achieving the workforce that would be expected in the absence of discrimination.

(2) An affirmative action program also ensures equal employment opportunity by institutionalizing the contractor's commitment to equality in every aspect of the employment process. Therefore, as part of its affirmative action program, a contractor monitors and examines its employment decisions and compensation systems to evaluate the impact of those systems on women and minorities.

(3) An affirmative action program is, thus, more than a paperwork exercise. An affirmative action program includes those policies, practices, and procedures that the contractor implements to ensure that all qualified applicants and employees are receiving an equal opportunity for recruitment, selection, advancement, and every other term and privilege associated with employment. Affirmative action, ideally, is a part of the way the contractor regularly conducts its business. OFCCP has found that when an affirmative action program is approached from this perspective, as a powerful management tool, there is a positive correlation between the presence of affirmative action and the absence of discrimination.

(b) *Contents of affirmative action programs.* (1) An affirmative action program must include the following quantitative analyses:

(i) Organizational profile—§ 60–2.11;

(ii) Job group analysis—§ 60–2.12;

(iii) Placement of incumbents in job groups—§ 60–2.13;

(iv) Determining availability—§ 60–2.14;

(v) Comparing incumbency to availability—§ 60–2.15; and

(vi) Placement goals—§ 60–2.16.

(2) In addition, an affirmative action program must include the following components specified in the § 60–2.17 of this part:

(i) Designation of responsibility for implementation;

(ii) Identification of problem areas;

(iii) Action-oriented programs; and

(iv) Periodic internal audits.

(c) *Documentation.* Contractors must maintain and make available to OFCCP documentation of their compliance with §§ 60–2.11 through 60–2.17.

§ 60–2.11 Organizational profile.

(a) *Purpose.* An organizational profile is a depiction of the staffing pattern within an establishment. It is one method contractors use to determine whether barriers to equal employment opportunity exist in their organizations. The profile provides an overview of the workforce at the establishment that may assist in identifying organizational units where women or minorities are underrepresented or concentrated. The contractor must use either the organizational display or the workforce analysis as its organizational profile:

(b) *Organizational display.* (1) An organizational display is a detailed graphical or tabular chart, text, spreadsheet or similar presentation of the contractor's organizational structure. The organizational display must

identify each organizational unit in the establishment, and show the relationship of each organizational unit to the other organizational units in the establishment.

(2) An organizational unit is any component that is part of the contractor's corporate structure. In a more traditional organization, an organizational unit might be a department, division, section, branch, group or similar component. In a less traditional organization, an organizational unit might be a project team, job family, or similar component. The term includes an umbrella unit (such as a department) that contains a number of subordinate units, and it separately includes each of the subordinate units (such as sections or branches).

(3) For each organizational unit, the organizational display must indicate the following:

(i) The name of the unit;

(ii) The job title, gender, race, and ethnicity of the unit supervisor (if the unit has a supervisor);

(iii) The total number of male and female incumbents; and

(iv) the total number of male and female incumbents in each of the following groups: Blacks, Hispanics, Asians/Pacific Islanders, and American Indians/Alaskan Natives.

(c) *Workforce analysis.* (1) A workforce analysis is a listing of each job title as appears in applicable collective bargaining agreements or payroll records ranked from the lowest paid to the highest paid within each department or other similar organizational unit including departmental or unit supervision.

(2) If there are separate work units or lines of progression within a department, a separate list must be provided for each such work unit, or line, including unit supervisors. For lines of progression there must be indicated the order of jobs in the line through which an employee could move to the top of the line.

(3) Where there are no formal progression lines or usual promotional sequences, job titles should be listed by department, job families, or disciplines, in order of wage rates or salary ranges.

(4) For each job title, the total number of incumbents, the total number of male and female incumbents, and the total number of male and female incumbents in each of the following groups must be given: Blacks, Hispanics, Asians/Pacific Islanders, and American Indians/Alaskan Natives. The wage rate or salary range for each job title must be given. All job titles, including all managerial job titles, must be listed.

§ 60–2.12 Job group analysis.

(a) Purpose: A job group analysis is a method of combining job titles within the contractor's establishment. This is the first step in the contractor's comparison of the representation of minorities and women in its workforce with the estimated availability of minorities and women qualified to be employed.

(b) In the job group analysis, jobs at the establishment with similar content, wage rates, and opportunities, must be combined to form job groups. Similarity of content refers to the duties and responsibilities of the job titles which make up the job group. Similarity of opportunities refers to training, transfers, promotions, pay, mobility, and other career enhancement opportunities offered by the jobs within the job group.

(c) The job group analysis must include a list of the job titles that comprise each job group. If, pursuant to §§ 60–2.1(d) and (e) the job group analysis contains jobs that are located at another establishment, the job group analysis must be annotated to identify the actual location of those jobs. If the establishment at which the jobs actually are located maintains an affirmative action program, the job group analysis of that program must be annotated to identify the program in which the jobs are included.

(d) Except as provided in § 60–2.1(d), all jobs located at an establishment must be reported in the job group analysis of that establishment.

(e) Smaller employers: If a contractor has a total workforce of fewer than 150 employees, the contractor may prepare a job group analysis that utilizes EEO–1 categories as job groups. EEO–1 categories refers to the nine occupational groups used in the Standard Form 100, the Employer Information EEO–1 Survey: Officials and managers, professionals, technicians, sales, office and clerical, craft workers (skilled), operatives (semiskilled), laborers (unskilled), and service workers.

§ 60–2.13 Placement of incumbents in job groups.

The contractor must separately state the percentage of minorities and the percentage of women it employs in each job group established pursuant to § 60–2.12.

§ 60–2.14 Determining availability.

(a) Purpose: Availability is an estimate of the number of qualified minorities or women available for employment in a given job group, expressed as a percentage of all qualified persons available for employment in the job group. The purpose of the availability determination is to establish a benchmark against which the demographic composition of the contractor's incumbent workforce can be compared in order to determine whether barriers to equal employment opportunity may exist within particular job groups.

(b) The contractor must separately determine the availability of minorities and women for each job group.

(c) In determining availability, the contractor must consider at least the following factors:

(1) The percentage of minorities or women with requisite skills in the reasonable recruitment area. The reasonable recruitment area is defined as the geographical area from which the contractor usually seeks or reasonably could seek workers to fill the positions in question.

(2) The percentage of minorities or women among those promotable, transferable, and trainable within the contractor's organization. Trainable refers to those employees within the contractor's organization who could, with appropriate training which the contractor is reasonably able to provide, become promotable or transferable during the AAP year.

(d) The contractor must use the most current and discrete statistical information available to derive availability figures. Examples of such information include census data, data from local job service offices, and data from colleges or other training institutions.

(e) The contractor may not draw its reasonable recruitment area in such a way as to have the effect of excluding minorities or women. For each job group, the reasonable recruitment area must be identified, with a brief explanation of the rationale for selection of that recruitment area.

(f) The contractor may not define the pool of promotable, transferable, and trainable employees in such a way as to have the effect of excluding minorities or women. For each job group, the pool of promotable, transferable, and trainable employees must be identified with a brief explanation of the rationale for the selection of that pool.

(g) Where a job group is composed of job titles with different availability rates, a composite availability figure for the job group must be calculated. The contractor must separately determine the availability for each job title within the job group and must determine the proportion of job group incumbents employed in each job title. The

contractor must weight the availability for each job title by the proportion of job group incumbents employed in that job group. The sum of the weighted availability estimates for all job titles in the job group must be the composite availability for the job group.

§ 60–2.15 Comparing incumbency to availability.

(a) The contractor must compare the percentage of minorities and women in each job group determined pursuant to § 60–2.13 with the availability for those job groups determined pursuant to § 60–2.14.

(b) When the percentage of minorities or women employed in a particular job group is less than would reasonably be expected given their availability percentage in that particular job group, the contractor must establish a placement goal in accordance with § 60–2.16.

§ 60–2.16 Placement goals.

(a) Purpose: Placement goals serve as objectives or targets reasonably attainable by means of applying every good faith effort to make all aspects of the entire affirmative action program work. Placement goals also are used to measure progress toward achieving equal employment opportunity.

(b) A contractor's determination under § 60–2.15 that a placement goal is required constitutes neither a finding nor an admission of discrimination.

(c) Where, pursuant to § 60–2.15, a contractor is required to establish a placement goal for a particular job group, the contractor must establish a percentage annual placement goal at least equal to the availability figure derived for women or minorities, as appropriate, for that job group.

(d) The placement goal-setting process described above contemplates that contractors will, where required, establish a single goal for all minorities. In the event of a substantial disparity in the utilization of a particular minority group or in the utilization of men or women of a particular minority group, a contractor may be required to establish separate goals for those groups.

(e) In establishing placement goals, the following principles also apply:

(1) Placement goals may not be rigid and inflexible quotas, which must be met, nor are they to be considered as either a ceiling or a floor for the employment of particular groups. Quotas are expressly forbidden.

(2) In all employment decisions, the contractor must make selections in a nondiscriminatory manner. Placement goals do not provide the contractor with a justification to extend a preference to any individual, select an individual, or adversely affect an individual's employment status, on the basis of that person's race, color, religion, sex, or national origin.

(3) Placement goals do not create set-asides for specific groups, nor are they intended to achieve proportional representation or equal results.

(4) Placement goals may not be used to supersede merit selection principles. Affirmative action programs prescribed by the regulations in this part do not require a contractor to hire a person who lacks qualifications to perform the job successfully, or hire a less qualified person in preference to a more qualified one.

(f) A contractor extending a publicly announced preference for American Indians as is authorized in 41 CFR 60–1.5(a)(6) may reflect in its placement goals the permissive employment preference for American Indians living on or near an Indian reservation.

§ 60–2.17 Additional required elements of affirmative action programs.

In addition to the elements required by § 60–2.10 through § 60–2.16, an acceptable affirmative action program must include the following:

(a) *Designation of responsibility.* The contractor must provide for the implementation of equal employment opportunity and the affirmative action program by assigning responsibility and accountability to an official of the organization. Depending upon the size of the contractor, this may be the official's sole responsibility. He or she must have the authority, resources, support of and access to top management to ensure the effective implementation of the affirmative action program.

(b) *Identification of problem areas.* The contractor must perform in-depth analyses of its total employment process to determine whether and where impediments to equal employment opportunity exist. At a minimum the contractor must evaluate:

(1) The workforce by organizational unit and job group to determine whether there are problems of minority or female utilization (*i.e.*, employment in the unit or group), or of minority or female distribution (*i.e.*, placement in the different jobs within the unit or group);

(2) personnel activity (applicant flow, hires, terminations, promotions, and other personnel actions) to determine whether there are selection disparities;

(3) compensation system(s) to determine whether there are gender-, race-, or ethnicity-based disparities;

(4) selection, recruitment, referral, and other personnel procedures to determine whether they result in disparities in the employment or advancement of minorities or women; and

(5) any other areas that might impact the success of the affirmative action program.

(c) *Action-oriented programs.* The contractor must develop and execute action-oriented programs designed to correct any problem areas identified pursuant to § 60–2.17(b) and to attain established goals and objectives. In order for these action-oriented programs to be effective, the contractor must ensure that they consist of more than following the same procedures which have previously produced inadequate results. Furthermore, a contractor must demonstrate that it has made good faith efforts to remove identified barriers, expand employment opportunities, and produce measurable results.

(d) *Internal audit and reporting system.* The contractor must develop and implement an auditing system that periodically measures the effectiveness of its total affirmative action program. The actions listed below are key to a successful affirmative action program:

(1) Monitor records of all personnel activity, including referrals, placements, transfers, promotions, terminations, and compensation, at all levels to ensure the nondiscriminatory policy is carried out;

(2) Require internal reporting on a scheduled basis as to the degree to which equal employment opportunity and organizational objectives are attained;

(3) Review report results with all levels of management; and

(4) Advise top management of program effectiveness and submit recommendations to improve unsatisfactory performance.

§ 60–2.18 Equal Opportunity Survey.

(a) *Survey requirement.* Each year, OFCCP will designate a substantial portion of all nonconstruction contractor establishments to prepare and file an Equal Opportunity Survey. OFCCP will notify those establishments required to prepare and file the Equal Opportunity Survey. The Survey will provide OFCCP compliance data early in the compliance evaluation process, thus allowing the agency to more effectively identify contractor establishments for further evaluation. The Survey will also provide contractors with a useful tool for self-evaluation.

(b) *Survey format.* The Equal Opportunity Survey must be prepared in accordance with the format specified by the Deputy Assistant Secretary. The Equal Opportunity Survey will include

information that will allow for an accurate assessment of contractor personnel activities, pay practices, and affirmative action performance. At a minimum, this will include such data elements as applicants, hires, promotions, terminations, compensation, and tenure by race and gender. As use of the EO Survey develops and evolves, the Department may at some time determine that one or more of the data elements currently included in the EO Survey should be altered or deleted. In the event consideration is given to changing a data element requirement, the following circumstances must exist:

(1) The Secretary must clearly demonstrate through statistical analyses of EO Survey submissions that the data element in question is no longer of value; and

(2) The Secretary must follow Notice and Comment procedures.

(c) *How, when, and where to file.* Contractors are encouraged to submit the Equal Opportunity Survey via the Internet. The Equal Opportunity Survey may also be submitted via facsimile to the telephone number indicated in the Survey instructions. Paper versions of the Equal Opportunity Survey must be mailed to the address indicated in the Survey instructions. The filing deadline will be specified by the Deputy Assistant Secretary.

(d) *Confidentiality.* OFCCP will treat information contained in the Equal Opportunity Survey as confidential to the maximum extent the information is exempt from public disclosure under the Freedom of Information Act, 5 U.S.C. 552. It is the practice of OFCCP not to release data where the contractor is still in business, and the contractor indicates, and through the Department of Labor review process it is determined, that the data are confidential and sensitive and that the release of data would subject the contractor to commercial harm.

Subpart C—Miscellaneous

§ 60–2.30 Corporate management compliance evaluations.

(a) Purpose. Corporate Management Compliance Evaluations are designed to ascertain whether individuals are encountering artificial barriers to advancement into mid-level and senior corporate management, *i.e.,* glass ceiling. During Corporate Management Compliance Evaluations, special attention is given to those components of the employment process that affect advancement into mid-and senior-level positions.

(b) If, during the course of a Corporate Management Compliance Evaluation, it comes to the attention of OFCCP that problems exist at establishments outside the corporate headquarters, OFCCP may expand the compliance evaluation beyond the headquarters establishment. At its discretion, OFCCP may direct its attention to and request relevant data for any and all areas within the corporation to ensure compliance with Executive Order 11246.

§ 60–2.31 Program summary.

The affirmative action program must be summarized and updated annually. The program summary must be prepared in a format which will be prescribed by the Deputy Assistant Secretary and published in the **Federal Register** as a notice before becoming effective. Contractors and subcontractors must submit the program summary to OFCCP each year on the anniversary date of the affirmative action program.

§ 60–2.32 Affirmative action records.

The contractor must make available to the Office of Federal Contract Compliance Programs, upon request, records maintained pursuant to § 60–1.12 of this chapter and written or otherwise documented portions of AAPs maintained pursuant to § 60–2.10 for such purposes as may be appropriate to the fulfillment of the agency's responsibilities under Executive Order 11246.

§ 60–2.33 Preemption.

To the extent that any state or local laws, regulations or ordinances, including those that grant special benefits to persons on account of sex, are in conflict with Executive Order 11246, as amended, or with the requirements of this part, they will be regarded as preempted under the Executive Order.

§ 60–2.34 Supersedure.

All orders, instructions, regulations, and memorandums of the Secretary of Labor, other officials of the Department of Labor and contracting agencies are hereby superseded to the extent that they are inconsistent with this Part 60–2.

§ 60–2.35 Compliance status.

No contractor's compliance status will be judged alone by whether it reaches its goals. The composition of the contractor's workforce (*i.e.,* the employment of minorities or women at a percentage rate below, or above, the goal level) does not, by itself, serve as a basis to impose any of the sanctions authorized by Executive Order 11246 and the regulations in this chapter. Each contractor's compliance with its affirmative action obligations will be determined by reviewing the nature and extent of the contractor's good faith affirmative action activities as required under § 60–2.17, and the appropriateness of those activities to identified equal employment opportunity problems. Each contractor's compliance with its nondiscrimination obligations will be determined by analysis of statistical data and other non-statistical information which would indicate whether employees and applicants are being treated without regard to their race, color, religion, sex, or national origin.

[FR Doc. 00–28693 Filed 11–9–00; 8:45 am]
BILLING CODE 4510–45–P

Federal Register

Monday,
November 13, 2000

Part IV

Department of Education

34 CFR Parts 100, 104, 106, and 110

Conforming Amendments to the Regulations Governing Nondiscrimination on the Basis of Race, Color, National Origin, Disability, Sex, and Age Under the Civil Rights Restoration Act of 1987; Final Rule

DEPARTMENT OF EDUCATION

34 CFR Parts 100, 104, 106, and 110

RIN 1870–AA10

Conforming Amendments to the Regulations Governing Nondiscrimination on the Basis of Race, Color, National Origin, Disability, Sex, and Age Under the Civil Rights Restoration Act of 1987

AGENCY: Office for Civil Rights, Department of Education.

ACTION: Final regulations.

SUMMARY: The Secretary amends the regulations governing nondiscrimination on the basis of race, color, national origin, sex, handicap, and age to conform with statutory amendments made by the Civil Rights Restoration Act of 1987 (CRRA). These amendments add a definition of ''program or activity'' or ''program'' that adopts the statutory definition of ''program or activity'' or ''program'' enacted as part of the CRRA.

DATES: These regulations are effective December 13, 2000.

ADDRESSES: After December 13, 2000, a complete version of the revised regulations will be available on request from OCR's Customer Service Team listed in **FOR FURTHER INFORMATION CONTACT** and will be available on the Internet at the following site: http://www.ed.gov/ocr/regs

FOR FURTHER INFORMATION CONTACT: Jeanette J. Lim, U.S. Department of Education, 400 Maryland Avenue, SW., room 5036 MES, Washington, DC 20202–1100. Telephone: (202) 205–5557. If you use a telecommunications device for the deaf (TDD), you may call the TDD number at (202) 260–0471.

Individuals with disabilities may obtain this document in an alternative format (e.g., Braille, large print, audiotape, or computer diskette) on request to OCR's Customer Service Team at (202) 205–5557 or toll-free at 1–800–421–3481.

SUPPLEMENTARY INFORMATION: On May 5, 2000, we published a notice of proposed rulemaking (NPRM) in the **Federal Register** (65 FR 26464) proposing to amend the regulations governing nondiscrimination on the basis of race, color, national origin, sex, handicap, and age to conform with the CRRA.

We are amending these civil rights regulations to conform to provisions of the CRRA regarding the scope of coverage under civil rights statutes administered by the Department of Education (Department or ED). These statutes include Title VI of the Civil Rights Act of 1964, as amended, 42 U.S.C. 2000d, *et seq.* (Title VI), Title IX of the Education Amendments of 1972, 20 U.S.C. 1681 *et seq.*, (Title IX), Section 504 of the Rehabilitation Act of 1973, as amended, 29 U.S.C. 794 (Section 504), and the Age Discrimination Act of 1975, 42 U.S.C. 6101, *et seq.* (Age Discrimination Act). Title VI prohibits discrimination on the basis of race, color, and national origin in all programs or activities that receive Federal financial assistance; Title IX prohibits discrimination on the basis of sex in education programs or activities that receive Federal financial assistance; Section 504 prohibits discrimination on the basis of disability in all programs or activities that receive Federal financial assistance; and the Age Discrimination Act generally prohibits discrimination on the basis of age in all programs or activities that receive Federal financial assistance.

The conforming change amends each of these regulations to add a definition of ''program or activity'' or ''program'' that adopts the statutory definition of ''program or activity'' or ''program'' enacted as part of the CRRA. We believe that adding this statutory definition to the regulatory language is the best way to avoid confusion on the part of recipients, students, parents, and other interested parties about the scope of civil rights coverage. These amendments also conform in this regard to the final Title IX regulations for 24 Federal agencies published on August 30, 2000 (65 FR 52858). That common rule incorporated the statutory definitions of ''program or activity'' or ''program'' enacted as part of the CRRA.

The Department's civil rights regulations, when originally issued and implemented, were interpreted by the Department to mean that acceptance of Federal assistance by a school resulted in broad institutional coverage. In *Grove City College* v. *Bell* 465 U.S. 555 (1984) (*Grove City College*), the Supreme Court held, in a Title IX case, that if the Department provided student financial assistance to a college, the Department had jurisdiction to ensure Title IX compliance in the specific program receiving or benefiting from the assistance, in this case, the student financial aid program, but that the Federal student financial assistance would not provide jurisdiction over the entire institution. Following the Supreme Court's decision in *Grove City College,* the Department did change its interpretation, but not the language, of these regulations to be consistent with the Court's restrictive, ''program specific'' definition of ''program or activity'' or ''program.'' Since Title IX was patterned after Title VI, *Grove City College* significantly narrowed the scope of jurisdiction of Title VI and two other statutes based on it: the Age Discrimination Act and Section 504. See S. Rep. No. 100–64, 100th Cong., 1st Sess. 2–3, 11–16 (1987).

Then, in 1988, the CRRA was enacted to ''restore the prior consistent and long-standing executive branch interpretation and broad, institution-wide application of those laws as previously administered'' (20 U.S.C. 1687 note 1.) Congress enacted the CRRA in order to remedy what it perceived to be a serious narrowing by the Supreme Court of a longstanding administrative interpretation of the coverage of the regulations. At that time, the Department reinstated its broad interpretation to be consistent with the CRRA, again without changing the language of the regulations. It was and remains the Department's consistent interpretation that—with regard to the differences between the interpretation of the regulations given by the Supreme Court in *Grove City College* and the language of the CRRA—the CRRA, which took effect upon enactment, superseded the *Grove City College* decision and, therefore, the regulations must be read in conformity with the CRRA.

This interpretation reflects the understanding of Congress, as expressed in the legislative history of the CRRA, that the statutory definition of ''program or activity'' or ''program'' would take effect immediately, by its own force, without the need for Federal agencies to amend their existing regulations (S. Rep. No. 100–64 at 32). The legislative history also evidences congressional concern about the Department's immediate need to address complaints and findings of discrimination in federally assisted schools under the CRRA definition of ''program or activity,'' citing examples to demonstrate why the CRRA was ''urgently'' needed (S. Rep. No. 100–64 at 11–16).

These regulatory amendments eliminate an issue recently raised by the Third Circuit Court of Appeals in *Cureton* v. *NCAA,* 198 F. 3d 107 (1999) (*Cureton*). That court determined that, because the Department did not amend its Title VI regulations after the CRRA amended Title VI, application of the Department's Title VI regulations to disparate impact discrimination claims is ''program specific'' (*i.e.,* limited to specific programs in an institution affected by the Federal funds), rather than institution-wide (*i.e.,* applicable to all of the operations of the institution regardless of the use of the Federal

funds). The Department disagrees with the *Cureton* decision for the reasons described in this preamble. That decision would thwart clearly expressed congressional intent. In any event, the regulatory changes address the concerns raised by the Third Circuit in that the regulations track the statutory language and apply to both disparate impact discrimination and different treatment discrimination. (''Different treatment,'' i.e., intentional discrimination, refers to policies or practices that treat individuals differently based on their race, color, national origin, sex, disability, or age, as applicable. That different treatment is generally barred by the civil rights statutes and regulations. ''Disparate impact'' refers to criteria or methods of administration that have a significant disparate effect on individuals based on race, color, national origin, sex, disability, or age, as applicable. Those criteria or practices may constitute impermissible discrimination based on legal standards that include consideration of their educational necessity.)

The statutory definition, which is now incorporated into the regulations, addresses four broad categories of recipients: (1) State or local governmental entities. (2) Colleges, universities, other postsecondary educational institutions, public systems of higher education, local educational agencies (LEAs), systems of vocational education, and other school systems. (3) Private entities, such as corporations, partnerships, and sole proprietorships, including those whose principal business is providing education. (4) Entities that are established by a combination of two or more of the first three types of entities.

Under the first part of the definition, if State and local governmental entities receive financial assistance from the Department, the ''program or activity'' or ''program'' in which discrimination is prohibited includes all of the operations of any State or local department or agency to which the Federal assistance is extended. For example, if the Department provides financial assistance to a State educational agency, all of the agency's operations are subject to the nondiscrimination requirements of the regulations. In addition, ''program or activity'' or ''program'' also includes all of the operations of the entity of a State or local government that distributes the Federal assistance to another State or local governmental agency or department and all of the operations of the State or local governmental entity to which the financial assistance is extended. For example, if the Department provides financial assistance under Title I of the Elementary and Secondary Education Act to a State educational agency and the State educational agency distributes the financial assistance to a local educational agency, then all of the operations of the State educational agency are subject to the nondiscrimination requirements of the regulations, and all of the operations of the local educational agency are covered.

Under the second part of the definition of ''program or activity'' or ''program,'' if colleges, universities, other postsecondary institutions, public systems of higher education, local educational agencies, systems of vocational education, or other public or private schools or school systems receive financial assistance from the Department, all of their operations are subject to the nondiscrimination requirements of the regulations. For example, if a public school district receives funds from the Department under the Safe and Drug Free Schools and Communities Act, the entire school district is covered, not just the district's Safe and Drug Free Schools and Communities component. Additionally, for example, if a college or university receives student financial assistance from the Department, all of the operations of the college or university are covered, not solely the operations of the student financial assistance office. In addition, the legislative history of the CRRA made it clear that ''all of the operations'' was not limited to traditional educational operations, but was intended to include other benefits and services of the educational institution, such as faculty and student housing, campus shuttle bus services, and commercial activities, such as cafeterias and bookstores.

Under the third part of the definition, in the case of private entities not already listed under the second part of the definition, if the federally assisted entity or organization is principally engaged in the business of education (or health care, housing, social services, or parks and recreation), then the entire corporation, partnership, or other private organization or sole proprietorship is the covered ''program or activity'' or ''program.'' For example, if an individual elementary or secondary school that is neither part of an LEA nor part of an assisted private ''school system'' receives financial assistance from the Department, the school will be covered on an institution-wide basis under this portion of the definition of ''program or activity'' or ''program'' because it is an entity principally engaged in the business of providing education. For example, if a proprietary trade school receives student financial assistance from the Department, all of its operations are covered by the nondiscrimination requirements of the regulations.

Also under the third part of the definition, if a private entity is not principally engaged in the business of education (or health care, housing, social services, or parks and recreation) and the Department extends financial assistance to the private entity ''as a whole,'' all of the private entity's operations at all of its locations would be covered. If the Department were to extend general assistance, that is, assistance that is not designated for a particular purpose, to this type of corporation or other private entity, that would be considered financial assistance to the private entity ''as a whole.'' In other instances in which the geographically separate facility receives assistance under the third part of this definition, the coverage would be limited to the geographically separate facility that receives the assistance.

Under the fourth part of the definition, if an entity of a type not already covered by one of the first three parts of the definition is established by two or more of the entities listed under the first three parts of the definition, then all of the operations of that new entity are covered. Under the illustrative example in the legislative history, a public school district (an entity listed under the second part of the definition) and a private corporation (an entity listed under the third part of the definition) may establish a new company, which is a public-private partnership designed to provide remediation, training, and employment to high school students who are at risk of dropping out of school. If the new company applied for and received financial assistance from the Department, then, as an entity listed under the fourth part of the definition, all of its operations would be covered, even if the assistance from the Department were only to one division or component of the new company.

The regulatory changes also modify or delete some sections of the Department regulations that have become superfluous following the CRRA enactment, to conform with the CRRA definitions of ''program or activity'' or ''program.'' These regulatory changes do not change the requirements of the existing regulations. This is consistent with the approach in the Title IX common rule. As explained in the preamble to the NPRM for the Title IX common rule, that regulatory language in ED's Title IX regulations made

superfluous by the enactment of the CRRA was omitted in that rule (64 FR 58571).

The Department's Title IX regulations, promulgated in 1975 by the Department of Health, Education, and Welfare in 49 FR 24128 and adopted by the Department of Education upon its establishment in 1980, 45 FR 30955, defined ''recipient'' as an entity ''to whom Federal financial assistance is extended directly or through another recipient and that operates an education program or activity that receives or benefits from such assistance.'' At that time, the words ''or benefits from'' were necessary to clarify that *all* of the operations of a university or other educational institution that receives Federal funds—not just the particular programs receiving financial assistance—are covered by Title IX's nondiscrimination requirements. As previously discussed, this interpretation was rejected by the Supreme Court in 1984 in *Grove City College,* which held that Federal student financial aid established Title IX jurisdiction only over the financial aid program, not the entire institution. However, Congress' 1988 enactment of the CRRA counteracted this decision by defining ''program or activity'' and ''program'' to provide expressly that Title IX covers all educational programs of a recipient institution. Because of this statutory change, the words ''or benefits from'' are no longer necessary as a regulatory matter, and we deleted them. For the same reason, we deleted the words ''or benefits from'' from the Section 504 regulations. These deletions do not affect the reach of Title IX or Section 504.

The Department of Education's Title VI regulations, promulgated in 1964 by the Department of Health, Education, and Welfare in 29 FR 16298 and 29 FR 16988 and in 1965 in 30 FR 16988, and adopted by the Department of Education upon its establishment in 1980, (45 FR 30918), previously included an assurance requirement for institutions in § 100.4(d)(2) that created confusion with regard to the scope of ''program or activity'' and ''program'' under Title VI. One example is the previously referenced decision in *Cureton.* The regulatory provision previously stated, in part, ''The assurance * * * shall be applicable to the entire institution unless the applicant establishes, to the satisfaction of the responsible Department official, that the institution's practices in designated parts or programs of the institution will in no way affect its practices in the program of the institution for which Federal financial assistance is sought *–*–*.'' We have deleted that portion of the assurance that begins with the word ''unless'' to avoid any further confusion. As previously stated, it was appropriate to apply the CRRA statutory definition of ''program or activity'' to the regulations. For the same reasons, we have deleted portions of the illustrations in § 100.5(b) and (d), since they could create similar confusion. Specifically, in § 100.5(b), we deleted the language that states that, with regard to university graduate research, training, demonstration, or other grants, the prohibition extends to the entire university ''unless it satisfies the responsible Department official that practices with respect to other parts or programs of the university will not interfere, directly or indirectly, with fulfillment of the assurance required with respect to the graduate school.'' Similarly, in § 100.5(d), we deleted the language that states that ''In construction grants the assurances required will be adapted to the nature of the activities to be conducted in the facilities for construction of which the grants have been authorized by Congress.'' These deletions do not affect the reach of Title VI.

In addition, we deleted references to ''program'' or ''program or activity'' in the regulations that do not refer to the CRRA broad definition of that phrase, in order to eliminate potential confusion in the use of these terms and to continue the longstanding Department interpretation of the statutes and regulations. For example, in some instances, we deleted ''program'' or ''program or activity'' and substituted ''Federal financial assistance'' or ''aid, benefits, or services.'' In others, we changed ''programs *and* activities'' to ''programs or activities'' or ''program or activity'' to conform the regulations to the phrase used in the CRRA—when it is used in the broad manner defined in the CRRA. We did not modify the term ''activity'' when it appears separately from the phrase ''program or activity'' and is used in a manner unrelated to the CRRA phrase ''program or activity.''

These final regulations use the plural terms ''programs'' and ''programs or activities'' to refer generally to multiple programs or activities operated by multiple recipients. The singular terms ''program'' or ''program or activity'' are used in all other instances. We have chosen to use the singular in all of those cases because, under the CRRA and these regulations, virtually all of our recipients, such as institutions of higher education, will have only one ''program'' or ''program or activity'' encompassing all of the recipient's operations. In addition, since the use of the singular may be interpreted to encompass the plural, these regulations typically use the singular even though in certain cases we may fund a recipient that operates more than one program or activity that receives Federal financial assistance (such as when an individual recipient corporation has multiple plants, each of which is a separate program or activity). Similar regulations of other Federal agencies may use the plural form of these terms more frequently as they may tend to fund a greater number of recipients that operate more than one program or activity. Use of the singular or plural forms of these terms should not be interpreted to imply any legal difference in the intended scope of coverage.

It is important to note that these changes do not in any way alter the requirement of the CRRA that a proposed or effectuated fund termination be limited to the particular program or programs ''or part thereof'' that discriminates or, as appropriate, to all of the programs that are infected by the discriminatory practices. *See* S. Rep. No. 100–64, at 20, (''The [CRRA] defines 'program' in the same manner as 'program or activity,' and leaves intact the 'or part thereof' pinpointing language.'').

We replaced the current definition of ''program'' in 34 CFR 100.13 with the definition of ''program or activity'' and ''program.'' We added the definition of ''program or activity'' and ''program'' to 34 CFR 106.2. We added the definition of ''program or activity'' to 34 CFR 104.3 and to 34 CFR 110.3. Conforming changes to the nonregulatory guidance in Appendix B of Part 100, Appendix A of Part 104, and Appendix A of Part 106 will be published in the **Federal Register** in a separate notice. Nothing in these changes affects coverage under the Federal employment nondiscrimination statutes, including Title VII of the Civil Rights Act of 1964, Title I of the Americans with Disabilities Act, and the Age Discrimination in Employment Act.

Except for minor editorial and technical revisions, there are no differences between the NPRM and these final regulations.

Analysis of Comments and Changes

In the NPRM, we invited comments on the proposed regulations. We did not receive any comments. However, we have reviewed the regulations, in consultation with the Department of Justice, since publication of the NPRM and have made minor editorial and technical changes.

Executive Order 12866

We have reviewed these final regulations in accordance with Executive Order 12866. Under the terms of the order we have assessed the potential costs and benefits of this regulatory action.

The potential costs associated with the final regulations are those resulting from statutory requirements and those we have determined to be necessary for administering these programs effectively and efficiently.

In assessing the potential costs and benefits—both quantitative and qualitative—of these final regulations, we have determined that there probably will be no cost impacts because these final regulations merely clarify longstanding Department policy and do not change the Department's practices in addressing issues of discrimination.

We also have determined that this regulatory action would not unduly interfere with State, local, and tribal governments in the exercise of their governmental functions.

We summarized the potential costs and benefits of these final regulations in the preamble to the NPRM (65 FR 26467).

Paperwork Reduction Act of 1995

These regulations do not contain any information collection requirements.

Assessment of Educational Impact

In the NPRM we requested comments on whether the proposed regulations would require transmission of information that any other agency or authority of the United States gathers or makes available.

Based on the response to the NPRM and on our review, we have determined that these final regulations do not require transmission of information that any other agency or authority of the United States gathers or makes available.

Electronic Access to This Document

You may view this document, as well as all other Department of Education documents published in the **Federal Register**, in text or Adobe Portable Document Format (PDF) on the Internet at either of the following sites:

http://ocfo.ed.gov/fedreg.htm
http://www.ed.gov/news.html

After December 13, 2000, you may view a complete version of the revised regulations in text or PDF on the Internet at the following site: http://www.ed.gov/ocr/regs

To use the PDF you must have Adobe Acrobat Reader, which is available free at either of the first two sites listed in this section. If you have questions about using the PDF, call the U.S. Government Printing Office (GPO), toll free, at 1–888–293–6498; or in the Washington, DC, area at (202) 512–1530.

Note: The official version of this document is the document published in the **Federal Register**. Free Internet access to the official edition of the **Federal Register** and the Code of Federal Regulations is available on GPO Access at: http://www.access.gpo.gov/nara/index.html

List of Subjects

34 CFR Part 100

Administrative practice and procedure, Civil rights.

34 CFR Part 104

Civil Rights, Equal educational opportunity, Equal employment opportunity, Individuals with disabilities.

34 CFR Part 106

Education, Sex discrimination.

34 CFR Part 110

Administrative practice and procedure, Aged, Civil rights, Grant programs—education, Loan programs—education.

Dated: September 1, 2000.

Richard W. Riley,

Secretary of Education.

For the reasons discussed in the preamble, the Secretary amends parts 100, 104, 106, and 110 of title 34 of the Code of Federal Regulations as follows:

PART 100—NONDISCRIMINATION UNDER PROGRAMS RECEIVING FEDERAL ASSISTANCE THROUGH THE DEPARTMENT OF EDUCATION EFFECTUATION OF TITLE VI OF THE CIVIL RIGHTS ACT OF 1964

1. The authority citation for part 100 continues to read as follows:

Authority: Sec. 602, 78 Stat. 252; 42 U.S.C. 2000d–1, unless otherwise noted.

§ 100.2 [Amended]

2. Section 100.2 is amended by—

A. Removing the words ''program for which'' and adding, in their place, ''program to which'' in the introductory text;

B. Removing the words ''assisted programs and activities'' and adding, in their place, ''financial assistance'' in the introductory text;

C. Removing the words ''under any such program'' in paragraph (c); and

D. Removing the words '', under any such program'' in paragraph (d).

§ 100.3 [Amended]

3. Section 100.3(d) is amended by removing the words ''the benefits of a program'', and adding, in their place, the word ''benefits''.

§ 100.4 [Amended]

4. Section 100.4 is amended as follows—

A. Removing the words ''to carry out a program'' in the first sentence of paragraph (a)(1);

B. Removing the words ''except a program'' and adding, in their place, the words ''except an application'' in the first sentence of paragraph (a)(1);

C. Removing the words ''for each program'' and the words ''in the program'' in the fifth sentence of paragraph (a)(1);

D. Removing the words ''*State programs*'' and adding, in their place, the words ''*Federal financial assistance*'' in the heading of paragraph (b);

E. Removing the words ''to carry out a program involving'' and adding, in their place, the word ''for'' in the introductory text of paragraph (b); and

F. Revising paragraph (d)(2).

The revision reads as follows:

§ 100.4 Assurances required.

* * * * *

(d) * * *

(2) The assurance required with respect to an institution of higher education, hospital, or any other institution, insofar as the assurance relates to the institution's practices with respect to admission or other treatment of individuals as students, patients, or clients of the institution or to the opportunity to participate in the provision of services or other benefits to such individuals, shall be applicable to the entire institution.

* * * * *

5. Section 100.5 is amended as follows—

A. Revising paragraph (b); and

B. Removing the last sentence of paragraph (d).

The revision reads as follows:

§ 100.5 Illustrative application.

* * * * *

(b) In a research, training, demonstration, or other grant to a university for activities to be conducted in a graduate school, discrimination in the admission and treatment of students in the graduate school is prohibited, and the prohibition extends to the entire university.

* * * * *

§ 100.6 [Amended]

6. Section 100.6(b) is amended by removing the words ''of any program under'' in the last sentence and adding, in their place, the word ''in''.

§ 100.9 [Amended]

7. Section 100.9(e) is amended by removing the word ''programs'' in the first sentence and adding, in its place, the words ''Federal assistance statutes''.

8. Section 100.13 is amended by—

A. Removing ''for any program,'' and ''under any such program'' in paragraph (i);

B. Removing ''for the purpose of carrying out a program'' in paragraph (j);

C. Revising paragraph (g); and

D. Adding an authority citation following paragraph (g).

The revision and addition read as follows:

§ 100.13 Definitions.

* * * * *

(g) The term *program or activity* and the term *program* mean all of the operations of—

(1)(i) A department, agency, special purpose district, or other instrumentality of a State or of a local government; or

(ii) The entity of such State or local government that distributes such assistance and each such department or agency (and each other State or local government entity) to which the assistance is extended, in the case of assistance to a State or local government;

(2)(i) A college, university, or other postsecondary institution, or a public system of higher education; or

(ii) A local educational agency (as defined in 20 U.S.C. 8801), system of vocational education, or other school system;

(3)(i) An entire corporation, partnership, or other private organization, or an entire sole proprietorship—

(A) If assistance is extended to such corporation, partnership, private organization, or sole proprietorship as a whole; or

(B) Which is principally engaged in the business of providing education, health care, housing, social services, or parks and recreation; or

(ii) The entire plant or other comparable, geographically separate facility to which Federal financial assistance is extended, in the case of any other corporation, partnership, private organization, or sole proprietorship; or

(4) Any other entity that is established by two or more of the entities described in paragraph (g)(1), (2), or (3) of this section; any part of which is extended Federal financial assistance.

(Authority: 42 U.S.C. 2000d–4)

* * * * *

9. Appendix A to part 100 is amended by revising the heading of part 1 and the heading of part 2 to read as follows:

APPENDIX A TO PART 100—FEDERAL FINANCIAL ASSISTANCE TO WHICH THESE REGULATIONS APPLY

Part 1—Assistance Other Than Continuing Assistance to States

* * * * *

Part 2—Continuing Assistance to States

* * * * *

PART 104—NONDISCRIMINATION ON THE BASIS OF HANDICAP IN PROGRAMS OR ACTIVITIES RECEIVING FEDERAL FINANCIAL ASSISTANCE

10. The heading for part 104 is revised to read as set forth above.

11. The authority citation for part 104 continues to read as follows:

Authority: 20 U.S.C. 1405; 29 U.S.C. 794.

§ 104.2 [Amended]

12. Section 104.2 is amended by removing the word ''each'' before the words ''program or activity'' and adding, in its place, the word ''the''; and by removing the words ''or benefits from''.

13. Section 104.3 is amended by redesignating paragraphs (k) and (l) as paragraphs (l) and (m), respectively; adding a new paragraph (k); and adding an authority citation following paragraph (k) to read as follows:

§ 104.3 Definitions.

* * * * *

(k) *Program or activity* means all of the operations of—

(1)(i) A department, agency, special purpose district, or other instrumentality of a State or of a local government; or

(ii) The entity of such State or local government that distributes such assistance and each such department or agency (and each other State or local government entity) to which the assistance is extended, in the case of assistance to a State or local government;

(2)(i) A college, university, or other postsecondary institution, or a public system of higher education; or

(ii) A local educational agency (as defined in 20 U.S.C. 8801), system of vocational education, or other school system;

(3)(i) An entire corporation, partnership, or other private organization, or an entire sole proprietorship—

(A) If assistance is extended to such corporation, partnership, private organization, or sole proprietorship as a whole; or

(B) Which is principally engaged in the business of providing education, health care, housing, social services, or parks and recreation; or

(ii) The entire plant or other comparable, geographically separate facility to which Federal financial assistance is extended, in the case of any other corporation, partnership, private organization, or sole proprietorship; or

(4) Any other entity which is established by two or more of the entities described in paragraph (k)(1), (2), or (3) of this section; any part of which is extended Federal financial assistance.

(Authority: 29 U.S.C. 794(b))

* * * * *

§ 104.4 [Amended]

14. Section 104.4 is amended by—

A. Removing the words ''or benefits from'' in paragraphs (a) and (b)(5);

B. Removing the words ''programs or activities'' wherever they appear in paragraph (b)(3), and adding, in their place, ''aid, benefits, or services'';

C. Removing the words ''or benefiting from'' in paragraph (b)(6); and

D. In paragraph (c), removing the word ''*Programs*'' in the heading and adding, in its place, the words ''*Aid, benefits, or services*''; removing the words ''from the benefits of a program'' and adding, in their place, the words ''from aid, benefits, or services'', and removing the words ''from a program'' and adding, in their place, the words ''from aid, benefits, or services''.

§§ 104.4, 104.6, 104.12, 104.32, 104.33, 104.36 [Amended]

15. Remove the word ''program'' and add, in its place, the words ''program or activity'' in the following sections:

A. Section 104.4(b)(1)(v);

B. Section 104.4(b)(4);

C. Section 104.6(a)(3), wherever it appears;

D. Section 104.12(a), (c) introductory text, and (c)(1);

E. Section 104.32 introductory text;

F. Section 104.33(a); and

G. Section 104.36.

§ 104.5 [Amended]

16. Section 104.5(a) is amended in the first sentence by removing the words ''for a program or activity'' and by removing the words ''the program'' and adding, in their place, the words ''the program or activity''.

§ 104.8 [Amended]

17. Section 104.8(a) is amended by removing the words ''programs and

activities'' in the second sentence and adding, in their place, the words ''program or activity''.

§ 104.11 [Amended]

18. Section 104.11 is amended by—

A. Removing the words ''programs assisted'' and adding, in their place, the words ''programs or activities assisted'' in paragraph (a)(2);

B. Removing the word ''programs'' and revising ''apprenticeship'' to read ''apprenticeships'' in the last sentence of paragraph (a)(4); and

C. Removing the word ''programs'' and adding the words ''those that are'' before ''social or recreational'' in paragraph (b)(8).

Subpart C of Part 104—[Amended]

19. The heading of subpart C is amended by removing the word ''Program''.

§ 104.22 [Amended]

20. Section 104.22 is amended by—

A. Removing in paragraph (a) the words ''*Program accessibility*'' in the heading and adding, in their place, the word ''*Accessibility*'' and removing the words ''each program or activity to which this part applies so that the program or activity, when viewed in its entirety,'' in the first sentence and adding, in their place, the words ''its program or activity so that when each part is viewed in its entirety, it'';

B. Removing the words ''offer programs and activities to'' in the last sentence and adding, in their place, the word ''serve'' in paragraph (b); and

C. Removing the word ''program'' and adding ''in order to comply with paragraph (a) of this section'' after the word ''accessibility'' in paragraph (e)(3).

§ 104.31 [Amended]

21. Section 104.31 is amended by removing the words ''or benefit from'' wherever they appear; and by removing the words ''programs and activities'' and adding, in their place, the words ''programs or activities''.

§ 104.33 [Amended]

22. Section 104.33 is amended by—

A. Removing the words ''individualized education program'' and adding, in their place, the words ''Individualized Education Program'' in paragraph (b)(2);

B. Removing the words ''in or refer such person to a program other than the one that it operates'' and adding, in their place, the words ''or refer such a person for aid, benefits, or services other than those that it operates or provides'' in the first sentence in paragraph (b)(3);

C. Removing the words ''in or refers such person to a program not operated'' in the second sentence of paragraph (c)(1), and adding, in their place, the words ''or refers such person for aid, benefits, or services not operated or provided'';

D. Removing the words ''of the program'' in the second sentence of paragraph (c)(1) and adding, in their place, the words ''of the aid, benefits, or services'';

E. Removing the words ''in or refers such person to a program not operated'' in paragraph (c)(2), and adding, in their place, the words ''or refers such person for aid, benefits, or services not operated or provided'';

F. Removing the words ''from the program'' in paragraph (c)(2), and adding, in their place, the words ''from the aid, benefits, or services'';

G. Removing the words ''in the program'' in paragraph (c)(2), and adding, in their place, the words ''in the aid, benefits, or services'';

H. Removing the words ''If placement in a public or private residential program'' and adding, in their place, the words ''If a public or private residential placement'' in paragraph (c)(3); and removing the words ''the program'', and adding, in their place, the words ''the placement''; and

I. Removing the words ''such a program'' in the last sentence in paragraph (c)(4), and adding, in their place, the words ''a free appropriate public education''.

§ 104.35 [Amended]

23. Section 104.35(a) is amended by removing the words ''program shall'' and adding, in their place, the words ''program or activity shall''; removing the word ''a'' before the word ''regular''; and removing the word ''program'' before the word ''and''.

§ 104.37 [Amended]

24. Section 104.37(c)(1) is amended by removing the words ''programs and activities'' in the first sentence and adding, in their place, the words ''aid, benefits, or services''; and by removing the words ''in these activities'' in the last sentence.

25. Section 104.38 is revised to read as follows:

§ 104.38 Preschool and adult education.

A recipient to which this subpart applies that provides preschool education or day care or adult education may not, on the basis of handicap, exclude qualified handicapped persons and shall take into account the needs of such persons in determining the aid, benefits or services to be provided.

§ 104.39 [Amended]

26. Section 104.39 is amended by—

A. Removing the word ''programs'' in the section heading;

B. Removing the words ''operates a'' and adding, in their place, the word ''provides'' in paragraph (a);

C. Removing the word ''program'' after the word ''education'' in paragraph (a);

D. Removing the words ''from such program'' in paragraph (a);

E. Removing the words ''the recipient's program'' in paragraph (a), and adding, in their place, the words ''that recipient's program or activity''; and

F. Removing the words ''operates special education programs shall operate such programs'' in paragraph (c), and adding, in their place, the words ''provides special education shall do so''.

§ 104.41 [Amended]

27. Section 104.41 is amended by removing the words ''programs and activities'' wherever they appear in the section and adding, in their place, the words ''programs or activities''; and by removing the words ''or benefit from'' wherever they appear in the section.

§ 104.43 [Amended]

28. Sections 104.43 is amended by—

A. Removing the words ''program or activity'' in paragraph (a) and adding, in their place, the words ''aid, benefits, or services''; and

B. Removing the words ''programs and activities'' in paragraph (d), and adding, in their place, the words ''program or activity''.

§ 104.44 [Amended]

29. Section 104.44 is amended by—

A. Removing the words ''program of'' in the second sentence of paragraph (a);

B. Removing the words ''in its program'' in paragraph (c); and

C. Removing the words ''under the education program or activity operated by the recipient'' in paragraph (d)(1).

§ 104.47 [Amended]

30. Section 104.47 is amended by removing the words ''programs and activities'' in paragraph (a)(1), and adding, in their place, the words ''aid, benefits, or services''.

§ 104.51 [Amended]

31. Section 104.51 is amended by removing the words ''or benefit from'' wherever they appear in the section; and by removing the word ''and'' before the word ''activities'' and adding, in its place, the word ''or''.

§ 104.54 [Amended]

32. Section 104.54 is amended by adding the words ''that provides aid,

benefits or services'' after the words ''supervises a program or activity''.

PART 106—NONDISCRIMINATION ON THE BASIS OF SEX IN EDUCATION PROGRAMS OR ACTIVITIES RECEIVING FEDERAL FINANCIAL ASSISTANCE

33. The heading for part 106 is revised to read as set forth above.

33a. An authority citation for part 106 is added after the table of contents to read as follows:

Authority: 20 U.S.C. 1681 *et seq.*, unless otherwise noted.

34. Section 106.2 is amended by—

A. Redesignating paragraphs (h) through (r) as paragraphs (i) through (s), respectively;

B. Adding a new paragraph (h) and adding an authority citation following paragraph (h);

C. Amending redesignated paragraph (i) to remove the words ''or benefits from''; and

D. Amending redesignated paragraph (k) by removing ''(k), (l), (m), or (n)'' and adding, in its place, ''(l), (m), (n), or (o)''.

The addition reads as follows:

§ 106.2 Definitions.

* * * * *

(h) *Program or activity* and *program* means all of the operations of—

(1)(i) A department, agency, special purpose district, or other instrumentality of a State or local government; or

(ii) The entity of a State or local government that distributes such assistance and each such department or agency (and each other State or local government entity) to which the assistance is extended, in the case of assistance to a State or local government;

(2)(i) A college, university, or other postsecondary institution, or a public system of higher education; or

(ii) A local educational agency (as defined in 20 U.S.C. 8801), system of vocational education, or other school system;

(3)(i) An entire corporation, partnership, other private organization, or an entire sole proprietorship—

(A) If assistance is extended to such corporation, partnership, private organization, or sole proprietorship as a whole; or

(B) Which is principally engaged in the business of providing education, health care, housing, social services, or parks and recreation; or

(ii) The entire plant or other comparable, geographically separate facility to which Federal financial assistance is extended, in the case of any other corporation, partnership, private organization, or sole proprietorship; or

(4) Any other entity that is established by two or more of the entities described in paragraph (h)(1), (2), or (3) of this section; any part of which is extended Federal financial assistance.

(Authority: 20 U.S.C. 1687)

* * * * *

§ 106.4 [Amended]

35. Section 106.4 is amended by removing the words ''for any education program or activity''; and by removing the word ''each'' and adding, in its place, the word ''the'' in the first sentence of paragraph (a).

§ 106.6 [Amended]

36. Section 106.6 is amended by removing the words ''or benefits from'' in paragraph (c).

§ 106.9 [Amended]

37. Section 106.9 is amended by removing the words ''programs or activities'' and adding, in their place, the words ''program or activity''; and by removing the words ''education programs and activities'' and adding, in their place, the words ''the education program or activity'' in paragraph (a)(1).

§ 106.11 [Amended]

38. Section 106.11 is amended by removing the word ''each'' and adding, in its place, the word ''the''; and by removing the words ''or benefits from''.

§ 106.17 [Amended]

39. Section 106.17 is amended by removing the word ''programs'' and by removing the word ''emphasize'' and adding, in its place, the word ''emphasizes'' in paragraph (d).

Subparts D and E of Part 106—[Amended]

40. The headings of subparts D and E are amended by removing the word ''and'' and adding, in its place, the word ''or''.

§ 106.31 [Amended]

41. Section 106.31 is amended by—

A. Removing the word ''and'' in the section heading and adding, in its place, the word ''or'';

B. Removing the words ''or benefits from'' in the first sentence of paragraph (a); and

C. Removing the words ''*Programs not operated*'' in the heading of paragraph (d), and adding, in their place, the words ''*Aid, benefits or services not provided*''.

§ 106.40 [Amended]

42. Section 106.40 is amended by removing the words ''in the normal education program or activity'' in paragraph (b)(2); and by removing the words ''instructional program in the separate program'' in paragraph (b)(3) and adding, in their place, the words ''separate portion''.

§ 106.51 [Amended]

43. Section 106.51 is amended by removing the words ''or benefits from'' in paragraph (a)(1); and by removing the words ''social or recreational programs'' and adding, in their place, the words ''those that are social or recreational'' in paragraph (b)(9).

PART 110—NONDISCRIMINATION ON THE BASIS OF AGE IN PROGRAMS OR ACTIVITIES RECEIVING FEDERAL FINANCIAL ASSISTANCE

44. The heading for part 110 is revised to read as set forth above.

45. The authority citation for part 110 continues to read as follows:

Authority: 42 U.S.C. 6101 *et seq.*, unless otherwise noted.

§ 110.1 [Amended]

46. Remove the words ''programs and activities'' in the last sentence of § 110.1 and add, in their place, the words ''programs or activities''.

§ 110.2 [Amended]

47. The heading of § 110.2 is amended by adding the words ''or activities'' after the word ''programs''.

48. Section 110.3 is amended by adding in alphabetical order a new definition of ''Program or activity'' and adding an authority citation following the definition to read as follows:

§ 110.3 What definitions apply?

* * * * *

Program or activity means all of the operations of—

(a)(1) A department, agency, special purpose district, or other instrumentality of a State or local government; or

(2) The entity of a State or local government that distributes such assistance and each such department or agency (and each other State or local government entity) to which the assistance is extended, in the case of assistance to a State or local government;

(b)(1) A college, university, or other postsecondary institution, or a public system of higher education; or

(2) A local educational agency (as defined in 20 U.S.C. 8801), system of vocational education, or other school system;

(c)(1) An entire corporation, partnership, other private organization, or an entire sole proprietorship—

(i) If assistance is extended to such corporation, partnership, private organization, or sole proprietorship as a whole; or

(ii) Which is principally engaged in the business of providing education, health care, housing, social services, or parks and recreation; or

(2) The entire plant or other comparable, geographically separate facility to which Federal financial assistance is extended, in the case of any other corporation, partnership, private organization, or sole proprietorship; or

(d) Any other entity that is established by two or more of the entities described in paragraph (a), (b), or (c) of this section; any part of which is extended Federal financial assistance.

(Authority: 42 U.S.C. 6107)

* * * * *

§§ 110.16, 110.17 [Amended]

49. Remove the word ''program'' wherever it appears in § 110.16 and in § 110.17, and add, in its place, the words ''program or activity''.

§ 110.20 [Amended]

50. Section 110.20 is amended by removing the words ''programs or activities are'' in the first sentence and adding, in their place, the words ''program or activity is''.

§ 110.23 [Amended]

51. Section 110.23 is amended by removing the words ''for a program or activity'' and by adding the words ''or activity'' before the word ''will'' in paragraph (a).

§ 110.25 [Amended]

52. Section 110.25 is amended by removing the words ''and their applicability to specific programs'' in paragraph (b).

§ 110.33 [Amended]

53. Section 110.33 is amended by removing the word ''program'' in paragraph (a).

§ 110.35 [Amended]

54. Section 110.35(c)(2) is amended by removing the word ''Federal'' in the first sentence.

§ 110.37 [Amended]

55. Section 110.37(b)(2) is amended by removing the words ''program or activity'' and adding, in their place, ''Federal financial assistance''.

[FR Doc. 00–28599 Filed 11–9–00; 8:45 am]

BILLING CODE 4000–01–P

Federal Register

Monday,
November 13, 2000

Part V

The President

Notice of November 9, 2000—Continuation of Iran Emergency

Notice of November 9, 2000—Continuation of Emergency Regarding Weapons of Mass Destruction

Federal Register
Vol. 65, No. 219
Monday, November 13, 2000

Presidential Documents

Title 3—

The President

Notice of November 9, 2000

Continuation of Iran Emergency

On November 14, 1979, by Executive Order 12170, the President declared a national emergency to deal with the threat to the national security, foreign policy, and economy of the United States constituted by the situation in Iran. Since that time, notices of the continuation of this national emergency have been transmitted annually by the President to the Congress and published in the **Federal Register**. The most recent notice appeared in the **Federal Register** on November 5, 1999. Because our relations with Iran have not yet returned to normal, and the process of implementing the January 19, 1981, agreements with Iran is still underway, the national emergency declared on November 14, 1979, must continue in effect beyond November 14, 2000. Therefore, in accordance with section 202(d) of the National Emergencies Act (50 U.S.C. 1622(d)), I am continuing the national emergency with respect to Iran for 1 year. This notice shall be published in the **Federal Register** and transmitted to the Congress.

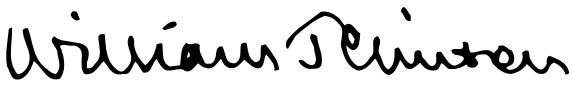

THE WHITE HOUSE,
November 9, 2000.

[FR Doc. 00–29242
Filed 11–9–00; 1:20 pm]
Billing code 3195–01–P

Presidential Documents

Notice of November 9, 2000

Continuation of Emergency Regarding Weapons of Mass Destruction

On November 14, 1994, by Executive Order 12938, I declared a national emergency with respect to the unusual and extraordinary threat to the national security, foreign policy, and economy of the United States posed by the proliferation of nuclear, biological, and chemical weapons (weapons of mass destruction) and the means of delivering such weapons. Because the proliferation of weapons of mass destruction and the means of delivering them continues to pose an unusual and extraordinary threat to the national security, foreign policy, and economy of the United States, the national emergency first declared on November 14, 1994, and extended on November 14, 1995, November 12, 1996, November 13, 1997, November 12, 1998, and November 10, 1999, must continue in effect beyond November 14, 2000. Therefore, in accordance with section 202(d) of the National Emergencies Act (50 U.S.C. 1622(d)), I am continuing the national emergency declared in Executive Order 12938.

This notice shall be published in the **Federal Register** and transmitted to the Congress.

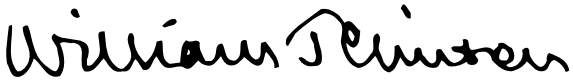

THE WHITE HOUSE,
November 9, 2000.

[FR Doc. 00–29243
Filed 11–09–00; 1:20 pm]
Billing code 3195–01–P

Reader Aids

Federal Register

Vol. 65, No. 219

Monday, November 13, 2000

CUSTOMER SERVICE AND INFORMATION

Federal Register/Code of Federal Regulations

General Information, indexes and other finding aids	**202–523–5227**
Laws	**523–5227**
Presidential Documents	
Executive orders and proclamations	**523–5227**
The United States Government Manual	**523–5227**
Other Services	
Electronic and on-line services (voice)	**523–4534**
Privacy Act Compilation	**523–3187**
Public Laws Update Service (numbers, dates, etc.)	**523–6641**
TTY for the deaf-and-hard-of-hearing	**523–5229**

ELECTRONIC RESEARCH

World Wide Web

Full text of the daily Federal Register, CFR and other publications:

http://www.access.gpo.gov/nara

Federal Register information and research tools, including Public Inspection List, indexes, and links to GPO Access:

http://www.nara.gov/fedreg

E-mail

PENS (Public Law Electronic Notification Service) is an E-mail service for notification of recently enacted Public Laws. To subscribe, send E-mail to

listserv@www.gsa.gov

with the text message:

subscribe PUBLAWS-L your name

Use listserv@www.gsa.gov only to subscribe or unsubscribe to PENS. We cannot respond to specific inquiries.

Reference questions. Send questions and comments about the Federal Register system to:

info@fedreg.nara.gov

The Federal Register staff cannot interpret specific documents or regulations.

FEDERAL REGISTER PAGES AND DATE, NOVEMBER

65253–65704 1
65705–66164 2
66165–66482 3
66483–66600 6
66601–66922 7
66923–67248 8
67249–67604 9
67605–68064 13

CFR PARTS AFFECTED DURING NOVEMBER

At the end of each month, the Office of the Federal Register publishes separately a List of CFR Sections Affected (LSA), which lists parts and sections affected by documents published since the revision date of each title.

3 CFR

Proclamations:
7370 67247
7371 67605

Executive Orders:
12170 (See Notice of November 9, 2000) 68059–68061
12866 (See EO 13175) 67249
12938 (See Notice of November 9, 2000) 68063
12988 (See EO 13175) 67249
13084 (Revoked by EO 13175).....67249
13067 (See Notice of October 31, 2000).....66163
13132 (See EO 13175) 67244
13174 65705
13175 67249

Administrative Orders:
Memorandums:
Memorandums of April 29, 1994 (See EO 13175) 67249
October 31, 2000.....66599
Notices:
October 31, 2000.....66163
November 9, 2000
Presidential Determinations:
No. 2001–03 of October 28, 2000 66843

5 CFR
1209 67607

7 CFR
52 66485
250 65707
251 65707
301 66487
718 65718
905 66601
929 65707
931 65253
944 66601
947 66489
966 66492
1411 65709
1421 65709
1424 67608
1427.....65709, 65718
1434 65709
1439 65709
1447 65709
1464 65718
1469 65718

Proposed Rules:
868 66189
923 67584
927 66935
929 65788
1930 65790
1944 65790

8 CFR
103 67616
214 67616

9 CFR
93 67617
94 65728
97 65729

Proposed Rules:
130 67657

10 CFR

Proposed Rules:
35 65793
430 66514

11 CFR

Proposed Rules:
100 66936
102 66936
104 66936

12 CFR

Proposed Rules:
3 66193
208 66193
225 66193
325 66193
516 66118
517 66118
543 66118
544.....66116, 66118
545 66118
550 66118
552 66116
555 66118
559 66118
560 66118
562 66118
563 66118
563b 66118
563f 66118
565 66118
567.....66118, 66193
574 66118
575 66118
584 66118

13 CFR

Proposed Rules:
124 66938

14 CFR
25 66165
39 .....65255, 65257, 65258, 65730, 65731, 66495, 66497,

66588, 66604, 66607, 66611, 66612, 66615, 66617, 66923, 66925, 66927
71 .....65731, 66168, 66169, 67253, 67254, 67255, 67256, 67257, 67624, 67626
97.....65732, 65734
Proposed Rules:
39 .....65798, 65800, 65803, 65805, 66197, 66657, 67311, 67315, 67663
71.....67318, 67664

15 CFR

6.....65260
740.....66169
774.....66169
Proposed Rules:
Ch. VII.....66514
285.....66659

16 CFR

2.....67258
4.....67258
305.....65736
Proposed Rules:
1026.....66515

17 CFR

1.....66618
230.....65736
240.....65736
Proposed Rules:
4.....66663

18 CFR

37.....65262
157.....65752
382.....65757

19 CFR

10 .....65769, 67260, 67261
12.....65769
18.....65769
24.....65769
111.....65769
113.....65769
114.....65769
125.....65769
134.....65769
145.....65769
162.....65769
171.....65769
172.....65769
Proposed Rules:
10.....66588

20 CFR

335.....66498
349.....66499
655.....67628

21 CFR

179.....67477
524.....66619
558 .....65270, 66620, 66621
600.....66621, 67477
606.....66621, 67477
808.....66636
820.....66636
Proposed Rules:
314.....66675
1313.....67796

24 CFR

888.....66887
Proposed Rules:
100.....67666
1003.....66592

26 CFR

1.....66500
Proposed Rules:
1.....67318

27 CFR

Proposed Rules:
9.....66518
55.....67669

28 CFR

Proposed Rules:
552.....67670

29 CFR

Proposed Rules:
1956.....67672

30 CFR

62.....66929
920.....66929
931.....65770
938.....66170
946.....65779

31 CFR

306.....66174
355.....65700
356.....66174
358.....65700
Proposed Rules:
205.....66671

32 CFR

736.....67628

33 CFR

100.....67264
117 .....66932, 66933, 67629
151.....67136
165 .....65782, 65783, 65786
Proposed Rules:
117.....66939
151.....65808
153.....65808
164.....66941
165.....65814

34 CFR

100.....68050
104.....68050
106.....68050
110.....68050
600.....65662
668.....65632, 65662
674.....65612, 65678
675.....65662
682 .....65616, 65678, 65632, 65678
685 .....65616, 65624, 65632, 65678
690.....65632, 65662
692.....65606
Proposed Rules:
75.....66200
350.....66200

36 CFR

217.....67514
219.....67514

37 CFR

1.....66502

38 CFR

17.....65906, 66636
21.....67265

39 CFR

Proposed Rules:
111.....65274

40 CFR

9.....67267
52.....66175, 67629
63.....67268
81.....67629
132.....66502, 67638
148.....67068
180.....66178, 67272
261.....67068
268.....67068
271.....67068
300.....65271, 67280
302.....67068
Proposed Rules:
52 .....65818, 66602, 67319, 67675
63.....66672
81.....67675
300.....67319
761.....65654

41 CFR

60–1.....68022
60–2.....68022
101–2.....66588

42 CFR

63.....66511
410.....65376
414.....65376
419.....67798
Proposed Rules:
412.....66303
413.....66303

44 CFR

65.....66181
Proposed Rules:
67.....66203

45 CFR

1628.....66637

46 CFR

30.....67136
150.....67136
151.....67136
153.....67136

46 CFR

25.....66941
27.....66941
Proposed Rules:
4.....65808

47 CFR

0.....66184, 66934
1.....66934
19.....66184
63.....67651
64.....66934
73 .....65271, 66643, 67282, 67283, 67289, 67652, 67653, 67654, 67655
74.....67289
76.....66643
90.....66643
Proposed Rules:
20.....66215
32.....67675
36.....67320
42.....66215
43.....67675
54.....67322
61.....66215
63.....66215
64.....66215, 67675
73 .....66950, 66951, 67331, 67675, 67688, 67689, 67690, 67691, 67692

48 CFR

Proposed Rules:
2.....65698, 66920
4.....65698
12.....66920
32.....66920
47.....66920
52.....66920

49 CFR

Proposed Rules:
571.....67693

50 CFR

18.....67304
300.....67305
600.....66655
648.....65787
660 .....65698, 66186, 66655, 67310
679 .....65698, 67305, 67310
Proposed Rules:
17 .....65287, 66808, 67345, 67335, 67343, 67796
224.....66221
226.....66221
600.....67708, 67709
648 .....65818, 66222, 66960
679.....66223

REMINDERS

The items in this list were editorially compiled as an aid to Federal Register users. Inclusion or exclusion from this list has no legal significance.

RULES GOING INTO EFFECT NOVEMBER 13, 2000

AGRICULTURE DEPARTMENT

Agricultural Marketing Service

Oranges, grapefruit, tangerines, and tangelos grown in Florida, and imported grapefruit; published 11-7-00

AGRICULTURE DEPARTMENT

Animal and Plant Health Inspection Service

Exportation and importation of animals and animal products:

Horses, ruminants, swine, and dogs; inspection and treatment for screwworm; published 11-13-00

Plant-related quarantine, foreign:

Artificially dwarfed plants; published 11-13-00

COMMERCE DEPARTMENT

National Oceanic and Atmospheric Administration

Fishery conservation and management:

Alaska; fisheries of Exclusive Economic Zone—

Bering Sea and Aleutian Islands groundfish; published 10-12-00

Bering Sea and Aleutian Islands groundfish; correction; published 10-31-00

Northeastern United States fisheries—

Dealer and vessel reporting requirements; published 10-13-00

DEFENSE DEPARTMENT

Navy Department

Property disposition

Correction; published 11-13-00

ENVIRONMENTAL PROTECTION AGENCY

Air quality implementation plans:

Preparation, adoption, and submittal—

Motor vehicle inspection/maintenance program requirements; onboard diagnostic check; published 10-30-00

Air quality implementation plans; approval and promulgation; various States:

California; published 9-13-00

FEDERAL COMMUNICATIONS COMMISSION

Practice and procedure:

Maximum forfeiture penalties; inflation adjustment; published 10-13-00

Radio services, special:

Private land mobile services—

1998 biennial regulatory review; published 10-13-00

Radio stations; table of assignments:

Pennsylvania and New York; published 10-18-00

Wisconsin and Minnesota; published 10-16-00

FEDERAL DEPOSIT INSURANCE CORPORATION

Consumer financial information; privacy requirements; published 6-1-00

FEDERAL RESERVE SYSTEM

Consumer financial information; privacy requirements; published 6-1-00

FEDERAL TRADE COMMISSION

Consumer financial information privacy; published 5-24-00

HOUSING AND URBAN DEVELOPMENT DEPARTMENT

Mortgage and loan insurance programs:

HUD-assisted multifamily rental projects; increased distributions to owners; published 10-13-00

JUSTICE DEPARTMENT

Immigration and Naturalization Service

Nonimmigrant classes:

Aliens coming temporarily to U.S. to perform agricultural labor or services; H-2A classification petitions; adjudication delegated to Labor Department; published 7-13-00

LABOR DEPARTMENT

Employment and Training Administration

Aliens:

Labor certification and petition process for temporary employment of nonimmigrant aliens in U.S. agriculture; Labor Department adjudication authority; published 7-13-00

MERIT SYSTEMS PROTECTION BOARD

Practice and procedure:

Personnel actions allegedly based on whistleblowing; appeals and stay requests; published 11-13-00

NATIONAL ARCHIVES AND RECORDS ADMINISTRATION

Public availability and use:

Reproduction services; fee schedule; published 10-13-00

NATIONAL CREDIT UNION ADMINISTRATION

Credit unions:

Consumer financial information; privacy requirements; published 5-18-00

Correction; published 5-30-00

PERSONNEL MANAGEMENT OFFICE

Senior Executive Service:

Performance appraisal regulations; published 10-13-00

SECURITIES AND EXCHANGE COMMISSION

Consumer financial information; privacy requirements (Regulation S-P); published 6-29-00

STATE DEPARTMENT

Visas; nonimmigrant documentation:

Labor Department designation to approve nonimmigrant petitions for temporary agricultural workers in lieu of Immigration and Naturalization Service; published 8-29-00

TRANSPORTATION DEPARTMENT

Federal Aviation Administration

Airworthiness directives:

Boeing; published 10-6-00

Empresa Brasileira de Aeronautica S.A.; published 10-6-00

McDonnell Douglas; published 10-6-00

TRANSPORTATION DEPARTMENT

National Highway Traffic Safety Administration

Fuel economy standards:

Passenger automobiles—

Low volume manufacturer exemptions; published 9-29-00

TREASURY DEPARTMENT

Comptroller of the Currency

Consumer financial information; privacy requirements; published 6-1-00

TREASURY DEPARTMENT

Thrift Supervision Office

Consumer financial information; privacy requirements; published 6-1-00

COMMENTS DUE NEXT WEEK

AGRICULTURE DEPARTMENT

Agricultural Marketing Service

Blueberries, cultivated; promotion, research, and information order; name change from blueberry promotion, research, and information order; comments due by 11-20-00; published 9-21-00

Pork Promotion, Research, and Consumer Information:

Program referendum; conduct procedures; comments due by 11-20-00; published 10-19-00

Walnuts grown in—

California; comments due by 11-22-00; published 10-23-00

AGRICULTURE DEPARTMENT

Animal and Plant Health Inspection Service

Animal welfare:

Inspection, licensing, and procurement of animals; comments due by 11-20-00; published 10-19-00

Exportation and importation of animals and animal products:

Hog cholera; disease status change—

East Anglia; comments due by 11-20-00; published 9-20-00

Interstate transportation of animals and animal products (quarantine):

Equine viral arteritis regulatory program for horses; comments due by 11-20-00; published 9-20-00

Swine; interstate movement within production system; comments due by 11-20-00; published 9-21-00

Plant-related quarantine, foreign:
Artificially dwarfed plants in growing media from China; comments due by 11-20-00; published 9-20-00

AGRICULTURE DEPARTMENT
Federal Crop Insurance Corporation
Crop insurance regulations:
Rice crop; comments due by 11-20-00; published 9-20-00

AGRICULTURE DEPARTMENT
Food and Nutrition Service
Child nutrition programs:
Special milk, summer food service, and child and adult care food programs, and free and reduced price meals and free milk in schools—
Children's eligibility information; disclosure; comments due by 11-22-00; published 7-25-00

AGRICULTURE DEPARTMENT
Food Safety and Inspection Service
Meat and poultry inspection:
Recall information; sharing with State and other Federal agencies; comments due by 11-20-00; published 9-19-00

COMMERCE DEPARTMENT
Economic Analysis Bureau
International services surveys:
BE-11; annual survey of U.S. direct investment abroad; comments due by 11-20-00; published 9-21-00
BE-577; direct transactions of U.S. reporter with foreign affiliate; comments due by 11-20-00; published 9-21-00
BE-82; annual survey of financial services transactions between U.S. financial services providers and unaffiliated foreign persons; comments due by 11-20-00; published 9-21-00
BE-93; annual survey of royalties, license fees, and other receipts and payments for intangible rights between U.S. and unaffiliated foreign persons; comments due by 11-20-00; published 9-21-00

COMMERCE DEPARTMENT
National Oceanic and Atmospheric Administration
Fishery conservation and management:
Alaska; fisheries of Exclusive Economic Zone—
North Pacific Groundfish Observer Program; extension; comments due by 11-20-00; published 11-3-00
Caribbean, Gulf, and South Atlantic fisheries—
Gulf of Mexico and South Atlantic coastal migratory pelagic resources; comments due by 11-24-00; published 10-25-00
West Coast States and Western Pacific fisheries—
Pacific Coast groundfish; comments due by 11-20-00; published 10-6-00
Pacific Coast groundfish; comments due by 11-21-00; published 9-22-00
Pacific Coast groundfish; comments due by 11-22-00; published 11-7-00
Pacific Coast groundfish; comments due by 11-24-00; published 11-9-00
Western Pacific pelagic fisheries; comments due by 11-20-00; published 10-19-00

DEFENSE DEPARTMENT
Acquisition regulations:
Overseas use of purchase card in contingency, humanitarian, or peacekeeping operations; comments due by 11-20-00; published 9-20-00

ENERGY DEPARTMENT
Acquisition regulations:
Contractor legal management requirements; comments due by 11-24-00; published 10-25-00

ENVIRONMENTAL PROTECTION AGENCY
Air quality implementation plans; approval and promulgation; various States:
Colorado and Utah; comments due by 11-24-00; published 10-24-00
Connecticut; comments due by 11-20-00; published 10-19-00
District of Columbia, Maryland, and Virginia; comments due by 11-20-00; published 11-9-00
Maryland and Virginia; comments due by 11-20-00; published 11-9-00
Virginia; comments due by 11-20-00; published 10-19-00
Pesticides; tolerances in food, animal feeds, and raw agricultural commodities:
Mefenoxam; comments due by 11-24-00; published 9-25-00
Water pollution control:
National Pollutant Discharge Elimination System—
South Dakota; sludge management (biosolids) program modification application; comments due by 11-20-00; published 10-5-00
Water supply:
National primary drinking water regulations—
Arsenic; maximum contaminant level; comments due by 11-20-00; published 10-20-00
Arsenic; maximum contaminant level; correction; comments due by 11-20-00; published 10-27-00

FEDERAL COMMUNICATIONS COMMISSION
Common carrier services:
Federal-State Joint Board on Universal Service—
Jurisdictional separations; recommended decision; comments due by 11-24-00; published 11-9-00
Wireless telecommunications services—
911 Act implementation; N11 codes and other abbreviated dialing arrangements use; compatibility with 911 emergency calling systems; comments due by 11-20-00; published 9-19-00
Compatibility with 911 and enhanced 911 emergency calling systems; comments due by 11-20-00; published 9-19-00
Digital television stations; table of assignments:
Arkansas; comments due by 11-24-00; published 10-5-00
Florida; comments due by 11-24-00; published 10-5-00
North Carolina; comments due by 11-24-00; published 10-5-00
South Dakota; comments due by 11-24-00; published 10-5-00
Radio stations; table of assignments:
South Dakota and Wyoming; comments due by 11-20-00; published 10-12-00

FEDERAL HOUSING FINANCE BOARD
Federal home loan bank system:
Capital structure requirements; comments due by 11-20-00; published 9-26-00

HEALTH AND HUMAN SERVICES DEPARTMENT
Food and Drug Administration
Food for human consumption:
Food labeling—
Foods processed with alternative nonthermal technologies; use of term ''fresh''; comments due by 11-20-00; published 9-20-00
Plant sterol/stanol esters and coronary heart disease; health claims; comments due by 11-22-00; published 9-8-00
Human drugs:
Cold, cough, allergy, bronchodilator, and antiasthmatic products (OTC)—
Antihistamine products; administrative record reopening; comments due by 11-24-00; published 8-25-00
Medical devices:
Physical medicine devices—
Ionotophoresis device; identification revision; comments due by 11-20-00; published 8-22-00

HEALTH AND HUMAN SERVICES DEPARTMENT
Inspector General Office, Health and Human Services Department
Medicare and State health care programs; fraud and abuse:
Revisions and technical corrections; comments due by 11-20-00; published 10-20-00

HEALTH AND HUMAN SERVICES DEPARTMENT
National Institutes of Health
Grants:
National Institutes of Health; research grant applications and research and development contract projects; scientific peer review; comments due by 11-20-00; published 9-21-00

INTERIOR DEPARTMENT
Fish and Wildlife Service
Endangered and threatened species:
Critical habitat designations—
California red-legged frog; comments due by 11-20-00; published 10-19-00
Mexican spotted owl; comments due by 11-20-00; published 10-20-00
Peninsular bighorn sheep; comments due by 11-20-00; published 10-19-00
Riverside fairy shrimp; comments due by 11-20-00; published 9-21-00
Wintering piping plovers; comments due by 11-24-00; published 10-27-00
Migratory bird hunting:
Tin shot; temporary approval as nontoxic for waterfowl and coots hunting; comments due by 11-24-00; published 9-25-00

INTERIOR DEPARTMENT
Surface Mining Reclamation and Enforcement Office
Permanent program and abandoned mine land reclamation plan submissions:
New Mexico; comments due by 11-22-00; published 10-23-00

JUSTICE DEPARTMENT
Drug Enforcement Administration
Records, reports, and exports of listed chemicals:
Red phosphorus, white phosphorus, and hypophosphorous acid (and its salts); comments due by 11-24-00; published 9-25-00

JUSTICE DEPARTMENT
Prisons Bureau
Inmate control, custody, care, etc.:
Drug abuse treatment programs; participation requirements; comments due by 11-20-00; published 9-20-00
Inmate drug testing programs; comments due by 11-20-00; published 9-21-00

NATIONAL AERONAUTICS AND SPACE ADMINISTRATION
Acquisition regulations:
Priorities and allocations system; comments due by 11-20-00; published 9-20-00

NUCLEAR REGULATORY COMMISSION
Radiation protection standards:
New dosimetry technology; licensee use of personnel dosimeters requiring processing by accredited processors; comments due by 11-24-00; published 10-24-00

TENNESSEE VALLEY AUTHORITY
Tennessee River system; construction approval and regulation of structures:
Residential related use on TVA-controlled residential access shoreline and TVA flowage easement shoreline; comments due by 11-20-00; published 9-20-00

TRANSPORTATION DEPARTMENT
Federal Aviation Administration
Airworthiness directives:
Agusta S.p.A.; comments due by 11-21-00; published 9-22-00
Airbus; comments due by 11-24-00; published 10-25-00
Boeing; comments due by 11-20-00; published 10-5-00
British Aerospace; comments due by 11-20-00; published 10-20-00
Eurocopter Deutschland GMBH; comments due by 11-20-00; published 9-20-00
Industrie Aeronautiche e Meccaniche; comments due by 11-24-00; published 10-19-00
McDonnell Douglas; comments due by 11-20-00; published 10-4-00
Pratt & Whitney; comments due by 11-20-00; published 9-20-00
Airworthiness standards:
Special conditions—
Canadair Model CL-600-2B19 series airplanes; comments due by 11-22-00; published 10-23-00
Class E airspace; comments due by 11-20-00; published 9-18-00

TREASURY DEPARTMENT
Comptroller of the Currency
Community bank-focused regulation review; lending limits pilot program; comments due by 11-21-00; published 9-22-00

TREASURY DEPARTMENT
Privacy Act; implementation; comments due by 11-24-00; published 10-25-00

LIST OF PUBLIC LAWS

This is a continuing list of public bills from the current session of Congress which have become Federal laws. It may be used in conjunction with ''P L U S'' (Public Laws Update Service) on 202–523–6641. This list is also available online at http://www.nara.gov/fedreg.

The text of laws is not published in the **Federal Register** but may be ordered in ''slip law'' (individual pamphlet) form from the Superintendent of Documents, U.S. Government Printing Office, Washington, DC 20402 (phone, 202–512–1808). The text will also be made available on the Internet from GPO Access at http://www.access.gpo.gov/nara/index.html. Some laws may not yet be available.

H.R. 4811/P.L. 106–429

Making appropriations for foreign operations, export financing, and related programs for the fiscal year ending September 30, 2001, and for other purposes. (Nov. 6, 2000; 114 Stat. 1900)

H.R. 5178/P.L. 106–430

Needlestick Safety and Prevention Act (Nov. 6, 2000; 114 Stat. 1901)

Last List November 7, 2000

Public Laws Electronic Notification Service (PENS)

PENS is a free electronic mail notification service of newly enacted public laws. To subscribe, go to http://hydra.gsa.gov/archives/publaws-l.html or send E-mail to **listserv@listserv.gsa.gov** with the following text message:

SUBSCRIBE PUBLAWS-L Your Name.

Note: This service is strictly for E-mail notification of new laws. The text of laws is not available through this service. **PENS** cannot respond to specific inquiries sent to this address.

CFR CHECKLIST

This checklist, prepared by the Office of the Federal Register, is published weekly. It is arranged in the order of CFR titles, stock numbers, prices, and revision dates.

An asterisk (*) precedes each entry that has been issued since last week and which is now available for sale at the Government Printing Office.

A checklist of current CFR volumes comprising a complete CFR set, also appears in the latest issue of the LSA (List of CFR Sections Affected), which is revised monthly.

The CFR is available free on-line through the Government Printing Office's GPO Access Service at http://www.access.gpo.gov/nara/cfr/index.html. For information about GPO Access call the GPO User Support Team at 1-888-293-6498 (toll free) or 202-512-1530.

The annual rate for subscription to all revised paper volumes is $951.00 domestic, $237.75 additional for foreign mailing.

Mail orders to the Superintendent of Documents, Attn: New Orders, P.O. Box 371954, Pittsburgh, PA 15250–7954. All orders must be accompanied by remittance (check, money order, GPO Deposit Account, VISA, Master Card, or Discover). Charge orders may be telephoned to the GPO Order Desk, Monday through Friday, at **(202) 512–1800** from 8:00 a.m. to 4:00 p.m. eastern time, or FAX your charge orders to **(202) 512-2250**.

Title	Stock Number	Price	Revision Date
1, 2 (2 Reserved)	(869–038–00001–3)	6.50	Apr. 1, 2000
3 (1997 Compilation and Parts 100 and 101)	(869–042–00002–1)	22.00	[1] Jan. 1, 2000
4	(869–042–00003–0)	8.50	Jan. 1, 2000
5 Parts:			
1–699	(869–042–00004–8)	43.00	Jan. 1, 2000
700–1199	(869–042–00005–6)	31.00	Jan. 1, 2000
1200–End, 6 (6 Reserved)	(869–042–00006–4)	48.00	Jan. 1, 2000
7 Parts:			
1–26	(869–042–00007–2)	28.00	Jan. 1, 2000
27–52	(869–042–00008–1)	35.00	Jan. 1, 2000
53–209	(869–042–00009–9)	22.00	Jan. 1, 2000
210–299	(869–042–00010–2)	54.00	Jan. 1, 2000
300–399	(869–042–00011–1)	29.00	Jan. 1, 2000
400–699	(869–042–00012–9)	41.00	Jan. 1, 2000
700–899	(869–042–00013–7)	37.00	Jan. 1, 2000
900–999	(869–042–00014–5)	46.00	Jan. 1, 2000
1000–1199	(869–042–00015–3)	18.00	Jan. 1, 2000
1200–1599	(869–042–00016–1)	44.00	Jan. 1, 2000
1600–1899	(869–042–00017–0)	61.00	Jan. 1, 2000
1900–1939	(869–042–00018–8)	21.00	Jan. 1, 2000
1940–1949	(869–042–00019–6)	37.00	Jan. 1, 2000
1950–1999	(869–042–00020–0)	38.00	Jan. 1, 2000
2000–End	(869–042–00021–8)	31.00	Jan. 1, 2000
8	(869–042–00022–6)	41.00	Jan. 1, 2000
9 Parts:			
1–199	(869–042–00023–4)	46.00	Jan. 1, 2000
200–End	(869–042–00024–2)	44.00	Jan. 1, 2000
10 Parts:			
1–50	(869–042–00025–1)	46.00	Jan. 1, 2000
51–199	(869–042–00026–9)	38.00	Jan. 1, 2000
200–499	(869–042–00027–7)	38.00	Jan. 1, 2000
500–End	(869–042–00028–5)	48.00	Jan. 1, 2000
11	(869–042–00029–3)	23.00	Jan. 1, 2000
12 Parts:			
1–199	(869–042–00030–7)	18.00	Jan. 1, 2000
200–219	(869–042–00031–5)	22.00	Jan. 1, 2000
220–299	(869–042–00032–3)	45.00	Jan. 1, 2000
300–499	(869–042–00033–1)	29.00	Jan. 1, 2000
500–599	(869–042–00034–0)	26.00	Jan. 1, 2000
600–End	(869–042–00035–8)	53.00	Jan. 1, 2000
13	(869–042–00036–6)	35.00	Jan. 1, 2000
14 Parts:			
1–59	(869–042–00037–4)	58.00	Jan. 1, 2000
60–139	(869–042–00038–2)	46.00	Jan. 1, 2000
140–199	(869–038–00039–1)	17.00	[4] Jan. 1, 2000
200–1199	(869–042–00040–4)	29.00	Jan. 1, 2000
1200–End	(869–042–00041–2)	25.00	Jan. 1, 2000
15 Parts:			
0–299	(869–042–00042–1)	28.00	Jan. 1, 2000
300–799	(869–042–00043–9)	45.00	Jan. 1, 2000
800–End	(869–042–00044–7)	26.00	Jan. 1, 2000
16 Parts:			
0–999	(869–042–00045–5)	33.00	Jan. 1, 2000
1000–End	(869–042–00046–3)	43.00	Jan. 1, 2000
17 Parts:			
1–199	(869–042–00048–0)	32.00	Apr. 1, 2000
200–239	(869–042–00049–8)	38.00	Apr. 1, 2000
240–End	(869–042–00050–1)	49.00	Apr. 1, 2000
18 Parts:			
1–399	(869–042–00051–0)	54.00	Apr. 1, 2000
400–End	(869–042–00052–8)	15.00	Apr. 1, 2000
19 Parts:			
1–140	(869–042–00053–6)	40.00	Apr. 1, 2000
141–199	(869–042–00054–4)	40.00	Apr. 1, 2000
200–End	(869–042–00055–2)	20.00	Apr. 1, 2000
20 Parts:			
1–399	(869–042–00056–1)	33.00	Apr. 1, 2000
400–499	(869–042–00057–9)	56.00	Apr. 1, 2000
500–End	(869–042–00058–7)	58.00	Apr. 1, 2000
21 Parts:			
1–99	(869–042–00059–5)	26.00	Apr. 1, 2000
100–169	(869–042–00060–9)	30.00	Apr. 1, 2000
170–199	(869–042–00061–7)	29.00	Apr. 1, 2000
200–299	(869–042–00062–5)	13.00	Apr. 1, 2000
300–499	(869–042–00063–3)	20.00	Apr. 1, 2000
500–599	(869–042–00064–1)	31.00	Apr. 1, 2000
600–799	(869–038–00065–0)	10.00	Apr. 1, 2000
800–1299	(869–042–00066–8)	38.00	Apr. 1, 2000
1300–End	(869–042–00067–6)	15.00	Apr. 1, 2000
22 Parts:			
1–299	(869–042–00068–4)	54.00	Apr. 1, 2000
300–End	(869–042–00069–2)	31.00	Apr. 1, 2000
23	(869–042–00070–6)	29.00	Apr. 1, 2000
24 Parts:			
0–199	(869–042–00071–4)	40.00	Apr. 1, 2000
200–499	(869–042–00072–2)	37.00	Apr. 1, 2000
500–699	(869–042–00073–1)	20.00	Apr. 1, 2000
700–1699	(869–042–00074–9)	46.00	Apr. 1, 2000
1700–End	(869–042–00075–7)	18.00	[5] Apr. 1, 2000
25	(869–042–00076–5)	52.00	Apr. 1, 2000
26 Parts:			
§§ 1.0-1–1.60	(869–042–00077–3)	31.00	Apr. 1, 2000
§§ 1.61–1.169	(869–042–00078–1)	56.00	Apr. 1, 2000
§§ 1.170–1.300	(869–042–00079–0)	38.00	Apr. 1, 2000
§§ 1.301–1.400	(869–042–00080–3)	29.00	Apr. 1, 2000
§§ 1.401–1.440	(869–042–00081–1)	47.00	Apr. 1, 2000
§§ 1.441-1.500	(869-042-00082-0)	36.00	Apr. 1, 2000
§§ 1.501–1.640	(869–042–00083–8)	32.00	Apr. 1, 2000
§§ 1.641–1.850	(869–042–00084–6)	41.00	Apr. 1, 2000
§§ 1.851–1.907	(869–042–00085–4)	43.00	Apr. 1, 2000
§§ 1.908–1.1000	(869–042–00086–2)	41.00	Apr. 1, 2000
§§ 1.1001–1.1400	(869–042–00087–1)	45.00	Apr. 1, 2000
§§ 1.1401–End	(869–042–00088–9)	66.00	Apr. 1, 2000
2–29	(869–042–00089–7)	45.00	Apr. 1, 2000
30–39	(869–042–00090–1)	31.00	Apr. 1, 2000
40–49	(869–042–00091–9)	18.00	Apr. 1, 2000
50–299	(869–042–00092–7)	23.00	Apr. 1, 2000
300–499	(869–042–00093–5)	43.00	Apr. 1, 2000
500–599	(869–042–00094–3)	12.00	Apr. 1, 2000
600–End	(869–042–00095–1)	12.00	Apr. 1, 2000
27 Parts:			
1–199	(869–042–00096–0)	59.00	Apr. 1, 2000

Title	Stock Number	Price	Revision Date
200–End	(869–042–00097–8)	18.00	Apr. 1, 2000
28 Parts:			
0-42	(869–042–00098–6)	43.00	July 1, 2000
43-end	(869-042-00099-4)	36.00	July 1, 2000
29 Parts:			
0–99	(869–042–00100–1)	33.00	July 1, 2000
100–499	(869–042–00101–0)	14.00	July 1, 2000
500–899	(869–042–00102–8)	47.00	July 1, 2000
900–1899	(869–042–00103–6)	24.00	July 1, 2000
1900–1910 (§§ 1900 to 1910.999)	(869–042–00104–4)	46.00	[6]July 1, 2000
1910 (§§ 1910.1000 to end)	(869–042–00105–2)	28.00	[6]July 1, 2000
1911–1925	(869–042–00106–1)	20.00	July 1, 2000
1926	(869–042–00107–9)	30.00	[6]July 1, 2000
1927–End	(869–042–00108–7)	49.00	July 1, 2000
30 Parts:			
1–199	(869–038–00109–8)	35.00	July 1, 1999
200–699	(869–042–00110–9)	33.00	July 1, 2000
700–End	(869–042–00111–7)	39.00	July 1, 2000
31 Parts:			
0–199	(869–042–00112–5)	23.00	July 1, 2000
200–End	(869–042–00113–3)	53.00	July 1, 2000
32 Parts:			
1–39, Vol. I		15.00	[2] July 1, 1984
1–39, Vol. II		19.00	[2] July 1, 1984
1–39, Vol. III		18.00	[2] July 1, 1984
1–190	(869–038–00114–4)	46.00	July 1, 1999
191–399	(869–042–00115–0)	62.00	July 1, 2000
400–629	(869–042–00116–8)	35.00	July 1, 2000
630–699	(869–042–00117–6)	25.00	July 1, 2000
700–799	(869–042–00118–4)	31.00	July 1, 2000
800–End	(869–042–00119–2)	32.00	July 1, 2000
33 Parts:			
1–124	(869–042–00120–6)	35.00	July 1, 2000
125–199	(869–042–00121–4)	45.00	July 1, 2000
200–End	(869–042–00122–5)	36.00	July 1, 2000
34 Parts:			
1–299	(869–042–00123–1)	31.00	July 1, 2000
300–399	(869–042–00124–9)	28.00	July 1, 2000
400–End	(869–042–00125–7)	54.00	July 1, 2000
35	(869–042–00126–5)	10.00	July 1, 2000
36 Parts			
1–199	(869–042–00127–3)	24.00	July 1, 2000
200–299	(869–042–00128–1)	24.00	July 1, 2000
300–End	(869–038–00129–2)	38.00	July 1, 1999
37	(869–038–00130–6)	29.00	July 1, 1999
38 Parts:			
0–17	(869–042–00131–1)	40.00	July 1, 2000
18–End	(869–042–00132–0)	47.00	July 1, 2000
39	(869–042–00133–8)	28.00	July 1, 2000
40 Parts:			
1–49	(869–042–00134–6)	37.00	July 1, 2000
50–51	(869–042–00135–4)	28.00	July 1, 2000
52 (52.01–52.1018)	(869–042–00136–2)	36.00	July 1, 2000
52 (52.1019–End)	(869–042–00137–1)	44.00	July 1, 2000
53–59	(869–038–00138–1)	19.00	July 1, 1999
60	(869–042–00139–7)	66.00	July 1, 2000
61–62	(869–038–00140–3)	19.00	July 1, 1999
63 (63.1–63.1119)	(869–042–00141–9)	66.00	July 1, 2000
63 (63.1200–End)	(869–042–00142–7)	49.00	July 1, 2000
64–71	(869–042–00143–5)	12.00	July 1, 2000
72–80	(869–042–00144–3)	47.00	July 1, 2000
81–85	(869–038–00145–4)	33.00	July 1, 1999
86	(869–042–00146–0)	66.00	July 1, 2000
87-135	(869–042–00146–8)	66.00	July 1, 2000
136–149	(869–038–00148–9)	40.00	July 1, 1999
150–189	(869–038–00149–7)	35.00	July 1, 1999
190–259	(869–042–00150–8)	25.00	July 1, 2000
260–265	(869–042–00151–6)	36.00	July 1, 2000
266–299	(869–042–00152–4)	35.00	July 1, 2000
300–399	(869–038–00153–5)	26.00	July 1, 1999
400–424	(869–042–00154–1)	37.00	July 1, 2000
425–699	(869–042–00155–9)	48.00	July 1, 2000
700–789	(869–038–00156–0)	42.00	July 1, 1999
790–End	(869–042–00157–5)	23.00	[6]July 1, 2000
41 Chapters:			
1, 1–1 to 1–10		13.00	[3] July 1, 1984
1, 1–11 to Appendix, 2 (2 Reserved)		13.00	[3] July 1, 1984
3–6		14.00	[3] July 1, 1984
7		6.00	[3] July 1, 1984
8		4.50	[3] July 1, 1984
9		13.00	[3] July 1, 1984
10–17		9.50	[3] July 1, 1984
18, Vol. I, Parts 1–5		13.00	[3] July 1, 1984
18, Vol. II, Parts 6–19		13.00	[3] July 1, 1984
18, Vol. III, Parts 20–52		13.00	[3] July 1, 1984
19–100		13.00	[3] July 1, 1984
1–100	(869–042–00158–3)	15.00	July 1, 2000
101	(869–038–00159–4)	39.00	July 1, 1999
102–200	(869–042–00160–5)	21.00	July 1, 2000
201–End	(869–042–00161–3)	16.00	July 1, 2000
42 Parts:			
1–399	(869–038–00162–4)	36.00	Oct. 1, 1999
400–429	(869–038–00163–2)	44.00	Oct. 1, 1999
430–End	(869–038–00164–1)	54.00	Oct. 1, 1999
43 Parts:			
1–999	(869–038–00165–9)	32.00	Oct. 1, 1999
1000–end	(869–038–00166–7)	47.00	Oct. 1, 1999
44	(869–038–00167–5)	28.00	Oct. 1, 1999
45 Parts:			
1–199	(869–038–00168–3)	33.00	Oct. 1, 1999
200–499	(869–038–00169–1)	16.00	Oct. 1, 1999
500–1199	(869–038–00170–5)	30.00	Oct. 1, 1999
1200–End	(869–038–00171–3)	40.00	Oct. 1, 1999
46 Parts:			
1–40	(869–038–00172–1)	27.00	Oct. 1, 1999
41–69	(869–038–00173–0)	23.00	Oct. 1, 1999
70–89	(869–038–00174–8)	8.00	Oct. 1, 1999
90–139	(869–038–00175–6)	26.00	Oct. 1, 1999
140–155	(869–038–00176–4)	15.00	Oct. 1, 1999
156–165	(869–038–00177–2)	21.00	Oct. 1, 1999
166–199	(869–038–00178–1)	27.00	Oct. 1, 1999
200–499	(869–038–00179–9)	23.00	Oct. 1, 1999
500–End	(869–038–00180–2)	15.00	Oct. 1, 1999
47 Parts:			
0–19	(869–038–00181–1)	39.00	Oct. 1, 1999
20–39	(869–038–00182–9)	26.00	Oct. 1, 1999
40–69	(869–038–00183–7)	26.00	Oct. 1, 1999
70–79	(869–038–00184–5)	39.00	Oct. 1, 1999
80–End	(869–038–00185–3)	40.00	Oct. 1, 1999
48 Chapters:			
1 (Parts 1–51)	(869–038–00186–1)	55.00	Oct. 1, 1999
1 (Parts 52–99)	(869–038–00187–0)	30.00	Oct. 1, 1999
2 (Parts 201–299)	(869–038–00188–8)	36.00	Oct. 1, 1999
3–6	(869–038–00189–6)	27.00	Oct. 1, 1999
7–14	(869–038–00190–0)	35.00	Oct. 1, 1999
15–28	(869–038–00191–8)	36.00	Oct. 1, 1999
29–End	(869–038–00192–6)	25.00	Oct. 1, 1999
49 Parts:			
1–99	(869–038–00193–4)	34.00	Oct. 1, 1999
100–185	(869–038–00194–2)	53.00	Oct. 1, 1999
186–199	(869–038–00195–1)	13.00	Oct. 1, 1999
200–399	(869–038–00196–9)	53.00	Oct. 1, 1999
400–999	(869–038–00197–7)	57.00	Oct. 1, 1999
1000–1199	(869–038–00198–5)	17.00	Oct. 1, 1999
1200–End	(869–038–00199–3)	14.00	Oct. 1, 1999
50 Parts:			
1–199	(869–038–00200–1)	43.00	Oct. 1, 1999
200–599	(869–038–00201–9)	22.00	Oct. 1, 1999

Title	Stock Number	Price	Revision Date
600–End	(869–038–00202–7)	37.00	Oct. 1, 1999
CFR Index and Findings Aids	(869–042–00047–1)	53.00	Jan. 1, 2000
Complete 1999 CFR set		951.00	1999
Microfiche CFR Edition:			
Subscription (mailed as issued)		290.00	1999
Individual copies		1.00	1999
Complete set (one-time mailing)		247.00	1997
Complete set (one-time mailing)		264.00	1996

[1] Because Title 3 is an annual compilation, this volume and all previous volumes should be retained as a permanent reference source.

[2] The July 1, 1985 edition of 32 CFR Parts 1–189 contains a note only for Parts 1–39 inclusive. For the full text of the Defense Acquisition Regulations in Parts 1–39, consult the three CFR volumes issued as of July 1, 1984, containing those parts.

[3] The July 1, 1985 edition of 41 CFR Chapters 1–100 contains a note only for Chapters 1 to 49 inclusive. For the full text of procurement regulations in Chapters 1 to 49, consult the eleven CFR volumes issued as of July 1, 1984 containing those chapters.

[4] No amendments to this volume were promulgated during the period January 1, 1999, through January 1, 2000. The CFR volume issued as of January 1, 1999 should be retained.

[5] No amendments to this volume were promulgated during the period April 1, 1999, through April 1, 2000. The CFR volume issued as of April 1, 1999 should be retained.

[6] No amendments to this volume were promulgated during the period July 1, 1999, through July 1, 2000. The CFR volume issued as of July 1, 1999 should be retained..